DIST	COUNTY	ROUTE	POST MILES TOTAL PROJECT	SHEET No.	TOTAL SHEETS
08	Riv,SBd	91,215	21.5/21.7, 43.2/45.2,0.0/5.1	1701	1743

REGISTERED CIVIL ENGINEER — DATE: 4-06-12

4-16-12
PLANS APPROVAL DATE

REGISTERED PROFESSIONAL ENGINEER — LARRY WU No. C57035 Exp. 6-30-13 CIVIL — STATE OF CALIFORNIA

The State of California or its officers or agents shall not be responsible for the accuracy or completeness of electronic copies of this plan sheet.

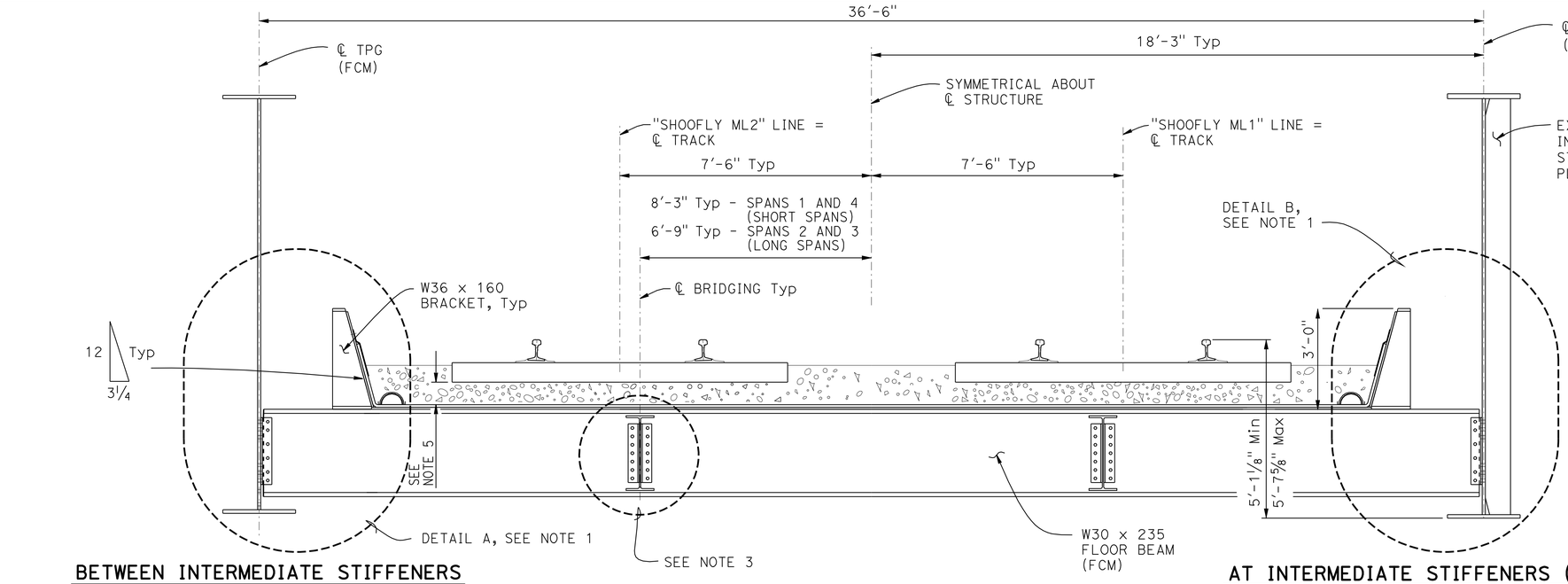

BETWEEN INTERMEDIATE STIFFENERS

AT INTERMEDIATE STIFFENERS (NO KNEE BRACE)

NOTES:

1. FOR DETAILS A AND B, SEE "GIRDER DETAILS NO. 1" SHEET.
2. FOR DETAIL C, SEE "GIRDER DETAILS NO. 2" SHEET.
3. FOR BRIDGING DETAILS, SEE "LATERAL BRACING DETAILS NO. 2" SHEET
4. FOR CONNECTION DETAILS AT BEARING STIFFENERS, SEE SECTIONS A-A AND B-B ON "END FLOOR BEAM DETAILS NO. 2 (SHORT SPANS)" SHEET.
5. BALLAST DEPTH BELOW THE TIE IS 8" MIn @ BENT 3 AND 15 5/16" Max @ Abut 5.
6. PL 10" x 1" JACKING STIFFENERS, NS & FS 1" Max CLIPS AND WELD PER DETAIL C ON "GIRDER DETAILS NO. 2" SHEET.
7. INTERMEDIATE STIFFENERS PLACED AS MATCHING PAIRS AT KNEE BRACES.
8. (FCM) INDICATES FRACTURE CRITICAL MEMBERS.
9. TPG = THROUGH PLATE GIRDER.

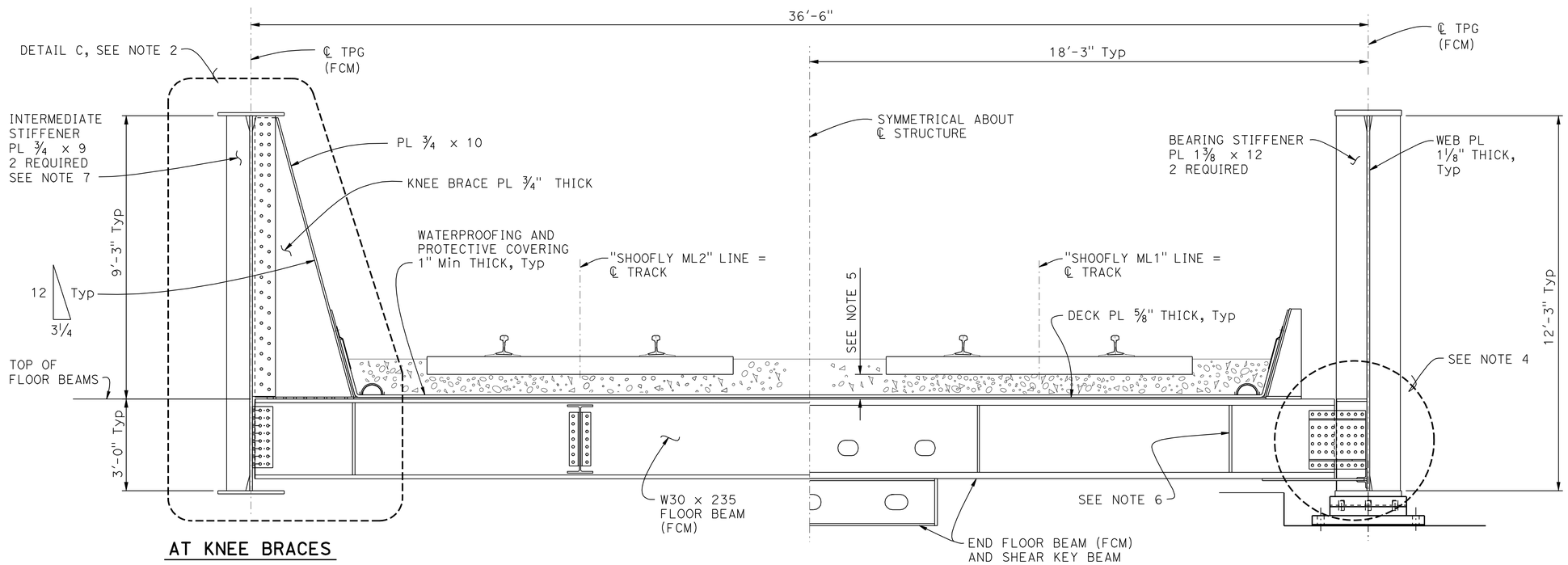

AT KNEE BRACES

AT BEARING STIFFENERS

TYPICAL SECTION

1/2" = 1"-0"

DESIGN	BY B. Addlespurger	CHECKED L. Wu
DETAILS	BY E. Montevirgen	CHECKED L. Wu
QUANTITIES	BY B. Addlespurger	CHECKED R. Anderson

STATE OF CALIFORNIA
DEPARTMENT OF TRANSPORTATION

DIVISION OF ENGINEERING SERVICES
STRUCTURE DESIGN
DESIGN BRANCH 10

BRIDGE NO. 54-1306
R.R. MILE POST 5.88
LINE SEG. 7602

HIGHGROVE UP (SHOOFLY)
TYPICAL SECTION

STRUCTURES DESIGN DETAIL SHEET (ENGLISH) (REV. 09-01-10)

ORIGINAL SCALE IN INCHES FOR REDUCED PLANS 0 1 2 3

UNIT: 3589
PROJECT NUMBER & PHASE: 08000005061
CONTRACT NO.: 08-0M9401

DISREGARD PRINTS BEARING EARLIER REVISION DATES

REVISION DATES: 12-08-11 2-09-12 4-02-12

SHEET 24 OF 49

FILE => 541306ktsz4.dgn

USERNAME => s124496 DATE PLOTTED => 14-JUN-2012 TIME PLOTTED => 06:18

DIST	COUNTY	ROUTE	POST MILES TOTAL PROJECT	SHEET No.	TOTAL SHEETS
08	Riv,SBd	91,215	21.5/21.7, 43.2/45.2,0.0/5.1	1702	1743

REGISTERED CIVIL ENGINEER — DATE 4-06-12

4-16-12
PLANS APPROVAL DATE

The State of California or its officers or agents shall not be responsible for the accuracy or completeness of electronic copies of this plan sheet.

REGISTERED PROFESSIONAL ENGINEER — LARRY WU No. C57035 Exp. 6-30-13 CIVIL — STATE OF CALIFORNIA

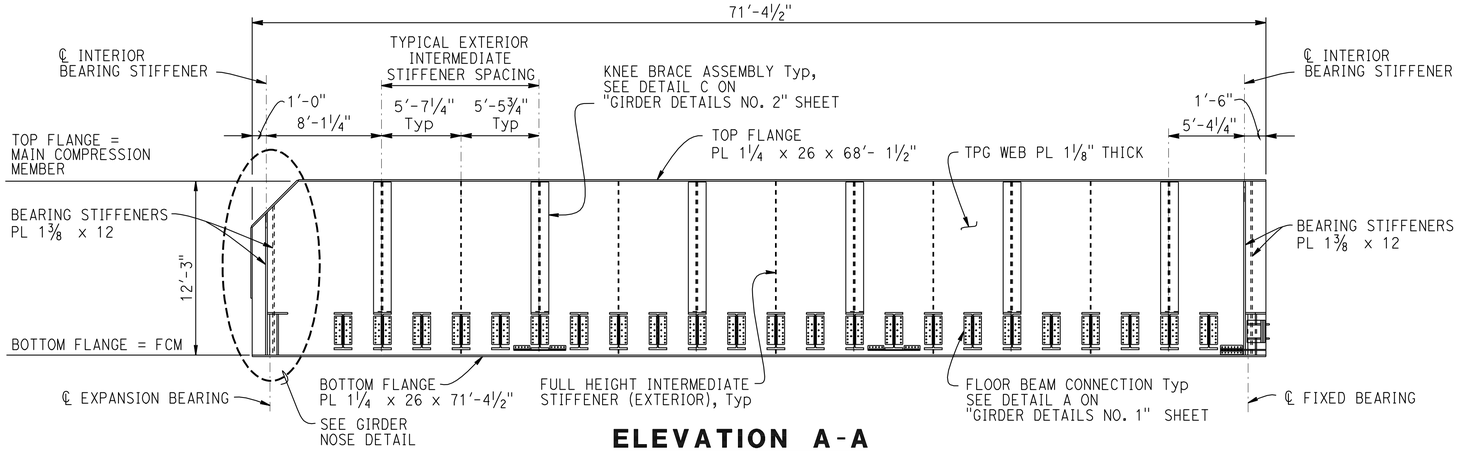

ELEVATION A-A

3/16" = 1'-0"

LOADING SUMMARY TABLE SHORT SPAN			
TPG	MID SPAN		END
	MOMENT(FT-KIP)	SHEAR(KIP)	SHEAR(KIP)
DL	3995	0	235
LL+I	8830	205	555
TOTAL	12825	205	790

NOTES:

1. Welds for stiffeners, girder splices, and transitions are shown on "GIRDER DETAILS NO. 4" sheet.
2. FCM and compression zones extend to the middle depth of the web.
3. Left and Right Girder stiffener placements are identical by rotation. Span 1 shown , Span 4 identical by rotation.
4. Short Span Through Plate Girders need not be cambered.
5. WT6 Lateral Bracing shall be fastened to W 27 bridging, total ten locations per short spans. See "LATERAL BRACING DETAILS NO.2" Sheet

LEGEND:

⊗ = Indicates location of Knee Braces.
FCM = Fracture Critical Member
TPG = Through Plate Girder

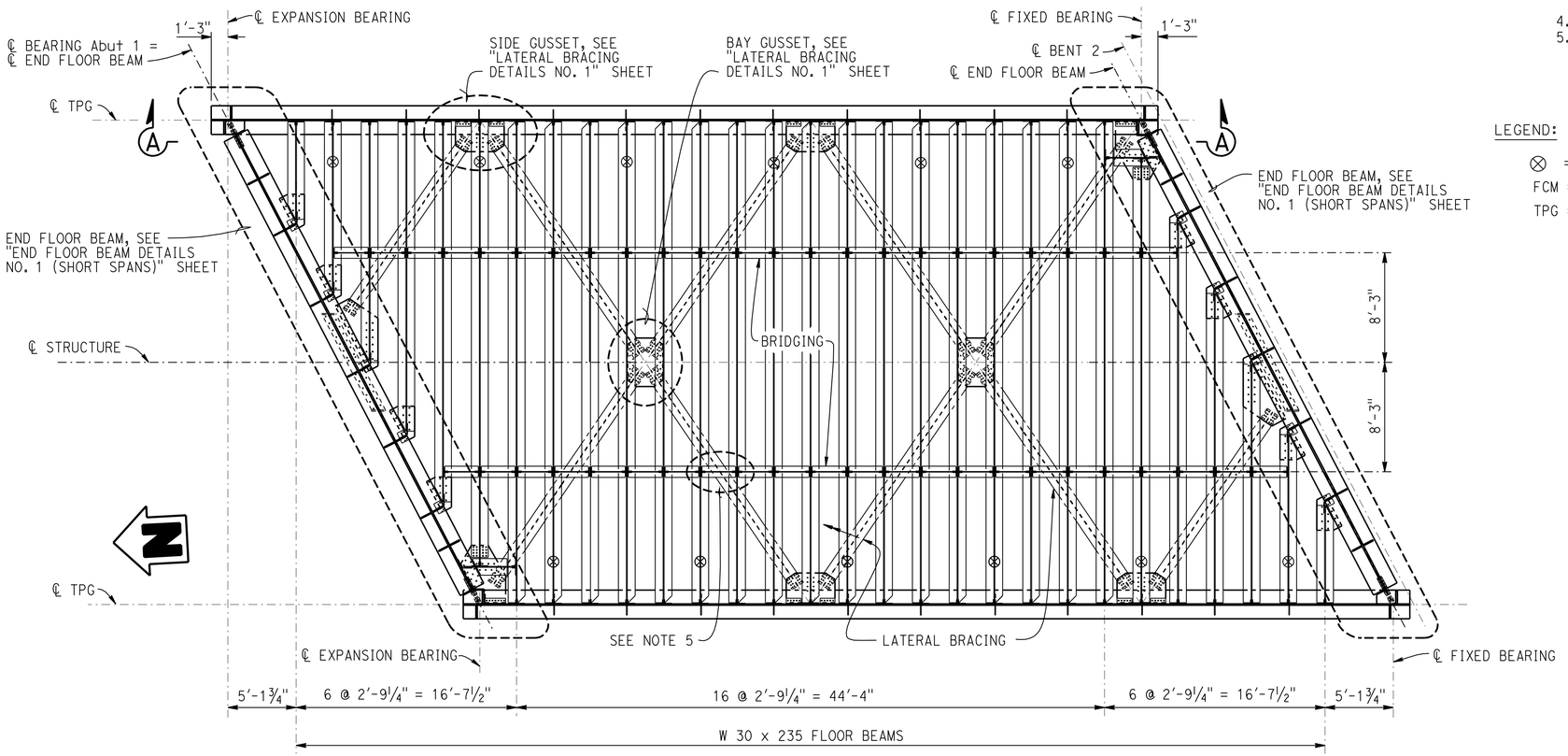

SPAN 1

3/16" = 1'-0"

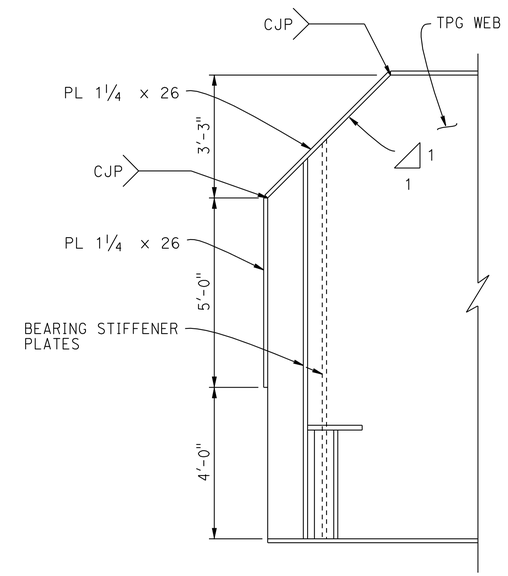

GIRDER NOSE DETAIL

½" = 1'-0"
AT Abut 1 AND Abut 5 ONLY

DESIGN	BY B. Addlespurger	CHECKED L. Wu	
DETAILS	BY E. Montevirgen	CHECKED L. Wu	
QUANTITIES	BY B. Addlespurger	CHECKED R. Anderson	

STATE OF CALIFORNIA
DEPARTMENT OF TRANSPORTATION

DIVISION OF ENGINEERING SERVICES
STRUCTURE DESIGN
DESIGN BRANCH 10

BRIDGE NO. 54-1306
R.R. MILE POST 5.88
LINE SEG. 7602

HIGHGROVE UP (SHOOFLY)
GIRDER LAYOUT NO. 1 (SHORT SPANS)

STRUCTURES DESIGN DETAIL SHEET (ENGLISH) (REV. 09-01-10)

ORIGINAL SCALE IN INCHES FOR REDUCED PLANS 0 1 2 3

UNIT: 3589
PROJECT NUMBER & PHASE: 08000005061
CONTRACT NO.: 08-0M9401

DISREGARD PRINTS BEARING EARLIER REVISION DATES

REVISION DATES: 1-14-11 | 4-02-12 | 2-13-12

SHEET 25 OF 49

FILE => 541306lg_lo25.dgn

USERNAME => s124496 DATE PLOTTED => 14-JUN-2012 TIME PLOTTED => 06:18

DIST	COUNTY	ROUTE	POST MILES TOTAL PROJECT	SHEET No.	TOTAL SHEETS
08	Riv,SBd	91,215	21.5/21.7, 43.2/45.2,0.0/5.1	1703	1743

REGISTERED CIVIL ENGINEER — DATE 4-06-12

4-16-12
PLANS APPROVAL DATE

REGISTERED PROFESSIONAL ENGINEER — LARRY WU No. C57035 Exp. 6-30-13 CIVIL — STATE OF CALIFORNIA

The State of California or its officers or agents shall not be responsible for the accuracy or completeness of electronic copies of this plan sheet.

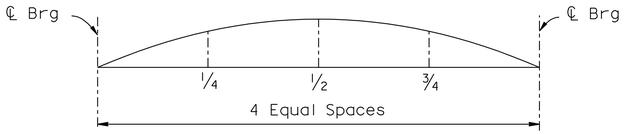

DEAD LOAD CAMBER DIAGRAM

Camber Components \ Ordinates	1/4	1/2	3/4
PL Girder & Stiffeners	0.09	0.12	0.09
Added Steel Components	0.17	0.24	0.17
Ballast,Track & Ties (Min)	0.19	0.27	0.19
Ballast,Track & Ties (Max)	0.35	0.50	0.35
Total Camber (inch)	0.45	0.63	0.45

NOTES:

1. Welds for stiffeners, girder splices, and transitions are shown on "GIRDER DETAILS NO. 4" sheet.
2. FCM and compression zones extend to the middle depth of the web.
3. Left and Right Girder stiffener placements are identical by rotation. Span 2 shown , Span 3 is identical by rotation.
4. Camber Diagram View is an Interior Elevation of each Girder.
5. WT 6 Lateral Bracing shall be fastened to W 27 Bridging, total eighteen locations per long spans. See "LATERAL BRACING DETAILS NO.2" Sheet

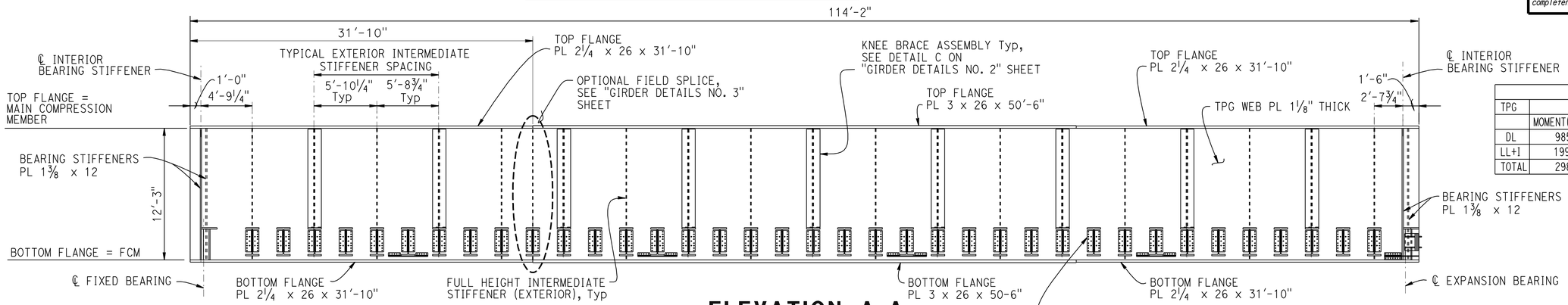

ELEVATION A-A

3/16" = 1'-0"

LOADING SUMMARY TABLE LONG SPAN					
TPG	MID SPAN		FIELD SPLICE		END
	MOMENT(FT-KIP)	SHEAR(KIP)	MOMENT(FT-KIP)	SHEAR(KIP)	SHEAR(KIP)
DL	9855	0	7840	160	355
LL+I	19995	240	16605	460	800
TOTAL	29850	240	24445	620	1155

LEGEND:

⊗ = Indicates location of Knee Braces
FCM = Fracture Critical Member
TPG = Through Plate Girder

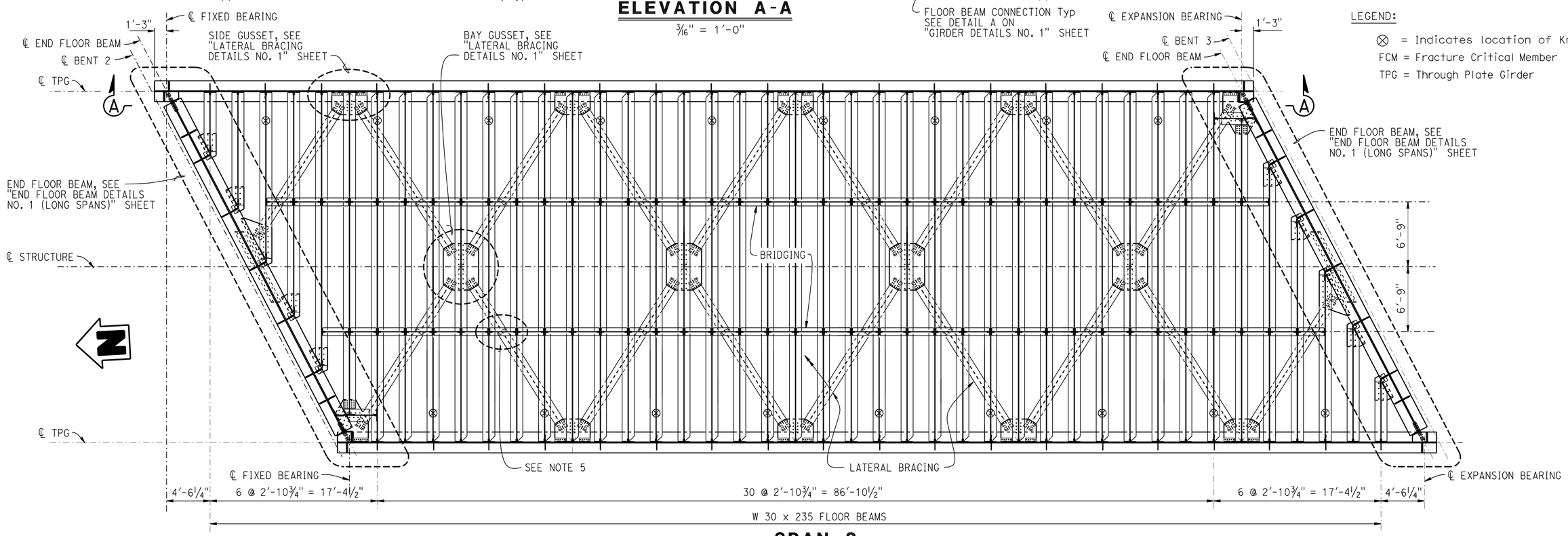

SPAN 2

3/16" = 1'-0"

DESIGN	BY B. Addlespurger	CHECKED L. Wu	
DETAILS	BY E. Montevirgen	CHECKED L. Wu	
QUANTITIES	BY B. Addlespurger	CHECKED R. Anderson	

STATE OF CALIFORNIA
DEPARTMENT OF TRANSPORTATION

DIVISION OF ENGINEERING SERVICES
STRUCTURE DESIGN
DESIGN BRANCH 10

BRIDGE NO. 54-1306
R.R. MILE POST 5.88
LINE SEG. 7602

HIGHGROVE UP (SHOOFLY)
GIRDER LAYOUT NO. 2 (LONG SPANS)

STRUCTURES DESIGN DETAIL SHEET (ENGLISH) (REV. 09-01-10)

ORIGINAL SCALE IN INCHES FOR REDUCED PLANS 0 1 2 3

UNIT: 3589
PROJECT NUMBER & PHASE: 08000005061
CONTRACT NO.: 08-0M9401

DISREGARD PRINTS BEARING EARLIER REVISION DATES

REVISION DATES 1-14-11 2-01-12 4-02-12

SHEET 26 OF 49

FILE => 541306lgc_lo26.dgn

USERNAME => s124096 DATE PLOTTED => 14-JUN-2012 TIME PLOTTED => 06:18

DIST	COUNTY	ROUTE	POST MILES TOTAL PROJECT	SHEET No.	TOTAL SHEETS
08	Riv,SBd	91,215	21.5/21.7, 43.2/45.2,0.0/5.1	1704	1743

REGISTERED CIVIL ENGINEER — DATE 4-06-12

4-16-12
PLANS APPROVAL DATE

REGISTERED PROFESSIONAL ENGINEER — LARRY WU — No. C57035 — Exp. 6-30-13 — CIVIL — STATE OF CALIFORNIA

The State of California or its officers or agents shall not be responsible for the accuracy or completeness of electronic copies of this plan sheet.

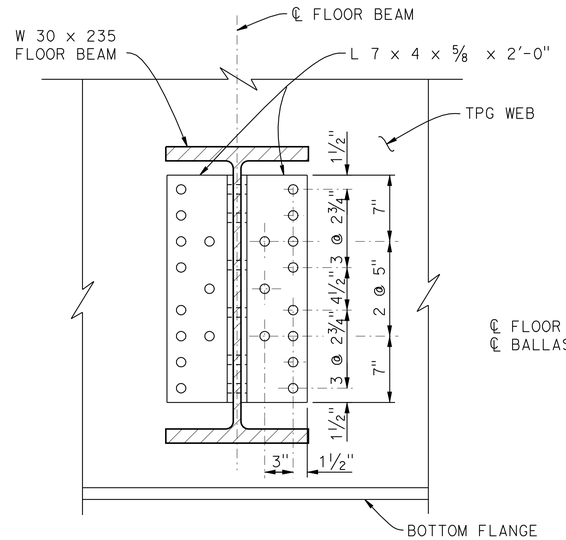

TYPE 1 FB HANGER
SECTION A-A
1½" = 1'-0"

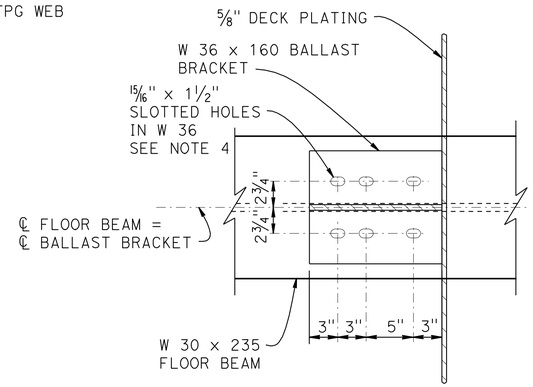

TYPE 1 BRACKET
SECTION B-B
1½" = 1'-0"

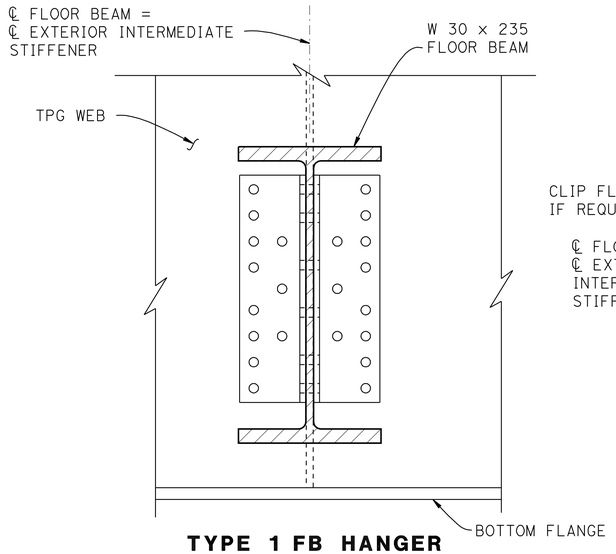

TYPE 1 FB HANGER
SECTION C-C
1½" = 1'-0"
SEE SECTION A-A FOR DIMENSIONS NOT SHOWN

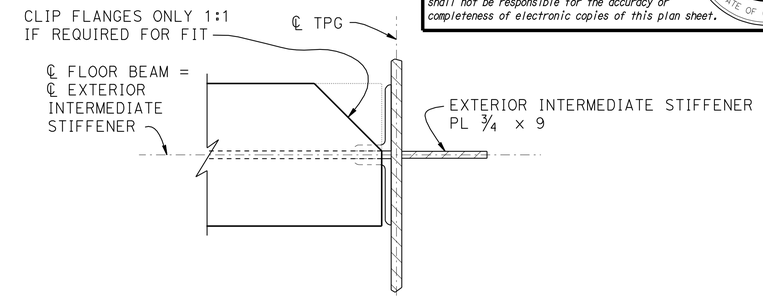

SECTION D-D
1½" = 1'-0"

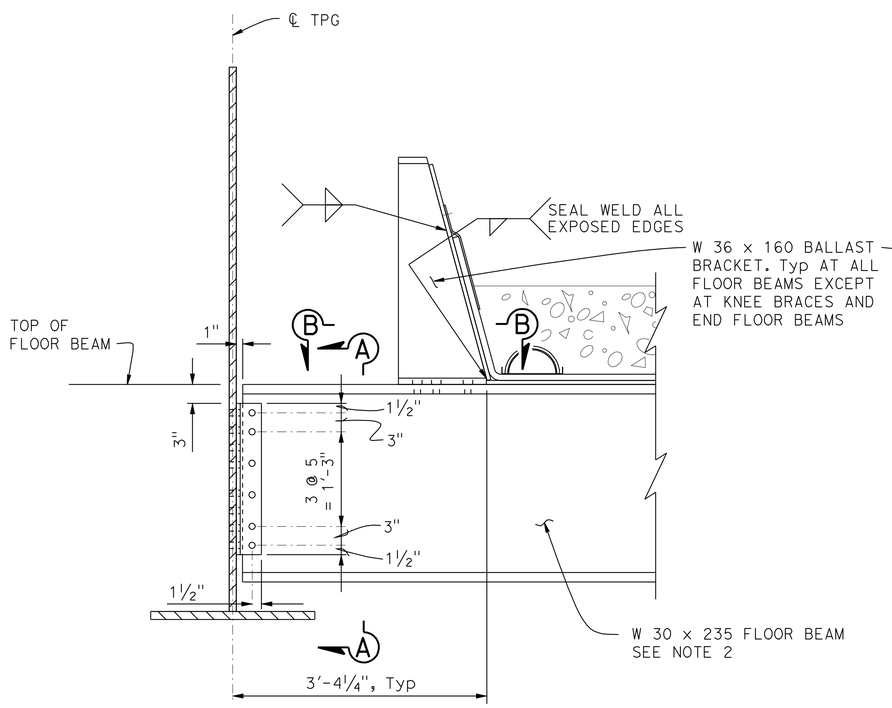

DETAIL A
1" = 1'-0"

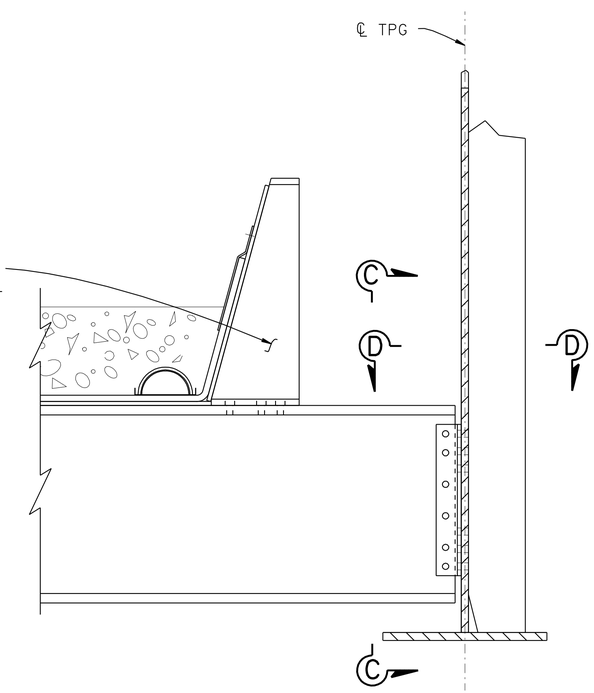

NOTE: SEE DETAIL A FOR DIMENSIONS NOT SHOWN

DETAIL B
1" = 1'-0"

NOTES:

1. FOR LOCATIONS OF DETAIL A AND DETAIL B, SEE " TYPICAL SECTION" SHEET.
2. LATERAL BRACING SYSTEM NOT SHOWN FOR CLARITY.
3. FOR DECK PLATING, SEE "DECK PLATING LAYOUT" AND "DECK PLATING DETAILS" SHEETS FOR ADDITIONAL INFORMATION.
4. TYPICAL TYPE 1 BRACKETS DO NOT REQUIRE SLOTTED HOLES. SLOTTED HOLES ARE REQUIRED NEAR JOINTS. SEE "DECK PLATING LAYOUT" SHEET.

	BY	CHECKED
DESIGN	B. Addlespurger	L. Wu
DETAILS	E. Montevirgen	L. Wu
QUANTITIES	B. Addlespurger	R. Anderson

STATE OF CALIFORNIA
DEPARTMENT OF TRANSPORTATION

DIVISION OF ENGINEERING SERVICES
STRUCTURE DESIGN
DESIGN BRANCH 10

BRIDGE NO. 54-1306
R.R. MILE POST 5.88
LINE SEG. 7602

HIGHGROVE UP (SHOOFLY)
GIRDER DETAILS NO. 1

STRUCTURES DESIGN DETAIL SHEET (ENGLISH) (REV. 09-01-10)

ORIGINAL SCALE IN INCHES FOR REDUCED PLANS 0 1 2 3

UNIT: 3589
PROJECT NUMBER & PHASE: 08000005061
CONTRACT NO.: 08-0M9401

DISREGARD PRINTS BEARING EARLIER REVISION DATES

REVISION DATES: 12-08-11 2-09-12 4-02-12

SHEET 27 OF 49

FILE => 541306lgdt27.dgn

USERNAME => s124496 DATE PLOTTED => 14-JUN-2012 TIME PLOTTED => 06:18

DIST	COUNTY	ROUTE	POST MILES TOTAL PROJECT	SHEET No.	TOTAL SHEETS
08	Riv,SBd	91,215	21.5/21.7, 43.2/45.2,0.0/5.1	1705	1743

REGISTERED CIVIL ENGINEER — DATE 4-06-12

4-16-12
PLANS APPROVAL DATE

REGISTERED PROFESSIONAL ENGINEER — LARRY WU — No. C57035 — Exp. 6-30-13 — CIVIL — STATE OF CALIFORNIA

The State of California or its officers or agents shall not be responsible for the accuracy or completeness of electronic copies of this plan sheet.

NOTES:

1. FOR LOCATION OF DETAIL C, SEE "TYPICAL SECTION" SHEET.
2. FOR KNEE BRACE, FLOOR BEAM AND INTERMEDIATE STIFFENER LOCATIONS, SEE "GIRDER LAYOUT" SHEETS.
3. FOR CURB FLASHING DETAIL, SEE "DECK PLATING DETAILS" SHEET.
4. WHEN KNEE BRACE OCCURS NEAR FIELD SPLICE, 1" DIMENSION BECOMES 1¾" AND 2¼" BECOMES 1½".

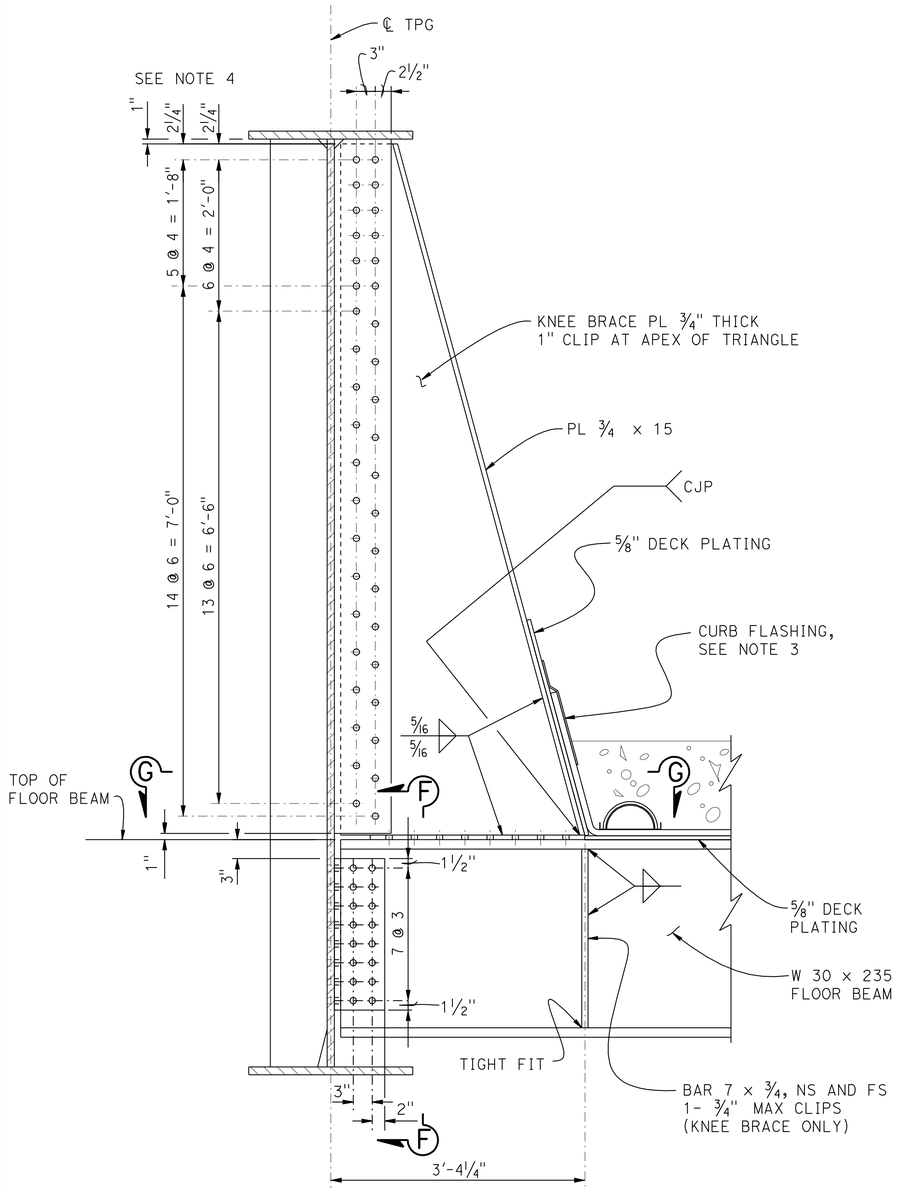

KNEE BRACE
DETAIL C
1" = 1'-0"

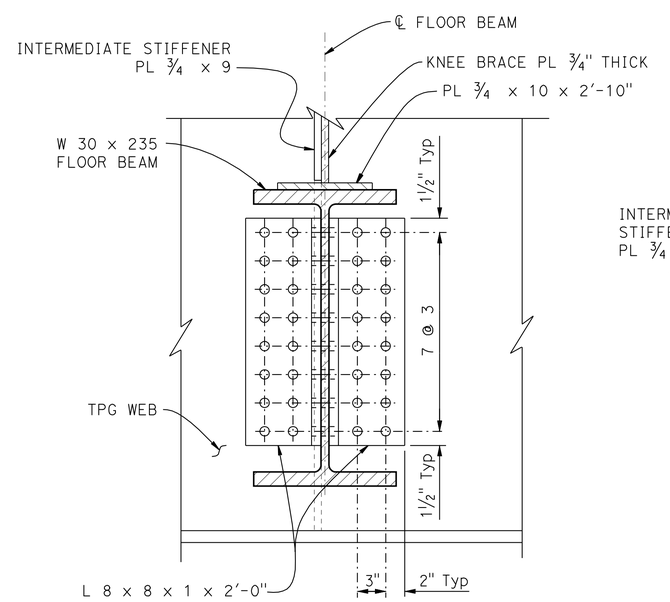

SECTION F-F
1½" = 1'-0"

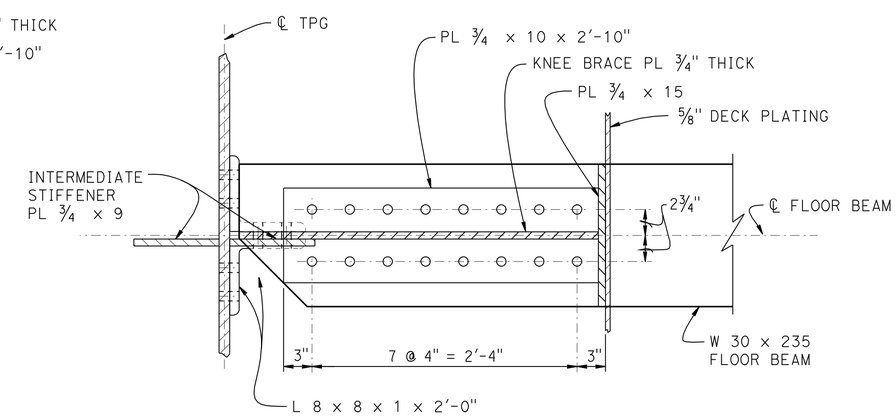

SECTION G-G
1½" = 1'-0"

DESIGN	BY B. Addlespurger	CHECKED L. Wu	
DETAILS	BY E. Montevirgen	CHECKED L. Wu	
QUANTITIES	BY B. Addlespurger	CHECKED R. Anderson	

STATE OF CALIFORNIA
DEPARTMENT OF TRANSPORTATION

DIVISION OF ENGINEERING SERVICES
STRUCTURE DESIGN
DESIGN BRANCH 10

BRIDGE NO. 54-1306
R.R. MILE POST 5.88
LINE SEG. 7602

HIGHGROVE UP (SHOOFLY)
GIRDER DETAILS NO. 2

STRUCTURES DESIGN DETAIL SHEET (ENGLISH) (REV. 09-01-10)

ORIGINAL SCALE IN INCHES FOR REDUCED PLANS 0 1 2 3

UNIT: 3589
PROJECT NUMBER & PHASE: 08000005061
CONTRACT NO.: 08-0M9401

DISREGARD PRINTS BEARING EARLIER REVISION DATES

REVISION DATES: 12-08-11 2-09-12 4-02-12

SHEET 28 OF 49

FILE => 541306lgdt28.dgn

USERNAME => s124496 DATE PLOTTED => 14-JUN-2012 TIME PLOTTED => 06:19

DIST	COUNTY	ROUTE	POST MILES TOTAL PROJECT	SHEET No.	TOTAL SHEETS
08	Riv,SBd	91,215	21.5/21.7, 43.2/45.2,0.0/5.1	1706	1743

REGISTERED CIVIL ENGINEER — DATE 4-06-12

4-16-12
PLANS APPROVAL DATE

REGISTERED PROFESSIONAL ENGINEER — LARRY WU No. C57035 Exp. 6-30-13 CIVIL — STATE OF CALIFORNIA

The State of California or its officers or agents shall not be responsible for the accuracy or completeness of electronic copies of this plan sheet.

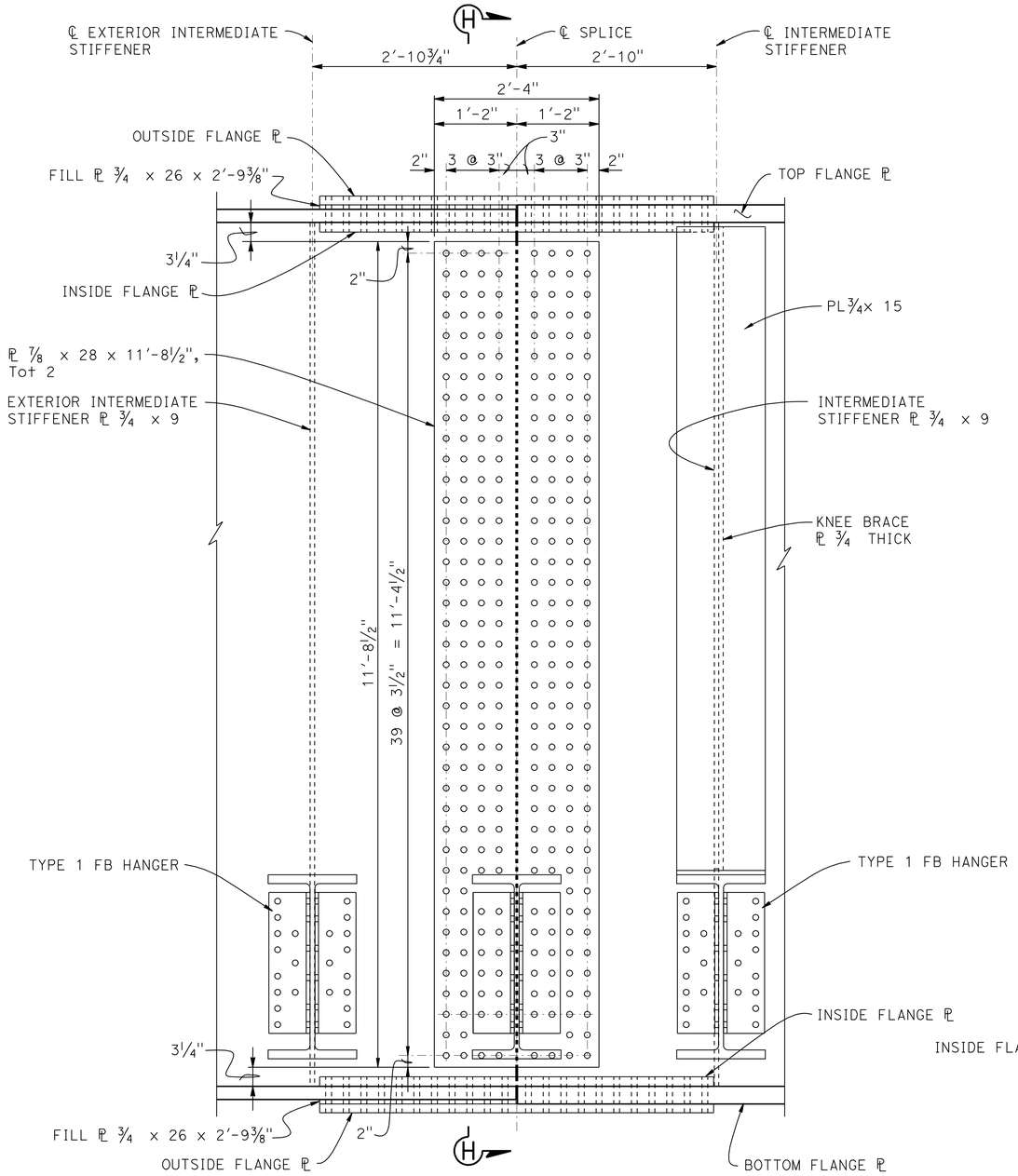

ELEVATION

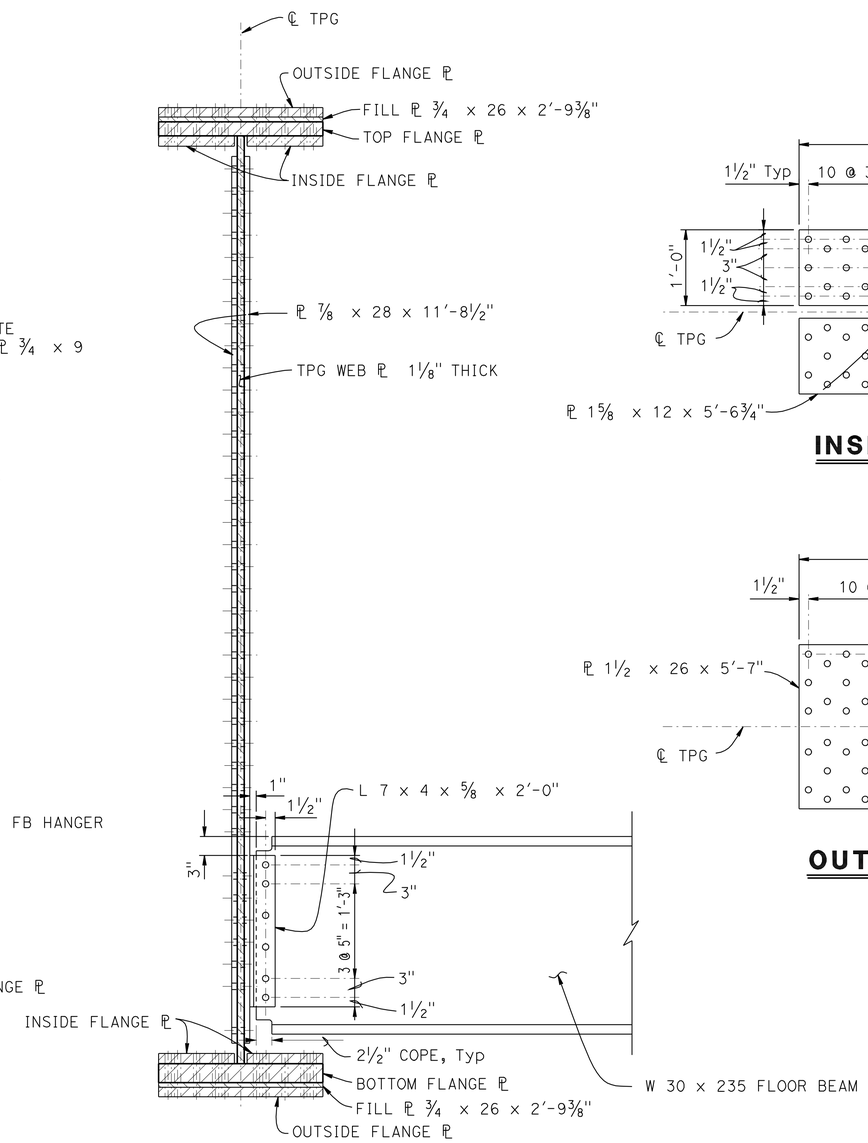

SECTION H-H

OPTIONAL FIELD SPLICE AT LONG SPANS

1" = 1'-0"

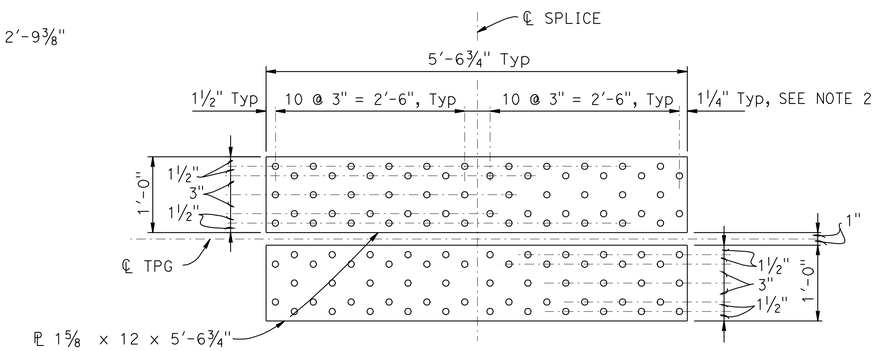

INSIDE FLANGE PLATES

1" = 1'-0"

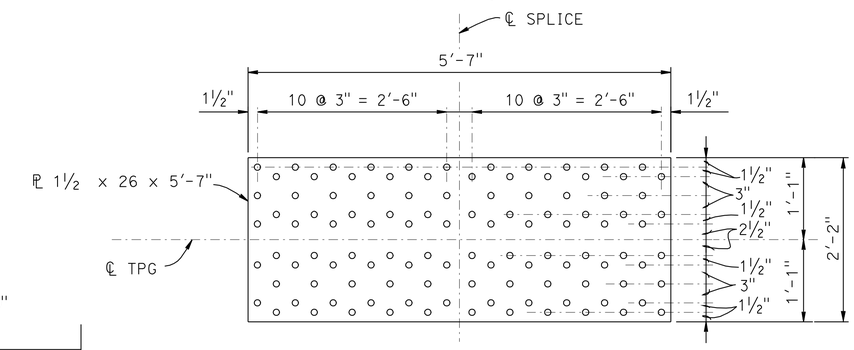

OUTSIDE FLANGE PLATE

1" = 1'-0"

NOTES:

1. FOR LOCATION OF OPTIONAL SPLICE PLATE AT LONG SPANS, SEE "GIRDER LAYOUT NO. 2 (LONG SPANS)" SHEET.
2. INSIDE FLANGE PLATES MUST BE THERMALLY CUT FOR PLACEMENT NEAR INTERMEDIATE STIFFENER.
3. FIELD SPLICE PLATES ARE FCM.

	BY	CHECKED
DESIGN	B. Addlespurger	L. Wu
DETAILS	E. Montevirgen	L. Wu
QUANTITIES	B. Addlespurger	R. Anderson

STATE OF CALIFORNIA
DEPARTMENT OF TRANSPORTATION

DIVISION OF ENGINEERING SERVICES
STRUCTURE DESIGN
DESIGN BRANCH 10

BRIDGE NO. 54-1306
R.R. MILE POST 5.88
LINE SEG. 7602

HIGHGROVE UP (SHOOFLY)
GIRDER DETAILS NO. 3

STRUCTURES DESIGN DETAIL SHEET (ENGLISH) (REV. 09-01-10)

ORIGINAL SCALE IN INCHES FOR REDUCED PLANS 0 1 2 3

UNIT: 3589
PROJECT NUMBER & PHASE: 08000005061
CONTRACT NO.: 08-0M9401

DISREGARD PRINTS BEARING EARLIER REVISION DATES

REVISION DATES: 2-04-12 2-08-12 4-02-12

SHEET 29 OF 49

FILE => 541306lgdt29.dgn

USERNAME => s124496 DATE PLOTTED => 14-JUN-2012 TIME PLOTTED => 06:19

DIST	COUNTY	ROUTE	POST MILES TOTAL PROJECT	SHEET No.	TOTAL SHEETS
08	Riv,SBd	91,215	21.5/21.7, 43.2/45.2,0.0/5.1	1707	1743

REGISTERED CIVIL ENGINEER 4-06-12 DATE

4-16-12
PLANS APPROVAL DATE

REGISTERED PROFESSIONAL ENGINEER LARRY WU No. C57035 Exp. 6-30-13 CIVIL STATE OF CALIFORNIA

The State of California or its officers or agents shall not be responsible for the accuracy or completeness of electronic copies of this plan sheet.

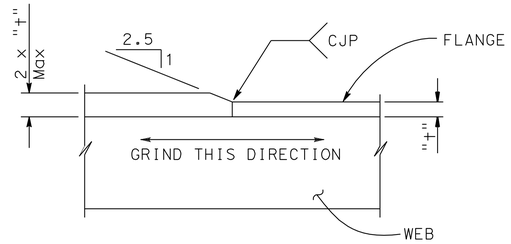

FLANGE THICKNESS

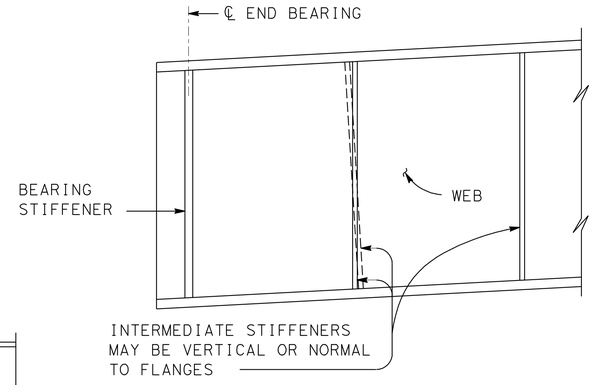

TRANSVERSE STIFFENERS

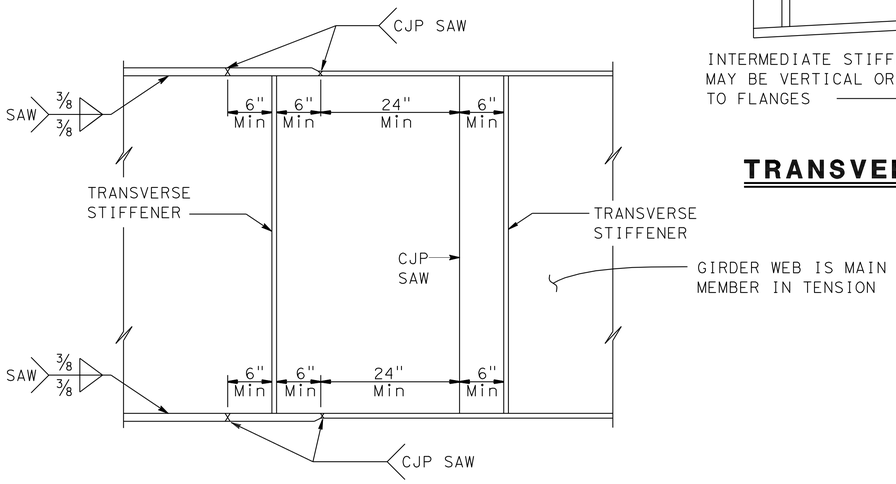

GIRDER SHOP SPLICE

NOTES:

1. Alternative girder splices may be permitted subject to approval by the Engineer.
2. Web splices:
   Grind all weld surfaces flush on the exterior face of exterior girders.
3. Flange splices:
   Grind all weld surfaces flush on tension flanges.
   Grind all weld surfaces flush on compression flanges when required for non-destructive testing (NDT).

NOTES:

1. Under full dead load as shown on the camber diagram, girder ends and bearing stiffeners shall be vertical except they may be normal to grade for grades less than 2 percent.
2. For stiffener sizes see Project Plan sheets.
3. Fillet Weld size to be minimum size from Project Specifications unless otherwise shown on Project Plan sheets.

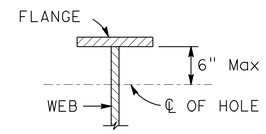

1" Max diameter hole at 4′ ± Min spacing to be used for falsework support when specified by the Contractor. Contractor to determine location, size and spacing.

2" Max diameter hole to be drilled where lighting conduit passes through girder web. For location and size of hole see "Road Plans".

HOLES FOR CONDUIT AND FALSEWORK

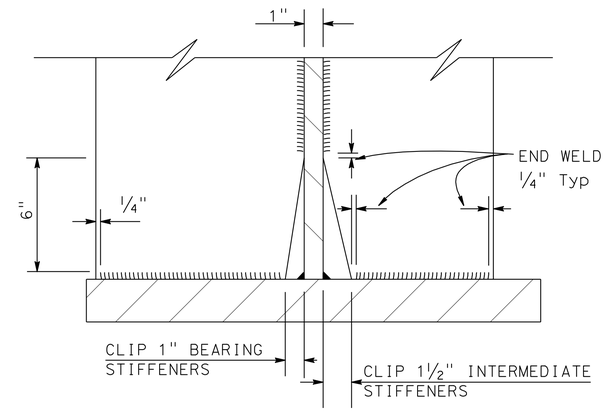

CLIP AND WELDING DETAIL

TENSION FLANGE

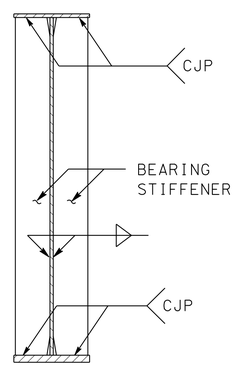

ABUTMENT

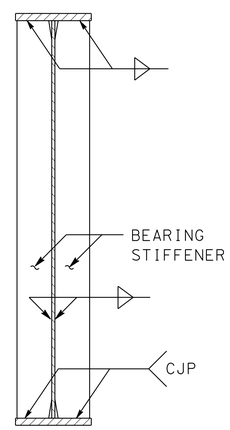

BENT

BEARING STIFFENERS

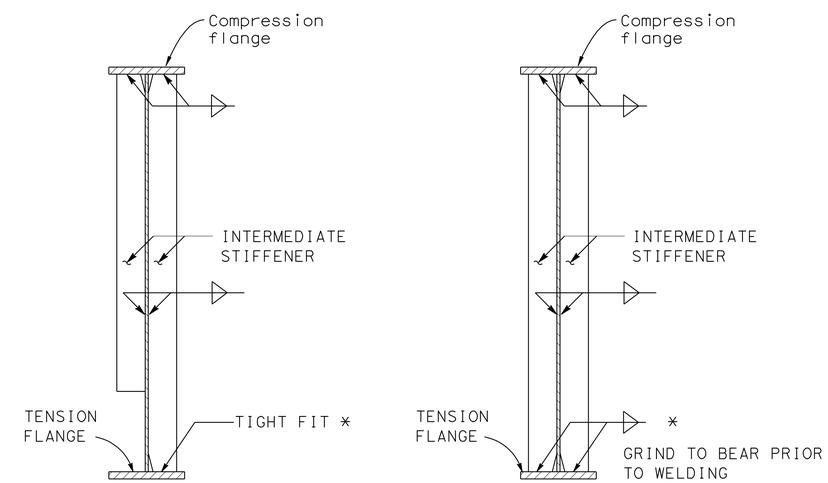

INTERMEDIATE STIFFENERS

* Exterior Intermediate Stiffeners located within 11′-6" from ℄ bearing stiffener shall also be welded to the tension flange

NO SCALE

DESIGN	BY B Addlespurger	CHECKED L. Wu	
DETAILS	BY B Addlespurger	CHECKED L. Wu	
QUANTITIES	BY B Addlespurger	CHECKED R. Anderson	

STATE OF CALIFORNIA
DEPARTMENT OF TRANSPORTATION

DIVISION OF ENGINEERING SERVICES
STRUCTURE DESIGN
DESIGN BRANCH 10

BRIDGE NO. 54-1306
R.R. MILE POST 5.88
LINE SEG. 7602

HIGHGROVE UP (SHOOFLY)
GIRDER DETAILS NO. 4

STRUCTURES DESIGN DETAIL SHEET (ENGLISH) (REV. 09-01-10)

ORIGINAL SCALE IN INCHES FOR REDUCED PLANS 0 1 2 3

UNIT: 3589
PROJECT NUMBER & PHASE: 08000005061
CONTRACT NO.: 08-0M9401

DISREGARD PRINTS BEARING EARLIER REVISION DATES

REVISION DATES 12-8-11 2-08-12

SHEET 30 OF 49

FILE => 541306lgdt30.dgn

USERNAME => s124496 DATE PLOTTED => 14-JUN-2012 TIME PLOTTED => 06:19

DIST	COUNTY	ROUTE	POST MILES TOTAL PROJECT	SHEET No.	TOTAL SHEETS
08	Riv,SBd	91,215	21.5/21.7, 43.2/45.2,0.0/5.1	1708	1743

REGISTERED CIVIL ENGINEER — DATE 4-06-12

4-16-12
PLANS APPROVAL DATE

REGISTERED PROFESSIONAL ENGINEER — LARRY WU No. C57035 Exp. 6-30-13 CIVIL — STATE OF CALIFORNIA

The State of California or its officers or agents shall not be responsible for the accuracy or completeness of electronic copies of this plan sheet.

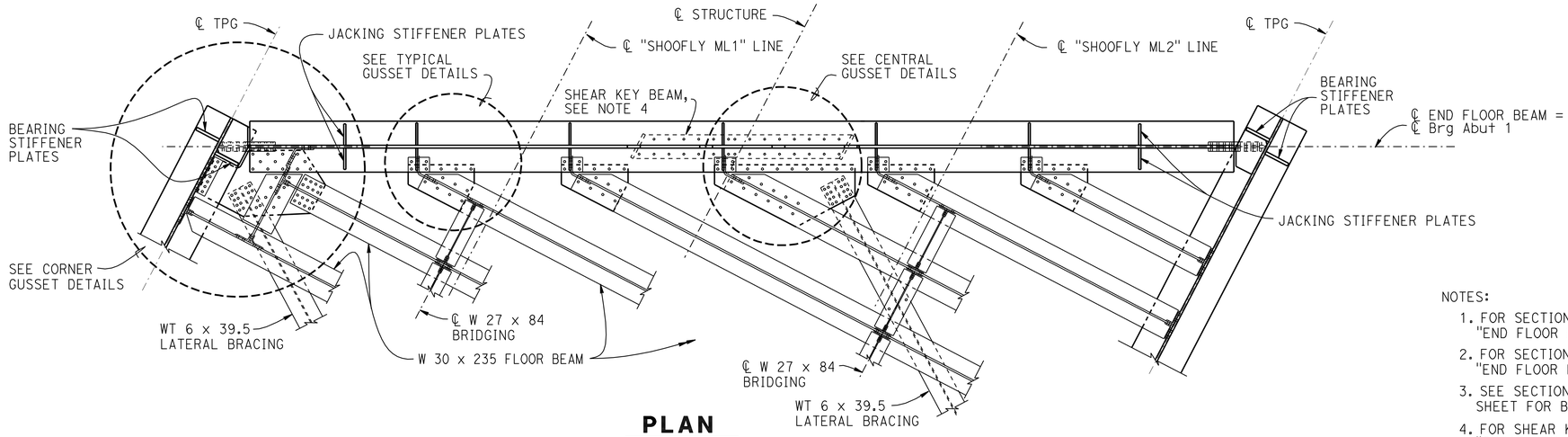

PLAN

3/8" = 1'-0"

-END FLOOR BEAM AT Abut 1 SHOWN, Abut 5 AND END FLOOR BEAMS AT BENTS 2 AND 4 (SHORT SPANS) ARE SIMILAR EXCEPT AS NOTED
-ONLY BOTTOM FLANGES SHOWN FOR CLARITY

NOTES:

1. FOR SECTIONS A-A, B-B AND C-C, SEE "END FLOOR BEAM DETAILS NO. 2 (SHORT SPANS)" SHEET.
2. FOR SECTIONS D-D AND E-E, SEE "END FLOOR BEAM DETAILS NO. 3 (SHORT SPANS)" SHEET.
3. SEE SECTION E-E ON "END FLOOR BEAM DETAILS NO. 3 (SHORT SPANS)" SHEET FOR BENT PLATE CONNECTION DETAILS.
4. FOR SHEAR KEY BEAM DETAILS, SEE "SHEAR KEY BEAM LAYOUT" AND "SHEAR KEY BEAM DETAILS" SHEETS.

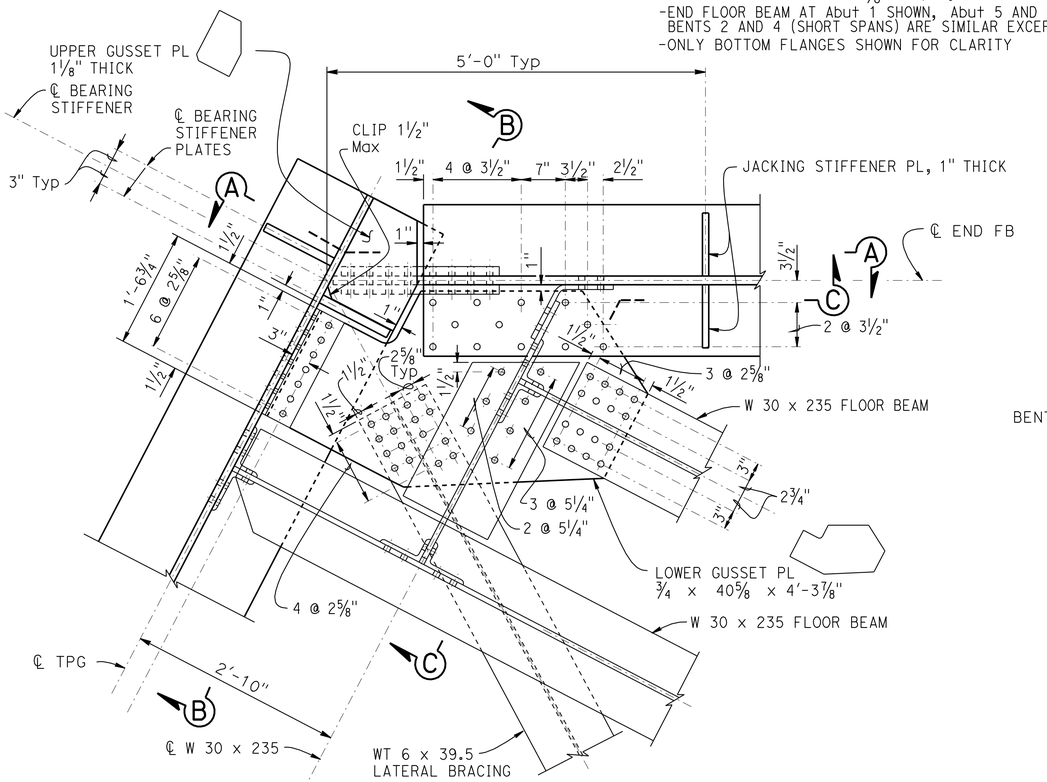

CORNER GUSSET DETAILS

1" = 1'-0"

-CORNER GUSSET (SHORT SPANS) SHOWN, CORNER GUSSET (LONG SPANS) SIMILAR

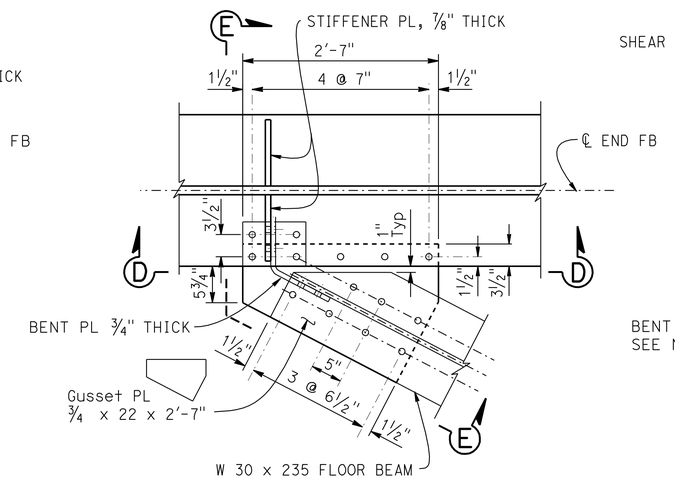

TYPICAL GUSSET DETAILS

1" = 1'-0"

-TYPICAL GUSSET (SHORT SPANS) SHOWN, TYPICAL GUSSET (LONG SPANS) IDENTICAL

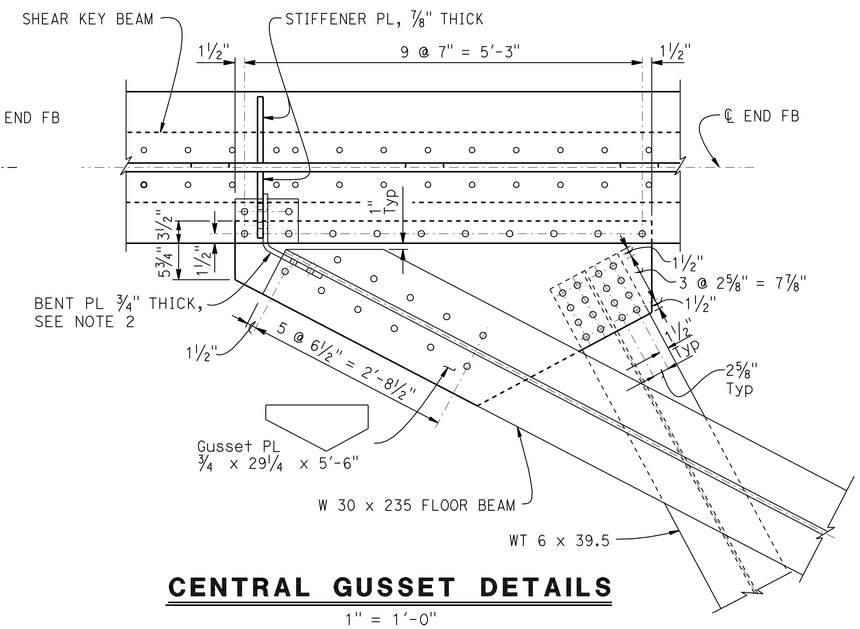

CENTRAL GUSSET DETAILS

1" = 1'-0"

	BY	CHECKED
DESIGN	B. Addlespurger	L. Wu
DETAILS	E. Montevirgen	L. Wu
QUANTITIES	B. Addlespurger	R. Anderson

STATE OF CALIFORNIA
DEPARTMENT OF TRANSPORTATION

DIVISION OF ENGINEERING SERVICES
STRUCTURE DESIGN
DESIGN BRANCH 10

BRIDGE NO. 54-1306
R.R. MILE POST 5.88
LINE SEG. 7602

HIGHGROVE UP (SHOOFLY)
END FLOOR BEAM DETAILS NO. 1 (SHORT SPANS)

STRUCTURES DESIGN DETAIL SHEET (ENGLISH) (REV. 09-01-10)

ORIGINAL SCALE IN INCHES FOR REDUCED PLANS 0 1 2 3

UNIT: 3589
PROJECT NUMBER & PHASE: 08000005061
CONTRACT NO.: 08-0M9401

DISREGARD PRINTS BEARING EARLIER REVISION DATES

REVISION DATES: 8-31-11 1-11-12 2-08-12 4-02-12

SHEET 31 OF 49

FILE => 541306lhendfbdet31.dgn

USERNAME => s124496 DATE PLOTTED => 14-JUN-2012 TIME PLOTTED => 06:19

DIST	COUNTY	ROUTE	POST MILES TOTAL PROJECT	SHEET No.	TOTAL SHEETS
08	Riv,SBd	91,215	21.5/21.7, 43.2/45.2,0.0/5.1	1709	1743

REGISTERED CIVIL ENGINEER — DATE 4-06-12

4-16-12
PLANS APPROVAL DATE

REGISTERED PROFESSIONAL ENGINEER — LARRY WU No. C57035 Exp. 6-30-13 CIVIL — STATE OF CALIFORNIA

The State of California or its officers or agents shall not be responsible for the accuracy or completeness of electronic copies of this plan sheet.

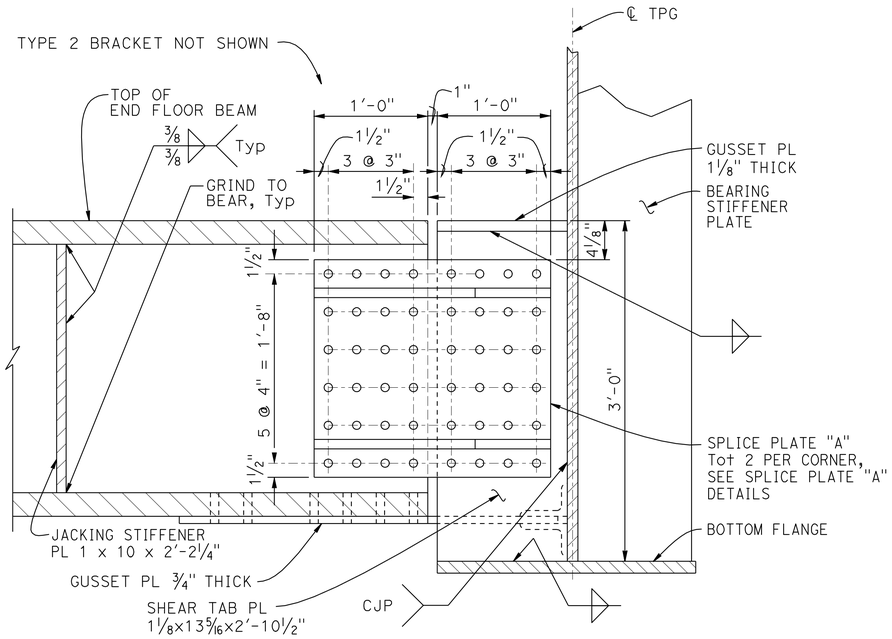

TYPE 4 FB HANGER

SECTION A-A (DEVELOPED)

1½" = 1'-0"

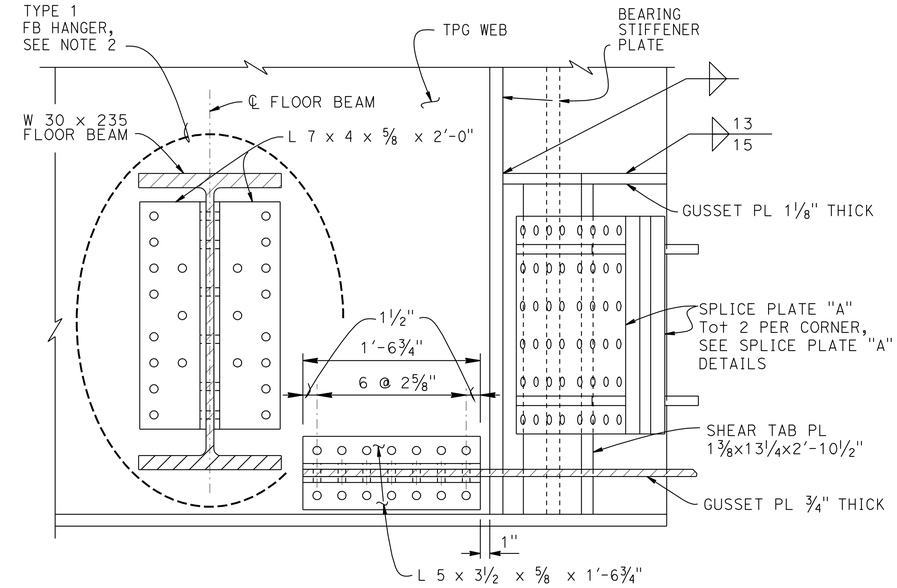

SECTION B-B

1½" = 1'-0"

NOTES:

1. FOR LOCATIONS OF SECTIONS A-A, B-B AND C-C, SEE "END FLOOR BEAM DETAILS NO. 1 (SHORT SPANS)" SHEET.
2. SEE SECTION A-A AND DETAIL A ON "GIRDER DETAILS NO. 1" SHEET FOR TYPE 1 FB HANGER CONNECTION DETAILS.

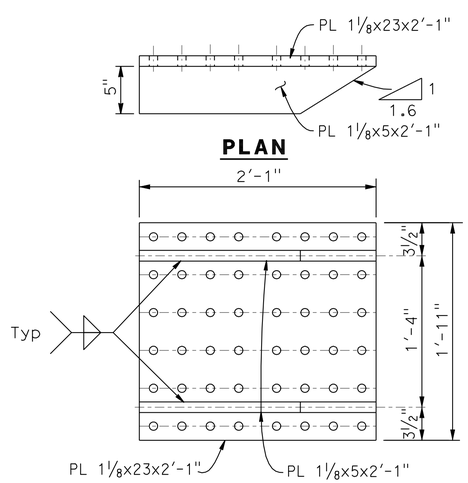

SPLICE PLATE "A" DETAILS

1½" = 1'-0"

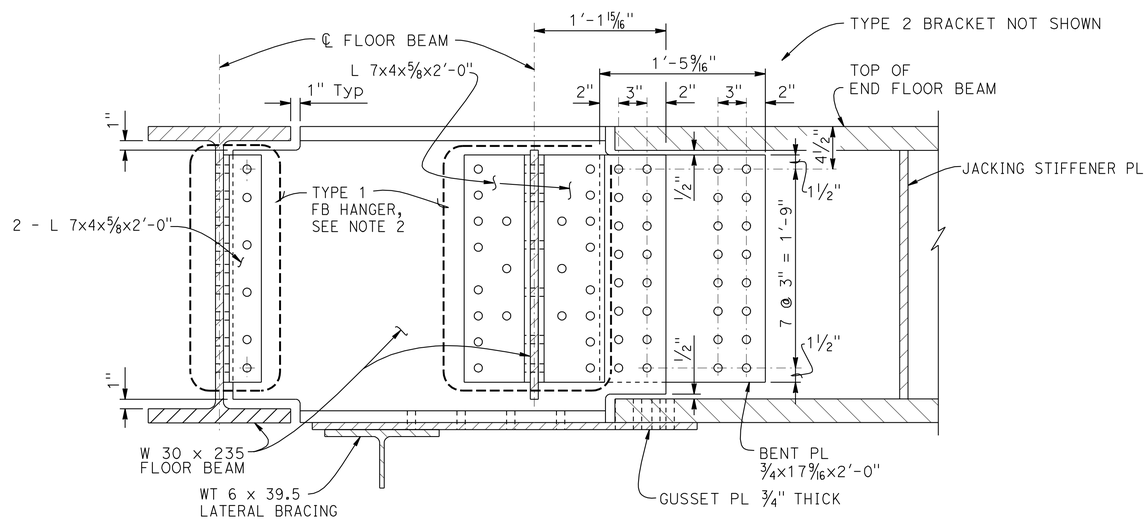

TYPE 3 FB HANGER

SECTION C-C (DEVELOPED)

1½" = 1'-0"

DESIGN	BY B. Addlespurger	CHECKED L. Wu	
DETAILS	BY E. Montevirgen	CHECKED L. Wu	
QUANTITIES	BY B. Addlespurger	CHECKED R. Anderson	

STATE OF CALIFORNIA
DEPARTMENT OF TRANSPORTATION

DIVISION OF ENGINEERING SERVICES
STRUCTURE DESIGN
DESIGN BRANCH 10

BRIDGE NO. 54-1306
R.R. MILE POST 5.88
LINE SEG. 7602

HIGHGROVE UP (SHOOFLY)

END FLOOR BEAM DETAILS NO. 2 (SHORT SPANS)

STRUCTURES DESIGN DETAIL SHEET (ENGLISH) (REV. 09-01-10)

ORIGINAL SCALE IN INCHES FOR REDUCED PLANS 0 1 2 3

UNIT: 3589
PROJECT NUMBER & PHASE: 08000005061
CONTRACT NO.: 08-0M9401

DISREGARD PRINTS BEARING EARLIER REVISION DATES

REVISION DATES 8-31-11

SHEET 32 OF 49

FILE => 541306lhendfbdet32.dgn

USERNAME => s124496 DATE PLOTTED => 14-JUN-2012 TIME PLOTTED => 06:19

DIST	COUNTY	ROUTE	POST MILES TOTAL PROJECT	SHEET No.	TOTAL SHEETS
08	Riv,SBd	91,215	21.5/21.7, 43.2/45.2,0.0/5.1	1710	1743

REGISTERED CIVIL ENGINEER — DATE 4-06-12

4-16-12
PLANS APPROVAL DATE

REGISTERED PROFESSIONAL ENGINEER — LARRY WU No. C57035 Exp. 6-30-13 CIVIL — STATE OF CALIFORNIA

The State of California or its officers or agents shall not be responsible for the accuracy or completeness of electronic copies of this plan sheet.

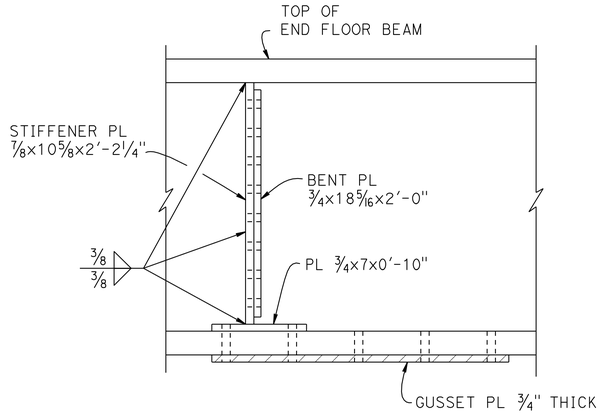

SECTION D-D

1 1/2" = 1'-0"

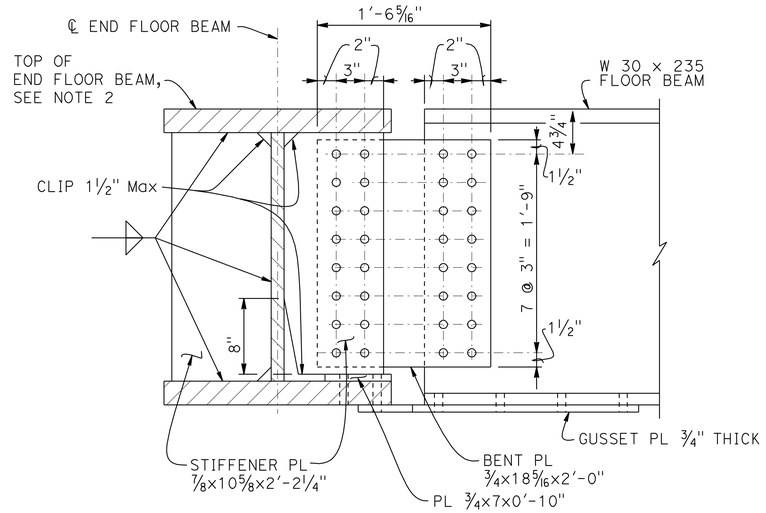

TYPE 2 FB HANGER

SECTION E-E (DEVELOPED)

1 1/2" = 1'-0"

NOTES:

1. FOR LOCATIONS OF SECTIONS D-D, AND E-E, SEE "END FLOOR BEAM DETAILS NO. 1 (SHORT SPANS)" SHEET.
2. TOP OF END FLOOR BEAM SHALL BE FLUSH WITH TOPS OF W 30 x 235 FLOOR BEAMS.
3. FOR TYPE 2 BRACKETS, TOP FLANGES OF ALL END FLOOR BEAMS TO BE SHOP SUBPUNCHED AND FIELD REAMED.
4. FOR LOCATIONS OF DETAIL F, SEE "DECK PLATING LAYOUT" SHEET.

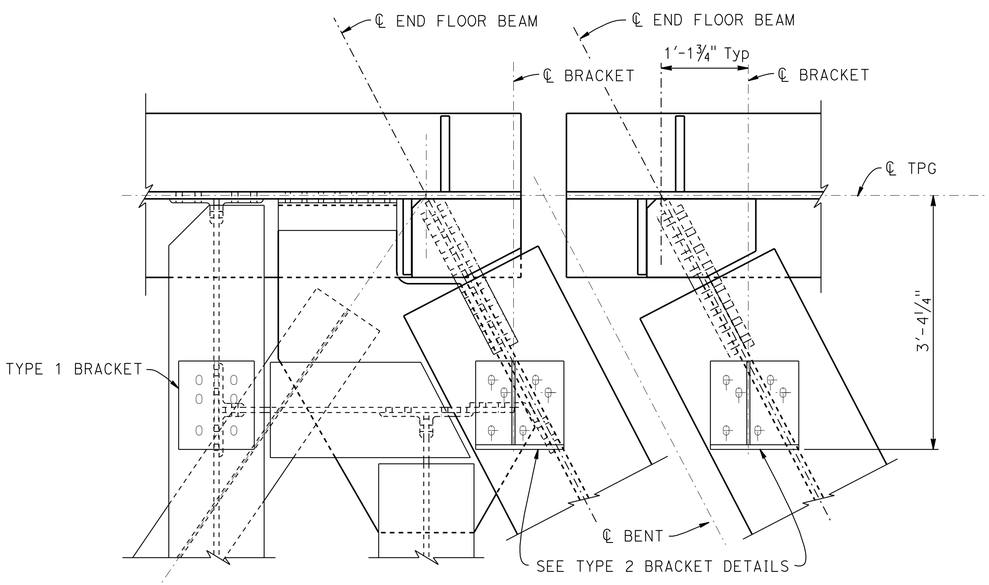

DETAIL F

1" = 1'-0"

-OTHER BOLT HOLES NOT SHOWN FOR CLARITY

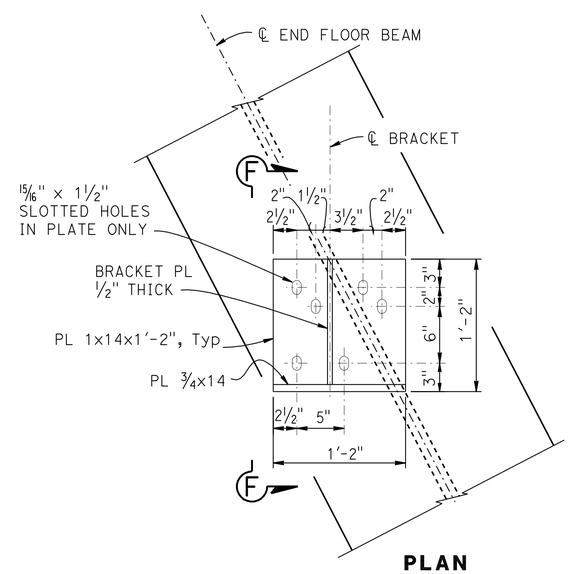

PLAN

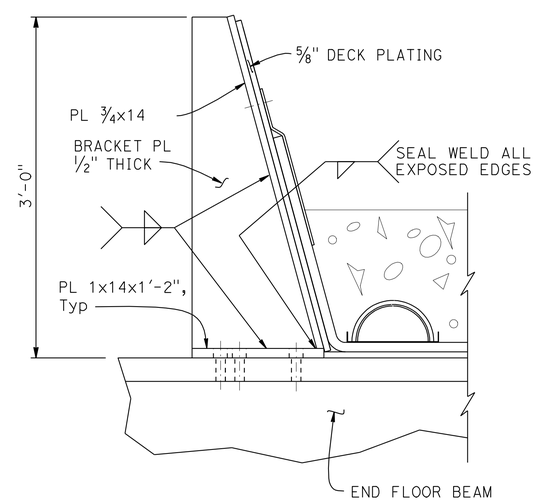

ELEVATION

TYPE 2 BRACKET DETAILS

1 1/2" = 1'-0"

	BY	CHECKED
DESIGN	B. Addlespurger	L. Wu
DETAILS	E. Montevirgen	L. Wu
QUANTITIES	B. Addlespurger	R. Anderson

STATE OF CALIFORNIA
DEPARTMENT OF TRANSPORTATION

DIVISION OF ENGINEERING SERVICES
STRUCTURE DESIGN
DESIGN BRANCH 10

BRIDGE NO. 54-1306
R.R. MILE POST 5.88
LINE SEG. 7602

HIGHGROVE UP (SHOOFLY)

END FLOOR BEAM DETAILS NO. 3 (SHORT SPANS)

STRUCTURES DESIGN DETAIL SHEET (ENGLISH) (REV. 09-01-10)

ORIGINAL SCALE IN INCHES FOR REDUCED PLANS 0 1 2 3

UNIT: 3589
PROJECT NUMBER & PHASE: 08000005061
CONTRACT NO.: 08-0M9401

DISREGARD PRINTS BEARING EARLIER REVISION DATES

REVISION DATES: 9-15-11 11-11-11 2-09-12 4-02-12

SHEET 33 OF 49

FILE => 541306lhendfbdet33.dgn

USERNAME => s124496 DATE PLOTTED => 14-JUN-2012 TIME PLOTTED => 06:19

DIST	COUNTY	ROUTE	POST MILES TOTAL PROJECT	SHEET No.	TOTAL SHEETS
08	Riv,SBd	91,215	21.5/21.7, 43.2/45.2,0.0/5.1	1711	1743

REGISTERED CIVIL ENGINEER — DATE 4-06-12

4-16-12
PLANS APPROVAL DATE

The State of California or its officers or agents shall not be responsible for the accuracy or completeness of electronic copies of this plan sheet.

REGISTERED PROFESSIONAL ENGINEER — LARRY WU No. C57035 Exp. 6-30-13 CIVIL — STATE OF CALIFORNIA

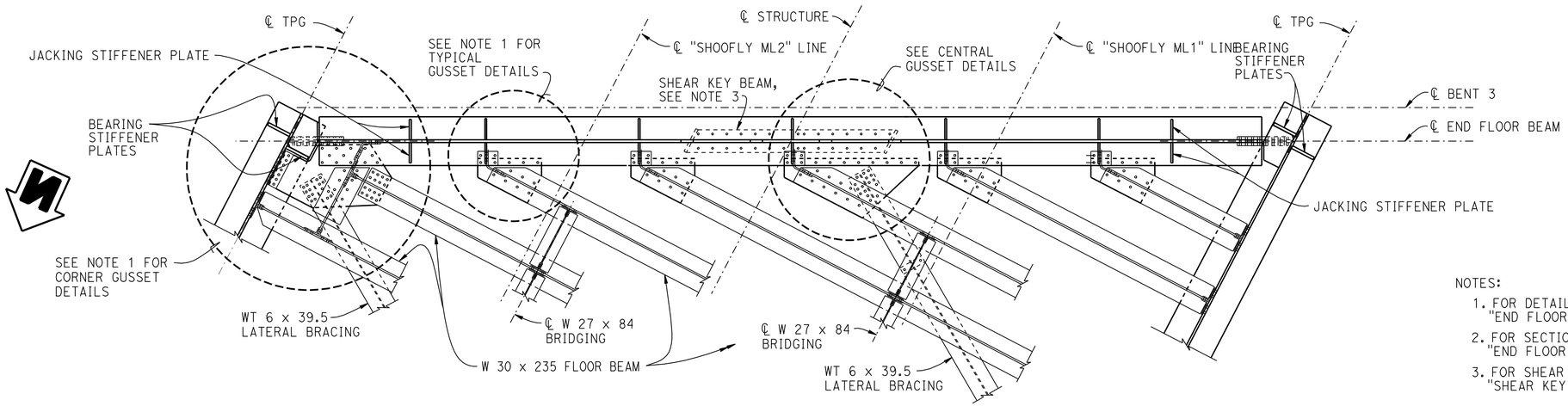

PLAN

3/8" = 1'-0"

-END FLOOR BEAM AT BENT 3 (SPAN 2) SHOWN, END FLOOR BEAMS AT BENT 3 (SPAN 3), BENT 2 (SPAN 2), AND BENT 4 (SPAN 3) ARE SIMILAR EXCEPT AS NOTED

-ONLY BOTTOM FLANGES ARE SHOWN FOR CLARITY

NOTES:

1. FOR DETAILS ON CORNER AND TYPICAL GUSSET, SEE "END FLOOR BEAM DETAILS NO. 1 (SHORT SPANS)" SHEET.
2. FOR SECTIONS D-D AND E-E, SEE "END FLOOR BEAM DETAILS NO. 2 (SHORT SPANS)" SHEET.
3. FOR SHEAR KEY BEAM DETAILS, SEE "SHEAR KEY BEAM LAYOUT" AND "SHEAR KEY BEAM DETAILS" SHEET.

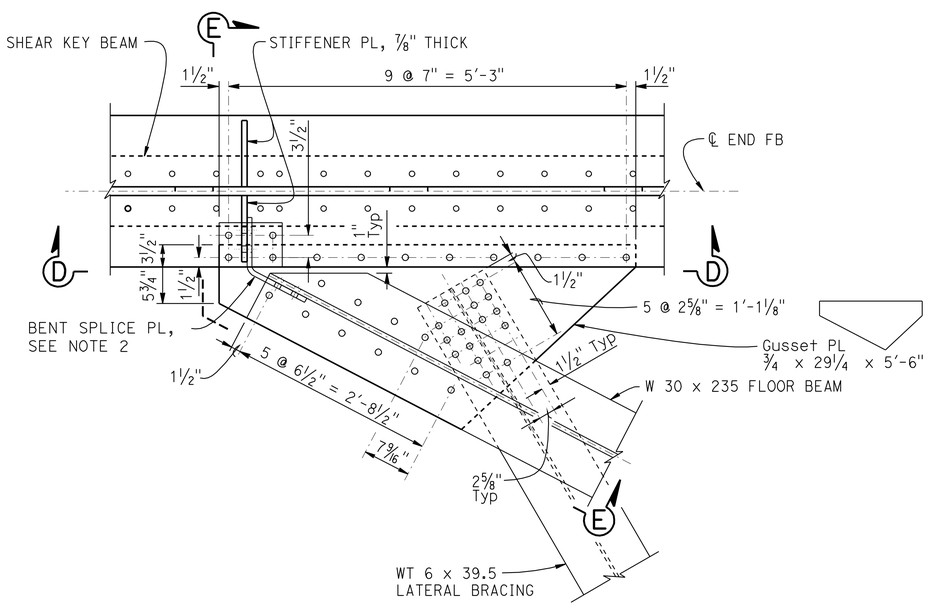

CENTRAL GUSSET DETAILS

1" = 1'-0"

DESIGN	BY B. Addlespurger	CHECKED L. Wu	
DETAILS	BY E. Montevirgen	CHECKED L. Wu	
QUANTITIES	BY B. Addlespurger	CHECKED R. Anderson	

STATE OF CALIFORNIA
DEPARTMENT OF TRANSPORTATION

DIVISION OF ENGINEERING SERVICES
STRUCTURE DESIGN
DESIGN BRANCH 10

BRIDGE NO. 54-1306
R.R. MILE POST 5.88
LINE SEG. 7602

HIGHGROVE UP (SHOOFLY)
END FLOOR BEAM DETAILS NO. 1 (LONG SPANS)

STRUCTURES DESIGN DETAIL SHEET (ENGLISH) (REV. 09-01-10)

ORIGINAL SCALE IN INCHES FOR REDUCED PLANS 0 1 2 3

UNIT: 3589
PROJECT NUMBER & PHASE: 08000005061
CONTRACT NO.: 08-0M9401

DISREGARD PRINTS BEARING EARLIER REVISION DATES

REVISION DATES: 10-30-11 1-26-12 2-09-12 4-02-12

SHEET 34 OF 49

FILE => 541306hlongsp_endfbdet34.dgn

USERNAME => s124396 DATE PLOTTED => 14-JUN-2012 TIME PLOTTED => 06:19

DIST	COUNTY	ROUTE	POST MILES TOTAL PROJECT	SHEET No.	TOTAL SHEETS
08	Riv,SBd	91,215	21.5/21.7, 43.2/45.2,0.0/5.1	1712	1743

REGISTERED CIVIL ENGINEER — DATE 4-06-12

4-16-12
PLANS APPROVAL DATE

REGISTERED PROFESSIONAL ENGINEER — LARRY WU No. C57035 Exp. 6-30-13 CIVIL — STATE OF CALIFORNIA

The State of California or its officers or agents shall not be responsible for the accuracy or completeness of electronic copies of this plan sheet.

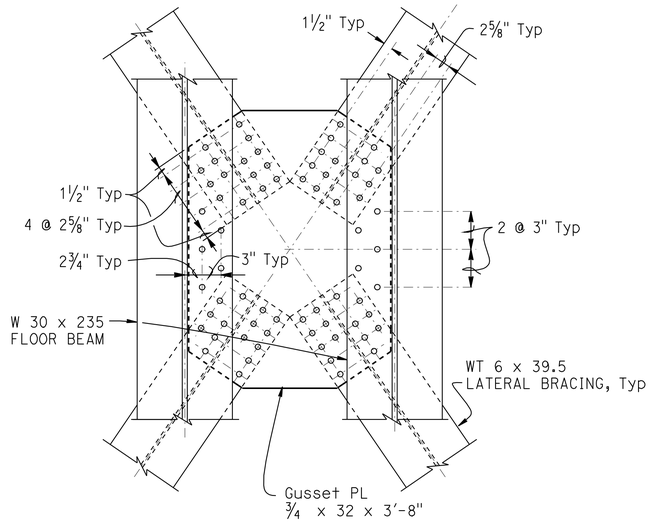

BAY GUSSET DETAILS (SHORT SPANS)

1" = 1'-0"

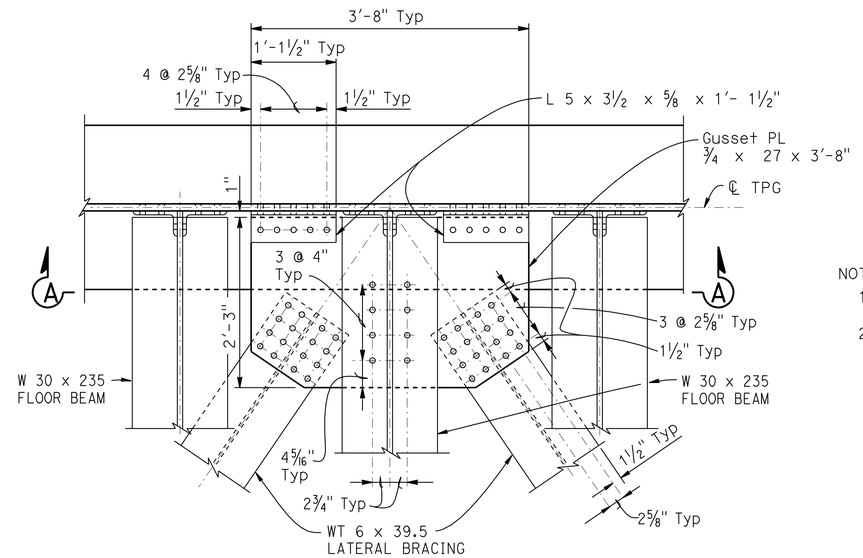

SIDE GUSSET DETAILS (SHORT SPANS)

1" = 1'-0"

NOTES:

1. FOR SECTION A-A, SEE "LATERAL BRACING DETAILS NO. 2" SHEET.
2. FOR LOCATIONS OF BAY GUSSET AND SIDE GUSSET, SEE "GIRDER LAYOUT" SHEETS.

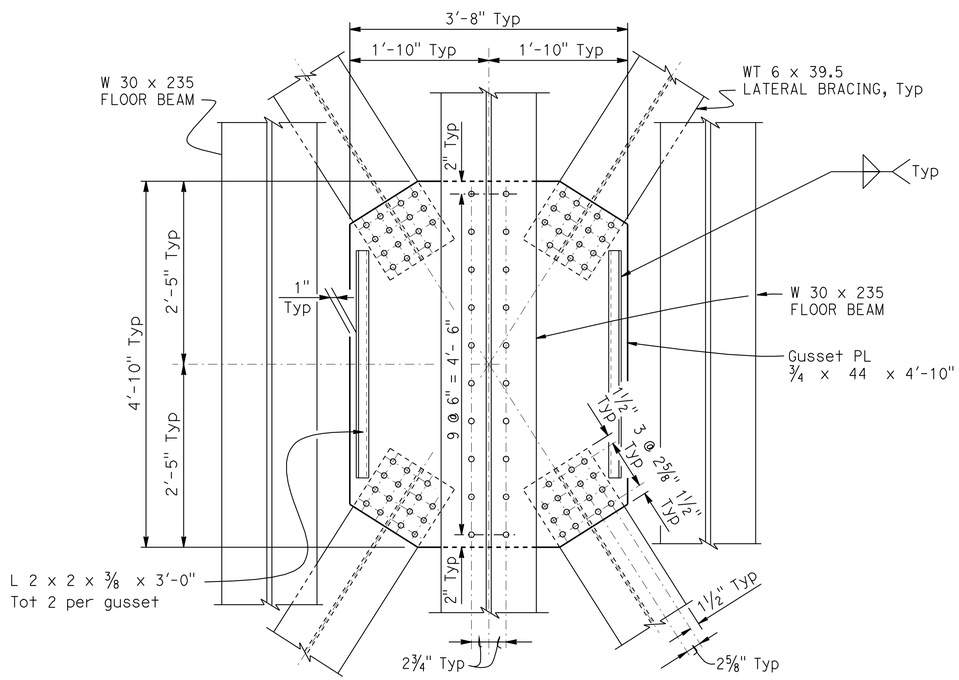

BAY GUSSET DETAILS (LONG SPANS)

1" = 1'-0"

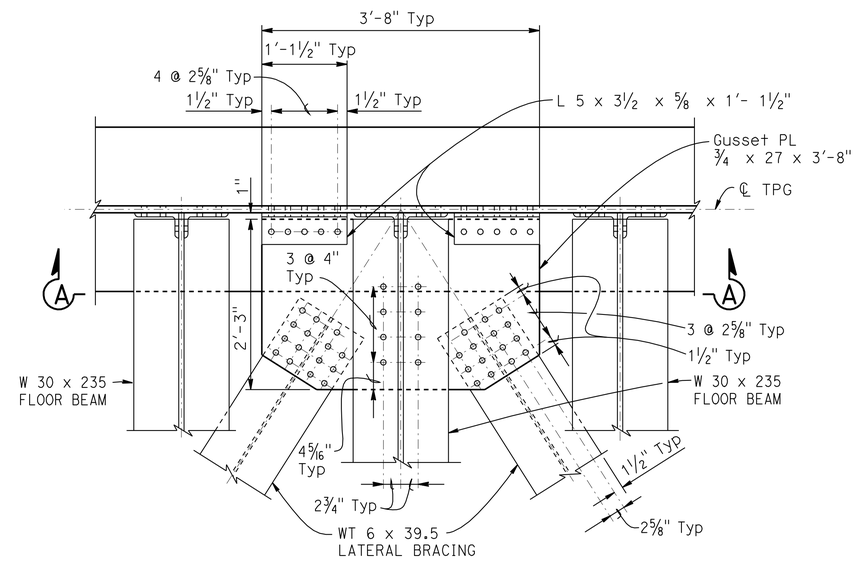

SIDE GUSSET DETAILS (LONG SPANS)

1" = 1'-0"

DESIGN	BY B. Addlespurger	CHECKED L. Wu	
DETAILS	BY E. Montevirgen	CHECKED L. Wu	
QUANTITIES	BY B. Addlespurger	CHECKED R. Anderson	

STATE OF CALIFORNIA
DEPARTMENT OF TRANSPORTATION

DIVISION OF ENGINEERING SERVICES
STRUCTURE DESIGN
DESIGN BRANCH 10

BRIDGE NO. 54-1306
R.R. MILE POST 5.88
LINE SEG. 7602

HIGHGROVE UP (SHOOFLY)
LATERAL BRACING DETAILS NO. 1

STRUCTURES DESIGN DETAIL SHEET (ENGLISH) (REV. 09-01-10)

ORIGINAL SCALE IN INCHES FOR REDUCED PLANS 0 1 2 3

UNIT: 3589
PROJECT NUMBER & PHASE: 08000005061
CONTRACT NO.: 08-0M9401

DISREGARD PRINTS BEARING EARLIER REVISION DATES

REVISION DATES: 9-26-11, 1-26-12, 2-09-12, 4-02-12

SHEET 35 OF 49

FILE => 541306ljlatbracingdet35.dgn

USERNAME => s124496 DATE PLOTTED => 14-JUN-2012 TIME PLOTTED => 08:19

DIST	COUNTY	ROUTE	POST MILES TOTAL PROJECT	SHEET No.	TOTAL SHEETS
08	Riv,SBd	91,215	21.5/21.7, 43.2/45.2,0.0/5.1	1713	1743

REGISTERED CIVIL ENGINEER — DATE 4-06-12

4-16-12
PLANS APPROVAL DATE

REGISTERED PROFESSIONAL ENGINEER — LARRY WU No. C57035 Exp. 6-30-13 CIVIL — STATE OF CALIFORNIA

The State of California or its officers or agents shall not be responsible for the accuracy or completeness of electronic copies of this plan sheet.

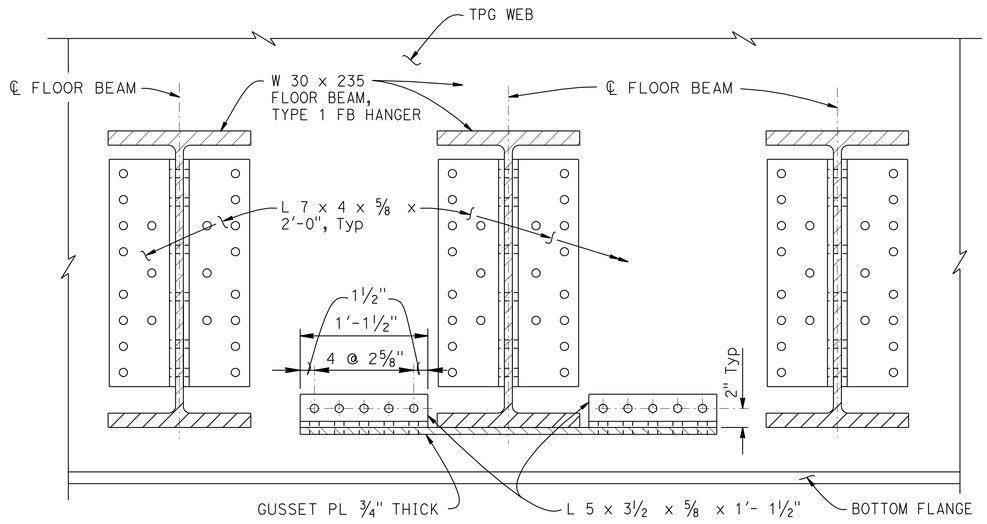

SECTION A-A

1 1/2" = 1'-0"

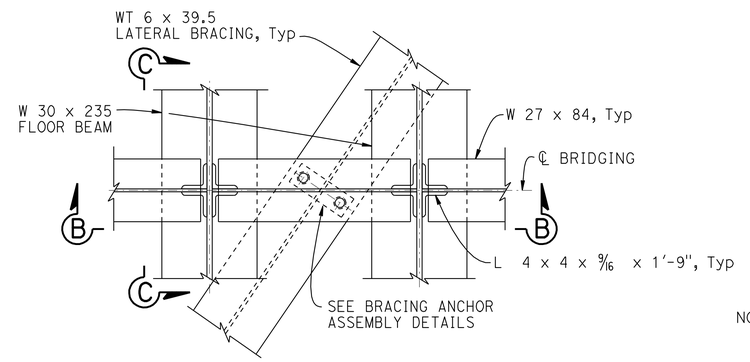

BRIDGING DETAILS

1" = 1'-0"

-ONLY BOTTOM FLANGES ARE SHOWN FOR CLARITY

NOTES:

1. FOR LOCATION OF SECTION A-A, SEE "LATERAL BRACING DETAILS NO. 1" SHEET.

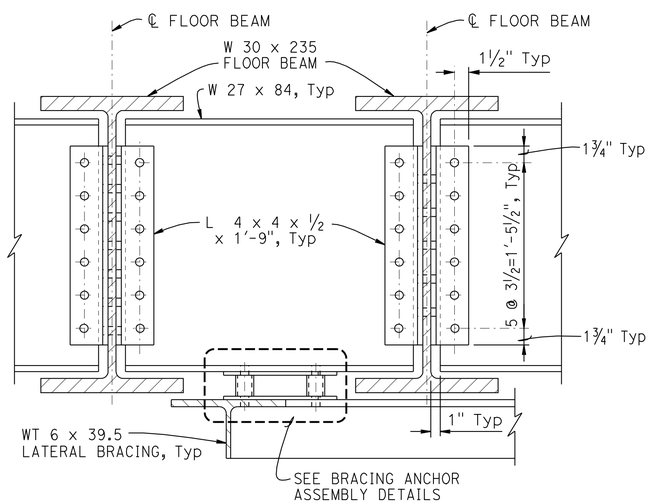

SECTION B-B

1 1/2" = 1'-0"

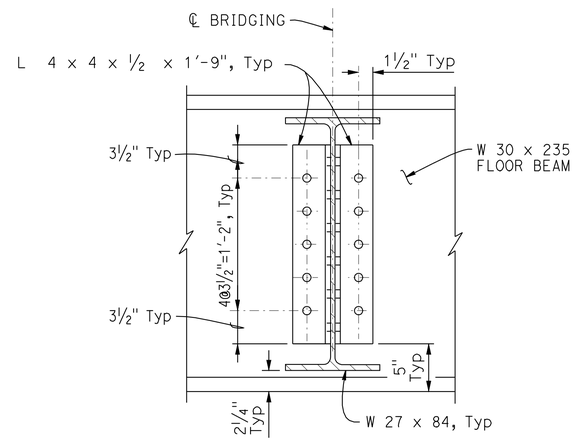

SECTION C-C

1 1/2" = 1'-0"

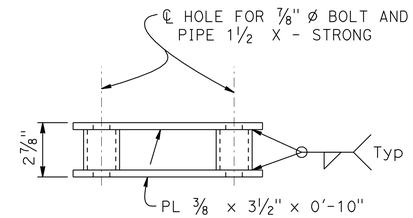

ELEVATION

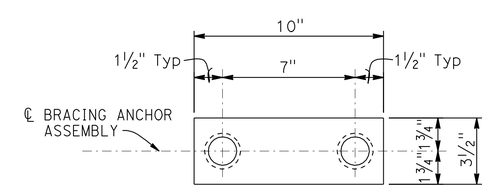

PLAN

BRACING ANCHOR ASSEMBLY DETAILS

3" = 1'-0"

DESIGN	BY B. Addlespurger	CHECKED L. Wu	
DETAILS	BY E. Montevirgen	CHECKED L. Wu	
QUANTITIES	BY B. Addlespurger	CHECKED R. Anderson	

STATE OF CALIFORNIA
DEPARTMENT OF TRANSPORTATION

DIVISION OF ENGINEERING SERVICES
STRUCTURE DESIGN
DESIGN BRANCH 10

BRIDGE NO. 54-1306
R.R. MILE POST 5.88
LINE SEG. 7602

HIGHGROVE UP (SHOOFLY)
LATERAL BRACING DETAILS NO. 2

STRUCTURES DESIGN DETAIL SHEET (ENGLISH) (REV. 09-01-10)

ORIGINAL SCALE IN INCHES FOR REDUCED PLANS 0 1 2 3

UNIT: 3589
PROJECT NUMBER & PHASE: 08000005061
CONTRACT NO.: 08-0M9401

DISREGARD PRINTS BEARING EARLIER REVISION DATES

REVISION DATES: 9-20-11 1-26-12 2-09-12

SHEET 36 OF 49

FILE => 5413061latbracingdet36.dgn

USERNAME => s124496 DATE PLOTTED => 14-JUN-2012 TIME PLOTTED => 06:19

DIST	COUNTY	ROUTE	POST MILES TOTAL PROJECT	SHEET No.	TOTAL SHEETS
08	Riv,SBd	91,215	21.5/21.7, 43.2/45.2,0.0/5.1	1714	1743

REGISTERED CIVIL ENGINEER — DATE 4-06-12

4-16-12
PLANS APPROVAL DATE

REGISTERED PROFESSIONAL ENGINEER — LARRY WU No. C57035 Exp. 6-30-13 CIVIL — STATE OF CALIFORNIA

The State of California or its officers or agents shall not be responsible for the accuracy or completeness of electronic copies of this plan sheet.

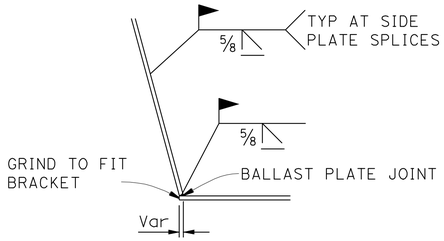

BEVEL DETAIL

1" = 1'-0"

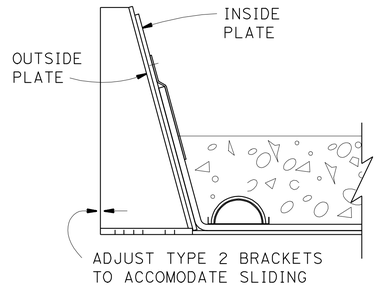

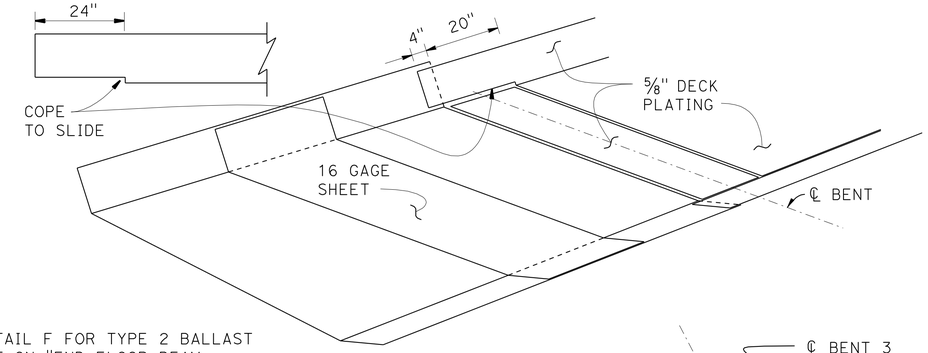

JOINT DETAIL

No Scale

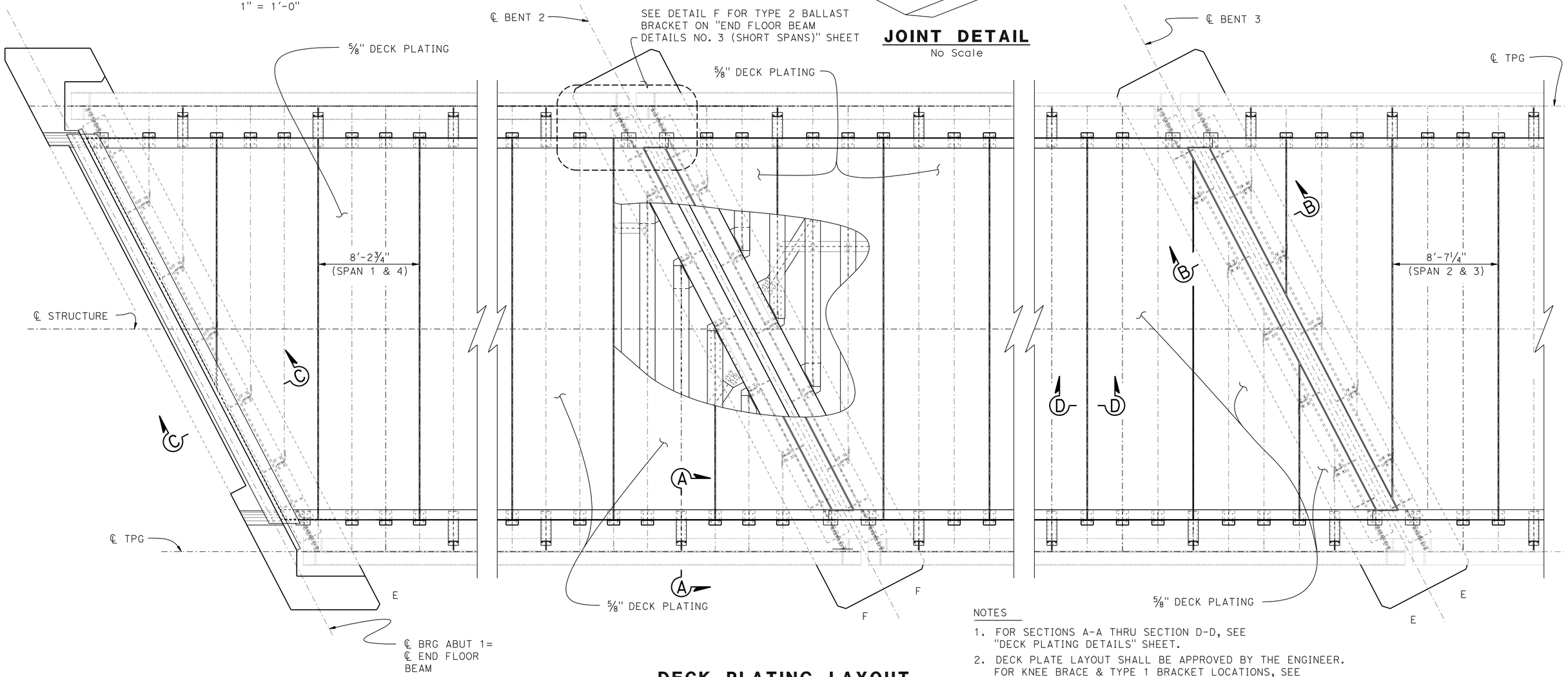

DECK PLATING LAYOUT

¼" = 1'-0"

NOTES

1. FOR SECTIONS A-A THRU SECTION D-D, SEE "DECK PLATING DETAILS" SHEET.
2. DECK PLATE LAYOUT SHALL BE APPROVED BY THE ENGINEER. FOR KNEE BRACE & TYPE 1 BRACKET LOCATIONS, SEE "GIRDER LAYOUT NO.1" & "GIRDER LAYOUT NO. 2" SHEETS.

E DENOTES EXPANSION BRG
F DENOTES FIXED BEARING

	BY	CHECKED
DESIGN	B. Addlespurger	L. Wu
DETAILS	G. Hallstrom/J. Chlubna	L. Wu
QUANTITIES	B. Addlespurger	R. Anderson

STATE OF CALIFORNIA
DEPARTMENT OF TRANSPORTATION

DIVISION OF ENGINEERING SERVICES
STRUCTURE DESIGN
DESIGN BRANCH 10

BRIDGE NO. 54-1306
R.R. MILE POST 5.88
LINE SEG. 7602

HIGHGROVE UP (SHOOFLY)
DECK PLATING LAYOUT

STRUCTURES DESIGN DETAIL SHEET (ENGLISH) (REV. 09-01-10)

ORIGINAL SCALE IN INCHES FOR REDUCED PLANS 0 1 2 3

UNIT: 3589
PROJECT NUMBER & PHASE: 08000005061
CONTRACT NO.: 08-0M9401

DISREGARD PRINTS BEARING EARLIER REVISION DATES

REVISION DATES: 12-8-11 4-02-12

SHEET 37 OF 49

FILE => 541306mgdtdeck_lo37.dgn

USERNAME => s124496 DATE PLOTTED => 14-JUN-2012 TIME PLOTTED => 06:19

DIST	COUNTY	ROUTE	POST MILES TOTAL PROJECT	SHEET No.	TOTAL SHEETS
08	Riv,SBd	91,215	21.5/21.7, 43.2/45.2,0.0/5.1	1715	1743

REGISTERED CIVIL ENGINEER — DATE 4-06-12

4-16-12
PLANS APPROVAL DATE

REGISTERED PROFESSIONAL ENGINEER — LARRY WU No. C57035 Exp. 6-30-13 CIVIL — STATE OF CALIFORNIA

The State of California or its officers or agents shall not be responsible for the accuracy or completeness of electronic copies of this plan sheet.

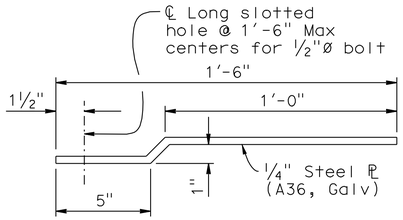

CURB FLASHING DETAIL

3"=1'-0"

NOTES:

1. Weld all around with 5/16" fillet weld in 1"Ø hole in plate. Space holes @ 1'-3" Max
2. For location of "Section A-A" thru "Section D-D", see "DECK PLATING LAYOUT" sheet.
3. Asphalt Panels should be placed as soon as possible after the completion of Membrane Application, but not more than five days later.
4. All Panels shall be bonded to the Membrane and to each other with a complete coat of Semi-Mastic. Asphalt Panels shall be placed while the bond coat is still tacky.
5. All joints between panels shall be laid tight and sealed with Semi-Mastic.
6. Place ballast on deck as soon as possible after Asphalt Panels and Deck Drains have been installed.
7. Waterproofing system shall be 120 mil acrylic based, cold spray applied seamless waterproofing membrane as manufactured by Stirling-Lloyd, 420 Sackett Road, New Haven, Conn 06473, (203) 561-9448. At the option of the Contractor, a similiar spray applied system manufactured by Bridge Preservation. LLC, Kansas City, MO 64171, (816) 561-9996, may be used. Contractor shall submit detailed application procedures, material specifications, and shop drawings for all waterproofing details for approval.

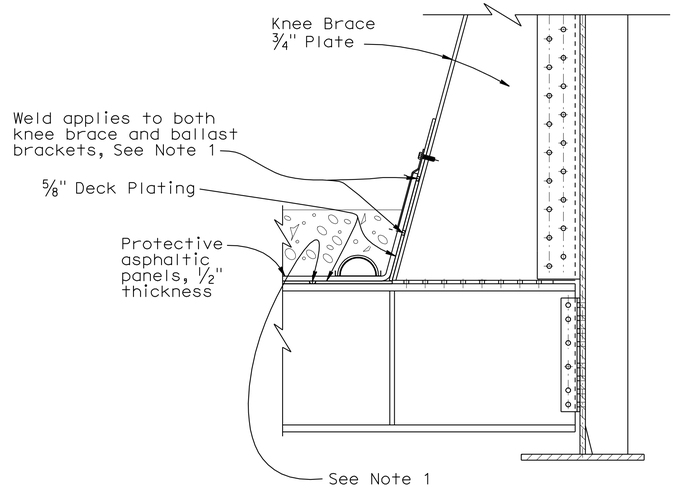

SECTION A-A

NO SCALE

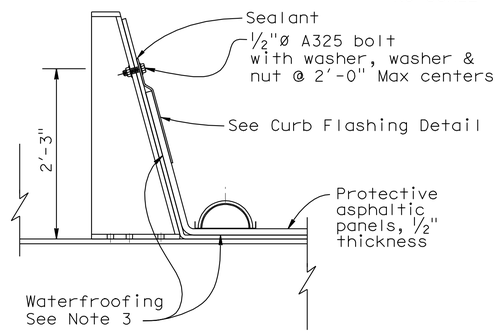

DECK SECTION

1"=1'-0"

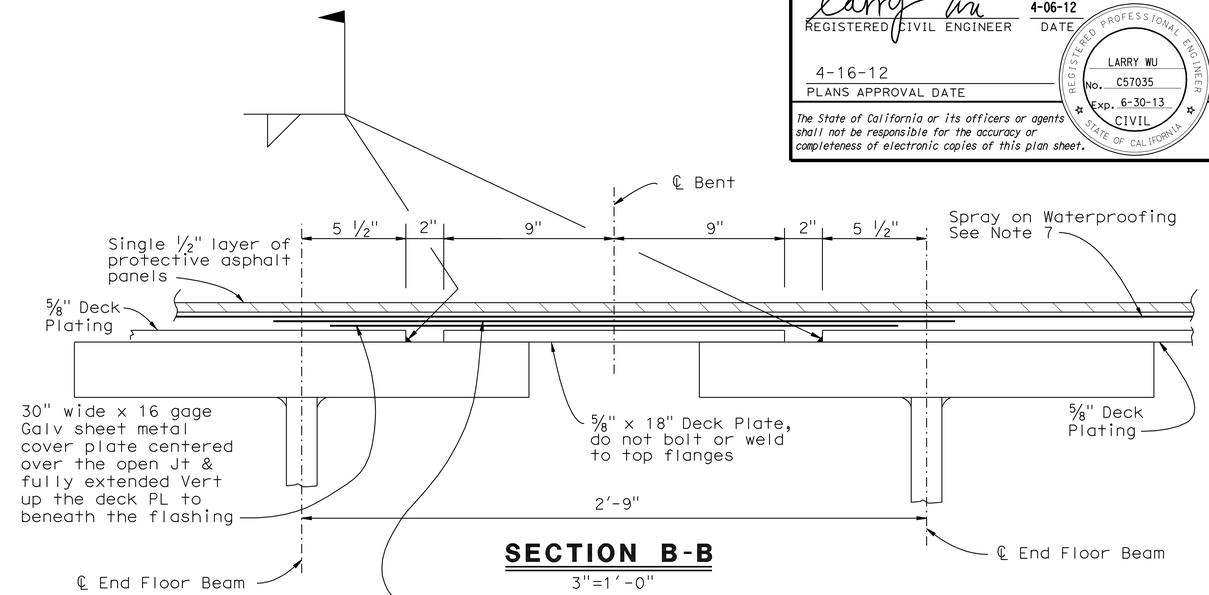

SECTION B-B

3"=1'-0"

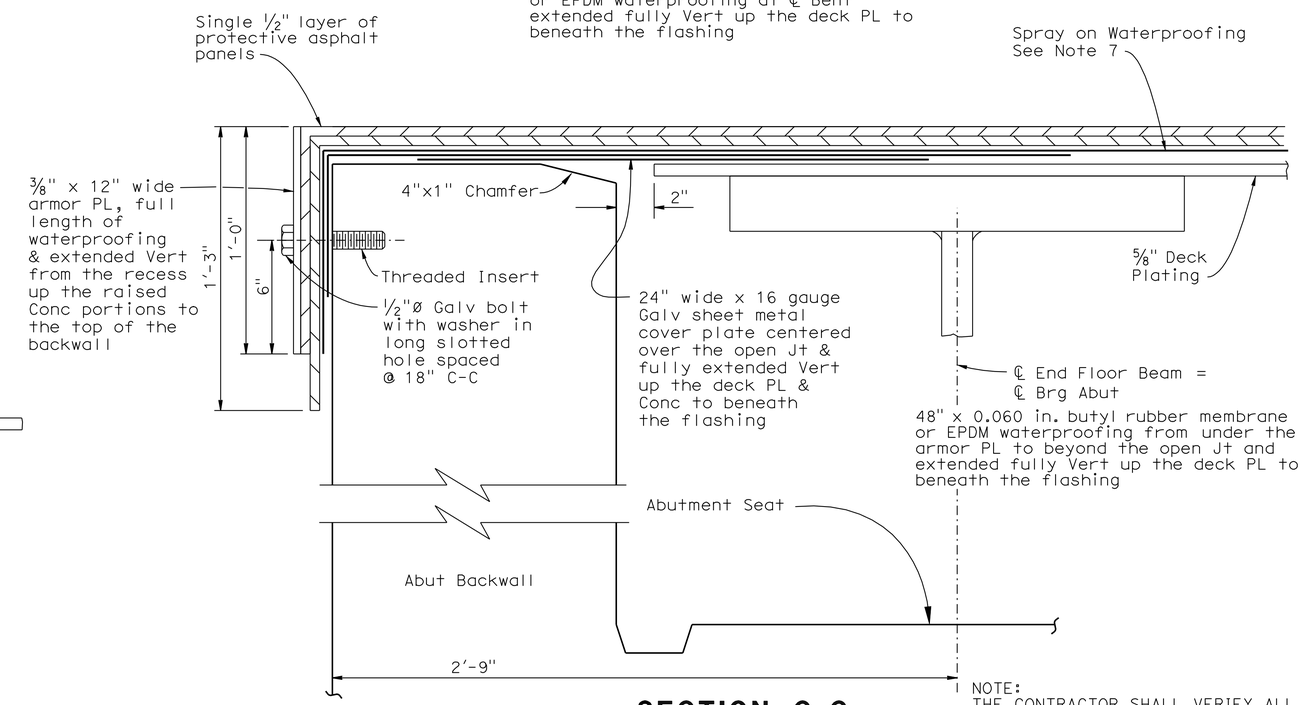

SECTION C-C

3"=1'-0"

NOTE:
THE CONTRACTOR SHALL VERIFY ALL CONTROLLING FIELD DIMENSIONS BEFORE ORDERING OR FABRICATING ANY MATERIAL.

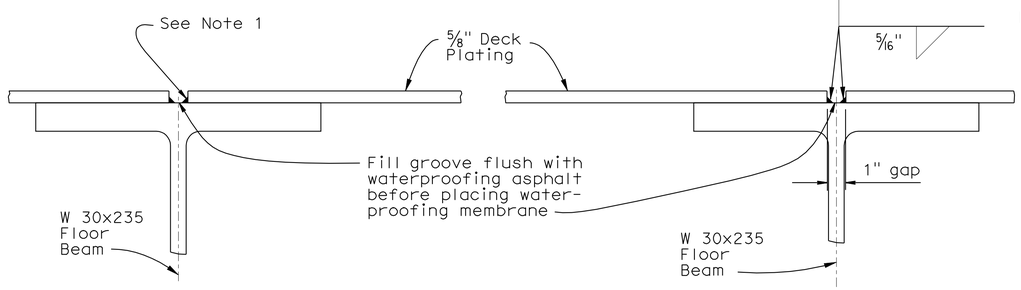

DECK PLATE CONTINUOUS — **SPLICE IN DECK PLATE**

SECTION D-D

3"=1'-0"

DESIGN	BY B. Addlespurger	CHECKED L. Wu	
DETAILS	BY G. Hallstrom/J. Chlubna	CHECKED L. Wu	
QUANTITIES	BY B. Addlespurger	CHECKED R. Anderson	

STATE OF CALIFORNIA
DEPARTMENT OF TRANSPORTATION

DIVISION OF ENGINEERING SERVICES
STRUCTURE DESIGN
DESIGN BRANCH 10

BRIDGE NO. 54-1306
R.R. MILE POST 5.88
LINE SEG. 7602

HIGHGROVE UP (SHOOFLY)
DECK PLATING DETAILS

STRUCTURES DESIGN DETAIL SHEET (ENGLISH) (REV. 09-01-10)

ORIGINAL SCALE IN INCHES FOR REDUCED PLANS 0 1 2 3

UNIT: 3589
PROJECT NUMBER & PHASE: 08000005061
CONTRACT NO.: 08-0M9401

DISREGARD PRINTS BEARING EARLIER REVISION DATES

REVISION DATES: 12-8-11

SHEET 38 OF 49

FILE => 541306mgdtdeckdt38.dgn

USERNAME => s124496 DATE PLOTTED => 14-JUN-2012 TIME PLOTTED => 06:19

DIST	COUNTY	ROUTE	POST MILES TOTAL PROJECT	SHEET No.	TOTAL SHEETS
08	Riv,SBd	91,215	21.5/21.7, 43.2/45.2,0.0/5.1	1716	1743

REGISTERED CIVIL ENGINEER — DATE 4-06-12

4-16-12
PLANS APPROVAL DATE

REGISTERED PROFESSIONAL ENGINEER — LARRY WU No. C57035 Exp. 6-30-13 CIVIL — STATE OF CALIFORNIA

The State of California or its officers or agents shall not be responsible for the accuracy or completeness of electronic copies of this plan sheet.

TABLE FOR PLATE SETTING DATA EXPANSION BRGS POSITION OF SOLE PLATE RELATIVE TO BASE PLATES

TEMP @ TIME OF SETTING	20°F	70°F	120°F
SHORT SPAN ADJUSTMENT ALONG ℄ WEB TPG TOWARDS BENT 2 OR 4	+5/16"	0"	-5/16"
LONG SPAN ADJUSTMENT ALONG ℄ WEB TPG TOWARDS BENT 2 OR 4	+7/16"	0"	-7/16"

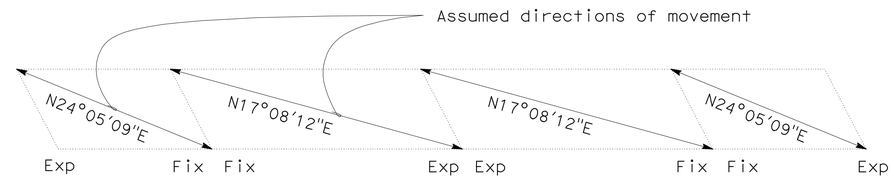

Slotted holes for expansion bearings shall be oriented parallel to assumed direction of movement.

Member	DL (K-ft)	LL (K-ft)	Impact (K-ft)	Fatigue Load Range (K-ft)	Design Load (K-ft)	Section	Allowable Stress (ksi)	Actual Stress (ksi)	Allowable Fatigue Stress Range (ksi)	Actual Fatigue Stress Range (ksi)
End Floor Beam	375	1405	520	1355	2300	built-up	27.50	16.40	10.00	8.60
Typ Floor Beam	465	850	315	990	1630	W30x235	27.50	26.15	16.00	15.80

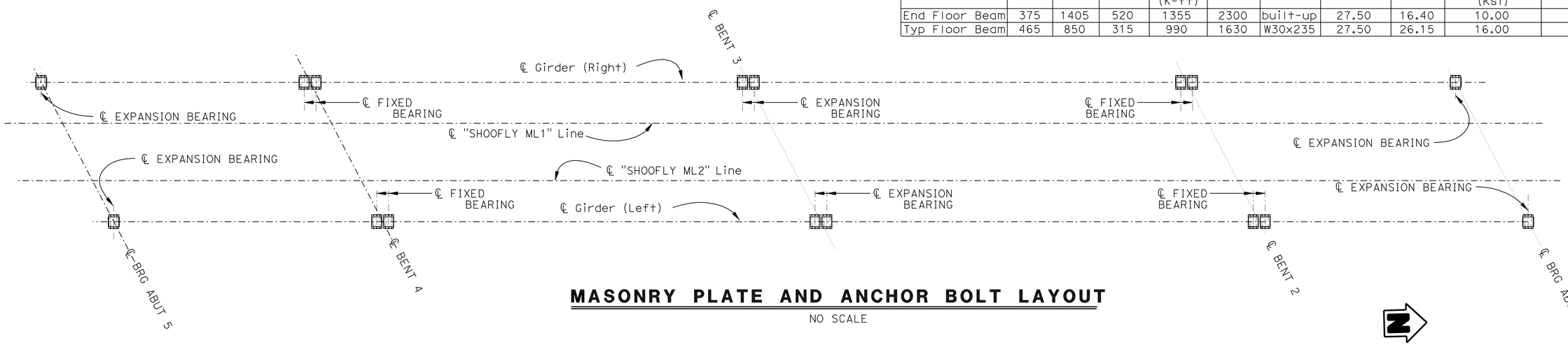

MASONRY PLATE AND ANCHOR BOLT LAYOUT

NO SCALE

CONCRETE ELEVATION DATA

LOCATIONS		ELEVATIONS
(Left) Girder:	Abut 1	935.896
	Bent 2	936.286
	Bent 3	936.576
	Bent 4	936.539
	Abut 5	936.293
(Right) Girder:	Abut 1	935.931
	Bent 2	936.326
	Bent 3	936.624
	Bent 4	936.582
	Abut 5	936.333

BEARING REACTION SHORT SPANS

LOAD	FIXED BEARING (BENT)			EXPANSION BEARING (ABUTMENT)		
	F_V (kips)	F_{long} (kips)	F_{trans} (kips)	F_V (kips)	F_{long} (kips)	F_{trans} (kips)
DL	305	110	95	315	0	110
LL+I	635	150	200	625	0	210
WL	15	20	55	20	0	35
LF	20	350	75	15	0	50
EQ	55	500	510	85	0	400

BEARING REACTION LONG SPANS

LOAD	FIXED BEARING (BENT)			EXPANSION BEARING (ABUTMENT)		
	F_V (kips)	F_{long} (kips)	F_{trans} (kips)	F_V (kips)	F_{long} (kips)	F_{trans} (kips)
DL	410	90	30	340	0	55
LL+I	890	170	70	890	0	165
WL	20	25	60	20	0	45
LF	20	440	60	10	0	40
EQ	55	670	340	50	0	370

NOTES:

1. The welding operation pertaining to the Bearings shall be performed at an ambient temperature between 55°F to 85°F
2. If grouting is performed after welding rocker plate to flange plate, then grout should be placed at the ambient temperature requirement of Note 1.
3. Welds for rocker plates are longitudinal to girder axis only, and may be shop welded. Transverse joints shall be sealed with an approved caulking material.
4. Slotted holes shall be oriented as shown above.
5. Anchorage installation method shown on "BEARING DETAILS" Sht
6. All dimensions shown are steel only, unless otherwise noted.
7. All bearings shall be marked prior to shipping. The marks shall indicate the bearing location and direction on the bridge, and a direction arrow that points up station. All marks shall be permanent and visible after the bearing is installed.

	BY	CHECKED
DESIGN	B Addlespurger	Larry Wu
DETAILS	B Addlespurger	Larry Wu
QUANTITIES	B Addlespurger	Renee Anderson

STATE OF CALIFORNIA
DEPARTMENT OF TRANSPORTATION

DIVISION OF ENGINEERING SERVICES
STRUCTURE DESIGN
DESIGN BRANCH 10

BRIDGE NO. 54-1306
R.R. MILE POST 5.88
LINE SEG. 7602

HIGHGROVE UP (SHOOFLY)
BEARING LAYOUT

STRUCTURES DESIGN DETAIL SHEET (ENGLISH) (REV. 09-01-10)

ORIGINAL SCALE IN INCHES FOR REDUCED PLANS 0 1 2 3

UNIT: 3589
PROJECT NUMBER & PHASE: 08000005061
CONTRACT NO.: 08-0M9401

DISREGARD PRINTS BEARING EARLIER REVISION DATES

REVISION DATES: 12-8-11 12-21-11

SHEET 39 OF 49

FILE => 541306qbearingaio39.dgn

USERNAME => s124496 DATE PLOTTED => 14-JUN-2012 TIME PLOTTED => 06:20

DIST	COUNTY	ROUTE	POST MILES TOTAL PROJECT	SHEET No.	TOTAL SHEETS
08	Riv,SBd	91,215	21.5/21.7, 43.2/45.2,0.0/5.1	1717	1743

REGISTERED CIVIL ENGINEER 4-06-12 DATE

4-16-12
PLANS APPROVAL DATE

REGISTERED PROFESSIONAL ENGINEER LARRY WU No. C57035 Exp. 6-30-13 CIVIL STATE OF CALIFORNIA

The State of California or its officers or agents shall not be responsible for the accuracy or completeness of electronic copies of this plan sheet.

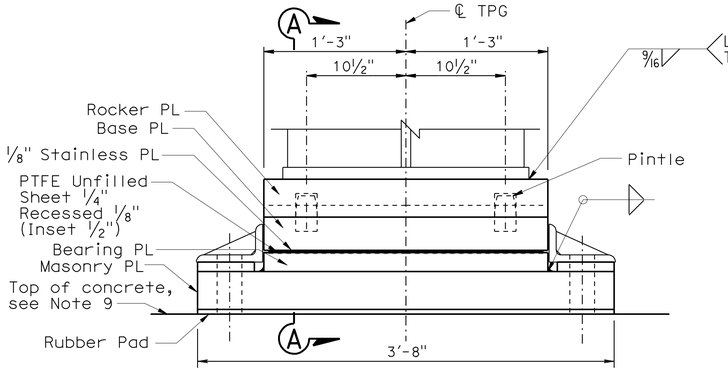

EXPANSION BEARING

Abut shown, Bent similar

1½" = 1'-0"

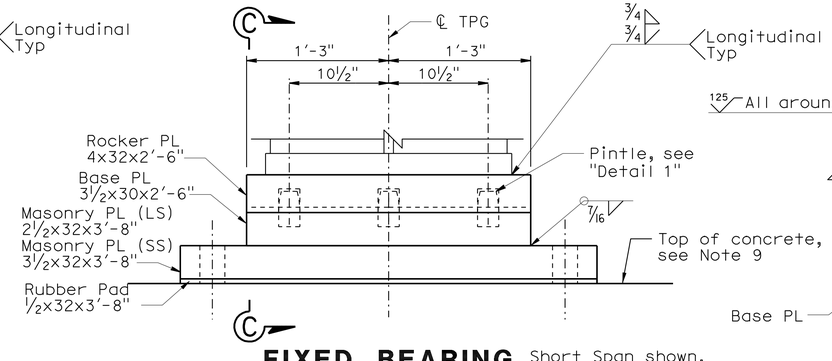

FIXED BEARING

Short Span shown, Long Span similar

1½" = 1'-0"

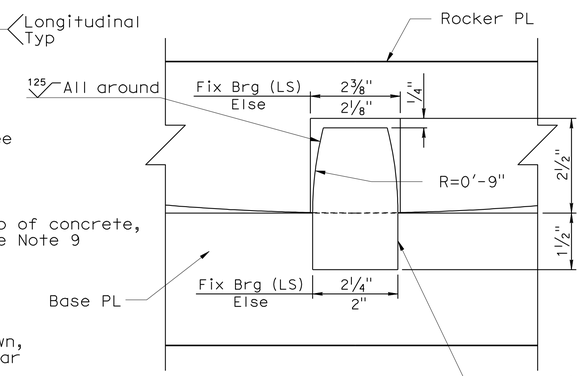

DETAIL 1

6" = 1'-0"

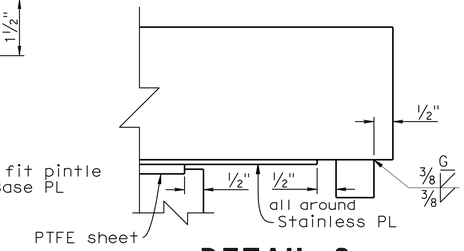

DETAIL 2

6" = 1'-0"

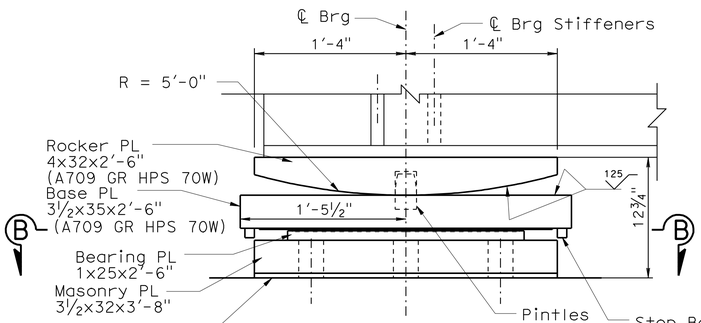

SECTION A-A

1½" = 1'-0"

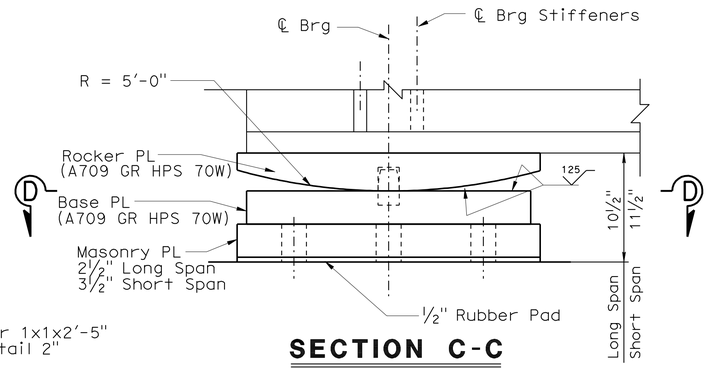

SECTION C-C

1½" = 1'-0"

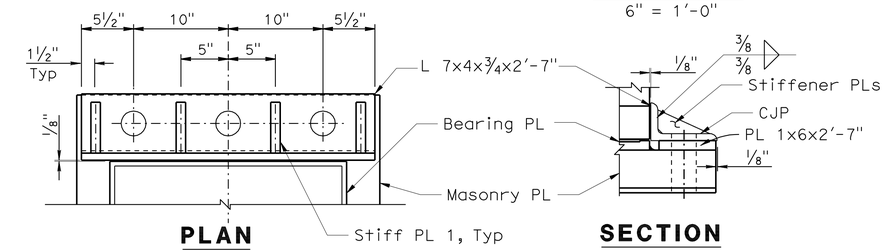

PLAN

SECTION

DETAIL 4

1½" = 1'-0"

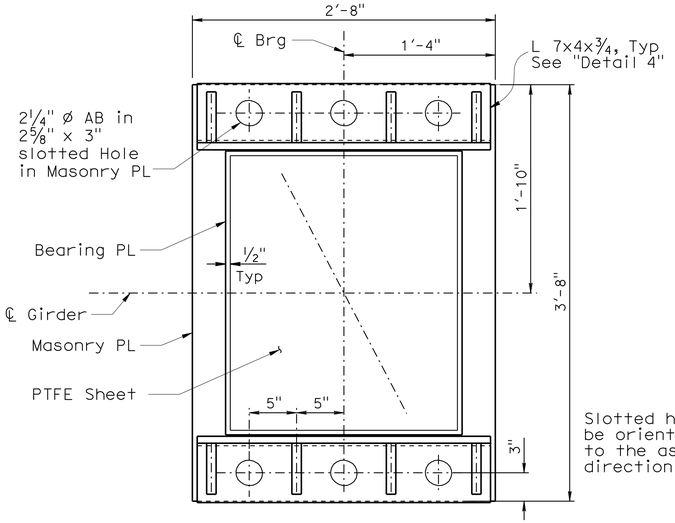

BRG PL VIEW B-B

1½" = 1'-0"

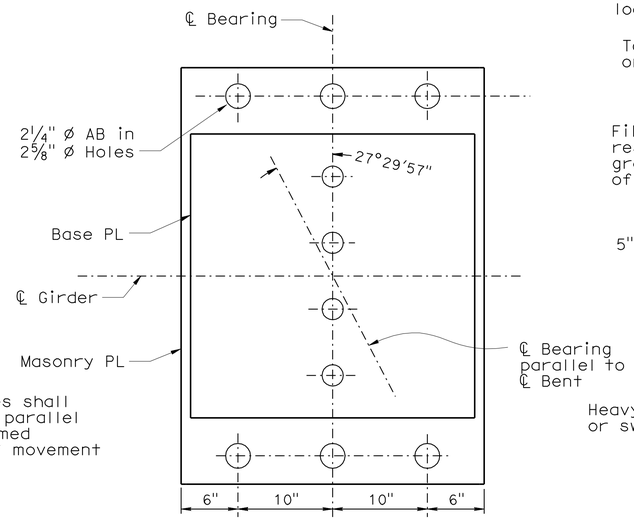

BASE PL VIEW D-D

1½" = 1'-0"

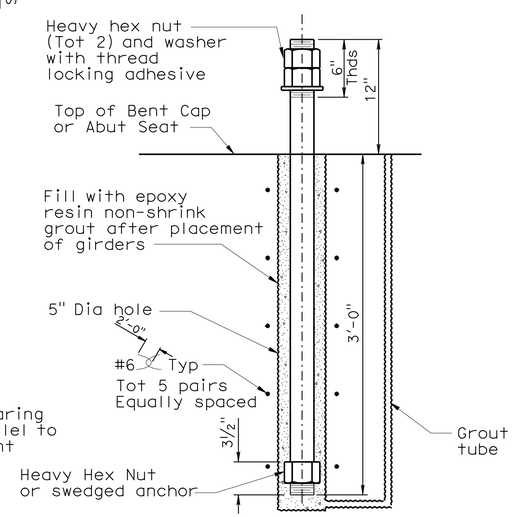

ANCHOR ROD

DETAIL 3

1½" = 1'-0"

NOTES:

1. All materal shall conform to ASTW A709 Gr50W unless otherwise noted.
2. All weld assemblies shall be stress relieved after fabrication in accordance with bridge welding code AWS D1.5.
3. Fabrication tolerances, packing, handling, storage, and installation of bearings shall conform to AREMA Manual, Chapter 15 Part 11.
4. Steel including anchor rods and nuts shall be painted per specifications.
5. Pintles shall conform to ASTM A354 BD, Anchor Rods shall conform to ASTM F1554 Gr 105, and nuts shall conform to ASTM A563 DH heavy hex.
6. PTFE sheet shall conform to AREMA Chapter 15, Sections 10.5 and 11.4.
7. Stainless steel sliding surface shall conform to AREMA Chapter 15, Section 10.5.
8. Rubber pad shall be natural rubber with Shore A hardness 50 and shall conform to AREMA Chapter 15, Section 10.6.
9. Concrete surface under Rubber Pad to be ground to a smooth level plane to give even bearing.
10. The minimum dead load for friction coefficient proof test shall be 250Kips. The maximum vertical load for compression proof test shall be 1300kips.

NOTE:
THE CONTRACTOR SHALL VERIFY ALL CONTROLLING FIELD DIMENSIONS BEFORE ORDERING OR FABRICATING ANY MATERIAL.

	BY	CHECKED
DESIGN	B. Addlespurger	L. Wu
DETAILS	Y. Tang/G. Hallstrom	L. Wu
QUANTITIES	B. Addlespurger	R. Anderson

STATE OF CALIFORNIA
DEPARTMENT OF TRANSPORTATION

DIVISION OF ENGINEERING SERVICES
STRUCTURE DESIGN
DESIGN BRANCH 10

BRIDGE NO. 54-1306
R.R. MILE POST 5.88
LINE SEG. 7602

HIGHGROVE UP (SHOOFLY)
BEARING DETAILS

STRUCTURES DESIGN DETAIL SHEET (ENGLISH) (REV. 09-01-10)

ORIGINAL SCALE IN INCHES FOR REDUCED PLANS 0 1 2 3

UNIT: 3589
PROJECT NUMBER & PHASE: 08000005061
CONTRACT NO.: 08-0M9401

DISREGARD PRINTS BEARING EARLIER REVISION DATES

REVISION DATES: 1-23-12 1-24-12 3-28-12 4-06-12

SHEET 40 OF 49

FILE => 541306qbearingdt40.dgn

USERNAME => s124496 DATE PLOTTED => 14-JUN-2012 TIME PLOTTED => 06:20

DIST	COUNTY	ROUTE	POST MILES TOTAL PROJECT	SHEET No.	TOTAL SHEETS
08	Riv,SBd	91,215	21.5/21.7, 43.2/45.2,0.0/5.1	1718	1743

REGISTERED CIVIL ENGINEER — DATE 4-06-12

4-16-12
PLANS APPROVAL DATE

REGISTERED PROFESSIONAL ENGINEER — LARRY WU No. C57035 Exp. 6-30-13 CIVIL — STATE OF CALIFORNIA

The State of California or its officers or agents shall not be responsible for the accuracy or completeness of electronic copies of this plan sheet.

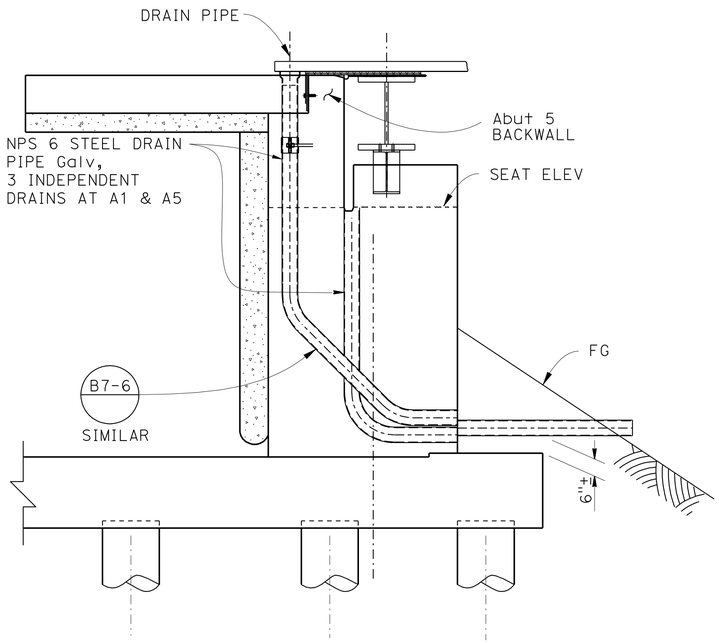

SECTION A-A

3/8"=1'-0"

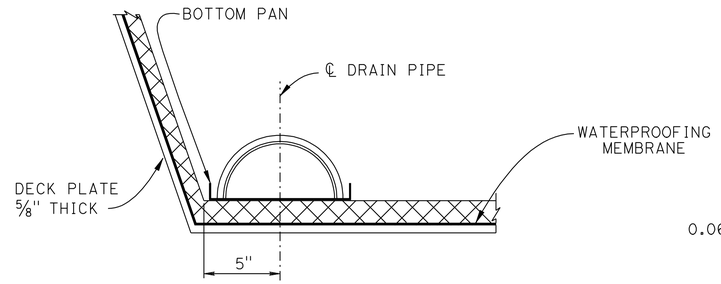

TYPICAL DRAIN SECTION

NO SCALE

NOTE:
Welded pieces shall be hot-dipped Galvanized after fabrication

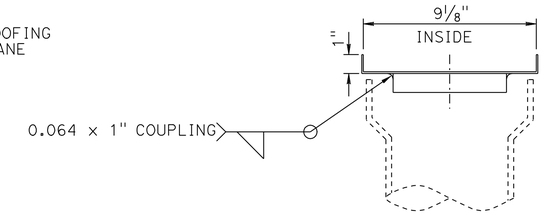

VIEW B-B

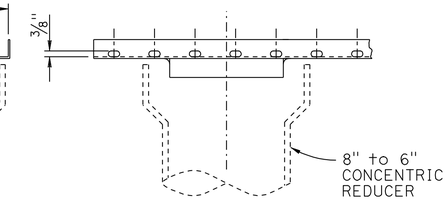

VIEW C-C

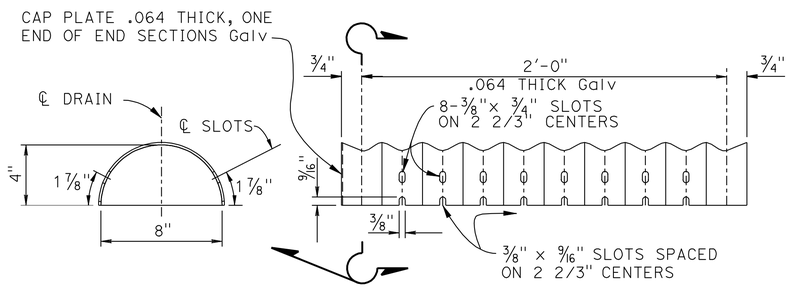

DETAIL - DRAIN PIPE

NO SCALE

NOTE:
Lap Drain Pipe one corrugation at each end

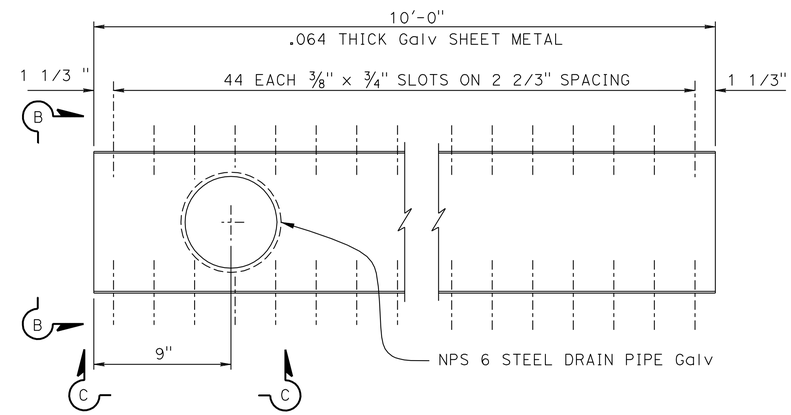

DETAIL - BOTTOM PAN

NO SCALE

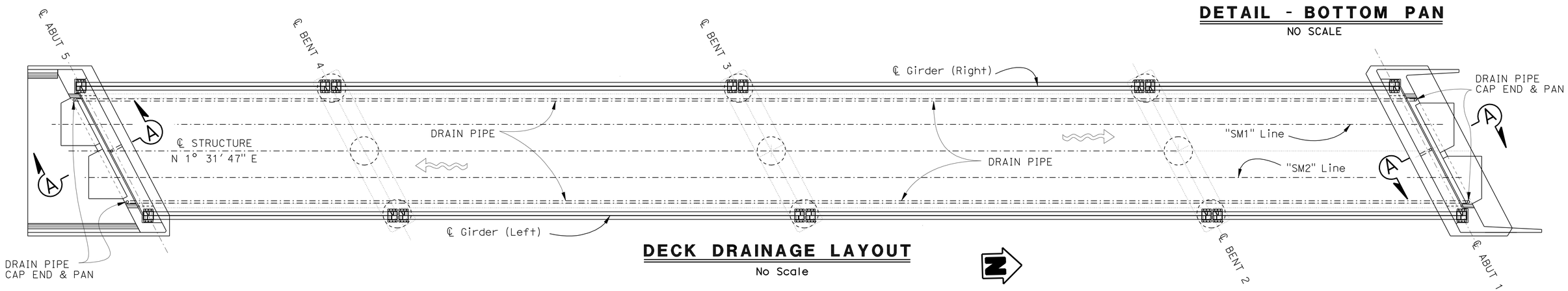

DECK DRAINAGE LAYOUT

No Scale

DESIGN	BY B. Addlespurger	CHECKED L. Wu	
DETAILS	BY G. Hallstrom/J. Chlubna	CHECKED L. Wu	
QUANTITIES	BY B. Addlespurger	CHECKED R. Anderson	

STATE OF CALIFORNIA
DEPARTMENT OF TRANSPORTATION

DIVISION OF ENGINEERING SERVICES
STRUCTURE DESIGN
DESIGN BRANCH 10

BRIDGE NO. 54-1306
R.R. MILE POST 5.88
LINE SEG. 7602

HIGHGROVE UP (SHOOFLY)
DECK DRAINAGE LAYOUT AND DETAILS

STRUCTURES DESIGN DETAIL SHEET (ENGLISH) (REV. 09-01-10)

ORIGINAL SCALE IN INCHES FOR REDUCED PLANS 0 1 2 3

UNIT: 3589
PROJECT NUMBER & PHASE: 08000005061
CONTRACT NO.: 08-0M9401

DISREGARD PRINTS BEARING EARLIER REVISION DATES

REVISION DATES 12-8-11 12-21-11

SHEET 41 OF 49

FILE => 541306rdrainage41.dgn

USERNAME => s124496 DATE PLOTTED => 14-JUN-2012 TIME PLOTTED => 06:20

DIST	COUNTY	ROUTE	POST MILES TOTAL PROJECT	SHEET No.	TOTAL SHEETS
08	Riv,SBd	91,215	21.5/21.7, 43.2/45.2,0.0/5.1	1719	1743

REGISTERED CIVIL ENGINEER 4-06-12 DATE

4-16-12
PLANS APPROVAL DATE

REGISTERED PROFESSIONAL ENGINEER LARRY WU No. C57035 Exp. 6-30-13 CIVIL STATE OF CALIFORNIA

The State of California or its officers or agents shall not be responsible for the accuracy or completeness of electronic copies of this plan sheet.

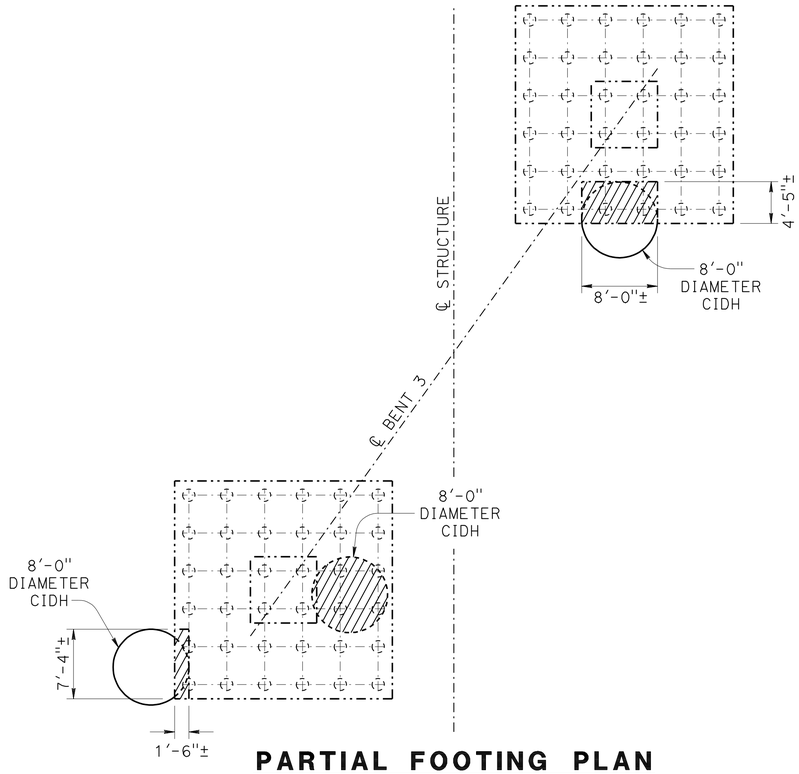

PARTIAL FOOTING PLAN

1/8" = 1'-0"

NOTE: All dimensions are approximate.

LEGEND:

Indicates existing structure

Indicates limits of Bridge Removal

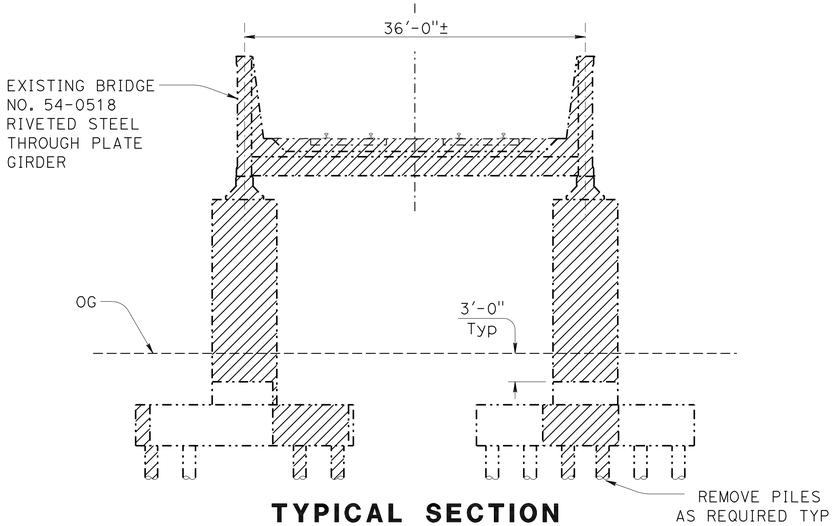

TYPICAL SECTION (HIGHGROVE UP)

1/8" = 1'-0"

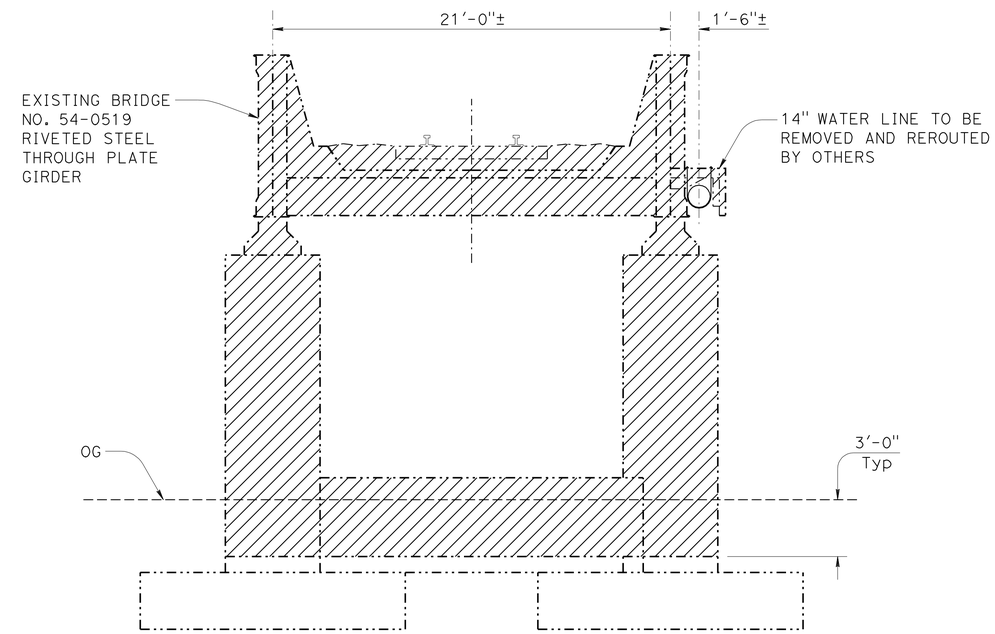

TYPICAL SECTION (GRAND TERRACE UP)

1/4" = 1'-0"

	BY	CHECKED
DESIGN	B. Addlespurger	L. Wu
DETAILS	P. Silva	L. Wu
QUANTITIES	B. Addlespurger	R. Anderson

STATE OF CALIFORNIA DEPARTMENT OF TRANSPORTATION

DIVISION OF ENGINEERING SERVICES STRUCTURE DESIGN DESIGN BRANCH 10

BRIDGE NO. 54-1306
R.R. MILE POST 5.88
LINE SEG. 7602

HIGHGROVE UP (REPLACE)
BRIDGE REMOVAL

STRUCTURES DESIGN DETAIL SHEET (ENGLISH) (REV. 09-01-10)

ORIGINAL SCALE IN INCHES FOR REDUCED PLANS 0 1 2 3

UNIT: 3589
PROJECT NUMBER & PHASE: 08000005061 CONTRACT NO.: 08-0M9401

DISREGARD PRINTS BEARING EARLIER REVISION DATES

REVISION DATES 3-14-12

SHEET 42 OF 49

FILE => 541306ruremoval_42.dgn

USERNAME => s124496 DATE PLOTTED => 18-APR-2012 TIME PLOTTED => 08:09

DIST	COUNTY	ROUTE	POST MILES TOTAL PROJECT	SHEET No	TOTAL SHEETS
08	Riv,SBd	91,215	21.5/21.7, 43.2/45.2,0.0/5.1	1720	1743

PROFESSIONAL GEOLOGIST 1-18-12

4-16-12
PLANS APPROVAL DATE

PROFESSIONAL GEOLOGIST Hector Valencia No. 7776 Exp. 2-28-14 STATE OF CALIFORNIA

The State of California or its officers or agents shall not be responsible for the accuracy or completeness of electronic copies of this plan sheet.

This LOTB sheet was prepared in accordance with the Caltrans Soil & Rock Logging, Classification, & Presentation Manual (2010 Edition).

BENCH MARK

PNO 630
N 1,832,297.50
E 6,763,657.81
1" IP W/CALTRANS RP PLUG
Elev 938.24'
Vertical Datum: NAVD88

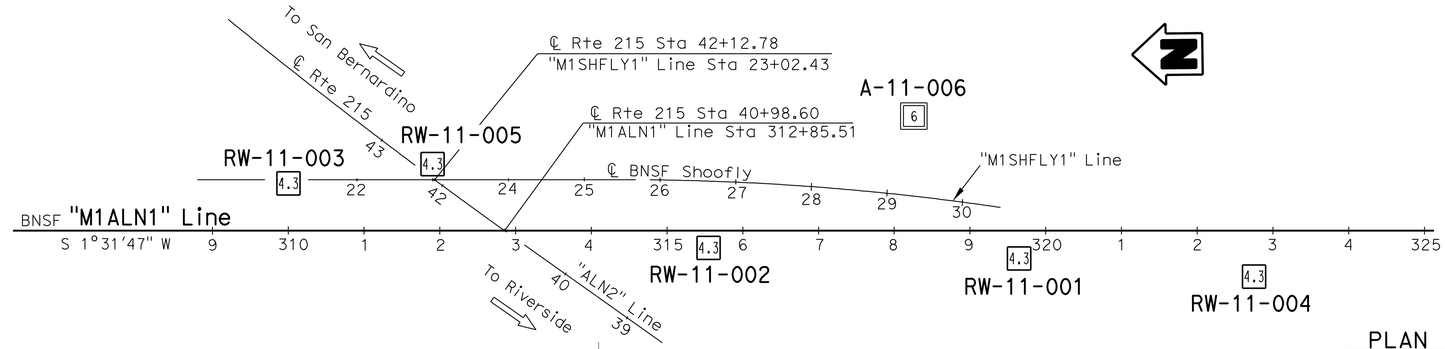

PLAN
1" = 100'

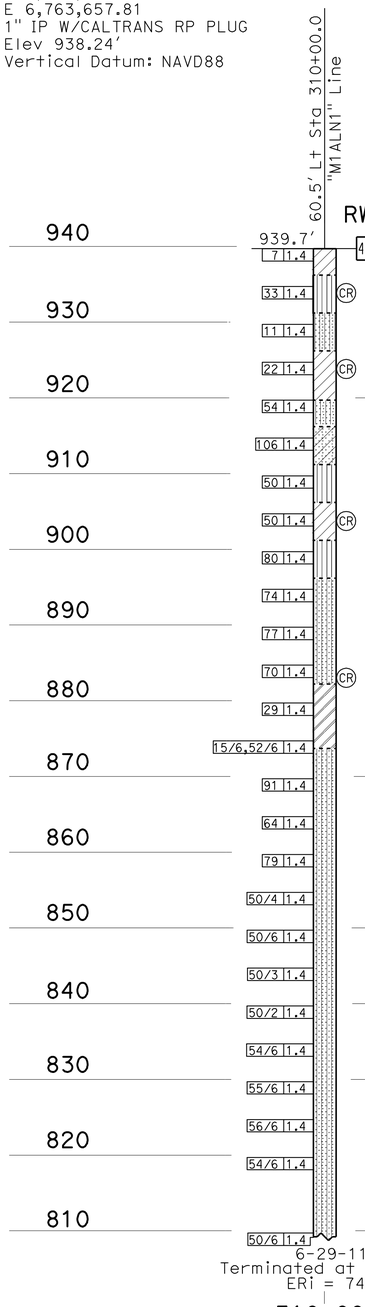

Lean CLAY with SAND (CL); very stiff; brown; moist; little fine and medium SAND; trace fine GRAVEL; PP=3.5 tsf.

SILT with SAND (ML); dense; brown; moist; little fine and medium SAND; trace fine GRAVEL.

SILTY SAND (SM); medium dense; brown; moist; fine and medium SAND; some fines; trace fine GRAVEL.

Lean CLAY with SAND (CL); very stiff; brown; moist; little fine and medium SAND; PP=3.0 tsf.

SILTY SAND (SM); very dense; brown; moist; from fine to coarse SAND; some fines; trace fine GRAVEL.

CLAYEY SAND (SC); very dense; brown; moist; from fine to coarse SAND; some fines.

SILT with SAND (ML); very dense; yellowish brown; moist; little fine SAND.

SANDY CLAY (CL); very stiff; brown; moist; some from fine to coarse SAND; PP=3.0 tsf.

SILT with SAND (ML); very dense; yellowish brown; moist; little fine SAND.

SILTY SAND (SM); very dense; yellowish brown; moist; mostly fine and medium SAND; some fines; trace coarse SAND; trace fine GRAVEL.

-light yellowish brown.

Fat CLAY with SAND (CH); very stiff; yellowish brown; moist; little fine SAND; PP=2.0 tsf.

SILTY SAND (SM); very dense; light olive brown; moist; from fine to coarse SAND; little fines; few fine and coarse GRAVEL.

-mostly fine SAND.

-mostly from fine to coarse SAND.

-mostly fine and medium SAND.

-mostly from fine to coarse SAND.

-mostly fine and medium SAND.

-mostly from fine to coarse SAND.

-mostly fine to medium SAND.

Note: Groundwater was not encountered in Borings RW-11-001, RW-11-002, RW-11-003, RW-11-004, A-11-006. Groundwater was encountered in Boring RW-11-005.

PROFILE
Horiz: 1" = 10'
Vert: 1" = 10'

ENGINEERING SERVICES	MATERIALS AND GEOTECHNICAL SERVICES	STATE OF CALIFORNIA DEPARTMENT OF TRANSPORTATION	DIVISION OF ENGINEERING SERVICES STRUCTURE DESIGN DESIGN BRANCH 10	BRIDGE NO. 54-1306 R.R. MILE POST 5.88 LINE SEG. 7602	HIGHGROVE UP (SHOOFLY) LOG OF TEST BORINGS 1 OF 7
FUNCTIONAL SUPERVISOR NAME: M. DeSalvatore	DRAWN BY: W. Tang 09/11 CHECKED BY: S. Logeswaran	FIELD INVESTIGATION BY: H. Valencia			

OGS CIVIL LOG OF TEST BORINGS SHEET

ORIGINAL SCALE IN INCHES FOR REDUCED PLANS 0 1 2 3

UNIT: 3643
PROJECT NUMBER & PHASE: 08000005061 CONTRACT NO.: 08-0M9401

DISREGARD PRINTS BEARING EARLIER REVISION DATES

REVISION DATES 01-09-12 01-13-12 01-17-12

SHEET 43 OF 49

FILE => 541306rzltb43.dgn

USERNAME => s124496 DATE PLOTTED => 18-APR-2012 TIME PLOTTED => 08:09

DIST	COUNTY	ROUTE	POST MILES TOTAL PROJECT	SHEET No	TOTAL SHEETS
08	Riv,SBd	91,215	21.5/21.7, 43.2/45.2,0.0/5.1	1721	1743

PROFESSIONAL GEOLOGIST 1-18-12

4-16-12
PLANS APPROVAL DATE

PROFESSIONAL GEOLOGIST Hector Valencia No. 7776 Exp. 2-28-14 STATE OF CALIFORNIA

The State of California or its officers or agents shall not be responsible for the accuracy or completeness of electronic copies of this plan sheet.

This LOTB sheet was prepared in accordance with the Caltrans Soil & Rock Logging, Classification, & Presentation Manual (2010 Edition).

FOR PLAN VIEW, SEE
"LOG OF TEST BORINGS 1 OF 7"

83.0' Lt Sta 311+92.0
"M1ALN1" Line

RW-11-005

918.6'

4.3 ASPHALT CONCRETE (3").
SILTY SAND with GRAVEL (SM); gray; dry; fine and medium SAND; some fines; little fine GRAVEL; (FILL).
CLAYEY SAND (SC); medium dense; brown; moist; fine and medium SAND; some fines; few fine GRAVEL.

16 1.4 | 57 1.4 | 59 1.4 | 57 1.4 | 79 1.4 | 64 1.4 | 60 1.4 | 48 1.4 | 91 1.4 | 49 1.4 | 50/4 1.4 | 52/6 1.4 | 68 1.4 | 62/6 1.4 | 50/3 1.4 | 50/6 1.4 | 53/6 1.4 | 50/3 1.4 | 50/2 1.4 | 50/3 1.4 | 50/4 1.4 | 50/1 1.4 | 50/3 1.4 | 50/4 1.4 | 50/3 1.4

CLAYEY SAND with GRAVEL (SC) thickly bedded with scattered moderately thick interbeds of elastic SILT with SAND (MH). SAND (SC); very dense; brown; moist; from fine to coarse SAND; some fines; little fine and coarse GRAVEL. SILT (MH); hard; brown; moist; little fine SAND; PP=4.0 tsf.

SILT with SAND (ML); very dense; brown; moist; little fine SAND.

SILTY SAND (SM); very dense; brown moist; mostly fine and medium SAND; some fines; few fine and coarse GRAVEL; few coarse SAND.

SILTY SAND (SM); very dense; light yellowish brown; moist; from fine to coarse SAND; little fines; few fine and coarse GRAVEL.

Poorly-graded SAND (SP); very dense; light yellowish brown; moist; mostly fine SAND; few fine and coarse GRAVEL; trace fines; trace medium and coarse SAND.

Fat CLAY (CH); hard; light olive brown; moist; few fine SAND; PP=2.5 to 3.5 tsf.

Poorly-graded SAND (SP) thickly bedded with scattered thin interbeds of Lean CLAY (CL). SAND (SP); very dense; light olive brown; moist; fine SAND; trace fines; few fine gravel. CLAY (CL); from very stiff to hard; light olive brown; moist; PP=3.0 to 4.0 tsf.

Well-graded SAND with GRAVEL (SW); very dense; light olive brown; moist; little fine and coarse GRAVEL; trace fines.

SILTY SAND (SM); very dense; light olive brown; moist; fine SAND; some fines.

SILTY SAND with GRAVEL (SM); very dense; light olive brown; moist; from fine to coarse SAND; little fines; little fine and coarse GRAVEL.

-mostly fine and medium SAND.

-mostly from fine to coarse SAND.

-scattered (~10%) moderately thick zones with some fine and coarse GRAVEL.

GWS Elev 807.2'
10-13-11

7-14-11
Terminated at Elev 757.8'
ERi = 74%

920 | 910 | 900 | 890 | 880 | 870 | 860 | 850 | 840 | 830 | 820 | 810 | 800 | 790 | 780 | 770 | 760

311+50 | 312+50 | 313+50

PROFILE
Horiz: 1" = 10'
Vert: 1" = 10'

ENGINEERING SERVICES	MATERIALS AND GEOTECHNICAL SERVICES	STATE OF CALIFORNIA DEPARTMENT OF TRANSPORTATION	DIVISION OF ENGINEERING SERVICES STRUCTURE DESIGN DESIGN BRANCH 10	BRIDGE NO. 54-1306 R.R. MILE POST 5.88 LINE SEG. 7602	HIGHGROVE UP (SHOOFLY) LOG OF TEST BORINGS 2 OF 7
FUNCTIONAL SUPERVISOR NAME: M. DeSalvatore	DRAWN BY: W. Tang 09/11 CHECKED BY: S. Logeswaran	FIELD INVESTIGATION BY: H. Valencia			

OGS CIVIL LOG OF TEST BORINGS SHEET

ORIGINAL SCALE IN INCHES FOR REDUCED PLANS 0 1 2 3

UNIT: 3643
PROJECT NUMBER & PHASE: 08000005061 CONTRACT NO.: 08-0M9401

DISREGARD PRINTS BEARING EARLIER REVISION DATES → 01-09-12 01-13-12

SHEET 44 OF 49

FILE => 541306rzltb44.dgn

USERNAME => s124496 DATE PLOTTED => 18-APR-2012 TIME PLOTTED => 08:09

DIST	COUNTY	ROUTE	POST MILES TOTAL PROJECT	SHEET No	TOTAL SHEETS
08	Riv,SBd	91,215	21.5/21.7, 43.2/45.2,0.0/5.1	1722	1743

PROFESSIONAL GEOLOGIST 1-18-12

4-16-12
PLANS APPROVAL DATE

PROFESSIONAL GEOLOGIST Hector Valencia No. 7776 Exp. 2-28-14 STATE OF CALIFORNIA

The State of California or its officers or agents shall not be responsible for the accuracy or completeness of electronic copies of this plan sheet.

This LOTB sheet was prepared in accordance with the Caltrans Soil & Rock Logging, Classification, & Presentation Manual (2010 Edition).

FOR PLAN VIEW, SEE
"LOG OF TEST BORINGS 1 OF 7"

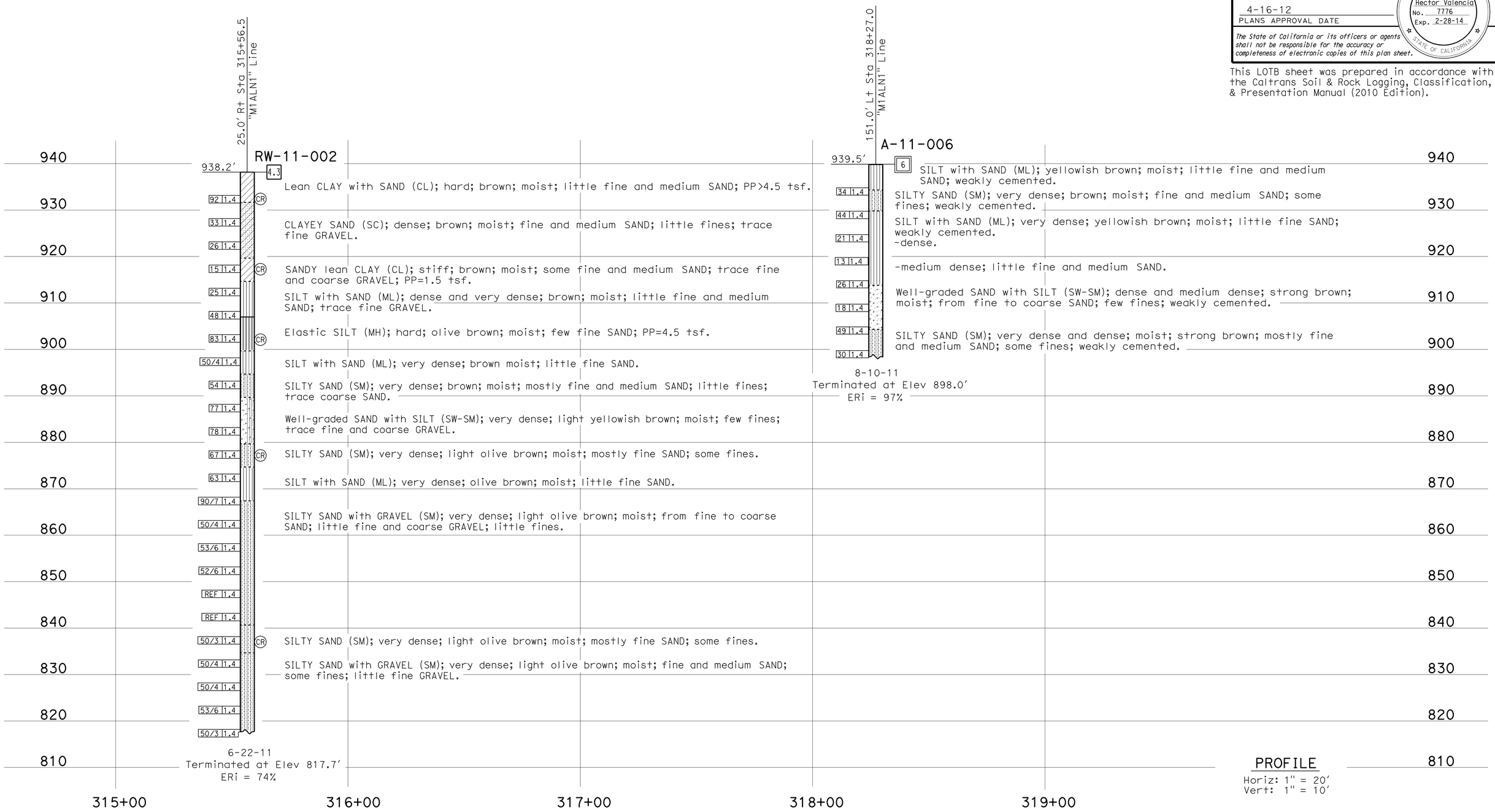

ENGINEERING SERVICES	MATERIALS AND GEOTECHNICAL SERVICES	STATE OF CALIFORNIA DEPARTMENT OF TRANSPORTATION	DIVISION OF ENGINEERING SERVICES STRUCTURE DESIGN DESIGN BRANCH 10	BRIDGE NO. 54-1306 R.R. MILE POST 5.88 LINE SEG. 7602	HIGHGROVE UP (SHOOFLY) LOG OF TEST BORINGS 3 OF 7
FUNCTIONAL SUPERVISOR NAME: M. DeSalvatore	DRAWN BY: W. Tang 09/11 CHECKED BY: S. Logeswaran	FIELD INVESTIGATION BY: H. Valencia / M. Wilson			

OGS CIVIL LOG OF TEST BORINGS SHEET

ORIGINAL SCALE IN INCHES FOR REDUCED PLANS 0 1 2 3

UNIT: 3643
PROJECT NUMBER & PHASE: 08000005061 CONTRACT NO.: 08-0M9401

DISREGARD PRINTS BEARING EARLIER REVISION DATES → REVISION DATES 01-10-12 01-13-12

SHEET 45 OF 49

FILE => 541306rzltb45.dgn

USERNAME => s124496 DATE PLOTTED => 18-APR-2012 TIME PLOTTED => 08:09

DIST	COUNTY	ROUTE	POST MILES TOTAL PROJECT	SHEET No	TOTAL SHEETS
08	Riv,SBd	91,215	21.5/21.7, 43.2/45.2,0.0/5.1	1723	1743

PROFESSIONAL GEOLOGIST 1-18-12

4-16-12
PLANS APPROVAL DATE

PROFESSIONAL GEOLOGIST Hector Valencia No. 7776 Exp. 2-28-14 STATE OF CALIFORNIA

The State of California or its officers or agents shall not be responsible for the accuracy or completeness of electronic copies of this plan sheet.

This LOTB sheet was prepared in accordance with the Caltrans Soil & Rock Logging, Classification, & Presentation Manual (2010 Edition).

FOR PLAN VIEW, SEE
"LOG OF TEST BORINGS 1 OF 7"

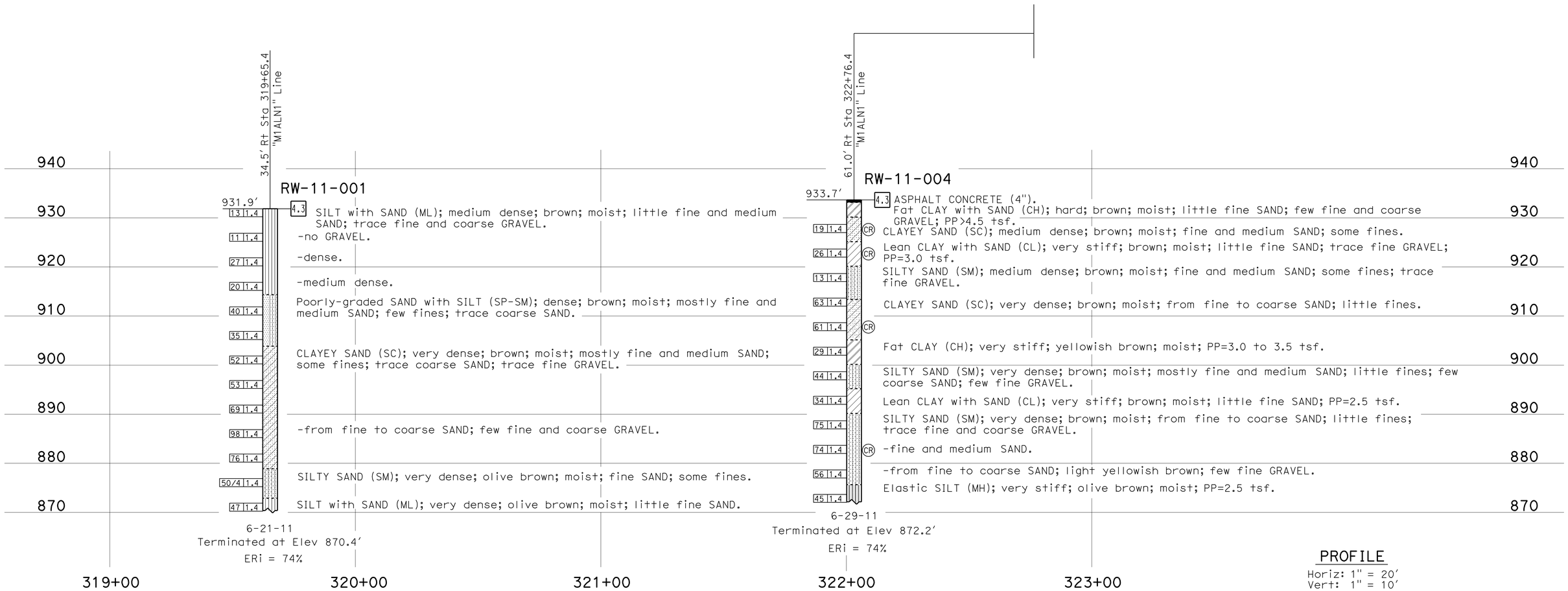

PROFILE
Horiz: 1" = 20'
Vert: 1" = 10'

ENGINEERING SERVICES	MATERIALS AND GEOTECHNICAL SERVICES	STATE OF CALIFORNIA DEPARTMENT OF TRANSPORTATION	DIVISION OF ENGINEERING SERVICES STRUCTURE DESIGN DESIGN BRANCH 10	BRIDGE NO. 54-1306	HIGHGROVE UP (SHOOFLY)
FUNCTIONAL SUPERVISOR	DRAWN BY: W. Tang 09/11	FIELD INVESTIGATION BY:		R.R. MILE POST 5.88 LINE SEG. 7602	LOG OF TEST BORINGS 4 OF 7
NAME: M. DeSalvatore	CHECKED BY: S. Logeswaran	H. Valencia			

OGS CIVIL LOG OF TEST BORINGS SHEET

ORIGINAL SCALE IN INCHES FOR REDUCED PLANS 0 1 2 3

UNIT: 3643
PROJECT NUMBER & PHASE: 08000005061 CONTRACT NO.: 08-0M9401

DISREGARD PRINTS BEARING EARLIER REVISION DATES

REVISION DATES 01-10-12 01-13-12

SHEET 46 OF 49

FILE => 541306rzlltb46.dgn

USERNAME => s124496 DATE PLOTTED => 18-APR-2012 TIME PLOTTED => 08:03

DIST	COUNTY	ROUTE	POST MILES TOTAL PROJECT	SHEET No	TOTAL SHEETS
08	Riv,SBd	91,215	21.5/21.7, 43.2/45.2,0.0/5.1	1724	1743

1-18-12
PROFESSIONAL GEOLOGIST

4-16-12
PLANS APPROVAL DATE

PROFESSIONAL GEOLOGIST Hector Valencia No. 7776 Exp. 2-28-14 STATE OF CALIFORNIA

The State of California or its officers or agents shall not be responsible for the accuracy or completeness of electronic copies of this plan sheet.

REFERENCE: CALTRANS SOIL & ROCK LOGGING, CLASSIFICATION, AND PRESENTATION MANUAL (2010)

CEMENTATION

Description	Criteria
Weak	Crumbles or breaks with handling or little finger pressure.
Moderate	Crumbles or breaks with considerable finger pressure.
Strong	Will not crumble or break with finger pressure.

BOREHOLE IDENTIFICATION

Symbol	Hole Type	Description
Size	A	Auger Boring (hollow or solid stem bucket)
Size	R RW RC P	Rotary drilled boring (conventional) Rotary drilled with self-casing wire-line Rotary core with continuously-sampled, self-casing wire-line Rotary percussion boring (air)
Size	R RC	Rotary drilled diamond core Rotary drilled rock core
Size	HD HA	Hand driven (1-inch soil tube) Hand Auger
●	D	Dynamic Cone Penetration Boring
▲	CPT	Cone Penetration Test (ASTM D 5778)
⬚	O	Other (note on LOTB)

Note: Size in inches.

CONSISTENCY OF COHESIVE SOILS

Description	Shear Strength (tsf)	Pocket Penetrometer Measurement, PP, (tsf)	Torvane Measurement, TV, (tsf)	Vane Shear Measurement, VS, (tsf)
Very Soft	Less than 0.12	Less than 0.25	Less than 0.12	Less than 0.12
Soft	0.12 - 0.25	0.25 - 0.5	0.12 - 0.25	0.12 - 0.25
Medium Stiff	0.25 - 0.5	0.5 - 1	0.25 - 0.5	0.25 - 0.5
Stiff	0.5 - 1	1 - 2	0.5 - 1	0.5 - 1
Very Stiff	1 - 2	2 - 4	1 - 2	1 - 2
Hard	Greater than 2	Greater than 4	Greater than 2	Greater than 2

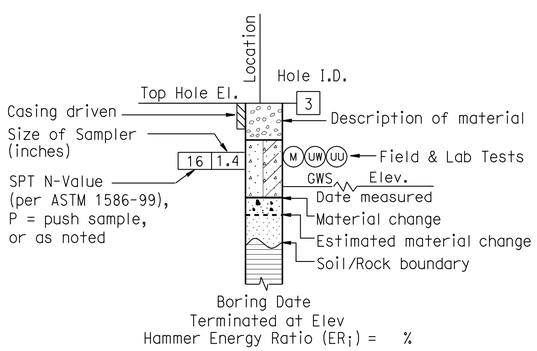

ROTARY BORING

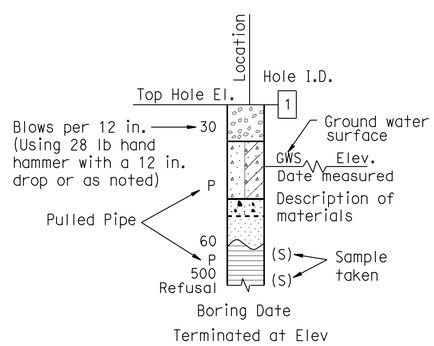

HAND BORING

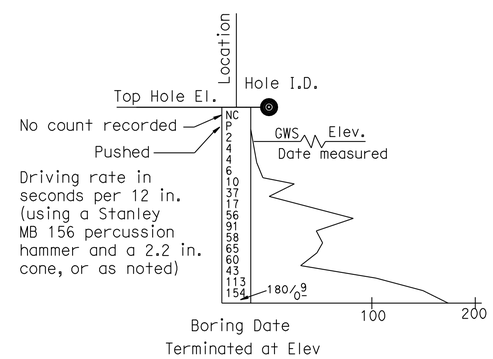

DYNAMIC CONE PENETRATION BORING

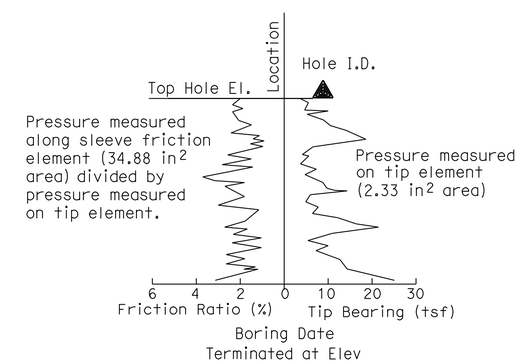

CONE PENETRATION TEST (CPT) BORING

ENGINEERING SERVICES	MATERIALS AND GEOTECHNICAL SERVICES	STATE OF CALIFORNIA DEPARTMENT OF TRANSPORTATION	DIVISION OF ENGINEERING SERVICES STRUCTURE DESIGN DESIGN BRANCH 10	BRIDGE NO. 54-1306 / R.R. MILE POST 5.88 LINE SEG. 7602	HIGHGROVE UP (SHOOFLY) LOG OF TEST BORINGS 5 OF 7
	PREPARED BY: W. Tang 09/11				

GS LOTB SOIL LEGEND

ORIGINAL SCALE IN INCHES FOR REDUCED PLANS 0 1 2 3

UNIT: 3643
PROJECT NUMBER & PHASE: 08000005061 CONTRACT NO.: 08-0M9401

DISREGARD PRINTS BEARING EARLIER REVISION DATES

REVISION DATES

SHEET 47 OF 49

FILE => 541306rzltb47.dgn

USERNAME => s124496 DATE PLOTTED => 18-APR-2012 TIME PLOTTED => 08:10

REFERENCE: CALTRANS SOIL & ROCK LOGGING, CLASSIFICATION, AND PRESENTATION MANUAL (2010)

DIST	COUNTY	ROUTE	POST MILES TOTAL PROJECT	SHEET No	TOTAL SHEETS
08	Riv,SBd	91,215	21.5/21.7, 43.2/45.2,0.0/5.1	1725	1743

PROFESSIONAL GEOLOGIST 1-18-12

4-16-12
PLANS APPROVAL DATE

PROFESSIONAL GEOLOGIST Hector Valencia No. 7776 Exp. 2-28-14 STATE OF CALIFORNIA

The State of California or its officers or agents shall not be responsible for the accuracy or completeness of electronic copies of this plan sheet.

GROUP SYMBOLS AND NAMES

Graphic/Symbol	Group Names	Graphic/Symbol	Group Names
GW	Well-graded GRAVEL Well-graded GRAVEL with SAND	CL	Lean CLAY Lean CLAY with SAND Lean CLAY with GRAVEL SANDY lean CLAY SANDY lean CLAY with GRAVEL GRAVELLY lean CLAY GRAVELLY lean CLAY with SAND
GP	Poorly-graded GRAVEL Poorly-graded GRAVEL with SAND		
GW-GM	Well-graded GRAVEL with SILT Well-graded GRAVEL with SILT and SAND	CL-ML	SILTY CLAY SILTY CLAY with SAND SILTY CLAY with GRAVEL SANDY SILTY CLAY SANDY SILTY CLAY with GRAVEL GRAVELLY SILTY CLAY GRAVELLY SILTY CLAY with SAND
GW-GC	Well-graded GRAVEL with CLAY (or SILTY CLAY) Well-graded GRAVEL with CLAY and SAND (or SILTY CLAY and SAND)		
GP-GM	Poorly-graded GRAVEL with SILT Poorly-graded GRAVEL with SILT and SAND	ML	SILT SILT with SAND SILT with GRAVEL SANDY SILT SANDY SILT with GRAVEL GRAVELLY SILT GRAVELLY SILT with SAND
GP-GC	Poorly-graded GRAVEL with CLAY (or SILTY CLAY) Poorly-graded GRAVEL with CLAY and SAND (or SILTY CLAY and SAND)		
GM	SILTY GRAVEL SILTY GRAVEL with SAND	OL	ORGANIC lean CLAY ORGANIC lean CLAY with SAND ORGANIC lean CLAY with GRAVEL SANDY ORGANIC lean CLAY SANDY ORGANIC lean CLAY with GRAVEL GRAVELLY ORGANIC lean CLAY GRAVELLY ORGANIC lean CLAY with SAND
GC	CLAYEY GRAVEL CLAYEY GRAVEL with SAND		
GC-GM	SILTY, CLAYEY GRAVEL SILTY, CLAYEY GRAVEL with SAND	OL	ORGANIC SILT ORGANIC SILT with SAND ORGANIC SILT with GRAVEL SANDY ORGANIC SILT SANDY ORGANIC SILT with GRAVEL GRAVELLY ORGANIC SILT GRAVELLY ORGANIC SILT with SAND
SW	Well-graded SAND Well-graded SAND with GRAVEL		
SP	Poorly-graded SAND Poorly-graded SAND with GRAVEL	CH	Fat CLAY Fat CLAY with SAND Fat CLAY with GRAVEL SANDY fat CLAY SANDY fat CLAY with GRAVEL GRAVELLY fat CLAY GRAVELLY fat CLAY with SAND
SW-SM	Well-graded SAND with SILT Well-graded SAND with SILT and GRAVEL		
SW-SC	Well-graded SAND with CLAY (or SILTY CLAY) Well-graded SAND with CLAY and GRAVEL (or SILTY CLAY and GRAVEL)	MH	Elastic SILT Elastic SILT with SAND Elastic SILT with GRAVEL SANDY elastic SILT SANDY elastic SILT with GRAVEL GRAVELLY elastic SILT GRAVELLY elastic SILT with SAND
SP-SM	Poorly-graded SAND with SILT Poorly-graded SAND with SILT and GRAVEL		
SP-SC	Poorly-graded SAND with CLAY (or SILTY CLAY) Poorly-graded SAND with CLAY and GRAVEL (or SILTY CLAY and GRAVEL)	OH	ORGANIC fat CLAY ORGANIC fat CLAY with SAND ORGANIC fat CLAY with GRAVEL SANDY ORGANIC fat CLAY SANDY ORGANIC fat CLAY with GRAVEL GRAVELLY ORGANIC fat CLAY GRAVELLY ORGANIC fat CLAY with SAND
SM	SILTY SAND SILTY SAND with GRAVEL		
SC	CLAYEY SAND CLAYEY SAND with GRAVEL	OH	ORGANIC elastic SILT ORGANIC elastic SILT with SAND ORGANIC elastic SILT with GRAVEL SANDY ORGANIC elastic SILT SANDY ORGANIC elastic SILT with GRAVEL GRAVELLY ORGANIC elastic SILT GRAVELLY ORGANIC elastic SILT with SAND
SC-SM	SILTY, CLAYEY SAND SILTY, CLAYEY SAND with GRAVEL		
PT	PEAT	OL/OH	ORGANIC SOIL ORGANIC SOIL with SAND ORGANIC SOIL with GRAVEL SANDY ORGANIC SOIL SANDY ORGANIC SOIL with GRAVEL GRAVELLY ORGANIC SOIL GRAVELLY ORGANIC SOIL with SAND
	COBBLES COBBLES and BOULDERS BOULDERS		

FIELD AND LABORATORY TESTING

- (C) Consolidation (ASTM D 2435)
- (CL) Collapse Potential (ASTM D 5333)
- (CP) Compaction Curve (CTM 216)
- (CR) Corrosivity Testing (CTM 643, CTM 422, CTM 417)
- (CU) Consolidated Undrained Triaxial (ASTM D 4767)
- (DS) Direct Shear (ASTM D 3080)
- (EI) Expansion Index (ASTM D 4829)
- (M) Moisture Content (ASTM D 2216)
- (OC) Organic Content-% (ASTM D 2974)
- (P) Permeability (CTM 220)
- (PA) Particle Size Analysis (ASTM D 422)
- (PI) Plasticity Index (AASHTO T 90) Liquid Limit (AASHTO T 89)
- (PL) Point Load Index (ASTM D 5731)
- (PM) Pressure Meter
- (R) R-Value (CTM 301)
- (SE) Sand Equivalent (CTM 217)
- (SG) Specific Gravity (AASHTO T 100)
- (SL) Shrinkage Limit (ASTM D 427)
- (SW) Swell Potential (ASTM D 4546)
- (UC) Unconfined Compression-Soil (ASTM D 2166) Unconfined Compression-Rock (ASTM D 2938)
- (UU) Unconsolidated Undrained Triaxial (ASTM D 2850)
- (UW) Unit Weight (ASTM D 4767)

APPARENT DENSITY OF COHESIONLESS SOILS

Description	SPT N_{60} (Blows / 12 in.)
Very Loose	0 - 5
Loose	5 - 10
Medium Dense	10 - 30
Dense	30 - 50
Very Dense	Greater than 50

MOISTURE

Description	Criteria
Dry	No discernable moisture
Moist	Moisture present, but no free water
Wet	Visible free water

PERCENT OR PROPORTION OF SOILS

Description	Criteria
Trace	Particles are present but estimated to be less than 5%
Few	5% - 10%
Little	15% - 25%
Some	30% - 45%
Mostly	50% - 100%

PARTICLE SIZE

Description		Size (in.)
Boulder		Greater than 12
Cobble		3 - 12
Gravel	Coarse	3/4 - 3
	Fine	1/5 - 3/4
Sand	Coarse	1/16 - 1/5
	Medium	1/64 - 1/16
	Fine	1/300 - 1/64
Silt and Clay		Less than 1/300

ENGINEERING SERVICES

MATERIALS AND GEOTECHNICAL SERVICES

PREPARED BY: W. Tang 09/11

STATE OF CALIFORNIA DEPARTMENT OF TRANSPORTATION

DIVISION OF ENGINEERING SERVICES STRUCTURE DESIGN DESIGN BRANCH 10

BRIDGE NO. 54-1306

R.R. MILE POST 5.88 LINE SEG. 7602

HIGHGROVE UP (SHOOFLY)

LOG OF TEST BORINGS 6 OF 7

GS LOTB SOIL LEGEND

ORIGINAL SCALE IN INCHES FOR REDUCED PLANS 0 1 2 3

UNIT: 3643
PROJECT NUMBER & PHASE: 08000005061 CONTRACT NO.: 08-0M9401

DISREGARD PRINTS BEARING EARLIER REVISION DATES

REVISION DATES

SHEET 48 OF 49

FILE => 541306rzltb48.dgn

USERNAME => s124496 DATE PLOTTED => 18-APR-2012 TIME PLOTTED => 08:10

FED. ROAD DIV. NO.	STATE	PROJ. NO.	FISCAL YEAR	SHEET NO.	TOTAL SHEETS
7	CAL.	BR-0269(8)		114	115

DIST.	COUNTY	ROUTE	SECTION	SHEET NO.	TOTAL SHEETS
VIII	SBd	215	F	10	10

Bridge Engineer — Civil Engineer — Chief Engineer

DATE APPROVED: April 2, 1958

AS BUILT PLANS
Contract No. 59-8V68
Date Completed
Document No. 80000766

BRIDGE DEPARTMENT

Design Pile Loading 45 Tons
Type Pile Raymond step taper
Diameter Tip 8" Butt 15 1/2"
Total Number Piles 72
Lineal ft. Piles "As Built" 889.7
Lineal ft. Piles Called for on Plans 585
Hammer Vulcan NO. 1
Remarks:
Lineal ft. of piles increased to 1170 CCO #14

AS BUILT
CORRECTIONS BY H.C. Moore
CONTRACT NO. 59-8V68-F

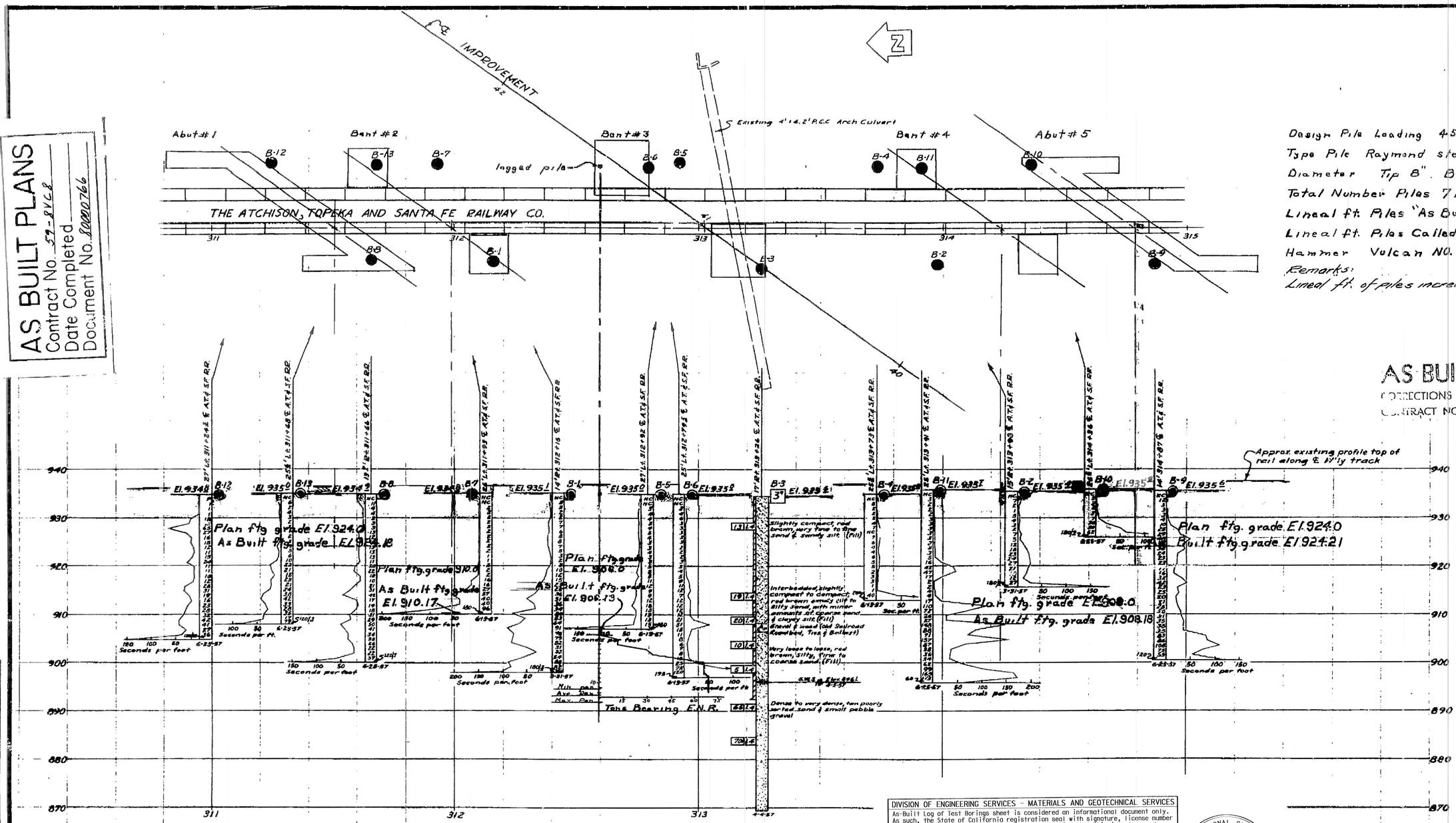

CLASSIFICATION OF MATERIAL BASED ON STANDARD GRADE SIZE LIMITS

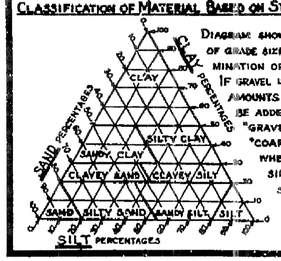

DIAGRAM SHOWING THE BASIS FOR ESTIMATES OF GRADE SIZE DISTRIBUTION USED IN DETERMINATION OF CLASS NAMES. IF GRAVEL IS PRESENT IN APPRECIABLE AMOUNTS THE TERM "GRAVELLY" MAY BE ADDED TO THE CLASS NAME, VIZ. "GRAVELLY SAND." THE TERMS "COARSE", "MEDIUM" AND "FINE" WHEN USED TO DESCRIBE SAND, SILT AND GRAVEL REFER TO STANDARD GRADE SIZE LIMITS.

LEGEND OF EARTH MATERIALS

- GRAVEL
- SAND
- SILT
- CLAY
- SANDY CLAY OR CLAYEY SAND
- SANDY SILT OR SILTY SAND
- SILTY CLAY OR CLAYEY SILT
- PEAT AND/OR ORGANIC MATTER
- FILL MATERIAL
- IGNEOUS ROCK
- SEDIMENTARY ROCK
- METAMORPHIC ROCK

LEGEND OF B

- PLAN OF ANY BORING
- PENETROMETER
- 2½" CONE PENETROMETER
- SAMPLER BORING (DRY)
- ROTARY BORING (WET)
- AUGER BORING (DRY)
- JET BORING
- CORE BORING
- TEST PIT

Top Hole El.
Blows per foot (Using ___ lb hand hammer with a 12" free fall)
Description of material
Pulled pipe
Sample taken
Date of boring
1" SOIL TUBE
Groundwater surface
Size of Samp
Blows per (Using a 140 hammer with drop, or as
Unconfined comp
Shear strength

DIVISION OF ENGINEERING SERVICES - MATERIALS AND GEOTECHNICAL SERVICES

As-Built Log of Test Borings sheet is considered an informational document only. As such, the State of California registration seal with signature, license number and registration certificate expiration date confirm that this is a true and accurate copy of the original document. It does not attest to the accuracy or validity of the information contained in the original document. This drawing is available and presented only for the convenience of any bidder, contractor or other interested party.

DIST.	COUNTY	ROUTE	POST MILE-TOTAL PROJECT	Sheet No.	Total Sheets
08	Riv,SBd	91,215	21.5/21.7,43.2/45.2,0.0/5.1	1726	1743

Hector Valencia — 1-18-12
PROFESSIONAL GEOLOGIST — DATE

PROFESSIONAL GEOLOGIST No. 7776 Exp. 2-28-14 STATE OF CALIFORNIA

HIGHGROVE UP (SHOOFLY)
LOG OF TEST BORINGS 7 OF 7

UNIT: 3643	CONTRACT No. 08-0M9401	BRIDGE No. 54-1306
PROJ. No. & PHASE: 08000005061	Sheet 49	of 49

VERT DATUM: NGVD29 CONVERSION: NAVD88 = NGVD29 + 2.5 ft

NOTE: A COPY OF THIS LOG OF TEST BORINGS IS AVAILABLE AT OFFICE OF STRUCTURE MAINTENANCE AND INVESTIGATIONS, SACRAMENTO, CALIFORNIA

TO ACCOMPANY PLANS DATED 4-16-12

NOTES

The contractor's attention is directed to Section 2, Article (c) of the Standard Specifications and to the Special Provisions accompanying this set of plans.

Classification of earth material as shown on this sheet is based upon field inspection and is not to be construed to imply mechanical analysis.

STATE OF CALIFORNIA
DEPARTMENT OF PUBLIC WORKS
DIVISION OF HIGHWAYS

HIGHGROVE UNDERPASS

LOG OF TEST BORINGS

SCALE HORIZ 1"=20' VERT 1" 10' | BRIDGE 54-518 | FILE E-54 | DRAWING C4858-10

DIST	COUNTY	ROUTE	POST MILES TOTAL PROJECT	SHEET No.	TOTAL SHEETS
08	Riv,SBd	91,215	21.5/21.7, 43.2/45.2,0.0/5.1	1727	1743

REGISTERED CIVIL ENGINEER — DATE 4-06-12

4-16-12
PLANS APPROVAL DATE

REGISTERED PROFESSIONAL ENGINEER — LARRY WU No. C57035 Exp. 6-30-13 CIVIL — STATE OF CALIFORNIA

The State of California or its officers or agents shall not be responsible for the accuracy or completeness of electronic copies of this plan sheet.

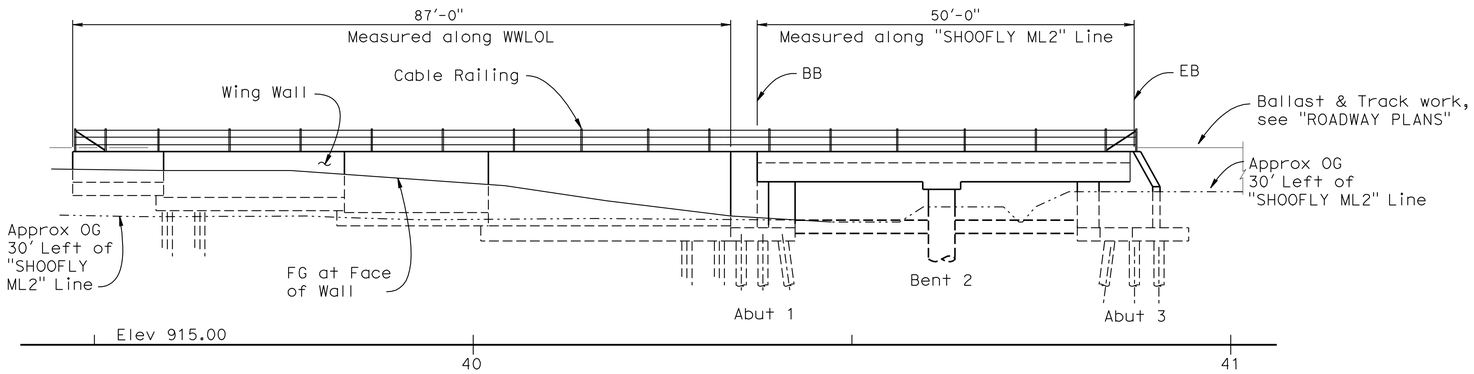

MIRRORED ELEVATION

1" = 10'

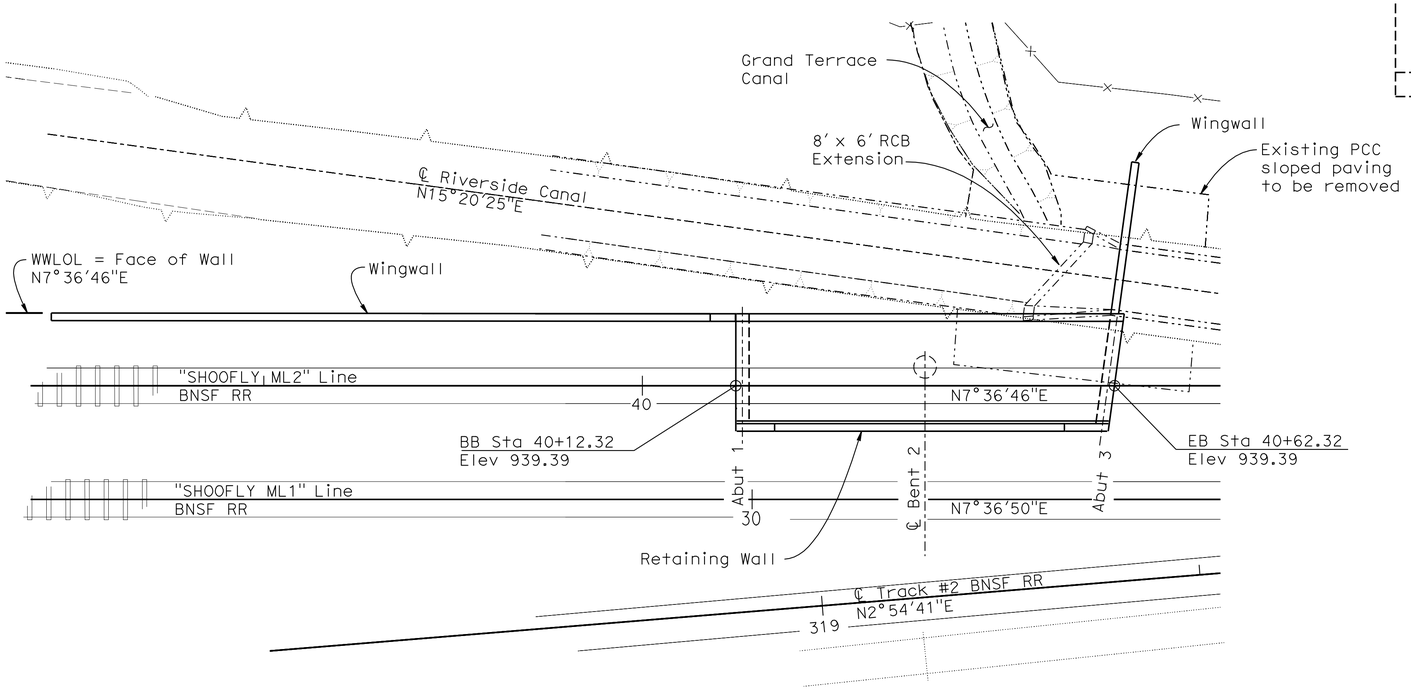

PLAN

1" = 10'

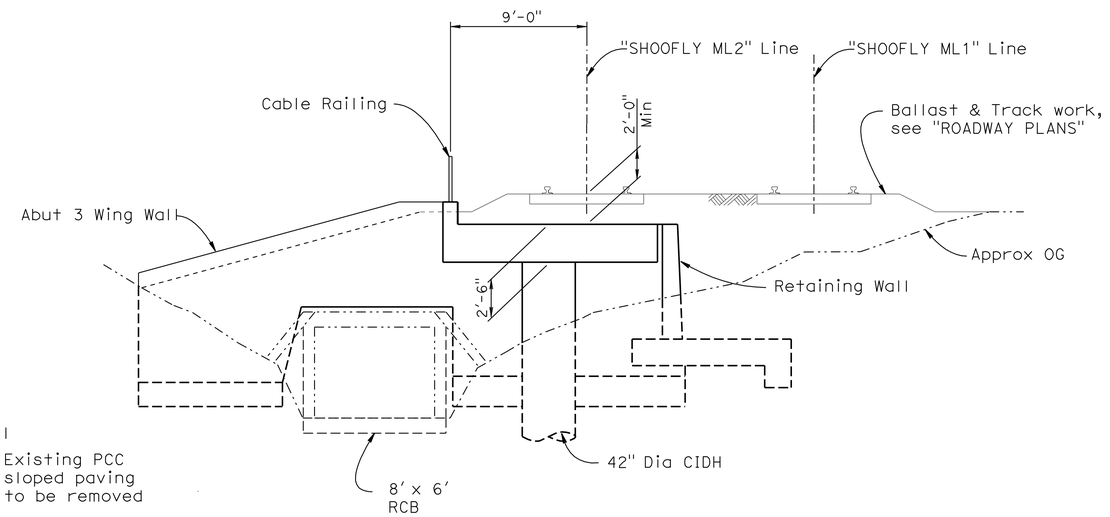

TYPICAL SECTION

1" = 5'

QUANTITIES

STRUCTURE EXCAVATION (BRIDGE)	400	CY
STRUCTURE EXCAVATION (RETAINING WALL)	307	CY
STRUCTURE BACKFILL (BRIDGE)	95	CY
STRUCTURE BACKFILL (RETAINING WALL)	275	CY
PERVIOUS BACKFILL MATERIAL	32	CY
FURNISH STEEL PILING (HP 10 X 42)	2,744	LF
DRIVE STEEL PILE (HP 10 X 42)	58	EA
42" CAST-IN-DRILLED-HOLE CONCRETE PILING	62	LF
STRUCTURAL CONCRETE, BRIDGE FOOTING	105	CY
STRUCTURAL CONCRETE, BRIDGE	93	CY
STRUCTURAL CONCRETE, RETAINING WALL	45	CY
BAR REINFORCING STEEL (BRIDGE)	27,483	LB
BAR REINFORCING STEEL (RETAINING WALL)	13,467	LB
MINOR CONCRETE (GUTTER)	87	LF
CABLE RAILING	54	LF

LEGEND:

-·-·-·-·- Indicates Existing Structures

——— Indicates New Construction

NOTE:
THE CONTRACTOR SHALL VERIFY ALL CONTROLLING FIELD DIMENSIONS BEFORE ORDERING OR FABRICATING ANY MATERIAL.

Daniel T. Adams
DESIGN ENGINEER

	BY	CHECKED
DESIGN	H. Vu	J. Ki Jung
DETAILS	R. Kirkland	J. Ki Jung
QUANTITIES	H. Vu	J. Ki Jung

LOAD FACTOR DESIGN — LIVE LOADING: AREMA Cooper E-90

	BY	CHECKED
LAYOUT	H. Vu	J. Ki Jung
SPECIFICATIONS	J. Corrado	PLANS AND SPECS COMPARED J. Corrado

ORIGINAL SCALE IN INCHES FOR REDUCED PLANS 0 1 2 3

STATE OF CALIFORNIA
DEPARTMENT OF TRANSPORTATION

DIVISION OF ENGINEERING SERVICES
STRUCTURE DESIGN
DESIGN BRANCH 10

BRIDGE NO. 54-1306S
POST MILE 0.62

HIGHGROVE UP (SHOOFLY) VIADUCT
GENERAL PLAN

UNIT: 3589
PROJECT NUMBER & PHASE: 08000005061
CONTRACT NO.: 08-0M9401

DISREGARD PRINTS BEARING EARLIER REVISION DATES

REVISION DATES: 9-22-11 3-28-12

SHEET 1 OF 17

USERNAME => s124496 DATE PLOTTED => 18-APR-2012 TIME PLOTTED => 08:16

STRUCTURES DESIGN GENERAL PLAN SHEET (ENGLISH) (REV.09-01-10)

FILE => 541306sagp01.dgn

DIST	COUNTY	ROUTE	POST MILES TOTAL PROJECT	SHEET No.	TOTAL SHEETS
08	Riv,SBd	91,215	21.5/21.7, 43.2/45.2,0.0/5.1	1728	1743

REGISTERED CIVIL ENGINEER 12-30-11 DATE

4-16-12
PLANS APPROVAL DATE

REGISTERED PROFESSIONAL ENGINEER LARRY WU No. C57035 Exp. 6-30-13 CIVIL STATE OF CALIFORNIA

The State of California or its officers or agents shall not be responsible for the accuracy or completeness of electronic copies of this plan sheet.

INDEX TO PLANS

Sheet No.	Title
1.	GENERAL PLAN
2.	INDEX TO PLANS
3.	FOUNDATION PLAN
4.	ABUTMENT LAYOUT
5.	ABUTMENT DETAILS
6.	ABUTMENT NO. 1 WINGWALL LAYOUT
7.	ABUTMENT NO. 1 WINGWALL DETAILS
8.	BENT DETAILS
9.	TYPICAL SECTION
10.	SLAB REINFORCEMENT
11.	LOG OF TEST BORINGS 1 OF 7
12.	LOG OF TEST BORINGS 2 OF 7
13.	LOG OF TEST BORINGS 3 OF 7
14.	LOG OF TEST BORINGS 4 OF 7
15.	LOG OF TEST BORINGS 5 OF 7
16.	LOG OF TEST BORINGS 6 OF 7
17.	LOG OF TEST BORINGS 7 OF 7

STANDARD PLANS DATED MAY 2006

A10A	ACRONYMS AND ABBREVIATIONS (SHEET 1 OF 2)
A10B	ACRONYMS AND ABBREVIATIONS (SHEET 2 OF 2)
A10C	SYMBOLS (SHEET 1 OF 2)
A10D	SYMBOLS (SHEET 2 OF 2)
A62B	LIMITS OF PAYMENT FOR EXCAVATION AND BACKFILL-BRIDGE SURCHARGE AND WALL
A62C	LIMITS OF PAYMENT FOR EXCAVATION AND BACKFILL-BRIDGE
BO-1	BRIDGE DETAILS
BO-3	BRIDGE DETAILS
B3-8	RETAINING WALL DETAILS NO. 1
B3-9	RETAINING WALL DETAILS NO. 2
B11-47	CABLE RAILING

STANDARD PLAN SHEET NO.

DETAIL NO.

GENERAL NOTES

DESIGN:
1. "MANUAL FOR RAILWAY ENGINEERING" AREMA. 2010 Edition
2. BNSF Railway - Union Pacific Railroad, "GUIDELINES FOR RAILROAD GRADE SEPARATION PROJECTS" - 2007
3. "BRIDGE DESIGN SPECIFICATION" LFD Version, April 2000 (1996 16th AASHTO with Interim's and Revisions by Caltrans)

SEISMIC DESIGN:
1. AREMA Chapter 9, Seismic Design for Railroad Structures
2. Caltrans Seismic Design Criteria (SDC) Version 1.6, November, 2010

LIVE LOADING:
1. Cooper E-80

SEISMIC LOADING:
1. AREMA Peak Rock Acceleration (PRA): Level 1 PRA = 0.33g

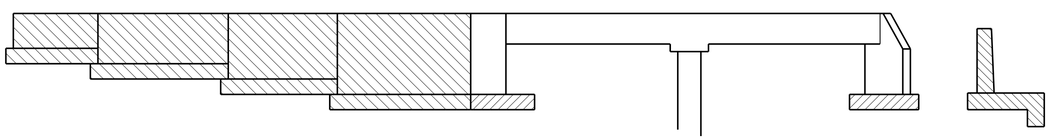

CONCRETE STRENGTH & TYPE LIMIT

Structural Concrete, Bridge (f'_c = 4,000 psi)

Structural Concrete, Bridge Footing

Structural Concrete, Retaining Wall

SPREADFOOT DATA TALE

Location	Allowable Gross Bearing Capacity (WSD)
Sidewall Retaining Wall	2.2 ksf

PILE DATA TABLE

Location	Pile Type	Design Loading (WSD) (kip/ksf)		Design Tip Elevation (ft)	Specified Tip Elevation (ft)	Nominal Driving Resistance Required (kips)
		Compression	Tension			
Abut 1	HP10 x 42 "H" Piles	80	0	881(a)	881	160
Abt 1 Wingwall (H=10′)	HP10 x 42 "H" Piles	70	0	883(a)	883	140
Abt 1 Wingwall (H=8′)	HP10 x 42 "H" Piles	65	0	886(a)	886	130
Abt 1 Wingwall (H=6′)	HP10 x 42 "H" Piles	70	0	885(a)	885	140
Abt 1 Wingwall (H=4′)	HP10 x 42 "H" Piles	50	0	890(a)	890	100
Bent 2	42" CIDH	700	0	869(a)	869	N/A
Abut 3	HP10 x 42 "H" Piles	80	0	881(a)	881	160
Abt 3 Wingwall	HP10 x 42 "H" Piles	40	0	895(a)	895	80

NOTES:

1. Design Tip Elevation is controlled by: (a) Compression

ARS CURVE

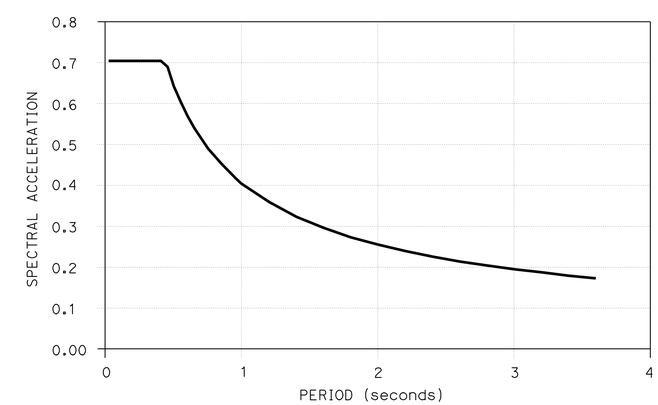

REINFORCED CONCRETE:
Load Factor Design
f_y = 60,000 psi
f'_c = 3,600 psi (Unless Otherwise Noted)
n = 9

	BY	CHECKED
DESIGN	H. Vu	J. Ki Jung
DETAILS	R. Kirkland	J. Ki Jung
QUANTITIES	H. Vu	J. Ki Jung

STATE OF CALIFORNIA
DEPARTMENT OF TRANSPORTATION

DIVISION OF ENGINEERING SERVICES
STRUCTURE DESIGN
DESIGN BRANCH 10

BRIDGE NO. 54-1306S
POST MILE 0.62

HIGHGROVE UP (SHOOFLY) VIADUCT
INDEX TO PLANS

STRUCTURES DESIGN DETAIL SHEET (ENGLISH) (REV. 09-01-10)

ORIGINAL SCALE IN INCHES FOR REDUCED PLANS 0 1 2 3

UNIT: 3589
PROJECT NUMBER & PHASE: 08000005061
CONTRACT NO.: 08-0m9401

DISREGARD PRINTS BEARING EARLIER REVISION DATES

REVISION DATES 12-30-11

SHEET 2 OF 17

FILE => 541306saltp02.dgn

USERNAME => s124496 DATE PLOTTED => 18-APR-2012 TIME PLOTTED => 08:16

DIST	COUNTY	ROUTE	POST MILES TOTAL PROJECT	SHEET No.	TOTAL SHEETS
08	Riv,SBd	91,215	21.5/21.7, 43.2/45.2,0.0/5.1	1729	1743

REGISTERED CIVIL ENGINEER — DATE 4-06-12

4-16-12
PLANS APPROVAL DATE

REGISTERED PROFESSIONAL ENGINEER — LARRY WU — No. C57035 — Exp. 6-30-13 — CIVIL — STATE OF CALIFORNIA

The State of California or its officers or agents shall not be responsible for the accuracy or completeness of electronic copies of this plan sheet.

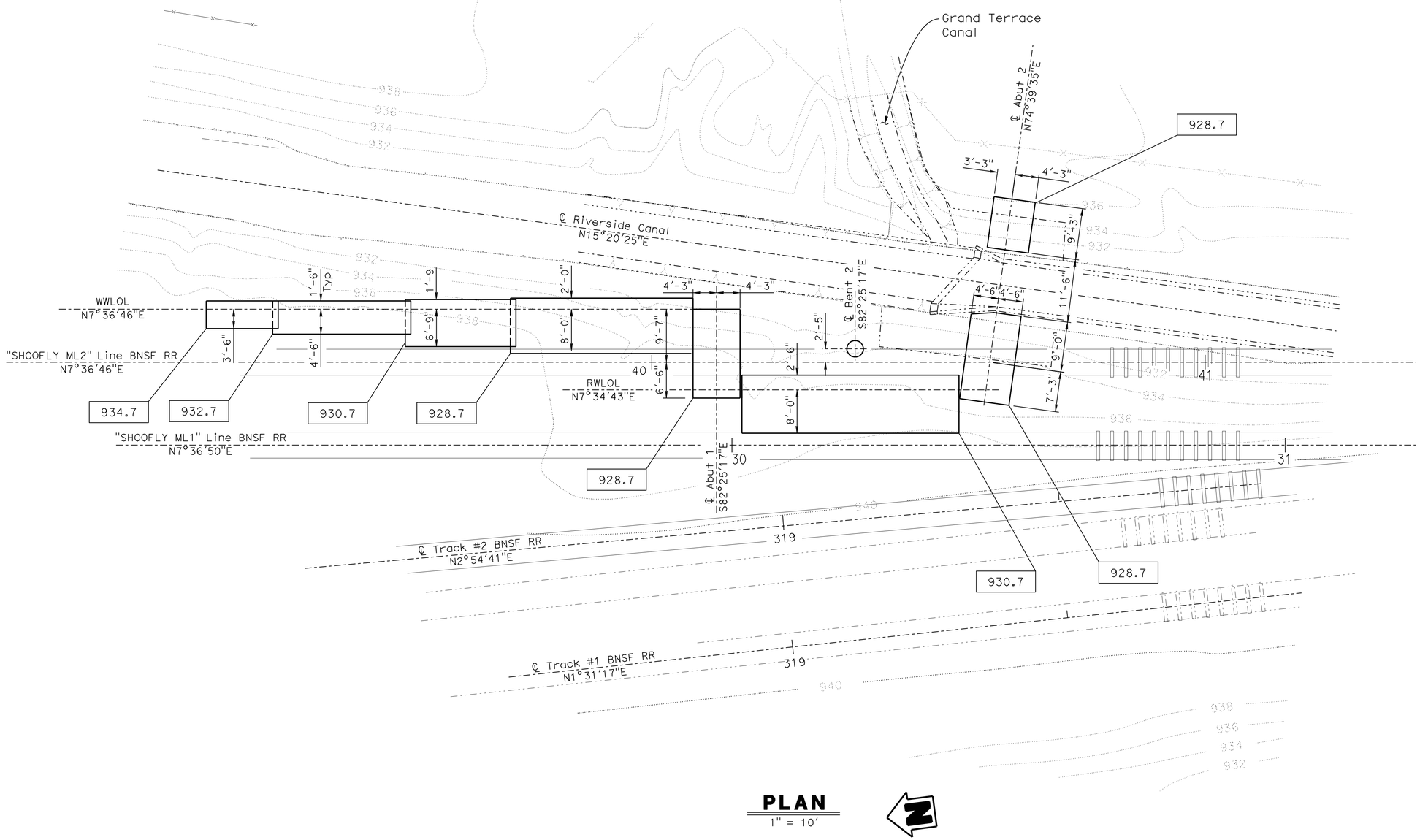

PLAN
1" = 10'

XXX.X Indicates Bottom of Footing Elevation (feet)

DESIGN	BY H. Vu	CHECKED J. Ki Jung	
DETAILS	BY R. Kirkland	CHECKED J. Ki Jung	
QUANTITIES	BY H. Vu	CHECKED J. Ki Jung	

STATE OF CALIFORNIA
DEPARTMENT OF TRANSPORTATION

DIVISION OF ENGINEERING SERVICES
STRUCTURE DESIGN
DESIGN BRANCH 10

BRIDGE NO. 54-1306S
POST MILE 0.62

HIGHGROVE UP (SHOOFLY) VIADUCT
FOUNDATION PLAN

STRUCTURES DESIGN DETAIL SHEET (ENGLISH) (REV. 09-01-10)

ORIGINAL SCALE IN INCHES FOR REDUCED PLANS 0 1 2 3

UNIT: 3589
PROJECT NUMBER & PHASE: 08000005061
CONTRACT NO.: 08-0m9401

DISREGARD PRINTS BEARING EARLIER REVISION DATES

REVISION DATES 12-30-11

SHEET 3 OF 17

FILE => 541306sefdpl03.dgn

USERNAME => s124496 DATE PLOTTED => 18-APR-2012 TIME PLOTTED => 08:16

DIST	COUNTY	ROUTE	POST MILES TOTAL PROJECT	SHEET No.	TOTAL SHEETS
08	Riv,SBd	91,215	21.5/21.7, 43.2/45.2,0.0/5.1	1730	1743

REGISTERED CIVIL ENGINEER 12-30-11 DATE

4-16-12
PLANS APPROVAL DATE

REGISTERED PROFESSIONAL ENGINEER LARRY WU No. C57035 Exp. 6-30-13 CIVIL STATE OF CALIFORNIA

The State of California or its officers or agents shall not be responsible for the accuracy or completeness of electronic copies of this plan sheet.

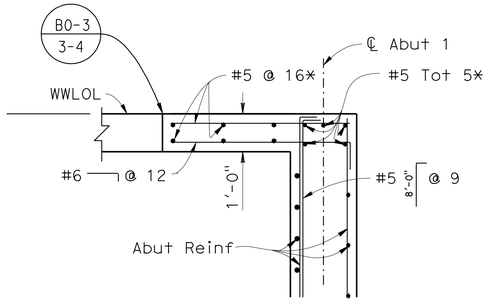

DETAIL A
1/2" = 1'-0"

NOTES:
* Extend vertical bar 1'-6" into footing

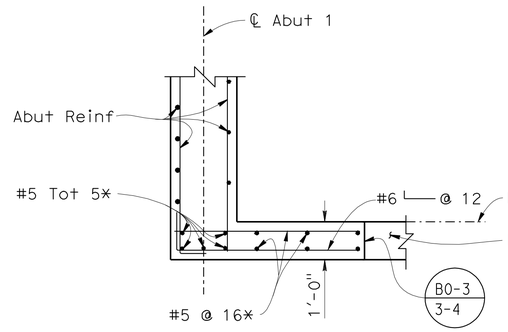

DETAIL B
1/2" = 1'-0"

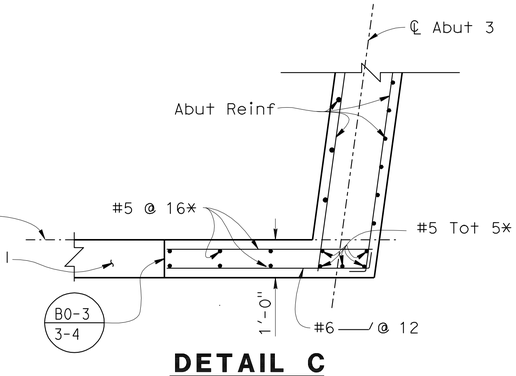

DETAIL C
1/2" = 1'-0"

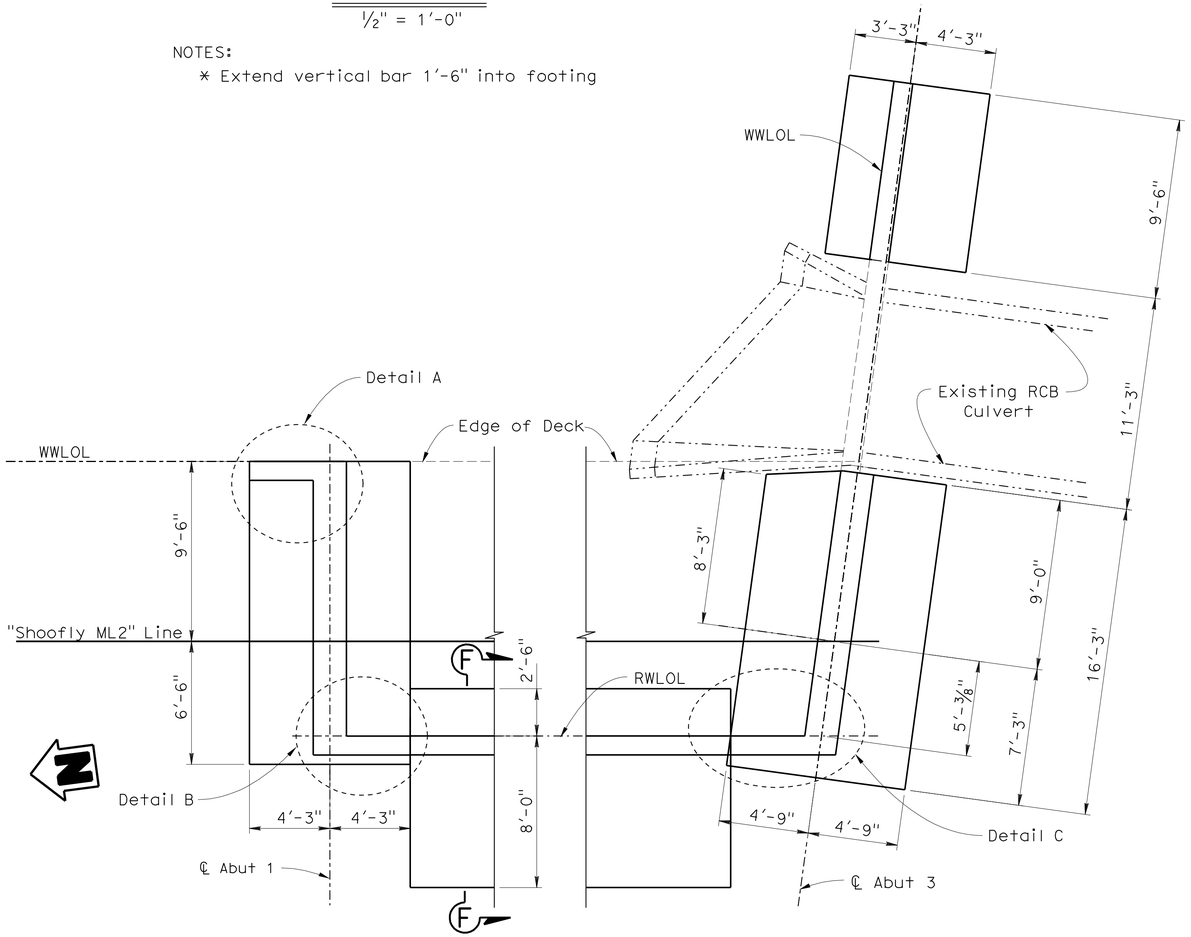

ABUTMENT PLAN
1/4" = 1'-0"

NOTE:
THE CONTRACTOR SHALL VERIFY ALL CONTROLLING FIELD DIMENSIONS BEFORE ORDERING OR FABRICATING ANY MATERIAL.

LEGEND:

Indicates Vertical Pile

Indicates Battered Pile at 1:3

NOTES:

1. For Section F-F, see "TYPICAL SECTION" sheet.

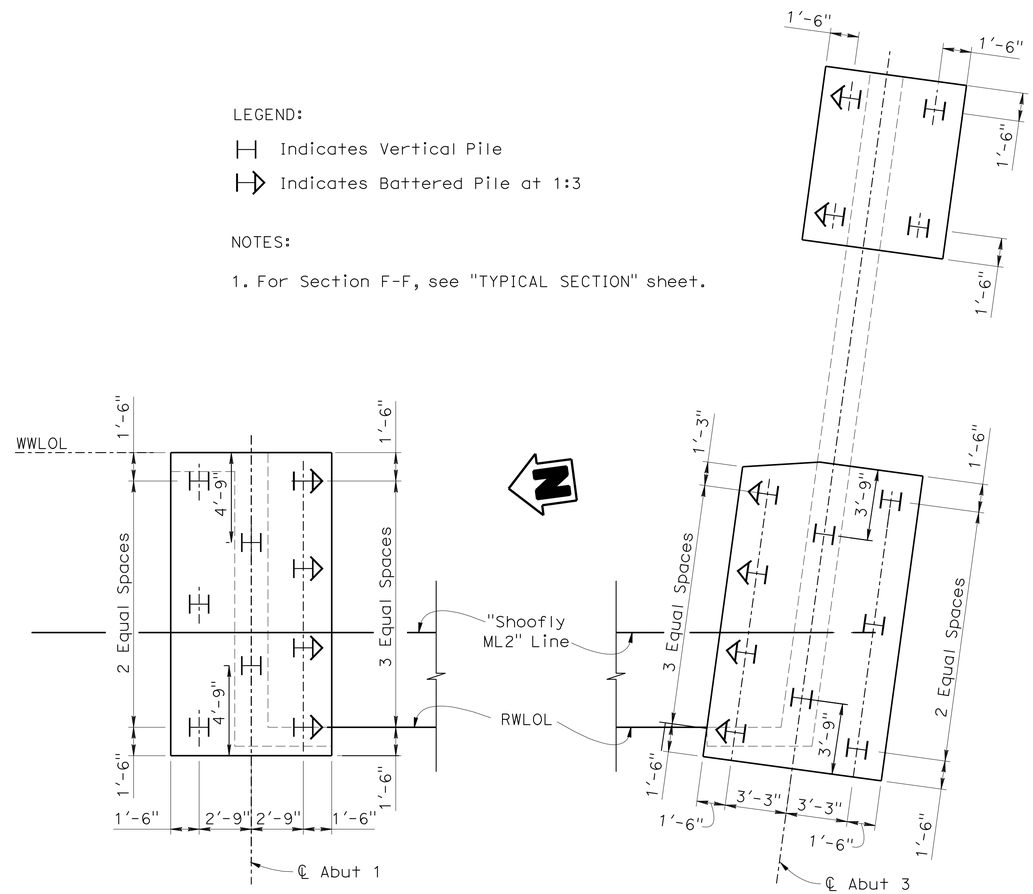

PILE LAYOUT
1/4" = 1'-0"

DESIGN	BY H. Vu	CHECKED J. Ki Jung	
DETAILS	BY R. Kirkland / Y. Tang	CHECKED J. Ki Jung	
QUANTITIES	BY H. Vu	CHECKED J. Ki Jung	

STATE OF CALIFORNIA
DEPARTMENT OF TRANSPORTATION

DIVISION OF ENGINEERING SERVICES
STRUCTURE DESIGN
DESIGN BRANCH 10

BRIDGE NO. 54-1306S
POST MILE 0.62

HIGHGROVE UP (SHOOFLY) VIADUCT
ABUTMENT LAYOUT

STRUCTURES DESIGN DETAIL SHEET (ENGLISH) (REV. 09-01-10)

ORIGINAL SCALE IN INCHES FOR REDUCED PLANS 0 1 2 3

UNIT: 3589
PROJECT NUMBER & PHASE: 08000005061
CONTRACT NO.: 08-0m9401

DISREGARD PRINTS BEARING EARLIER REVISION DATES

REVISION DATES 11-22-11

SHEET 4 OF 17

FILE => 541306sfa_l004.dgn

USERNAME => s124496 DATE PLOTTED => 18-APR-2012 TIME PLOTTED => 08:16

DIST	COUNTY	ROUTE	POST MILES TOTAL PROJECT	SHEET No.	TOTAL SHEETS
08	Riv,SBd	91,215	21.5/21.7, 43.2/45.2,0.0/5.1	1731	1743

REGISTERED CIVIL ENGINEER — DATE 4-06-12

4-16-12
PLANS APPROVAL DATE

REGISTERED PROFESSIONAL ENGINEER — LARRY WU — No. C57035 — Exp. 6-30-13 — CIVIL — STATE OF CALIFORNIA

The State of California or its officers or agents shall not be responsible for the accuracy or completeness of electronic copies of this plan sheet.

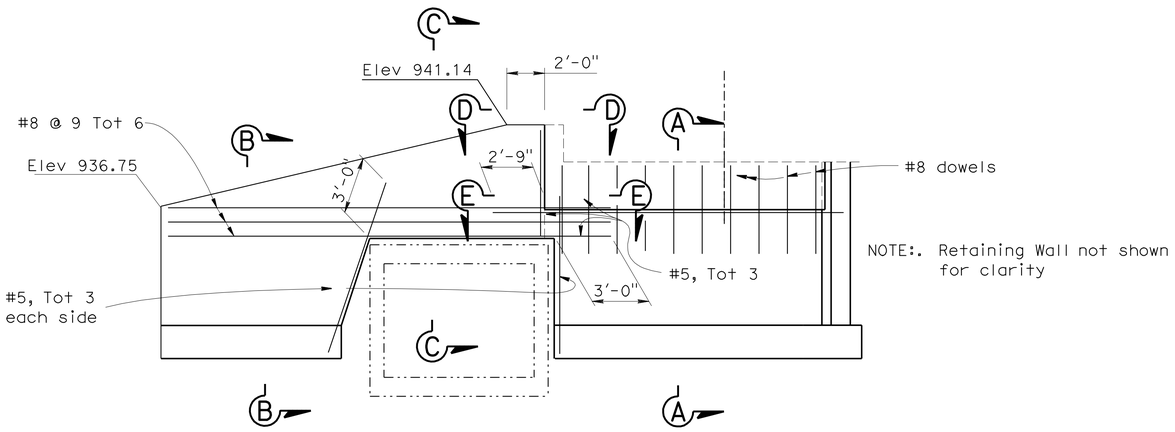

NOTE:. Retaining Wall not shown for clarity

ABUTMENT 3 ELEVATION

1/4" = 1'-0"

NOTE:. Abutment 3 shown, Abutment 1 similar

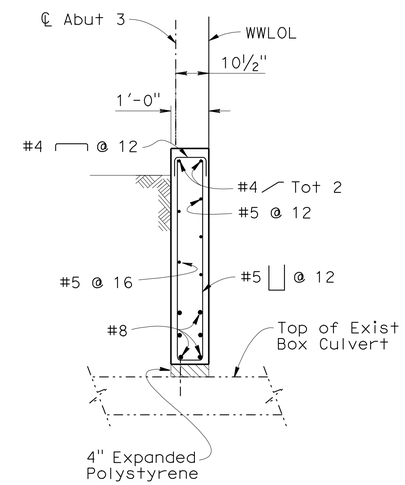

SECTION C-C

1/2" = 1'-0"

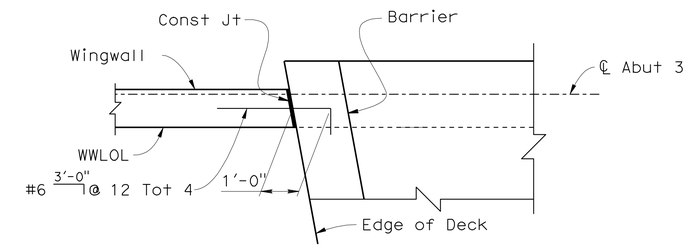

SECTION D-D

1/2" = 1'-0"

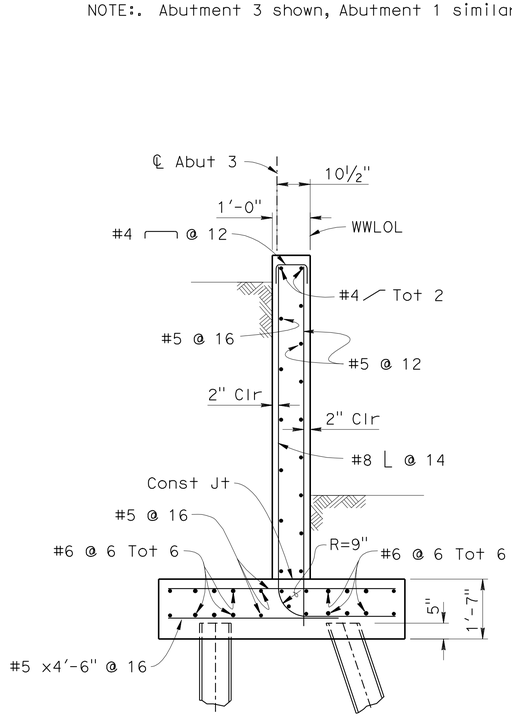

SECTION B-B

1/2" = 1'-0"

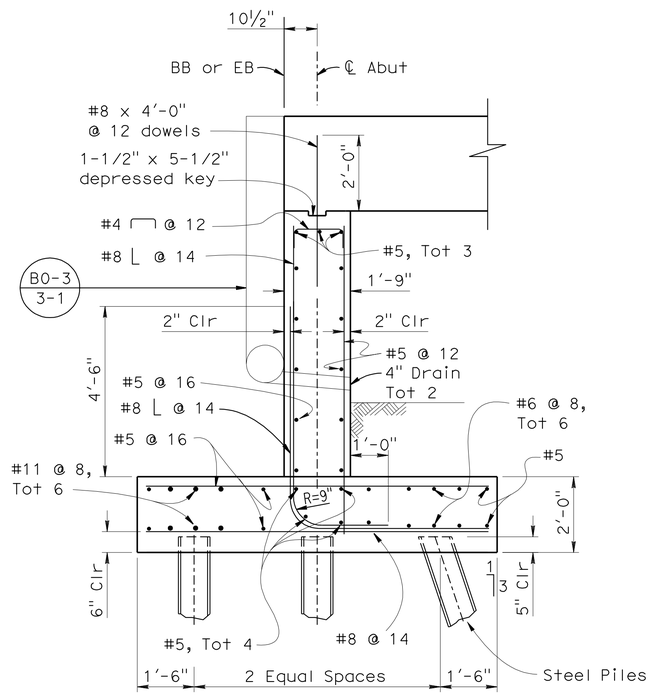

SECTION A-A

1/2" = 1'-0"

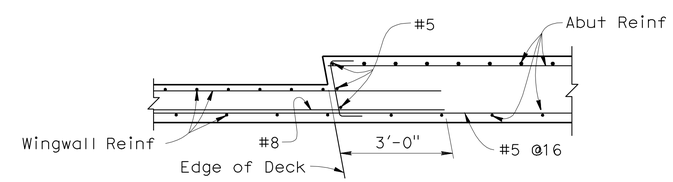

SECTION E-E

1/2" = 1'-0"

NOTE:
THE CONTRACTOR SHALL VERIFY ALL CONTROLLING FIELD DIMENSIONS BEFORE ORDERING OR FABRICATING ANY MATERIAL.

	BY	CHECKED
DESIGN	H. Vu	J. Ki Jung
DETAILS	R. Kirkland / Y. Tang	J. Ki Jung
QUANTITIES	H. Vu	J. Ki Jung

STATE OF CALIFORNIA
DEPARTMENT OF TRANSPORTATION

DIVISION OF ENGINEERING SERVICES
STRUCTURE DESIGN
DESIGN BRANCH 10

BRIDGE NO. 54-1306S
POST MILE 0.62

HIGHGROVE UP (SHOOFLY) VIADUCT
ABUTMENT DETAILS NO. 1

STRUCTURES DESIGN DETAIL SHEET (ENGLISH) (REV. 09-01-10)

ORIGINAL SCALE IN INCHES FOR REDUCED PLANS 0 1 2 3

UNIT: 3589
PROJECT NUMBER & PHASE: 08000005061
CONTRACT NO.: 08-0m9401

DISREGARD PRINTS BEARING EARLIER REVISION DATES → 12-05-11

REVISION DATES | SHEET 5 OF 17

FILE => 541306sfad105.dgn

USERNAME => s124496 DATE PLOTTED => 18-APR-2012 TIME PLOTTED => 08:16

DIST	COUNTY	ROUTE	POST MILES TOTAL PROJECT	SHEET No.	TOTAL SHEETS
08	Riv,SBd	91,215	21.5/21.7, 43.2/45.2,0.0/5.1	1732	1743

REGISTERED CIVIL ENGINEER — DATE 4-06-12

4-16-12
PLANS APPROVAL DATE

REGISTERED PROFESSIONAL ENGINEER — LARRY WU — No. C57035 — Exp. 6-30-13 — CIVIL — STATE OF CALIFORNIA

The State of California or its officers or agents shall not be responsible for the accuracy or completeness of electronic copies of this plan sheet.

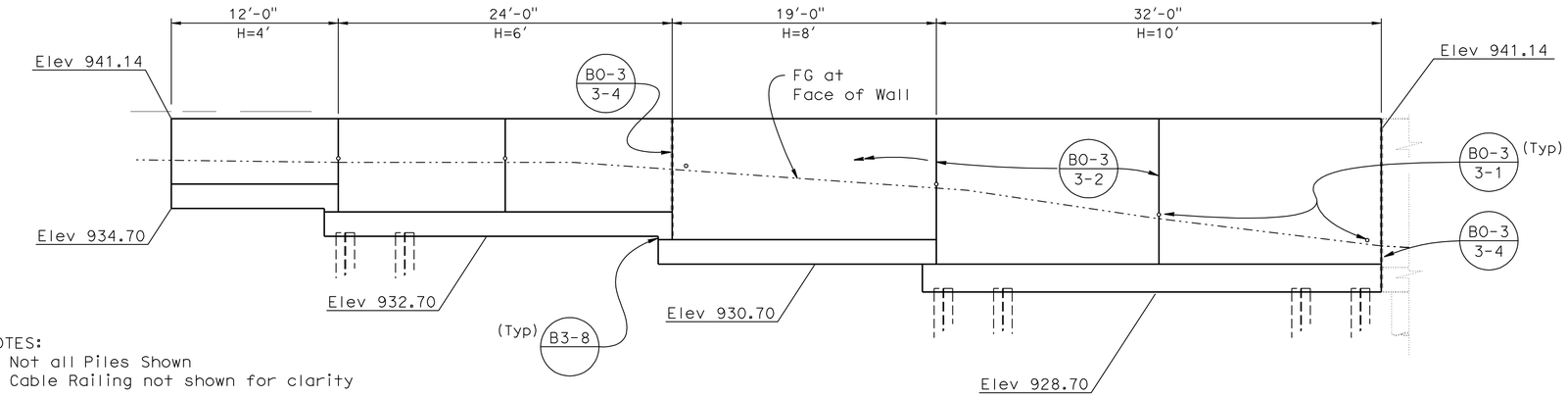

NOTES:
1. Not all Piles Shown
2. Cable Railing not shown for clarity

MIRRORED ELEVATION

3/16" = 1'-0"

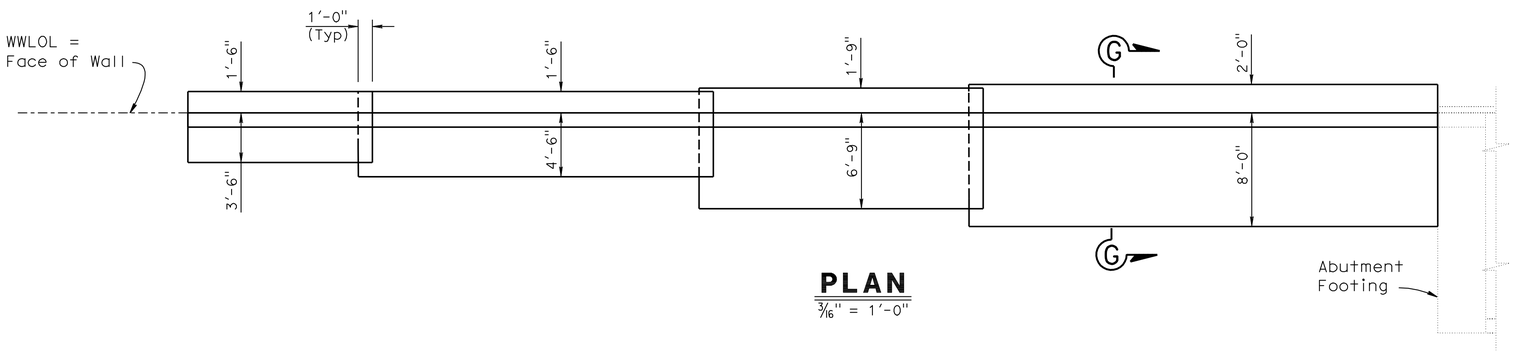

PLAN

3/16" = 1'-0"

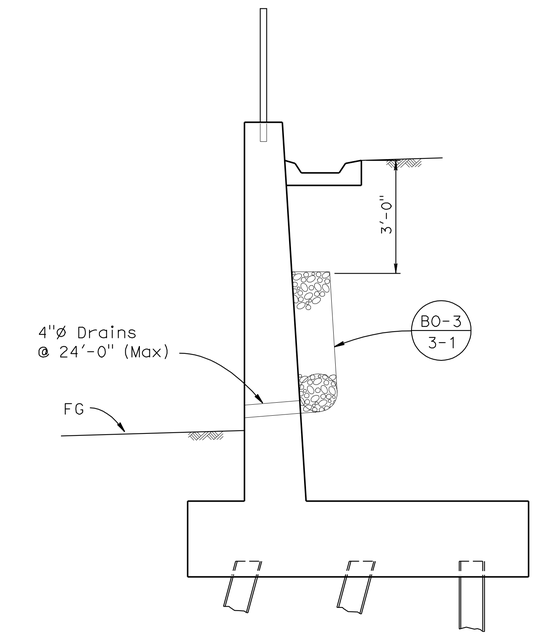

TYPICAL SECTION

1/2" = 1'-0"

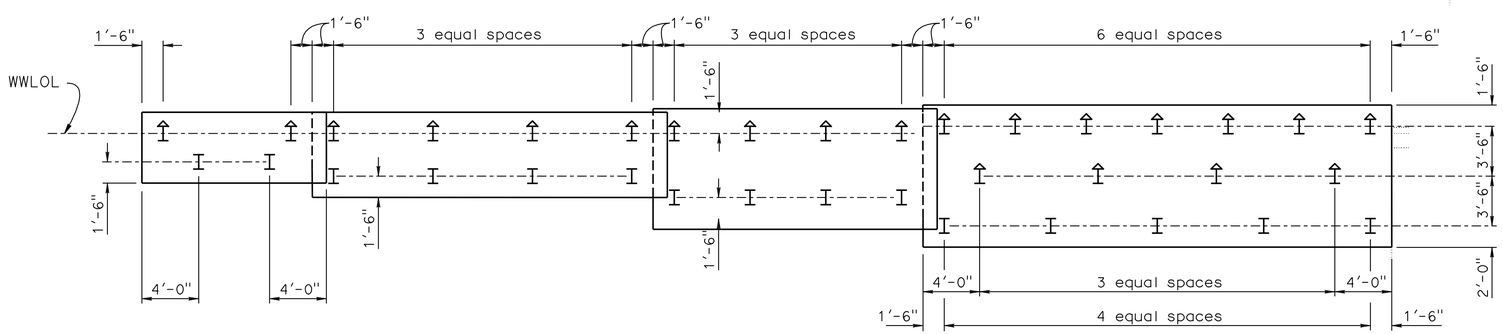

PILE LAYOUT

3/16" = 1'-0"

NOTES:

1. For Section G-G, see "ABUT NO. 1 WINGWALL DETAILS" sheet.

NOTE:
THE CONTRACTOR SHALL VERIFY ALL CONTROLLING FIELD DIMENSIONS BEFORE ORDERING OR FABRICATING ANY MATERIAL.

LEGEND:

I — Indicates Vertical Piles

I — Indicates Battered Piles at 1:3

	BY	CHECKED
DESIGN	H. Vu	R. Stiltz
DETAILS	R. Kirkland / Y. Tang	R. Stiltz
QUANTITIES	H. Vu	

STATE OF CALIFORNIA
DEPARTMENT OF TRANSPORTATION

DIVISION OF ENGINEERING SERVICES
STRUCTURE DESIGN
DESIGN BRANCH 10

BRIDGE NO. 54-1306S
POST MILE 0.62

HIGHGROVE UP (SHOOFLY) VIADUCT
ABUT NO. 1 WINGWALL LAYOUT

STRUCTURES DESIGN DETAIL SHEET (ENGLISH) (REV. 09-01-10)

ORIGINAL SCALE IN INCHES FOR REDUCED PLANS 0 1 2 3

UNIT: 3589
PROJECT NUMBER & PHASE: 08000005061
CONTRACT NO.: 08-0m9401

DISREGARD PRINTS BEARING EARLIER REVISION DATES

REVISION DATES: 12-02-11

SHEET 6 OF 17

FILE => 541306sfwwlo_06.dgn

USERNAME => s124436 DATE PLOTTED => 18-APR-2012 TIME PLOTTED => 08:16

DIST	COUNTY	ROUTE	POST MILES TOTAL PROJECT	SHEET No.	TOTAL SHEETS
08	Riv,SBd	91,215	21.5/21.7, 43.2/45.2,0.0/5.1	1733	1743

REGISTERED CIVIL ENGINEER — DATE 4-06-12

4-16-12
PLANS APPROVAL DATE

REGISTERED PROFESSIONAL ENGINEER — LARRY WU — No. C57035 — Exp. 6-30-13 — CIVIL — STATE OF CALIFORNIA

The State of California or its officers or agents shall not be responsible for the accuracy or completeness of electronic copies of this plan sheet.

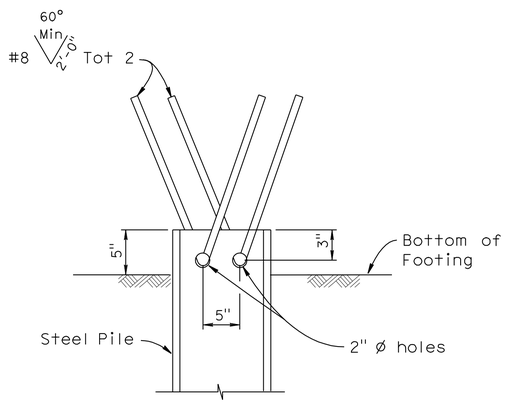

STEEL PILE ANCHOR

No Scale

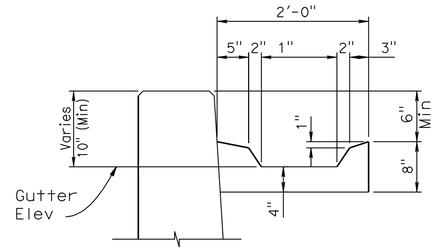

GUTTER DETAIL

1" = 1'-0"

TABLE OF REINFORCING STEEL DIMENSIONS AND DATA				
Design H	10'	8'	6'	4'
W	9'-0"	8'-0"	6'-0"	5'-0"
F	2'-0"	1'-9"	1'-9"	1'-9"
C	2'-0"	1'-9"	1'-6"	1'-6"
Batter	3/4:12	5/8:12	1/2:12	1/2:12
(a) bars	#8 @ 12	#8 @ 18	#5 @ 12	#5 @ 12
Short (a) bars	#8 @ 12	#8 @ 18	#5 @ 12	#5 @ 12
(b) bars	#5 @ 8	#5 @ 8	#5 @ 16	#5 @ 16

NOTES:

1. For details not shown and drainage notes see B3-8 B3-9
2. For wall stem joint details see B0-3 3-2 B0-3 3-4
3. Alternate (a) and short (a) bars

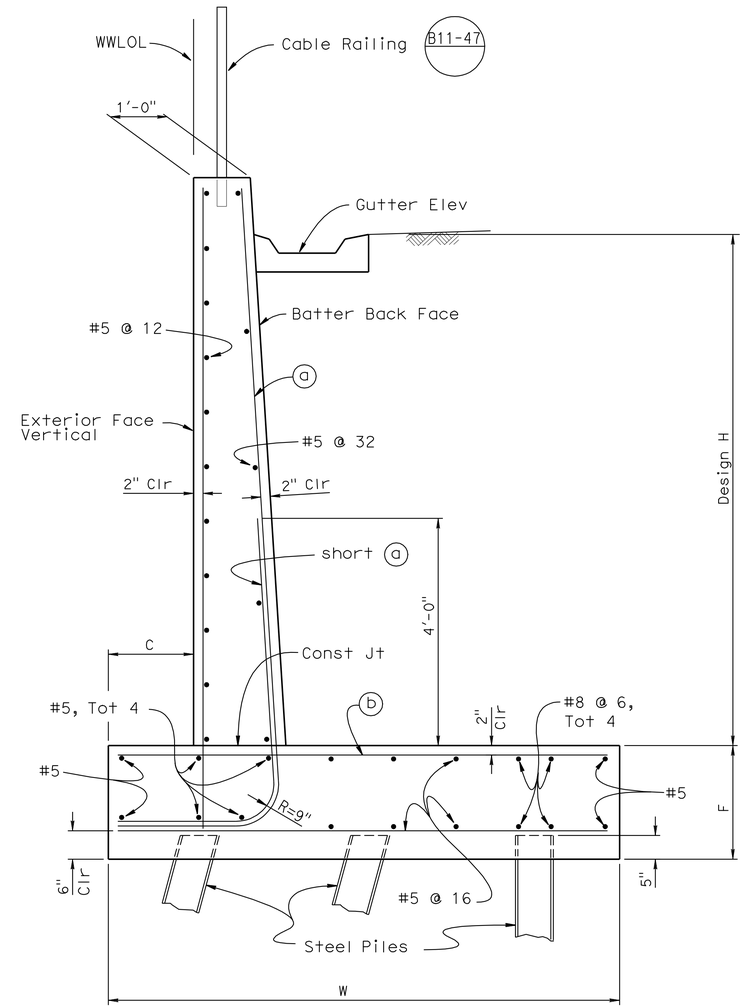

SECTION G-G

3/4" = 1'-0"

NOTE:
THE CONTRACTOR SHALL VERIFY ALL CONTROLLING FIELD DIMENSIONS BEFORE ORDERING OR FABRICATING ANY MATERIAL.

	BY	CHECKED
DESIGN	H. Vu	R. Stiltz
DETAILS	R. Kirkland	R. Stiltz
QUANTITIES	H. Vu	

STATE OF CALIFORNIA
DEPARTMENT OF TRANSPORTATION

DIVISION OF ENGINEERING SERVICES
STRUCTURE DESIGN
DESIGN BRANCH 10

BRIDGE NO. 54-1306S
POST MILE 0.62

HIGHGROVE UP (SHOOFLY) VIADUCT
ABUT NO. 1 WINGWALL DETAILS

STRUCTURES DESIGN DETAIL SHEET (ENGLISH) (REV. 09-01-10)

ORIGINAL SCALE IN INCHES FOR REDUCED PLANS 0 1 2 3

UNIT: 3589
PROJECT NUMBER & PHASE: 08000005061
CONTRACT NO.: 08-0m9401

DISREGARD PRINTS BEARING EARLIER REVISION DATES

REVISION DATES 12-02-11

SHEET 7 OF 17

FILE => 541306sgwwdt07.dgn

USERNAME => s124496 DATE PLOTTED => 18-APR-2012 TIME PLOTTED => 08:16

DIST	COUNTY	ROUTE	POST MILES TOTAL PROJECT	SHEET No.	TOTAL SHEETS
08	Riv,SBd	91,215	21.5/21.7, 43.2/45.2,0.0/5.1	1734	1743

REGISTERED CIVIL ENGINEER — DATE 4-06-12

4-16-12
PLANS APPROVAL DATE

REGISTERED PROFESSIONAL ENGINEER — LARRY WU No. C57035 Exp. 6-30-13 CIVIL — STATE OF CALIFORNIA

The State of California or its officers or agents shall not be responsible for the accuracy or completeness of electronic copies of this plan sheet.

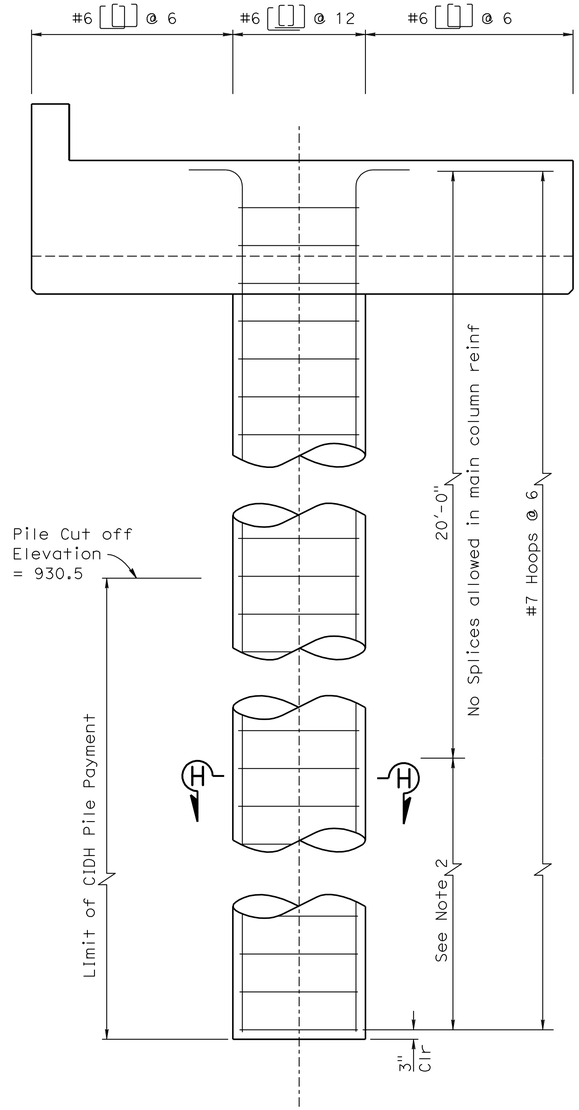

ELEVATION

½" = 1'-0"

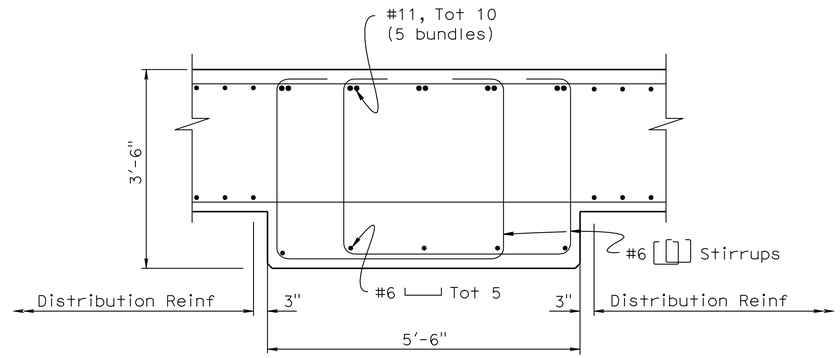

BENT CAP SECTION

¾" = 1'-0"

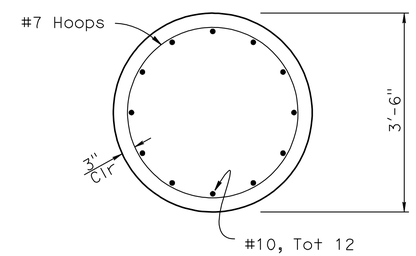

SECTION H-H

¾" = 1'-0"

NOTES:

1. All hoops shall be ultimate butt splices
2. Only ultimate butt splices are allowed in main reinf in this zone
3. See "INDEX TO PLAN SHEET" for pile data

NOTE:
THE CONTRACTOR SHALL VERIFY ALL CONTROLLING FIELD DIMENSIONS BEFORE ORDERING OR FABRICATING ANY MATERIAL.

	BY	CHECKED
DESIGN	H. Vu	J. Ki Jung
DETAILS	Y. Tang	J. Ki Jung
QUANTITIES	H. Vu	

STATE OF CALIFORNIA
DEPARTMENT OF TRANSPORTATION

DIVISION OF ENGINEERING SERVICES
STRUCTURE DESIGN
DESIGN BRANCH 10

BRIDGE NO. 54-1306S
POST MILE 0.62

HIGHGROVE UP (SHOOFLY) VIADUCT
BENT DETAILS

STRUCTURES DESIGN DETAIL SHEET (ENGLISH) (REV. 09-01-10)

ORIGINAL SCALE IN INCHES FOR REDUCED PLANS 0 1 2 3

UNIT: 3589
PROJECT NUMBER & PHASE: 08000005061
CONTRACT NO.: 08-0m9401

DISREGARD PRINTS BEARING EARLIER REVISION DATES

REVISION DATES 12-05-11

SHEET 8 OF 17

FILE => 541306shbdt08.dgn

USERNAME => s124496 DATE PLOTTED => 18-APR-2012 TIME PLOTTED => 08:16

DIST	COUNTY	ROUTE	POST MILES TOTAL PROJECT	SHEET No.	TOTAL SHEETS
08	Riv,SBd	91,215	21.5/21.7, 43.2/45.2,0.0/5.1	1735	1743

REGISTERED CIVIL ENGINEER 12-30-11 DATE

4-16-12
PLANS APPROVAL DATE

REGISTERED PROFESSIONAL ENGINEER LARRY WU No. C57035 Exp. 6-30-13 CIVIL STATE OF CALIFORNIA

The State of California or its officers or agents shall not be responsible for the accuracy or completeness of electronic copies of this plan sheet.

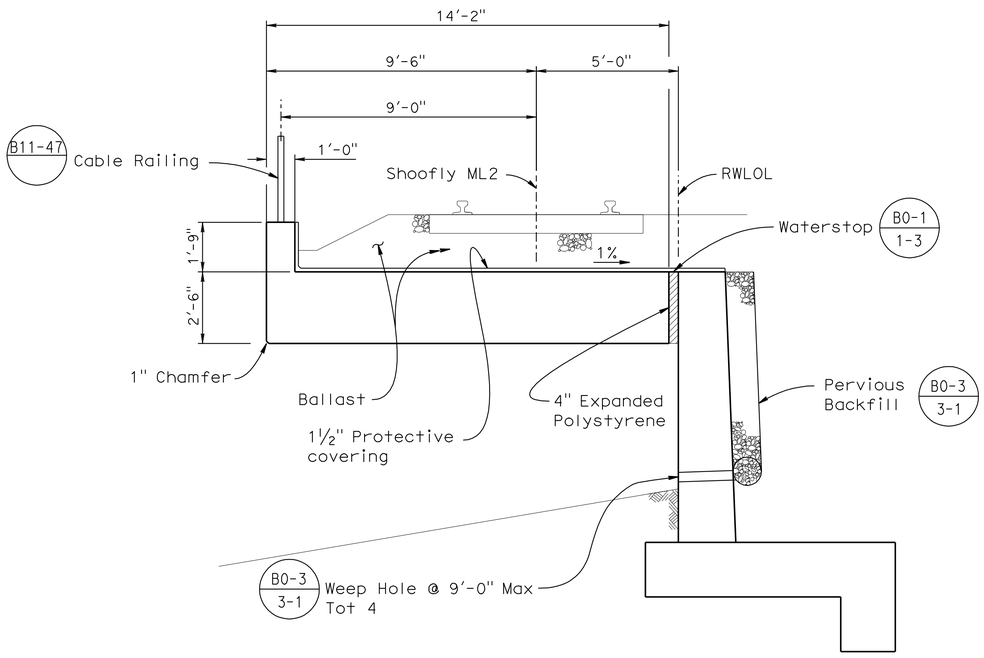

TYPICAL SECTION

⅜" = 1'-0"

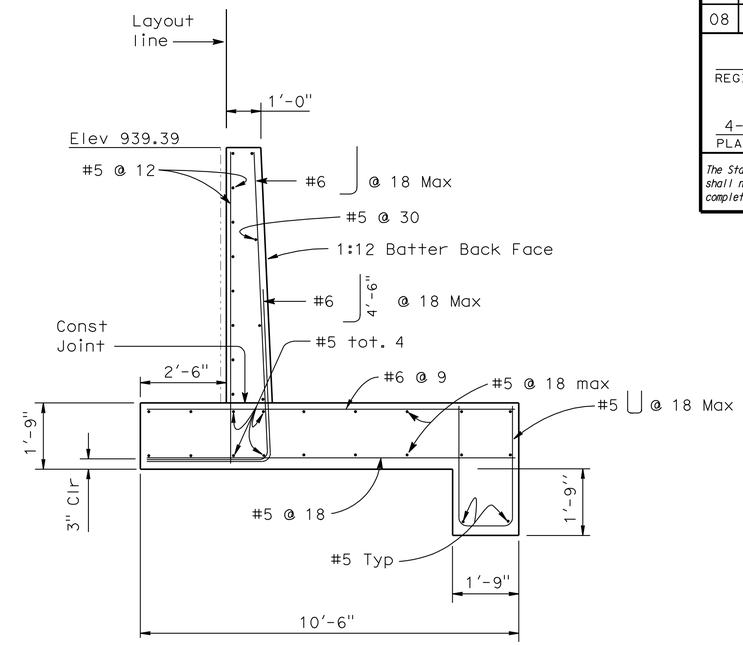

SECTION F-F

½" = 1'-0"

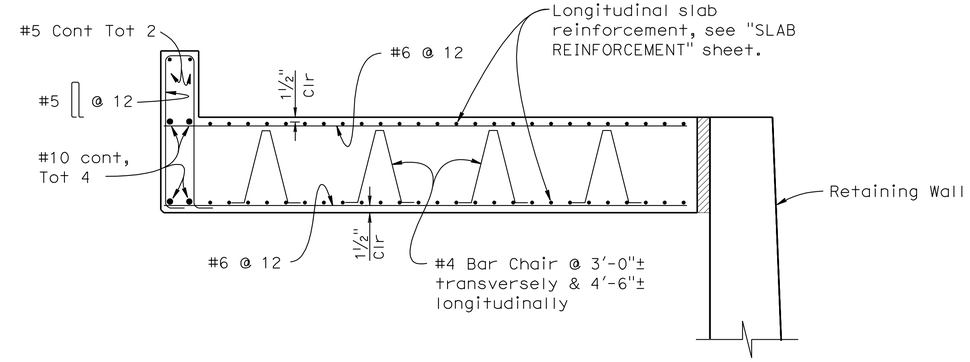

SLAB REINFORCEMENT SECTION

½" = 1'-0"

NOTE:
THE CONTRACTOR SHALL VERIFY ALL CONTROLLING FIELD DIMENSIONS BEFORE ORDERING OR FABRICATING ANY MATERIAL.

	BY	CHECKED
DESIGN	H. Vu	J. Ki Jung
DETAILS	R. Kirkland	J. Ki Jung
QUANTITIES	H. Vu	J. Ki Jung

STATE OF CALIFORNIA
DEPARTMENT OF TRANSPORTATION

DIVISION OF ENGINEERING SERVICES
STRUCTURE DESIGN
DESIGN BRANCH 10

BRIDGE NO. 54-1306S
POST MILE 0.62

HIGHGROVE UP (SHOOFLY) VIADUCT
TYPICAL SECTION

STRUCTURES DESIGN DETAIL SHEET (ENGLISH) (REV. 09-01-10)

ORIGINAL SCALE IN INCHES FOR REDUCED PLANS 0 1 2 3

UNIT: 3589
PROJECT NUMBER & PHASE: 08000005061
CONTRACT NO.: 08-0m9401

DISREGARD PRINTS BEARING EARLIER REVISION DATES

REVISION DATES 12-05-11

SHEET 9 OF 17

FILE => 541306skts09.dgn

USERNAME => s124496 DATE PLOTTED => 18-APR-2012 TIME PLOTTED => 08:16

DIST	COUNTY	ROUTE	POST MILES TOTAL PROJECT	SHEET No.	TOTAL SHEETS
08	Riv,SBd	91,215	21.5/21.7, 43.2/45.2,0.0/5.1	1736	1743

REGISTERED CIVIL ENGINEER 12-30-11 DATE

4-16-12
PLANS APPROVAL DATE

REGISTERED PROFESSIONAL ENGINEER LARRY WU No. C57035 Exp. 6-30-13 CIVIL STATE OF CALIFORNIA

The State of California or its officers or agents shall not be responsible for the accuracy or completeness of electronic copies of this plan sheet.

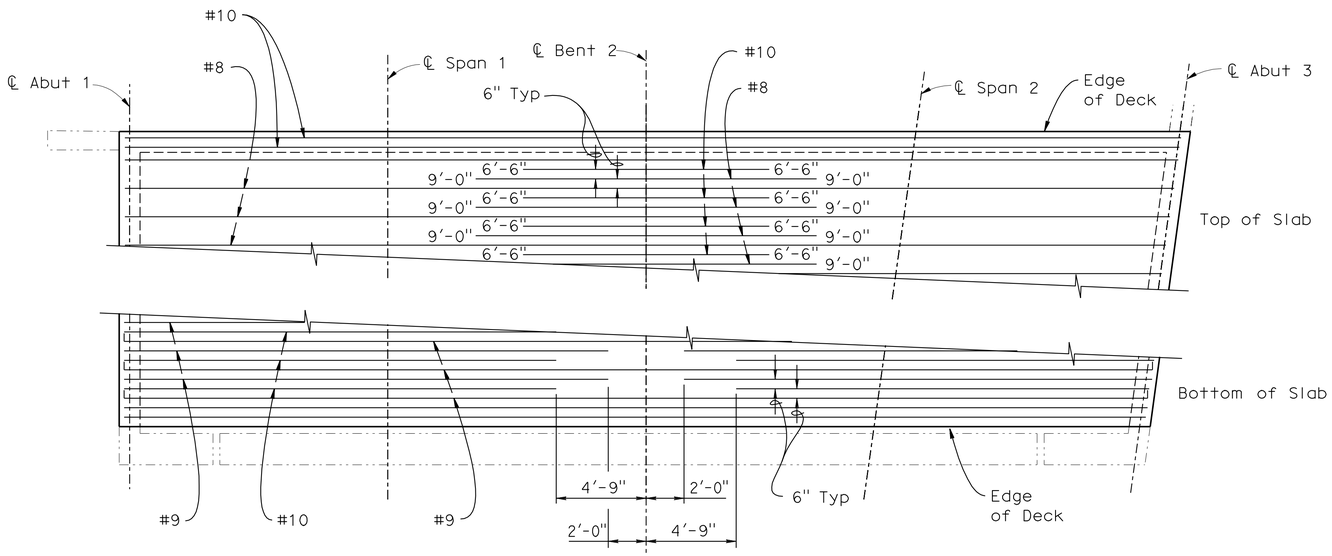

SLAB REINFORCEMENT PLAN

No Scale

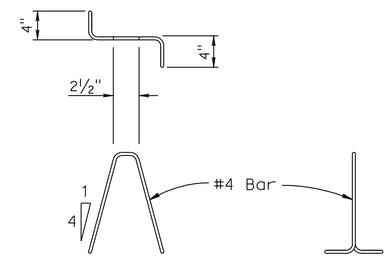

BAR CHAIR DETAIL

No Scale

BAR SPLICE LENGTH

BAR SIZE	#4	#5	#6	#7	#8	#9	#10	#11
All Bars, except top bars	23"	28"	34"	39"	45"	68"	76"	85"
Top Bars	23"	28"	34"	53"	60"	77"	97"	120"

REINFORCEMENT NOTES:

Splices in top main bars to be located near center of span.
Splices in bottom main bars to be located near bent.
Spacing of all transverse bars is measured along ℄ track.

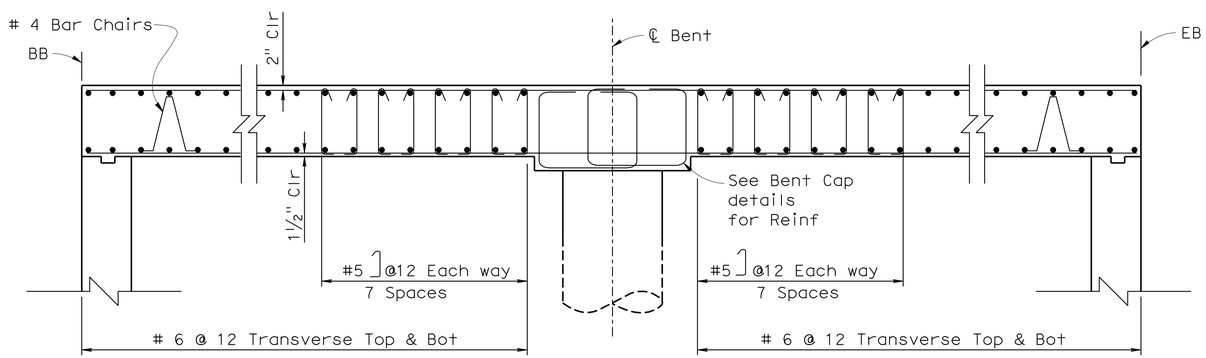

LONGITUDINAL SECTION

No Scale

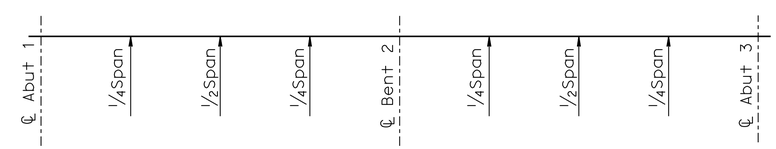

CAMBER DIAGRAM

No Scale

Note: Camber does not include allowance for Falsework Settlement

NOTE:
THE CONTRACTOR SHALL VERIFY ALL CONTROLLING FIELD DIMENSIONS BEFORE ORDERING OR FABRICATING ANY MATERIAL.

	BY	CHECKED
DESIGN	H. Vu	J. Ki Jung
DETAILS	R. Kirkland / Y. Tang	J. Ki Jung
QUANTITIES	H. Vu	J. Ki Jung

STATE OF CALIFORNIA
DEPARTMENT OF TRANSPORTATION

DIVISION OF ENGINEERING SERVICES
STRUCTURE DESIGN
DESIGN BRANCH 10

BRIDGE NO. 54-1306S
POST MILE 0.62

HIGHGROVE UP (SHOOFLY) VIADUCT
SLAB REINFORCEMENT

STRUCTURES DESIGN DETAIL SHEET (ENGLISH) (REV. 09-01-10)

ORIGINAL SCALE IN INCHES FOR REDUCED PLANS 0 1 2 3

UNIT: 3589
PROJECT NUMBER & PHASE: 08000005061
CONTRACT NO.: 08-0m9401

DISREGARD PRINTS BEARING EARLIER REVISION DATES 12-02-11

SHEET 10 OF 17

FILE => 541306sosib_rf10.dgn

USERNAME => s124496 DATE PLOTTED => 18-APR-2012 TIME PLOTTED => 08:17

DIST	COUNTY	ROUTE	POST MILES TOTAL PROJECT	SHEET No	TOTAL SHEETS
08	Riv,SBd	91,215	21.5/21.7, 43.2/45.2,0.0/5.1	1737	1743

PROFESSIONAL GEOLOGIST 1-18-12

4-16-12
PLANS APPROVAL DATE

PROFESSIONAL GEOLOGIST Hector Valencia No. 7776 Exp. 2-28-14 STATE OF CALIFORNIA

The State of California or its officers or agents shall not be responsible for the accuracy or completeness of electronic copies of this plan sheet.

This LOTB sheet was prepared in accordance with the Caltrans Soil & Rock Logging, Classification, & Presentation Manual (2010 Edition).

BENCH MARK

PNO 630
N 1,832,297.50
E 6,763,657.81
1" IP W/CALTRANS RP PLUG
Elev 938.24'
Vertical Datum: NAVD88

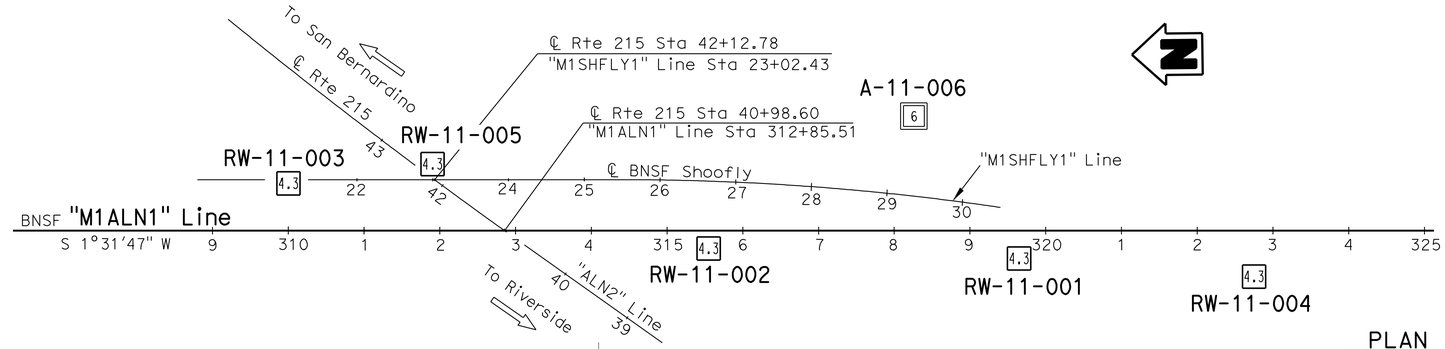

PLAN

1" = 100'

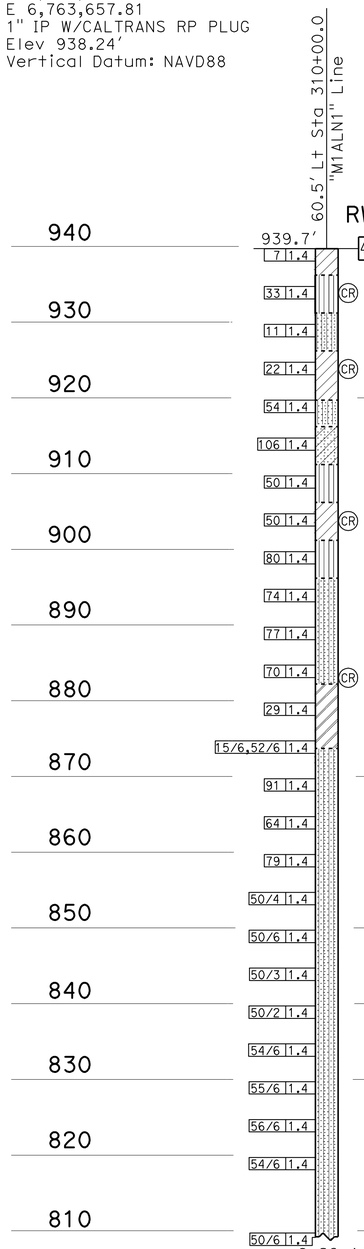

940 — Lean CLAY with SAND (CL); very stiff; brown; moist; little fine and medium SAND; trace fine GRAVEL; PP=3.5 tsf.

SILT with SAND (ML); dense; brown; moist; little fine and medium SAND; trace fine GRAVEL.

930 — SILTY SAND (SM); medium dense; brown; moist; fine and medium SAND; some fines; trace fine GRAVEL.

920 — Lean CLAY with SAND (CL); very stiff; brown; moist; little fine and medium SAND; PP=3.0 tsf.

SILTY SAND (SM); very dense; brown; moist; from fine to coarse SAND; some fines; trace fine GRAVEL.

910 — CLAYEY SAND (SC); very dense; brown; moist; from fine to coarse SAND; some fines.

SILT with SAND (ML); very dense; yellowish brown; moist; little fine SAND.

900 — SANDY CLAY (CL); very stiff; brown; moist; some from fine to coarse SAND; PP=3.0 tsf.

SILT with SAND (ML); very dense; yellowish brown; moist; little fine SAND.

890 — SILTY SAND (SM); very dense; yellowish brown; moist; mostly fine and medium SAND; some fines; trace coarse SAND; trace fine GRAVEL.

-light yellowish brown.

880 — Fat CLAY with SAND (CH); very stiff; yellowish brown; moist; little fine SAND; PP=2.0 tsf.

870 — SILTY SAND (SM); very dense; light olive brown; moist; from fine to coarse SAND; little fines; few fine and coarse GRAVEL.

860 — -mostly fine SAND.

-mostly from fine to coarse SAND.

850 — -mostly fine and medium SAND.

840 — -mostly from fine to coarse SAND.

830 — -mostly fine and medium SAND.

820 — -mostly from fine to coarse SAND.

-mostly fine to medium SAND.

810

Note: Groundwater was not encountered in Borings RW-11-001, RW-11-002, RW-11-003, RW-11-004, A-11-006. Groundwater was encountered in Boring RW-11-005.

PROFILE

Horiz: 1" = 10'
Vert: 1" = 10'

311+00

ENGINEERING SERVICES	MATERIALS AND GEOTECHNICAL SERVICES	STATE OF CALIFORNIA DEPARTMENT OF TRANSPORTATION	DIVISION OF ENGINEERING SERVICES STRUCTURE DESIGN DESIGN BRANCH 10	BRIDGE NO. 54-1306S POST MILE 0.62	HIGHGROVE UP (SHOOFLY) VIADUCT LOG OF TEST BORINGS 1 OF 7
FUNCTIONAL SUPERVISOR NAME: M. DeSalvatore	DRAWN BY: W. Tang 09/11 CHECKED BY: S. Logeswaran	FIELD INVESTIGATION BY: H. Valencia			

OGS CIVIL LOG OF TEST BORINGS SHEET

ORIGINAL SCALE IN INCHES FOR REDUCED PLANS 0 1 2 3

UNIT: 3643
PROJECT NUMBER & PHASE: 08000005061 CONTRACT NO.: 08-0M9401

DISREGARD PRINTS BEARING EARLIER REVISION DATES

REVISION DATES 01-09-12 01-13-12 01-17-12 SHEET 11 OF 17

FILE => 541306szltb11.dgn

USERNAME => s124396 DATE PLOTTED => 18-APR-2012 TIME PLOTTED => 16:34

DIST	COUNTY	ROUTE	POST MILES TOTAL PROJECT	SHEET No	TOTAL SHEETS
08	Riv,SBd	91,215	21.5/21.7, 43.2/45.2,0.0/5.1	1738	1743

PROFESSIONAL GEOLOGIST 1-18-12

4-16-12
PLANS APPROVAL DATE

PROFESSIONAL GEOLOGIST Hector Valencia No. 7776 Exp. 2-28-14 STATE OF CALIFORNIA

The State of California or its officers or agents shall not be responsible for the accuracy or completeness of electronic copies of this plan sheet.

This LOTB sheet was prepared in accordance with the Caltrans Soil & Rock Logging, Classification, & Presentation Manual (2010 Edition).

FOR PLAN VIEW, SEE
"LOG OF TEST BORINGS 1 OF 7"

83.0' Lt Sta 311+92.0
"M1ALN1" Line

RW-11-005

918.6'

4.3 ASPHALT CONCRETE (3").
SILTY SAND with GRAVEL (SM); gray; dry; fine and medium SAND; some fines; little fine GRAVEL; (FILL).
CLAYEY SAND (SC); medium dense; brown; moist; fine and medium SAND; some fines; few fine GRAVEL.

CLAYEY SAND with GRAVEL (SC) thickly bedded with scattered moderately thick interbeds of elastic SILT with SAND (MH). SAND (SC); very dense; brown; moist; from fine to coarse SAND; some fines; little fine and coarse GRAVEL. SILT (MH); hard; brown; moist; little fine SAND; PP=4.0 tsf.

SILT with SAND (ML); very dense; brown; moist; little fine SAND.

SILTY SAND (SM); very dense; brown moist; mostly fine and medium SAND; some fines; few fine and coarse GRAVEL; few coarse SAND.

SILTY SAND (SM); very dense; light yellowish brown; moist; from fine to coarse SAND; little fines; few fine and coarse GRAVEL.

Poorly-graded SAND (SP); very dense; light yellowish brown; moist; mostly fine SAND; few fine and coarse GRAVEL; trace fines; trace medium and coarse SAND.

Fat CLAY (CH); hard; light olive brown; moist; few fine SAND; PP=2.5 to 3.5 tsf.

Poorly-graded SAND (SP) thickly bedded with scattered thin interbeds of Lean CLAY (CL). SAND (SP); very dense; light olive brown; moist; fine SAND; trace fines; few fine gravel. CLAY (CL); from very stiff to hard; light olive brown; moist; PP=3.0 to 4.0 tsf.

Well-graded SAND with GRAVEL (SW); very dense; light olive brown; moist; little fine and coarse GRAVEL; trace fines.

SILTY SAND (SM); very dense; light olive brown; moist; fine SAND; some fines.

SILTY SAND with GRAVEL (SM); very dense; light olive brown; moist; from fine to coarse SAND; little fines; little fine and coarse GRAVEL.

-mostly fine and medium SAND.

-mostly from fine to coarse SAND.

-scattered (~10%) moderately thick zones with some fine and coarse GRAVEL.

GWS Elev 807.2'
10-13-11

7-14-11
Terminated at Elev 757.8'
ERi = 74%

920 910 900 890 880 870 860 850 840 830 820 810 800 790 780 770 760

16 1.4 | 57 1.4 | 59 1.4 | 57 1.4 | 79 1.4 | 64 1.4 | 60 1.4 | 48 1.4 | 91 1.4 | 49 1.4 | 50/4 1.4 | 52/6 1.4 | 68 1.4 | 62/6 1.4 | 50/3 1.4 | 50/6 1.4 | 53/6 1.4 | 50/3 1.4 | 50/2 1.4 | 50/3 1.4 | 50/4 1.4 | 50/1 1.4 | 50/3 1.4 | 50/4 1.4 | 50/3 1.4

311+50 312+50 313+50

PROFILE
Horiz: 1" = 10'
Vert: 1" = 10'

ENGINEERING SERVICES		MATERIALS AND GEOTECHNICAL SERVICES	STATE OF CALIFORNIA DEPARTMENT OF TRANSPORTATION	DIVISION OF ENGINEERING SERVICES STRUCTURE DESIGN DESIGN BRANCH 10	BRIDGE NO. 54-1306S POST MILE 0.62	HIGHGROVE UP (SHOOFLY) VIADUCT LOG OF TEST BORINGS 2 OF 7
FUNCTIONAL SUPERVISOR NAME: M. DeSalvatore	DRAWN BY: W. Tang 09/11 CHECKED BY: S. Logeswaran	FIELD INVESTIGATION BY: H. Valencia				

OGS CIVIL LOG OF TEST BORINGS SHEET

ORIGINAL SCALE IN INCHES FOR REDUCED PLANS 0 1 2 3

UNIT: 3643
PROJECT NUMBER & PHASE: 08000005061 CONTRACT NO.: 08-0M9401

DISREGARD PRINTS BEARING EARLIER REVISION DATES → REVISION DATES 01-09-12 01-13-12

SHEET 12 OF 17

FILE => 541306szltb12.dgn

USERNAME => s124496 DATE PLOTTED => 18-APR-2012 TIME PLOTTED => 16:34

DIST	COUNTY	ROUTE	POST MILES TOTAL PROJECT	SHEET No	TOTAL SHEETS
08	Riv,SBd	91,215	21.5/21.7, 43.2/45.2,0.0/5.1	1739	1743

PROFESSIONAL GEOLOGIST 1-18-12

4-16-12
PLANS APPROVAL DATE

PROFESSIONAL GEOLOGIST Hector Valencia No. 7776 Exp. 2-28-14 STATE OF CALIFORNIA

The State of California or its officers or agents shall not be responsible for the accuracy or completeness of electronic copies of this plan sheet.

This LOTB sheet was prepared in accordance with the Caltrans Soil & Rock Logging, Classification, & Presentation Manual (2010 Edition).

FOR PLAN VIEW, SEE
"LOG OF TEST BORINGS 1 OF 7"

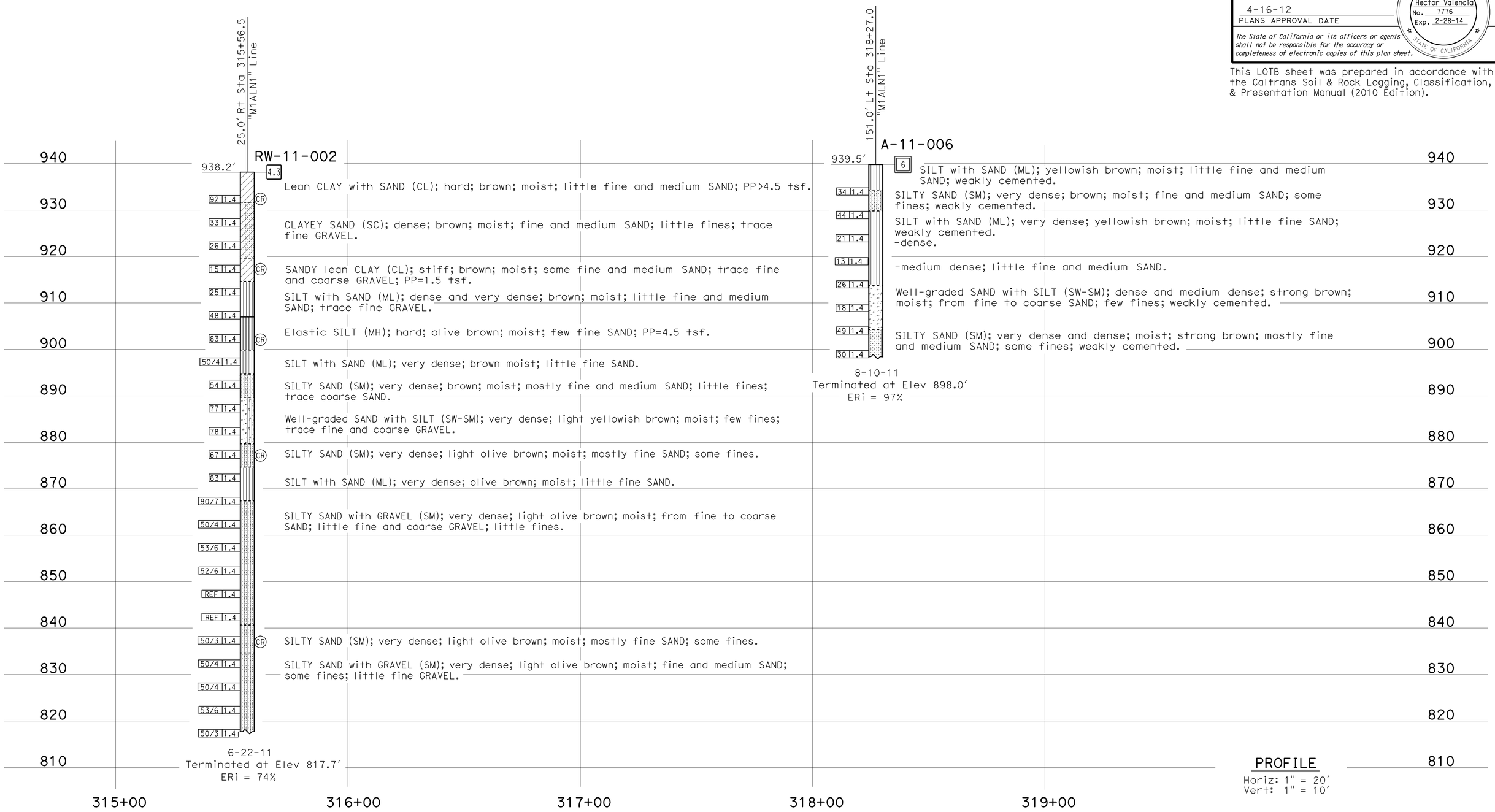

ENGINEERING SERVICES	MATERIALS AND GEOTECHNICAL SERVICES	STATE OF CALIFORNIA DEPARTMENT OF TRANSPORTATION	DIVISION OF ENGINEERING SERVICES STRUCTURE DESIGN DESIGN BRANCH 10	BRIDGE NO. 54-1306S POST MILE 0.62	HIGHGROVE UP (SHOOFLY) VIADUCT LOG OF TEST BORINGS 3 OF 7
FUNCTIONAL SUPERVISOR NAME: M. DeSalvatore	DRAWN BY: W. Tang 09/11 CHECKED BY: S. Logeswaran	FIELD INVESTIGATION BY: H. Valencia / M. Wilson			

OGS CIVIL LOG OF TEST BORINGS SHEET

ORIGINAL SCALE IN INCHES FOR REDUCED PLANS 0 1 2 3

UNIT: 3643
PROJECT NUMBER & PHASE: 08000005061 CONTRACT NO.: 08-0M9401

DISREGARD PRINTS BEARING EARLIER REVISION DATES

REVISION DATES 01-10-12 01-13-12 SHEET 13 OF 17

FILE => 541306szltb13.dgn

USERNAME => s124096 DATE PLOTTED => 18-APR-2012 TIME PLOTTED => 16:34

DIST	COUNTY	ROUTE	POST MILES TOTAL PROJECT	SHEET No	TOTAL SHEETS
08	Riv,SBd	91,215	21.5/21.7, 43.2/45.2,0.0/5.1	1740	1743

PROFESSIONAL GEOLOGIST 1-18-12

4-16-12
PLANS APPROVAL DATE

PROFESSIONAL GEOLOGIST Hector Valencia No. 7776 Exp. 2-28-14 STATE OF CALIFORNIA

The State of California or its officers or agents shall not be responsible for the accuracy or completeness of electronic copies of this plan sheet.

This LOTB sheet was prepared in accordance with the Caltrans Soil & Rock Logging, Classification, & Presentation Manual (2010 Edition).

FOR PLAN VIEW, SEE
"LOG OF TEST BORINGS 1 OF 7"

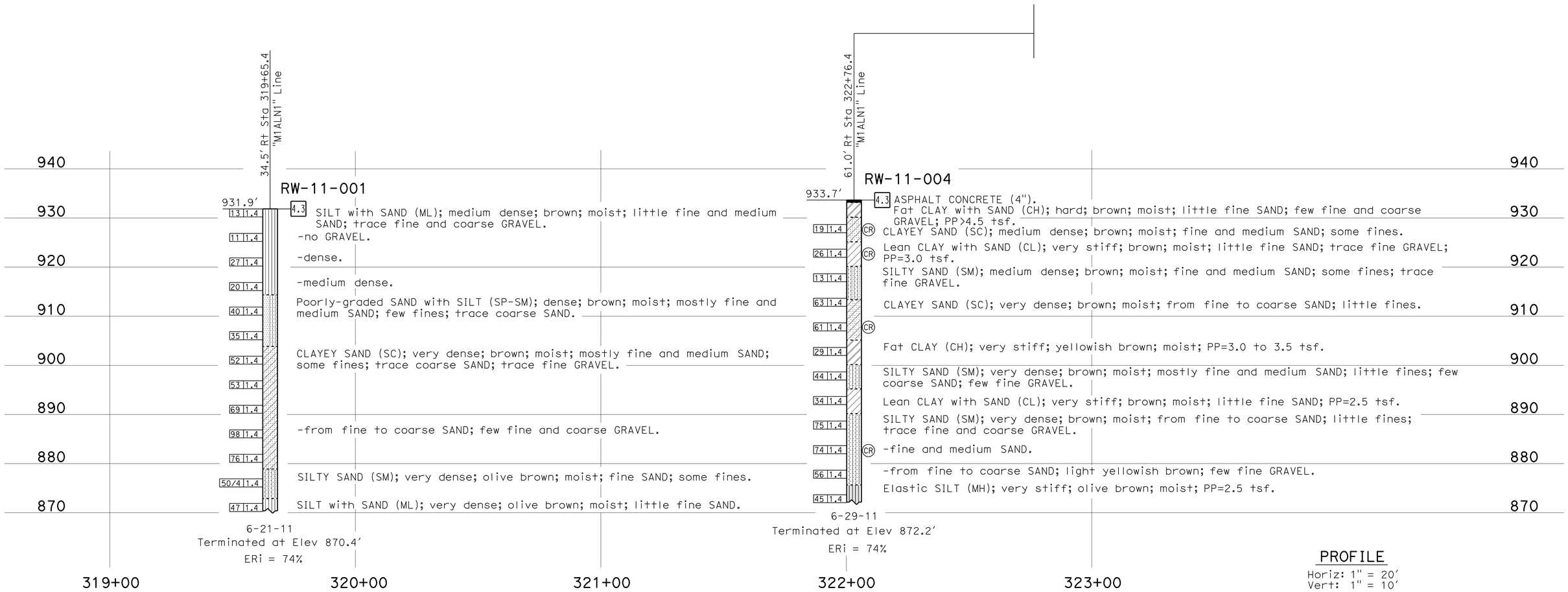

ENGINEERING SERVICES	MATERIALS AND GEOTECHNICAL SERVICES	STATE OF CALIFORNIA DEPARTMENT OF TRANSPORTATION	DIVISION OF ENGINEERING SERVICES STRUCTURE DESIGN DESIGN BRANCH 10	BRIDGE NO. 54-1306S POST MILE 0.62	HIGHGROVE UP (SHOOFLY) VIADUCT LOG OF TEST BORINGS 4 OF 7
FUNCTIONAL SUPERVISOR NAME: M. DeSalvatore	DRAWN BY: W. Tang 09/11 CHECKED BY: S. Logeswaran	FIELD INVESTIGATION BY: H. Valencia			

OGS CIVIL LOG OF TEST BORINGS SHEET

ORIGINAL SCALE IN INCHES FOR REDUCED PLANS 0 1 2 3

UNIT: 3643
PROJECT NUMBER & PHASE: 08000005061 CONTRACT NO.: 08-0M9401

DISREGARD PRINTS BEARING EARLIER REVISION DATES

REVISION DATES 01-10-12 01-13-12

SHEET 14 OF 17

FILE => 541306szltb14.dgn

USERNAME => s124496 DATE PLOTTED => 18-APR-2012 TIME PLOTTED => 16:34

DIST	COUNTY	ROUTE	POST MILES TOTAL PROJECT	SHEET No	TOTAL SHEETS
08	Riv,SBd	91,215	21.5/21.7, 43.2/45.2,0.0/5.1	1741	1743

PROFESSIONAL GEOLOGIST 1-18-12

4-16-12
PLANS APPROVAL DATE

PROFESSIONAL GEOLOGIST Hector Valencia No. 7776 Exp. 2-28-14 STATE OF CALIFORNIA

The State of California or its officers or agents shall not be responsible for the accuracy or completeness of electronic copies of this plan sheet.

REFERENCE: CALTRANS SOIL & ROCK LOGGING, CLASSIFICATION, AND PRESENTATION MANUAL (2010)

CEMENTATION

Description	Criteria
Weak	Crumbles or breaks with handling or little finger pressure.
Moderate	Crumbles or breaks with considerable finger pressure.
Strong	Will not crumble or break with finger pressure.

BOREHOLE IDENTIFICATION

Symbol	Hole Type	Description
Size	A	Auger Boring (hollow or solid stem bucket)
Size	R RW RC P	Rotary drilled boring (conventional) Rotary drilled with self-casing wire-line Rotary core with continuously-sampled, self-casing wire-line Rotary percussion boring (air)
Size	R RC	Rotary drilled diamond core Rotary drilled rock core
Size	HD HA	Hand driven (1-inch soil tube) Hand Auger
●	D	Dynamic Cone Penetration Boring
▲	CPT	Cone Penetration Test (ASTM D 5778)
⬚	O	Other (note on LOTB)

Note: Size in inches.

CONSISTENCY OF COHESIVE SOILS

Description	Shear Strength (tsf)	Pocket Penetrometer Measurement, PP, (tsf)	Torvane Measurement, TV, (tsf)	Vane Shear Measurement, VS, (tsf)
Very Soft	Less than 0.12	Less than 0.25	Less than 0.12	Less than 0.12
Soft	0.12 - 0.25	0.25 - 0.5	0.12 - 0.25	0.12 - 0.25
Medium Stiff	0.25 - 0.5	0.5 - 1	0.25 - 0.5	0.25 - 0.5
Stiff	0.5 - 1	1 - 2	0.5 - 1	0.5 - 1
Very Stiff	1 - 2	2 - 4	1 - 2	1 - 2
Hard	Greater than 2	Greater than 4	Greater than 2	Greater than 2

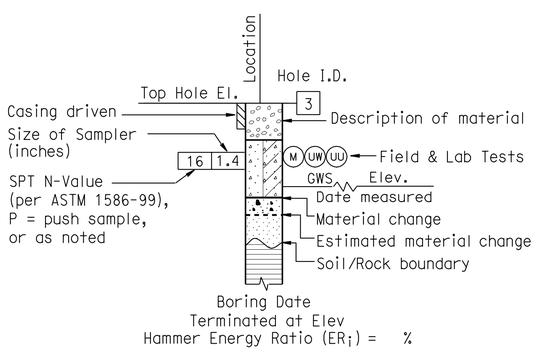

ROTARY BORING

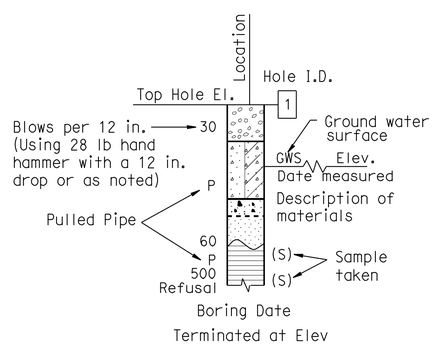

HAND BORING

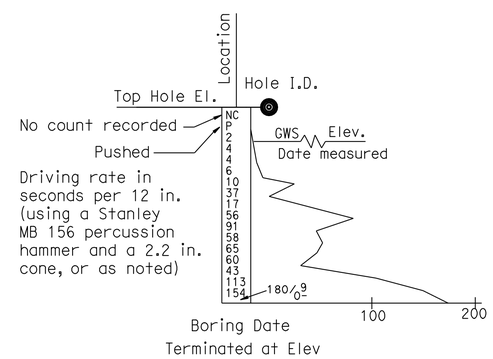

DYNAMIC CONE PENETRATION BORING

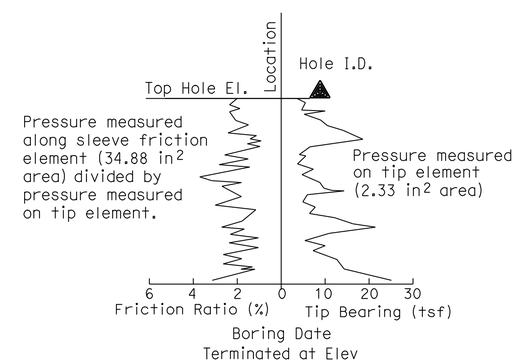

CONE PENETRATION TEST (CPT) BORING

ENGINEERING SERVICES	MATERIALS AND GEOTECHNICAL SERVICES	STATE OF CALIFORNIA DEPARTMENT OF TRANSPORTATION	DIVISION OF ENGINEERING SERVICES STRUCTURE DESIGN DESIGN BRANCH 10	BRIDGE NO. 54-1306S POST MILE 0.62	HIGHGROVE UP (SHOOFLY) VIADUCT LOG OF TEST BORINGS 5 OF 7
	PREPARED BY: W. Tang 09/11				

GS LOTB SOIL LEGEND

ORIGINAL SCALE IN INCHES FOR REDUCED PLANS 0 1 2 3

UNIT: 3643
PROJECT NUMBER & PHASE: 08000005061 CONTRACT NO.: 08-0M9401

DISREGARD PRINTS BEARING EARLIER REVISION DATES

REVISION DATES

SHEET 15 OF 17

FILE => 541306szltb15.dgn

USERNAME => s124496 DATE PLOTTED => 18-APR-2012 TIME PLOTTED => 16:34

REFERENCE: CALTRANS SOIL & ROCK LOGGING, CLASSIFICATION, AND PRESENTATION MANUAL (2010)

DIST	COUNTY	ROUTE	POST MILES TOTAL PROJECT	SHEET No	TOTAL SHEETS
08	Riv,SBd	91,215	21.5/21.7, 43.2/45.2,0.0/5.1	1742	1743

PROFESSIONAL GEOLOGIST 1-18-12

4-16-12
PLANS APPROVAL DATE

PROFESSIONAL GEOLOGIST Hector Valencia No. 7776 Exp. 2-28-14 STATE OF CALIFORNIA

The State of California or its officers or agents shall not be responsible for the accuracy or completeness of electronic copies of this plan sheet.

GROUP SYMBOLS AND NAMES

Graphic/Symbol	Group Names	Graphic/Symbol	Group Names
GW	Well-graded GRAVEL Well-graded GRAVEL with SAND	CL	Lean CLAY Lean CLAY with SAND Lean CLAY with GRAVEL SANDY lean CLAY SANDY lean CLAY with GRAVEL GRAVELLY lean CLAY GRAVELLY lean CLAY with SAND
GP	Poorly-graded GRAVEL Poorly-graded GRAVEL with SAND		
GW-GM	Well-graded GRAVEL with SILT Well-graded GRAVEL with SILT and SAND	CL-ML	SILTY CLAY SILTY CLAY with SAND SILTY CLAY with GRAVEL SANDY SILTY CLAY SANDY SILTY CLAY with GRAVEL GRAVELLY SILTY CLAY GRAVELLY SILTY CLAY with SAND
GW-GC	Well-graded GRAVEL with CLAY (or SILTY CLAY) Well-graded GRAVEL with CLAY and SAND (or SILTY CLAY and SAND)		
GP-GM	Poorly-graded GRAVEL with SILT Poorly-graded GRAVEL with SILT and SAND	ML	SILT SILT with SAND SILT with GRAVEL SANDY SILT SANDY SILT with GRAVEL GRAVELLY SILT GRAVELLY SILT with SAND
GP-GC	Poorly-graded GRAVEL with CLAY (or SILTY CLAY) Poorly-graded GRAVEL with CLAY and SAND (or SILTY CLAY and SAND)		
GM	SILTY GRAVEL SILTY GRAVEL with SAND	OL	ORGANIC lean CLAY ORGANIC lean CLAY with SAND ORGANIC lean CLAY with GRAVEL SANDY ORGANIC lean CLAY SANDY ORGANIC lean CLAY with GRAVEL GRAVELLY ORGANIC lean CLAY GRAVELLY ORGANIC lean CLAY with SAND
GC	CLAYEY GRAVEL CLAYEY GRAVEL with SAND		
GC-GM	SILTY, CLAYEY GRAVEL SILTY, CLAYEY GRAVEL with SAND	OL	ORGANIC SILT ORGANIC SILT with SAND ORGANIC SILT with GRAVEL SANDY ORGANIC SILT SANDY ORGANIC SILT with GRAVEL GRAVELLY ORGANIC SILT GRAVELLY ORGANIC SILT with SAND
SW	Well-graded SAND Well-graded SAND with GRAVEL		
SP	Poorly-graded SAND Poorly-graded SAND with GRAVEL	CH	Fat CLAY Fat CLAY with SAND Fat CLAY with GRAVEL SANDY fat CLAY SANDY fat CLAY with GRAVEL GRAVELLY fat CLAY GRAVELLY fat CLAY with SAND
SW-SM	Well-graded SAND with SILT Well-graded SAND with SILT and GRAVEL		
SW-SC	Well-graded SAND with CLAY (or SILTY CLAY) Well-graded SAND with CLAY and GRAVEL (or SILTY CLAY and GRAVEL)	MH	Elastic SILT Elastic SILT with SAND Elastic SILT with GRAVEL SANDY elastic SILT SANDY elastic SILT with GRAVEL GRAVELLY elastic SILT GRAVELLY elastic SILT with SAND
SP-SM	Poorly-graded SAND with SILT Poorly-graded SAND with SILT and GRAVEL		
SP-SC	Poorly-graded SAND with CLAY (or SILTY CLAY) Poorly-graded SAND with CLAY and GRAVEL (or SILTY CLAY and GRAVEL)	OH	ORGANIC fat CLAY ORGANIC fat CLAY with SAND ORGANIC fat CLAY with GRAVEL SANDY ORGANIC fat CLAY SANDY ORGANIC fat CLAY with GRAVEL GRAVELLY ORGANIC fat CLAY GRAVELLY ORGANIC fat CLAY with SAND
SM	SILTY SAND SILTY SAND with GRAVEL		
SC	CLAYEY SAND CLAYEY SAND with GRAVEL	OH	ORGANIC elastic SILT ORGANIC elastic SILT with SAND ORGANIC elastic SILT with GRAVEL SANDY ORGANIC elastic SILT SANDY ORGANIC elastic SILT with GRAVEL GRAVELLY ORGANIC elastic SILT GRAVELLY ORGANIC elastic SILT with SAND
SC-SM	SILTY, CLAYEY SAND SILTY, CLAYEY SAND with GRAVEL		
PT	PEAT	OL/OH	ORGANIC SOIL ORGANIC SOIL with SAND ORGANIC SOIL with GRAVEL SANDY ORGANIC SOIL SANDY ORGANIC SOIL with GRAVEL GRAVELLY ORGANIC SOIL GRAVELLY ORGANIC SOIL with SAND
	COBBLES COBBLES and BOULDERS BOULDERS		

FIELD AND LABORATORY TESTING

- (C) Consolidation (ASTM D 2435)
- (CL) Collapse Potential (ASTM D 5333)
- (CP) Compaction Curve (CTM 216)
- (CR) Corrosivity Testing (CTM 643, CTM 422, CTM 417)
- (CU) Consolidated Undrained Triaxial (ASTM D 4767)
- (DS) Direct Shear (ASTM D 3080)
- (EI) Expansion Index (ASTM D 4829)
- (M) Moisture Content (ASTM D 2216)
- (OC) Organic Content-% (ASTM D 2974)
- (P) Permeability (CTM 220)
- (PA) Particle Size Analysis (ASTM D 422)
- (PI) Plasticity Index (AASHTO T 90) Liquid Limit (AASHTO T 89)
- (PL) Point Load Index (ASTM D 5731)
- (PM) Pressure Meter
- (R) R-Value (CTM 301)
- (SE) Sand Equivalent (CTM 217)
- (SG) Specific Gravity (AASHTO T 100)
- (SL) Shrinkage Limit (ASTM D 427)
- (SW) Swell Potential (ASTM D 4546)
- (UC) Unconfined Compression-Soil (ASTM D 2166) Unconfined Compression-Rock (ASTM D 2938)
- (UU) Unconsolidated Undrained Triaxial (ASTM D 2850)
- (UW) Unit Weight (ASTM D 4767)

APPARENT DENSITY OF COHESIONLESS SOILS

Description	SPT N_{60} (Blows / 12 in.)
Very Loose	0 - 5
Loose	5 - 10
Medium Dense	10 - 30
Dense	30 - 50
Very Dense	Greater than 50

MOISTURE

Description	Criteria
Dry	No discernable moisture
Moist	Moisture present, but no free water
Wet	Visible free water

PERCENT OR PROPORTION OF SOILS

Description	Criteria
Trace	Particles are present but estimated to be less than 5%
Few	5% - 10%
Little	15% - 25%
Some	30% - 45%
Mostly	50% - 100%

PARTICLE SIZE

Description		Size (in.)
Boulder		Greater than 12
Cobble		3 - 12
Gravel	Coarse	3/4 - 3
	Fine	1/5 - 3/4
Sand	Coarse	1/16 - 1/5
	Medium	1/64 - 1/16
	Fine	1/300 - 1/64
Silt and Clay		Less than 1/300

ENGINEERING SERVICES

MATERIALS AND GEOTECHNICAL SERVICES

PREPARED BY: W. Tang 09/11

STATE OF CALIFORNIA DEPARTMENT OF TRANSPORTATION

DIVISION OF ENGINEERING SERVICES STRUCTURE DESIGN DESIGN BRANCH 10

BRIDGE NO. 54-1306S

POST MILE 0.62

HIGHGROVE UP (SHOOFLY) VIADUCT

LOG OF TEST BORINGS 6 OF 7

GS LOTB SOIL LEGEND

ORIGINAL SCALE IN INCHES FOR REDUCED PLANS 0 1 2 3

UNIT: 3643
PROJECT NUMBER & PHASE: 08000005061
CONTRACT NO.: 08-0M9401

DISREGARD PRINTS BEARING EARLIER REVISION DATES

REVISION DATES

SHEET 16 OF 17

FILE => 541306szltb16.dgn

USERNAME => s124096 DATE PLOTTED => 18-APR-2012 TIME PLOTTED => 16:34

FED. ROAD DIV. NO.	STATE	PROJ. NO.	FISCAL YEAR	SHEET NO.	TOTAL SHEETS
7	CAL.	BR-0269(8)		114	115

DIST.	COUNTY	ROUTE	SECTION	SHEET NO.	TOTAL SHEETS
VIII	SBd	215	F	10	10

Bridge Engineer — Civil Engineer — Chief Engineer

DATE APPROVED: April 2, 1958

AS BUILT PLANS
Contract No. 59-8V68
Date Completed
Document No. 80000766

BRIDGE DEPARTMENT

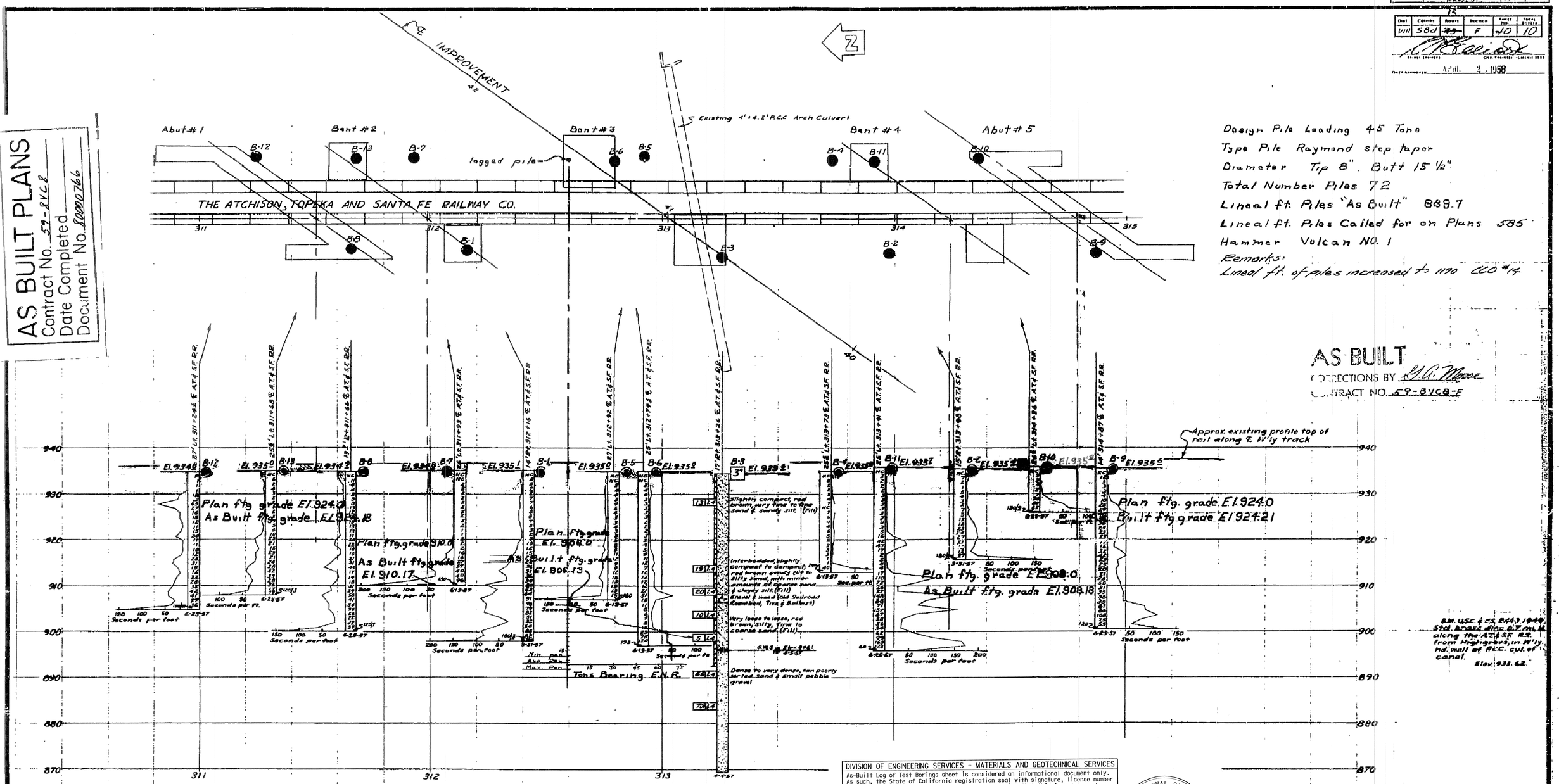

Design Pile Loading 45 Tons
Type Pile Raymond step taper
Diameter Tip 8" Butt 15 1/2"
Total Number Piles 72
Lineal ft. Piles "As Built" 889.7
Lineal ft. Piles Called for on Plans 585
Hammer Vulcan NO. 1
Remarks:
Lineal ft. of piles increased to 1170 CCO #14

AS BUILT
CORRECTIONS BY H.C. Moore
CONTRACT NO. 59-8V68-F

CLASSIFICATION OF MATERIAL BASED ON STANDARD GRADE SIZE LIMITS

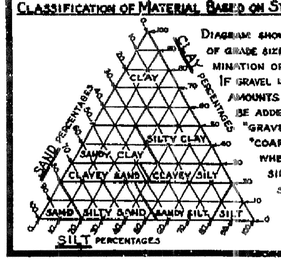

DIAGRAM SHOWING THE BASIS FOR ESTIMATES OF GRADE SIZE DISTRIBUTION USED IN DETERMINATION OF CLASS NAMES. IF GRAVEL IS PRESENT IN APPRECIABLE AMOUNTS THE TERM "GRAVELLY" MAY BE ADDED TO THE CLASS NAME, VIZ. "GRAVELLY SAND." THE TERMS "COARSE", "MEDIUM" AND "FINE" WHEN USED TO DESCRIBE SAND, SILT AND GRAVEL REFER TO STANDARD GRADE SIZE LIMITS.

LEGEND OF EARTH MATERIALS

- GRAVEL
- SAND
- SILT
- CLAY
- SANDY CLAY OR CLAYEY SAND
- SANDY SILT OR SILTY SAND
- SILTY CLAY OR CLAYEY SILT
- PEAT AND/OR ORGANIC MATTER
- FILL MATERIAL
- IGNEOUS ROCK
- SEDIMENTARY ROCK
- METAMORPHIC ROCK

LEGEND OF B

- PLAN OF ANY BORING
- PENETROMETER
- 2½" CONE PENETROMETER
- SAMPLER BORING (DRY)
- ROTARY BORING (WET)
- AUGER BORING (DRY)
- JET BORING
- CORE BORING
- TEST PIT

Top Hole El.
Blows per Foot (Using ___ lb hand hammer with a 12" Free fall)
Description of material
Pulled pipe
Sample taken
Date of boring
1" SOIL TUBE
Groundwater surface
Size of Samp
Blows per (Using a 140 hammer with drop, or as
Unconfined comp
Shear strength

DIVISION OF ENGINEERING SERVICES - MATERIALS AND GEOTECHNICAL SERVICES

As-Built Log of Test Borings sheet is considered an informational document only. As such, the State of California registration seal with signature, license number and registration certificate expiration date confirm that this is a true and accurate copy of the original document. It does not attest to the accuracy or validity of the information contained in the original document. This drawing is available and presented only for the convenience of any bidder, contractor or other interested party.

DIST.	COUNTY	ROUTE	POST MILE-TOTAL PROJECT	Sheet No.	Total Sheets
08	Riv,SBd	91,215	21.5/21.7,43.2/45.2,0.0/5.1	1743	1743

Hector Valencia — 1-18-12
PROFESSIONAL GEOLOGIST — DATE

PROFESSIONAL GEOLOGIST — Hector Valencia — No. 7776 — Exp. 2-28-14 — STATE OF CALIFORNIA

HIGHGROVE UP (SHOOFLY)
LOG OF TEST BORINGS 7 OF 7

UNIT: 3643	CONTRACT No. 08-0M9401	BRIDGE No. 54-1306
PROJ. No. & PHASE: 08000005061		
VERT DATUM: NGVD29 CONVERSION: NAVD88 = NGVD29 + 2.5 ft	Sheet 17	of 17

NOTE: A COPY OF THIS LOG OF TEST BORINGS IS AVAILABLE AT OFFICE OF STRUCTURE MAINTENANCE AND INVESTIGATIONS, SACRAMENTO, CALIFORNIA

TO ACCOMPANY PLANS DATED 4-16-12

NOTES

The contractor's attention is directed to Section 2, Article (c) of the Standard Specifications and to the Special Provisions accompanying this set of plans.

Classification of earth material as shown on this sheet is based upon field inspection and is not to be construed to imply mechanical analysis.

STATE OF CALIFORNIA
DEPARTMENT OF PUBLIC WORKS
DIVISION OF HIGHWAYS

HIGHGROVE UNDERPASS

LOG OF TEST BORINGS

SCALE HORIZ 1"=20' VERT 1" 10' | BRIDGE 54-518 | FILE 54 | DRAWING C4858-10