DIST	COUNTY	ROUTE	POST MILES TOTAL PROJECT	SHEET No.	TOTAL SHEETS
08	Riv,SBd	91,215	21.5/21.7, 43.2/45.2,0.0/5.1	1201	1743

REGISTERED CIVIL ENGINEER 3-29-2012 DATE

4-16-12
PLANS APPROVAL DATE

REGISTERED PROFESSIONAL ENGINEER
RAY DESSELLE
No. 2916
Exp. 11-30-2013
CIVIL
STATE OF CALIFORNIA

The State of California or its officers or agents shall not be responsible for the accuracy or completeness of electronic copies of this plan sheet.

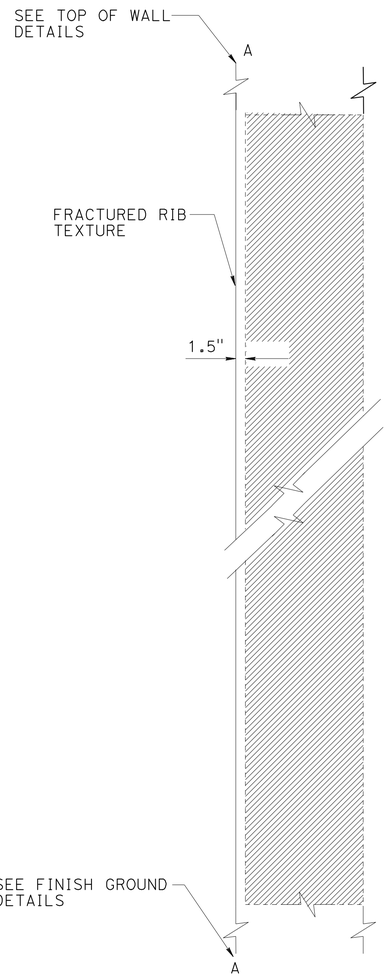

SECTION A-A

NO SCALE

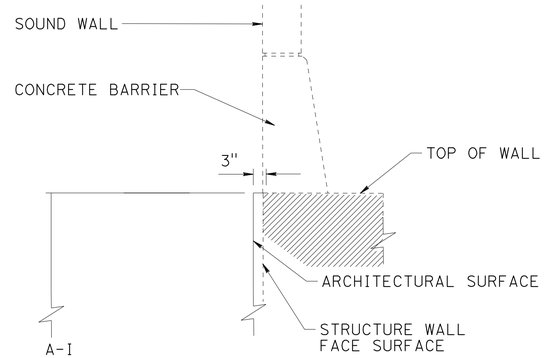

TOP OF WALL DETAIL TYPICAL WITH CONCRETE BARRIER AND SOUND WALL

NO SCALE

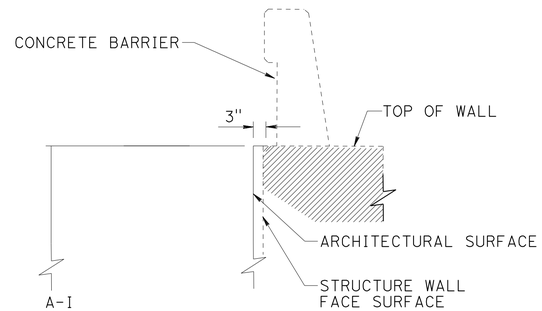

TOP OF WALL DETAIL TYPICAL WITH CONCRETE BARRIER

NO SCALE

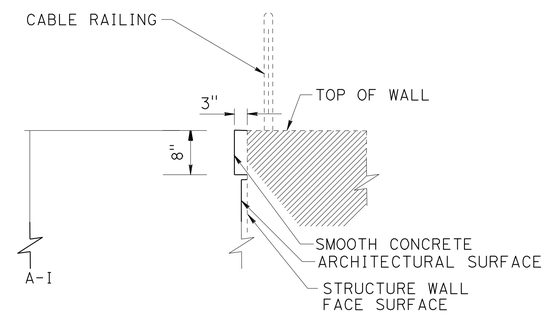

TOP OF WALL DETAIL TYPICAL WITH CABLE RAIL

NO SCALE

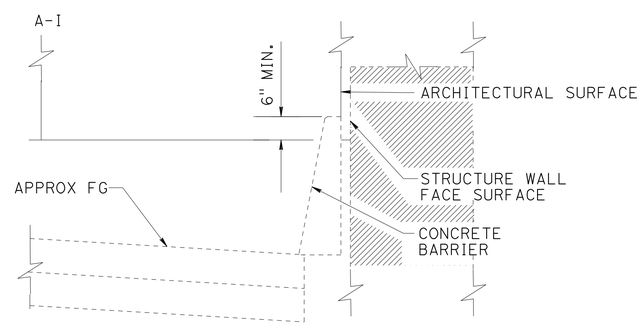

FINISH GROUND DETAIL TYPICAL WITH CONCRETE BARRIER

NO SCALE

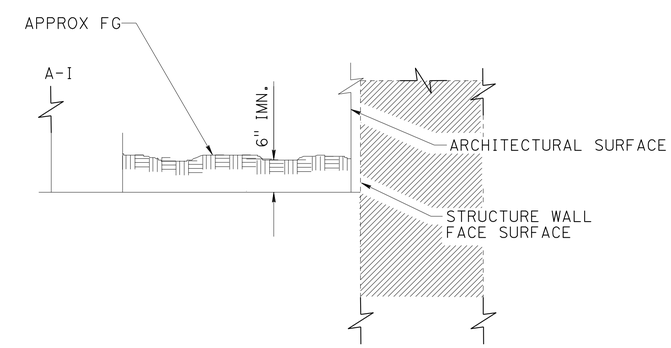

FINISH GROUND DETAIL TYPICAL DETAIL AT FINISH GRADE

NO SCALE

NOTES:

1. For fractured rib detail see, "ARCHITECTURAL TREATMENT LAYOUT NO. 3" sheet.
2. This plan is accurate for Architectural treatment work only.
3. Prepare and Stain Fractured Rib Texture surfaces

DESIGN	BY M. Hall, B. Fleming, B. Strout	CHECKED M. Bishop	
DETAILS	BY M. Bishop	CHECKED M. Hall	
QUANTITIES	BY B. Gunter	CHECKED R. Wang	

STATE OF CALIFORNIA
DEPARTMENT OF TRANSPORTATION

DIVISION OF ENGINEERING SERVICES
STRUCTURE DESIGN
DESIGN BRANCH 19

BRIDGE NO. 54-1294
POST MILE 1.78

NEWPORT AVE OC (REPLACE)

ARCHITECTURAL TREATMENT DETAILS NO. 3

STRUCTURES DESIGN DETAIL SHEET (ENGLISH) (REV. 09-01-10)

ORIGINAL SCALE IN INCHES FOR REDUCED PLANS 0 1 2 3

UNIT: 3621
PROJECT NUMBER & PHASE: 0800000506 1 CONTRACT NO.: 08-0M9401

DISREGARD PRINTS BEARING EARLIER REVISION DATES

REVISION DATES 02-24-12 03-01-12 04-02-12 04-05-12

SHEET 37 OF 46

FILE => 54-1294-u-arch_06.dgn

USERNAME => s128843 DATE PLOTTED => 18-APR-2012 TIME PLOTTED => 16:12

DIST	COUNTY	ROUTE	POST MILES TOTAL PROJECT	SHEET No.	TOTAL SHEETS
08	Riv,SBd	91,215	21.5/21.7, 43.2/45.2,0.0/5.1	1202	1743

12-29-2011
REGISTERED CIVIL ENGINEER DATE

4-16-12
PLANS APPROVAL DATE

REGISTERED PROFESSIONAL ENGINEER
B. R. GUNTER
No. C 66195
Exp. 06-30-12
CIVIL
STATE OF CALIFORNIA

The State of California or its officers or agents shall not be responsible for the accuracy or completeness of electronic copies of this plan sheet.

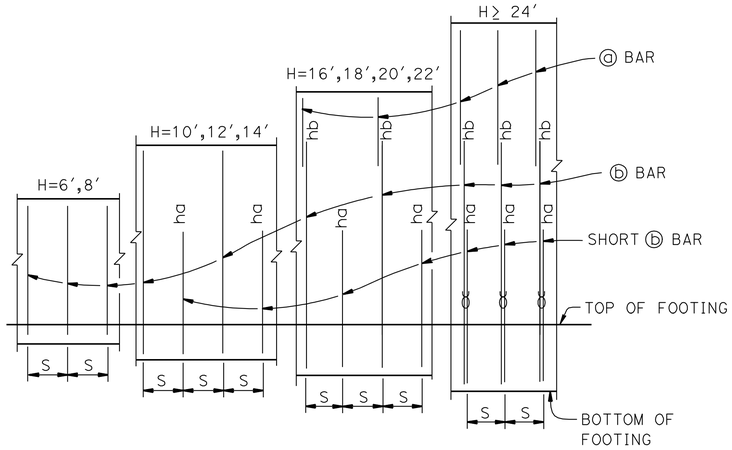

ELEVATION

NO SCALE

NOTES:

"ha" and "hb" above ⓑ bars indicate distance from top of footing to upper end of ⓑ bars, see table.
"S" is ⓑ bar spacing, see table.
ȣ : 2 bar bundle

DESIGN DATA

Design: AASHTO LRFD Bridge Design Specifications, 4th edition with California Amendments

WS: 33 psf on sound wall

LS: Varied surcharge on level ground surface

EQE: Mononabe-Okabe Method
K_h = 0.3
K_v = 0.0

Soil: $\emptyset$ = 34°
γ = 120 pcf

Reinforced Concrete: f′c = 3600 psi
fy = 60,000 psi

Load Combinations and Limit States

Service I	Q=1.00DC+1.00EV+1.00EH+1.00LS+0.30WS
Service II	Q=1.00DC+1.00EV+1.00EH+1.00WS
Strength I	Q=αDC+βEV+1.50EH+1.75LS
Strength III	Q=αDC+βEV+1.50EH+1.40WS
Strength V	Q=αDC+βEV+1.50EH+1.35LS+0.40WS
Extreme I	Q=1.00DC+1.00EV+1.00EH+1.00EQD+1.00EQE

Where:

Q: Force Effects
α: 1.25 or 0.90, Which ever Controls Design
β: 1.35 or 1.00, which ever Controls Design
DC: Dead Load of Structure Components
EV: Vertical Earth Fill Pressure
LS: Live Load Surcharge
EQE: Seismic Earth Pressure
EQD: Soil and Structure Components Inertia. Soil Inertia ignored for stem design
WS: Wind Load on Sound Wall and Barrier

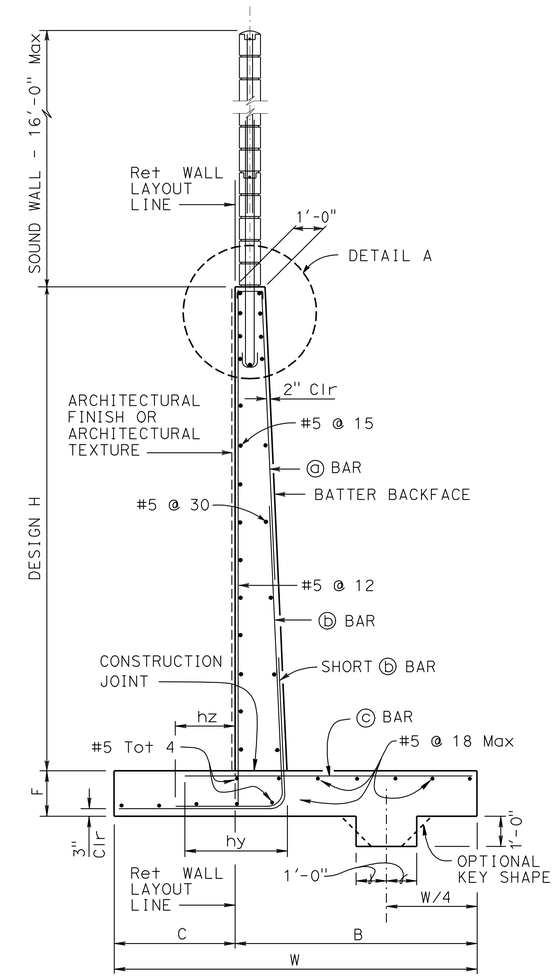

SPREAD FOOTING SECTION

No Scale

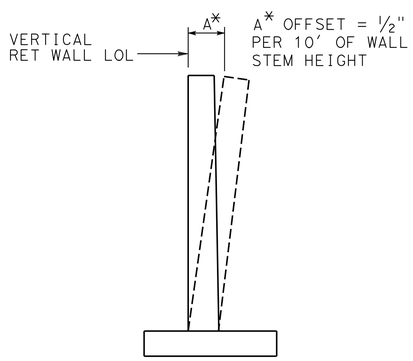

WALL OFFSET

No scale

Values for offsetting forms to be determined by the engineer

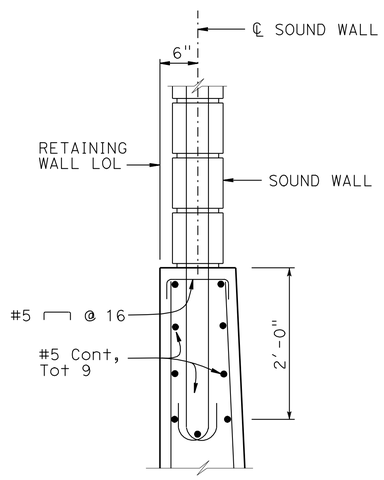

DETAIL A

1" = 1′-0"

NOTES:

1. If Architectural finish of retaining wall required, see "ARCHITECTURAL TREATMENT LAYOUT NO. 1" sheet
2. For details not shown and drainage notes, see B3-5
3. Footing cover, 1′-6" minimum.
4. For sound wall reinforcement, see "SOUND WALL - MASONRY BLOCK ON RETAINING WALL" sheet.
5. For Architectural treatment of masonry sound wall, see "ARCHITECTURAL FEATURES MASONRY BLOCK DETAILS NO.1" sheet

STANDARD DRAWING
FILE NO. xs14-210-1
APPROVAL DATE July 2011

STATE OF CALIFORNIA
DEPARTMENT OF TRANSPORTATION

DIVISION OF ENGINEERING SERVICES

BRIDGE NO. 54-1294
POST MILE 1.78

NEWPORT AVE OC (REPLACE)
RETAINING WALL TYPE 1SW-DETAILS NO. 1

DS OSD 2147A (ENGLISH STANDARD DRAWING "XS" BORDER REV. (02-02-11)

ORIGINAL SCALE IN INCHES FOR REDUCED PLANS 0 1 2 3

UNIT: 3621
PROJECT NUMBER & PHASE: 0800000506 1
CONTRACT NO.: 08-0M9401

DISREGARD PRINTS BEARING EARLIER REVISION DATES
REVISION DATES: 09-21-11 04-05-12 03-01-12
SHEET 38 OF 46

FILE => 54-1294-u-rwswdt01.dgn

USERNAME => s128843 DATE PLOTTED => 18-APR-2012 TIME PLOTTED => 16:12

DIST	COUNTY	ROUTE	POST MILES TOTAL PROJECT	SHEET No.	TOTAL SHEETS
08	Riv,SBd	91,215	21.5/21.7, 43.2/45.2,0.0/5.1	1203	1743

12-29-2011
REGISTERED CIVIL ENGINEER DATE

4-16-12
PLANS APPROVAL DATE

REGISTERED PROFESSIONAL ENGINEER
B. R. GUNTER
No. C 66195
Exp. 06-30-12
CIVIL
STATE OF CALIFORNIA

The State of California or its officers or agents shall not be responsible for the accuracy or completeness of electronic copies of this plan sheet.

TABLE OF REINFORCING STEEL DIMENSIONS AND DATA

DESIGN H	6′	8′	10′	12′	14′	16′	18′	20′	22′	24′	26′	28′	30′	32′
W	6′-9″	7′-3″	8′-0″	8′-9″	10′-0″	11′-6″	12′-9″	14′-0″	15′-9″	18′-0″	19′-9″	21′-9″	23′-3″	25′-3″
C	2′-3″	2′-5″	2′-8″	2′-11″	3′-4″	3′-10″	4′-3″	4′-8″	5′-3″	6′-0″ ◇1	6′-7″	7′-3″	7′-9″	8′-5″
B	4′-6″	4′-10″	5′-4″	5′-10″	6′-8″	7′-8″	8′-6″	9′-4″	10′-6″	12′-0″	13′-2″	14′-6″	15′-6″	16′-10″
F SPREAD FOOTING	1′-3″	1′-3″	1′-3″	1′-3″	1′-6″	1′-9″	1′-9″	2′-3″	2′-6″	2′-6″	2′-9″	3′-0″	3′-6″	3′-9″
BATTER	0	½:12	½:12	½:12	½:12	½:12	⅝:12	⅝:12	⅝:12	¾:12	¾:12	⅞:12	1:12	1:12
ⓐ BARS						#7 @ 15	#7 @ 12	#7 @ 12	#8 @ 12	#6 @ 6	#6 @ 6	#6 @ 6	#8 @ 9	#9 @ 9
ⓑ BARS	#8 @ 12	#8 @ 12	#7 @ 6	#7 @ 6	#7 @ 6	#9 @ 7.5	#9 @ 6	#10 @ 6	#10 @ 6	#8 @ 6 ȣ	#8 @ 6 ȣ	#8 @ 6 ȣ	#10 @ 9 ȣ	#11 @ 9 ȣ
ha			5′-0″	6′-0″	7′-0″	7′-0″	6′-0″	7′-0″	7′-6″	7′-6″	8′-6″	9′-3″	15′-0″	11′-3″
hb						11′-6″	12′-0″	13′-3″	16′-0″	15′-6″	17′-6″	18′-9″	21′-0″	20′-9″
hy	2′-0″	2′-4″	1′-8″	2′-0″	2′-4″	2′-10″	2′-10″	3′-7″	3′-7″	4′-6″	5′-6″	2′-10″	4′-6″	5′-6″
hz		2′-2″ ◇2	2′-5″ ◇2	2′θ8″ ◇2	3′-6″	4′-0″	4′-6″	5′-6″	5′-6″	3′-0″	3′-0″	3′-6″	5′-6″	3′-0″
ⓒ BARS	#6 @ 12	#7 @ 12	#5 @ 6	#6 @ 6	#7 @ 6	#8 @ 7.5	#8 @ 6	#9 @ 6	#9 @ 6	#10 @ 6	#11 @ 6	#8 @ 6 ȣ	#10 @ 9 ȣ	#11 @ 9 ȣ
SER I: B′(ft), q'_0(ksf)	5.9, 1.2	6.0, 1.4	6.5, 1.6	7.0, 1.8	8.1, 1.9	9.7, 2.0	11.0, 2.1	12.1, 2.3	13.8, 2.4	16.6, 2.4	18.5, 2.6	20.7, 2.7	22.1, 2.9	24.3, 3.0
STR Ia: B′(ft), q_0(ksf)	6.3, 1.9	6.3, 2.3	6.7, 2.5	7.0, 2.9	8.1, 3.1	9.5, 3.2	10.8, 3.4	11.8, 3.7	13.4, 4.0	16.2, 4.0	18.0, 4.2	20.2, 4.4	21.5, 5.0	23.7, 5.0
STR, Ib: B′(ft), q_0(ksf)	4.3, 1.6	4.3, 2.0	4.3, 2.4	4.3, 2.8	4.3, 2.9	4.3, 2.9	4.3, 3.0	4.3, 3.4	4.3, 3.5	4.3, 3.4	4.3, 3.5	4.3, 3.6	4.3, 3.9	4.3, 4.1
STR, IIIa: B′(ft), q_0(ksf)	4.3, 2.1	4.3, 2.4	4.3, 2.5	4.3, 2.8	4.3, 2.9	4.3, 3.0	4.3, 3.2	4.3, 3.7	4.3, 3.7	4.3, 3.8	4.3, 4.0	4.3, 4.2	4.3, 4.6	4.3, 4.9
STR, IIIb: B′(ft), q_0(ksf)	3.2, 2.1	3.2, 2.3	3.2, 2.4	3.2, 2.6	3.2, 2.7	3.2, 2.7	3.2, 2.8	3.2, 3.1	3.2, 3.0	3.2, 3.2	3.2, 3.8	3.2, 3.4	3.2, 3.7	3.2, 3.9
STR, Va: B′(ft), q_0(ksf)	5.9, 2.0	5.9, 2.3	5.9, 2.6	5.9, 2.9	5.9, 3.1	5.9, 3.2	5.9, 3.4	5.9, 3.9	5.9, 3..9	5.9, 4.0	5.9, 4.2	5.9, 4.5	5.9, 4.9	5.9, 5.1
STR, Vb: B′(ft), q_0(ksf)	3.8, 1.7	3.8, 2.1	3.8, 2.5	3.8, 2.8	3.8, 2.9	3.8, 2.9	3.8, 3.0	3.8, 3.3	3.8, 3.4	3.8, 3.3	3.8, 3.5	3.8, 3.6	3.8, 3.9	3.8, 4.0
Ext I: B′(ft), q_0(ksf)	2.5, 2.8	2.5, 4.3	2.5, 6.4	2.5, 10.9	2.5, 13.3	2.5, 12.4	2.5, 13.2	2.5, 17.6	2.5, 15.0	2.5, 10.2	2.5, 10.0	2.5, 9.6	2.5, 10.8	2.5, 10.5

LEGEND:

SER: service limit state
STR: strength limit state
EXT: extreme event limit state
B′: effective footing width (ft)

q'_0: net bearing stress (ksf)

q_0: gross uniform bearing stress (ksf)

ȣ: 2 bar bundle

SPECIAL DETAILS

REVISED STANDARD DRAWING

FILE NO. **xs14-210-2**

APPROVAL DATE REVISED

◇1 DIMENSION MODIFIED
◇2 DIMENSION ADDED

STATE OF **CALIFORNIA** DEPARTMENT OF TRANSPORTATION

DIVISION OF ENGINEERING SERVICES

BRIDGE NO. 54-1294
POST MILE 1.78

NEWPORT AVE OC (REPLACE)

RETAINING WALL TYPE 1SW-DETAILS NO. 2

DS OSD 2147A (ENGLISH STANDARD DRAWING "XS" BORDER REV. (02-02-11)

ORIGINAL SCALE IN INCHES FOR REDUCED PLANS 0 1 2 3

UNIT:3621
PROJECT NUMBER & PHASE:0800000506 1 CONTRACT NO.:08-0M9401

DISREGARD PRINTS BEARING EARLIER REVISION DATES

REVISION DATES: 09-21-11 03-01-12 04-05-12

SHEET 39 OF 46

FILE => 54-1294-u-rwswdt02.dgn

USERNAME => s128843 DATE PLOTTED => 18-APR-2012 TIME PLOTTED => 16:12

DIST	COUNTY	ROUTE	POST MILES TOTAL PROJECT	SHEET No.	TOTAL SHEETS
08	Riv,SBd	91,215	21.5/21.7, 43.2/45.2,0.0/5.1	1204	1743

12-29-2011
REGISTERED CIVIL ENGINEER DATE

4-16-12
PLANS APPROVAL DATE

REGISTERED PROFESSIONAL ENGINEER B. R. GUNTER No. C 66195 Exp. 06-30-12 CIVIL STATE OF CALIFORNIA

The State of California or its officers or agents shall not be responsible for the accuracy or completeness of electronic copies of this plan sheet.

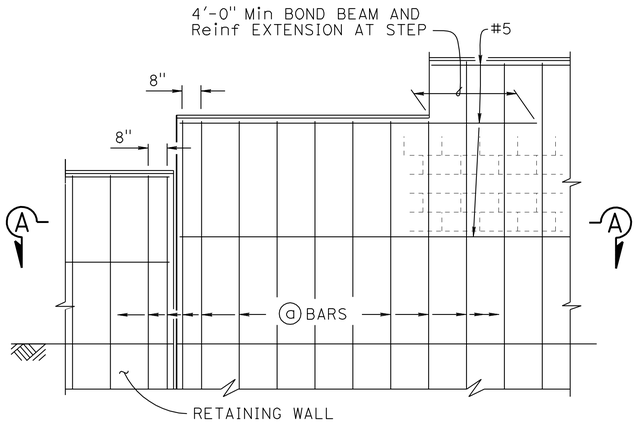

H=6'-0" THRU H=10'-0"

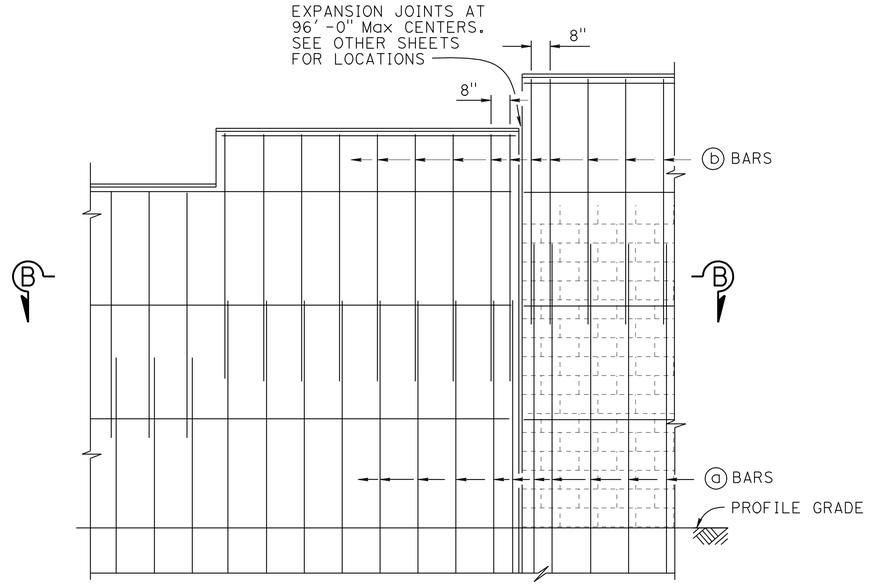

H=12'-0" THRU H=16'-0"

PART ELEVATION

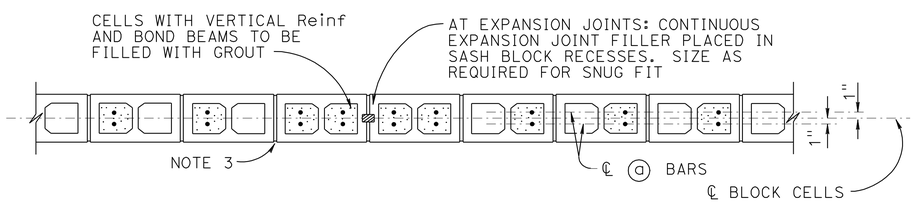

SECTION A-A

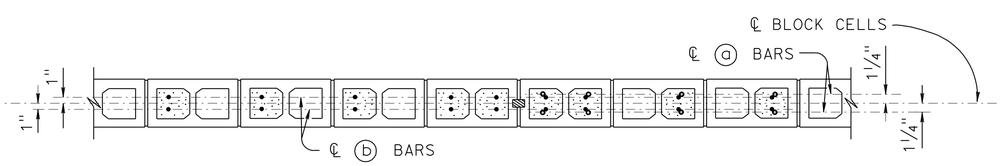

SECTION B-B

SOUND WALL REINFORCEMENT TABLE

MAXIMUM "H"	ⓐ BARS @ 1'-4" Max	ⓑ BARS @ 1'-4" Max	"Y"	f'm (psi)	COMPRESSIVE STRENGTH OF CMU (psi)	MAXIMUM "H"
6'-0"	#4	———	———	1500	1900	6'-0"
8'-0"	#4	———	———	1500	1900	8'-0"
10'-0"	#4	———	———	1500	1900	10'-0"
12'-0"	#5	#4	6'-0"	2000	2800	12'-0"
14'-0"	#6	#4	8'-0"	2500	3750	14'-0"
16'-0"	#6	#4	10'-0"	2500	3750	16'-0"

DESIGN NOTES

DESIGN
Uniform Building Code, 1997 Edition and the Bridge Design Specifications

DESIGN WIND LOAD
33 psf

DESIGN SEISMIC LOAD
0.57 Dead load

REINFORCED CONCRETE
f'c = 3600 ksi
fy = 60 ksi

CONCRETE MASONRY

REGULAR STRENGTH	HIGH STRENGTH	
f'm = 1500 psi	f'm = 2000 psi	f'm = 2500 psi
fb = 495 psi	fb = 660 psi	fb = 830 psi
fs = 24,000 psi	fs = 24,000 psi	fs = 24,000 psi
n = 25.8	n = 19.3	n = 15.5

NOTES:

1. For type of block and joint finish, see other sheets
2. When blocks are laid in stacked bond, ladder type, galvanized joint reinforcement shall be provided. A minimum of 2 - 9 gauge wires continuous at 4'-0" maximum to be used. Locate reinforcement in joints that are at the approximate midpoint between bond beams
3. Horizontal joints shall be tooled concave or may be weathered
   Vertical joints shall be tooled concave or may be raked
4. For intermediate wall heights that are between the "H's" given, use the tabular information for the next higher "H"
5. See STANDARD PLANS B15-9 for other details

NO SCALE

STANDARD DRAWING
FILE NO. xs15-120-1
APPROVAL DATE July 2011

STATE OF CALIFORNIA
DEPARTMENT OF TRANSPORTATION

DIVISION OF ENGINEERING SERVICES

BRIDGE NO. 54-1294
POST MILE 1.78

NEWPORT AVE OC (REPLACE)
MASONRY BLOCK SOUND WALL ON RETAINING WALL
DETAILS NO. 1

DS OSD 2147A (ENGLISH STANDARD DRAWING "XS" BORDER REV. (02-02-11)

ORIGINAL SCALE IN INCHES FOR REDUCED PLANS 0 1 2 3

UNIT: 3621
PROJECT NUMBER & PHASE: 0800000506 1 CONTRACT NO.: 08-0M9401

DISREGARD PRINTS BEARING EARLIER REVISION DATES

REVISION DATES 08-21-11 04-05-12 03-01-12 SHEET 40 OF 46

FILE => 54-1294-u-swmb01.dgn

USERNAME => s128843 DATE PLOTTED => 18-APR-2012 TIME PLOTTED => 16:13

DIST	COUNTY	ROUTE	POST MILES TOTAL PROJECT	SHEET No.	TOTAL SHEETS
08	Riv,SBd	91,215	21.5/21.7, 43.2/45.2,0.0/5.1	1205	1743

12-29-2011
REGISTERED CIVIL ENGINEER DATE

4-16-12
PLANS APPROVAL DATE

REGISTERED PROFESSIONAL ENGINEER
B. R. GUNTER
No. C 66195
Exp. 06-30-12
CIVIL
STATE OF CALIFORNIA

The State of California or its officers or agents shall not be responsible for the accuracy or completeness of electronic copies of this plan sheet.

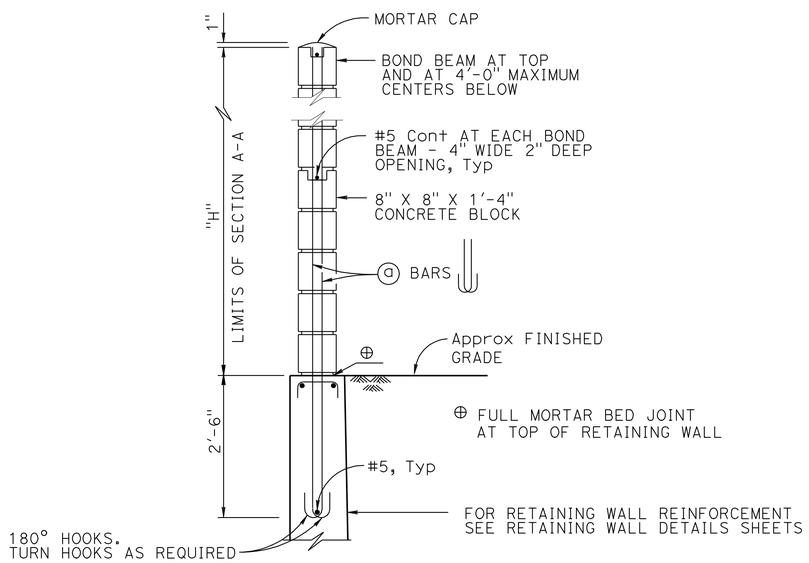

NOTE:
For details not shown, see H=12'-0" thru H=16'-0"

H=6'-0" THRU H=10'-0"

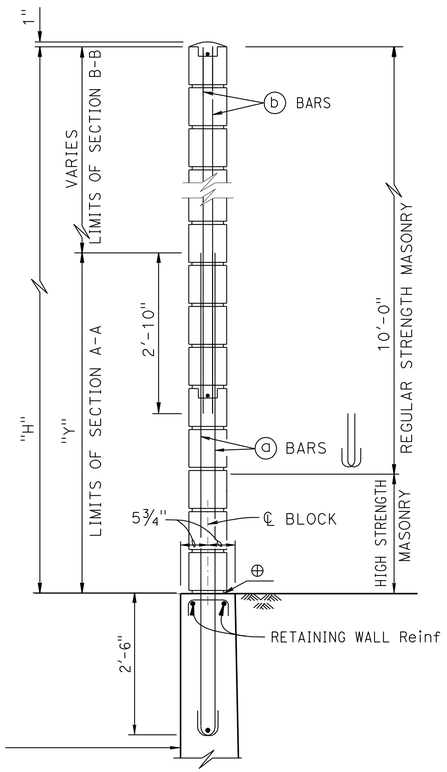

NOTE:
For details not shown, see H=6'-0" thru H=10'-0"

H=12'-0" THRU H=16'-0"

TYPICAL SECTION

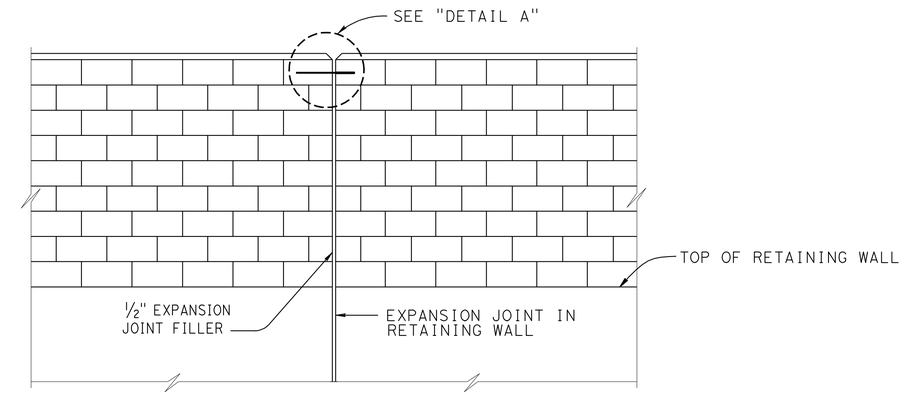

ALIGNMENT KEY DETAIL

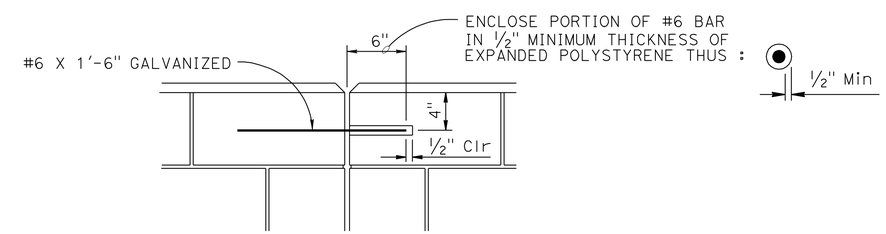

DETAIL A

NO SCALE

STANDARD DRAWING		STATE OF CALIFORNIA DEPARTMENT OF TRANSPORTATION	DIVISION OF ENGINEERING SERVICES	BRIDGE NO. 54-1294	NEWPORT AVE OC (REPLACE)
FILE NO. xs15-120-2	APPROVAL DATE July 2011			POST MILE 1.78	MASONRY BLOCK SOUND WALL ON RETAINING WALL
					DETAILS NO. 2

DS OSD 2147A (ENGLISH STANDARD DRAWING "XS" BORDER REV. (02-02-11))

ORIGINAL SCALE IN INCHES FOR REDUCED PLANS 0 1 2 3

UNIT: 3621
PROJECT NUMBER & PHASE: 0800000506 1 CONTRACT NO.: 08-0M9401

DISREGARD PRINTS BEARING EARLIER REVISION DATES

REVISION DATES: 09-21-11 04-05-12 03-01-12

SHEET 41 OF 46

FILE => 54-1294-u-swmb02.dgn

USERNAME => s128843 DATE PLOTTED => 18-APR-2012 TIME PLOTTED => 16:13

DIST	COUNTY	ROUTE	POST MILES TOTAL PROJECT	SHEET No.	TOTAL SHEETS
08	Riv,SBd	91,215	21.5/21.7, 43.2/45.2,0.0/5.1	1206	1743

REGISTERED CIVIL ENGINEER 3-29-2012 DATE

4-16-12
PLANS APPROVAL DATE

REGISTERED PROFESSIONAL ENGINEER
RAY DESSELLE
No. 2916
Exp. 11-30-2013
CIVIL
STATE OF CALIFORNIA

The State of California or its officers or agents shall not be responsible for the accuracy or completeness of electronic copies of this plan sheet.

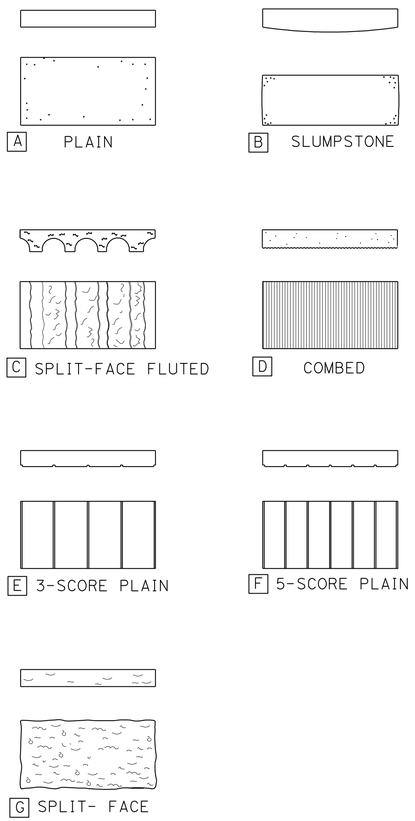

MASONRY BLOCK FACES
NO SCALE

NOTE: COLOR SHALL BE RED BROWN, FEDERAL STANDARD COLOR CHIP #30227

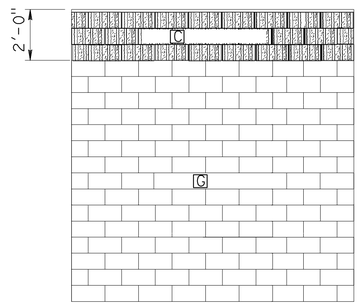

TRAFFIC SIDE AND OTHER SIDE SIMILAR

TYPICAL WALL SEGMENT
NO SCALE

* 8 x 8 x 16 BLOCK SPLIT-FACE

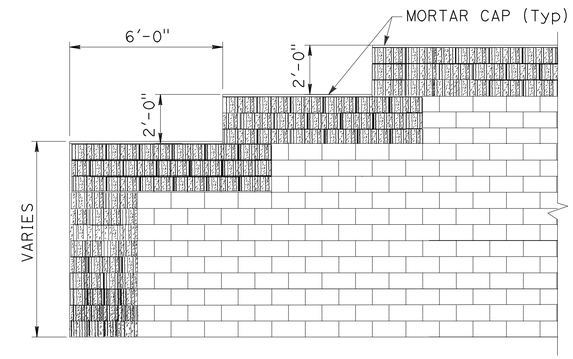

TRAFFIC SIDE AND OTHER SIDE SIMILAR

END TYPE
NO SCALE

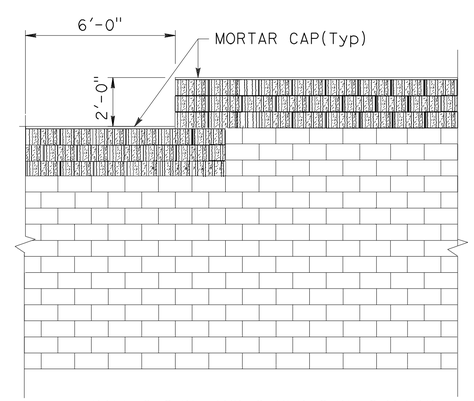

TRAFFIC SIDE AND OTHER SIDE SIMILAR

ELEVATION TRANSITION TYPE
NO SCALE

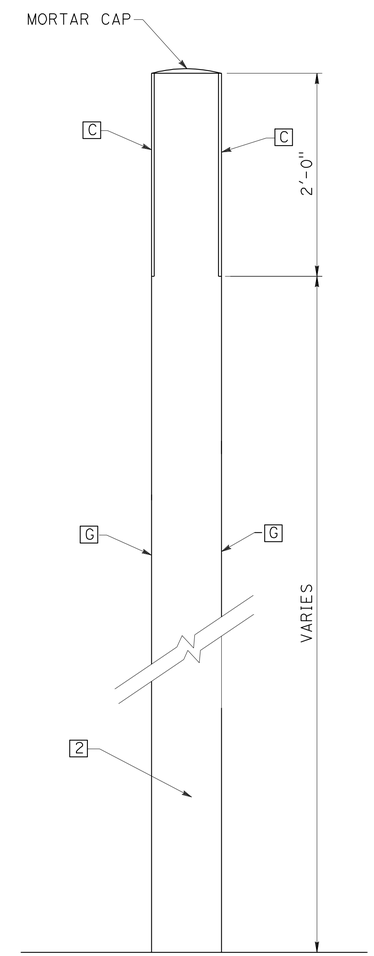

SECTION
NO SCALE

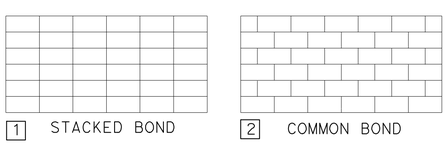

NOTE: TOOLED JOINTS ONLY

BOND TYPE
NO SCALE

DESIGN	BY M. Hall, B. Fleming, B. Strout	CHECKED M. Bishop	
DETAILS	BY M. Bishop	CHECKED M. Hall	
QUANTITIES	BY B. Gunter	CHECKED R. Wang	

STATE OF CALIFORNIA
DEPARTMENT OF TRANSPORTATION

DIVISION OF ENGINEERING SERVICES
STRUCTURE DESIGN
DESIGN BRANCH 19

BRIDGE NO. 54-1294
POST MILE 1.78

NEWPORT AVE OC (REPLACE)
ARCHITECTURAL FEATURES MASONRY BLOCK-DETAILS NO. 1

STRUCTURES DESIGN DETAIL SHEET (ENGLISH) (REV. 09-01-10)

ORIGINAL SCALE IN INCHES FOR REDUCED PLANS 0 1 2 3

UNIT: 3621
PROJECT NUMBER & PHASE: 0800000506 1 CONTRACT NO.: 08-0M9401

DISREGARD PRINTS BEARING EARLIER REVISION DATES

REVISION DATES: 02-24-12 03-01-12 04-02-12 04-05-12

SHEET 42 OF 46

FILE => 54-1294-v-archdt01.dgn

USERNAME => s128843 DATE PLOTTED => 18-APR-2012 TIME PLOTTED => 16:13

DIST	COUNTY	ROUTE	POST MILES TOTAL PROJECT	SHEET No.	TOTAL SHEETS
08	Riv,SBd	91,215	21.5/21.7, 43.2/45.2,0.0/5.1	1207	1743

REGISTERED CIVIL ENGINEER 10-18-11 DATE

4-16-12
PLANS APPROVAL DATE

REGISTERED PROFESSIONAL ENGINEER Fernando DeHaro No. C65281 Exp. 9-30-13 CIVIL STATE OF CALIFORNIA

The State of California or its officers or agents shall not be responsible for the accuracy or completeness of electronic copies of this plan sheet.

This LOTB sheet was prepared in accordance with the Caltrans Soil & Rock Logging, Classification, & Presentation Manual (2010 Edition).

BENCH MARK

BM 3070
2" Brass Marker in
Sidewalk on South Side
Newport Ave. Bridge.
N 1837200.23
E 6767861.11
Elev 1029.10'

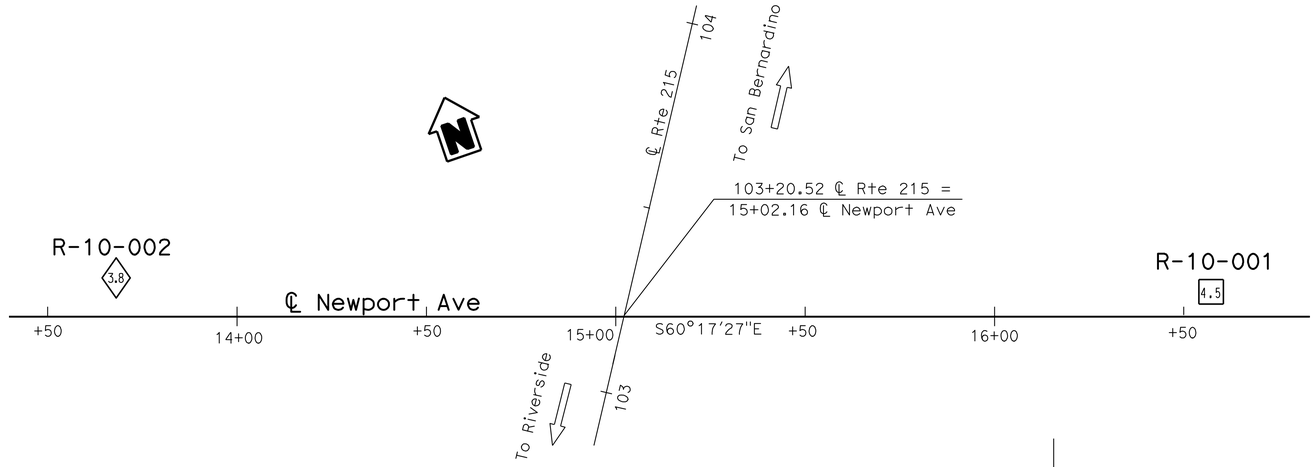

PLAN

1" = 20'

Note: No ground water encountered during field investigation.

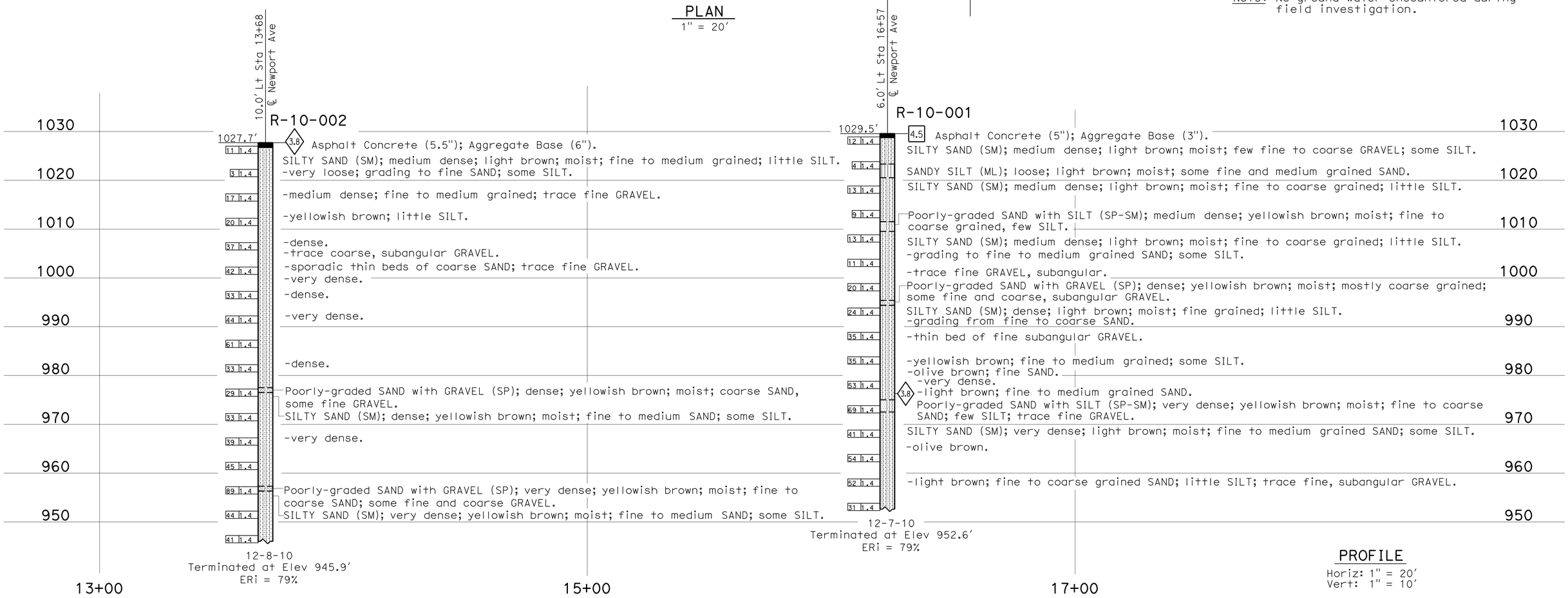

PROFILE

Horiz: 1" = 20'
Vert: 1" = 10'

ENGINEERING SERVICES	MATERIALS AND GEOTECHNICAL SERVICES	STATE OF CALIFORNIA DEPARTMENT OF TRANSPORTATION	DIVISION OF ENGINEERING SERVICES STRUCTURE DESIGN DESIGN BRANCH X	BRIDGE NO. 54-1294 POST MILE 1.8	NEWPORT AVE OC (REPLACE) LOG OF TEST BORINGS 1 OF 4
FUNCTIONAL SUPERVISOR NAME: M. DeSalvatore	DRAWN BY: W. Tang 07/11 CHECKED BY: E. Neupert	FIELD INVESTIGATION BY: F. De Haro			

OGS CIVIL LOG OF TEST BORINGS SHEET

ORIGINAL SCALE IN INCHES FOR REDUCED PLANS 0 1 2 3

UNIT: 3643
PROJECT NUMBER & PHASE: 08000201091 CONTRACT NO.: 08-0P5101

DISREGARD PRINTS BEARING EARLIER REVISION DATES

REVISION DATES 08-22-11 09-24-11 09-23-11 03-01-12 SHEET 43 OF 46

FILE => 54-1294-z-lltb01.dgn

USERNAME => s128843 DATE PLOTTED => 18-APR-2012 TIME PLOTTED => 16:13

DIST	COUNTY	ROUTE	POST MILES TOTAL PROJECT	SHEET No.	TOTAL SHEETS
08	Riv,SBd	91,215	21.5/21.7, 43.2/45.2,0.0/5.1	1208	1743

REGISTERED CIVIL ENGINEER 10-18-11 DATE

4-16-12
PLANS APPROVAL DATE

REGISTERED PROFESSIONAL ENGINEER Fernando DeHaro No. C65281 Exp. 9-30-13 CIVIL STATE OF CALIFORNIA

The State of California or its officers or agents shall not be responsible for the accuracy or completeness of electronic copies of this plan sheet.

REFERENCE: CALTRANS SOIL & ROCK LOGGING, CLASSIFICATION, AND PRESENTATION MANUAL (2010)

CEMENTATION

Description	Criteria
Weak	Crumbles or breaks with handling or little finger pressure.
Moderate	Crumbles or breaks with considerable finger pressure.
Strong	Will not crumble or break with finger pressure.

BOREHOLE IDENTIFICATION

Symbol	Hole Type	Description
Size	A	Auger Boring (hollow or solid stem bucket)
Size	R RW RC P	Rotary drilled boring (conventional) Rotary drilled with self-casing wire-line Rotary core with continuously-sampled, self-casing wire-line Rotary percussion boring (air)
Size	R RC	Rotary drilled diamond core Rotary drilled rock core
Size	HD HA	Hand driven (1-inch soil tube) Hand Auger
●	D	Dynamic Cone Penetration Boring
▲	CPT	Cone Penetration Test (ASTM D 5778)
⬚	O	Other (note on LOTB)

Note: Size in inches.

CONSISTENCY OF COHESIVE SOILS

Description	Shear Strength (tsf)	Pocket Penetrometer Measurement, PP, (tsf)	Torvane Measurement, TV, (tsf)	Vane Shear Measurement, VS, (tsf)
Very Soft	Less than 0.12	Less than 0.25	Less than 0.12	Less than 0.12
Soft	0.12 - 0.25	0.25 - 0.5	0.12 - 0.25	0.12 - 0.25
Medium Stiff	0.25 - 0.5	0.5 - 1	0.25 - 0.5	0.25 - 0.5
Stiff	0.5 - 1	1 - 2	0.5 - 1	0.5 - 1
Very Stiff	1 - 2	2 - 4	1 - 2	1 - 2
Hard	Greater than 2	Greater than 4	Greater than 2	Greater than 2

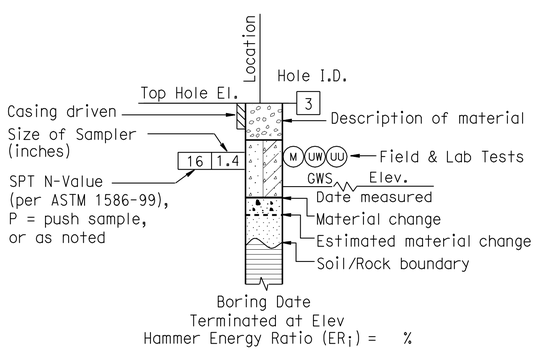

ROTARY BORING

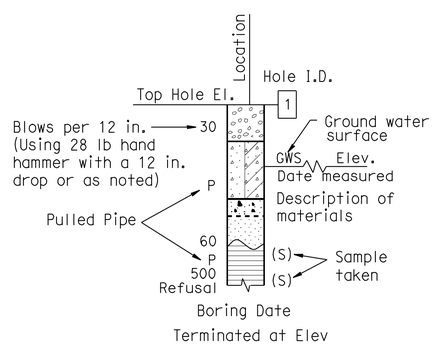

HAND BORING

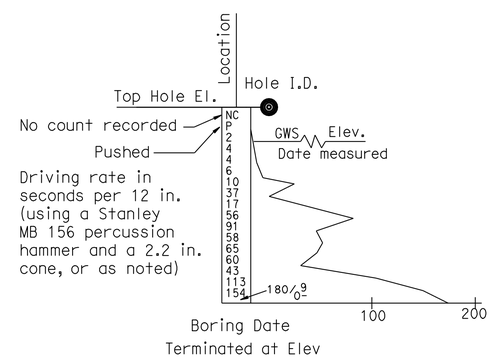

DYNAMIC CONE PENETRATION BORING

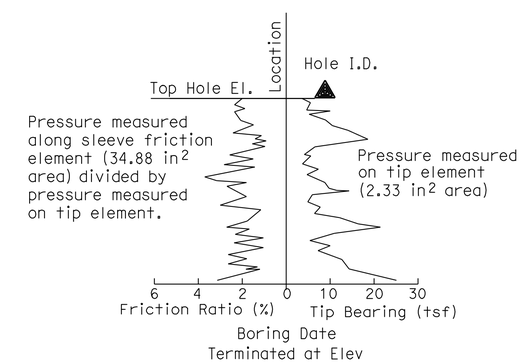

CONE PENETRATION TEST (CPT) BORING

ENGINEERING SERVICES	MATERIALS AND GEOTECHNICAL SERVICES	STATE OF CALIFORNIA DEPARTMENT OF TRANSPORTATION	DIVISION OF ENGINEERING SERVICES STRUCTURE DESIGN DESIGN BRANCH X	BRIDGE NO. 54-1294 POST MILE 1.8	NEWPORT AVE OC (REPLACE) LOG OF TEST BORINGS 2 OF 4
	PREPARED BY: W. Tang 07/11				

GS LOTB SOIL LEGEND

ORIGINAL SCALE IN INCHES FOR REDUCED PLANS 0 1 2 3

UNIT: 3643
PROJECT NUMBER & PHASE: 08000201091 CONTRACT NO.: 08-0P5101

DISREGARD PRINTS BEARING EARLIER REVISION DATES

REVISION DATES

SHEET 44 OF 46

FILE => 54-1294-z-ltb02.dgn

USERNAME => s128843 DATE PLOTTED => 18-APR-2012 TIME PLOTTED => 16:13

REFERENCE: CALTRANS SOIL & ROCK LOGGING, CLASSIFICATION, AND PRESENTATION MANUAL (2010)

DIST	COUNTY	ROUTE	POST MILES TOTAL PROJECT	SHEET No.	TOTAL SHEETS
08	Riv,SBd	91,215	21.5/21.7, 43.2/45.2,0.0/5.1	1209	1743

REGISTERED CIVIL ENGINEER 10-18-11 DATE

4-16-12
PLANS APPROVAL DATE

REGISTERED PROFESSIONAL ENGINEER Fernando DeHaro No. C65281 Exp. 9-30-13 CIVIL STATE OF CALIFORNIA

The State of California or its officers or agents shall not be responsible for the accuracy or completeness of electronic copies of this plan sheet.

GROUP SYMBOLS AND NAMES

Graphic/Symbol	Group Names	Graphic/Symbol	Group Names
GW	Well-graded GRAVEL Well-graded GRAVEL with SAND	CL	Lean CLAY Lean CLAY with SAND Lean CLAY with GRAVEL SANDY lean CLAY SANDY lean CLAY with GRAVEL GRAVELLY lean CLAY GRAVELLY lean CLAY with SAND
GP	Poorly-graded GRAVEL Poorly-graded GRAVEL with SAND		
GW-GM	Well-graded GRAVEL with SILT Well-graded GRAVEL with SILT and SAND	CL-ML	SILTY CLAY SILTY CLAY with SAND SILTY CLAY with GRAVEL SANDY SILTY CLAY SANDY SILTY CLAY with GRAVEL GRAVELLY SILTY CLAY GRAVELLY SILTY CLAY with SAND
GW-GC	Well-graded GRAVEL with CLAY (or SILTY CLAY) Well-graded GRAVEL with CLAY and SAND (or SILTY CLAY and SAND)		
GP-GM	Poorly-graded GRAVEL with SILT Poorly-graded GRAVEL with SILT and SAND	ML	SILT SILT with SAND SILT with GRAVEL SANDY SILT SANDY SILT with GRAVEL GRAVELLY SILT GRAVELLY SILT with SAND
GP-GC	Poorly-graded GRAVEL with CLAY (or SILTY CLAY) Poorly-graded GRAVEL with CLAY and SAND (or SILTY CLAY and SAND)		
GM	SILTY GRAVEL SILTY GRAVEL with SAND	OL	ORGANIC lean CLAY ORGANIC lean CLAY with SAND ORGANIC lean CLAY with GRAVEL SANDY ORGANIC lean CLAY SANDY ORGANIC lean CLAY with GRAVEL GRAVELLY ORGANIC lean CLAY GRAVELLY ORGANIC lean CLAY with SAND
GC	CLAYEY GRAVEL CLAYEY GRAVEL with SAND		
GC-GM	SILTY, CLAYEY GRAVEL SILTY, CLAYEY GRAVEL with SAND	OL	ORGANIC SILT ORGANIC SILT with SAND ORGANIC SILT with GRAVEL SANDY ORGANIC SILT SANDY ORGANIC SILT with GRAVEL GRAVELLY ORGANIC SILT GRAVELLY ORGANIC SILT with SAND
SW	Well-graded SAND Well-graded SAND with GRAVEL		
SP	Poorly-graded SAND Poorly-graded SAND with GRAVEL	CH	Fat CLAY Fat CLAY with SAND Fat CLAY with GRAVEL SANDY fat CLAY SANDY fat CLAY with GRAVEL GRAVELLY fat CLAY GRAVELLY fat CLAY with SAND
SW-SM	Well-graded SAND with SILT Well-graded SAND with SILT and GRAVEL		
SW-SC	Well-graded SAND with CLAY (or SILTY CLAY) Well-graded SAND with CLAY and GRAVEL (or SILTY CLAY and GRAVEL)	MH	Elastic SILT Elastic SILT with SAND Elastic SILT with GRAVEL SANDY elastic SILT SANDY elastic SILT with GRAVEL GRAVELLY elastic SILT GRAVELLY elastic SILT with SAND
SP-SM	Poorly-graded SAND with SILT Poorly-graded SAND with SILT and GRAVEL		
SP-SC	Poorly-graded SAND with CLAY (or SILTY CLAY) Poorly-graded SAND with CLAY and GRAVEL (or SILTY CLAY and GRAVEL)	OH	ORGANIC fat CLAY ORGANIC fat CLAY with SAND ORGANIC fat CLAY with GRAVEL SANDY ORGANIC fat CLAY SANDY ORGANIC fat CLAY with GRAVEL GRAVELLY ORGANIC fat CLAY GRAVELLY ORGANIC fat CLAY with SAND
SM	SILTY SAND SILTY SAND with GRAVEL		
SC	CLAYEY SAND CLAYEY SAND with GRAVEL	OH	ORGANIC elastic SILT ORGANIC elastic SILT with SAND ORGANIC elastic SILT with GRAVEL SANDY ORGANIC elastic SILT SANDY ORGANIC elastic SILT with GRAVEL GRAVELLY ORGANIC elastic SILT GRAVELLY ORGANIC elastic SILT with SAND
SC-SM	SILTY, CLAYEY SAND SILTY, CLAYEY SAND with GRAVEL		
PT	PEAT	OL/OH	ORGANIC SOIL ORGANIC SOIL with SAND ORGANIC SOIL with GRAVEL SANDY ORGANIC SOIL SANDY ORGANIC SOIL with GRAVEL GRAVELLY ORGANIC SOIL GRAVELLY ORGANIC SOIL with SAND
	COBBLES COBBLES and BOULDERS BOULDERS		

FIELD AND LABORATORY TESTING

- (C) Consolidation (ASTM D 2435)
- (CL) Collapse Potential (ASTM D 5333)
- (CP) Compaction Curve (CTM 216)
- (CR) Corrosivity Testing (CTM 643, CTM 422, CTM 417)
- (CU) Consolidated Undrained Triaxial (ASTM D 4767)
- (DS) Direct Shear (ASTM D 3080)
- (EI) Expansion Index (ASTM D 4829)
- (M) Moisture Content (ASTM D 2216)
- (OC) Organic Content-% (ASTM D 2974)
- (P) Permeability (CTM 220)
- (PA) Particle Size Analysis (ASTM D 422)
- (PI) Plasticity Index (AASHTO T 90) Liquid Limit (AASHTO T 89)
- (PL) Point Load Index (ASTM D 5731)
- (PM) Pressure Meter
- (R) R-Value (CTM 301)
- (SE) Sand Equivalent (CTM 217)
- (SG) Specific Gravity (AASHTO T 100)
- (SL) Shrinkage Limit (ASTM D 427)
- (SW) Swell Potential (ASTM D 4546)
- (UC) Unconfined Compression-Soil (ASTM D 2166) Unconfined Compression-Rock (ASTM D 2938)
- (UU) Unconsolidated Undrained Triaxial (ASTM D 2850)
- (UW) Unit Weight (ASTM D 4767)

APPARENT DENSITY OF COHESIONLESS SOILS

Description	SPT N_{60} (Blows / 12 in.)
Very Loose	0 - 5
Loose	5 - 10
Medium Dense	10 - 30
Dense	30 - 50
Very Dense	Greater than 50

MOISTURE

Description	Criteria
Dry	No discernable moisture
Moist	Moisture present, but no free water
Wet	Visible free water

PERCENT OR PROPORTION OF SOILS

Description	Criteria
Trace	Particles are present but estimated to be less than 5%
Few	5% - 10%
Little	15% - 25%
Some	30% - 45%
Mostly	50% - 100%

PARTICLE SIZE

Description		Size (in.)
Boulder		Greater than 12
Cobble		3 - 12
Gravel	Coarse	3/4 - 3
	Fine	1/5 - 3/4
Sand	Coarse	1/16 - 1/5
	Medium	1/64 - 1/16
	Fine	1/300 - 1/64
Silt and Clay		Less than 1/300

ENGINEERING SERVICES

MATERIALS AND GEOTECHNICAL SERVICES

PREPARED BY: W. Tang 07/11

STATE OF CALIFORNIA DEPARTMENT OF TRANSPORTATION

DIVISION OF ENGINEERING SERVICES STRUCTURE DESIGN DESIGN BRANCH X

BRIDGE NO. 54-1294

POST MILE 1.8

NEWPORT AVE OC (REPLACE)

LOG OF TEST BORINGS 3 OF 4

GS LOTB SOIL LEGEND

ORIGINAL SCALE IN INCHES FOR REDUCED PLANS 0 1 2 3

UNIT: 3643
PROJECT NUMBER & PHASE: 08000201091
CONTRACT NO.: 08-0P5101

DISREGARD PRINTS BEARING EARLIER REVISION DATES

REVISION DATES

SHEET 45 OF 46

FILE => 54-1294-z-ltb03.dgn

USERNAME => s128843 DATE PLOTTED => 18-APR-2012 TIME PLOTTED => 16:14

FED ROAD DIV NO	STATE	PROJ NO	FISCAL YEAR	SHEET NO	TOTAL SHEETS
7	CAL.	DU-0269(6)		135	175

UNIT	COUNTY	ROUTE	SECTION	SHEET NO	TOTAL SHEETS
VIII	SBD	215	F	5	5

DATE APPROVED APRIL 2 1958

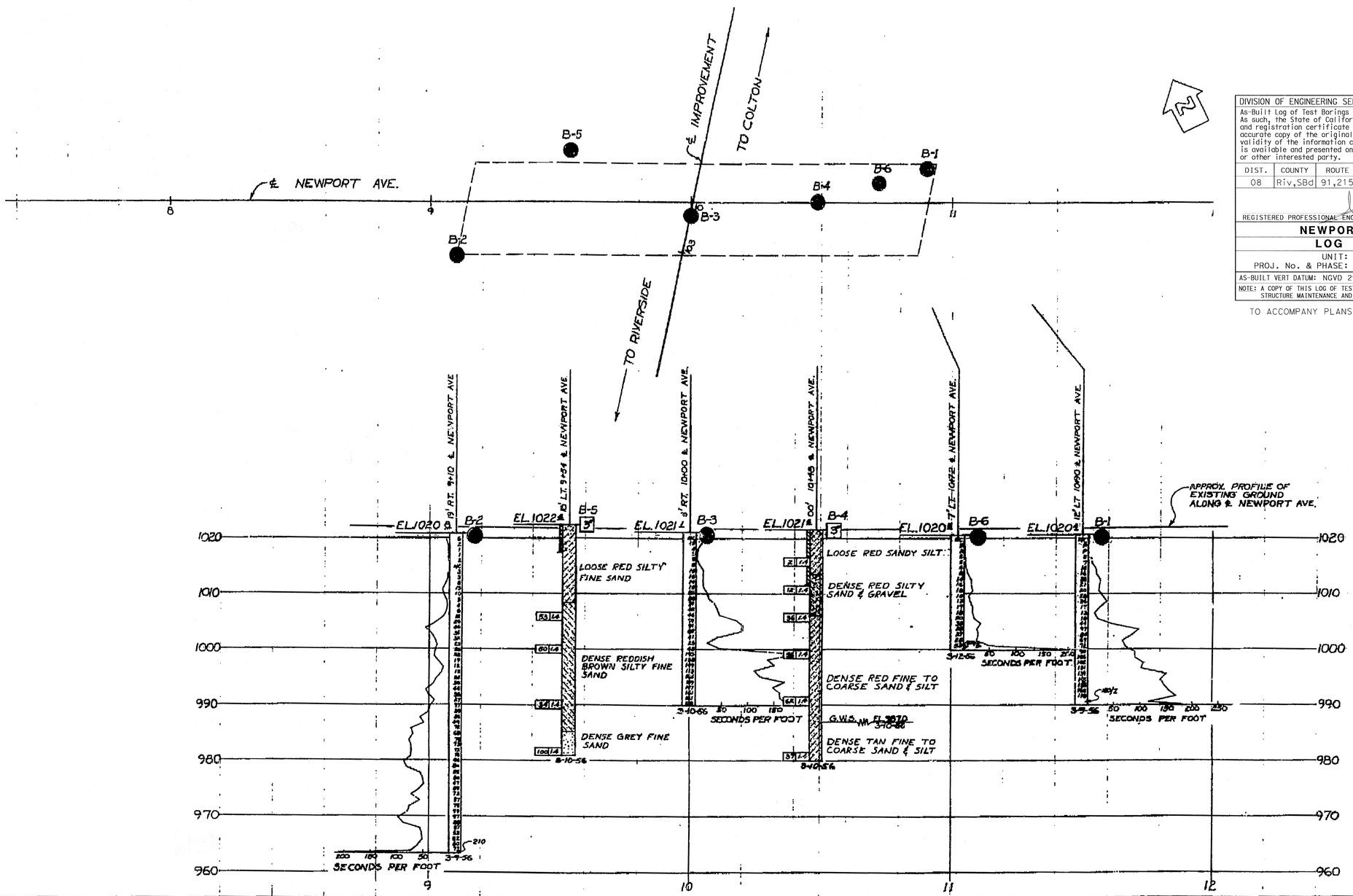

DIVISION OF ENGINEERING SERVICES - MATERIALS AND GEOTECHNICAL SERVICES					
As-Built Log of Test Borings sheet is considered an informational document only. As such, the State of California registration seal with signature, license number and registration certificate expiration date confirm that this is a true and accurate copy of the original document. It does not attest to the accuracy or validity of the information contained in the original document. This drawing is available and presented only for the convenience of any bidder, contractor or other interested party.					
DIST.	COUNTY	ROUTE	POST MILE-TOTAL PROJECT	Sheet No.	Total Sheets
08	Riv,SBd	91,215	21.5/21.7,43.2/45.2,0.0/5.1	1210	1743
REGISTERED PROFESSIONAL ENGINEER			DATE 10/18/11		

REGISTERED PROFESSIONAL ENGINEER Fernando DeHaro No. C65281 Exp. 9-30-13 CIVIL STATE OF CALIFORNIA

NEWPORT AVE OC (REPLACE)

LOG OF TEST BORINGS 4 OF 4

UNIT: 3643	CONTRACT No.	BRIDGE No.
PROJ. No. & PHASE: 08000201091	08-0P5101	54-1294
AS-BUILT VERT DATUM: NGVD 29 CONVERSION: 2.57	Sheet	of

NOTE: A COPY OF THIS LOG OF TEST BORINGS IS AVAILABLE AT OFFICE OF STRUCTURE MAINTENANCE AND INVESTIGATIONS, SACRAMENTO, CALIFORNIA

TO ACCOMPANY PLANS DATED 4-16-12

AS BUILT
CORRECTIONS BY G. Q. Moore
CONTRACT NO. 59-8VC8-F
NO CORRECTIONS THIS SHEET

B.M. 3"ø SS" 5A-54
SP HD NAIL IN 8"x2" RWD HUB BURIED 16"
224' RT. 107+63 ℄ IMP.
ELEV. 1031.02

AS BUILT PLANS
Contract No. 59-8VC8
Date Completed
Document No. 80000766

CLASSIFICATION OF MATERIAL BASED ON STANDARD GRADE SIZE LIMITS

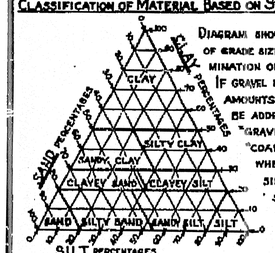

DIAGRAM SHOWING THE BASIS FOR ESTIMATES OF GRADE SIZE DISTRIBUTION USED IN DETERMINATION OF CLASS NAMES.

IF GRAVEL IS PRESENT IN APPRECIABLE AMOUNTS THE TERM "GRAVELLY" MAY BE ADDED TO THE CLASS NAME, VIZ. "GRAVELLY SAND." THE TERMS "COARSE", "MEDIUM" AND "FINE" WHEN USED TO DESCRIBE SAND, SILT AND GRAVEL REFER TO STANDARD GRADE SIZE LIMITS.

LEGEND OF EARTH MATERIALS

- GRAVEL
- SAND
- SILT
- CLAY
- SANDY CLAY OR CLAYEY SAND
- SANDY SILT OR SILTY SAND
- SILTY CLAY OR CLAYEY SILT
- PEAT AND/OR ORGANIC MATTER
- FILL MATERIAL
- IGNEOUS ROCK
- SEDIMENTARY ROCK
- METAMORPHIC ROCK

LEGEND OF BORING OPERATIONS

- PLAN OF ANY BORING
- PENETROMETER
- 2½" CONE PENETROMETER
- SAMPLER BORING (DRY)
- ROTARY BORING (WET)
- AUGER BORING (DRY)
- JET BORING
- CORE BORING
- TEST PIT

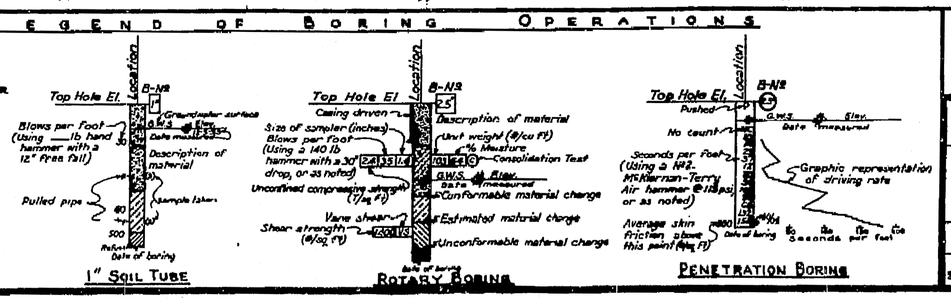

NOTES

The contractor's attention is directed to Section 2, Article (c) of the Standard Specifications and to the Special Provisions accompanying this set of plans.

Classification of earth material as shown on this sheet is based upon field inspection and is not to be construed to imply mechanical analysis.

STATE OF CALIFORNIA
DEPARTMENT OF PUBLIC WORKS
DIVISION OF HIGHWAYS

NEWPORT AVE OVERCROSSING

LOG OF TEST BORINGS 4 of 4

HORIZ. 1"=20' VERT. 1"=10' | BRIDGE 54-529 | FILE E-91 | DRAWING C49-5-3

BRIDGE DEPARTMENT

Approval Recommended by

PRELIM. DRAWING 0P-4959 | 20

FILENAME => 54-1294-z-ltb04.tif

DIST	COUNTY	ROUTE	POST MILES TOTAL PROJECT	SHEET No.	TOTAL SHEETS
08	Riv,SBd	91,215	21.5/21.7, 43.2/45.2,0.0/5.1	1211	1743

REGISTERED CIVIL ENGINEER — DATE 4-06-12

4-16-12
PLANS APPROVAL DATE

REGISTERED PROFESSIONAL ENGINEER — LARRY WU No. C57035 Exp. 6-30-13 CIVIL — STATE OF CALIFORNIA

The State of California or its officers or agents shall not be responsible for the accuracy or completeness of electronic copies of this plan sheet.

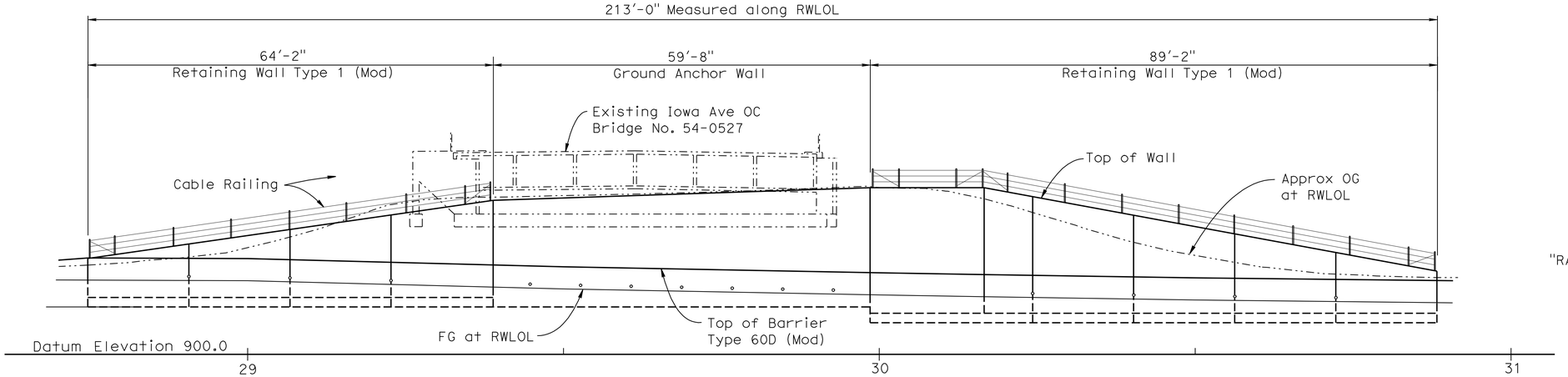

DEVELOPED MIRRORED ELEVATION

1" = 10'

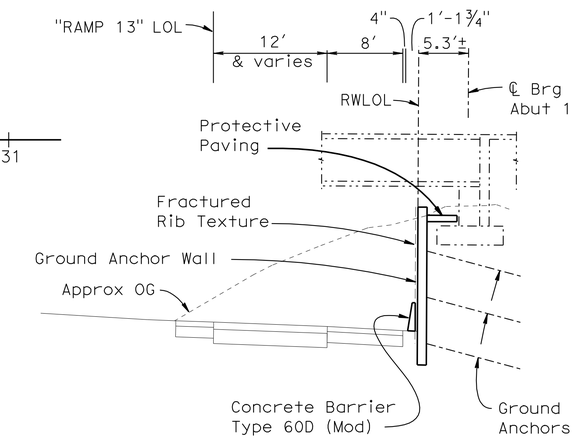

TYPICAL SECTION

⅛" = 1'-0"

Sta 29+38.87 to Sta 29+98.54

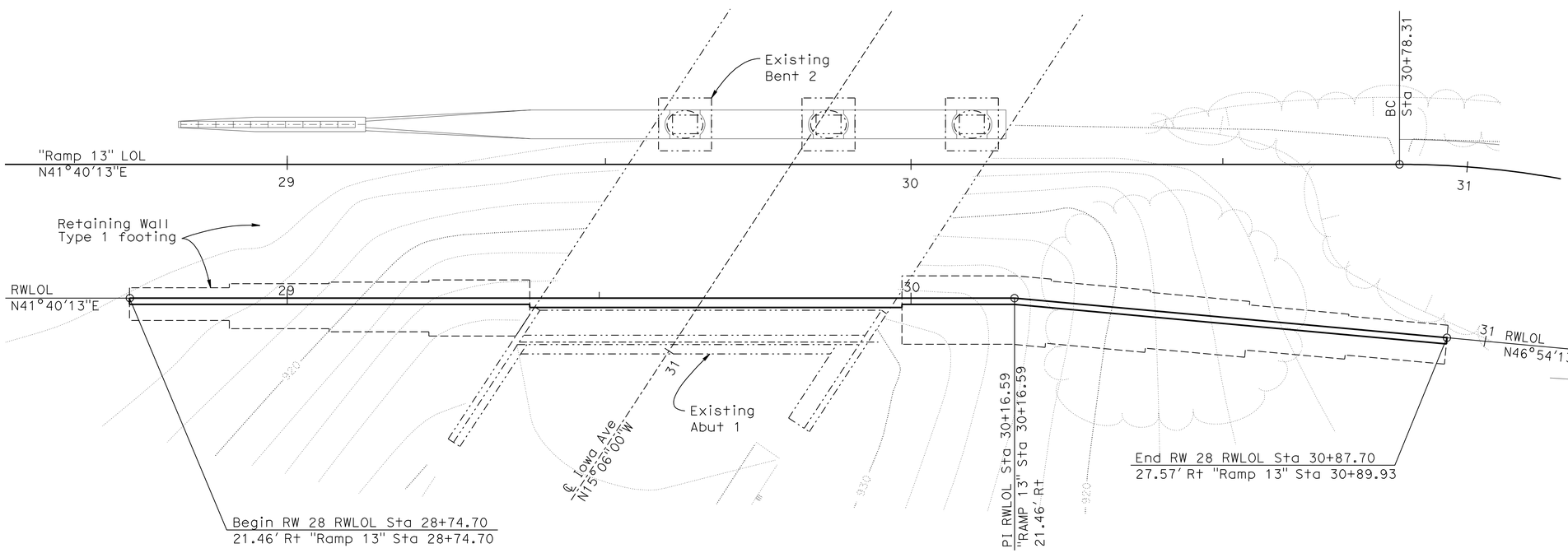

GENERAL PLAN

1" = 10'

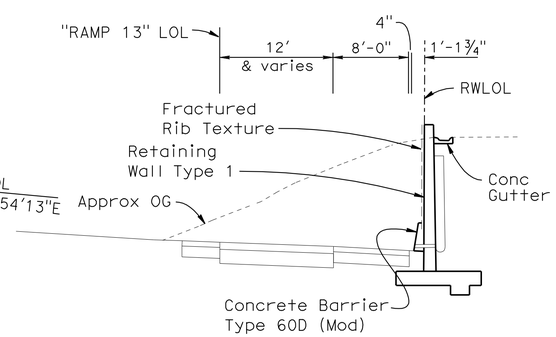

TYPICAL SECTION TYPE 1 RETAINING WALL

⅛" = 1'-0"

Sta 28+74.70 to Sta 29+38.87 and Sta 29+98.54 to Sta 30+87.70

NOTE:
THE CONTRACTOR SHALL VERIFY ALL CONTROLLING FIELD DIMENSIONS BEFORE ORDERING OR FABRICATING ANY MATERIAL.

NOTE:
For Index to Plans, General Notes and Quantities see "INDEX TO PLANS" sheet

DANIEL T. ADAMS — DESIGN ENGINEER	DESIGN	BY T Sanderson	CHECKED H. Vu	LOAD & RESISTANCE FACTOR DESIGN — LIVE LOADING: HL93 W/"LOW-BOY"; PERMIT DESIGN VEHICLE
	DETAILS	BY R. Kirkland	CHECKED H. Vu	LAYOUT — BY T. Sanderson — CHECKED H. Vu
	QUANTITIES	BY D. Azzam	CHECKED J. DeLatorre	SPECIFICATIONS — BY J. Corrado — PLANS AND SPECS COMPARED J. Corrado

ORIGINAL SCALE IN INCHES FOR REDUCED PLANS 0 1 2 3

STATE OF CALIFORNIA
DEPARTMENT OF TRANSPORTATION

DIVISION OF ENGINEERING SERVICES
STRUCTURE DESIGN
DESIGN BRANCH 10

BRIDGE NO. 54E0041
POST MILE 0.4

IOWA AVE OC RETAINING WALL NO. 28
GENERAL PLAN

UNIT: 3589
PROJECT NUMBER & PHASE: 08000005061
CONTRACT NO.: 08-0m9401

DISREGARD PRINTS BEARING EARLIER REVISION DATES
REVISION DATES: 10-04-11 12-30-11 3-02-12

SHEET 1 OF 12

USERNAME => s128843 DATE PLOTTED => 18-APR-2012 TIME PLOTTED => 16:14

STRUCTURES DESIGN GENERAL PLAN SHEET (ENGLISH) (REV.09-01-10)

FILE => 54e0041agp01.dgn

DIST	COUNTY	ROUTE	POST MILES TOTAL PROJECT	SHEET No.	TOTAL SHEETS
08	Riv,SBd	91,215	21.5/21.7, 43.2/45.2,0.0/5.1	1212	1743

REGISTERED CIVIL ENGINEER — DATE 4-06-12

4-16-12
PLANS APPROVAL DATE

REGISTERED PROFESSIONAL ENGINEER — LARRY WU No. C57035 Exp. 6-30-13 CIVIL — STATE OF CALIFORNIA

The State of California or its officers or agents shall not be responsible for the accuracy or completeness of electronic copies of this plan sheet.

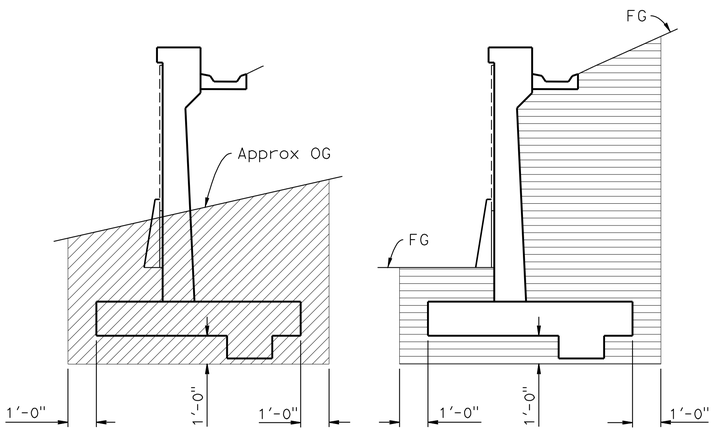

LIMITS OF PAYMENT FOR EXCAVATION & BACKFILL (RETAINING WALL)

NO SCALE

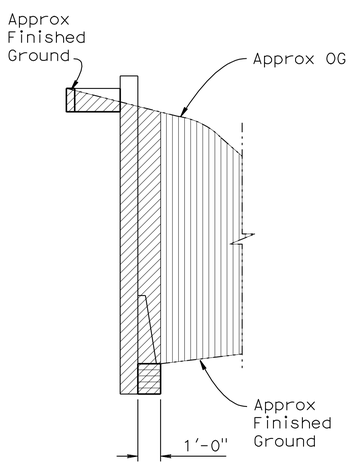

LIMITS OF PAYMENT FOR EXCAVATION & BACKFILL (GROUND ANCHOR WALL)

NO SCALE

LEGEND:

- Structure Excavation (Retaining Wall)
- Structure Backfill (Retaining Wall)
- Roadway Excavation (see Road Plans)

GENERAL NOTES

DESIGN: AASHTO LRFD Bridge Design Specifications 4th Edition with California Amendments, Preface dated Sept. 2010

SOIL PARAMETERS: $\phi = 34°$, $\gamma = 124$ pcf

LIVE LOAD: Surcharge = 2 ft level earth

REINFORCED CONCRETE: $f_y = 60$ ksi (Yield strength of reinforcement); $f_c = 4.0$ ksi (Concrete compressive strength at 28 days)

SHOTCRETE: $f_c = 4.0$ ksi; $f_y = 60$ ksi

PRESTRESSINIG STEEL (GROUND ANCHORS):

Bars - ASTM Designation: A722 Type II (150 ksi)

Strand Tendons-ASTM Designation: A416 (270 Ksi Low Relaxation steel)

First Level FTL = 130 kips
Second Level FTL = 55 kips
Third Level FTL = 35 kips

FTL = Factored Test Load per anchor (Kips)

fpu = Minimum tensile strength of prestressing steel

As = Minimum cross sectional area of prestressing steel in ground anchor (square inch)

$$As(Min) = \frac{1.0\ FTL}{0.75\ fpu} \quad \text{(Strands)}$$

$$As(Min) = \frac{1.0\ FTL}{0.80\ fpu} \quad \text{(Bars)}$$

STRUCTURAL STEEL: ASTM Designation A709 Grade 36; fy = 36 ksi

QUANTITIES

STRUCTURE EXCAVATION (RETAINING WALL)	656	CY
STRUCTURE EXCAVATION (GROUND ANCHOR WALL)	90	CY
STRUCTURE BACKFILL (RETAINING WALL)	296	CY
STRUCTURE BACKFILL (GROUND ANCHOR WALL)	6	CY
PERVIOUS BACKFILL MATERIAL	47	CY
GROUND ANCHOR	24	EA
STRUCTURAL CONCRETE, RETAINING WALL	216	CY
FRACTURED RIB TEXTURE	1,497	SQFT
BAR REINFORCING STEEL (RETAINING WALL)	42,659	LB
SHOTCRETE	34	CY
PREPARE AND STAIN CONCRETE	1,497	SQFT
MINOR CONCRETE (GUTTER)	154	LF
CABLE RAILING	154	LF
CONCRETE BARRIER (TYPE 60D MOD)	213	LF

INDEX TO PLANS

Sheet No.	Title
1	GENERAL PLAN
2	INDEX TO PLANS
3	STRUCTURE PLAN NO. 1
4	STRUCTURE PLAN NO. 2
5	WALL DETAILS
6	DRAINAGE DETAILS
7	SUB HORIZONTAL GROUND ANCHOR DETAILS
8	ARCHITECTURAL DETAILS
9	LOG OF TEST BORINGS 1 OF 4
10	LOG OF TEST BORINGS 2 OF 4
11	LOG OF TEST BORINGS 3 OF 4
12	LOG OF TEST BORINGS 4 OF 4

STANDARD PLANS DATED MAY 2006

A10A	ACRONYMS AND ABBREVIATIONS (SHEET 1 OF 2)
A10B	ACRONYMS AND ABBREVIATIONS (SHEET 2 OF 2)
A10C	SYMBOLS (SHEET 1 OF 2)
A10D	SYMBOLS (SHEET 2 OF 2)
A62B	LIMITS OF PAYMENT FOR EXCAVATION AND BACKFILL BRIDGE SURCHARGE & WALL
B0-1	BRIDGE DETAILS
B0-3	BRIDGE DETAILS
B3-1	RETAINING WALL TYPE 1 H=4' THROUGH 30'
B3-8	RETAINING WALL DETAILS NO. 1
B3-9	RETAINING WALL DETAILS NO. 2
B11-47	CABLE RAILING

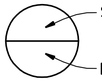

NOTE:
THE CONTRACTOR SHALL VERIFY ALL CONTROLLING FIELD DIMENSIONS BEFORE ORDERING OR FABRICATING ANY MATERIAL.

	BY	CHECKED
DESIGN	T. Sanderson	H. Vu
DETAILS	R. Kirkland	H. Vu
QUANTITIES	D. Azzam	J. DeLatorre

STATE OF CALIFORNIA
DEPARTMENT OF TRANSPORTATION

DIVISION OF ENGINEERING SERVICES
STRUCTURE DESIGN
DESIGN BRANCH 10

BRIDGE NO. 54E0041
POST MILE 0.4

IOWA AVE OC RETAINING WALL NO. 28
INDEX TO PLANS

STRUCTURES DESIGN DETAIL SHEET (ENGLISH) (REV. 09-01-10)

ORIGINAL SCALE IN INCHES FOR REDUCED PLANS 0 1 2 3

UNIT: 3589
PROJECT NUMBER & PHASE: 08000005061
CONTRACT NO.: 08-0m9401

DISREGARD PRINTS BEARING EARLIER REVISION DATES

REVISION DATES: 12-30-11, 3-28-12

SHEET 2 OF 12

FILE => 54e0041a1tp02.dgn

USERNAME => s124496 DATE PLOTTED => 14-JUN-2012 TIME PLOTTED => 06:15

DIST	COUNTY	ROUTE	POST MILES TOTAL PROJECT	SHEET No.	TOTAL SHEETS
08	Riv,SBd	91,215	21.5/21.7, 43.2/45.2,0.0/5.1	1213	1743

REGISTERED CIVIL ENGINEER — DATE 4-06-12

4-16-12
PLANS APPROVAL DATE

REGISTERED PROFESSIONAL ENGINEER — LARRY WU No. C57035 Exp. 6-30-13 CIVIL STATE OF CALIFORNIA

The State of California or its officers or agents shall not be responsible for the accuracy or completeness of electronic copies of this plan sheet.

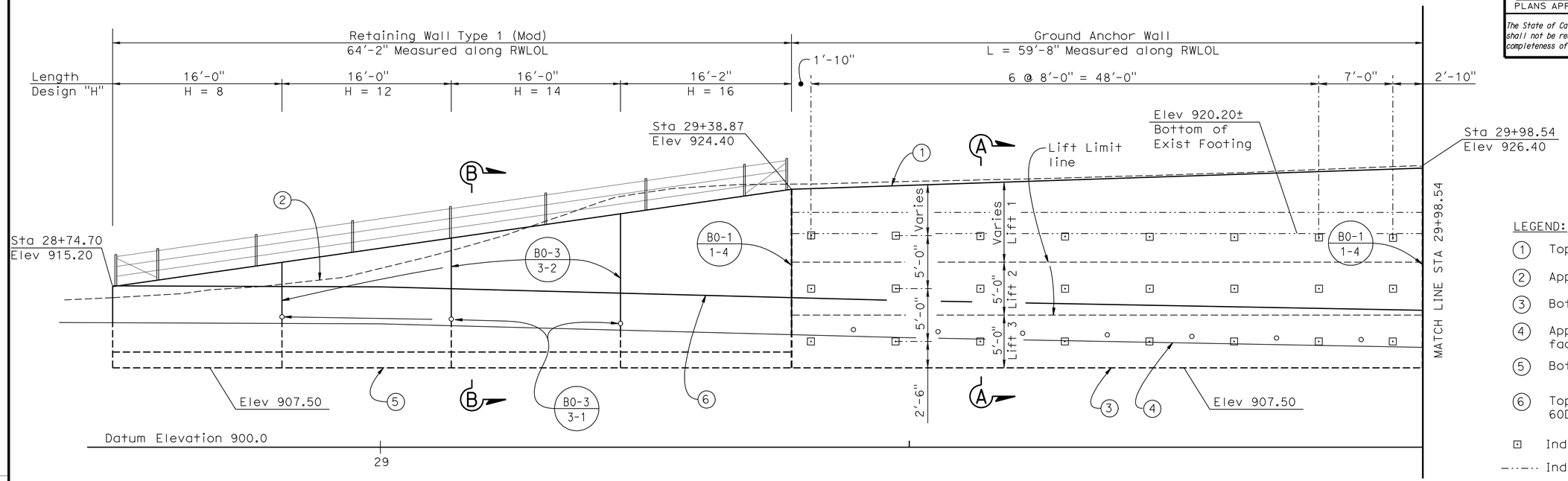

DEVELOPED MIRRORED ELEVATION

3/16" = 1'-0"

LEGEND:

1. Top of Ground Anchor Wall
2. Approx Original Ground at RWLOL
3. Bottom of Ground Anchor Wall
4. Approximate Finished Grade at face of wall.
5. Bottom of Footing at Type 1 Wall
6. Top of Concrete Barrier Type 60D (Mod)

⊡ Indicates Ground Anchor locations

–·–·– Indicates Existing Structure

NOTES:

1. For Section A-A and Section B-B, see "WALL DETAILS" sheet.

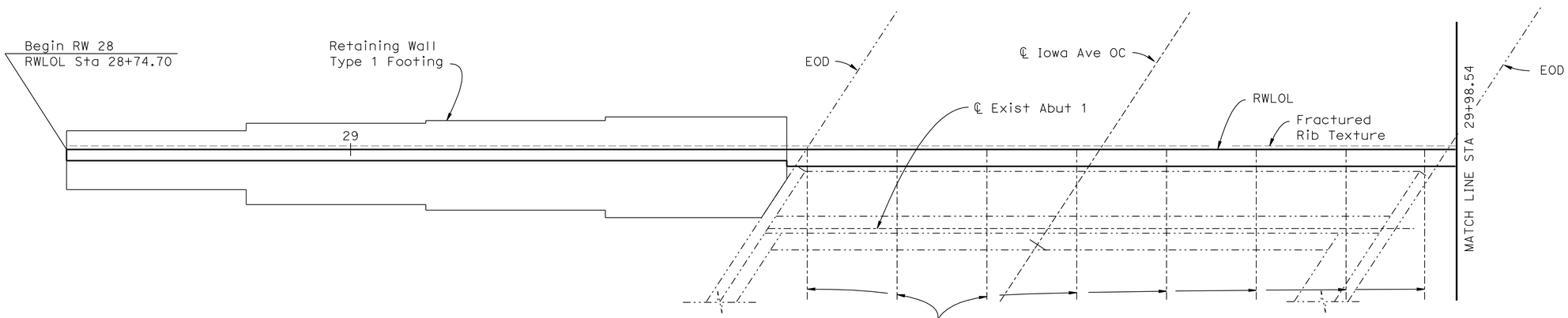

PLAN

3/16" = 1'-0"

NOTE:
THE CONTRACTOR SHALL VERIFY ALL CONTROLLING FIELD DIMENSIONS BEFORE ORDERING OR FABRICATING ANY MATERIAL.

	BY	CHECKED
DESIGN	T. Sanderson	H. Vu
DETAILS	R. Kirkland	H. Vu
QUANTITIES	D. Azzam	J. DeLatorre

STATE OF CALIFORNIA
DEPARTMENT OF TRANSPORTATION

DIVISION OF ENGINEERING SERVICES
STRUCTURE DESIGN
DESIGN BRANCH 10

BRIDGE NO. 54E0041
POST MILE 0.4

IOWA AVE OC RETAINING WALL NO. 28
STRUCTURE PLAN NO. 1

STRUCTURES DESIGN DETAIL SHEET (ENGLISH) (REV. 09-01-10)

ORIGINAL SCALE IN INCHES FOR REDUCED PLANS 0 1 2 3

UNIT: 3589
PROJECT NUMBER & PHASE: 08000005061
CONTRACT NO.: 08-0m9401

DISREGARD PRINTS BEARING EARLIER REVISION DATES 12-30-11 3-02-12

SHEET 3 OF 12

FILE => 54e0041csp03.dgn

USERNAME => s128843 DATE PLOTTED => 18-APR-2012 TIME PLOTTED => 16:14

DIST	COUNTY	ROUTE	POST MILES TOTAL PROJECT	SHEET No.	TOTAL SHEETS
08	Riv,SBd	91,215	21.5/21.7, 43.2/45.2,0.0/5.1	1214	1743

REGISTERED CIVIL ENGINEER 4-06-12 DATE

4-16-12
PLANS APPROVAL DATE

REGISTERED PROFESSIONAL ENGINEER LARRY WU No. C57035 Exp. 6-30-13 CIVIL STATE OF CALIFORNIA

The State of California or its officers or agents shall not be responsible for the accuracy or completeness of electronic copies of this plan sheet.

NOTE:
Cable Railing not shown for clarity

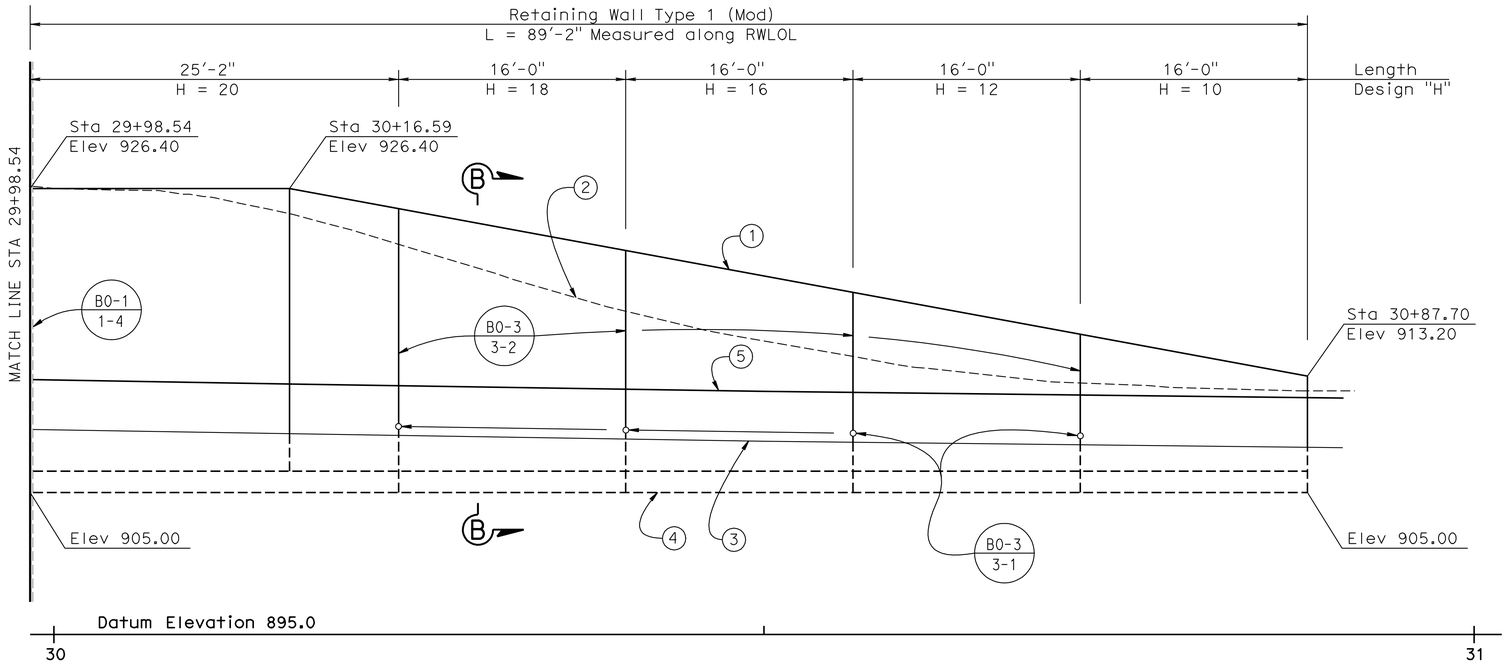

DEVELOPED MIRRORED ELEVATION

3/16" = 1'-0"

LEGEND:

1. Top of Retaining Wall Type 1
2. Approx Original Ground at RWLOL
3. Approximate Finished Grade at face of wall.
4. Bottom of Footing at Retaining Type 1
5. Top of Concrete Barrier

NOTES:

1. For Section A-A and Section B-B, see "WALL DETAILS" sheet.

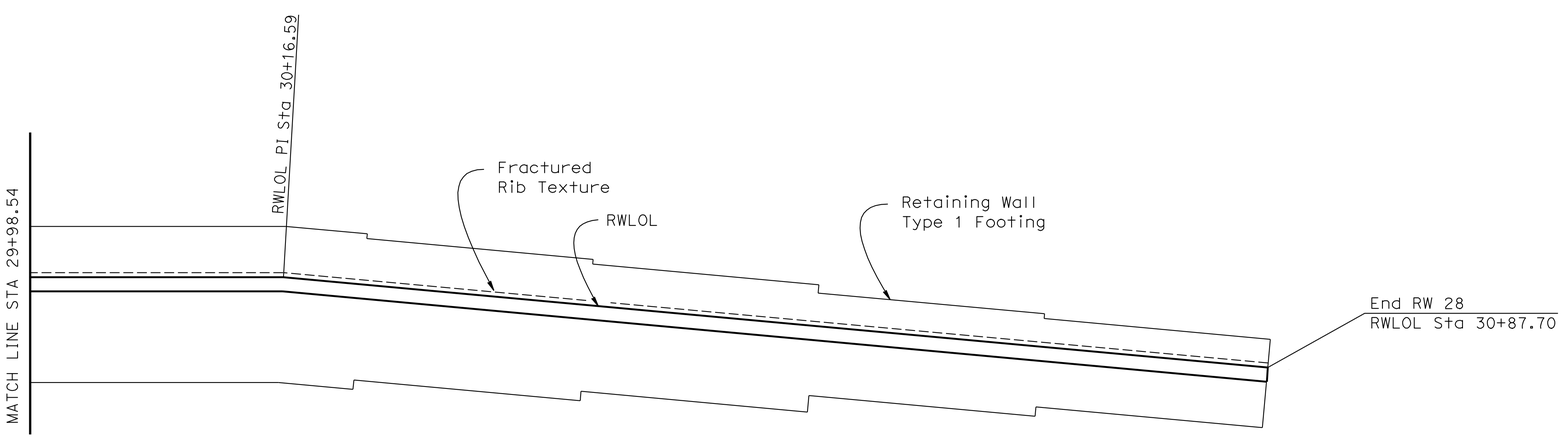

PLAN

3/16" = 1'-0"

NOTE:
THE CONTRACTOR SHALL VERIFY ALL CONTROLLING FIELD DIMENSIONS BEFORE ORDERING OR FABRICATING ANY MATERIAL.

	BY	CHECKED
DESIGN	T. Sanderson	H. Vu
DETAILS	R. Kirkland	H. Vu
QUANTITIES	D. Azzam	J. DeLatorre

STATE OF CALIFORNIA
DEPARTMENT OF TRANSPORTATION

DIVISION OF ENGINEERING SERVICES
STRUCTURE DESIGN
DESIGN BRANCH 10

BRIDGE NO. 54E0041
POST MILE 0.4

IOWA AVE OC RETAINING WALL NO. 28
STRUCTURE PLAN NO. 2

STRUCTURES DESIGN DETAIL SHEET (ENGLISH) (REV. 09-01-10)

ORIGINAL SCALE IN INCHES FOR REDUCED PLANS 0 1 2 3

UNIT: 3589
PROJECT NUMBER & PHASE: 08000005061
CONTRACT NO.: 08-0m9401

DISREGARD PRINTS BEARING EARLIER REVISION DATES

REVISION DATES 12-30-11 3-02-12

SHEET 4 OF 12

FILE => 54e0041csp04.dgn

USERNAME => s128843 DATE PLOTTED => 18-APR-2012 TIME PLOTTED => 16:14

DIST	COUNTY	ROUTE	POST MILES TOTAL PROJECT	SHEET No.	TOTAL SHEETS
08	Riv,SBd	91,215	21.5/21.7, 43.2/45.2,0.0/5.1	1215	1743

REGISTERED CIVIL ENGINEER 4-06-12 DATE

4-16-12
PLANS APPROVAL DATE

REGISTERED PROFESSIONAL ENGINEER LARRY WU No. C57035 Exp. 6-30-13 CIVIL STATE OF CALIFORNIA

The State of California or its officers or agents shall not be responsible for the accuracy or completeness of electronic copies of this plan sheet.

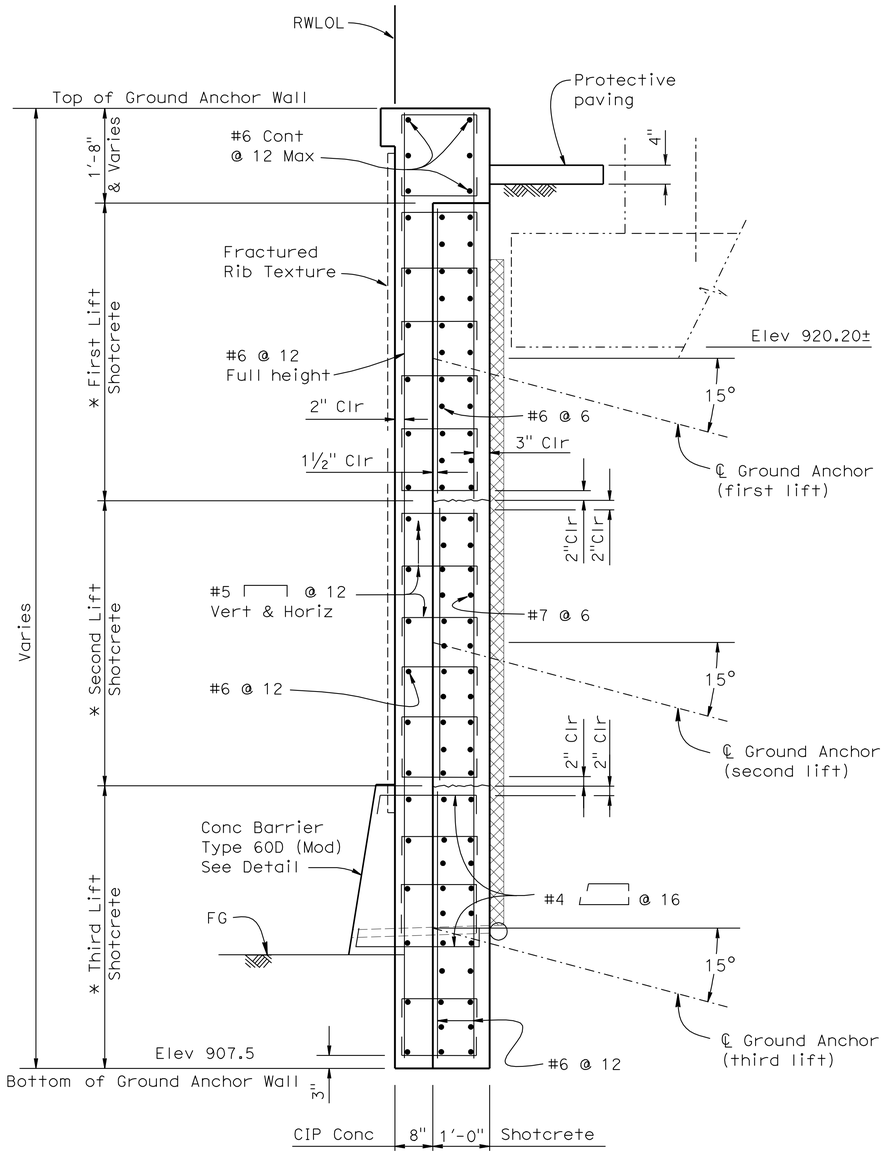

SECTION A-A

¾" = 1'-0"

* For Dimensions see "STRUCTURAL PLAN NO. 1" sheet.

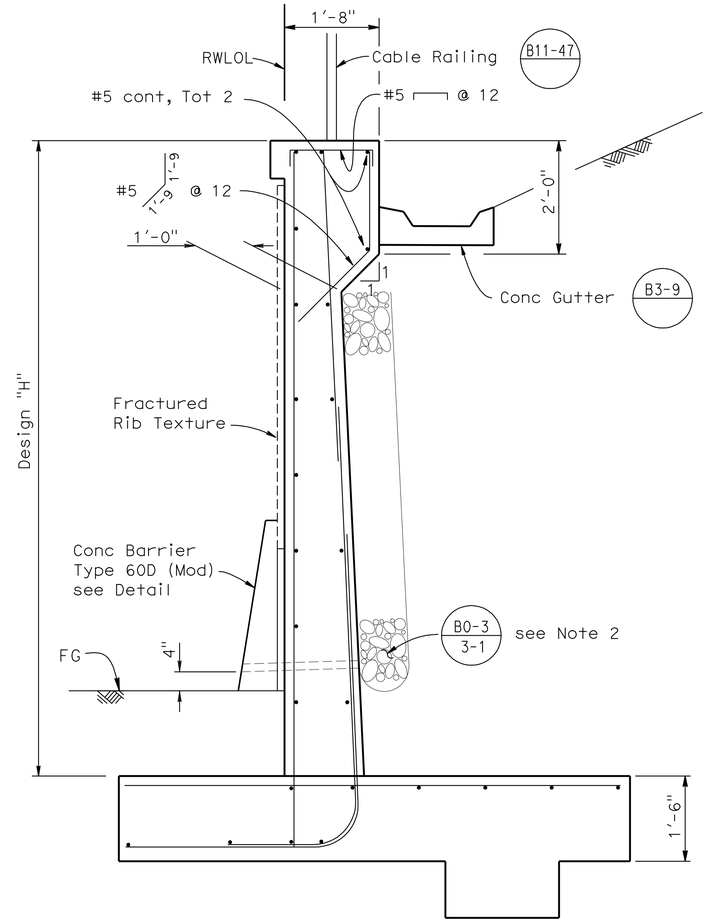

NOTE: For Details not shown see B3-1

SECTION B-B

¾" = 1'-0"

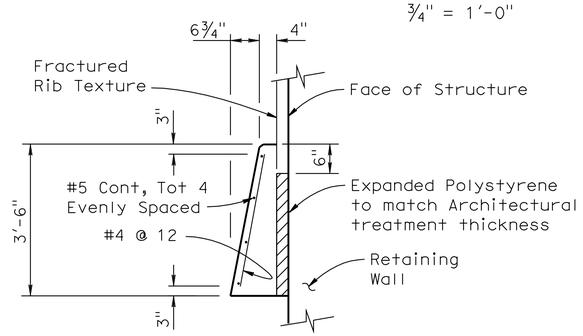

CONCRETE BARRIER TYPE 60(MOD)

No Scale

NOTES:

1. For Horizontal & Vertical spacing of Ground Anchors see "STRUCTURE PLAN NO. 1" sheet.
2. For Alternate to B0-3/3-1 see "DRAINAGE DETAILS" sheet.
3. Maintain 6" min clearance between reinforcement and ℄ of Ground Anchors.
4. CIP concrete to be placed after completion of all shotcrete lifts.
5. Ground Anchors shall be constructed and locked off one at a time. Start at the top and work down.
6. For Lift Limit Line, see "STRUCTURE PLAN NO.1" sheet.
7. For location of "SECTION A-A" and "SECTION B-B", see "STRUCTURE PLAN NO.1" & "STRUCTURE PLAN NO.2" sheets.

NOTE:
THE CONTRACTOR SHALL VERIFY ALL CONTROLLING FIELD DIMENSIONS BEFORE ORDERING OR FABRICATING ANY MATERIAL.

	BY	CHECKED
DESIGN	T. Sanderson	H. Vu
DETAILS	R. Kirkland	H. Vu
QUANTITIES	D. Azzam	J. DeLatorre

STATE OF CALIFORNIA DEPARTMENT OF TRANSPORTATION

DIVISION OF ENGINEERING SERVICES STRUCTURE DESIGN DESIGN BRANCH 10

BRIDGE NO. 54E0041
POST MILE 0.4

IOWA AVE OC RETAINING WALL NO. 28
WALL DETAILS

STRUCTURES DESIGN DETAIL SHEET (ENGLISH) (REV. 09-01-10)

ORIGINAL SCALE IN INCHES FOR REDUCED PLANS 0 1 2 3

UNIT: 3589
PROJECT NUMBER & PHASE: 08000005061
CONTRACT NO.: 08-0m9401

DISREGARD PRINTS BEARING EARLIER REVISION DATES

REVISION DATES 12-30-11 3-02-12

SHEET 5 OF 12

FILE => 54e0041grwdt05.dgn

USERNAME => s128843 DATE PLOTTED => 18-APR-2012 TIME PLOTTED => 16:14

DIST	COUNTY	ROUTE	POST MILES TOTAL PROJECT	SHEET No.	TOTAL SHEETS
08	Riv,SBd	91,215	21.5/21.7, 43.2/45.2,0.0/5.1	1216	1743

REGISTERED CIVIL ENGINEER 4-06-12 DATE

4-16-12
PLANS APPROVAL DATE

REGISTERED PROFESSIONAL ENGINEER LARRY WU No. C57035 Exp. 6-30-13 CIVIL STATE OF CALIFORNIA

The State of California or its officers or agents shall not be responsible for the accuracy or completeness of electronic copies of this plan sheet.

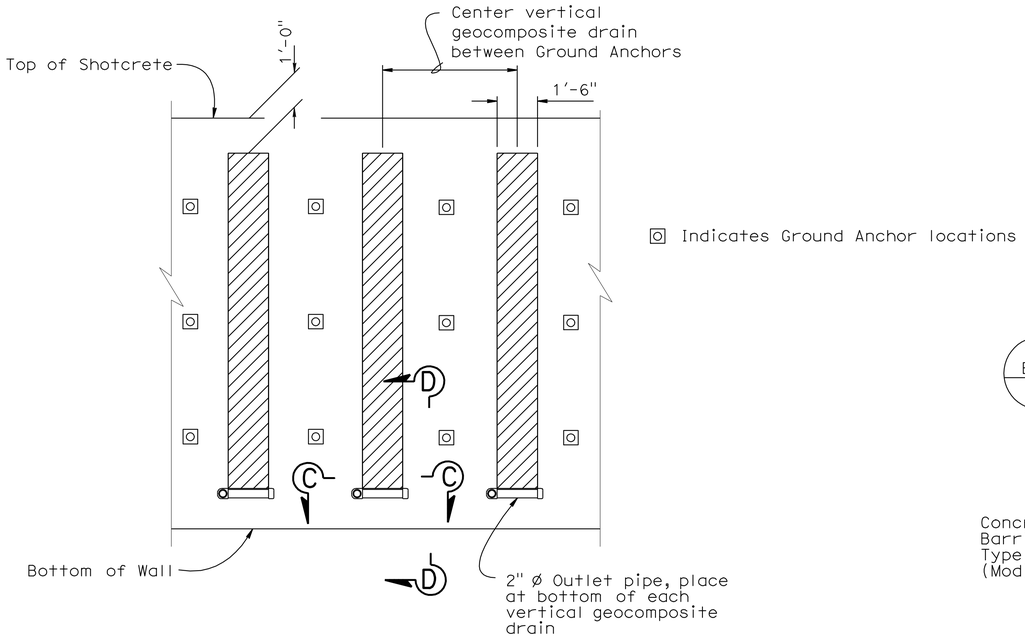

WALL PART ELEVATION

No Scale

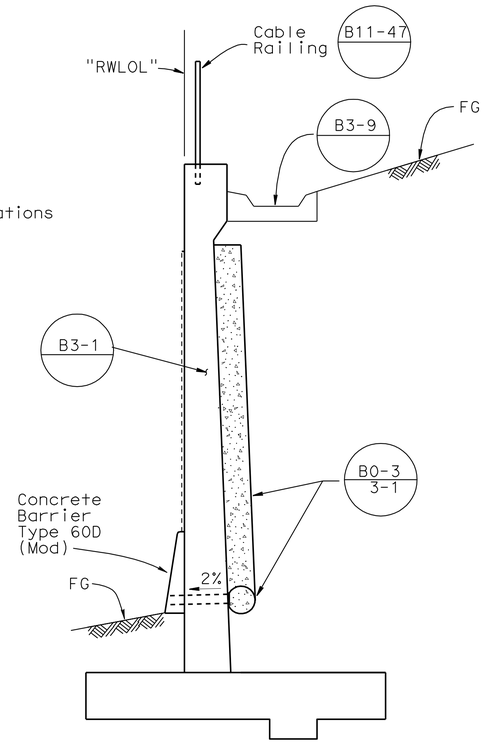

TYPICAL SECTION RETAINING WALL DRAINAGE

No Scale

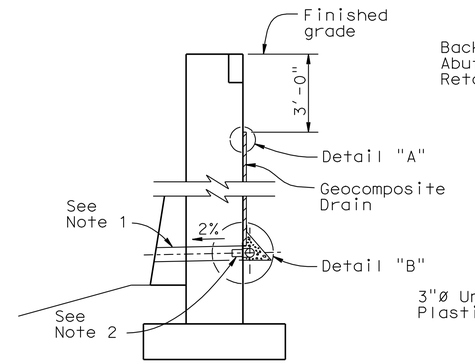

WALL SECTION

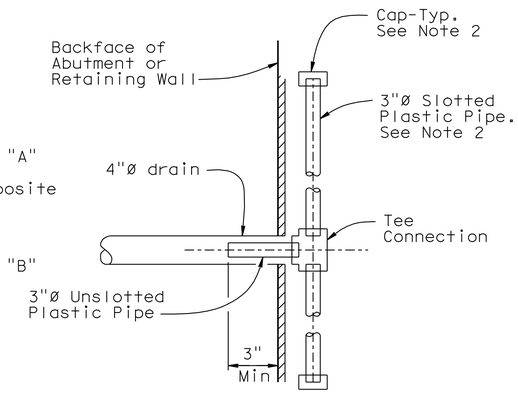

SECTION A-A

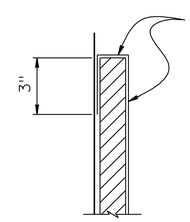

DETAIL "A"

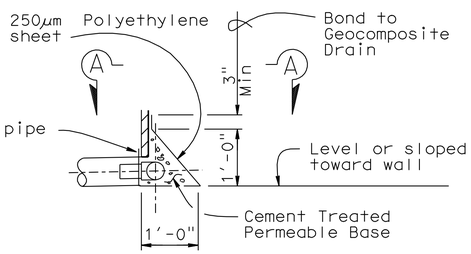

DETAIL "B"

WEEP HOLE AND GEOCOMPOSITE DRAIN

ALTERNATIVE TO BRIDGE DETAIL B0-3 / 3-1

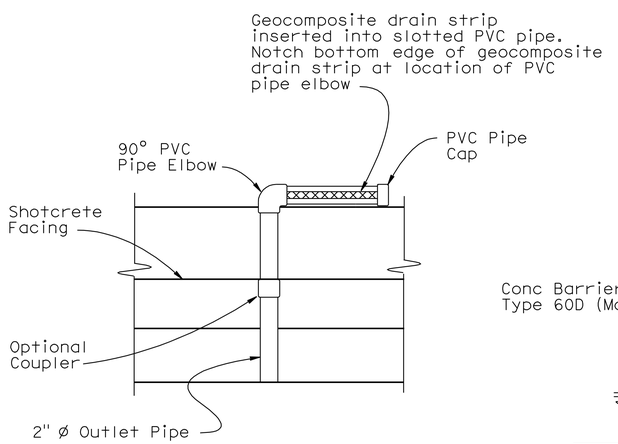

SECTION C-C

No Scale

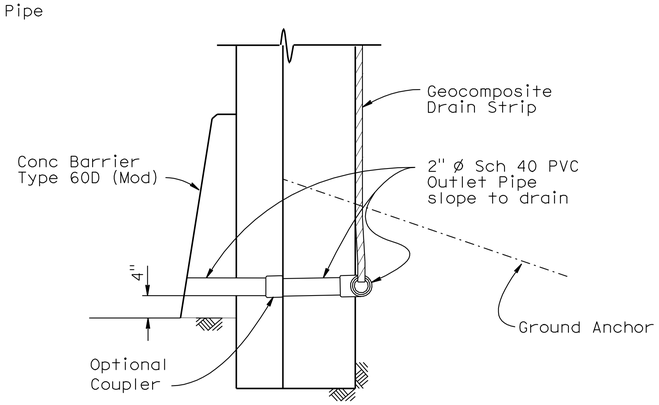

SECTION D-D

No Scale

NOTES:

1. 4"ø drains at intermediate sag points and at 25'-0" center to center. For walls adjacent to sidewalks or curbs, provide 4" cast iron or asbestos cement pipe under the sidewalk to discharge through curb face. Exposed wall drains shall be located 3"± above finished grade.
2. Geocomposite drain, cement treated permeable base, and 3"ø slotted plastic pipe continuous behind retaining wall or abutment. Cap ends of pipe. Provide "Tee" connection at each 4"ø drain.
3. Connect the low end of plastic pipe to the main outlet pipe as applicable.

NOTE:
THE CONTRACTOR SHALL VERIFY ALL CONTROLLING FIELD DIMENSIONS BEFORE ORDERING OR FABRICATING ANY MATERIAL.

	BY	CHECKED
DESIGN	T. Sanderson	H. Vu
DETAILS	R. Kirkland	H. Vu
QUANTITIES	D. Azzam	J. DeLatorre

STATE OF CALIFORNIA
DEPARTMENT OF TRANSPORTATION

DIVISION OF ENGINEERING SERVICES
STRUCTURE DESIGN
DESIGN BRANCH 10

BRIDGE NO. 54E0041
POST MILE 0.4

IOWA AVE OC RETAINING WALL NO. 28
DRAINAGE DETAILS

STRUCTURES DESIGN DETAIL SHEET (ENGLISH) (REV. 09-01-10)

ORIGINAL SCALE IN INCHES FOR REDUCED PLANS 0 1 2 3

UNIT: 3589
PROJECT NUMBER & PHASE: 08000005061
CONTRACT NO.: 08-0m9401

DISREGARD PRINTS BEARING EARLIER REVISION DATES

REVISION DATES 11-04-11 12-30-11 3-02-12

SHEET 6 OF 12

FILE => 54e0041grwdt06.dgn

USERNAME => s121614 DATE PLOTTED => 18-APR-2012 TIME PLOTTED => 17:23

DIST	COUNTY	ROUTE	POST MILES TOTAL PROJECT	SHEET No.	TOTAL SHEETS
08	Riv,SBd	91,215	21.5/21.7, 43.2/45.2,0.0/5.1	1217	1743

REGISTERED CIVIL ENGINEER — DATE 4-06-12

4-16-12
PLANS APPROVAL DATE

REGISTERED PROFESSIONAL ENGINEER — LARRY WU No. C57035 Exp. 6-30-13 CIVIL — STATE OF CALIFORNIA

The State of California or its officers or agents shall not be responsible for the accuracy or completeness of electronic copies of this plan sheet.

NOTES:

(A) Level of initial grouting for drill hole 6" in diameter or smaller

(B) Level of secondary grouting

(C) Level of initial grouting inside corrugated sheathing

(D) Bonded length shall be determined by the contractor

(E) For unbonded length, see Geotech Report

(F) For inclination, see "WALL DETAILS" sheet

(G) Face of Wall Excavation

NOTES:

1. Anchorage enclosure shall only be used when anchor head assembly is not enclosed in concrete.
2. Anchorage enclosure shall have provisions to allow injecting grout at low end and venting at high end. Galvanize after fabrication.
3. Silicone sealant to cover full width of flange.
4. Steel tube (Min thickness = 1/4") welded to bearing plate. Galvanize assembly after fabrication
5. Steel tube welded to bearing plate. Inside diameter of steel tube (Min thickness = 1/4") to be 1" greater than outside diameter of smooth sheathing.
6. Galvanize assembly after fabrication.
7. For other wall details, see PROJECT PLANS.

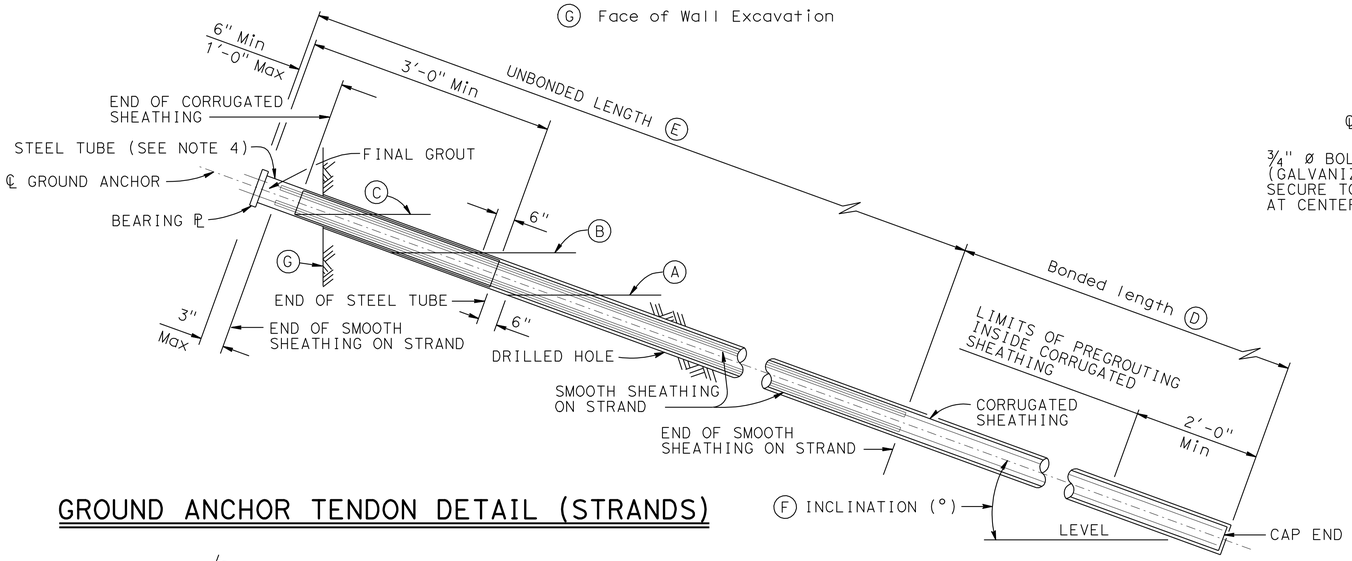

GROUND ANCHOR TENDON DETAIL (STRANDS)

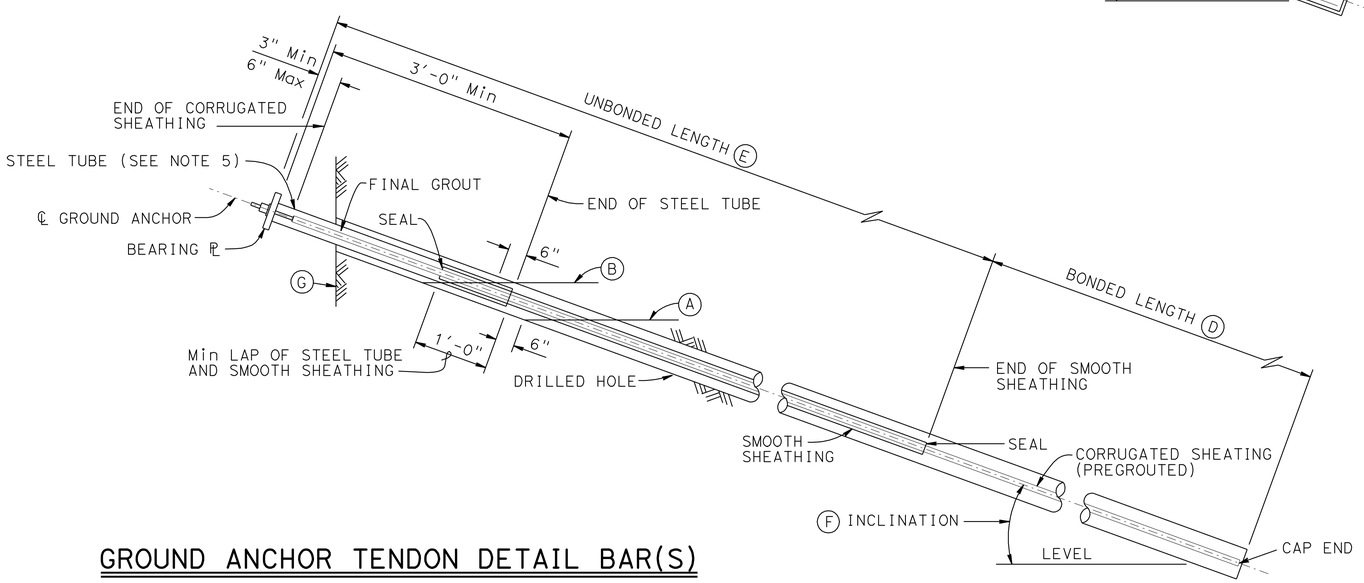

GROUND ANCHOR TENDON DETAIL BAR(S)

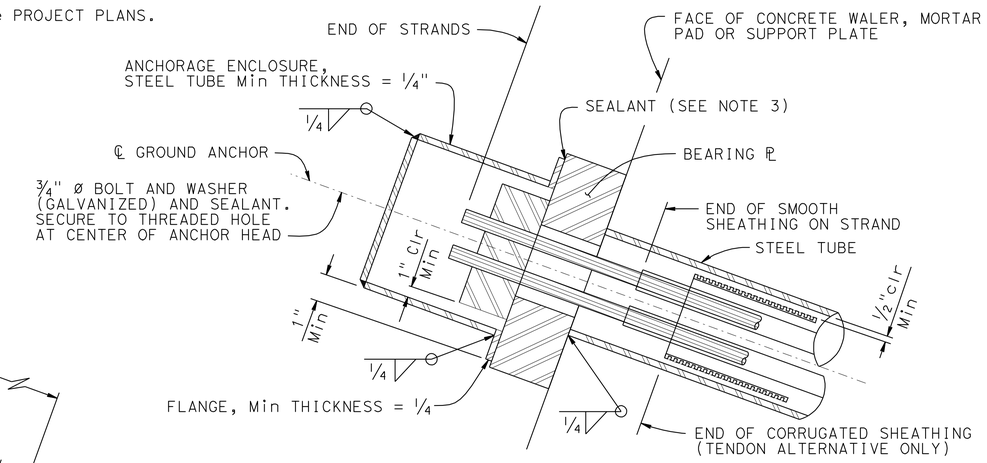

ALTERNATIVE X

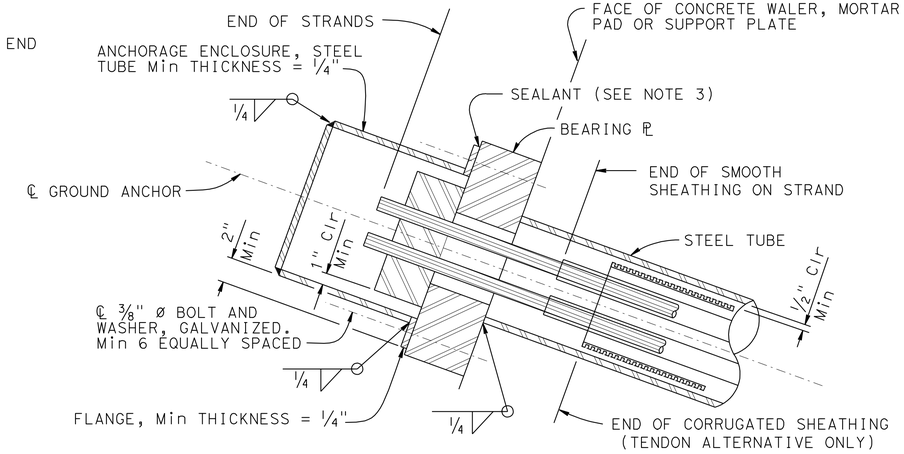

ALTERNATIVE Y

ANCHORAGE ENCLOSURE DETAILS

NO SCALE

REVISED STANDARD DRAWING		STATE OF CALIFORNIA DEPARTMENT OF TRANSPORTATION	DIVISION OF ENGINEERING SERVICES	BRIDGE NO. 54E0041	IOWA AVE OC RETAINING WALL NO. 28
FILE NO. xs12-040	APPROVAL DATE July 2011			POST MILE 0.4	SUB HORIZONTAL GROUND ANCHOR DETAILS

DS OSD 2147A (ENGLISH STANDARD DRAWING "XS" BORDER REV. (02-02-11)

ORIGINAL SCALE IN INCHES FOR REDUCED PLANS 0 1 2 3

UNIT: 3589
PROJECT NUMBER & PHASE: 08000005061 CONTRACT NO.: 08-0m9401

DISREGARD PRINTS BEARING EARLIER REVISION DATES → 12-30-11 5-02-12

SHEET 7 OF 12

FILE => 54e0041xs12-040_07.dgn

USERNAME => s121614 DATE PLOTTED => 18-APR-2012 TIME PLOTTED => 17:24

DIST	COUNTY	ROUTE	POST MILES TOTAL PROJECT	SHEET No.	TOTAL SHEETS
08	Riv,SBd	91,215	21.5/21.7, 43.2/45.2,0.0/5.1	1218	1743

LICENSED LANDSCAPE ARCHITECT — DATE 3-29-12

4-16-12
PLANS APPROVAL DATE

LICENSED LANDSCAPE ARCHITECT — RAY DESSELLE — No. 2916 — Exp. 11-30-13 — STATE OF CALIFORNIA

The State of California or its officers or agents shall not be responsible for the accuracy or completeness of electronic copies of this plan sheet.

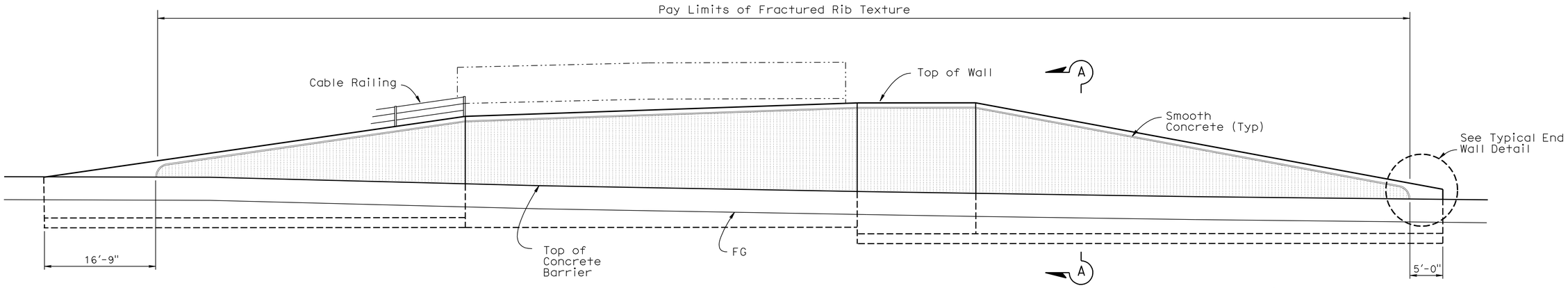

MIRRORED ELEVATION

1/8" = 1'-0"

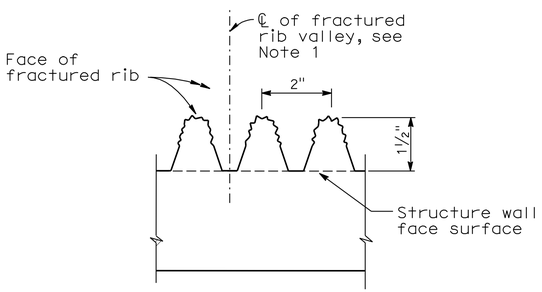

TYPICAL FRACTURED RIB TEXTURE

No Scale

NOTE:

1. Permitted location of weaken plane and expansion joints

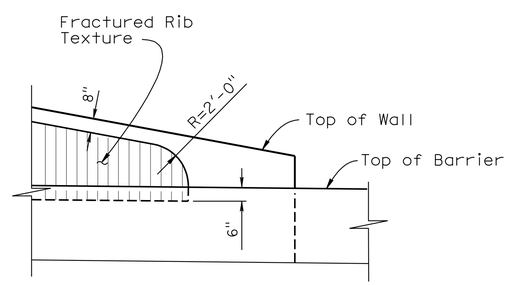

TYPICAL END WALL DETAIL

No Scale

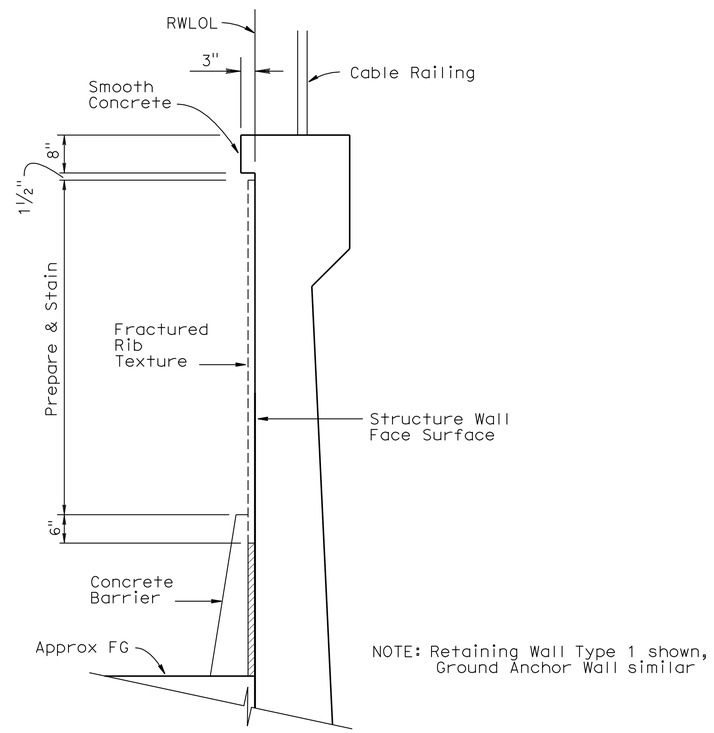

SECTION A-A

No Scale

NOTE:
THE CONTRACTOR SHALL VERIFY ALL CONTROLLING FIELD DIMENSIONS BEFORE ORDERING OR FABRICATING ANY MATERIAL.

	BY	CHECKED
DESIGN	T. Sanderson	H. Vu
DETAILS	R. Kirkland	H. Vu
QUANTITIES	D. Azzam	J. DeLatorre

STATE OF CALIFORNIA
DEPARTMENT OF TRANSPORTATION

DIVISION OF ENGINEERING SERVICES
STRUCTURE DESIGN
DESIGN BRANCH 10

BRIDGE NO. 54E0041
POST MILE 0.4

IOWA AVE OC RETAINING WALL NO. 28
ARCHITECTURAL DETAILS

STRUCTURES DESIGN DETAIL SHEET (ENGLISH) (REV. 09-01-10)

ORIGINAL SCALE IN INCHES FOR REDUCED PLANS 0 1 2 3

UNIT: 3589
PROJECT NUMBER & PHASE: 08000005061
CONTRACT NO.: 08-0m9401

DISREGARD PRINTS BEARING EARLIER REVISION DATES
REVISION DATES 11-04-11 12-30-11 2-10-12

SHEET 8 OF 12

FILE => 54e0041yadt08.dgn

USERNAME => s127614 DATE PLOTTED => 18-APR-2012 TIME PLOTTED => 17:24

DIST	COUNTY	ROUTE	POST MILES TOTAL PROJECT	SHEET No	TOTAL SHEETS
08	Riv,SBd	91,215	21.5/21.7, 43.2/45.2,0.0/5.1	1219	1743

PROFESSIONAL GEOLOGIST 12-21-11

4-16-12
PLANS APPROVAL DATE

PROFESSIONAL GEOLOGIST Mark Wilson No. 8164 Exp. 06-30-12 STATE OF CALIFORNIA

The State of California or its officers or agents shall not be responsible for the accuracy or completeness of electronic copies of this plan sheet.

This LOTB sheet was prepared in accordance with the Caltrans Soil & Rock Logging, Classification, & Presentation Manual (June 2007).

BENCH MARK

BM 048
Set 1" IP W/ALUM PLUG STAMPED "SBD 215 PM 0.48 GPS 2010" TOP SLOPE NB IOWA AVE ON-RAMP; 13' WLY R/W FENCE; 6' WLY CL V-DITCH; 70' NELY RAMP METER SIGNAL.
N 1,832,045.099
E 6,763,416.060
Elev 927.971

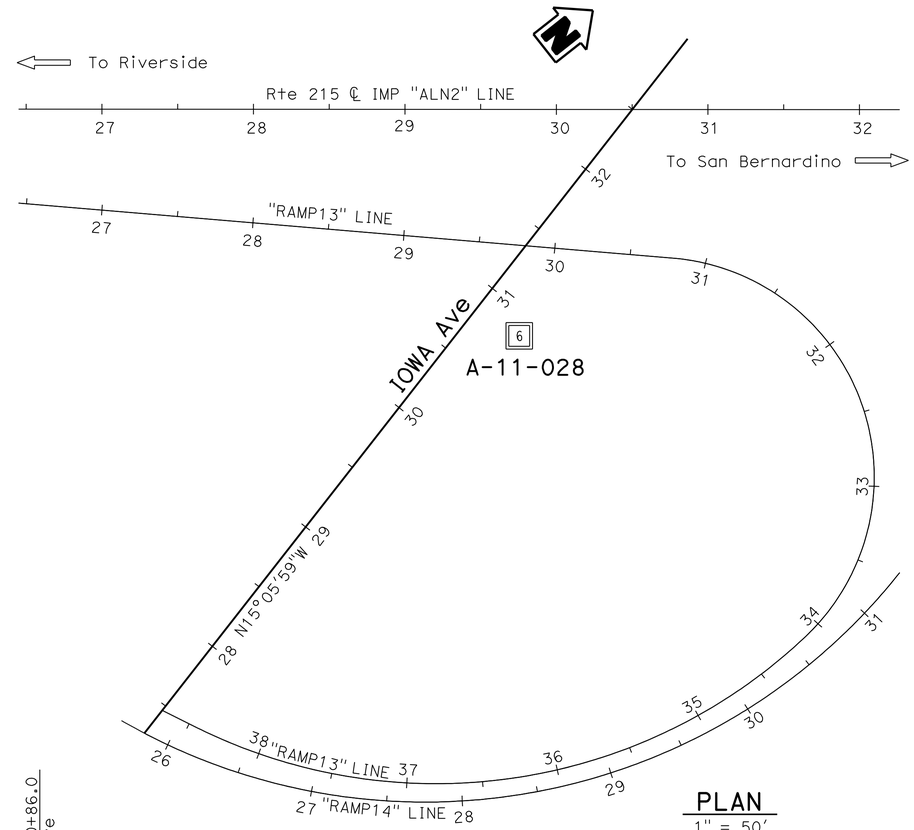

PLAN
1" = 50'

Note: No ground water encountered during field investigation.

PROFILE
Horiz: 1" = 10'
Vert: 1" = 10'

ENGINEERING SERVICES	MATERIALS AND GEOTECHNICAL SERVICES	STATE OF CALIFORNIA DEPARTMENT OF TRANSPORTATION	DIVISION OF ENGINEERING SERVICES STRUCTURE DESIGN DESIGN BRANCH 10	BRIDGE NO. 54E0041 POST MILE 0.0-5.7	IOWA AVE OC RETAINING WALL NO. 28
FUNCTIONAL SUPERVISOR NAME: S. Wei	DRAWN BY: W. Tang 11/11 CHECKED BY: B. Gutierrez	FIELD INVESTIGATION BY: M. Wilson			LOG OF TEST BORINGS 1 OF 4

OGS CIVIL LOG OF TEST BORINGS SHEET

ORIGINAL SCALE IN INCHES FOR REDUCED PLANS 0 1 2 3

UNIT: 3643
PROJECT NUMBER & PHASE: 08000005061 CONTRACT NO.: 08-0M9401

DISREGARD PRINTS BEARING EARLIER REVISION DATES 11-03-11 12-19-11 SHEET 9 OF 12

FILE => 54e0041zlotb09.dgn

USERNAME => s121614 DATE PLOTTED => 18-APR-2012 TIME PLOTTED => 17:24

REFERENCE: CALTRANS SOIL & ROCK LOGGING, CLASSIFICATION, AND PRESENTATION MANUAL (2010)

DIST	COUNTY	ROUTE	POST MILES TOTAL PROJECT	SHEET No	TOTAL SHEETS
08	Riv,SBd	91,215	21.5/21.7, 43.2/45.2,0.0/5.1	1220	1743

PROFESSIONAL GEOLOGIST 12-21-11

4-16-12
PLANS APPROVAL DATE

PROFESSIONAL GEOLOGIST Mark Wilson No. 8164 Exp. 06-30-12 STATE OF CALIFORNIA

The State of California or its officers or agents shall not be responsible for the accuracy or completeness of electronic copies of this plan sheet.

CEMENTATION

Description	Criteria
Weak	Crumbles or breaks with handling or little finger pressure.
Moderate	Crumbles or breaks with considerable finger pressure.
Strong	Will not crumble or break with finger pressure.

BOREHOLE IDENTIFICATION

Symbol	Hole Type	Description
Size	A	Auger Boring (hollow or solid stem bucket)
Size	R RW RC P	Rotary drilled boring (conventional) Rotary drilled with self-casing wire-line Rotary core with continuously-sampled, self-casing wire-line Rotary percussion boring (air)
Size	R RC	Rotary drilled diamond core Rotary drilled rock core
Size	HD HA	Hand driven (1-inch soil tube) Hand Auger
●	D	Dynamic Cone Penetration Boring
▲	CPT	Cone Penetration Test (ASTM D 5778)
⬚	O	Other (note on LOTB)

Note: Size in inches.

CONSISTENCY OF COHESIVE SOILS

Description	Shear Strength (tsf)	Pocket Penetrometer Measurement, PP, (tsf)	Torvane Measurement, TV, (tsf)	Vane Shear Measurement, VS, (tsf)
Very Soft	Less than 0.12	Less than 0.25	Less than 0.12	Less than 0.12
Soft	0.12 - 0.25	0.25 - 0.5	0.12 - 0.25	0.12 - 0.25
Medium Stiff	0.25 - 0.5	0.5 - 1	0.25 - 0.5	0.25 - 0.5
Stiff	0.5 - 1	1 - 2	0.5 - 1	0.5 - 1
Very Stiff	1 - 2	2 - 4	1 - 2	1 - 2
Hard	Greater than 2	Greater than 4	Greater than 2	Greater than 2

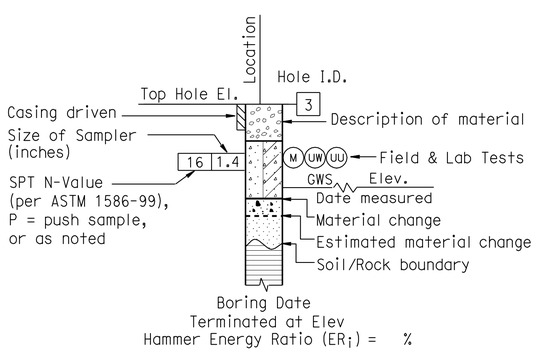

ROTARY BORING

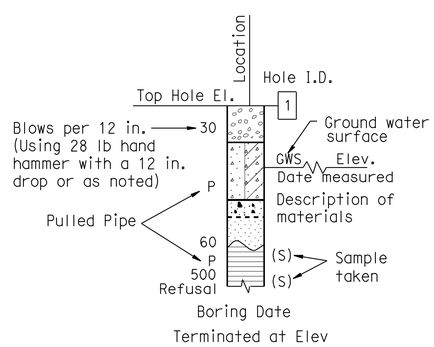

HAND BORING

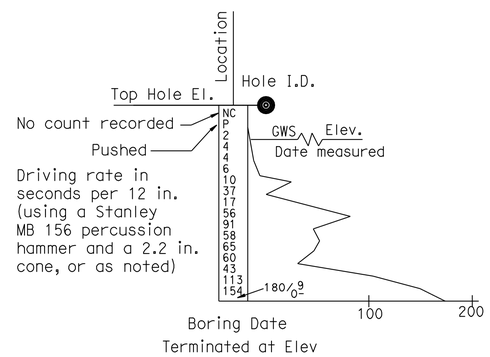

DYNAMIC CONE PENETRATION BORING

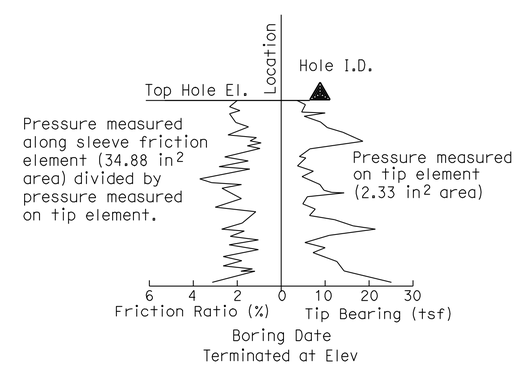

CONE PENETRATION TEST (CPT) BORING

ENGINEERING SERVICES	MATERIALS AND GEOTECHNICAL SERVICES	STATE OF CALIFORNIA DEPARTMENT OF TRANSPORTATION	DIVISION OF ENGINEERING SERVICES STRUCTURE DESIGN DESIGN BRANCH 10	BRIDGE NO. 54E0041 POST MILE 0.0-5.7	IOWA AVE OC RETAINING WALL NO. 28
	PREPARED BY: W. Tang 11/11				LOG OF TEST BORINGS 2 OF 4

GS LOTB SOIL LEGEND

ORIGINAL SCALE IN INCHES FOR REDUCED PLANS 0 1 2 3

UNIT: 3643
PROJECT NUMBER & PHASE: 08000005061 CONTRACT NO.: 08-0M9401

DISREGARD PRINTS BEARING EARLIER REVISION DATES → 12-30-11

REVISION DATES | SHEET 10 | OF 12

FILE => 54e0041zlotb10.dgn

USERNAME => s121614 DATE PLOTTED => 18-APR-2012 TIME PLOTTED => 17:24

REFERENCE: CALTRANS SOIL & ROCK LOGGING, CLASSIFICATION, AND PRESENTATION MANUAL (2010)

DIST	COUNTY	ROUTE	POST MILES TOTAL PROJECT	SHEET No	TOTAL SHEETS
08	Riv,SBd	91,215	21.5/21.7, 43.2/45.2,0.0/5.1	1221	1743

PROFESSIONAL GEOLOGIST 12-21-11

4-16-12
PLANS APPROVAL DATE

PROFESSIONAL GEOLOGIST Mark Wilson No. 8164 Exp. 06-30-12 STATE OF CALIFORNIA

The State of California or its officers or agents shall not be responsible for the accuracy or completeness of electronic copies of this plan sheet.

GROUP SYMBOLS AND NAMES

Graphic/Symbol	Group Names	Graphic/Symbol	Group Names
GW	Well-graded GRAVEL Well-graded GRAVEL with SAND	CL	Lean CLAY Lean CLAY with SAND Lean CLAY with GRAVEL SANDY lean CLAY SANDY lean CLAY with GRAVEL GRAVELLY lean CLAY GRAVELLY lean CLAY with SAND
GP	Poorly-graded GRAVEL Poorly-graded GRAVEL with SAND		
GW-GM	Well-graded GRAVEL with SILT Well-graded GRAVEL with SILT and SAND	CL-ML	SILTY CLAY SILTY CLAY with SAND SILTY CLAY with GRAVEL SANDY SILTY CLAY SANDY SILTY CLAY with GRAVEL GRAVELLY SILTY CLAY GRAVELLY SILTY CLAY with SAND
GW-GC	Well-graded GRAVEL with CLAY (or SILTY CLAY) Well-graded GRAVEL with CLAY and SAND (or SILTY CLAY and SAND)		
GP-GM	Poorly-graded GRAVEL with SILT Poorly-graded GRAVEL with SILT and SAND	ML	SILT SILT with SAND SILT with GRAVEL SANDY SILT SANDY SILT with GRAVEL GRAVELLY SILT GRAVELLY SILT with SAND
GP-GC	Poorly-graded GRAVEL with CLAY (or SILTY CLAY) Poorly-graded GRAVEL with CLAY and SAND (or SILTY CLAY and SAND)		
GM	SILTY GRAVEL SILTY GRAVEL with SAND	OL	ORGANIC lean CLAY ORGANIC lean CLAY with SAND ORGANIC lean CLAY with GRAVEL SANDY ORGANIC lean CLAY SANDY ORGANIC lean CLAY with GRAVEL GRAVELLY ORGANIC lean CLAY GRAVELLY ORGANIC lean CLAY with SAND
GC	CLAYEY GRAVEL CLAYEY GRAVEL with SAND		
GC-GM	SILTY, CLAYEY GRAVEL SILTY, CLAYEY GRAVEL with SAND	OL	ORGANIC SILT ORGANIC SILT with SAND ORGANIC SILT with GRAVEL SANDY ORGANIC SILT SANDY ORGANIC SILT with GRAVEL GRAVELLY ORGANIC SILT GRAVELLY ORGANIC SILT with SAND
SW	Well-graded SAND Well-graded SAND with GRAVEL		
SP	Poorly-graded SAND Poorly-graded SAND with GRAVEL	CH	Fat CLAY Fat CLAY with SAND Fat CLAY with GRAVEL SANDY fat CLAY SANDY fat CLAY with GRAVEL GRAVELLY fat CLAY GRAVELLY fat CLAY with SAND
SW-SM	Well-graded SAND with SILT Well-graded SAND with SILT and GRAVEL		
SW-SC	Well-graded SAND with CLAY (or SILTY CLAY) Well-graded SAND with CLAY and GRAVEL (or SILTY CLAY and GRAVEL)	MH	Elastic SILT Elastic SILT with SAND Elastic SILT with GRAVEL SANDY elastic SILT SANDY elastic SILT with GRAVEL GRAVELLY elastic SILT GRAVELLY elastic SILT with SAND
SP-SM	Poorly-graded SAND with SILT Poorly-graded SAND with SILT and GRAVEL		
SP-SC	Poorly-graded SAND with CLAY (or SILTY CLAY) Poorly-graded SAND with CLAY and GRAVEL (or SILTY CLAY and GRAVEL)	OH	ORGANIC fat CLAY ORGANIC fat CLAY with SAND ORGANIC fat CLAY with GRAVEL SANDY ORGANIC fat CLAY SANDY ORGANIC fat CLAY with GRAVEL GRAVELLY ORGANIC fat CLAY GRAVELLY ORGANIC fat CLAY with SAND
SM	SILTY SAND SILTY SAND with GRAVEL		
SC	CLAYEY SAND CLAYEY SAND with GRAVEL	OH	ORGANIC elastic SILT ORGANIC elastic SILT with SAND ORGANIC elastic SILT with GRAVEL SANDY ORGANIC elastic SILT SANDY ORGANIC elastic SILT with GRAVEL GRAVELLY ORGANIC elastic SILT GRAVELLY ORGANIC elastic SILT with SAND
SC-SM	SILTY, CLAYEY SAND SILTY, CLAYEY SAND with GRAVEL		
PT	PEAT	OL/OH	ORGANIC SOIL ORGANIC SOIL with SAND ORGANIC SOIL with GRAVEL SANDY ORGANIC SOIL SANDY ORGANIC SOIL with GRAVEL GRAVELLY ORGANIC SOIL GRAVELLY ORGANIC SOIL with SAND
	COBBLES COBBLES and BOULDERS BOULDERS		

FIELD AND LABORATORY TESTING

- (C) Consolidation (ASTM D 2435)
- (CL) Collapse Potential (ASTM D 5333)
- (CP) Compaction Curve (CTM 216)
- (CR) Corrosivity Testing (CTM 643, CTM 422, CTM 417)
- (CU) Consolidated Undrained Triaxial (ASTM D 4767)
- (DS) Direct Shear (ASTM D 3080)
- (EI) Expansion Index (ASTM D 4829)
- (M) Moisture Content (ASTM D 2216)
- (OC) Organic Content-% (ASTM D 2974)
- (P) Permeability (CTM 220)
- (PA) Particle Size Analysis (ASTM D 422)
- (PI) Plasticity Index (AASHTO T 90) Liquid Limit (AASHTO T 89)
- (PL) Point Load Index (ASTM D 5731)
- (PM) Pressure Meter
- (R) R-Value (CTM 301)
- (SE) Sand Equivalent (CTM 217)
- (SG) Specific Gravity (AASHTO T 100)
- (SL) Shrinkage Limit (ASTM D 427)
- (SW) Swell Potential (ASTM D 4546)
- (UC) Unconfined Compression-Soil (ASTM D 2166) Unconfined Compression-Rock (ASTM D 2938)
- (UU) Unconsolidated Undrained Triaxial (ASTM D 2850)
- (UW) Unit Weight (ASTM D 4767)

APPARENT DENSITY OF COHESIONLESS SOILS

Description	SPT N_{60} (Blows / 12 in.)
Very Loose	0 - 5
Loose	5 - 10
Medium Dense	10 - 30
Dense	30 - 50
Very Dense	Greater than 50

MOISTURE

Description	Criteria
Dry	No discernable moisture
Moist	Moisture present, but no free water
Wet	Visible free water

PERCENT OR PROPORTION OF SOILS

Description	Criteria
Trace	Particles are present but estimated to be less than 5%
Few	5% - 10%
Little	15% - 25%
Some	30% - 45%
Mostly	50% - 100%

PARTICLE SIZE

Description		Size (in.)
Boulder		Greater than 12
Cobble		3 - 12
Gravel	Coarse	3/4 - 3
	Fine	1/5 - 3/4
Sand	Coarse	1/16 - 1/5
	Medium	1/64 - 1/16
	Fine	1/300 - 1/64
Silt and Clay		Less than 1/300

ENGINEERING SERVICES

MATERIALS AND GEOTECHNICAL SERVICES

PREPARED BY: W. Tang 11/11

STATE OF CALIFORNIA DEPARTMENT OF TRANSPORTATION

DIVISION OF ENGINEERING SERVICES STRUCTURE DESIGN DESIGN BRANCH 10

BRIDGE NO. 54E0041

POST MILE 0.0-5.7

IOWA AVE OC RETAINING WALL NO. 28

LOG OF TEST BORINGS 3 OF 4

GS LOTB SOIL LEGEND

ORIGINAL SCALE IN INCHES FOR REDUCED PLANS 0 1 2 3

UNIT: 3643
PROJECT NUMBER & PHASE: 08000005061 CONTRACT NO.: 08-0M9401

DISREGARD PRINTS BEARING EARLIER REVISION DATES

REVISION DATES 12-30-11

SHEET 11 OF 12

FILE => 54e0041zlotb11.dgn

USERNAME => s121614 DATE PLOTTED => 18-APR-2012 TIME PLOTTED => 17:24

FED. ROAD DIV. No.	STATE	PROJ. No.	FISCAL YEAR	SHEET No.	TOTAL SHEETS
7	CAL.				

DIST.	COUNTY	ROUTE	SECTION	SHEET No.	TOTAL SHEETS
VIII	SBd	43	F		11

BRIDGE ENGINEER — CIVIL AND STRUCTURAL ENGINEER — HONOR ENGR.

DATE APPROVED

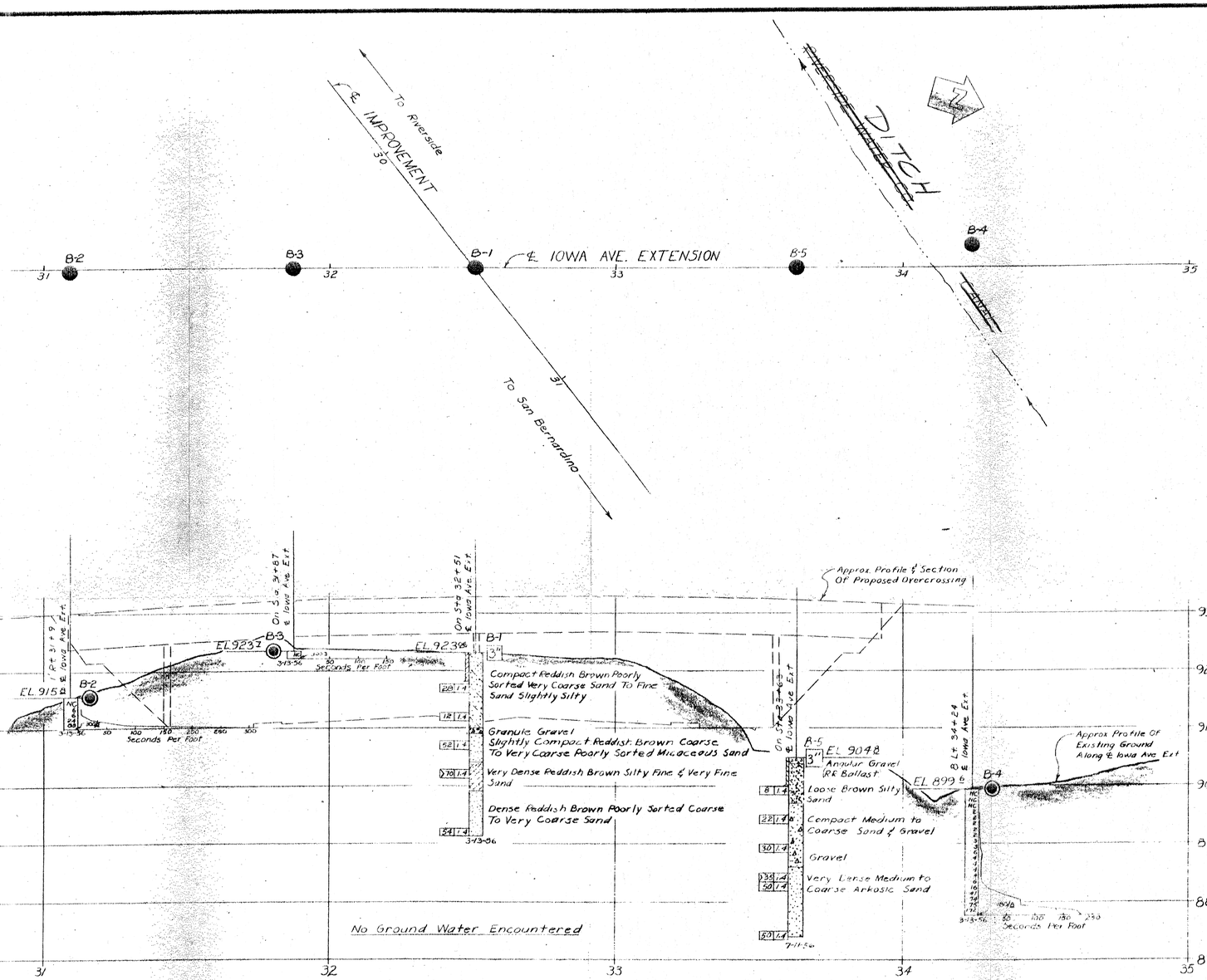

To accompany plans dated 4-16-12

DIVISION OF ENGINEERING SERVICES - MATERIALS AND GEOTECHNICAL SERVICES

As-built Log of Test Borings sheet is considered an informational document only. As such, the State of California registration seal with signature, license number and registration certificate expiration date confirm that this is a true and accurate copy of the original document. It does not attest to the accuracy or validity of the information contained in the original document. This drawing is available and presented only for the convenience of any bidder, contractor or other interested party.

DIST.	COUNTY	ROUTE	POST MILE-TOTAL PROJECT	Sheet No.	Total Sheets
08	Riv,SBd	91,215	21.5/21.7,43.2/45.2,0.0/5.1	222	1743

PROFESSIONAL GEOLOGIST — DATE 12/21/11

PROFESSIONAL GEOLOGIST — Mark Wilson — No. 8164 — Exp. 06-30-12 — STATE OF CALIFORNIA

RETAINING WALL 28

LOG OF TEST BORINGS 4 OF 4

UNIT: 3643	CONTRACT No.	BRIDGE No.
PROJ. No. & PHASE: 08000005061	08-0M9401	
AS-BUILT VERT DATUM: xx CONVERSION: xx	Sheet	of
NOTE: A COPY OF THIS LOG OF TEST BORINGS IS AVAILABLE AT OFFICE OF STRUCTURE MAINTENANCE AND INVESTIGATIONS, SACRAMENTO, CALIFORNIA	11	11

BM USGS Elev 933.62 P 449 1949 Std Brass Disc 0.7 Mi. N. Along The AT & SF RR From Highgrove In W'ly Hd. wall Of PCC Culert Or Canal

ASSIFICATION OF MATERIAL BASED ON STANDARD GRADE SIZE LIMITS

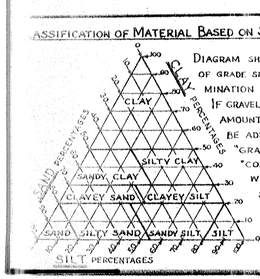

DIAGRAM SHOWING THE BASIS FOR ESTIMATES OF GRADE SIZE DISTRIBUTION USED IN DETERMINATION OF CLASS NAMES.

IF GRAVEL IS PRESENT IN APPRECIABLE AMOUNTS THE TERM "GRAVELLY" MAY BE ADDED TO THE CLASS NAME, VIZ. "GRAVELLY SAND". THE TERMS "COARSE", "MEDIUM" AND "FINE" WHEN USED TO DESCRIBE SAND, SILT AND GRAVEL REFER TO STANDARD GRADE SIZE LIMITS.

LEGEND OF EARTH MATERIALS

- GRAVEL
- SAND
- SILT
- CLAY
- SANDY CLAY OR CLAYEY SAND
- SANDY SILT OR SILTY SAND
- SILTY CLAY OR CLAYEY SILT
- PEAT AND/OR ORGANIC MATTER
- FILL MATERIAL
- IGNEOUS ROCK
- SEDIMENTARY ROCK
- METAMORPHIC ROCK

LEGEND OF BORING OPERATIONS

- PLAN OF ANY BORING
- PENETROMETER
- 2¼" CONE PENETROMETER
- SAMPLER BORING (DRY)
- ROTARY BORING (WET)
- AUGER BORING (DRY)
- JET BORING
- CORE BORING
- TEST PIT

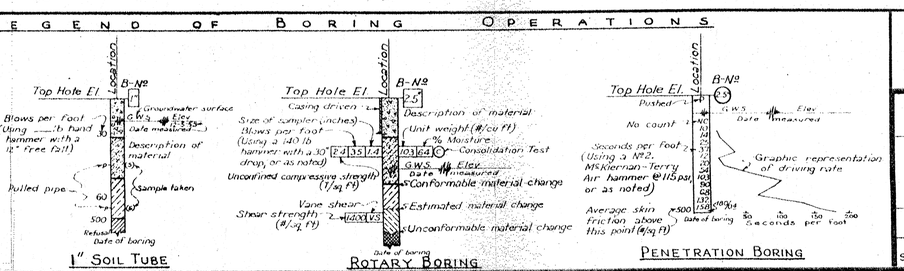

NOTES

The contractor's attention is directed to Section 2, Article (c) of the Standard Specifications and to the Special Provisions accompanying this set of plans.

Classification of earth material as shown on this sheet is based upon field inspection and is not to be construed to imply mechanical analysis.

STATE OF CALIFORNIA
DEPARTMENT OF PUBLIC WORKS
DIVISION OF HIGHWAYS

IOWA AVE. OVERCROSSING

LOG OF TEST BORINGS

SCALE VERT 1"=20' HORIZ 1"=10'	BRIDGE 54-527	FILE	DRAWING

DIST	COUNTY	ROUTE	POST MILES TOTAL PROJECT	SHEET No.	TOTAL SHEETS
08	Riv,SBd	91,215	21.5/21.7, 43.2/45.2,0.0/5.1	1223	1743

REGISTERED CIVIL ENGINEER — DATE 4-06-12

4-16-12
PLANS APPROVAL DATE

REGISTERED PROFESSIONAL ENGINEER — LARRY WU No. C57035 Exp. 6-30-13 CIVIL — STATE OF CALIFORNIA

The State of California or its officers or agents shall not be responsible for the accuracy or completeness of electronic copies of this plan sheet.

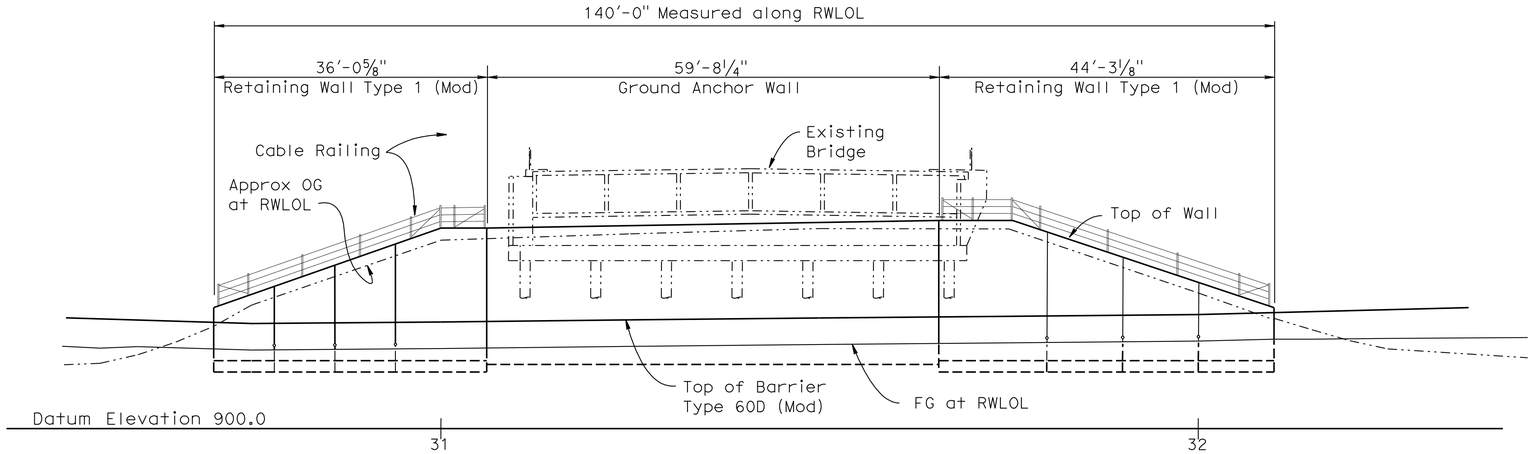

ELEVATION

1" = 10'

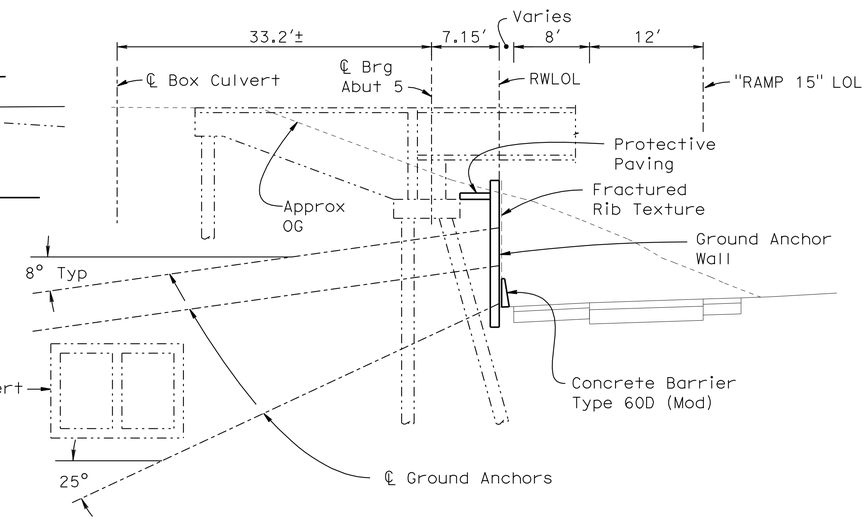

TYPICAL SECTION

1/8" = 1'-0"

Sta 31+06.05 to Sta 31+65.74

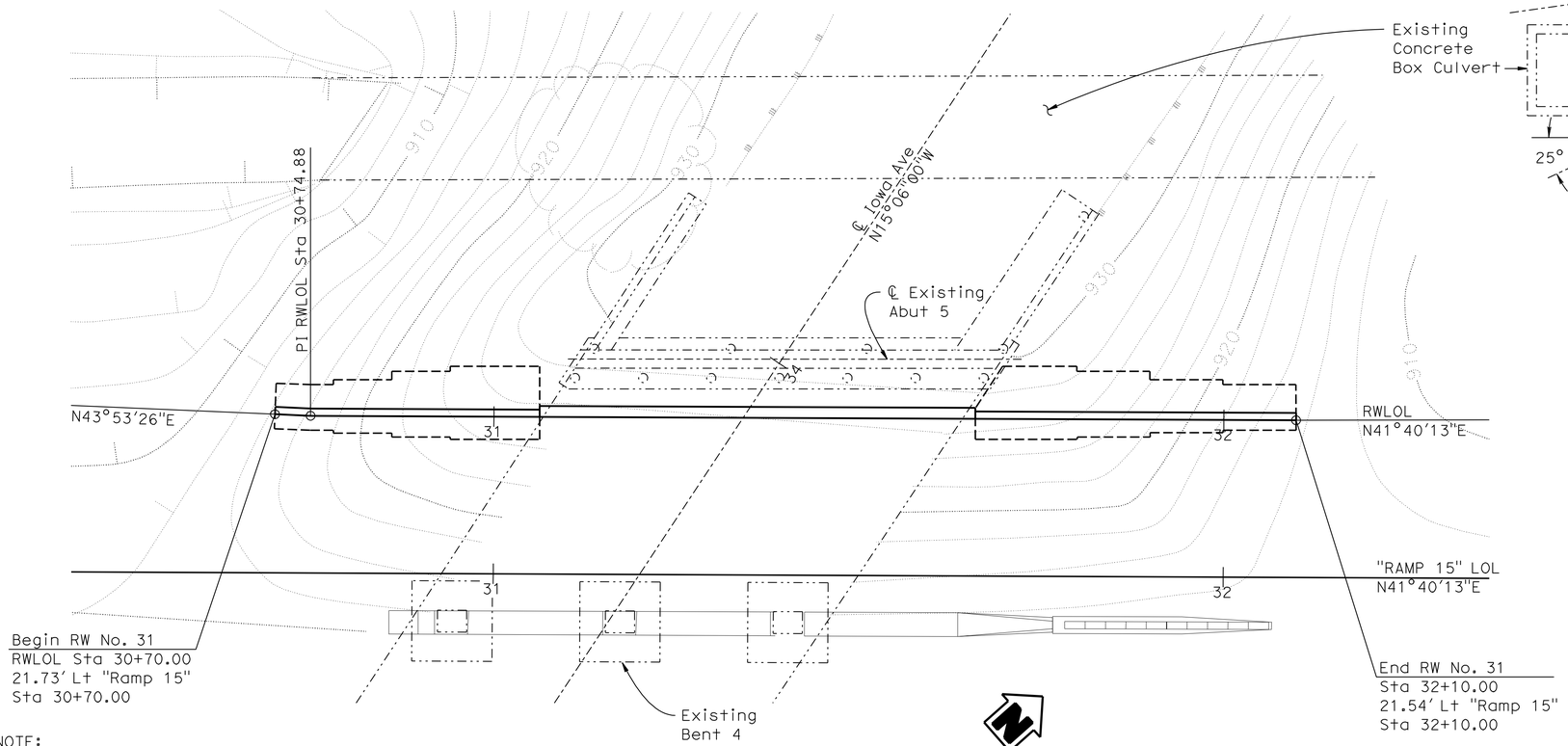

GENERAL PLAN

1" = 10'

NOTE:
THE CONTRACTOR SHALL VERIFY ALL CONTROLLING FIELD DIMENSIONS BEFORE ORDERING OR FABRICATING ANY MATERIAL.

NOTE:
For Index to Plans, General Notes and Quantities see "INDEX TO PLANS" sheet.

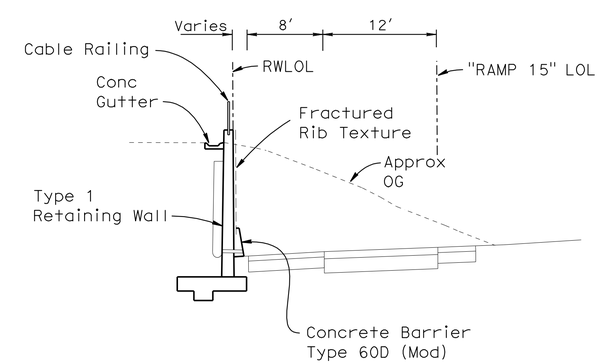

TYPICAL SECTION

1/8" = 1'-0"

Sta 30+70.00 to Sta 31+06.05 and Sta 31+65.74 to Sta 32+10.00

DANIEL T. ADAMS
DESIGN ENGINEER

	BY	CHECKED
DESIGN	T Sanderson	H. Vu
DETAILS	R. Kirkland	H. Vu
QUANTITIES	D. Azzam	J. DeLatorre

LOAD & RESISTANCE FACTOR DESIGN — LIVE LOADING: HL93 W/"LOW-BOY"; PERMIT DESIGN VEHICLE

	BY	CHECKED
LAYOUT	T. Sanderson	H. Vu
SPECIFICATIONS	J. Corrado	PLANS AND SPECS COMPARED J. Corrado

ORIGINAL SCALE IN INCHES FOR REDUCED PLANS 0 1 2 3

STATE OF CALIFORNIA
DEPARTMENT OF TRANSPORTATION

DIVISION OF ENGINEERING SERVICES
STRUCTURE DESIGN
DESIGN BRANCH 10

BRIDGE NO. 54E0042
POST MILE 0.4

IOWA AVE OC RETAINING WALL NO. 31
GENERAL PLAN

UNIT: 3589
PROJECT NUMBER & PHASE: 08000005061
CONTRACT NO.: 08-0m9401

DISREGARD PRINTS BEARING EARLIER REVISION DATES

REVISION DATES: 11-10-11, 12-30-11, 3-07-12

SHEET 1 OF 10

USERNAME => s121614 DATE PLOTTED => 18-APR-2012 TIME PLOTTED => 17:25

STRUCTURES DESIGN GENERAL PLAN SHEET (ENGLISH) (REV.09-01-10)

FILE => 54e0042agp01.dgn

DIST	COUNTY	ROUTE	POST MILES TOTAL PROJECT	SHEET No.	TOTAL SHEETS
08	Riv,SBd	91,215	21.5/21.7, 43.2/45.2,0.0/5.1	1224	1743

REGISTERED CIVIL ENGINEER — DATE 4-06-12

4-16-12
PLANS APPROVAL DATE

REGISTERED PROFESSIONAL ENGINEER — LARRY WU — No. C57035 — Exp. 6-30-13 — CIVIL — STATE OF CALIFORNIA

The State of California or its officers or agents shall not be responsible for the accuracy or completeness of electronic copies of this plan sheet.

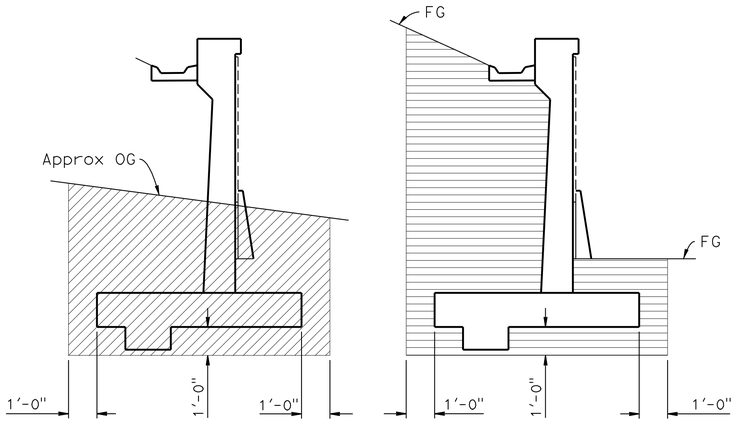

LIMITS OF PAYMENT FOR EXCAVATION & BACKFILL (RETAINING WALL)

NO SCALE

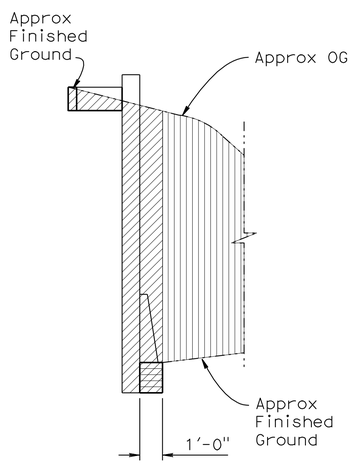

LIMITS OF PAYMENT FOR EXCAVATION & BACKFILL (GROUND ANCHOR WALL)

NO SCALE

LEGEND:

- Structure Excavation (Retaining Wall)
- Structure Backfill (Retaining Wall)
- Roadway Excavation (see Road Plans)

GENERAL NOTES

DESIGN: AASHTO LRFD Bridge Design Specifications 4th Edition with California Amendments, Preface dated Sept. 2010

SOIL PARAMETERS: $\phi = 34°$, $\gamma = 124$ pcf

LIVE LOAD: Surcharge = 2 ft level earth

REINFORCED CONCRETE: $f_y = 60$ ksi (Yeild strength of reinforcement)
$f_c = 4.0$ ksi (Concrete compressive strength at 28 days)

SHOTCRETE: $f_c = 4.0$ ksi
$f_y = 60$ ksi

PRESTRESSINIG STEEL: (GROUND ANCHOR)
Bars - ASTM Designation: A722 Type II (150 ksi)
Strand Tendons-ASTM Designation: A416 (270 Ksi Low Relaxation steel)

First Level FTL = 40 kips
Second Level FTL = 50 kips
Third Level FTL = 45 kips

FTL = Factored Test Load per anchor (kips)

fpu = Minimum tensile strength of prestressing steel

As = Minimum cross sectional area of prestressing steel in ground anchor (square inch)

$$As(Min) = \frac{1.0\ FTL}{0.75\ fpu} \quad \text{(Strands)}$$

$$As(Min) = \frac{1.0\ FTL}{0.80\ fpu} \quad \text{(Bars)}$$

STRUCTURAL STEEL: ASTM Designation A709 Grade 36
fy = 36 ksi

QUANTITIES

STRUCTURE EXCAVATION (RETAINING WALL)	430	CY
STRUCTURE EXCAVATION (GROUND ANCHOR WALL)	104	CY
STRUCTURE BACKFILL (RETAINING WALL)	193	CY
STRUCTURE BACKFILL (GROUND ANCHOR WALL)	8	CY
PERVIOUS BACKFILL MATERIAL	32	CY
GROUND ANCHOR	24	EA
STRUCTURAL CONCRETE, RETAINING WALL	132	CY
FRACTURED RIB TEXTURE	1,221	SQFT
BAR REINFORCING STEEL (RETAINING WALL)	30,620	LB
SHOTCRETE	38	CY
PREPARE AND STAIN CONCRETE	1,221	SQFT
MINOR CONCRETE (GUTTER)	84	LF
CABLE RAILING	84	LF
CONCRETE BARRIER (TYPE 60D MOD)	140	LF

INDEX TO PLANS

Sheet No.	Title
1	GENERAL PLAN
2	INDEX TO PLANS
3	STRUCTURE PLAN NO. 1
4	WALL DETAILS
5	DRAINAGE DETAILS
6	SUB HORIZONTAL GROUND ANCHOR DETAILS
7	ARCHITECTURAL DETAILS
8	LOG OF TEST BORINGS 1 OF 3
9	LOG OF TEST BORINGS 2 OF 3
10	LOG OF TEST BORINGS 3 OF 3

STANDARD PLANS DATED MAY 2006

A10A	ACRONYMS AND ABBREVIATIONS (SHEET 1 OF 2)
A10B	ACRONYMS AND ABBREVIATIONS (SHEET 2 OF 2)
A10C	SYMBOLS (SHEET 1 OF 2)
A10D	SYMBOLS (SHEET 2 OF 2)
A62B	LIMITS OF PAYMENT FOR EXCAVATION AND BACKFILL BRIDGE SURCHARGE & WALL
B0-1	BRIDGE DETAILS
B0-3	BRIDGE DETAILS
B3-1	RETAINING WALL TYPE 1 H=4' THROUGH 30'
B3-8	RETAINING WALL DETAILS NO. 1
B3-9	RETAINING WALL DETAILS NO. 2
RSP B11-47	CABLE RAILING

STANDARD PLAN SHEET NO.

DETAIL NO.

NOTE:
THE CONTRACTOR SHALL VERIFY ALL CONTROLLING FIELD DIMENSIONS BEFORE ORDERING OR FABRICATING ANY MATERIAL.

	BY	CHECKED
DESIGN	T. Sanderson	H. Vu
DETAILS	R. Kirkland	H. Vu
QUANTITIES	D. Azzam	J. DeLatorre

STATE OF CALIFORNIA
DEPARTMENT OF TRANSPORTATION

DIVISION OF ENGINEERING SERVICES
STRUCTURE DESIGN
DESIGN BRANCH 10

BRIDGE NO. 54E0042
POST MILE 0.4

IOWA AVE OC RETAINING WALL NO. 31
INDEX TO PLANS

STRUCTURES DESIGN DETAIL SHEET (ENGLISH) (REV. 09-01-10)

ORIGINAL SCALE IN INCHES FOR REDUCED PLANS 0 1 2 3

UNIT: 3589
PROJECT NUMBER & PHASE: 08000005061
CONTRACT NO.: 08-0m9401

DISREGARD PRINTS BEARING EARLIER REVISION DATES → 11-10-11 12-30-11 3-28-12

SHEET 2 OF 10

FILE => 54e0042altp02.dgn

USERNAME => s124496 DATE PLOTTED => 14-JUN-2012 TIME PLOTTED => 06:16

DIST	COUNTY	ROUTE	POST MILES TOTAL PROJECT	SHEET No.	TOTAL SHEETS
08	Riv,SBd	91,215	21.5/21.7, 43.2/45.2,0.0/5.1	1225	1743

REGISTERED CIVIL ENGINEER — DATE 4-06-12

4-16-12
PLANS APPROVAL DATE

REGISTERED PROFESSIONAL ENGINEER — LARRY WU — No. C57035 — Exp. 6-30-13 — CIVIL — STATE OF CALIFORNIA

The State of California or its officers or agents shall not be responsible for the accuracy or completeness of electronic copies of this plan sheet.

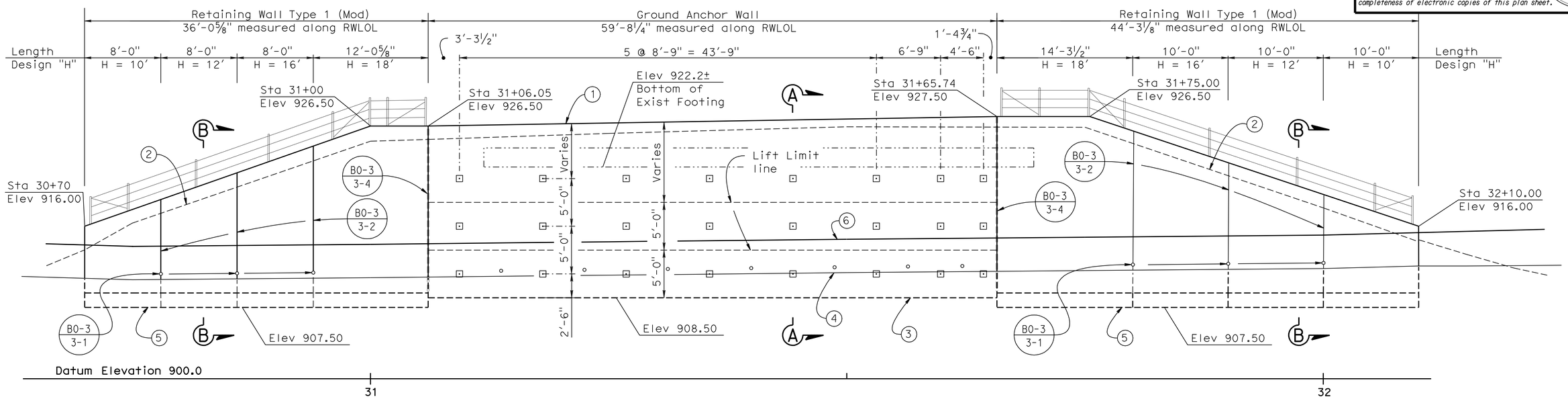

ELEVATION

3/16" = 1'-0"

LEGEND:

1. Top of Ground Anchor Wall
2. Approx Original Ground at RWLOL
3. Bottom of Ground Anchor Wall
4. Approximate Finished Grade at face of wall.
5. Bottom of Footing at Type 1 Wall
6. Top of Concrete Barrier

⊡ Indicates Ground Anchor locations

-·-·- Indicates Existing Structure

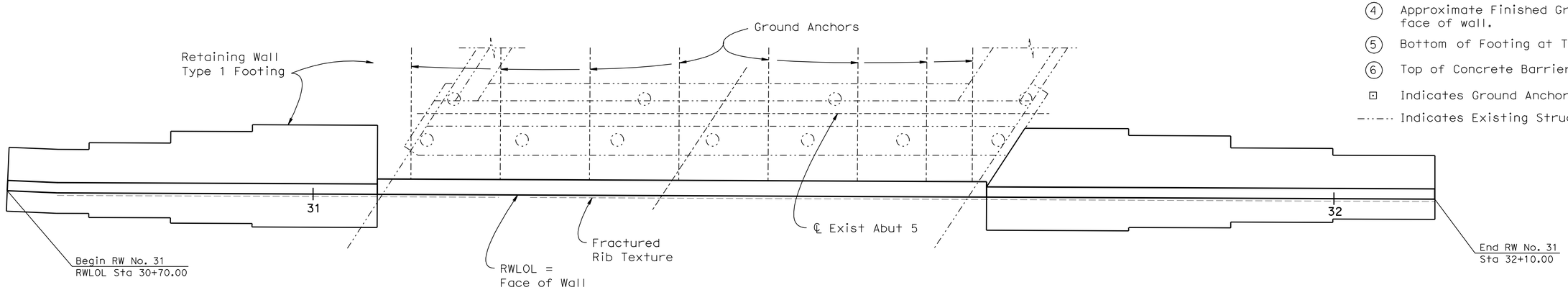

PLAN

3/16" = 1'-0"

NOTE:
THE CONTRACTOR SHALL VERIFY ALL CONTROLLING FIELD DIMENSIONS BEFORE ORDERING OR FABRICATING ANY MATERIAL.

NOTES:
1. For Section A-A and Section B-B, see "WALL DETAILS" sheet.

	BY	CHECKED
DESIGN	T. Sanderson	H. Vu
DETAILS	R. Kirkland	H. Vu
QUANTITIES	D. Azzam	J. DeLatorre

STATE OF CALIFORNIA
DEPARTMENT OF TRANSPORTATION

DIVISION OF ENGINEERING SERVICES
STRUCTURE DESIGN
DESIGN BRANCH 10

BRIDGE NO. 54E0042
POST MILE 0.4

IOWA AVE OC RETAINING WALL NO. 31
STRUCTURE PLAN

STRUCTURES DESIGN DETAIL SHEET (ENGLISH) (REV. 09-01-10)

ORIGINAL SCALE IN INCHES FOR REDUCED PLANS 0 1 2 3

UNIT: 3589
PROJECT NUMBER & PHASE: 08000005061
CONTRACT NO.: 08-0m9401

DISREGARD PRINTS BEARING EARLIER REVISION DATES

REVISION DATES: 12-30-11, 3-07-12

SHEET 3 OF 10

FILE => 54e0042csp03.dgn

USERNAME => s121614 DATE PLOTTED => 18-APR-2012 TIME PLOTTED => 17:25

DIST	COUNTY	ROUTE	POST MILES TOTAL PROJECT	SHEET No.	TOTAL SHEETS
08	Riv,SBd	91,215	21.5/21.7, 43.2/45.2,0.0/5.1	1226	1743

REGISTERED CIVIL ENGINEER 4-06-12 DATE

4-16-12
PLANS APPROVAL DATE

REGISTERED PROFESSIONAL ENGINEER LARRY WU No. C57035 Exp. 6-30-13 CIVIL STATE OF CALIFORNIA

The State of California or its officers or agents shall not be responsible for the accuracy or completeness of electronic copies of this plan sheet.

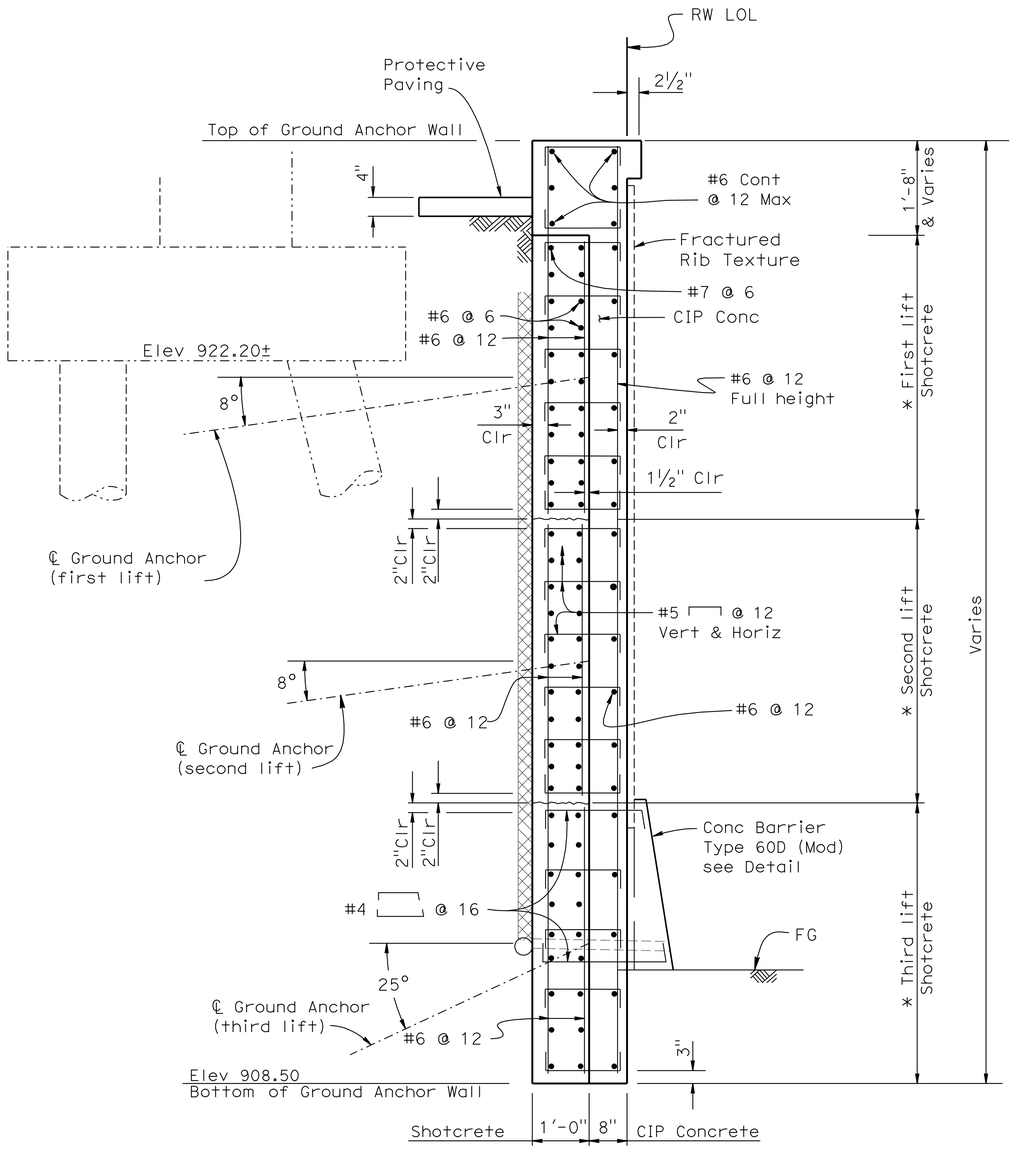

SECTION A-A

¾"=1'-0"

* For dimension see "STRUCTURE PLAN NO. 1" sheet.

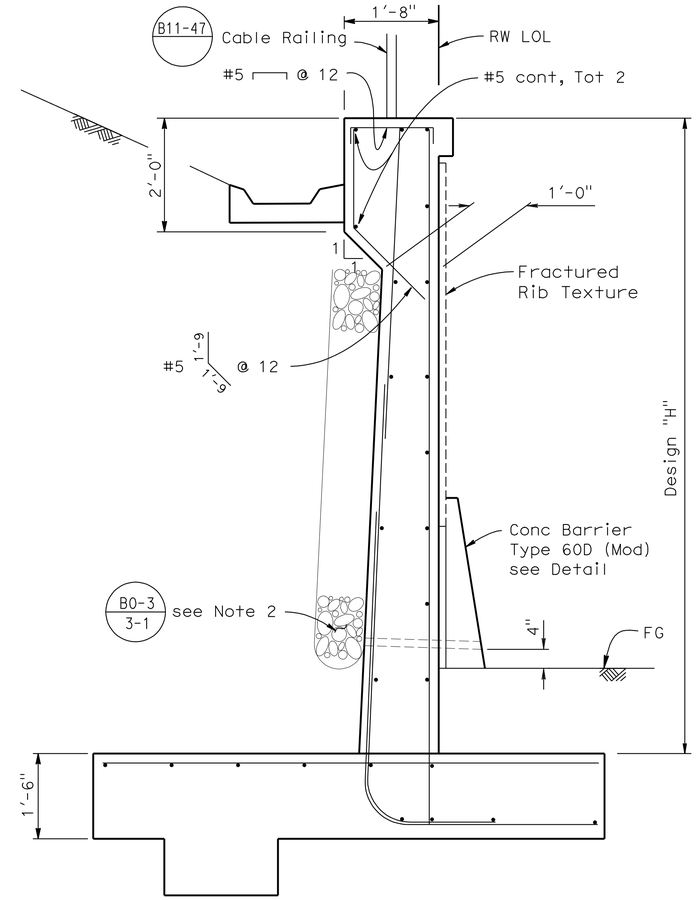

NOTE: For Details not shown see B3-1

SECTION B-B

¾" = 1'-0"

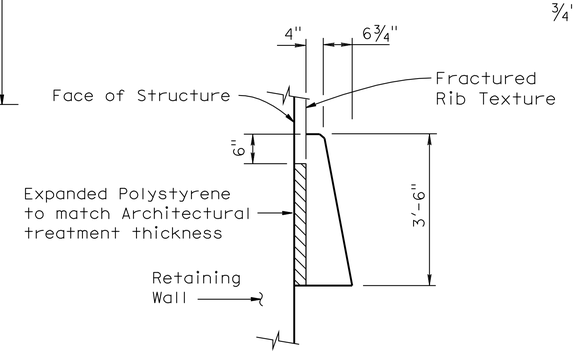

CONCRETE BARRIER TYPE 60 (MOD)

No Scale

NOTES:

1. For Horizontal & Vertical spacing of Ground Anchors see "STRUCTURE PLAN NO. 1" sheet.
2. For Alternate to B0-3 / 3-1 see "DRAINAGE DETAILS" sheet.
3. Maintain 6" min clearance between reinforcement and ℄ of Ground Anchors
4. CIP concrete to be placed after completion of all shotcrete lifts.
5. Ground Anchors shall be constructed and locked off one at a time. Start at the top and work down.
6. For Lift Limit Line, see "STRUCTURE PLAN NO.1" sheet.
7. For location of "SECTION A-A" and "SECTION B-B", see "STRUCTURE PLAN NO.1" & "STRUCTURE PLAN NO.2" sheets.

	BY	CHECKED
DESIGN	T. Sanderson	H. Vu
DETAILS	R. Kirkland	H. Vu
QUANTITIES	D. Azzam	J. DeLatorre

STATE OF CALIFORNIA DEPARTMENT OF TRANSPORTATION

DIVISION OF ENGINEERING SERVICES STRUCTURE DESIGN DESIGN BRANCH 10

BRIDGE NO. 54E0042 POST MILE 0.4

IOWA AVE OC RETAINING WALL NO. 31

WALL DETAILS

STRUCTURES DESIGN DETAIL SHEET (ENGLISH) (REV. 09-01-10)

ORIGINAL SCALE IN INCHES FOR REDUCED PLANS 0 1 2 3

UNIT: 3589
PROJECT NUMBER & PHASE: 08000005061 CONTRACT NO.: 08-0m9401

DISREGARD PRINTS BEARING EARLIER REVISION DATES

REVISION DATES 12-30-11 3-07-12

SHEET 4 OF 10

FILE => 54e0042grwdt04.dgn

USERNAME => s121614 DATE PLOTTED => 18-APR-2012 TIME PLOTTED => 17:25

DIST	COUNTY	ROUTE	POST MILES TOTAL PROJECT	SHEET No.	TOTAL SHEETS
08	Riv,SBd	91,215	21.5/21.7, 43.2/45.2,0.0/5.1	1227	1743

Larry Wu 4-06-12

4-16-12
PLANS APPROVAL DATE

REGISTERED PROFESSIONAL ENGINEER LARRY WU No. C57035 Exp. 6-30-13 CIVIL STATE OF CALIFORNIA

The State of California or its officers or agents shall not be responsible for the accuracy or completeness of electronic copies of this plan sheet.

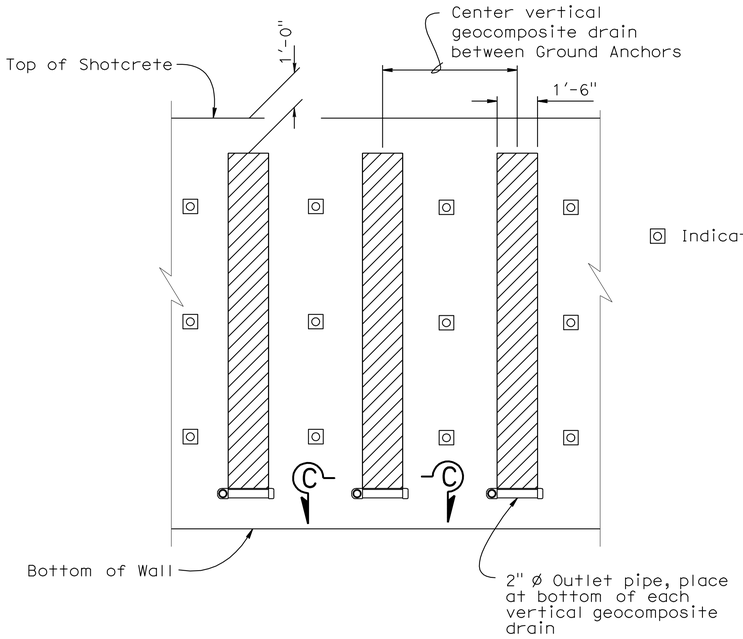

WALL PART ELEVATION

No Scale

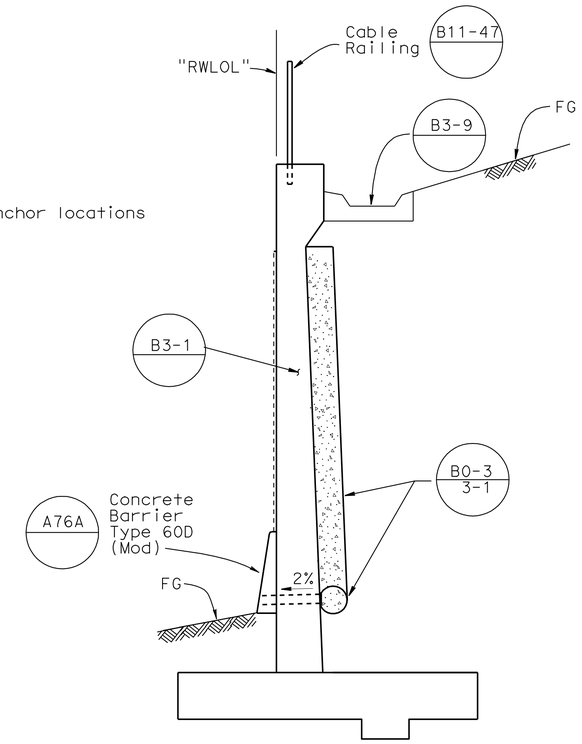

TYPICAL SECTION RETAINING WALL DRAINAGE

No Scale

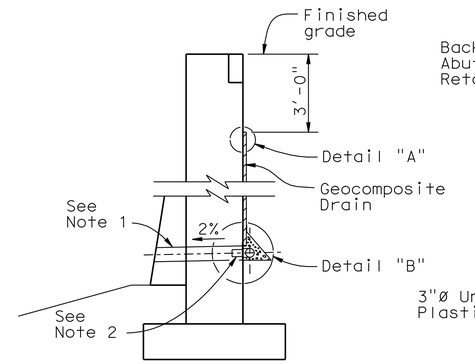

WALL SECTION

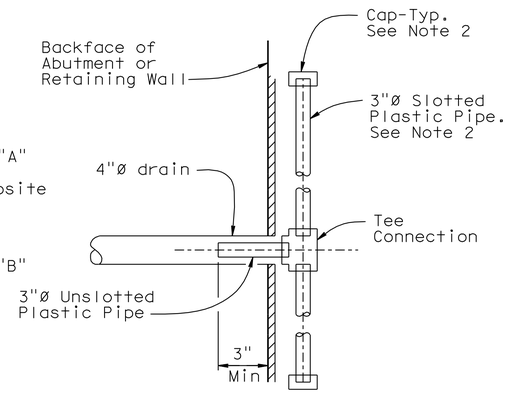

SECTION A-A

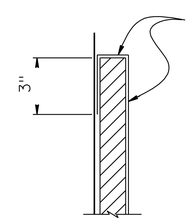

DETAIL "A"

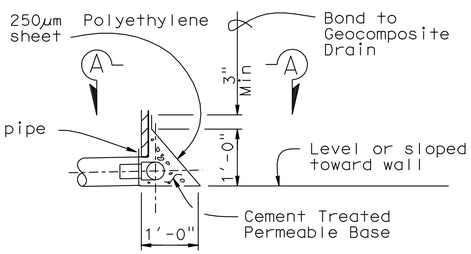

DETAIL "B"

WEEP HOLE AND GEOCOMPOSITE DRAIN

ALTERNATIVE TO BRIDGE DETAIL B0-3 / 3-1

NOTES:

1. 4"ø drains at intermediate sag points and at 25'-0" center to center. For walls adjacent to sidewalks or curbs, provide 4" cast iron or asbestos cement pipe under the sidewalk to discharge through curb face. Exposed wall drains shall be located 3"± above finished grade.
2. Geocomposite drain, cement treated permeable base, and 3"ø slotted plastic pipe continuous behind retaining wall or abutment. Cap ends of pipe. Provide "Tee" connection at each 4"ø drain.
3. Connect the low end of plastic pipe to the main outlet pipe as applicable.

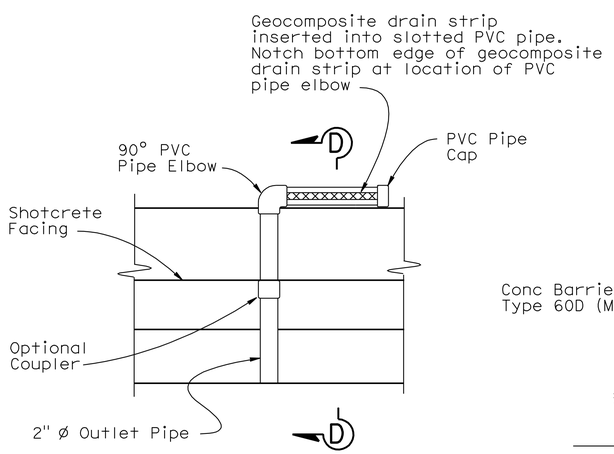

SECTION C-C

No Scale

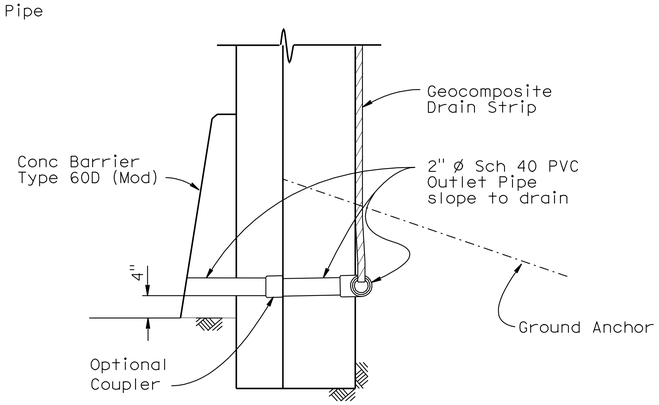

SECTION D-D

No Scale

NOTE:
THE CONTRACTOR SHALL VERIFY ALL CONTROLLING FIELD DIMENSIONS BEFORE ORDERING OR FABRICATING ANY MATERIAL.

	BY	CHECKED
DESIGN	T. Sanderson	H. Vu
DETAILS	R. Kirkland	H. Vu
QUANTITIES	D. Azzam	J. DeLatorre

STATE OF CALIFORNIA DEPARTMENT OF TRANSPORTATION

DIVISION OF ENGINEERING SERVICES STRUCTURE DESIGN DESIGN BRANCH 10

BRIDGE NO. 54E0042
POST MILE 0.4

IOWA AVE OC RETAINING WALL NO. 31

DRAINAGE DETAILS

STRUCTURES DESIGN DETAIL SHEET (ENGLISH) (REV. 09-01-10)

ORIGINAL SCALE IN INCHES FOR REDUCED PLANS 0 1 2 3

UNIT: 3589
PROJECT NUMBER & PHASE: 08000005061
CONTRACT NO.: 08-0m9401

DISREGARD PRINTS BEARING EARLIER REVISION DATES

REVISION DATES 11-04-11 12-30-11 3-07-12

SHEET 5 OF 10

FILE => 54e0042grwdt05.dgn

USERNAME => s121614 DATE PLOTTED => 18-APR-2012 TIME PLOTTED => 17:25

DIST	COUNTY	ROUTE	POST MILES TOTAL PROJECT	SHEET No.	TOTAL SHEETS
08	Riv,SBd	91,215	21.5/21.7, 43.2/45.2,0.0/5.1	1228	1743

REGISTERED CIVIL ENGINEER — DATE 4-06-12

4-16-12
PLANS APPROVAL DATE

REGISTERED PROFESSIONAL ENGINEER — LARRY WU No. C57035 Exp. 6-30-13 CIVIL — STATE OF CALIFORNIA

The State of California or its officers or agents shall not be responsible for the accuracy or completeness of electronic copies of this plan sheet.

NOTES:

(A) Level of initial grouting for drill hole 6" in diameter or smaller

(B) Level of secondary grouting

(C) Level of initial grouting inside corrugated sheathing

(D) Bonded length shall be determined by the contractor

(E) For unbonded length, see Geotech Report

(F) For inclination, see "WALL DETAILS" sheet

(G) Face of Wall Excavation

NOTES:

1. Anchorage enclosure shall only be used when anchor head assembly is not enclosed in concrete.
2. Anchorage enclosure shall have provisions to allow injecting grout at low end and venting at high end. Galvanize after fabrication.
3. Silicone sealant to cover full width of flange.
4. Steel tube (Min thickness = 1/4") welded to bearing plate. Galvanize assembly after fabrication
5. Steel tube welded to bearing plate. Inside diameter of steel tube (Min thickness = 1/4") to be 1" greater than outside diameter of smooth sheathing.
6. Galvanize assembly after fabrication.
7. For other wall details, see PROJECT PLANS.

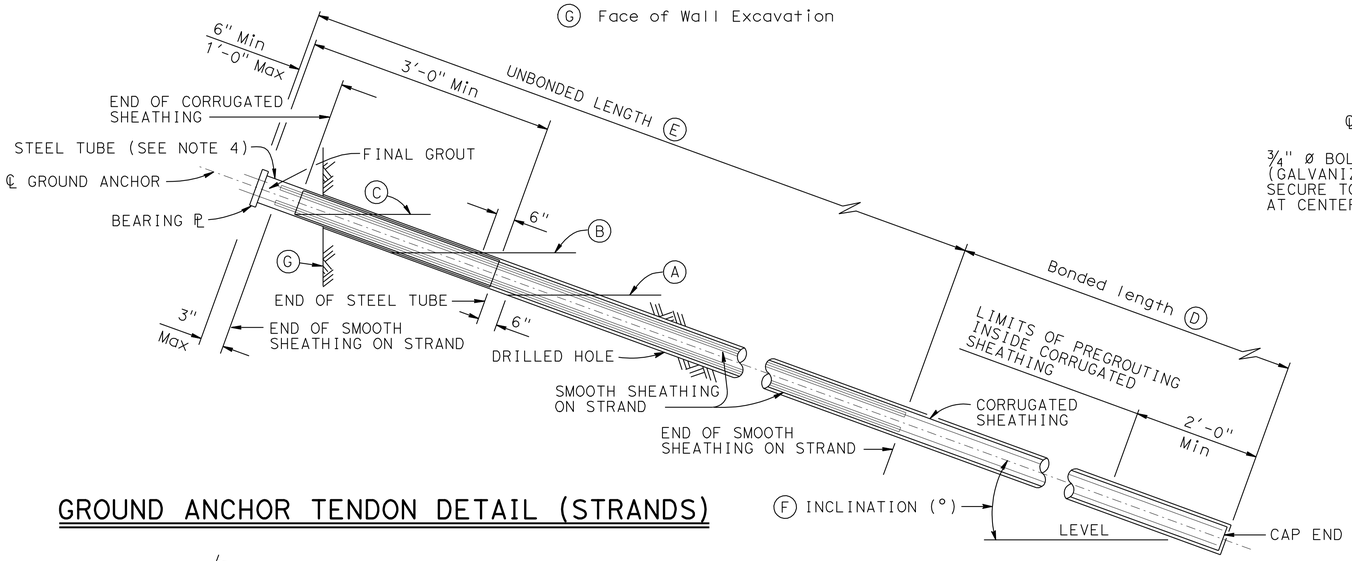

GROUND ANCHOR TENDON DETAIL (STRANDS)

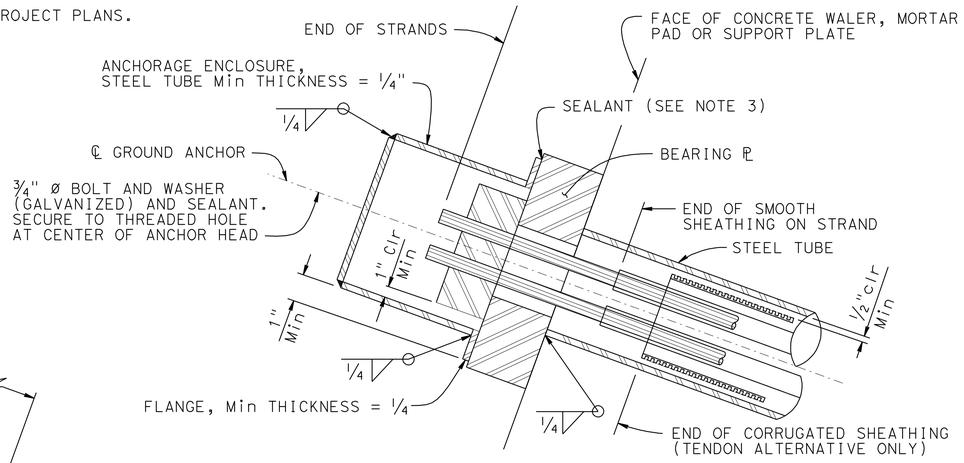

ALTERNATIVE X

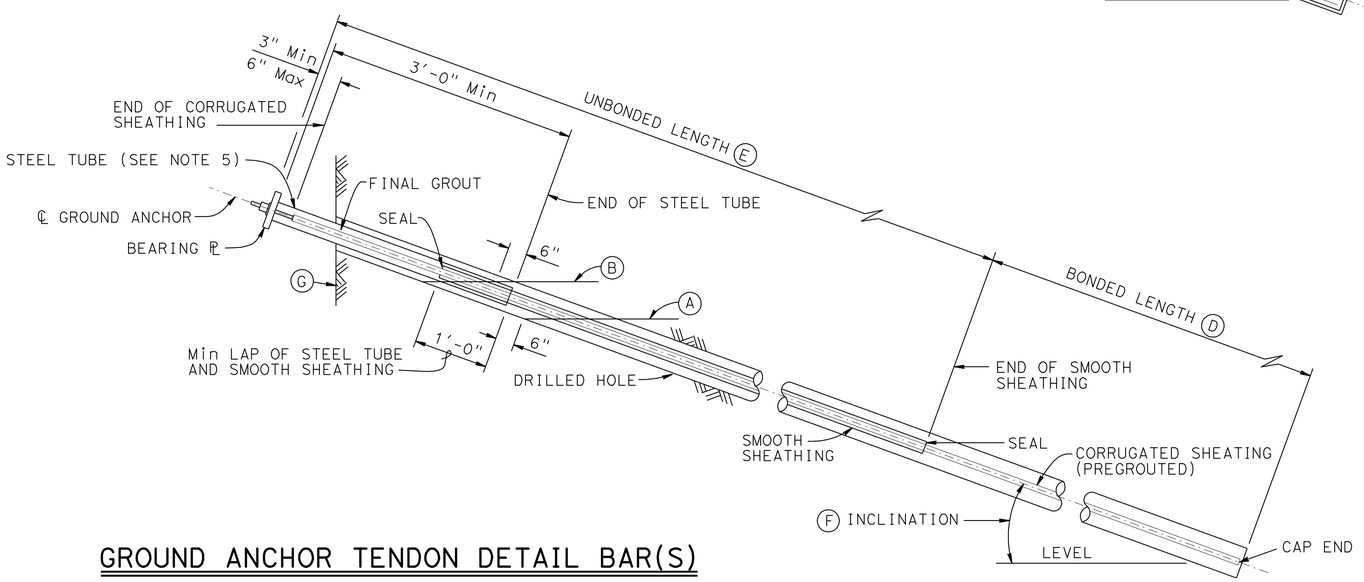

GROUND ANCHOR TENDON DETAIL BAR(S)

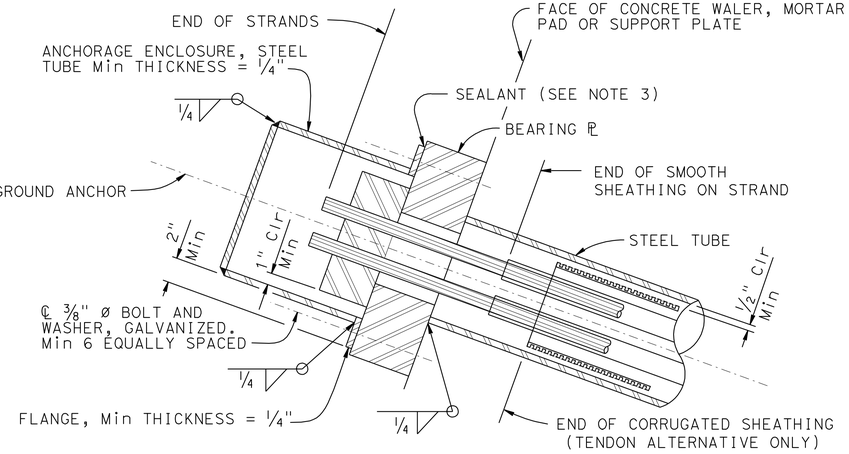

ALTERNATIVE Y

ANCHORAGE ENCLOSURE DETAILS

NO SCALE

REVISED STANDARD DRAWING		STATE OF CALIFORNIA DEPARTMENT OF TRANSPORTATION	DIVISION OF ENGINEERING SERVICES	BRIDGE NO. 54E0042	IOWA AVE OC RETAINING WALL NO. 31
FILE NO. xs12-040	APPROVAL DATE July 2011			POST MILE 0.4	SUB HORIZONTAL GROUND ANCHOR DETAILS

DS OSD 2147A (ENGLISH STANDARD DRAWING "XS" BORDER REV. (02-02-11)

ORIGINAL SCALE IN INCHES FOR REDUCED PLANS 0 1 2 3

UNIT: 3589
PROJECT NUMBER & PHASE: 08000005061
CONTRACT NO.: 08-0m9401

DISREGARD PRINTS BEARING EARLIER REVISION DATES → 12-30-11 5-07-12

SHEET 6 OF 10

FILE => 54e0042xs12-040_06.dgn

USERNAME => s121614 DATE PLOTTED => 18-APR-2012 TIME PLOTTED => 17:25

DIST	COUNTY	ROUTE	POST MILES TOTAL PROJECT	SHEET No.	TOTAL SHEETS
08	Riv,SBd	91,215	21.5/21.7, 43.2/45.2,0.0/5.1	1229	1743

LICENSED LANDSCAPE ARCHITECT 3-29-12 DATE

4-16-12
PLANS APPROVAL DATE

LICENSED LANDSCAPE ARCHITECT
RAY DESSELLE
No. 2916
Exp. 11-30-13
STATE OF CALIFORNIA

The State of California or its officers or agents shall not be responsible for the accuracy or completeness of electronic copies of this plan sheet.

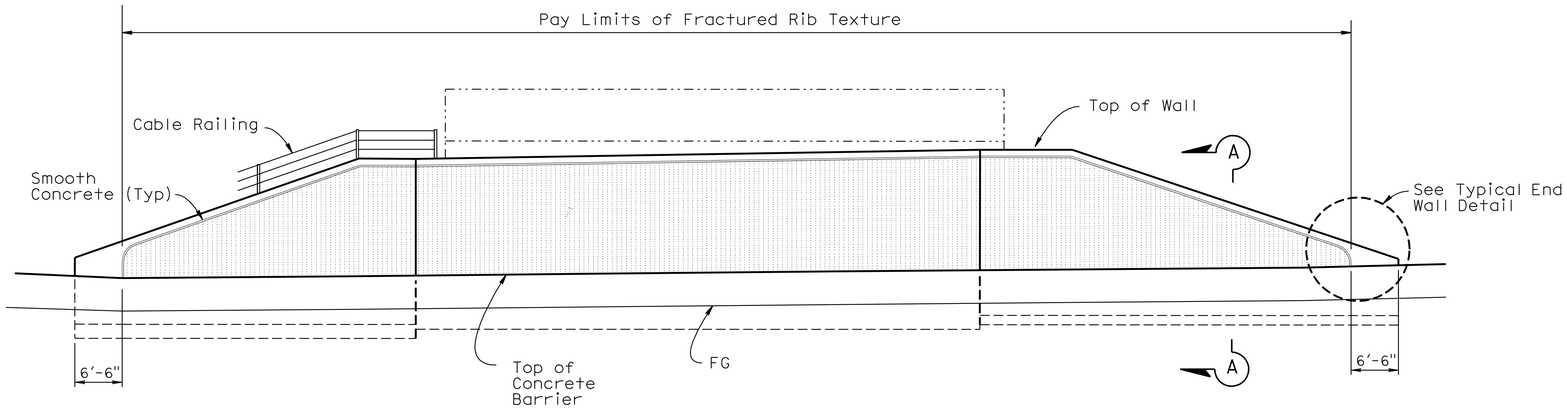

ELEVATION

1/8" = 1'-0"

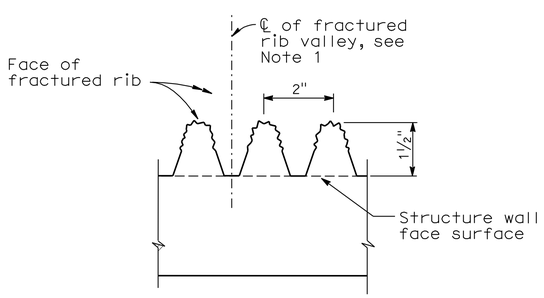

TYPICAL FRACTURED RIB TEXTURE

No Scale

NOTE:

1. Permitted location of weaken plane and expansion joints

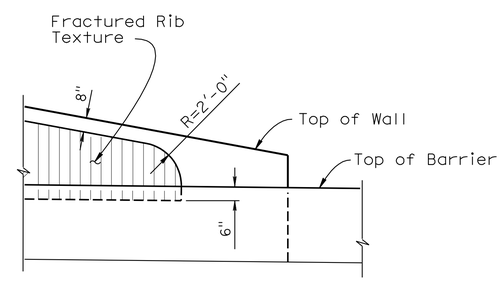

TYPICAL END WALL DETAIL

No Scale

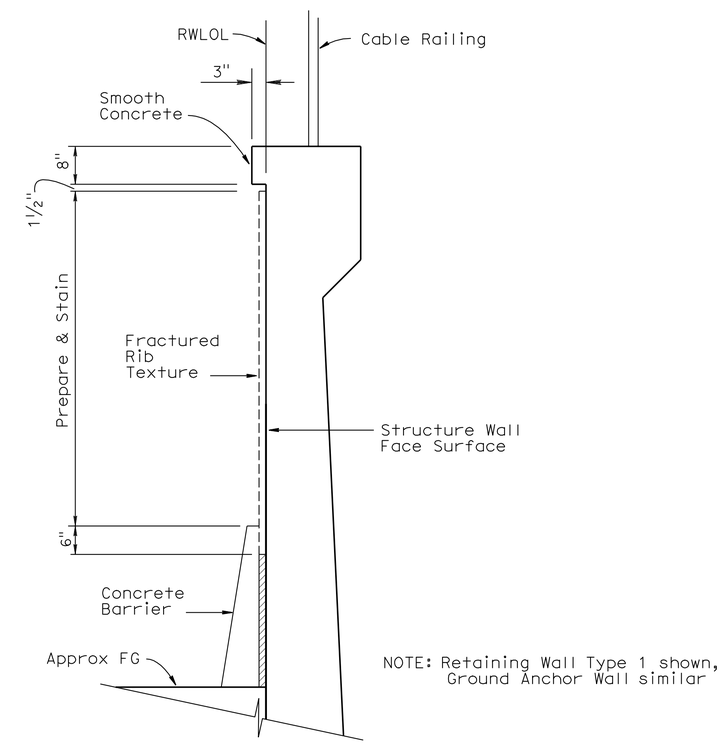

SECTION A-A

No Scale

NOTE:
THE CONTRACTOR SHALL VERIFY ALL CONTROLLING FIELD DIMENSIONS BEFORE ORDERING OR FABRICATING ANY MATERIAL.

	BY	CHECKED
DESIGN	T. Sanderson	H. Vu
DETAILS	R. Kirkland	H. Vu
QUANTITIES	D. Azzam	J. DeLatorre

STATE OF CALIFORNIA
DEPARTMENT OF TRANSPORTATION

DIVISION OF ENGINEERING SERVICES
STRUCTURE DESIGN
DESIGN BRANCH 10

BRIDGE NO. 54E0042
POST MILE 0.4

IOWA AVE OC RETAINING WALL NO. 31

ARCHITECTURAL DETAILS

STRUCTURES DESIGN DETAIL SHEET (ENGLISH) (REV. 09-01-10)

ORIGINAL SCALE IN INCHES FOR REDUCED PLANS 0 1 2 3

UNIT: 3589
PROJECT NUMBER & PHASE: 08000005061
CONTRACT NO.: 08-0m9401

DISREGARD PRINTS BEARING EARLIER REVISION DATES

REVISION DATES: 11-04-11 2-16-12 4-04-12

SHEET 7 OF 10

FILE => 54e0042yadt07.dgn

USERNAME => s121614 DATE PLOTTED => 18-APR-2012 TIME PLOTTED => 17:26

DIST	COUNTY	ROUTE	POST MILES TOTAL PROJECT	SHEET No	TOTAL SHEETS
08	Riv,SBd	91,215	21.5/21.7, 43.2/45.2,0.0/5.1	1230	1743

PROFESSIONAL GEOLOGIST 12-21-11

4-16-12
PLANS APPROVAL DATE

PROFESSIONAL GEOLOGIST Mark Wilson No. 8164 Exp. 06-30-12 STATE OF CALIFORNIA

The State of California or its officers or agents shall not be responsible for the accuracy or completeness of electronic copies of this plan sheet.

This LOTB sheet was prepared in accordance with the Caltrans Soil & Rock Logging, Classification, & Presentation Manual (June 2007).

BENCH MARK

BM 048
Set 1" IP W/ALUM PLUG STAMPED "SBD 215 PM 0.48 GPS 2010" TOP SLOPE NB IOWA AVE ON-RAMP; 13' WLY R/W FENCE; 6' WLY CL V-DITCH; 70' NELY RAMP METER SIGNAL.
N 1,832,045.099
E 6,763,416.060
Elev 927.971

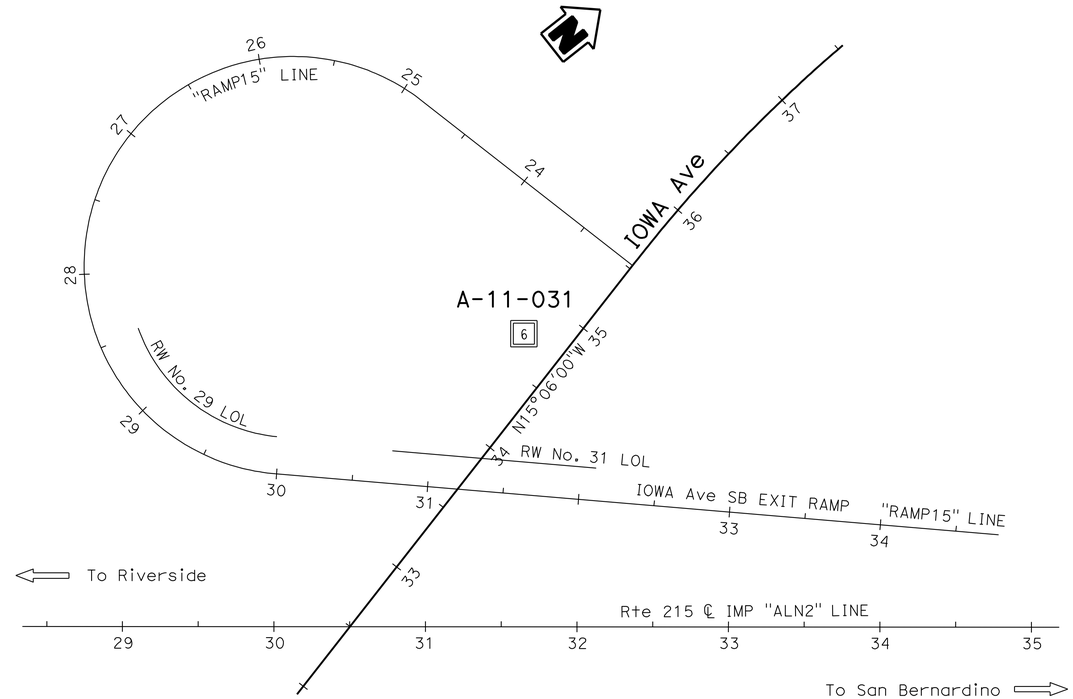

PLAN
1" = 50'

Note: No ground water encountered during field investigation.

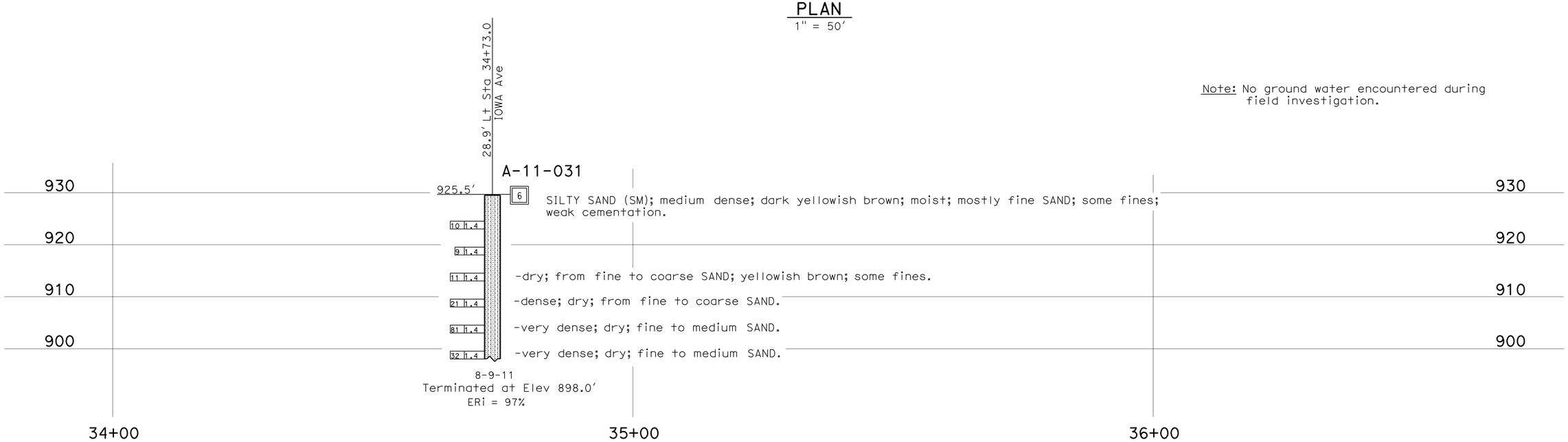

ENGINEERING SERVICES	MATERIALS AND GEOTECHNICAL SERVICES	STATE OF CALIFORNIA DEPARTMENT OF TRANSPORTATION	DIVISION OF ENGINEERING SERVICES STRUCTURE DESIGN DESIGN BRANCH 10	BRIDGE NO. 54E0042 POST MILE 0.0-5.7	IOWA AVE OC RETAINING WALL NO. 31 LOG OF TEST BORINGS 1 OF 3
FUNCTIONAL SUPERVISOR NAME: S. Wei	DRAWN BY: W. Tang 11/11 CHECKED BY: B. Gutierrez	FIELD INVESTIGATION BY: M. Wilson			

OGS CIVIL LOG OF TEST BORINGS SHEET — ORIGINAL SCALE IN INCHES FOR REDUCED PLANS 0 1 2 3 — UNIT: 3589 PROJECT NUMBER & PHASE: 08000005061 CONTRACT NO.: 08-0M9401 — DISREGARD PRINTS BEARING EARLIER REVISION DATES — REVISION DATES 11-09-11 12-19-11 — SHEET 8 OF 10

FILE => 54e0042zlotb08.dgn

USERNAME => s126614 DATE PLOTTED => 18-APR-2012 TIME PLOTTED => 17:26

REFERENCE: CALTRANS SOIL & ROCK LOGGING, CLASSIFICATION, AND PRESENTATION MANUAL (2010)

DIST	COUNTY	ROUTE	POST MILES TOTAL PROJECT	SHEET No	TOTAL SHEETS
08	Riv,SBd	91,215	21.5/21.7, 43.2/45.2,0.0/5.1	1231	1743

PROFESSIONAL GEOLOGIST 12-21-11

4-16-12
PLANS APPROVAL DATE

PROFESSIONAL GEOLOGIST Mark Wilson No. 8164 Exp. 06-30-12 STATE OF CALIFORNIA

The State of California or its officers or agents shall not be responsible for the accuracy or completeness of electronic copies of this plan sheet.

CEMENTATION

Description	Criteria
Weak	Crumbles or breaks with handling or little finger pressure.
Moderate	Crumbles or breaks with considerable finger pressure.
Strong	Will not crumble or break with finger pressure.

BOREHOLE IDENTIFICATION

Symbol	Hole Type	Description
Size	A	Auger Boring (hollow or solid stem bucket)
Size	R RW RC P	Rotary drilled boring (conventional) Rotary drilled with self-casing wire-line Rotary core with continuously-sampled, self-casing wire-line Rotary percussion boring (air)
Size	R RC	Rotary drilled diamond core Rotary drilled rock core
Size	HD HA	Hand driven (1-inch soil tube) Hand Auger
●	D	Dynamic Cone Penetration Boring
▲	CPT	Cone Penetration Test (ASTM D 5778)
⬚	O	Other (note on LOTB)

Note: Size in inches.

CONSISTENCY OF COHESIVE SOILS

Description	Shear Strength (tsf)	Pocket Penetrometer Measurement, PP, (tsf)	Torvane Measurement, TV, (tsf)	Vane Shear Measurement, VS, (tsf)
Very Soft	Less than 0.12	Less than 0.25	Less than 0.12	Less than 0.12
Soft	0.12 - 0.25	0.25 - 0.5	0.12 - 0.25	0.12 - 0.25
Medium Stiff	0.25 - 0.5	0.5 - 1	0.25 - 0.5	0.25 - 0.5
Stiff	0.5 - 1	1 - 2	0.5 - 1	0.5 - 1
Very Stiff	1 - 2	2 - 4	1 - 2	1 - 2
Hard	Greater than 2	Greater than 4	Greater than 2	Greater than 2

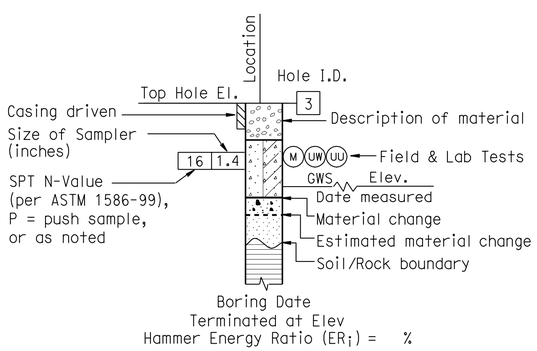

ROTARY BORING

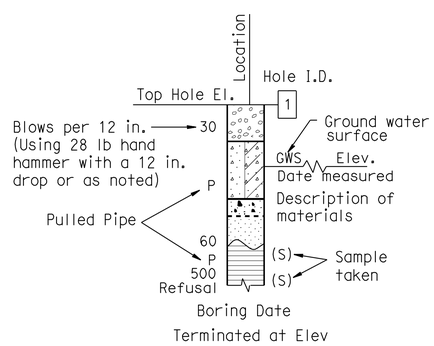

HAND BORING

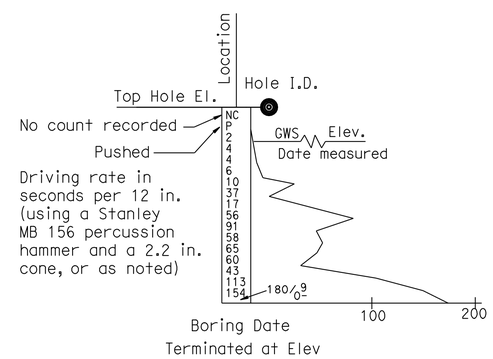

DYNAMIC CONE PENETRATION BORING

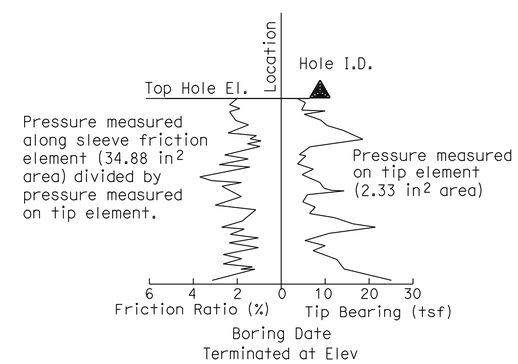

CONE PENETRATION TEST (CPT) BORING

ENGINEERING SERVICES	MATERIALS AND GEOTECHNICAL SERVICES	STATE OF CALIFORNIA DEPARTMENT OF TRANSPORTATION	DIVISION OF ENGINEERING SERVICES STRUCTURE DESIGN DESIGN BRANCH 10	BRIDGE NO. 54E0042 POST MILE 0.0-5.7	IOWA AVE OC RETAINING WALL NO. 31
	PREPARED BY: W. Tang 11/11				LOG OF TEST BORINGS 2 OF 3

GS LOTB SOIL LEGEND

ORIGINAL SCALE IN INCHES FOR REDUCED PLANS 0 1 2 3

UNIT: 3589
PROJECT NUMBER & PHASE: 08000005061 CONTRACT NO.: 08-0M9401

DISREGARD PRINTS BEARING EARLIER REVISION DATES → 12-30-11

REVISION DATES | SHEET 9 | OF 10

FILE => 54e0042zlotb09.dgn

USERNAME => s121614 DATE PLOTTED => 18-APR-2012 TIME PLOTTED => 17:26

REFERENCE: CALTRANS SOIL & ROCK LOGGING, CLASSIFICATION, AND PRESENTATION MANUAL (2010)

DIST	COUNTY	ROUTE	POST MILES TOTAL PROJECT	SHEET No	TOTAL SHEETS
08	Riv,SBd	91,215	21.5/21.7, 43.2/45.2,0.0/5.1	1232	1743

PROFESSIONAL GEOLOGIST 12-21-11

4-16-12
PLANS APPROVAL DATE

PROFESSIONAL GEOLOGIST Mark Wilson No. 8164 Exp. 06-30-12 STATE OF CALIFORNIA

The State of California or its officers or agents shall not be responsible for the accuracy or completeness of electronic copies of this plan sheet.

GROUP SYMBOLS AND NAMES

Graphic/Symbol	Group Names	Graphic/Symbol	Group Names
GW	Well-graded GRAVEL Well-graded GRAVEL with SAND	CL	Lean CLAY Lean CLAY with SAND Lean CLAY with GRAVEL SANDY lean CLAY SANDY lean CLAY with GRAVEL GRAVELLY lean CLAY GRAVELLY lean CLAY with SAND
GP	Poorly-graded GRAVEL Poorly-graded GRAVEL with SAND		
GW-GM	Well-graded GRAVEL with SILT Well-graded GRAVEL with SILT and SAND	CL-ML	SILTY CLAY SILTY CLAY with SAND SILTY CLAY with GRAVEL SANDY SILTY CLAY SANDY SILTY CLAY with GRAVEL GRAVELLY SILTY CLAY GRAVELLY SILTY CLAY with SAND
GW-GC	Well-graded GRAVEL with CLAY (or SILTY CLAY) Well-graded GRAVEL with CLAY and SAND (or SILTY CLAY and SAND)		
GP-GM	Poorly-graded GRAVEL with SILT Poorly-graded GRAVEL with SILT and SAND	ML	SILT SILT with SAND SILT with GRAVEL SANDY SILT SANDY SILT with GRAVEL GRAVELLY SILT GRAVELLY SILT with SAND
GP-GC	Poorly-graded GRAVEL with CLAY (or SILTY CLAY) Poorly-graded GRAVEL with CLAY and SAND (or SILTY CLAY and SAND)		
GM	SILTY GRAVEL SILTY GRAVEL with SAND	OL	ORGANIC lean CLAY ORGANIC lean CLAY with SAND ORGANIC lean CLAY with GRAVEL SANDY ORGANIC lean CLAY SANDY ORGANIC lean CLAY with GRAVEL GRAVELLY ORGANIC lean CLAY GRAVELLY ORGANIC lean CLAY with SAND
GC	CLAYEY GRAVEL CLAYEY GRAVEL with SAND		
GC-GM	SILTY, CLAYEY GRAVEL SILTY, CLAYEY GRAVEL with SAND	OL	ORGANIC SILT ORGANIC SILT with SAND ORGANIC SILT with GRAVEL SANDY ORGANIC SILT SANDY ORGANIC SILT with GRAVEL GRAVELLY ORGANIC SILT GRAVELLY ORGANIC SILT with SAND
SW	Well-graded SAND Well-graded SAND with GRAVEL		
SP	Poorly-graded SAND Poorly-graded SAND with GRAVEL	CH	Fat CLAY Fat CLAY with SAND Fat CLAY with GRAVEL SANDY fat CLAY SANDY fat CLAY with GRAVEL GRAVELLY fat CLAY GRAVELLY fat CLAY with SAND
SW-SM	Well-graded SAND with SILT Well-graded SAND with SILT and GRAVEL		
SW-SC	Well-graded SAND with CLAY (or SILTY CLAY) Well-graded SAND with CLAY and GRAVEL (or SILTY CLAY and GRAVEL)	MH	Elastic SILT Elastic SILT with SAND Elastic SILT with GRAVEL SANDY elastic SILT SANDY elastic SILT with GRAVEL GRAVELLY elastic SILT GRAVELLY elastic SILT with SAND
SP-SM	Poorly-graded SAND with SILT Poorly-graded SAND with SILT and GRAVEL		
SP-SC	Poorly-graded SAND with CLAY (or SILTY CLAY) Poorly-graded SAND with CLAY and GRAVEL (or SILTY CLAY and GRAVEL)	OH	ORGANIC fat CLAY ORGANIC fat CLAY with SAND ORGANIC fat CLAY with GRAVEL SANDY ORGANIC fat CLAY SANDY ORGANIC fat CLAY with GRAVEL GRAVELLY ORGANIC fat CLAY GRAVELLY ORGANIC fat CLAY with SAND
SM	SILTY SAND SILTY SAND with GRAVEL		
SC	CLAYEY SAND CLAYEY SAND with GRAVEL	OH	ORGANIC elastic SILT ORGANIC elastic SILT with SAND ORGANIC elastic SILT with GRAVEL SANDY ORGANIC elastic SILT SANDY ORGANIC elastic SILT with GRAVEL GRAVELLY ORGANIC elastic SILT GRAVELLY ORGANIC elastic SILT with SAND
SC-SM	SILTY, CLAYEY SAND SILTY, CLAYEY SAND with GRAVEL		
PT	PEAT	OL/OH	ORGANIC SOIL ORGANIC SOIL with SAND ORGANIC SOIL with GRAVEL SANDY ORGANIC SOIL SANDY ORGANIC SOIL with GRAVEL GRAVELLY ORGANIC SOIL GRAVELLY ORGANIC SOIL with SAND
	COBBLES COBBLES and BOULDERS BOULDERS		

FIELD AND LABORATORY TESTING

- (C) Consolidation (ASTM D 2435)
- (CL) Collapse Potential (ASTM D 5333)
- (CP) Compaction Curve (CTM 216)
- (CR) Corrosivity Testing (CTM 643, CTM 422, CTM 417)
- (CU) Consolidated Undrained Triaxial (ASTM D 4767)
- (DS) Direct Shear (ASTM D 3080)
- (EI) Expansion Index (ASTM D 4829)
- (M) Moisture Content (ASTM D 2216)
- (OC) Organic Content-% (ASTM D 2974)
- (P) Permeability (CTM 220)
- (PA) Particle Size Analysis (ASTM D 422)
- (PI) Plasticity Index (AASHTO T 90) Liquid Limit (AASHTO T 89)
- (PL) Point Load Index (ASTM D 5731)
- (PM) Pressure Meter
- (R) R-Value (CTM 301)
- (SE) Sand Equivalent (CTM 217)
- (SG) Specific Gravity (AASHTO T 100)
- (SL) Shrinkage Limit (ASTM D 427)
- (SW) Swell Potential (ASTM D 4546)
- (UC) Unconfined Compression-Soil (ASTM D 2166) Unconfined Compression-Rock (ASTM D 2938)
- (UU) Unconsolidated Undrained Triaxial (ASTM D 2850)
- (UW) Unit Weight (ASTM D 4767)

APPARENT DENSITY OF COHESIONLESS SOILS

Description	SPT N_{60} (Blows / 12 in.)
Very Loose	0 - 5
Loose	5 - 10
Medium Dense	10 - 30
Dense	30 - 50
Very Dense	Greater than 50

MOISTURE

Description	Criteria
Dry	No discernable moisture
Moist	Moisture present, but no free water
Wet	Visible free water

PERCENT OR PROPORTION OF SOILS

Description	Criteria
Trace	Particles are present but estimated to be less than 5%
Few	5% - 10%
Little	15% - 25%
Some	30% - 45%
Mostly	50% - 100%

PARTICLE SIZE

Description		Size (in.)
Boulder		Greater than 12
Cobble		3 - 12
Gravel	Coarse	3/4 - 3
	Fine	1/5 - 3/4
Sand	Coarse	1/16 - 1/5
	Medium	1/64 - 1/16
	Fine	1/300 - 1/64
Silt and Clay		Less than 1/300

ENGINEERING SERVICES

MATERIALS AND GEOTECHNICAL SERVICES

PREPARED BY: W. Tang 11/11

STATE OF CALIFORNIA DEPARTMENT OF TRANSPORTATION

DIVISION OF ENGINEERING SERVICES STRUCTURE DESIGN DESIGN BRANCH 10

BRIDGE NO. 54E0042

POST MILE 0.0-5.7

IOWA AVE OC RETAINING WALL NO. 31

LOG OF TEST BORINGS 3 OF 3

GS LOTB SOIL LEGEND

ORIGINAL SCALE IN INCHES FOR REDUCED PLANS 0 1 2 3

UNIT: 3589
PROJECT NUMBER & PHASE: 08000005061 CONTRACT NO.: 08-0M9401

DISREGARD PRINTS BEARING EARLIER REVISION DATES

REVISION DATES

SHEET 10 OF 10

FILE => 54e0042zlotb10.dgn

USERNAME => s121614 DATE PLOTTED => 18-APR-2012 TIME PLOTTED => 17:26

DIST	COUNTY	ROUTE	POST MILES TOTAL PROJECT	SHEET No.	TOTAL SHEETS
08	Riv,SBd	91,215	21.5/21.7, 43.2/45.2,0.0/5.1	1233	1743

REGISTERED CIVIL ENGINEER — DATE 4-06-12

4-16-12
PLANS APPROVAL DATE

REGISTERED PROFESSIONAL ENGINEER — LARRY WU No. C57035 Exp. 6-30-13 CIVIL — STATE OF CALIFORNIA

The State of California or its officers or agents shall not be responsible for the accuracy or completeness of electronic copies of this plan sheet.

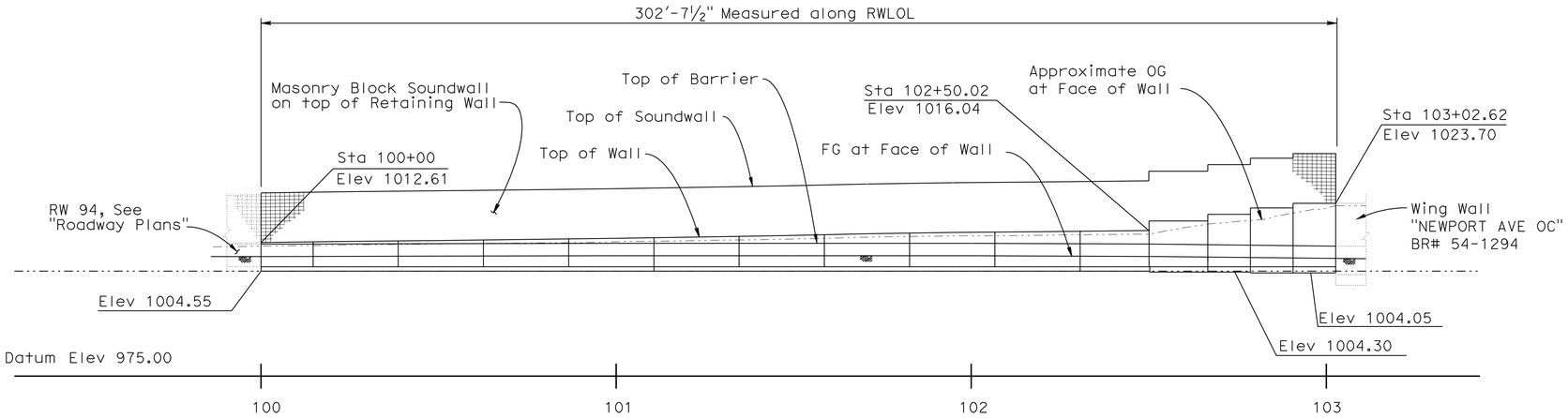

DEVELOPED MIRRORED ELEVATION

1" = 20'

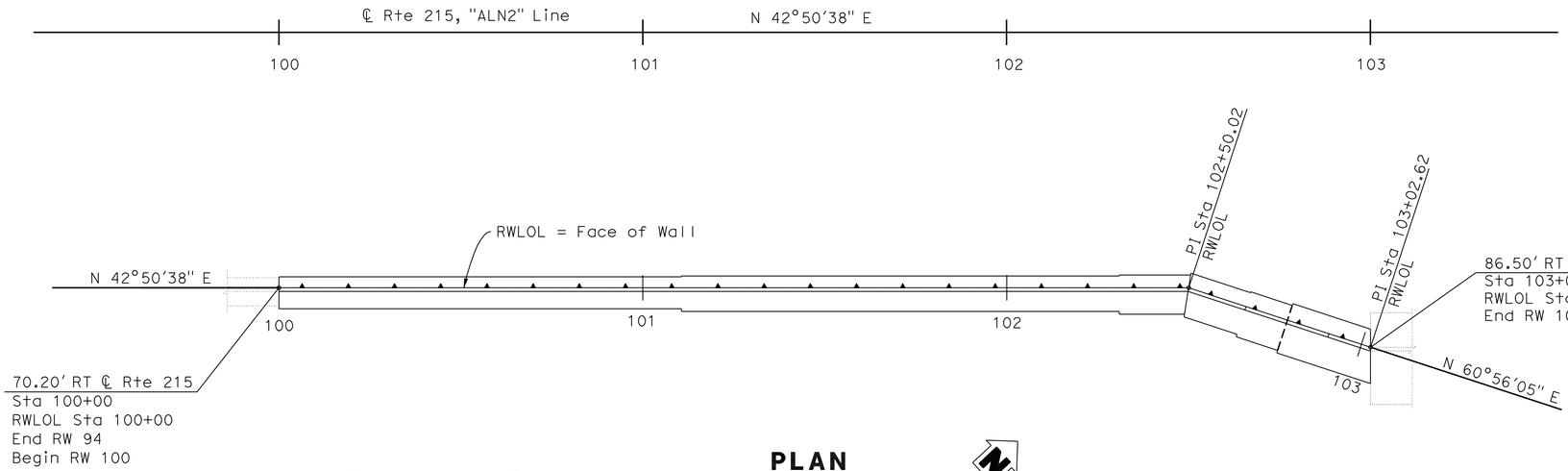

PLAN

1" = 20'

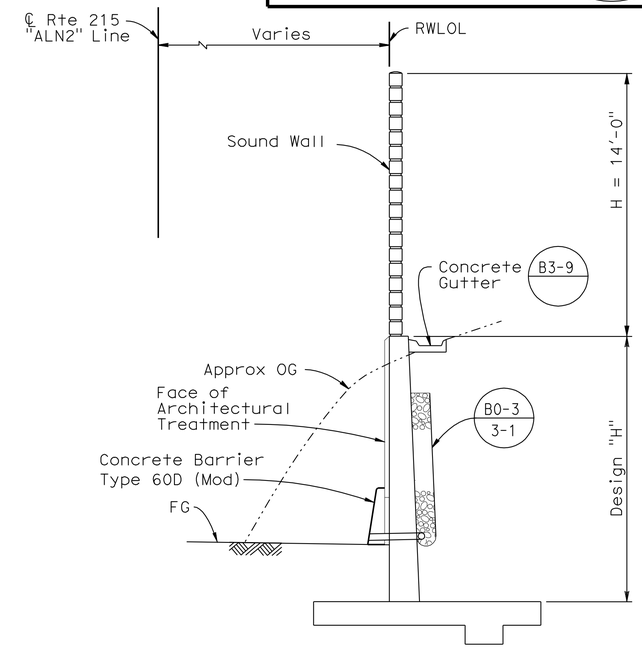

TYPICAL SECTION

¼" = 1'-0"

QUANTITIES

STRUCTURE EXCAVATION (RETAINING WALL)	1,443	CY
STRUCTURE BACKFILL (RETAINING WALL)	789	CY
PERVIOUS BACKFILL MATERIAL	53	CY
STRUCTURAL CONCRETE, RETAINING WALL	286	CY
ARCHITECTURAL SURFACE (TEXTURED CONCRETE BICOUNTY MURAL	147	SQFT
FRACTURED RIB TEXTURE	871	SQFT
SOUND WALL (MASONRY BLOCK)	4,237	SQFT
BAR REINFORCING STEEL (RETAINING WALL)	32,846	LB
PREPARE AND STAIN CONCRETE	1,018	SQFT
MINOR CONCRETE (GUTTER)	303	LF
CONCRETE BARRIER (TYPE 60D MOD)	303	LF

NOTE:
THE CONTRACTOR SHALL VERIFY ALL CONTROLLING FIELD DIMENSIONS BEFORE ORDERING OR FABRICATING ANY MATERIAL.

INDEX TO PLANS

Sheet No.	Title
1	GENERAL PLAN
2	RETAINING WALL LAYOUT NO. 1
3	RETAINING WALL LAYOUT NO. 2
4	MASONRY BLOCK SOUNDWALL ON RETAINING WALL DETAILS NO. 1
5	MASONRY BLOCK SOUNDWALL ON RETAINING WALL DETAILS NO. 2
6	RETAINING WALL TYPE 1SW (MOD)
7	ARCHITECTURAL SURFACE LAYOUT
8	LOG OF TEST BORINGS 1 OF 3
9	LOG OF TEST BORINGS 2 OF 3
10	LOG OF TEST BORINGS 3 OF 3

STANDARD PLANS DATED MAY 2006

A10A	ACRONYMS AND ABBREVIATIONS (SHEET 1 OF 2)
A10B	ACRONYMS AND ABBREVIATIONS (SHEET 2 OF 2)
A10C	SYMBOLS (SHEET 1 OF 2)
A10D	SYMBOLS (SHEET 2 OF 2)
A62B	LIMITS OF PAYMENT FOR EXCAVATION AND BACKFILL BRIDGE SURCHARGE AND WALL
B0-3	BRIDGE DETAILS
B3-8	RETAINING WALL DETAILS NO. 1
B3-9	RETAINING WALL DETAILS NO. 2

STANDARD PLAN SHEET NO.
DETAIL NO.

DANIEL T. ADAMS
DESIGN ENGINEER

	BY	CHECKED
DESIGN	M. Vo	C. Duan
DETAILS	D. Wooten	C. Duan
QUANTITIES	A. McPhee	C. Duan

LOAD FACTOR DESIGN — LIVE LOADING: HL93 W/"LOW-BOY": PERMIT DESIGN VEHICLE

	BY	CHECKED
LAYOUT	M. Vo	C. Duan
SPECIFICATIONS	J. Corrado	PLANS AND SPECS COMPARED Corrado

ORIGINAL SCALE IN INCHES FOR REDUCED PLANS 0 1 2 3

STATE OF CALIFORNIA
DEPARTMENT OF TRANSPORTATION

DIVISION OF ENGINEERING SERVICES
STRUCTURE DESIGN
DESIGN BRANCH 10

BRIDGE NO. 54E0043
POST MILE 1.72

RETAINING WALL NO. 100
GENERAL PLAN

UNIT: 3589
PROJECT NUMBER & PHASE: 08000005061
CONTRACT NO.: 08-0M9401

DISREGARD PRINTS BEARING EARLIER REVISION DATES

REVISION DATES: 8-05-11 9-14-11 3-28-12

SHEET 1 OF 10

STRUCTURES DESIGN GENERAL PLAN SHEET (ENGLISH) (REV.09-01-10)

FILE => 54e0043agp01.dgn

USERNAME => s126614 DATE PLOTTED => 18-APR-2012 TIME PLOTTED => 17:26

DIST	COUNTY	ROUTE	POST MILES TOTAL PROJECT	SHEET No.	TOTAL SHEETS
08	Riv,SBd	91,215	21.5/21.7, 43.2/45.2,0.0/5.1	1234	1743

REGISTERED CIVIL ENGINEER 12-30-11 DATE

4-16-12
PLANS APPROVAL DATE

REGISTERED PROFESSIONAL ENGINEER LARRY WU No. C57035 Exp. 6-30-13 CIVIL STATE OF CALIFORNIA

The State of California or its officers or agents shall not be responsible for the accuracy or completeness of electronic copies of this plan sheet.

NOTES:

1. For Utility information, see "Roadway Plans".
2. For Retaining Wall Section details, see "RETAINING WALL TYPE 1SW (MOD)" sheet.

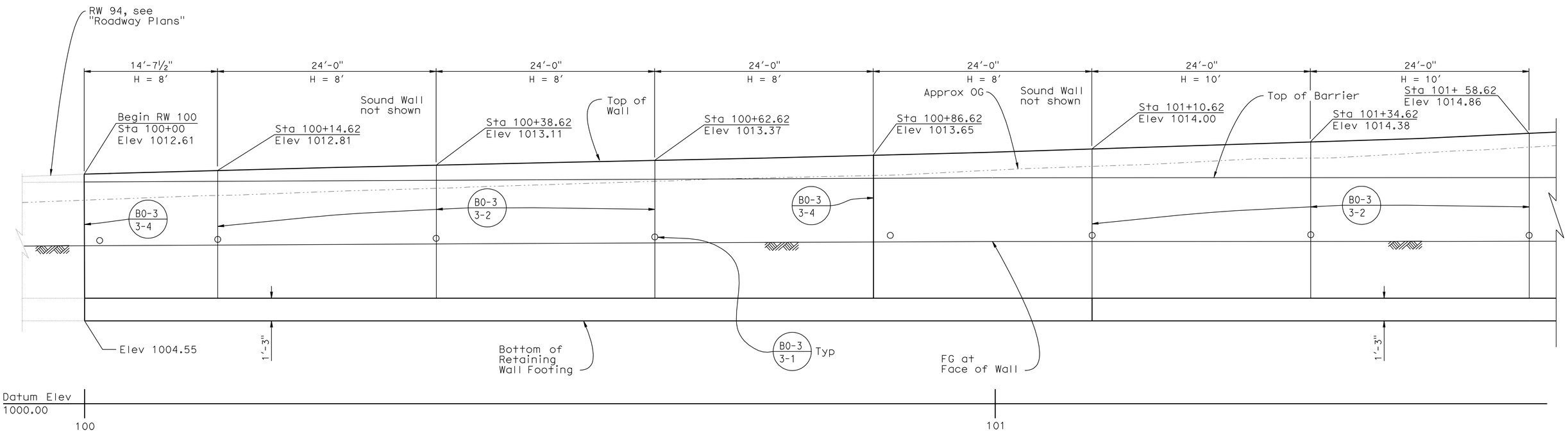

DEVELOPED MIRRORED ELEVATION

Horiz: 3/16" = 1'-0"
Vert: 3/8" = 1'-0"

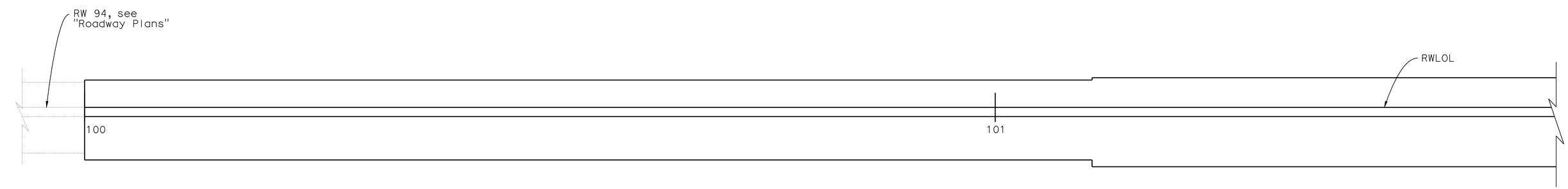

FOOTING PLAN

3/16" = 1'-0"

DESIGN	BY M. Vo	CHECKED C. Duan	
DETAILS	BY Wooten/Hallstrom	CHECKED C. Duan	
QUANTITIES	BY A. McPhee	CHECKED C. Duan	

STATE OF CALIFORNIA
DEPARTMENT OF TRANSPORTATION

DIVISION OF ENGINEERING SERVICES
STRUCTURE DESIGN
DESIGN BRANCH 10

BRIDGE NO. 54E0043
POST MILE 1.72

RETAINING WALL NO. 100
RETAINING WALL LAYOUT NO. 1

STRUCTURES DESIGN DETAIL SHEET (ENGLISH) (REV. 09-01-10)

ORIGINAL SCALE IN INCHES FOR REDUCED PLANS 0 1 2 3

UNIT: 3589
PROJECT NUMBER & PHASE: 08000005061
CONTRACT NO.: 08-0M9401

DISREGARD PRINTS BEARING EARLIER REVISION DATES

REVISION DATES 1-24-11 3-12-12

SHEET 2 OF 10

FILE => 54e0043grw_lo02.dgn

USERNAME => s121614 DATE PLOTTED => 18-APR-2012 TIME PLOTTED => 17:26

DIST	COUNTY	ROUTE	POST MILES TOTAL PROJECT	SHEET No.	TOTAL SHEETS
08	Riv,SBd	91,215	21.5/21.7, 43.2/45.2,0.0/5.1	1235	1743

REGISTERED CIVIL ENGINEER — DATE 12-30-11

4-16-12
PLANS APPROVAL DATE

REGISTERED PROFESSIONAL ENGINEER — LARRY WU — No. C57035 — Exp. 6-30-13 — CIVIL — STATE OF CALIFORNIA

The State of California or its officers or agents shall not be responsible for the accuracy or completeness of electronic copies of this plan sheet.

NOTES:

1. For Utility information, see "Roadway Plans".
2. For Retaining Wall Section details, see "RETAINING WALL TYPE 1SW (MOD)" sheet.

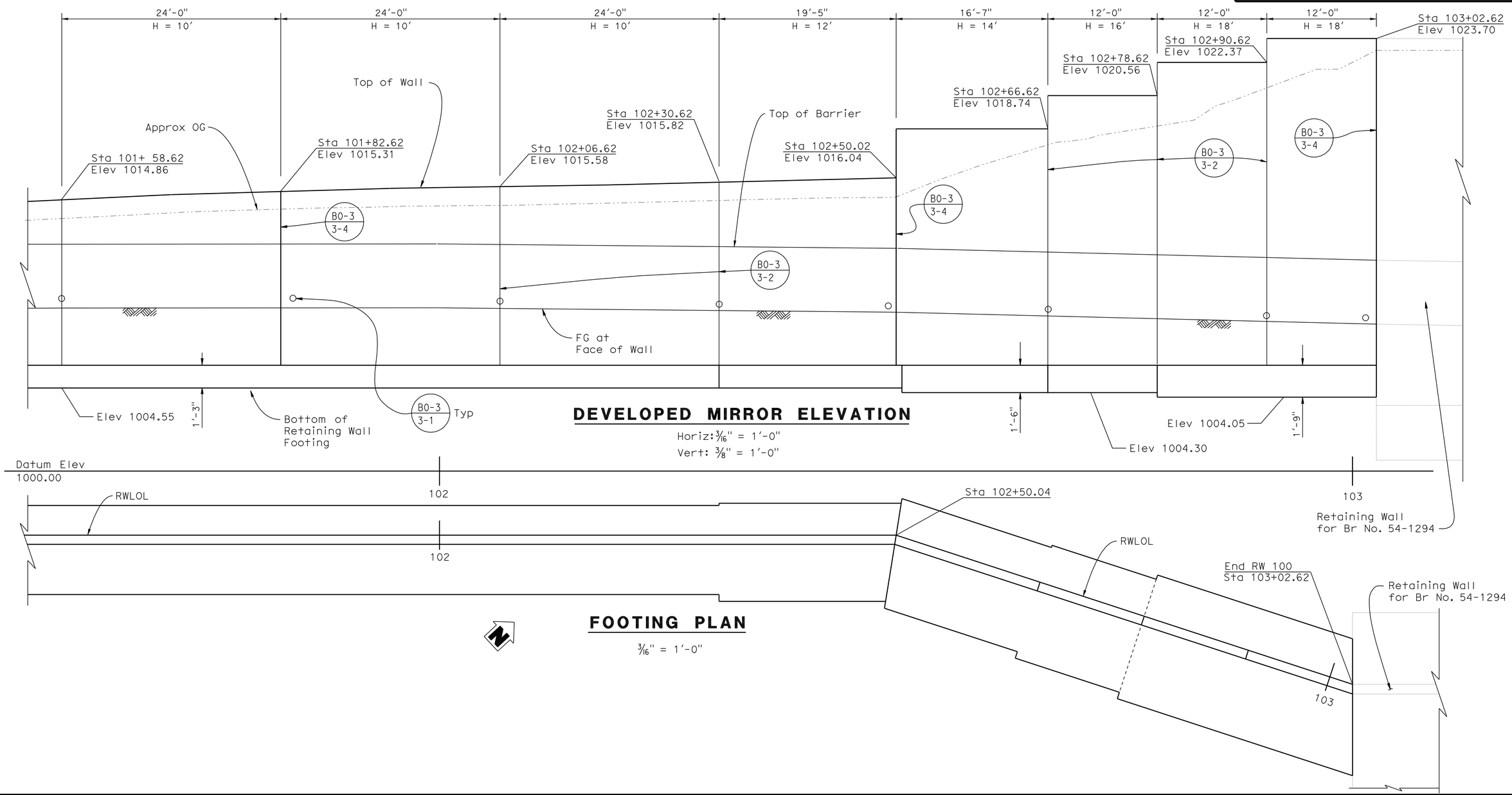

DEVELOPED MIRROR ELEVATION

Horiz: 3/16" = 1'-0"
Vert: 3/8" = 1'-0"

FOOTING PLAN

3/16" = 1'-0"

DESIGN	BY M. Vo	CHECKED C. Duan	
DETAILS	BY Wooten/Hallstrom	CHECKED C. Duan	
QUANTITIES	BY A. McPhee	CHECKED C. Duan	

STATE OF CALIFORNIA
DEPARTMENT OF TRANSPORTATION

DIVISION OF ENGINEERING SERVICES
STRUCTURE DESIGN
DESIGN BRANCH 10

BRIDGE NO. 54E0043
POST MILE 1.72

RETAINING WALL NO. 100
RETAINING WALL LAYOUT NO. 2

STRUCTURES DESIGN DETAIL SHEET (ENGLISH) (REV. 09-01-10)

ORIGINAL SCALE IN INCHES FOR REDUCED PLANS 0 1 2 3

UNIT: 3589
PROJECT NUMBER & PHASE: 08000005061
CONTRACT NO.: 08-0M9401

DISREGARD PRINTS BEARING EARLIER REVISION DATES

REVISION DATES: 7-25-11 9-14-11 3-12-12

SHEET 3 OF 10

FILE => 54e0043grw_lo03.dgn

USERNAME => s12764 DATE PLOTTED => 18-APR-2012 TIME PLOTTED => 17:27

DIST	COUNTY	ROUTE	POST MILES TOTAL PROJECT	SHEET No.	TOTAL SHEETS
08	Riv,SBd	91,215	21.5/21.7, 43.2/45.2,0.0/5.1	1236	1743

REGISTERED CIVIL ENGINEER — DATE 4-06-12

4-16-12
PLANS APPROVAL DATE

REGISTERED PROFESSIONAL ENGINEER — LARRY WU — No. C57035 — Exp. 6-30-13 — CIVIL — STATE OF CALIFORNIA

The State of California or its officers or agents shall not be responsible for the accuracy or completeness of electronic copies of this plan sheet.

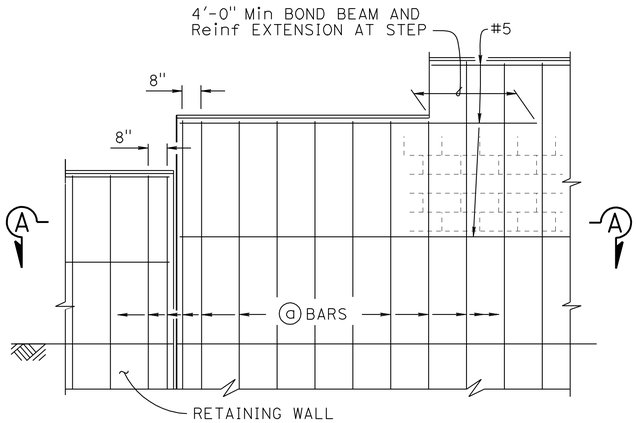

H=6'-0" THRU H=10'-0"

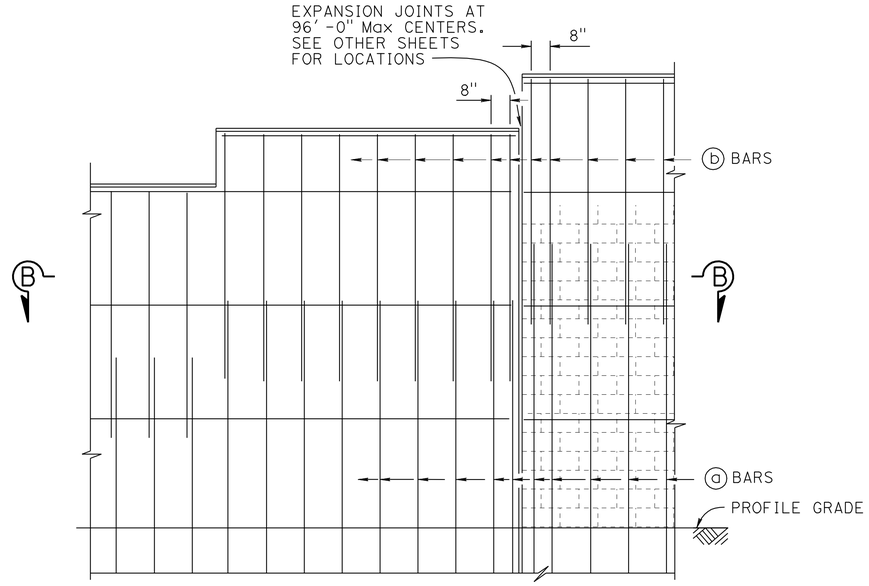

H=12'-0" THRU H=16'-0"

PART ELEVATION

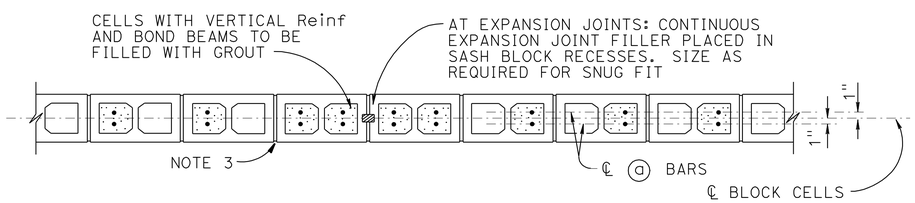

SECTION A-A

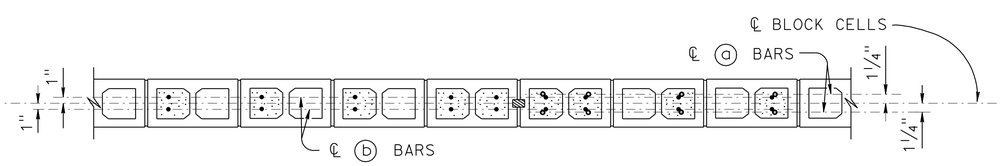

SECTION B-B

SOUND WALL REINFORCEMENT TABLE						
MAXIMUM "H"	ⓐ BARS @ 1'-4" Max	ⓑ BARS @ 1'-4" Max	"Y"	f'm (psi)	COMPRESSIVE STRENGTH OF CMU (psi)	MAXIMUM "H"
6'-0"	#4	——	——	1500	1900	6'-0"
8'-0"	#4	——	——	1500	1900	8'-0"
10'-0"	#4	——	——	1500	1900	10'-0"
12'-0"	#5	#4	6'-0"	2000	2800	12'-0"
14'-0"	#6	#4	8'-0"	2500	3750	14'-0"
16'-0"	#6	#4	10'-0"	2500	3750	16'-0"

DESIGN NOTES

DESIGN
Uniform Building Code, 1997 Edition and the Bridge Design Specifications

DESIGN WIND LOAD
33 psf

DESIGN SEISMIC LOAD
0.57 Dead load

REINFORCED CONCRETE
f'c = 3600 ksi
fy = 60 ksi

CONCRETE MASONRY

REGULAR STRENGTH	HIGH STRENGTH	
f'm = 1500 psi	f'm = 2000 psi	f'm = 2500 psi
fb = 495 psi	fb = 660 psi	fb = 830 psi
fs = 24,000 psi	fs = 24,000 psi	fs = 24,000 psi
n = 25.8	n = 19.3	n = 15.5

NOTES:

1. For type of block and joint finish, see other sheets
2. When blocks are laid in stacked bond, ladder type, galvanized joint reinforcement shall be provided. A minimum of 2 - 9 gauge wires continuous at 4'-0" maximum to be used. Locate reinforcement in joints that are at the approximate midpoint between bond beams
3. Horizontal joints shall be tooled concave or may be weathered
   Vertical joints shall be tooled concave or may be raked
4. For intermediate wall heights that are between the "H's" given, use the tabular information for the next higher "H"
5. See STANDARD PLANS B15-9 for other details

NO SCALE

RETAINING WALL NO. 100

MASONRY BLOCK SOUND WALL ON RETAINING WALL

DETAILS NO. 1

REVISED STANDARD DRAWING
FILE NO. xs15-120-1
APPROVAL DATE July 2011

STATE OF CALIFORNIA
DEPARTMENT OF TRANSPORTATION

DIVISION OF ENGINEERING SERVICES

BRIDGE NO. 54E0043
POST MILE 1.72

DS OSD 2147A (ENGLISH STANDARD DRAWING "XS" BORDER REV. (02-02-11)

ORIGINAL SCALE IN INCHES FOR REDUCED PLANS 0 1 2 3

UNIT: 3589
PROJECT NUMBER & PHASE: 08000005061
CONTRACT NO.: 08-0M9401

DISREGARD PRINTS BEARING EARLIER REVISION DATES

REVISION DATES

SHEET 4 OF 10

FILE => 54e0043gswmb04.dgn

USERNAME => s12614 DATE PLOTTED => 18-APR-2012 TIME PLOTTED => 17:27

DIST	COUNTY	ROUTE	POST MILES TOTAL PROJECT	SHEET No.	TOTAL SHEETS
08	Riv,SBd	91,215	21.5/21.7, 43.2/45.2,0.0/5.1	1237	1743

REGISTERED CIVIL ENGINEER — DATE 4-06-12

4-16-12
PLANS APPROVAL DATE

REGISTERED PROFESSIONAL ENGINEER — LARRY WU — No. C57035 — Exp. 6-30-13 — CIVIL — STATE OF CALIFORNIA

The State of California or its officers or agents shall not be responsible for the accuracy or completeness of electronic copies of this plan sheet.

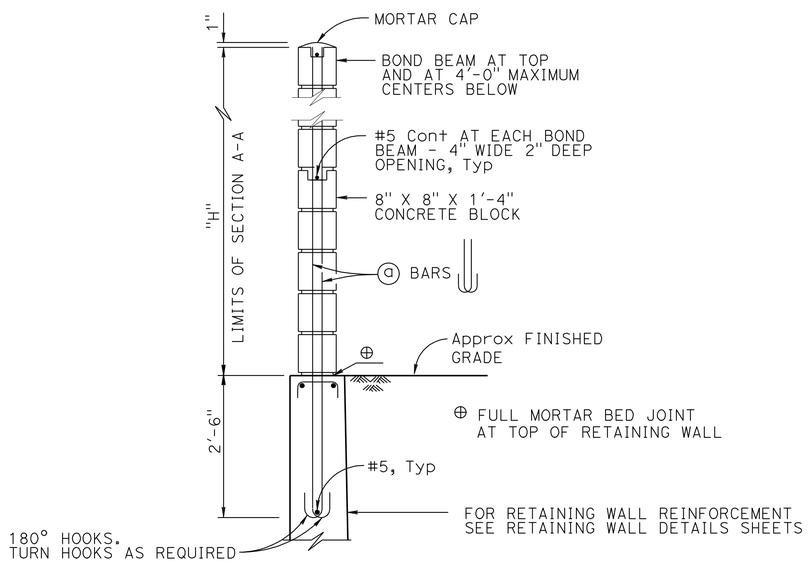

NOTE:
For details not shown, see H=12'-0" thru H=16'-0"

H=6'-0" THRU H=10'-0"

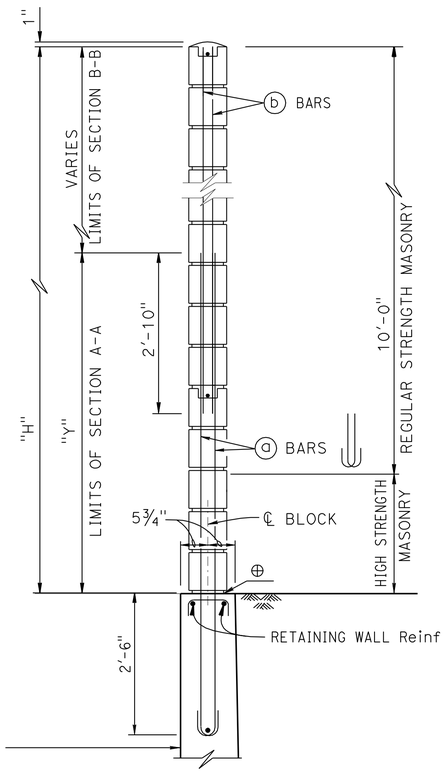

NOTE:
For details not shown, see H=6'-0" thru H=10'-0"

H=12'-0" THRU H=16'-0"

TYPICAL SECTION

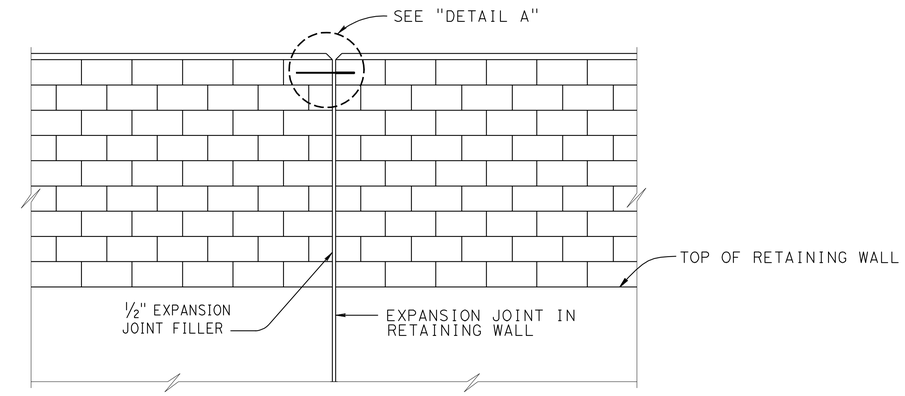

ALIGNMENT KEY DETAIL

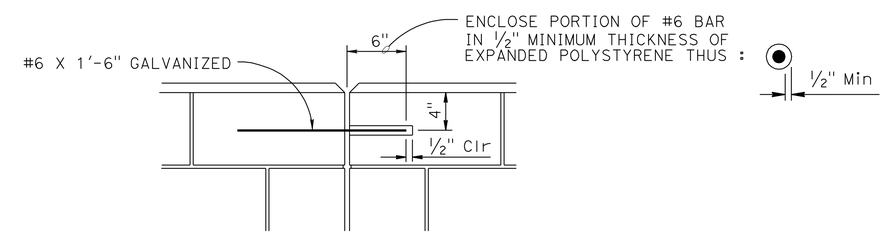

DETAIL A

NO SCALE

REVISED STANDARD DRAWING

FILE NO. xs15-120-2

APPROVAL DATE July 2011

STATE OF CALIFORNIA DEPARTMENT OF TRANSPORTATION

DIVISION OF ENGINEERING SERVICES

BRIDGE NO. 54E0043

POST MILE 1.72

RETAINING WALL NO. 100

MASONRY BLOCK SOUND WALL ON RETAINING WALL

DETAILS NO. 2

DS OSD 2147A (ENGLISH STANDARD DRAWING "XS" BORDER REV. (02-02-11))

ORIGINAL SCALE IN INCHES FOR REDUCED PLANS 0 1 2 3

UNIT: 3589
PROJECT NUMBER & PHASE: 08000005061
CONTRACT NO.: 08-0M9401

DISREGARD PRINTS BEARING EARLIER REVISION DATES

REVISION DATES

SHEET 5 OF 10

FILE => 54e0043gswmb05.dgn

USERNAME => s121614 DATE PLOTTED => 18-APR-2012 TIME PLOTTED => 17:27

DIST	COUNTY	ROUTE	POST MILES TOTAL PROJECT	SHEET No.	TOTAL SHEETS
08	Riv,SBd	91,215	21.5/21.7, 43.2/45.2,0.0/5.1	1238	1743

REGISTERED CIVIL ENGINEER — DATE 4-06-12

4-16-12
PLANS APPROVAL DATE

REGISTERED PROFESSIONAL ENGINEER — LARRY WU No. C57035 Exp. 6-30-13 CIVIL — STATE OF CALIFORNIA

The State of California or its officers or agents shall not be responsible for the accuracy or completeness of electronic copies of this plan sheet.

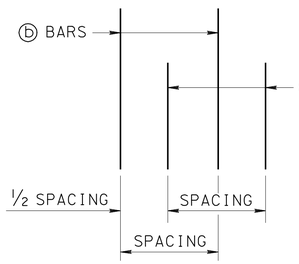

DETAIL B

NO SCALE

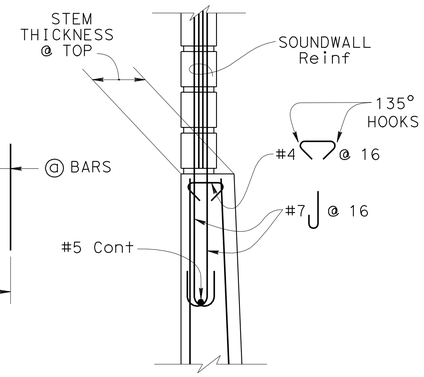

DETAIL A

NO SCALE

GENERAL NOTES

1. For soundwall and retaining wall architectural treatment, see details elsewhere in project plans.
2. For details not shown and drainage notes, see B3-8
3. Footing cover, 1'-6" minimum.
4. Limit of no splicing rebars = 3 times the bottom thickness of the stem.
5. Placement of reinforcements:
   ⓑ & ⓒ bars are spliced together.
   * ⓐ & ⓑ bars are bundled together.
   ** Alternate ⓐ & ⓑ bars are shown in "Detail B".
   Cont = Continuous.
6. For soundwall reinforcements, see "MASONRY BLOCK SOUND WALL ON RETAINING WALL DETAILS NO. 1 and NO. 2" sheets.

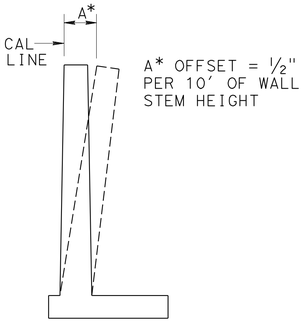

A* OFFSET = ½" PER 10' OF WALL STEM HEIGHT

WALL OFFSET

NO SCALE

Values for offsetting forms to be determined by the Engineer

ALTERNATIVE A: (CONSTANT TOP OF WALL THICKNESS) TABLE OF REINFORCING STEEL DIMENSIONS AND DATA									
Design H		6'	8'	10'	12'	14'	16'	18'	20'
W		8'-0"	8'-9"	9'-9"	10'-9"	12'-0"	13'-0"	14'-3"	15'-3"
C		2'-9"	3'-0"	3'-3"	3'-6"	4'-0"	4'-3"	4'-9"	5'-0"
B		5'-3"	5'-9"	6'-6"	7'-3"	8'-0"	8'-9"	9'-6"	10'-3"
F Spread footing		1'-3"	1'-3"	1'-3"	1'-3"	1'-6"	1'-6"	1'-9"	2'-0"
Batter		½:12	½:12	½:12	½:12	½:12	½:12	½:12	½:12
Stem thcknss @ top		1'-0"	1'-0"	1'-0"	1'-0"	1'-0"	1'-0"	1'-0"	1'-0"
ⓐ Bars				#6 @18**	#7 @18**	#8 @18**	#9 @18**	#10 @18**	#8 @ 9*
X				Cont	Cont	Cont	Cont	Cont	Cont
Y				8'-0"	6'-6"	7'-6"	8'-6"	9'-6"	9'-6"
ⓑ Bars		#5 @12	#5 @ 9	#6 @18**	#7 @18**	#8 @18**	#9 @18**	#10 @18**	#8 @ 9*
X		Cont	Cont	Cont	Cont	Cont	Cont	Cont	Cont
Y		Cont	Cont	Cont	10'-6"	13'-0"	15'-0"	17'-6"	19'-6"
ⓒ Bars					#6 @18	#6 @18	#6 @18	#6 @18	#6 @18
ⓓ Bars		#5 @12	#5 @12	#5 @ 9	#6 @ 9	#6 @ 9	#6 @ 6	#8 @ 9	#8 @ 9
Ultimate Bearing Capacity Req'd k/sf		5.5	6.1	6.6	7.3	8.1	9.0	9.9	11.3

ALTERNATIVE B: (VARIABLE TOP OF WALL THICKNESS) TABLE OF REINFORCING STEEL DIMENSIONS AND DATA									
Design H		6'	8'	10'	12'	14'	16'	18'	20'
W		8'-0"	8'-6"	9'-3"	10'-3"	11'-3"	13'-0"	13'-9"	16'-0"
C		2'-9"	2'-9"	3'-0"	3'-6"	3'-9"	4'-3"	4'-6"	5'-3"
B		5'-3"	5'-9"	6'-3"	6'-9"	7'-6"	8'-9"	9'-3"	10'-9"
F Spread footing		1'-3"	1'-3"	1'-3"	1'-3"	1'-6"	1'-6"	1'-9"	2'-0"
Batter		0	0	0	0	0	0	0	0
Stem thcknss @ top		1'-0"	1'-0"	1'-0"	1'-0"	1'-3"	1'-3"	1'-6"	2'-0"
ⓐ Bars				#6 @12**	#5 @ 6*	#9 @18**	#9 @12**	#9 @12**	#9 @12**
X				Cont	Cont	Cont	Cont	Cont	Cont
Y				5'-6"	5'-6"	8'-6"	8'-6"	8'-6"	8'-6"
ⓑ Bars		#5 @ 9	#6 @ 9	#6 @12**	#5 @ 6*	#9 @18**	#9 @12**	#9 @12**	#9 @12**
X		Cont	Cont	Cont	Cont	Cont	Cont	Cont	Cont
Y		Cont	Cont	Cont	Cont	11'-6"	11'-6"	12'-0"	12'-0"
ⓒ Bars						#7 @18	#7 @12	#7 @12	#7 @12
ⓓ Bars		#5 @12	#5 @ 9	#5 @ 9	#6 @ 9	#6 @ 9	#9 @12	#9 @12	#7 @ 6
Ultimate Bearing Capacity Req'd k/sf		5.5	6.5	7.3	7.6	9.0	9.0	10.6	10.5

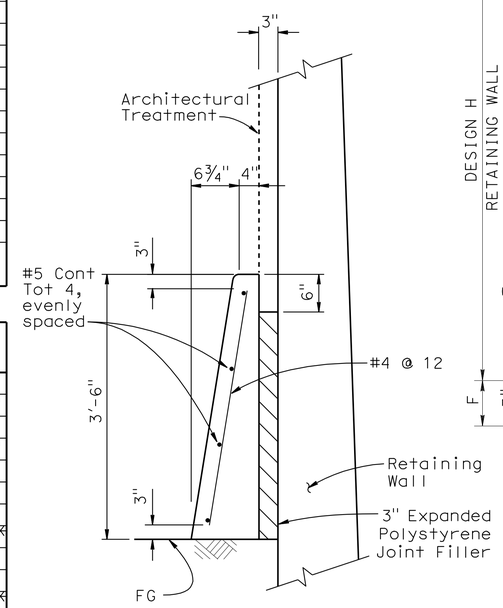

CONCRETE BARRIER (TYPE 60D MOD)

No scale

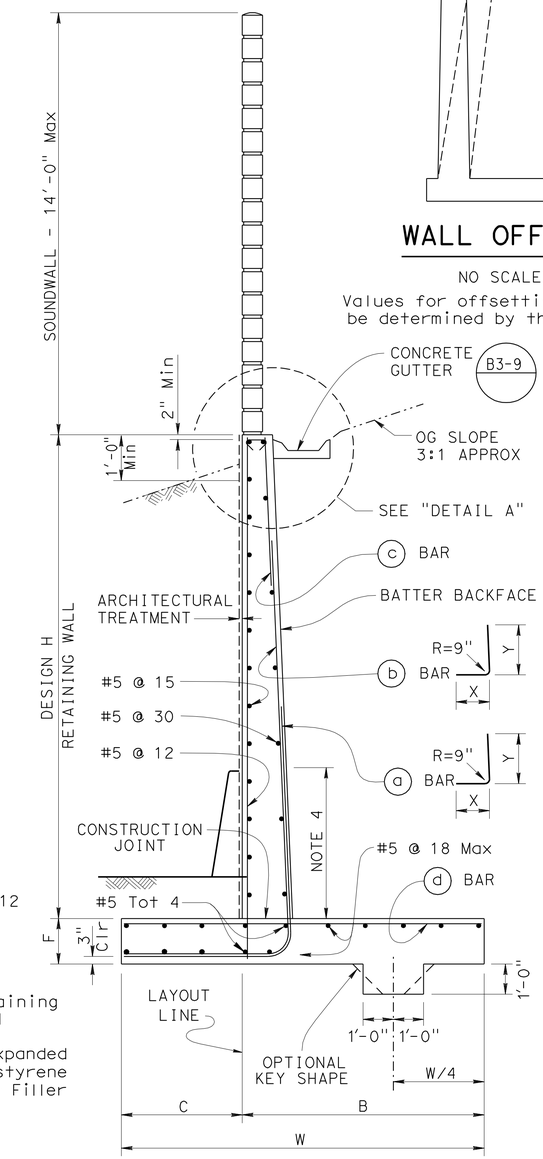

SPREAD FOOTING SECTION

NO SCALE

DESIGN DATA

DESIGN: Load Factor Design (LFD)

CONCRETE: Reinforced Concrete, f'c = 3600 psi
fy = 60,000 psi

Loading case:
Slope with slope ratio of 3:1 and 14'-0" soundwall

Seismic Load = 0.3 dead load
Wind Load = 30 psf
Dead Load of soundwall = 1414 lb/ft

SEISMIC LOAD: SOIL
Kh = 0.3g
Kv = 0.0
Kae : Mononobe-Okabe Method

SOIL: $\emptyset = 34°$ $\gamma = 120$ pcf
Equivalent fluid pressure:
= 36 pcf for determination of toe pressure
= 27 pcf for determination of heel pressure

EXTERNAL STABILITY:
Group 1 : D + E + SC
Group 2 : D + E + SC + W
Group 3 : D + PYM

INTERNAL STABILITY (LFD):
Group A : βD + 1.7E + 1.7SC
Group B : βD + 1.7E + 1.3W
Group C (stem) : 1.0D + 1.0E + 1.0EQD + 1.0EQE
Group C (footing) : D + PYM

Where : β = 1.0 or 1.3 whichever controls design
D = Dead Load
E = Lateral Earth Pressure
SC = Surcharge
W = Wind load
EQD = Seismic Dead Load
EQE = Seismic Lateral Earth Pressure
PYM = Probable Yield Moment (1.3 x Nominal Yield Moment of Stem)

DESIGN	BY M. Vo	CHECKED C. Duan	
DETAILS	BY Wooten/Hallstrom	CHECKED C. Duan	
QUANTITIES	BY A. McPhee	CHECKED C. Duan	

STATE OF CALIFORNIA DEPARTMENT OF TRANSPORTATION

DIVISION OF ENGINEERING SERVICES STRUCTURE DESIGN DESIGN BRANCH 10

BRIDGE NO. 54E0043
POST MILE 1.72

RETAINING WALL NO. 100
RETAINING WALL TYPE 1SW (MOD)

STRUCTURES DESIGN DETAIL SHEET (ENGLISH) (REV. 09-01-10)

ORIGINAL SCALE IN INCHES FOR REDUCED PLANS 0 1 2 3

UNIT: 3589
PROJECT NUMBER & PHASE: 08000005061
CONTRACT NO.: 08-0M9401

DISREGARD PRINTS BEARING EARLIER REVISION DATES

REVISION DATES 9-14-11 1-18-12

SHEET 6 OF 10

FILE => 54e0043gswrwdet06.dgn

USERNAME => s12614 DATE PLOTTED => 18-APR-2012 TIME PLOTTED => 17:27

DIST	COUNTY	ROUTE	POST MILES TOTAL PROJECT	SHEET No.	TOTAL SHEETS
08	Riv,SBd	91,215	21.5/21.7, 43.2/45.2,0.0/5.1	1239	1743

LICENSED LANDSCAPE ARCHITECT 3-29-12 DATE

4-16-12
PLANS APPROVAL DATE

LICENSED LANDSCAPE ARCHITECT RAY DESSELLE No. 2916 Exp. 11-30-13 STATE OF CALIFORNIA

The State of California or its officers or agents shall not be responsible for the accuracy or completeness of electronic copies of this plan sheet.

NOTES:

1. For Typical Bi-County Mural Elevation, see "ARCHITECTURAL SURFACE DETAILS NO. 1 & NO. 2" sheets in "RETAINING WALL NO. 40" Structure Plans.
2. For Section A-A, see "ARCHITECTURAL SURFACE DETAILS NO. 11" sheet in "RETAINING WALL NO. 40" Structure Plans.
3. For Typical Ribbon Motiff Elevation, see "ARCHITECTURAL SURFACE DETAILS NO. 3" sheet in "RETAINING WALL NO. 40" Structure Plans.

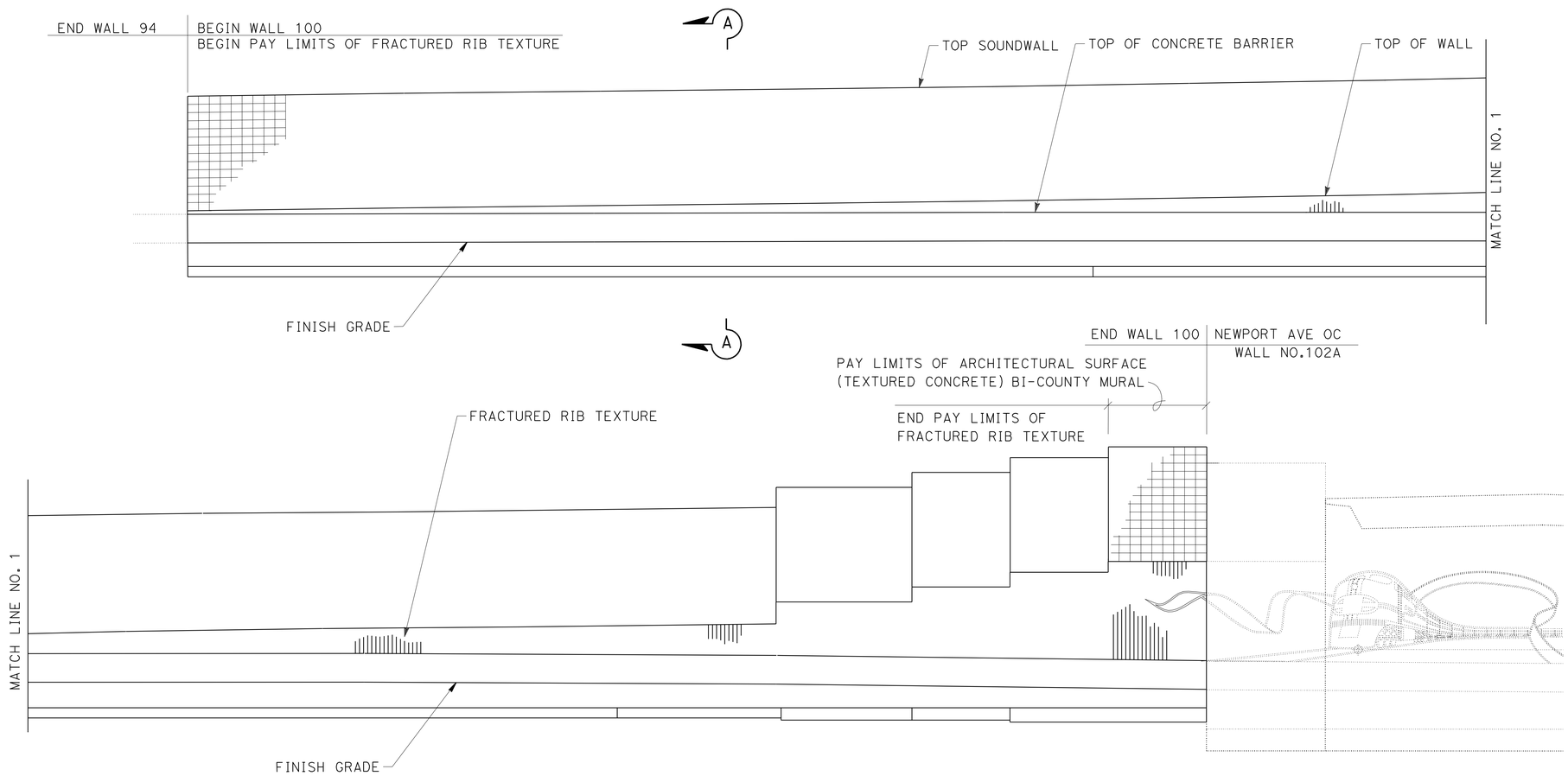

MIRROR ELEVATION

SCALE: 1/8"=1'-0"

THIS PLAN IS ACCURATE FOR ARCHITECTURAL TREATMENT WORK ONLY.

	BY	CHECKED
DESIGN	M. Hall/B. Fleming/B. Strout	M. Bishop/I.Tasabia
DETAILS	M. Bishop/G. Hallstrom	M. Hall
QUANTITIES	A. McPhee	C. Duan

STATE OF CALIFORNIA
DEPARTMENT OF TRANSPORTATION

DIVISION OF ENGINEERING SERVICES
STRUCTURE DESIGN
DESIGN BRANCH 10

BRIDGE NO. 54E0043
POST MILE 1.72

RETAINING WALL NO. 100
ARCHITECTURAL SURFACE LAYOUT

STRUCTURES DESIGN DETAIL SHEET (ENGLISH) (REV. 09-01-10)

ORIGINAL SCALE IN INCHES FOR REDUCED PLANS 0 1 2 3

UNIT: 3589
PROJECT NUMBER & PHASE: 08000005061
CONTRACT NO.: 08-0M9401

DISREGARD PRINTS BEARING EARLIER REVISION DATES

REVISION DATES

SHEET 7 OF 10

FILE => 54e0043sas1o07.dgn

USERNAME => s121614 DATE PLOTTED => 18-APR-2012 TIME PLOTTED => 17:27

DIST	COUNTY	ROUTE	POST MILES TOTAL PROJECT	SHEET No.	TOTAL SHEETS
08	Riv,SBd	91,215	21.5/21.7, 43.2/45.2,0.0/5.1	1240	1743

REGISTERED CIVIL ENGINEER 1-6-12 DATE

4-16-12
PLANS APPROVAL DATE

REGISTERED PROFESSIONAL ENGINEER Brian Gutierrez No. C66258 Exp. 6-30-12 CIVIL STATE OF CALIFORNIA

The State of California or its officers or agents shall not be responsible for the accuracy or completeness of electronic copies of this plan sheet.

This LOTB sheet was prepared in accordance with the Caltrans Soil & Rock Logging, Classification, & Presentation Manual (2010 Edition).

BENCH MARK

BM 3070
FD STD BR DISK STAMPED "SBD 215-1.78 1988"
IN SIDEWALK OF NEWPORT AVE BRIDGE PER PSOMAS
CONTROL SHEET.
N 1,837200.230
E 6,767861.110
Elev 1029.10′
NAVD88

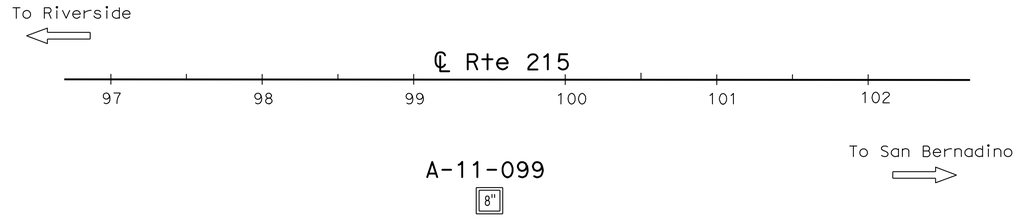

PLAN

1" = 50′

Note: No ground water encountered during field investigation.

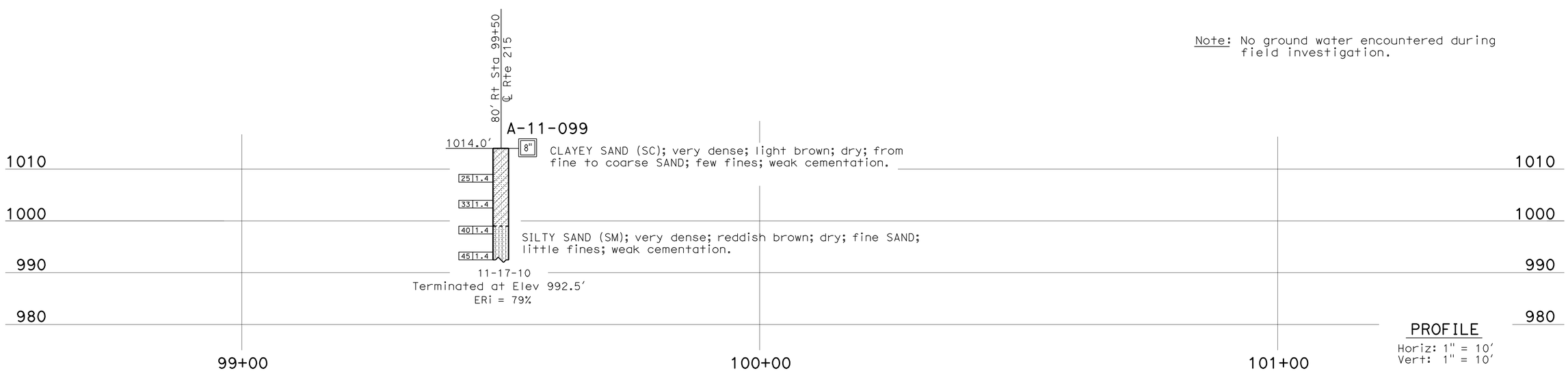

PROFILE

Horiz: 1" = 10′
Vert: 1" = 10′

ENGINEERING SERVICES	MATERIALS AND GEOTECHNICAL SERVICES	STATE OF CALIFORNIA DEPARTMENT OF TRANSPORTATION	DIVISION OF ENGINEERING SERVICES STRUCTURE DESIGN DESIGN BRANCH 10	BRIDGE NO. 54E0043 POST MILE 1.72	RETAINING WALL NO. 100 LOG OF TEST BORINGS 1 OF 3
FUNCTIONAL SUPERVISOR NAME: S. Wei	DRAWN BY: I.G-Remmen CHECKED BY: M. Wilson	FIELD INVESTIGATION BY: B. Gutierrez			

OGS CIVIL LOG OF TEST BORINGS SHEET

ORIGINAL SCALE IN INCHES FOR REDUCED PLANS 0 1 2 3

UNIT: 3643
PROJECT NUMBER & PHASE: 08000005061 CONTRACT NO.: 08-0M9401

DISREGARD PRINTS BEARING EARLIER REVISION DATES

REVISION DATES 01-05-12 SHEET 8 OF 10

FILE => 54e0043zltb08.dgn

USERNAME => s121614 DATE PLOTTED => 18-APR-2012 TIME PLOTTED => 17:28

REFERENCE: CALTRANS SOIL & ROCK LOGGING, CLASSIFICATION, AND PRESENTATION MANUAL (2010)

DIST	COUNTY	ROUTE	POST MILES TOTAL PROJECT	SHEET No.	TOTAL SHEETS
08	Riv,SBd	91,215	21.5/21.7, 43.2/45.2,0.0/5.1	1241	1743

REGISTERED CIVIL ENGINEER 1-6-12 DATE

4-16-12
PLANS APPROVAL DATE

REGISTERED PROFESSIONAL ENGINEER Brian Gutierrez No. C66258 Exp. 6-30-12 CIVIL STATE OF CALIFORNIA

The State of California or its officers or agents shall not be responsible for the accuracy or completeness of electronic copies of this plan sheet.

CEMENTATION

Description	Criteria
Weak	Crumbles or breaks with handling or little finger pressure.
Moderate	Crumbles or breaks with considerable finger pressure.
Strong	Will not crumble or break with finger pressure.

BOREHOLE IDENTIFICATION

Symbol	Hole Type	Description
Size	A	Auger Boring (hollow or solid stem bucket)
Size	R RW RC P	Rotary drilled boring (conventional) Rotary drilled with self-casing wire-line Rotary core with continuously-sampled, self-casing wire-line Rotary percussion boring (air)
Size	R	Rotary drilled diamond core
Size	HD HA	Hand driven (1-inch soil tube) Hand Auger
●	D	Dynamic Cone Penetration Boring
▲	CPT	Cone Penetration Test (ASTM D 5778)
⬚	O	Other (note on LOTB)

Note: Size in inches.

CONSISTENCY OF COHESIVE SOILS

Description	Shear Strength (tsf)	Pocket Penetrometer Measurement, PP, (tsf)	Torvane Measurement, TV, (tsf)	Vane Shear Measurement, VS, (tsf)
Very Soft	Less than 0.12	Less than 0.25	Less than 0.12	Less than 0.12
Soft	0.12 - 0.25	0.25 - 0.5	0.12 - 0.25	0.12 - 0.25
Medium Stiff	0.25 - 0.5	0.5 - 1	0.25 - 0.5	0.25 - 0.5
Stiff	0.5 - 1	1 - 2	0.5 - 1	0.5 - 1
Very Stiff	1 - 2	2 - 4	1 - 2	1 - 2
Hard	Greater than 2	Greater than 4	Greater than 2	Greater than 2

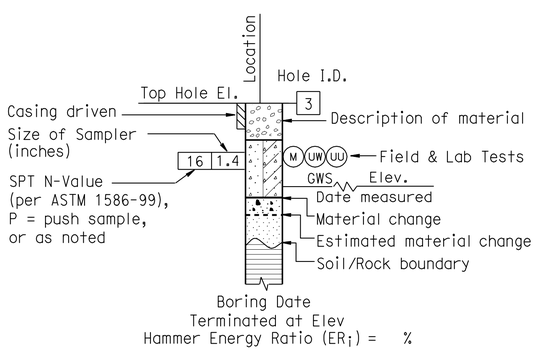

ROTARY BORING

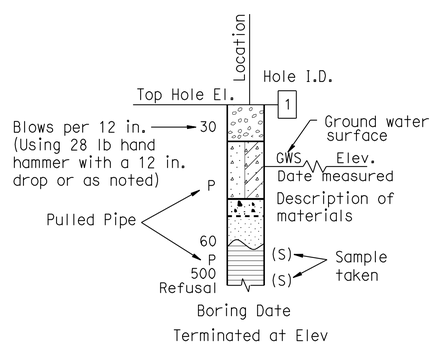

HAND BORING

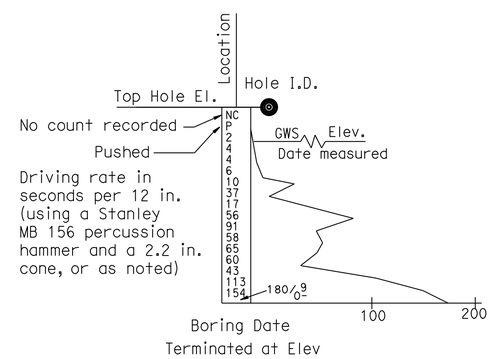

DYNAMIC CONE PENETRATION BORING

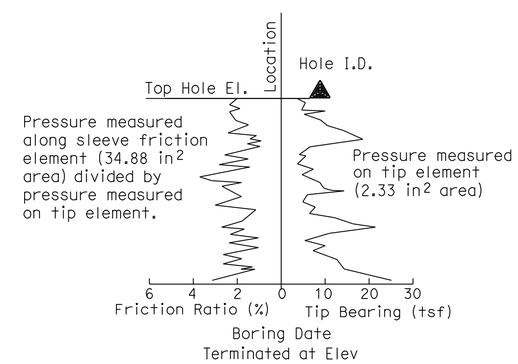

CONE PENETRATION TEST (CPT) BORING

ENGINEERING SERVICES	GEOTECHNICAL SERVICES	STATE OF CALIFORNIA DEPARTMENT OF TRANSPORTATION	DIVISION OF ENGINEERING SERVICES STRUCTURE DESIGN DESIGN BRANCH 10	BRIDGE NO. 54E0043 POST MILE 1.72	RETAINING WALL NO. 100 LOG OF TEST BORINGS 2 OF 3
	PREPARED BY: I.G-Remmen				

GS LOTB SOIL LEGEND

ORIGINAL SCALE IN INCHES FOR REDUCED PLANS 0 1 2 3

UNIT: 3643
PROJECT NUMBER & PHASE: 08000005061 CONTRACT NO.: 08-0M9401

DISREGARD PRINTS BEARING EARLIER REVISION DATES

REVISION DATES

SHEET 9 OF 10

FILE => 54e0043zltb09.dgn

USERNAME => s121614 DATE PLOTTED => 18-APR-2012 TIME PLOTTED => 17:28

REFERENCE: CALTRANS SOIL & ROCK LOGGING, CLASSIFICATION, AND PRESENTATION MANUAL (2010)

DIST	COUNTY	ROUTE	POST MILES TOTAL PROJECT	SHEET No.	TOTAL SHEETS
08	Riv,SBd	91,215	21.5/21.7, 43.2/45.2,0.0/5.1	1242	1743

REGISTERED CIVIL ENGINEER 1-6-12 DATE

4-16-12
PLANS APPROVAL DATE

REGISTERED PROFESSIONAL ENGINEER Brian Gutierrez No. C66258 Exp. 6-30-12 CIVIL STATE OF CALIFORNIA

The State of California or its officers or agents shall not be responsible for the accuracy or completeness of electronic copies of this plan sheet.

GROUP SYMBOLS AND NAMES

Graphic/Symbol	Group Names	Graphic/Symbol	Group Names
GW	Well-graded GRAVEL Well-graded GRAVEL with SAND	CL	Lean CLAY Lean CLAY with SAND Lean CLAY with GRAVEL SANDY lean CLAY SANDY lean CLAY with GRAVEL GRAVELLY lean CLAY GRAVELLY lean CLAY with SAND
GP	Poorly-graded GRAVEL Poorly-graded GRAVEL with SAND		
GW-GM	Well-graded GRAVEL with SILT Well-graded GRAVEL with SILT and SAND	CL-ML	SILTY CLAY SILTY CLAY with SAND SILTY CLAY with GRAVEL SANDY SILTY CLAY SANDY SILTY CLAY with GRAVEL GRAVELLY SILTY CLAY GRAVELLY SILTY CLAY with SAND
GW-GC	Well-graded GRAVEL with CLAY (or SILTY CLAY) Well-graded GRAVEL with CLAY and SAND (or SILTY CLAY and SAND)		
GP-GM	Poorly-graded GRAVEL with SILT Poorly-graded GRAVEL with SILT and SAND	ML	SILT SILT with SAND SILT with GRAVEL SANDY SILT SANDY SILT with GRAVEL GRAVELLY SILT GRAVELLY SILT with SAND
GP-GC	Poorly-graded GRAVEL with CLAY (or SILTY CLAY) Poorly-graded GRAVEL with CLAY and SAND (or SILTY CLAY and SAND)		
GM	SILTY GRAVEL SILTY GRAVEL with SAND	OL	ORGANIC lean CLAY ORGANIC lean CLAY with SAND ORGANIC lean CLAY with GRAVEL SANDY ORGANIC lean CLAY SANDY ORGANIC lean CLAY with GRAVEL GRAVELLY ORGANIC lean CLAY GRAVELLY ORGANIC lean CLAY with SAND
GC	CLAYEY GRAVEL CLAYEY GRAVEL with SAND		
GC-GM	SILTY, CLAYEY GRAVEL SILTY, CLAYEY GRAVEL with SAND	OL	ORGANIC SILT ORGANIC SILT with SAND ORGANIC SILT with GRAVEL SANDY ORGANIC SILT SANDY ORGANIC SILT with GRAVEL GRAVELLY ORGANIC SILT GRAVELLY ORGANIC SILT with SAND
SW	Well-graded SAND Well-graded SAND with GRAVEL		
SP	Poorly-graded SAND Poorly-graded SAND with GRAVEL	CH	Fat CLAY Fat CLAY with SAND Fat CLAY with GRAVEL SANDY fat CLAY SANDY fat CLAY with GRAVEL GRAVELLY fat CLAY GRAVELLY fat CLAY with SAND
SW-SM	Well-graded SAND with SILT Well-graded SAND with SILT and GRAVEL		
SW-SC	Well-graded SAND with CLAY (or SILTY CLAY) Well-graded SAND with CLAY and GRAVEL (or SILTY CLAY and GRAVEL)	MH	Elastic SILT Elastic SILT with SAND Elastic SILT with GRAVEL SANDY elastic SILT SANDY elastic SILT with GRAVEL GRAVELLY elastic SILT GRAVELLY elastic SILT with SAND
SP-SM	Poorly-graded SAND with SILT Poorly-graded SAND with SILT and GRAVEL		
SP-SC	Poorly-graded SAND with CLAY (or SILTY CLAY) Poorly-graded SAND with CLAY and GRAVEL (or SILTY CLAY and GRAVEL)	OH	ORGANIC fat CLAY ORGANIC fat CLAY with SAND ORGANIC fat CLAY with GRAVEL SANDY ORGANIC fat CLAY SANDY ORGANIC fat CLAY with GRAVEL GRAVELLY ORGANIC fat CLAY GRAVELLY ORGANIC fat CLAY with SAND
SM	SILTY SAND SILTY SAND with GRAVEL		
SC	CLAYEY SAND CLAYEY SAND with GRAVEL	OH	ORGANIC elastic SILT ORGANIC elastic SILT with SAND ORGANIC elastic SILT with GRAVEL SANDY ORGANIC elastic SILT SANDY ORGANIC elastic SILT with GRAVEL GRAVELLY ORGANIC elastic SILT GRAVELLY ORGANIC elastic SILT with SAND
SC-SM	SILTY, CLAYEY SAND SILTY, CLAYEY SAND with GRAVEL		
PT	PEAT	OL/OH	ORGANIC SOIL ORGANIC SOIL with SAND ORGANIC SOIL with GRAVEL SANDY ORGANIC SOIL SANDY ORGANIC SOIL with GRAVEL GRAVELLY ORGANIC SOIL GRAVELLY ORGANIC SOIL with SAND
	COBBLES COBBLES and BOULDERS BOULDERS		

FIELD AND LABORATORY TESTING

- (C) Consolidation (ASTM D 2435)
- (CL) Collapse Potential (ASTM D 5333)
- (CP) Compaction Curve (CTM 216)
- (CR) Corrosivity Testing (CTM 643, CTM 422, CTM 417)
- (CU) Consolidated Undrained Triaxial (ASTM D 4767)
- (DS) Direct Shear (ASTM D 3080)
- (EI) Expansion Index (ASTM D 4829)
- (M) Moisture Content (ASTM D 2216)
- (OC) Organic Content-% (ASTM D 2974)
- (P) Permeability (CTM 220)
- (PA) Particle Size Analysis (ASTM D 422)
- (PI) Plasticity Index (AASHTO T 90) Liquid Limit (AASHTO T 89)
- (PL) Point Load Index (ASTM D 5731)
- (PM) Pressure Meter
- (R) R-Value (CTM 301)
- (SE) Sand Equivalent (CTM 217)
- (SG) Specific Gravity (AASHTO T 100)
- (SL) Shrinkage Limit (ASTM D 427)
- (SW) Swell Potential (ASTM D 4546)
- (UC) Unconfined Compression-Soil (ASTM D 2166) Unconfined Compression-Rock (ASTM D 2938)
- (UU) Unconsolidated Undrained Triaxial (ASTM D 2850)
- (UW) Unit Weight (ASTM D 4767)

APPARENT DENSITY OF COHESIONLESS SOILS

Description	SPT N_{60} (Blows / 12 in.)
Very Loose	0 - 5
Loose	5 - 10
Medium Dense	10 - 30
Dense	30 - 50
Very Dense	Greater than 50

MOISTURE

Description	Criteria
Dry	No discernable moisture
Moist	Moisture present, but no free water
Wet	Visible free water

PERCENT OR PROPORTION OF SOILS

Description	Criteria
Trace	Particles are present but estimated to be less than 5%
Few	5% - 10%
Little	15% - 25%
Some	30% - 45%
Mostly	50% - 100%

PARTICLE SIZE

Description		Size (in.)
Boulder		Greater than 12
Cobble		3 - 12
Gravel	Coarse	3/4 - 3
	Fine	1/5 - 3/4
Sand	Coarse	1/16 - 1/5
	Medium	1/64 - 1/16
	Fine	1/300 - 1/64
Silt and Clay		Less than 1/300

ENGINEERING SERVICES

GEOTECHNICAL SERVICES

PREPARED BY: I.G-Remmen

STATE OF CALIFORNIA DEPARTMENT OF TRANSPORTATION

DIVISION OF ENGINEERING SERVICES STRUCTURE DESIGN DESIGN BRANCH 10

BRIDGE NO. 54E0043

POST MILE 1.72

RETAINING WALL NO. 100

LOG OF TEST BORINGS 3 OF 3

GS LOTB SOIL LEGEND

ORIGINAL SCALE IN INCHES FOR REDUCED PLANS 0 1 2 3

UNIT: 3643
PROJECT NUMBER & PHASE: 08000005061
CONTRACT NO.: 08-0M9401

DISREGARD PRINTS BEARING EARLIER REVISION DATES

REVISION DATES

SHEET 10 OF 10

FILE => 54e0043zltb10.dgn

USERNAME => s121614 DATE PLOTTED => 18-APR-2012 TIME PLOTTED => 17:28

DIST	COUNTY	ROUTE	POST MILES TOTAL PROJECT	SHEET No.	TOTAL SHEETS
08	Riv,SBd	91,215	21.5/21.7, 43.2/45.2,0.0/5.1	1243	1743

REGISTERED CIVIL ENGINEER — DATE 4-06-12

4-16-12
PLANS APPROVAL DATE

REGISTERED PROFESSIONAL ENGINEER — LARRY WU No. C57035 Exp. 6-30-13 CIVIL — STATE OF CALIFORNIA

The State of California or its officers or agents shall not be responsible for the accuracy or completeness of electronic copies of this plan sheet.

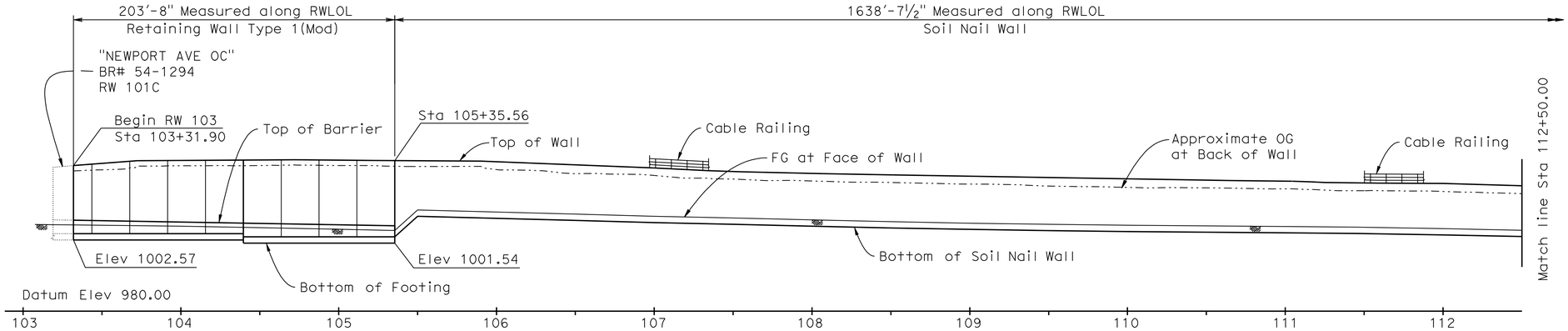

DEVELOPED ELEVATION

Vert. 1" = 20'
Horiz. 1" = 40'

INDEX TO PLANS

Sheet No.	Title
1	GENERAL PLAN NO.1
2	GENERAL PLAN NO.2
3	STRUCTURE PLAN NO. 1
4	STRUCTURE PLAN NO. 2
5	STRUCTURE PLAN NO. 3
6	STRUCTURE PLAN NO. 4
7	STRUCTURE PLAN NO. 5
8	STRUCTURE PLAN NO. 6
9	STRUCTURE PLAN NO. 7
10	STRUCTURE PLAN NO. 8
11	STRUCTURE PLAN NO. 9
12	RETAINING WALL TYPE 1 (MOD) DETAILS
13	SOIL NAIL WALL DETAILS NO. 1
14	SOIL NAIL WALL DETAILS NO. 2
15	SOIL NAIL WALL DETAILS NO. 3
16	ARCHITECTURAL SURFACE LAYOUT NO. 1
17	ARCHITECTURAL SURFACE LAYOUT NO. 2
18	ARCHITECTURAL SURFACE LAYOUT NO. 3
19	LOG OF TEST BORINGS 1 OF 7
20	LOG OF TEST BORINGS 2 OF 7
21	LOG OF TEST BORINGS 3 OF 7
22	LOG OF TEST BORINGS 4 OF 7
23	LOG OF TEST BORINGS 5 OF 7
24	LOG OF TEST BORINGS 6 OF 7
25	LOG OF TEST BORINGS 7 OF 7

QUANTITIES

STRUCTURE EXCAVATION (RETAINING WALL)	3,195	CY
STRUCTURE EXCAVATION (SOIL NAIL WALL)	2,001	CY
STRUCTURE BACKFILL (RETAINING WALL)	2,019	CY
STRUCTURE BACKFILL (SOIL NAIL WALL)	171	CY
PERVIOUS BACKFILL MATERIAL	141	CY
SOIL NAIL	28,555	LF
STRUCTURAL CONCRETE, RETAINING WALL	1,299	CY
ARCHITECTURAL SURFACE (TEXTURED CONCRETE BICOUNTY MURAL	28,246	SQFT
BAR REINFORCING STEEL (RETAINING WALL)	214,172	LB
SHOTCRETE	417	CY
PREPARE AND STAIN CONCRETE	28,246	SQFT
MINOR CONCRETE (GUTTER)	1,831	LF
CABLE RAILING	1,831	LF
CONCRETE BARRIER (TYPE 60D MOD)	1,831	LF

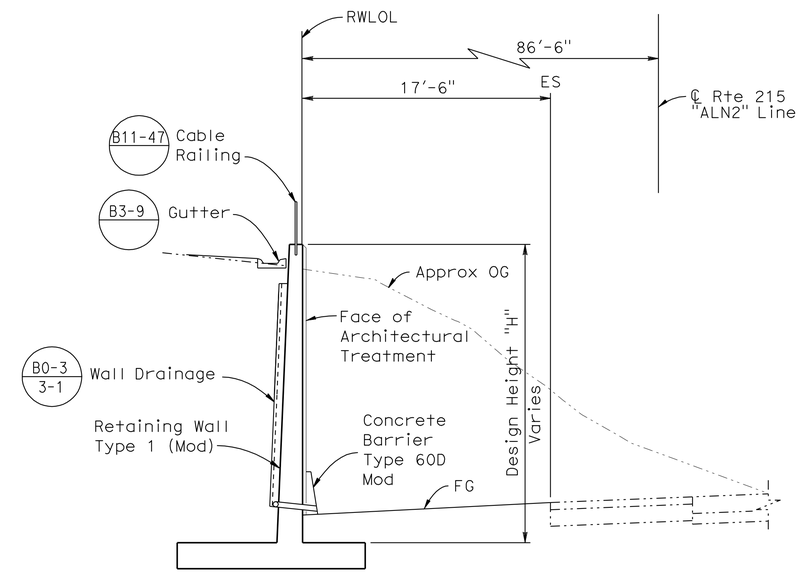

TYPICAL SECTION

¼" = 1'-0"
Sta 103+31.90 to Sta 105+35.56

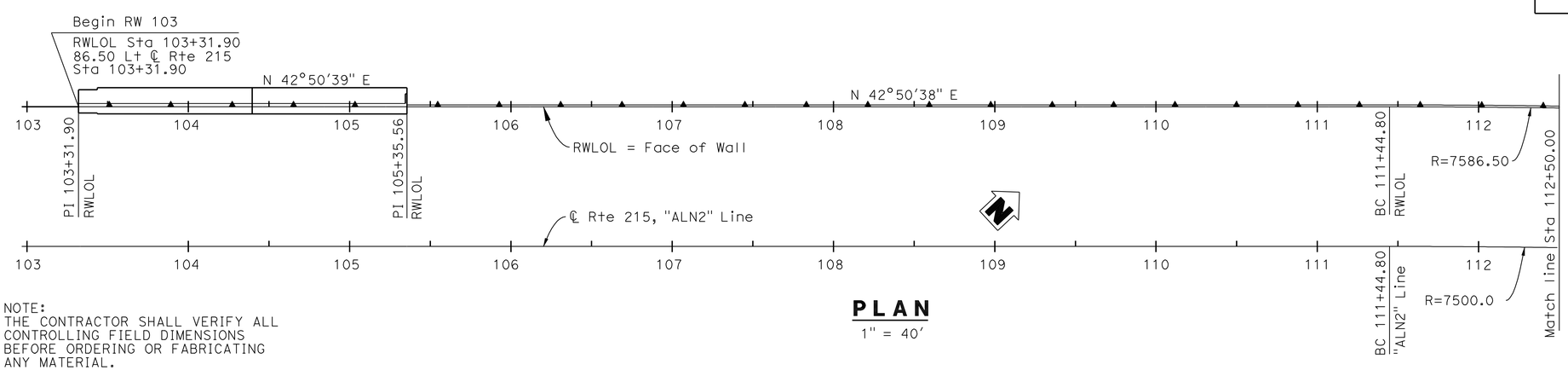

PLAN

1" = 40'

CURVE DATA
R=7586.50'
Δ=06°40'02"
T=441.84'
L=882.80'

For "Design Data", and "Standard Plans", see "GENERAL PLAN NO. 2" Sheet.

NOTE:
THE CONTRACTOR SHALL VERIFY ALL CONTROLLING FIELD DIMENSIONS BEFORE ORDERING OR FABRICATING ANY MATERIAL.

DANIEL T. ADAMS
DESIGN ENGINEER

	BY	CHECKED
DESIGN	M. Vo	C. Duan
DETAILS	D. Wooten/G. Hallstrom	C. Duan
QUANTITIES	A. McPhee	F. Chen

LOAD & RESISTANCE FACTOR DESIGN — LIVE LOADING: HL93 W/"LOW-BOY"; PERMIT DESIGN VEHICLE
LAYOUT — BY M. Vo — CHECKED C. Duan
SPECIFICATIONS — BY J. Corrado — CHECKED PLANS AND SPECS COMPARED J. Corrado

ORIGINAL SCALE IN INCHES FOR REDUCED PLANS 0 1 2 3

STATE OF CALIFORNIA
DEPARTMENT OF TRANSPORTATION

DIVISION OF ENGINEERING SERVICES
STRUCTURE DESIGN
DESIGN BRANCH 10

BRIDGE NO. 54E0044
POST MILE 1.78

RETAINING WALL NO. 103
GENERAL PLAN NO. 1

UNIT: 3589
PROJECT NUMBER & PHASE: 08000005061
CONTRACT NO.: 08-0M9401

DISREGARD PRINTS BEARING EARLIER REVISION DATES
REVISION DATES 8-18-11 3-28-12 1-04-12
SHEET 1 OF 25

FILE => 54e0044agp01.dgn

USERNAME => s12161 4 DATE PLOTTED => 18-APR-2012 TIME PLOTTED => 17:28

STRUCTURES DESIGN GENERAL PLAN SHEET (ENGLISH) (REV.09-01-10)

DIST	COUNTY	ROUTE	POST MILES TOTAL PROJECT	SHEET No.	TOTAL SHEETS
08	Riv,SBd	91,215	21.5/21.7, 43.2/45.2,0.0/5.1	1244	1743

REGISTERED CIVIL ENGINEER — DATE 4-06-12

4-16-12
PLANS APPROVAL DATE

REGISTERED PROFESSIONAL ENGINEER — LARRY WU No. C57035 Exp. 6-30-13 CIVIL — STATE OF CALIFORNIA

The State of California or its officers or agents shall not be responsible for the accuracy or completeness of electronic copies of this plan sheet.

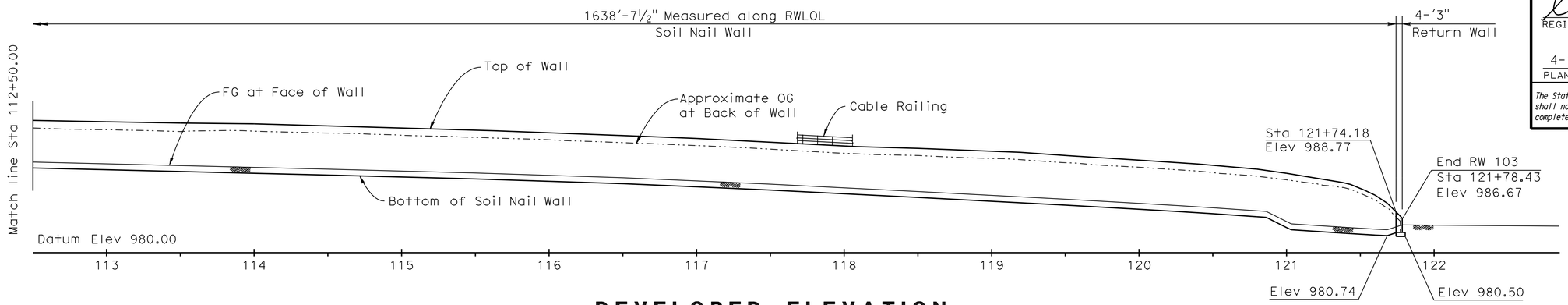

DEVELOPED ELEVATION

Vert. 1" = 20'
Horiz. 1" = 40'

DESIGN DATA

DESIGN (SOIL NAIL WALL):	Service Load Design Method per FHWA Geotechnical Engineering Circular No. 7 (FHWA O-IF-03-017) & Manual for Design and Construction Monitoring of Soil Nail Wall (FHWA-SA-96-069R)
LOADING CASE:	Slope with slope ratio of 2:1 Wind Load = 30 psf
SESIMIC LOAD	k_h = 0.2g k_v = 0.0g
SOIL:	k_{ae} = Mononobe-Okabe Method
REINFORCED CONCRETE:	f_c = 3.6 KSI f_y = 60 KSI
SHOTCRETE:	f_c = 3.6 KSI f_y = 60 KSI
STRUCTURAL STEEL:	ASTM Designation: A709, Grade 36 f_y = 36 KSI
SOIL NAILS:	ASTM Designation: A615, Grade 60 f_y = 60 KSI
SOIL PARAMETERS:	ϕ = 32° c = 0.0 lb/ft^2 γ = 125 lb/ft^3 Q_d = 3.30 k/ft (Design Pullout Resistance)
NOTE:	For Design Data of Retaining Wall Type 1 (Mod), see "RETAINING WALL TYPE 1 (MOD) DETAILS" sheet.

STANDARD PLANS DATED MAY 2006

A10A	ACRONYMS AND ABBREVIATIONS (SHEET 1 OF 2)
A10B	ACRONYMS AND ABBREVIATIONS (SHEET 2 OF 2)
A10C	SYMBOLS (SHEET 1 OF 2)
A10D	SYMBOLS (SHEET 2 OF 2)
B0-1	BRIDGE DETAILS
B0-3	BRIDGE DETAILS
B3-1	RETAINING WALL TYPE 1 H=4' THROUGH 30'
B3-8	RETAINING WALL DETAILS NO. 1
B3-9	RETAINING WALL DETAILS NO. 2
B11-47	CABLE RAILING

STANDARD PLAN SHEET NO.
DETAIL NO.

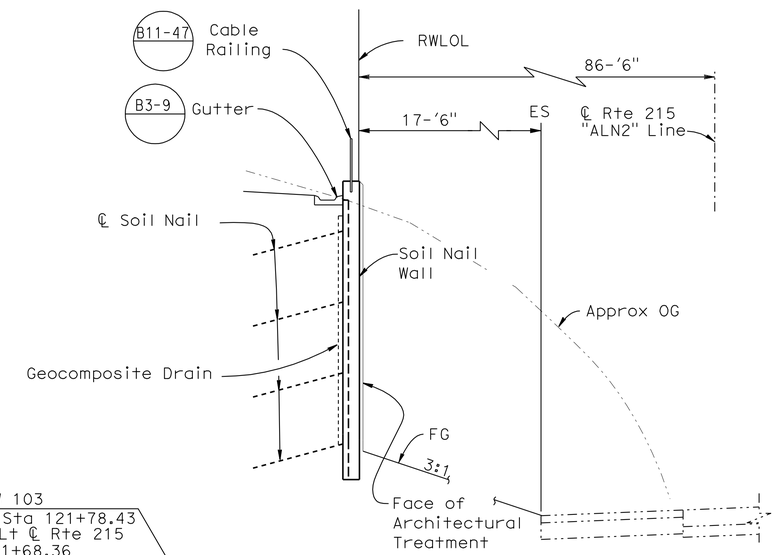

TYPICAL SECTION

¼" = 1'-0"
Sta 105+35.56 to Sta 121+74.18

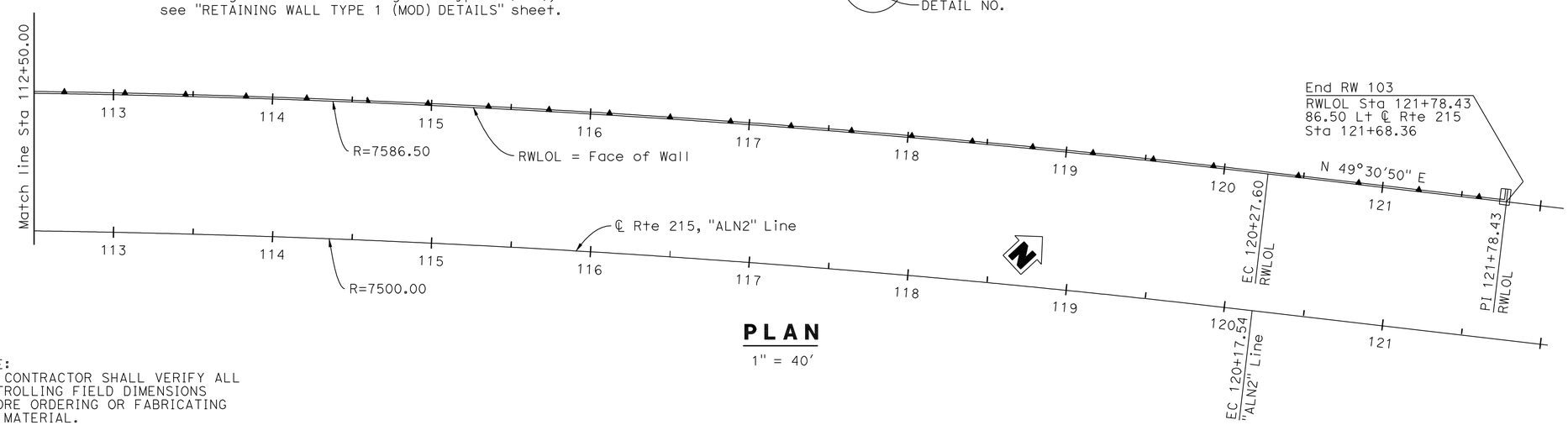

PLAN

1" = 40'

NOTE:
THE CONTRACTOR SHALL VERIFY ALL CONTROLLING FIELD DIMENSIONS BEFORE ORDERING OR FABRICATING ANY MATERIAL.

	BY	CHECKED
DESIGN	M. Vo	C. Duan
DETAILS	G. Hallstrom/D. Wooten	C. Duan
QUANTITIES	A. McPhee	F. Chen

STATE OF CALIFORNIA
DEPARTMENT OF TRANSPORTATION

DIVISION OF ENGINEERING SERVICES
STRUCTURE DESIGN
DESIGN BRANCH 10

BRIDGE NO. 54E0044
POST MILE 1.78

RETAINING WALL NO. 103
GENERAL PLAN NO. 2

STRUCTURES DESIGN DETAIL SHEET (ENGLISH) (REV. 09-01-10)

ORIGINAL SCALE IN INCHES FOR REDUCED PLANS 0 1 2 3

UNIT: 3589
PROJECT NUMBER & PHASE: 08000005061
CONTRACT NO.: 08-0M9401

DISREGARD PRINTS BEARING EARLIER REVISION DATES

REVISION DATES: 8-18-11 2-16-12 1-04-12

SHEET 2 OF 25

FILE => 54e0044agp02.dgn

USERNAME => s124496 DATE PLOTTED => 14-JUN-2012 TIME PLOTTED => 08:16

DIST	COUNTY	ROUTE	POST MILES TOTAL PROJECT	SHEET No.	TOTAL SHEETS
08	Riv,SBd	91,215	21.5/21.7, 43.2/45.2,0.0/5.1	1245	1743

REGISTERED CIVIL ENGINEER 4-06-12 DATE

4-16-12
PLANS APPROVAL DATE

REGISTERED PROFESSIONAL ENGINEER LARRY WU No. C57035 Exp. 6-30-13 CIVIL STATE OF CALIFORNIA

The State of California or its officers or agents shall not be responsible for the accuracy or completeness of electronic copies of this plan sheet.

NOTES:

1. Test nail locations are at midway between production nails. The exact location of the proof test nails to be determined in the field by the Engineer.
2. Contractor shall adjust the concrete gutter to meet the gutter flow line.
3. Cable Railing is not shown for clarity.
4. For "Section C-C", see "RETAINING WALL TYPE 1 (MOD) DETAILS" sheet.

LEGEND:

○ Indicates location of Production Nail assembly.

⊠ Indicates location of Test Nail assembly.

-·-LE# Indicates Soil Nail Profile Line.

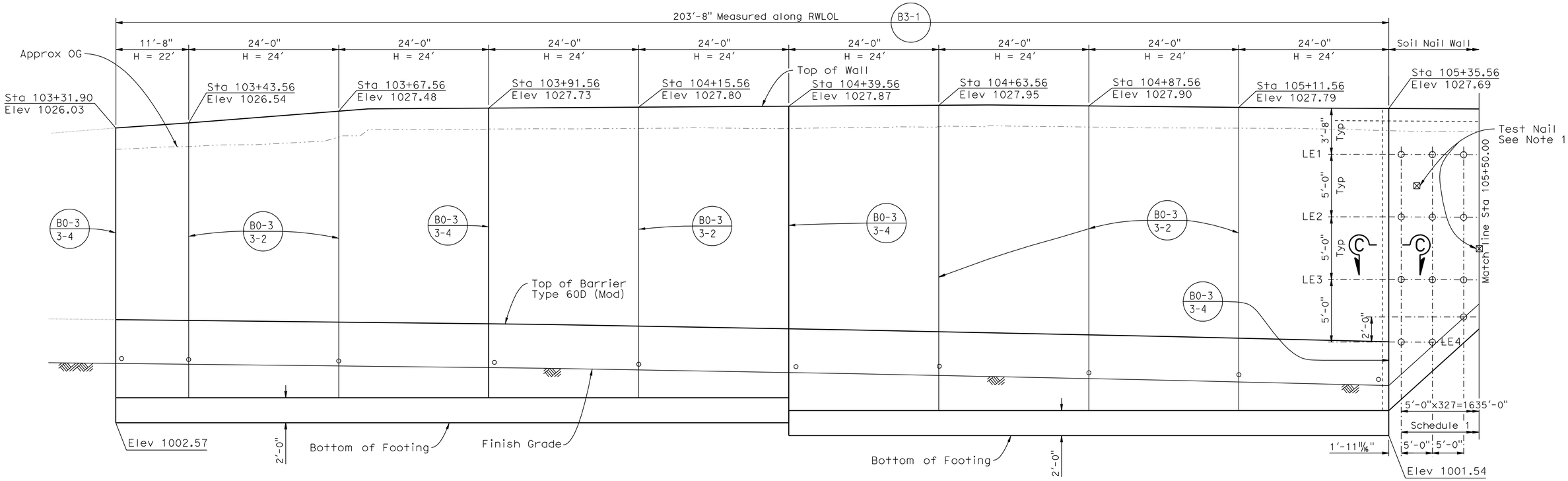

ELEVATION

Horiz: 1/8" = 1'-0"
Vert: 1/4" = 1'-0"

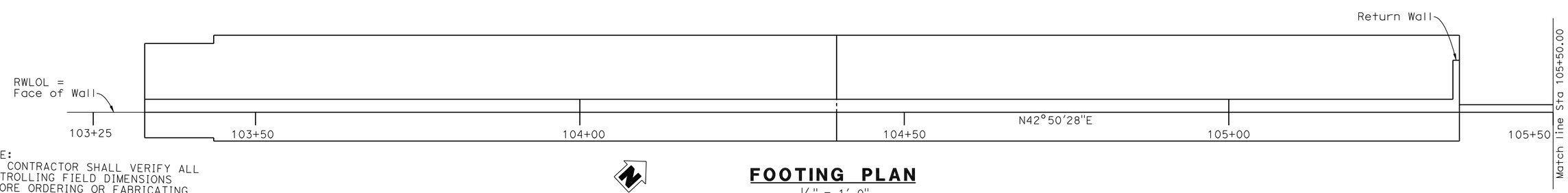

NOTE:
THE CONTRACTOR SHALL VERIFY ALL CONTROLLING FIELD DIMENSIONS BEFORE ORDERING OR FABRICATING ANY MATERIAL.

FOOTING PLAN

1/8" = 1'-0"

	BY	CHECKED
DESIGN	M. Vo	C. Duan
DETAILS	G. Hallstrom	C. Duan
QUANTITIES	A. McPhee	F. Chen

STATE OF CALIFORNIA
DEPARTMENT OF TRANSPORTATION

DIVISION OF ENGINEERING SERVICES
STRUCTURE DESIGN
DESIGN BRANCH 10

BRIDGE NO. 54E0044
POST MILE 1.78

RETAINING WALL NO. 103
STRUCTURE PLAN NO. 1

STRUCTURES DESIGN DETAIL SHEET (ENGLISH) (REV. 09-01-10)

ORIGINAL SCALE IN INCHES FOR REDUCED PLANS 0 1 2 3

UNIT: 3589
PROJECT NUMBER & PHASE: 08000005061
CONTRACT NO.: 08-0M9401

DISREGARD PRINTS BEARING EARLIER REVISION DATES

REVISION DATES 8-15-11 10-14-11 1-05-12 3-12-12

SHEET 3 OF 25

FILE => 54e0044csp03.dgn

USERNAME => s124496 DATE PLOTTED => 14-JUN-2012 TIME PLOTTED => 06:16

DIST	COUNTY	ROUTE	POST MILES TOTAL PROJECT	SHEET No.	TOTAL SHEETS
08	Riv,SBd	91,215	21.5/21.7, 43.2/45.2,0.0/5.1	1246	1743

REGISTERED CIVIL ENGINEER 4-06-12 DATE

4-16-12
PLANS APPROVAL DATE

REGISTERED PROFESSIONAL ENGINEER LARRY WU No. C57035 Exp. 6-30-13 CIVIL STATE OF CALIFORNIA

The State of California or its officers or agents shall not be responsible for the accuracy or completeness of electronic copies of this plan sheet.

NOTES:

1. Test nail locations are at midway between production nails. The exact location of the proof test nails to be determined in the field by the Engineer.
2. Contractor shall adjust the concrete gutter to meet the gutter flow line.
3. Cable Railing is not shown for clarity.

LEGEND:

O Indicates location of Production Nail assembly.

⊠ Indicates location of Test Nail assembly.

—·—LE# Indicates Soil Nail Profile Line.

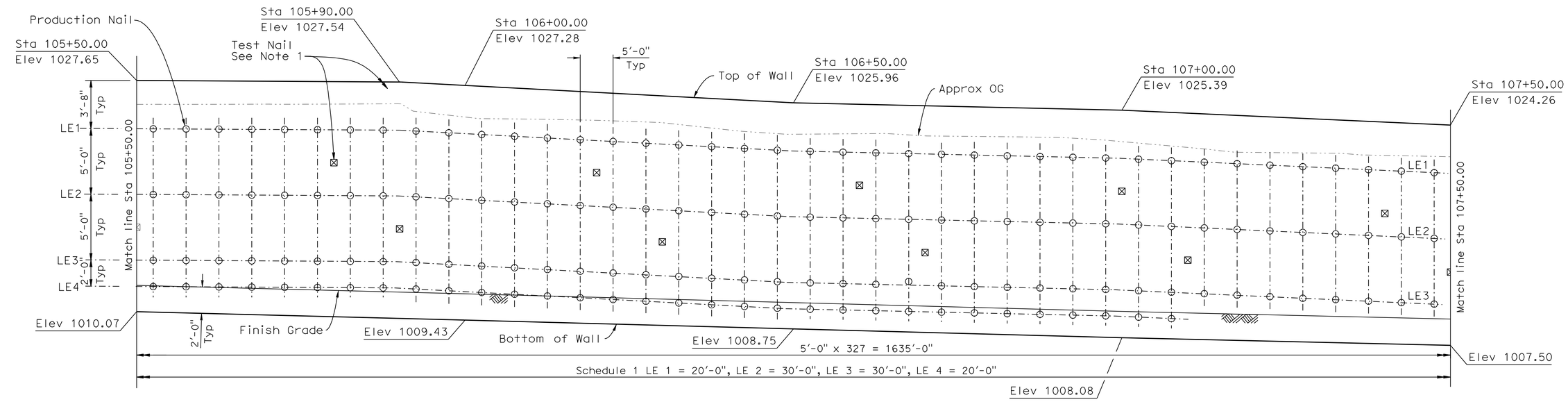

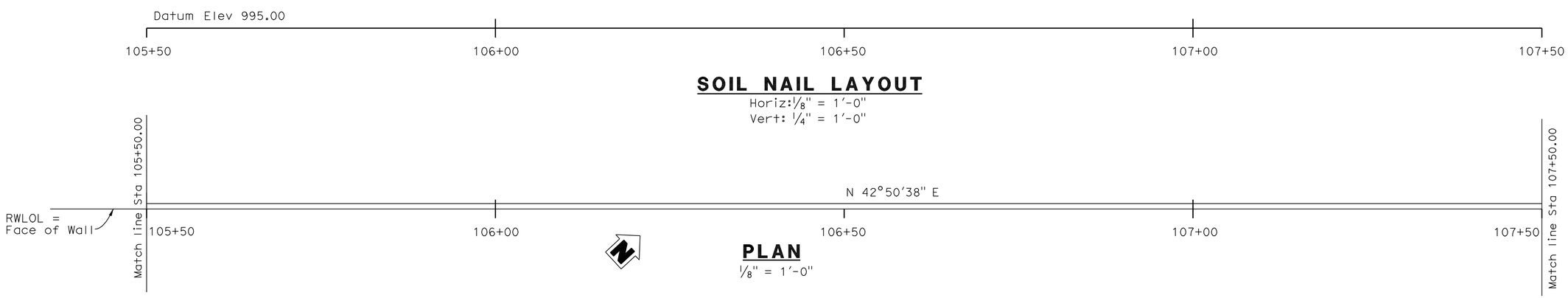

SOIL NAIL LAYOUT

Horiz: 1/8" = 1'-0"
Vert: 1/4" = 1'-0"

PLAN

1/8" = 1'-0"

NOTE:
THE CONTRACTOR SHALL VERIFY ALL CONTROLLING FIELD DIMENSIONS BEFORE ORDERING OR FABRICATING ANY MATERIAL.

	BY	CHECKED
DESIGN	M. Vo	C. Duan
DETAILS	G. Hallstrom	C. Duan
QUANTITIES	A. McPhee	F. Chen

STATE OF CALIFORNIA
DEPARTMENT OF TRANSPORTATION

DIVISION OF ENGINEERING SERVICES
STRUCTURE DESIGN
DESIGN BRANCH 10

BRIDGE NO. 54E0044
POST MILE 1.78

RETAINING WALL NO. 103
STRUCTURE PLAN NO. 2

STRUCTURES DESIGN DETAIL SHEET (ENGLISH) (REV. 09-01-10)

ORIGINAL SCALE IN INCHES FOR REDUCED PLANS 0 1 2 3

UNIT: 3589
PROJECT NUMBER & PHASE: 08000005061
CONTRACT NO.: 08-0M9401

DISREGARD PRINTS BEARING EARLIER REVISION DATES

REVISION DATES 8-11-11 1-05-12 12-14-11

SHEET 4 OF 25

FILE => 54e0044csp04.dgn

USERNAME => s124496 DATE PLOTTED => 14-JUN-2012 TIME PLOTTED => 06:16

DIST	COUNTY	ROUTE	POST MILES TOTAL PROJECT	SHEET No.	TOTAL SHEETS
08	Riv,SBd	91,215	21.5/21.7, 43.2/45.2,0.0/5.1	1247	1743

REGISTERED CIVIL ENGINEER 4-06-12 DATE

4-16-12
PLANS APPROVAL DATE

REGISTERED PROFESSIONAL ENGINEER LARRY WU No. C57035 Exp. 6-30-13 CIVIL STATE OF CALIFORNIA

The State of California or its officers or agents shall not be responsible for the accuracy or completeness of electronic copies of this plan sheet.

NOTES:

1. Test nail locations are at midway between production nails. The exact location of the proof test nails to be determined in the field by the Engineer.
2. Contractor shall adjust the concrete gutter to meet the gutter flow line.
3. Cable Railing is not shown for clarity.

LEGEND:

○ Indicates location of Production Nail assembly.

⊠ Indicates location of Test Nail assembly.

—·—LE# Indicates Soil Nail Profile Line.

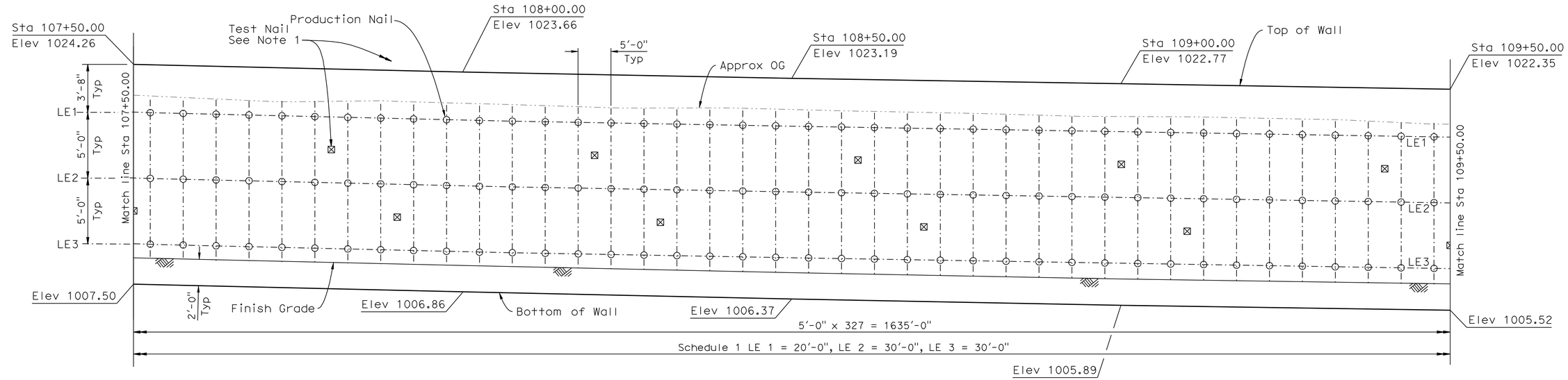

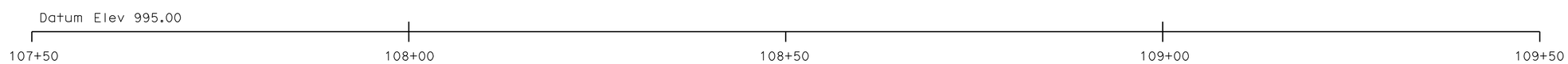

SOIL NAIL LAYOUT

Horiz: 1/8" = 1'-0"
Vert: 1/4" = 1'-0"

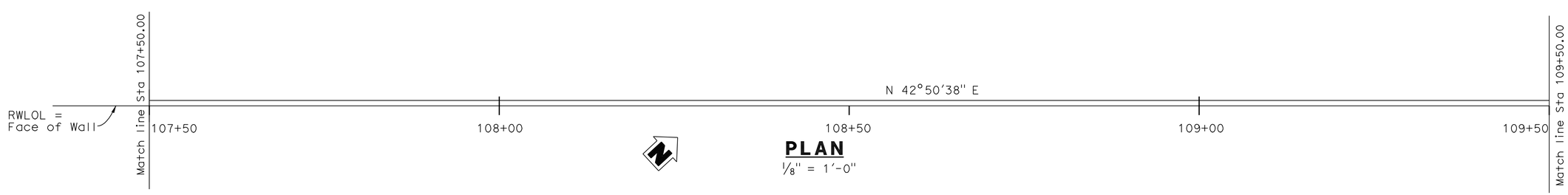

PLAN

1/8" = 1'-0"

NOTE:
THE CONTRACTOR SHALL VERIFY ALL CONTROLLING FIELD DIMENSIONS BEFORE ORDERING OR FABRICATING ANY MATERIAL.

	BY	CHECKED
DESIGN	M. Vo	C. Duan
DETAILS	G. Hallstrom	C. Duan
QUANTITIES	A. McPhee	F. Chen

STATE OF CALIFORNIA
DEPARTMENT OF TRANSPORTATION

DIVISION OF ENGINEERING SERVICES
STRUCTURE DESIGN
DESIGN BRANCH 10

BRIDGE NO. 54E0044
POST MILE 1.78

RETAINING WALL NO. 103
STRUCTURE PLAN NO. 3

STRUCTURES DESIGN DETAIL SHEET (ENGLISH) (REV. 09-01-10)

ORIGINAL SCALE IN INCHES FOR REDUCED PLANS 0 1 2 3

UNIT: 3589
PROJECT NUMBER & PHASE: 08000005061
CONTRACT NO.: 08-0M9401

DISREGARD PRINTS BEARING EARLIER REVISION DATES

REVISION DATES 8-15-11 10-14-11 12-14-11 1-05-12

SHEET 5 OF 25

FILE => 54e0044csp05.dgn

USERNAME => s124496 DATE PLOTTED => 14-JUN-2012 TIME PLOTTED => 06:16

DIST	COUNTY	ROUTE	POST MILES TOTAL PROJECT	SHEET No.	TOTAL SHEETS
08	Riv,SBd	91,215	21.5/21.7, 43.2/45.2,0.0/5.1	1248	1743

REGISTERED CIVIL ENGINEER 4-06-12 DATE

4-16-12
PLANS APPROVAL DATE

REGISTERED PROFESSIONAL ENGINEER LARRY WU No. C57035 Exp. 6-30-13 CIVIL STATE OF CALIFORNIA

The State of California or its officers or agents shall not be responsible for the accuracy or completeness of electronic copies of this plan sheet.

NOTES:

1. Test nail locations are at midway between production nails. The exact location of the proof test nails to be determined in the field by the Engineer.
2. Contractor shall adjust the concrete gutter to meet the gutter flow line.
3. Cable Railing is not shown for Clarity.

LEGEND:

○ Indicates location of Production Nail assembly.

⊠ Indicates location of Test Nail assembly.

—·—LE# Indicates Soil Nail Profile Line.

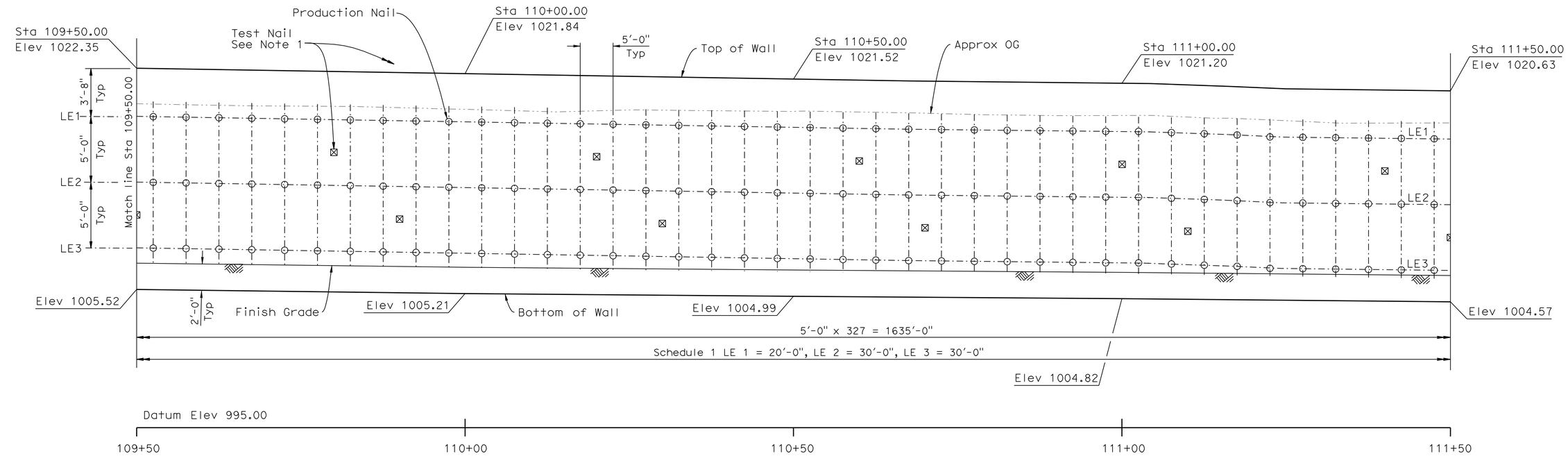

SOIL NAIL LAYOUT

Horiz: 1/8" = 1'-0"
Vert: 1/4" = 1'-0"

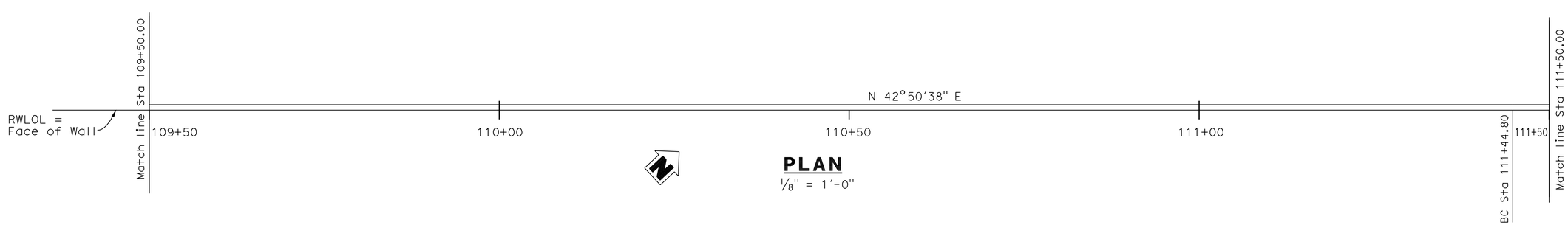

PLAN

1/8" = 1'-0"

NOTE:
THE CONTRACTOR SHALL VERIFY ALL CONTROLLING FIELD DIMENSIONS BEFORE ORDERING OR FABRICATING ANY MATERIAL.

	BY	CHECKED
DESIGN	M. Vo	C. Duan
DETAILS	G. Hallstrom	C. Duan
QUANTITIES	A. McPhee	F. Chen

STATE OF CALIFORNIA
DEPARTMENT OF TRANSPORTATION

DIVISION OF ENGINEERING SERVICES
STRUCTURE DESIGN
DESIGN BRANCH 10

BRIDGE NO. 54E0044
POST MILE 1.78

RETAINING WALL NO. 103
STRUCTURE PLAN NO. 4

STRUCTURES DESIGN DETAIL SHEET (ENGLISH) (REV. 09-01-10)

ORIGINAL SCALE IN INCHES FOR REDUCED PLANS 0 1 2 3

UNIT: 3589
PROJECT NUMBER & PHASE: 08000005061
CONTRACT NO.: 08-0M9401

DISREGARD PRINTS BEARING EARLIER REVISION DATES

REVISION DATES: 8-13-11 10-14-11 12-14-11 1-05-12

SHEET 6 OF 25

FILE => 54e0044csp06.dgn

USERNAME => s124496 DATE PLOTTED => 14-JUN-2012 TIME PLOTTED => 06:16

DIST	COUNTY	ROUTE	POST MILES TOTAL PROJECT	SHEET No.	TOTAL SHEETS
08	Riv,SBd	91,215	21.5/21.7, 43.2/45.2,0.0/5.1	1249	1743

REGISTERED CIVIL ENGINEER 4-06-12 DATE

4-16-12
PLANS APPROVAL DATE

REGISTERED PROFESSIONAL ENGINEER LARRY WU No. C57035 Exp. 6-30-13 CIVIL STATE OF CALIFORNIA

The State of California or its officers or agents shall not be responsible for the accuracy or completeness of electronic copies of this plan sheet.

NOTES:

1. Test nail locations are at midway between production nails. The exact location of the proof test nails to be determined in the field by the Engineer.
2. Contractor shall adjust the concrete gutter to meet the gutter flow line.
3. Cable Railing not shown for clarity.

LEGEND:

○ Indicates location of Production Nail assembly.

⊠ Indicates location of Test Nail assembly.

—·—LE# Indicates Soil Nail Profile Line.

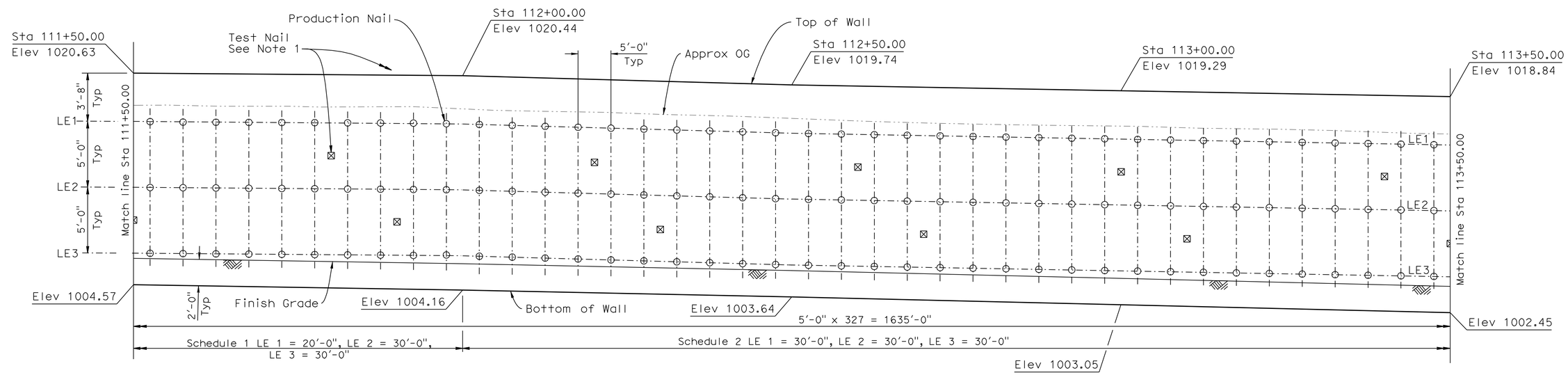

SOIL NAIL LAYOUT

Horiz: 1/8" = 1'-0"
Vert: 1/4" = 1'-0"

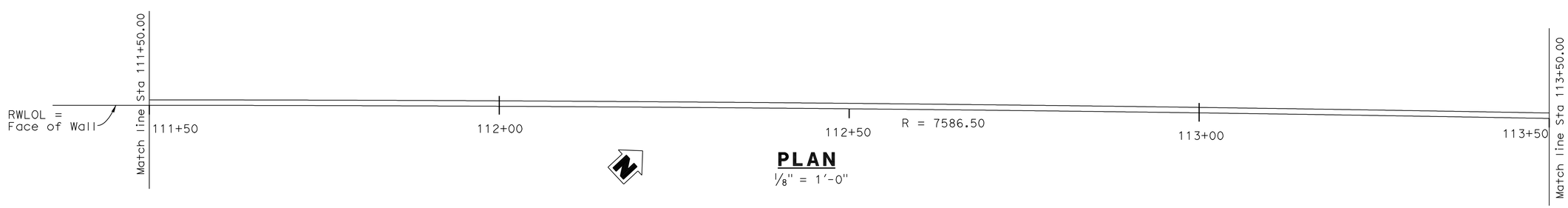

PLAN

1/8" = 1'-0"

NOTE:
THE CONTRACTOR SHALL VERIFY ALL CONTROLLING FIELD DIMENSIONS BEFORE ORDERING OR FABRICATING ANY MATERIAL.

	BY	CHECKED
DESIGN	M. Vo	C. Duan
DETAILS	G. Hallstrom	C. Duan
QUANTITIES	A. McPhee	F. Chen

STATE OF CALIFORNIA
DEPARTMENT OF TRANSPORTATION

DIVISION OF ENGINEERING SERVICES
STRUCTURE DESIGN
DESIGN BRANCH 10

BRIDGE NO. 54E0044
POST MILE 1.78

RETAINING WALL NO. 103
STRUCTURE PLAN NO. 5

STRUCTURES DESIGN DETAIL SHEET (ENGLISH) (REV. 09-01-10)

ORIGINAL SCALE IN INCHES FOR REDUCED PLANS 0 1 2 3

UNIT: 3589
PROJECT NUMBER & PHASE: 08000005061
CONTRACT NO.: 08-0M9401

DISREGARD PRINTS BEARING EARLIER REVISION DATES

REVISION DATES: 8-16-11 10-14-11 12-14-11 1-05-12

SHEET 7 OF 25

FILE => 54e0044csp07.dgn

USERNAME => s124496 DATE PLOTTED => 14-JUN-2012 TIME PLOTTED => 06:16

DIST	COUNTY	ROUTE	POST MILES TOTAL PROJECT	SHEET No.	TOTAL SHEETS
08	Riv,SBd	91,215	21.5/21.7, 43.2/45.2,0.0/5.1	1250	1743

REGISTERED CIVIL ENGINEER 4-06-12 DATE

4-16-12
PLANS APPROVAL DATE

REGISTERED PROFESSIONAL ENGINEER LARRY WU No. C57035 Exp. 6-30-13 CIVIL STATE OF CALIFORNIA

The State of California or its officers or agents shall not be responsible for the accuracy or completeness of electronic copies of this plan sheet.

NOTES:

1. Test nail locations are at midway between production nails. The exact location of the proof test nails to be determined in the field by the Engineer.
2. Contractor shall adjust the concrete gutter to meet the gutter flow line.
3. Cable Railing not shown for clarity.

LEGEND:

○ Indicates location of Production Nail assembly.

⊠ Indicates location of Test Nail assembly.

—·—LE# Indicates Soil Nail Profile Line.

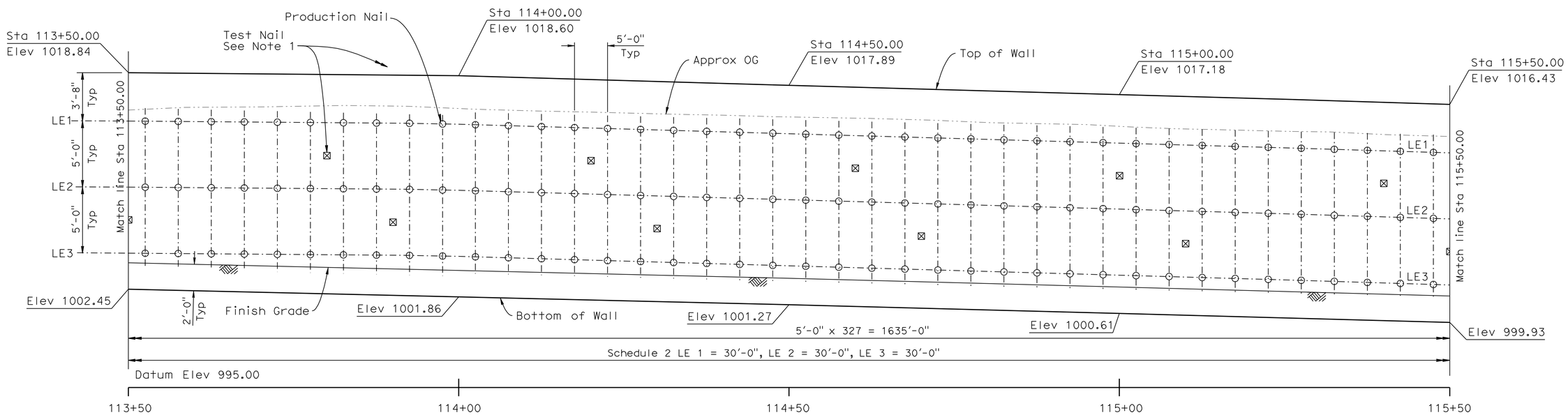

SOIL NAIL LAYOUT

Horiz: 1/8" = 1'-0"
Vert: 1/4" = 1'-0"

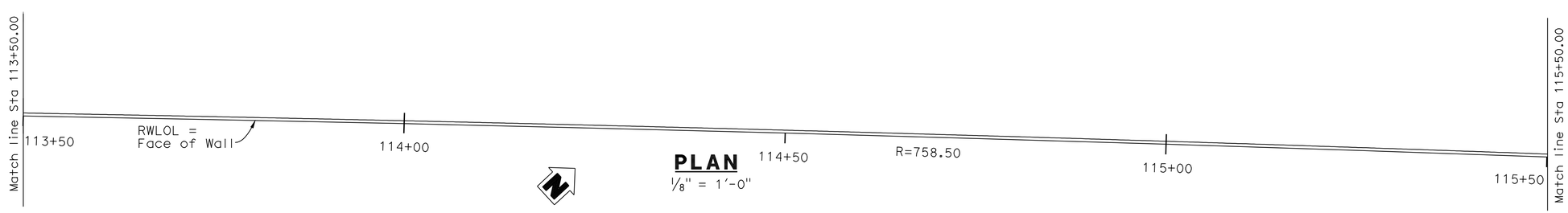

PLAN

1/8" = 1'-0"

NOTE:
THE CONTRACTOR SHALL VERIFY ALL CONTROLLING FIELD DIMENSIONS BEFORE ORDERING OR FABRICATING ANY MATERIAL.

	BY	CHECKED
DESIGN	M. Vo	C. Duan
DETAILS	G. Hallstrom	C. Duan
QUANTITIES	A. McPhee	F. Chen

STATE OF CALIFORNIA
DEPARTMENT OF TRANSPORTATION

DIVISION OF ENGINEERING SERVICES
STRUCTURE DESIGN
DESIGN BRANCH 10

BRIDGE NO. 54E0044
POST MILE 1.78

RETAINING WALL NO. 103
STRUCTURE PLAN NO. 6

STRUCTURES DESIGN DETAIL SHEET (ENGLISH) (REV. 09-01-10)

ORIGINAL SCALE IN INCHES FOR REDUCED PLANS 0 1 2 3

UNIT: 3589
PROJECT NUMBER & PHASE: 08000005061
CONTRACT NO.: 08-0M9401

DISREGARD PRINTS BEARING EARLIER REVISION DATES

REVISION DATES: 8-15-11 10-14-11 12-14-11 1-05-12

SHEET 8 OF 25

FILE => 54e0044csp08.dgn

USERNAME => s124496 DATE PLOTTED => 14-JUN-2012 TIME PLOTTED => 06:16

DIST	COUNTY	ROUTE	POST MILES TOTAL PROJECT	SHEET No.	TOTAL SHEETS
08	Riv,SBd	91,215	21.5/21.7, 43.2/45.2,0.0/5.1	1251	1743

REGISTERED CIVIL ENGINEER 4-06-12 DATE

4-16-12
PLANS APPROVAL DATE

REGISTERED PROFESSIONAL ENGINEER LARRY WU No. C57035 Exp. 6-30-13 CIVIL STATE OF CALIFORNIA

The State of California or its officers or agents shall not be responsible for the accuracy or completeness of electronic copies of this plan sheet.

NOTES:

1. Test nail locations are at midway between production nails. The exact location of the proof test nails to be determined in the field by the Engineer.
2. Contractor shall adjust the concrete gutter to meet the gutter flow line.
3. Cable Railing not shown for clarity.

LEGEND:

○ Indicates location of Production Nail assembly.

⊠ Indicates location of Test Nail assembly.

—·—LE# Indicates Soil Nail Profile Line.

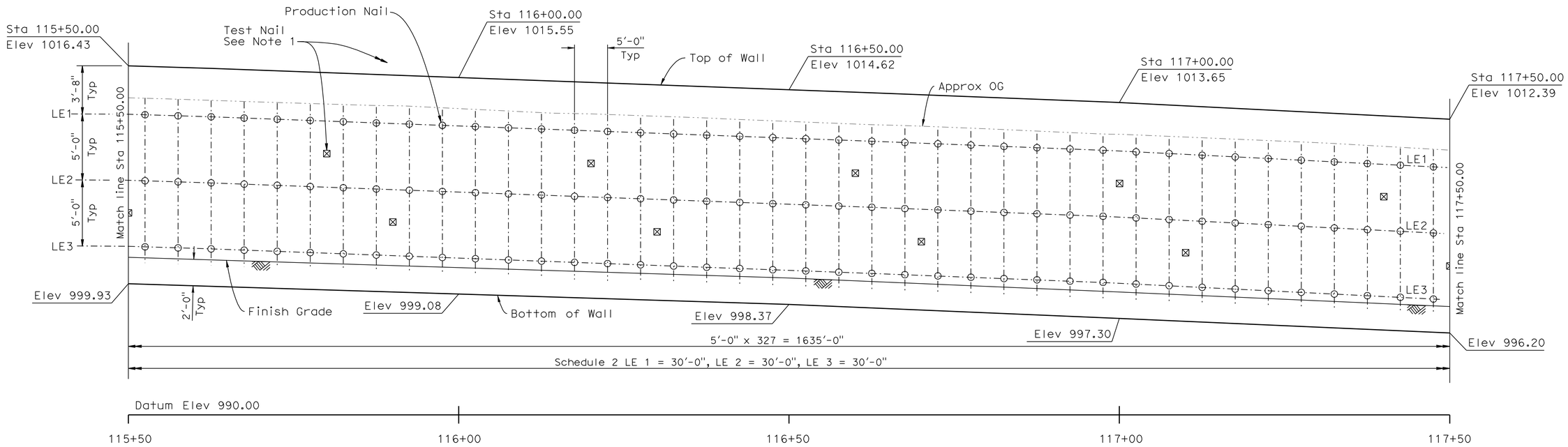

SOIL NAIL LAYOUT

Horiz: 1/8" = 1'-0"
Vert: 1/4" = 1'-0"

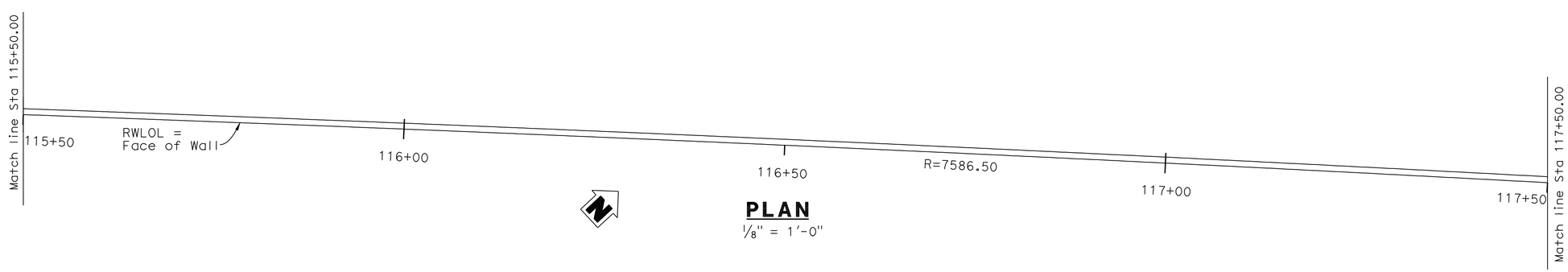

PLAN

1/8" = 1'-0"

NOTE:
THE CONTRACTOR SHALL VERIFY ALL CONTROLLING FIELD DIMENSIONS BEFORE ORDERING OR FABRICATING ANY MATERIAL.

	BY	CHECKED
DESIGN	M. Vo	C. Duan
DETAILS	G. Hallstrom	C. Duan
QUANTITIES	A. McPhee	F. Chen

STATE OF CALIFORNIA
DEPARTMENT OF TRANSPORTATION

DIVISION OF ENGINEERING SERVICES
STRUCTURE DESIGN
DESIGN BRANCH 10

BRIDGE NO. 54E0044
POST MILE 1.78

RETAINING WALL NO. 103
STRUCTURE PLAN NO. 7

STRUCTURES DESIGN DETAIL SHEET (ENGLISH) (REV. 09-01-10)

ORIGINAL SCALE IN INCHES FOR REDUCED PLANS 0 1 2 3

UNIT: 3589
PROJECT NUMBER & PHASE: 08000005061
CONTRACT NO.: 08-0M9401

DISREGARD PRINTS BEARING EARLIER REVISION DATES

REVISION DATES: 8-12-11 10-14-11 12-14-11 1-05-12

SHEET 9 OF 25

FILE => 54e0044csp09.dgn

USERNAME => s124496 DATE PLOTTED => 14-JUN-2012 TIME PLOTTED => 06:16

DIST	COUNTY	ROUTE	POST MILES TOTAL PROJECT	SHEET No.	TOTAL SHEETS
08	Riv,SBd	91,215	21.5/21.7, 43.2/45.2,0.0/5.1	1252	1743

REGISTERED CIVIL ENGINEER 4-06-12 DATE

4-16-12
PLANS APPROVAL DATE

REGISTERED PROFESSIONAL ENGINEER LARRY WU No. C57035 Exp. 6-30-13 CIVIL STATE OF CALIFORNIA

The State of California or its officers or agents shall not be responsible for the accuracy or completeness of electronic copies of this plan sheet.

NOTES:

1. Test nail locations are at midway between production nails. The exact location of the proof test nails to be determined in the field by the Engineer.
2. Contractor shall adjust the concrete gutter to meet the gutter flow line.
3. Cable Railing not shown for clarity.

LEGEND:

○ Indicates location of Production Nail assembly.

⊠ Indicates location of Test Nail assembly.

—·—LE# Indicates Soil Nail Profile Line.

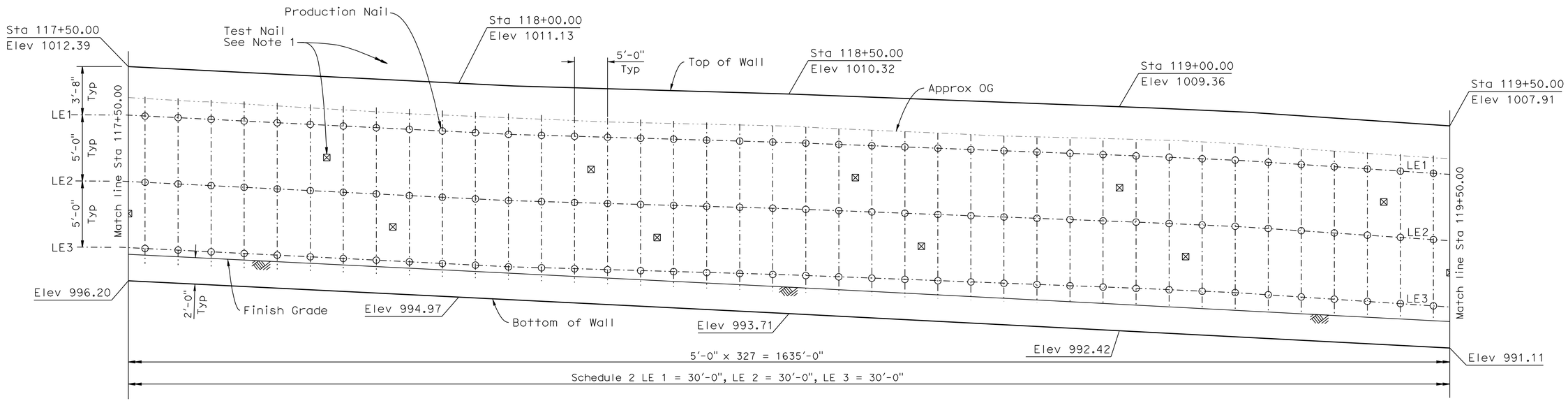

SOIL NAIL LAYOUT

Horiz: 1/8" = 1'-0"
Vert: 1/4" = 1'-0"

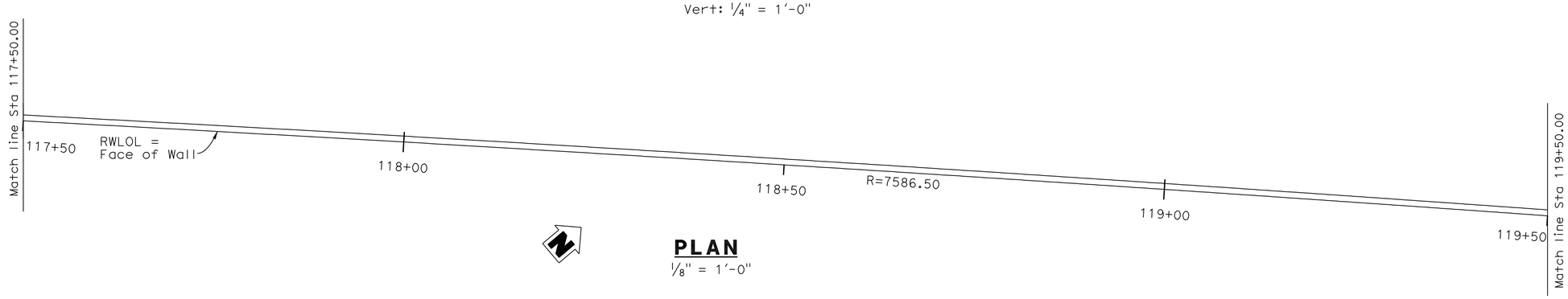

PLAN

1/8" = 1'-0"

NOTE:
THE CONTRACTOR SHALL VERIFY ALL CONTROLLING FIELD DIMENSIONS BEFORE ORDERING OR FABRICATING ANY MATERIAL.

	BY	CHECKED
DESIGN	M. Vo	C. Duan
DETAILS	G. Hallstrom	C. Duan
QUANTITIES	A. McPhee	F. Chen

STATE OF CALIFORNIA
DEPARTMENT OF TRANSPORTATION

DIVISION OF ENGINEERING SERVICES
STRUCTURE DESIGN
DESIGN BRANCH 10

BRIDGE NO. 54E0044
POST MILE 1.78

RETAINING WALL NO. 103
STRUCTURE PLAN NO. 8

STRUCTURES DESIGN DETAIL SHEET (ENGLISH) (REV. 09-01-10)

ORIGINAL SCALE IN INCHES FOR REDUCED PLANS 0 1 2 3

UNIT: 3589
PROJECT NUMBER & PHASE: 08000005061
CONTRACT NO.: 08-0M9401

DISREGARD PRINTS BEARING EARLIER REVISION DATES

REVISION DATES: 8-13-11 10-14-11 12-14-11 1-05-12

SHEET 10 OF 25

FILE => 54e0044csp10.dgn

USERNAME => s124496 DATE PLOTTED => 14-JUN-2012 TIME PLOTTED => 06:16

DIST	COUNTY	ROUTE	POST MILES TOTAL PROJECT	SHEET No.	TOTAL SHEETS
08	Riv,SBd	91,215	21.5/21.7, 43.2/45.2,0.0/5.1	1253	1743

REGISTERED CIVIL ENGINEER — DATE 4-06-12

4-16-12
PLANS APPROVAL DATE

REGISTERED PROFESSIONAL ENGINEER — LARRY WU No. C57035 Exp. 6-30-13 CIVIL — STATE OF CALIFORNIA

The State of California or its officers or agents shall not be responsible for the accuracy or completeness of electronic copies of this plan sheet.

NOTES:

1. Test nail locations are at midway between production nails. The exact location of the proof test nails to be determined in the field by the Engineer.
2. Contractor shall adjust the concrete gutter to meet the gutter flow line.
3. Cable Railing not shown for clarity.

LEGEND:

○ Indicates location of Production Nail assembly.

⊠ Indicates location of Test Nail assembly.

—·—LE# Indicates Soil Nail Profile Line.

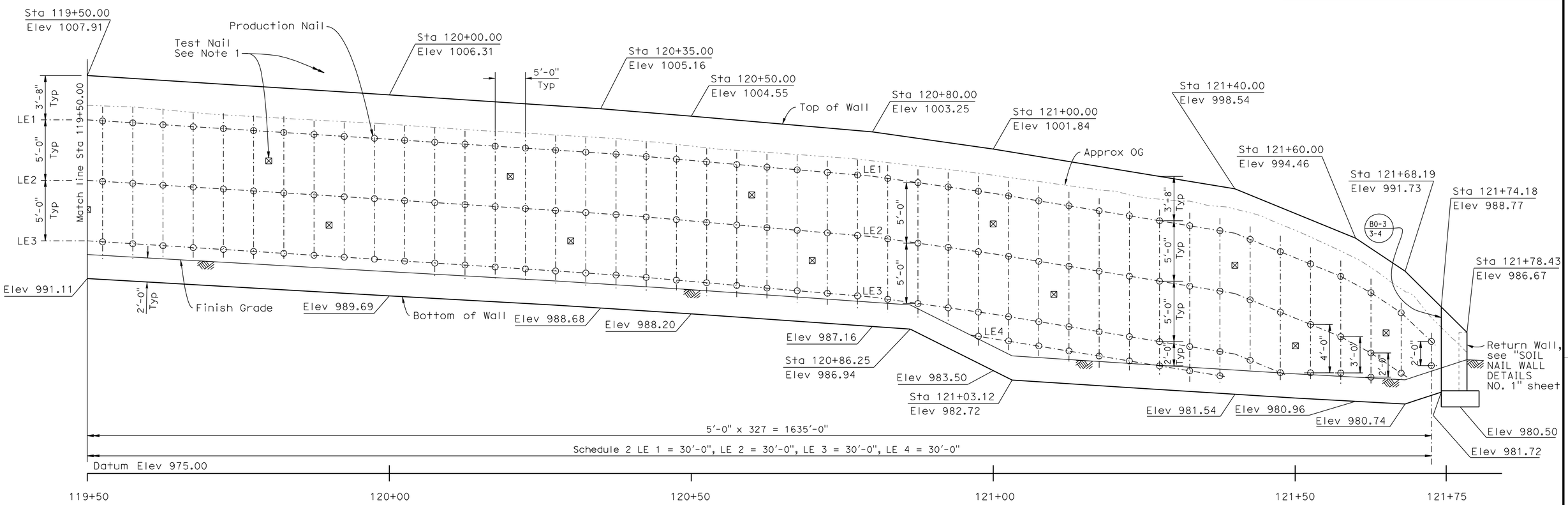

SOIL NAIL LAYOUT

Horiz: 1/8" = 1'-0"
Vert: 1/4" = 1'-0"

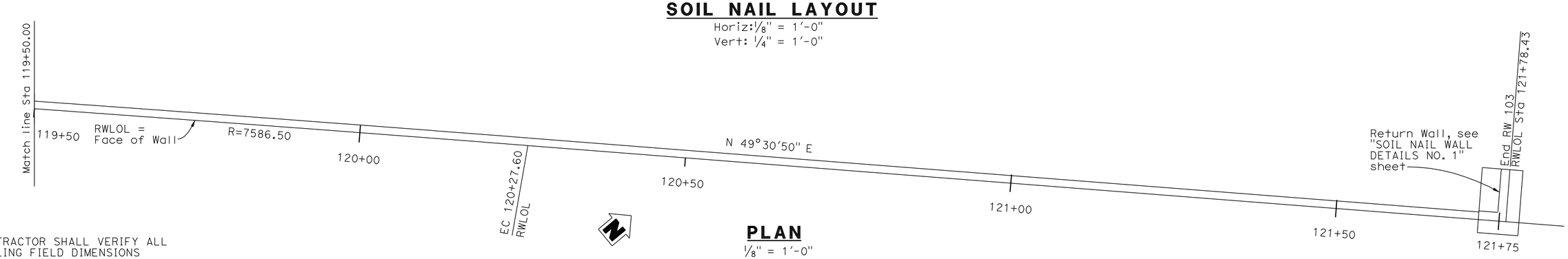

PLAN

1/8" = 1'-0"

NOTE:
THE CONTRACTOR SHALL VERIFY ALL CONTROLLING FIELD DIMENSIONS BEFORE ORDERING OR FABRICATING ANY MATERIAL.

	BY	CHECKED
DESIGN	M. Vo	C. Duan
DETAILS	G. Hallstrom	C. Duan
QUANTITIES	A. McPhee	F. Chen

STATE OF CALIFORNIA
DEPARTMENT OF TRANSPORTATION

DIVISION OF ENGINEERING SERVICES
STRUCTURE DESIGN
DESIGN BRANCH 10

BRIDGE NO. 54E0044
POST MILE 1.78

RETAINING WALL NO. 103
STRUCTURE PLAN NO. 9

STRUCTURES DESIGN DETAIL SHEET (ENGLISH) (REV. 09-01-10)

ORIGINAL SCALE IN INCHES FOR REDUCED PLANS 0 1 2 3

UNIT: 3589
PROJECT NUMBER & PHASE: 08000005061
CONTRACT NO.: 08-0M9401

DISREGARD PRINTS BEARING EARLIER REVISION DATES

REVISION DATES: 8-18-11 10-18-11 12-13-11 1-05-12

SHEET 11 OF 25

FILE => 54e0044csp11.dgn

USERNAME => s124496 DATE PLOTTED => 14-JUN-2012 TIME PLOTTED => 08:16

DIST	COUNTY	ROUTE	POST MILES TOTAL PROJECT	SHEET No.	TOTAL SHEETS
08	Riv,SBd	91,215	21.5/21.7, 43.2/45.2,0.0/5.1	1254	1743

REGISTERED CIVIL ENGINEER — DATE 4-06-12

4-16-12
PLANS APPROVAL DATE

REGISTERED PROFESSIONAL ENGINEER — LARRY WU No. C57035 Exp. 6-30-13 CIVIL — STATE OF CALIFORNIA

The State of California or its officers or agents shall not be responsible for the accuracy or completeness of electronic copies of this plan sheet.

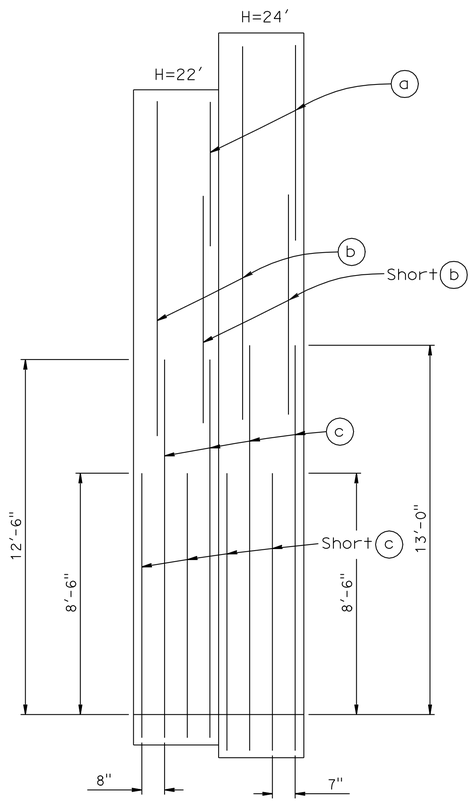

ELEVATION

No Scale

For details not shown, see B3-1

TABLE OF REINFORCING STEEL DIMENSIONS AND DATA		
Design H	22'	24'
W	14'-6"	16'-3"
C	3'-11"	4'-5"
B	10'-7"	11'-10"
F Spread footing	2'-0"	2'-0"
T	2'-0"	2'-0"
ⓐ Bars	#5 @32	#5 @28
ⓑ Bars	#8 @16	#8 @14
ⓒ Bars	#11@ 8	#11@ 7
ⓓ Bars	#11@ 8	#11@ 7
ⓔ Bars	#5 @ 8	#5 @ 7
ⓕ Bars	2-#5	2-#5
ⓖ Bars	#5 @16	#5 @14

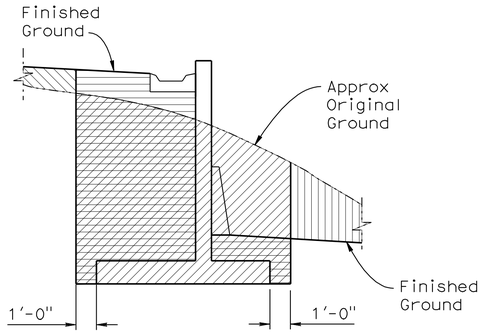

RETAINING WALL TYPE 1 (MOD) EXCAVATION & BACKFILL

NO SCALE

Sta 103+31.90 to Sta 105+35.56
Sta 121+74.18 to Sta 121+78.43

LEGEND:

- Structure Excavation
- Structure Backfill
- Roadway Excavation (see Roadway Plan)
- Roadway Backfill (see Roadway Plan)

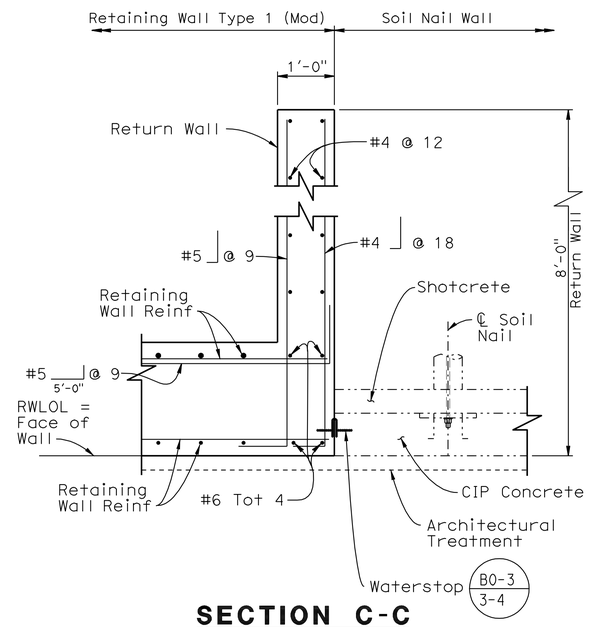

SECTION C-C

3/4" = 1'-0"

NOTE: For location of "Section C-C", see "STRUCTURE PLAN NO. 1" sheet.

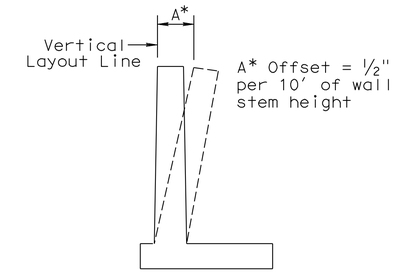

WALL OFFSET

No Scale

Values for offsetting forms to be determined by the Engineer

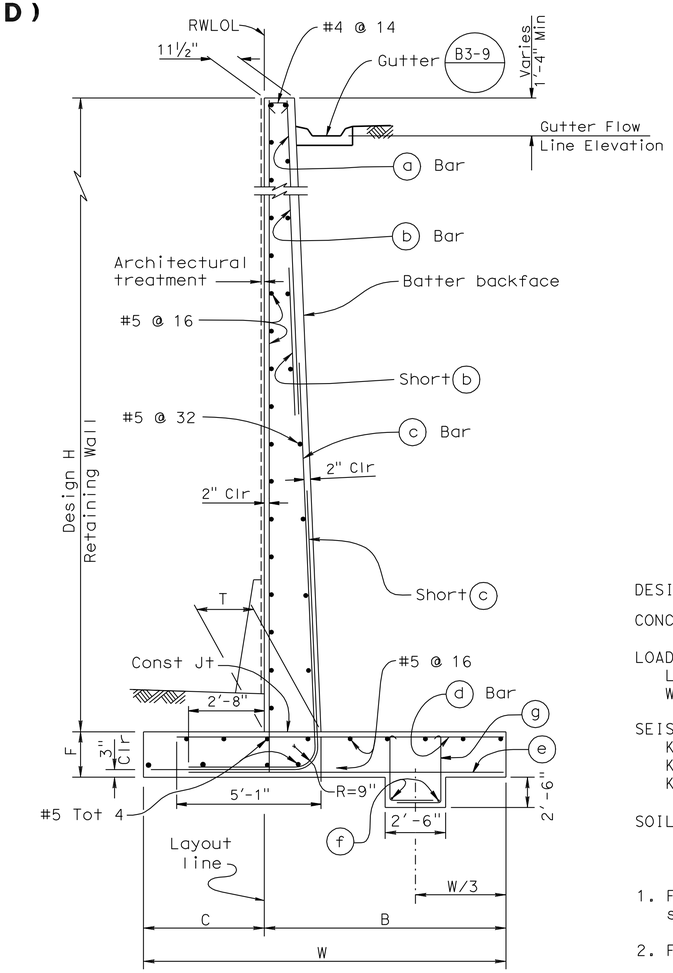

SPREAD FOOTING SECTION

No Scale

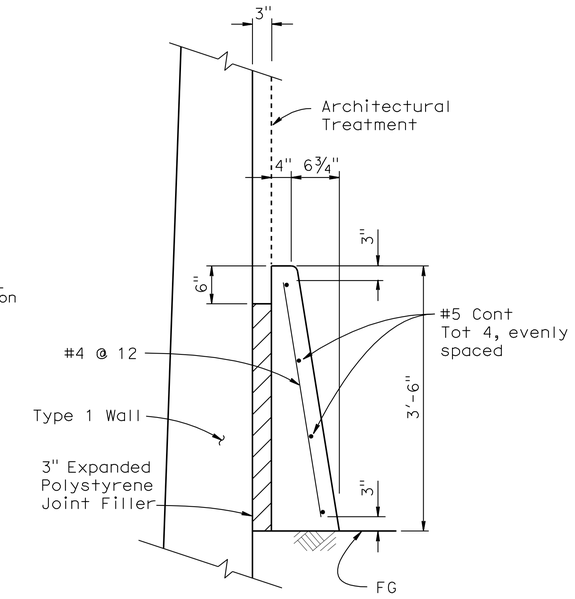

CONCRETE BARRIER (TYPE 60D MOD)

No scale

DESIGN DATA

DESIGN: AASHTO LFD

CONCRETE: Reinforced Concrete, f'c = 3600 psi
fy = 60,000 psi

LOADING CASE:
Level ground
Wind Load = 30 psf

SEISMIC LOAD: SOIL
Kh = 0.2g
Kv = 0.0
Kae : Mononobe-Okabe Method

SOIL: Ø = 32° γ = 125 pcf C=0

GENERAL NOTES

1. For retaining wall architectural treatment, see "ARCHITECTURAL TREATMENT DETAILS" sheet.
2. For details not shown and drainage notes, see B3-8
3. Footing cover, 1'-6" minimum.
4. Limit of no splicing rebars = 3 times the bottom thickness of the stem.

	BY	CHECKED
DESIGN	M. Vo	C. Duan
DETAILS	G. Hallstrom	C. Duan
QUANTITIES	A. McPhee	F. Chen

STATE OF CALIFORNIA
DEPARTMENT OF TRANSPORTATION

DIVISION OF ENGINEERING SERVICES
STRUCTURE DESIGN
DESIGN BRANCH 10

BRIDGE NO. 54E0044
POST MILE 1.78

RETAINING WALL NO. 103
RETAINING WALL TYPE 1 (MOD) DETAILS

STRUCTURES DESIGN DETAIL SHEET (ENGLISH) (REV. 09-01-10)

ORIGINAL SCALE IN INCHES FOR REDUCED PLANS 0 1 2 3

UNIT: 3589
PROJECT NUMBER & PHASE: 08000005061
CONTRACT NO.: 08-0M9401

DISREGARD PRINTS BEARING EARLIER REVISION DATES

REVISION DATES: 1-26-11 10-12-11 1-05-12 2-16-12

SHEET 12 OF 25

FILE => 54e0044grwdt12.dgn

USERNAME => s124496 DATE PLOTTED => 14-JUN-2012 TIME PLOTTED => 06:17

DIST	COUNTY	ROUTE	POST MILES TOTAL PROJECT	SHEET No.	TOTAL SHEETS
08	Riv,SBd	91,215	21.5/21.7, 43.2/45.2,0.0/5.1	1255	1743

REGISTERED CIVIL ENGINEER — DATE 4-06-12

4-16-12
PLANS APPROVAL DATE

REGISTERED PROFESSIONAL ENGINEER — LARRY WU No. C57035 Exp. 6-30-13 CIVIL — STATE OF CALIFORNIA

The State of California or its officers or agents shall not be responsible for the accuracy or completeness of electronic copies of this plan sheet.

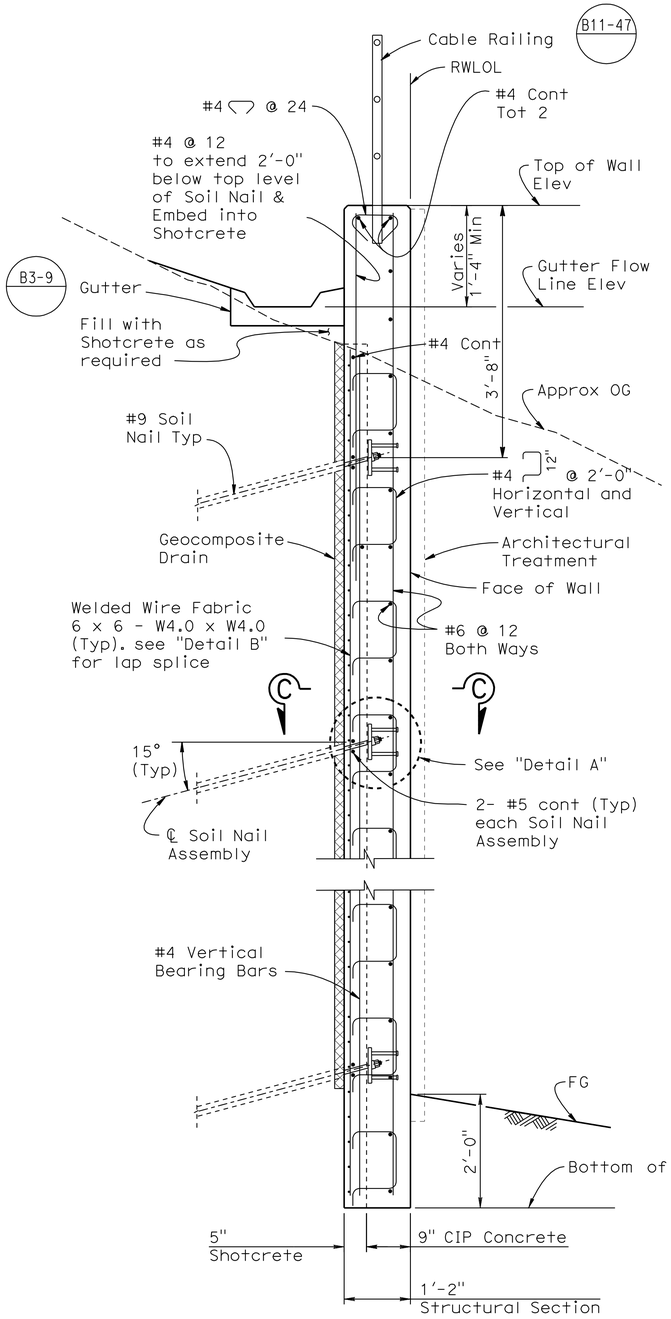

TYPICAL SECTION

3/4" = 1'-0"

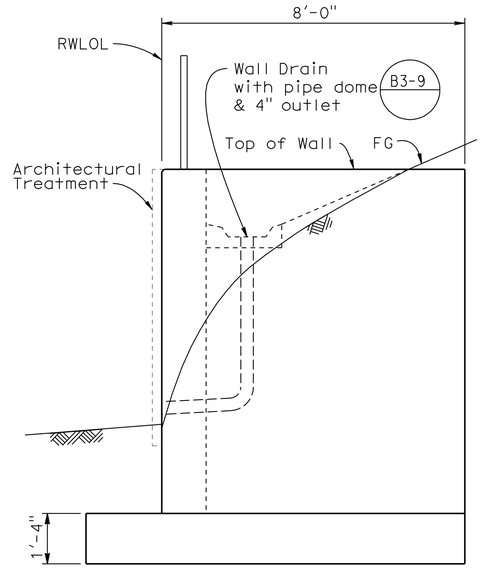

RETURN WALL ELEVATION

NO SCALE

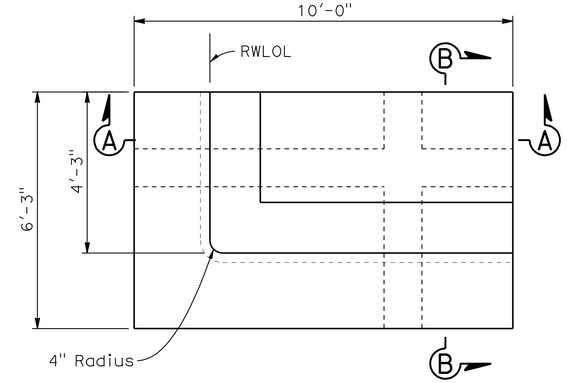

RETURN WALL PLAN

1/2" = 1'-0"

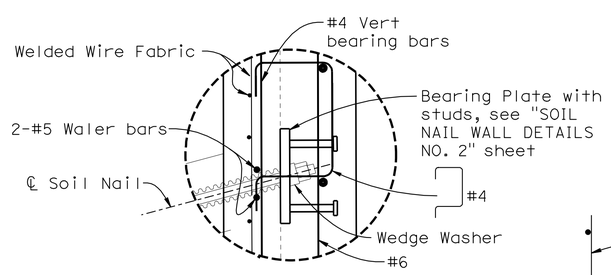

DETAIL A

1½" = 1'-0"

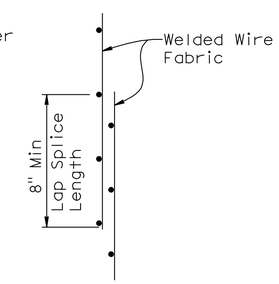

LAP SPLICE

DETAIL B

NO SCALE

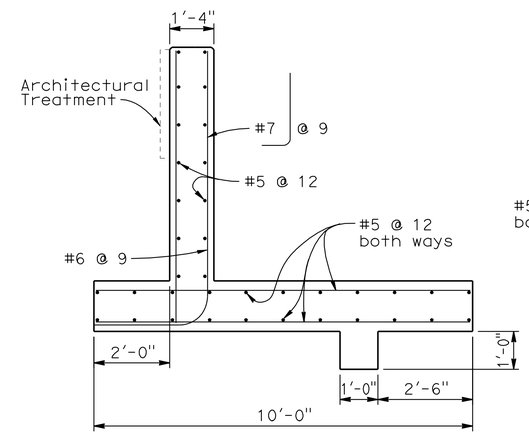

SECTION A-A

1/2" = 1'-0"

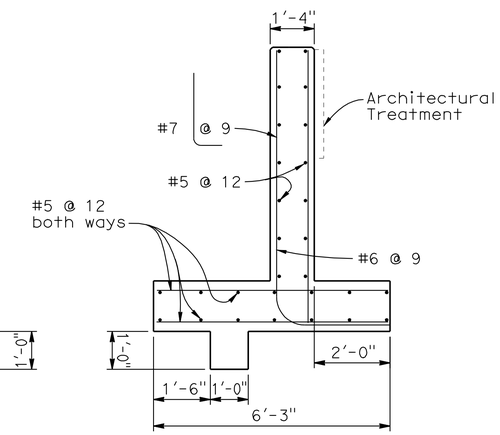

SECTION B-B

1/2" = 1'-0"

NOTES:

1. Bottom of wall to be placed against undisturbed material.
2. For Horizontal and Vertical Soil Nail spacing see "STRUCTURE PLAN NO. 1" through "STRUCTURE PLAN NO. 9" sheets.
3. For additional Soil Nail Details & Assemblies, see "SOIL NAIL WALL DETAILS NO. 2" sheet.
4. For Geocomposite Drain Details see "SOIL NAIL WALL DETAILS NO. 3" sheet.
5. For Architectural Treatment, see "ARCHITECTURAL TREATMENT DETAILS" sheet.
6. For soil nail rows that are discontinuous, extend waler bars a minimum of 5' beyond last soil nail.
7. For Section C-C, see "SOIL NAIL WALL DETAILS NO. 2" sheet.

	BY	CHECKED
DESIGN	M. Vo	C. Duan
DETAILS	G. Hallstrom	C. Duan
QUANTITIES	A. McPhee	F. Chen

STATE OF CALIFORNIA
DEPARTMENT OF TRANSPORTATION

DIVISION OF ENGINEERING SERVICES
STRUCTURE DESIGN
DESIGN BRANCH 10

BRIDGE NO. 54E0044
POST MILE 1.78

RETAINING WALL NO. 103
SOIL NAIL WALL DETAILS NO. 1

STRUCTURES DESIGN DETAIL SHEET (ENGLISH) (REV. 09-01-10)

ORIGINAL SCALE IN INCHES FOR REDUCED PLANS 0 1 2 3

UNIT: 3589
PROJECT NUMBER & PHASE: 08000005061
CONTRACT NO.: 08-0M9401

DISREGARD PRINTS BEARING EARLIER REVISION DATES

REVISION DATES: 11-10-11 12-14-11 1-05-12 2-16-12

SHEET 13 OF 25

FILE => 54e0044grwdt13.dgn

USERNAME => s124496 DATE PLOTTED => 14-JUN-2012 TIME PLOTTED => 08:17

DIST	COUNTY	ROUTE	POST MILES TOTAL PROJECT	SHEET No.	TOTAL SHEETS
08	Riv,SBd	91,215	21.5/21.7, 43.2/45.2,0.0/5.1	1256	1743

REGISTERED CIVIL ENGINEER — DATE 4-06-12

4-16-12
PLANS APPROVAL DATE

REGISTERED PROFESSIONAL ENGINEER — LARRY WU No. C57035 Exp. 6-30-13 CIVIL — STATE OF CALIFORNIA

The State of California or its officers or agents shall not be responsible for the accuracy or completeness of electronic copies of this plan sheet.

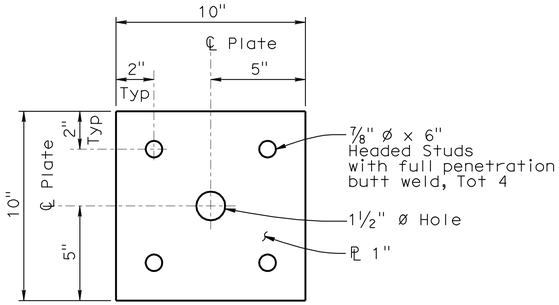

BEARING PLATE

3" = 1'-0"

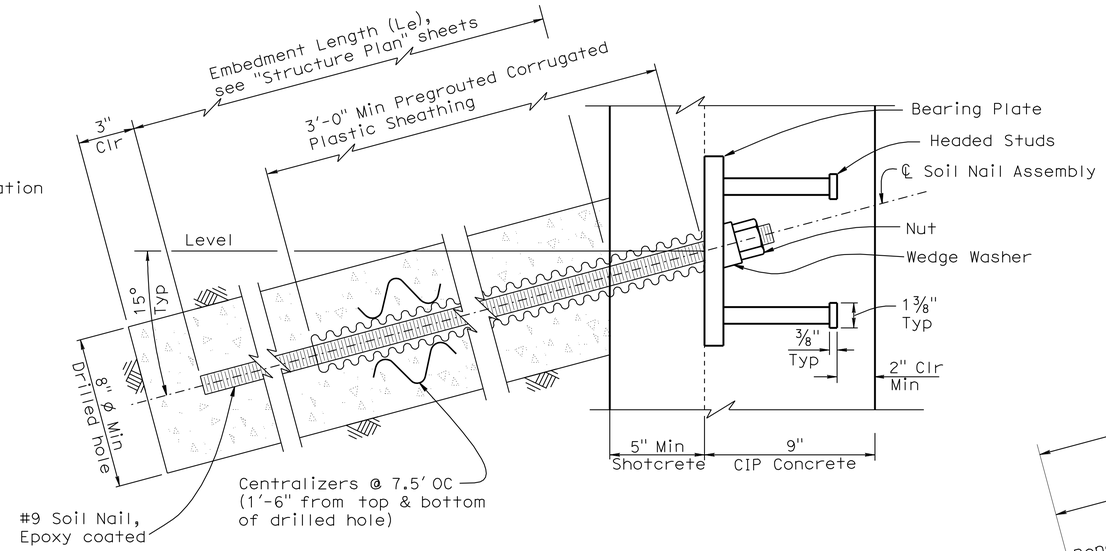

SOIL NAIL ASSEMBLY

3" = 1'-0"

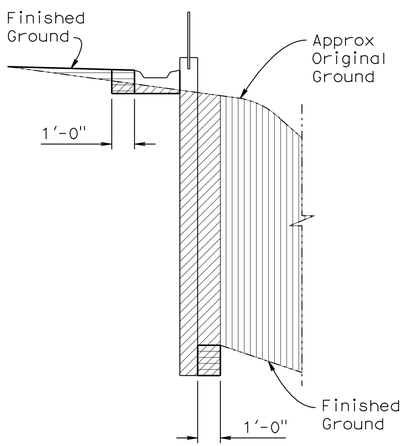

SOIL NAIL WALL EXCAVATION & BACKFILL

NO SCALE

Sta 105+35.56 to Sta 121+74.18

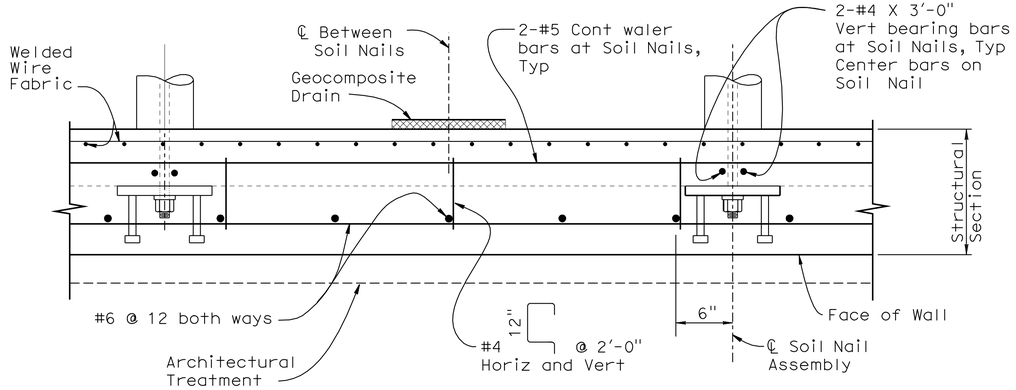

SECTION C-C

1 1/2" = 1'-0"

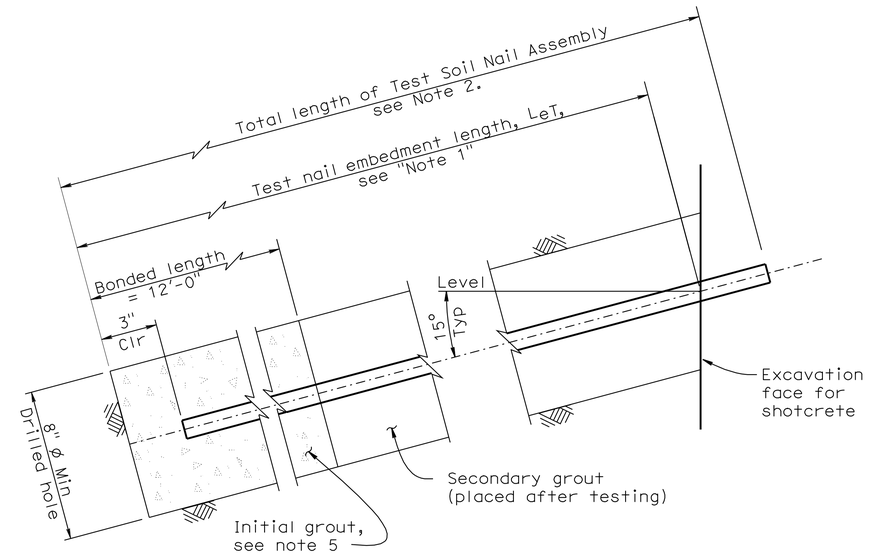

TEST SOIL NAIL ASSEMBLY

3" = 1'-0"

NOTES:

1. Embedment length L_{eT} of Test Nails equals two thirds of the embedment length L_e of adjacent soil nail assemblies, but not less than 12'-0".
2. Total length of Test Soil Nail equals embedment length plus the length required for jacking equipment.
3. For embedment length of Production Nails see "STRUCTURE PLAN NO. 1" through "STRUCTURE PLAN NO. 9" sheets.
4. Finished grout surface to be perpendicular to bar.
5. For location of Test Nails, see "STRUCTURE PLAN NO. 1" through "STRUCTURE PLAN NO. 9" sheets. Additional Test Nails will be installed and tested per special provisions.
6. For location of Section C-C, see "SOIL NAIL WALL DETAILS NO. 1" sheet.

LEGEND:

- Structure Excavation
- Structure Backfill
- Roadway Excavation (see Roadway Plan)
- Roadway Backfill (see Roadway Plan)

	BY	CHECKED
DESIGN	M. Vo	C. Duan
DETAILS	G. Hallstrom /D. Wooten	C. Duan
QUANTITIES	A. McPhee	F. Chen

STATE OF CALIFORNIA
DEPARTMENT OF TRANSPORTATION

DIVISION OF ENGINEERING SERVICES
STRUCTURE DESIGN
DESIGN BRANCH 10

BRIDGE NO. 54E0044
POST MILE 1.78

RETAINING WALL NO. 103
SOIL NAIL WALL DETAILS NO. 2

STRUCTURES DESIGN DETAIL SHEET (ENGLISH) (REV. 09-01-10)

ORIGINAL SCALE IN INCHES FOR REDUCED PLANS 0 1 2 3

UNIT: 3589
PROJECT NUMBER & PHASE: 08000005061
CONTRACT NO.: 08-0M9401

DISREGARD PRINTS BEARING EARLIER REVISION DATES

REVISION DATES 10-13-11 11-10-11 1-04-12 2-16-12

SHEET 14 OF 25

FILE => 54e0044grwdt14.dgn

USERNAME => s124396 DATE PLOTTED => 14-JUN-2012 TIME PLOTTED => 06:17

DIST	COUNTY	ROUTE	POST MILES TOTAL PROJECT	SHEET No.	TOTAL SHEETS
08	Riv,SBd	91,215	21.5/21.7, 43.2/45.2,0.0/5.1	1257	1743

Larry Wu 4-06-12
REGISTERED CIVIL ENGINEER DATE

4-16-12
PLANS APPROVAL DATE

REGISTERED PROFESSIONAL ENGINEER LARRY WU No. C57035 Exp. 6-30-13 CIVIL STATE OF CALIFORNIA

The State of California or its officers or agents shall not be responsible for the accuracy or completeness of electronic copies of this plan sheet.

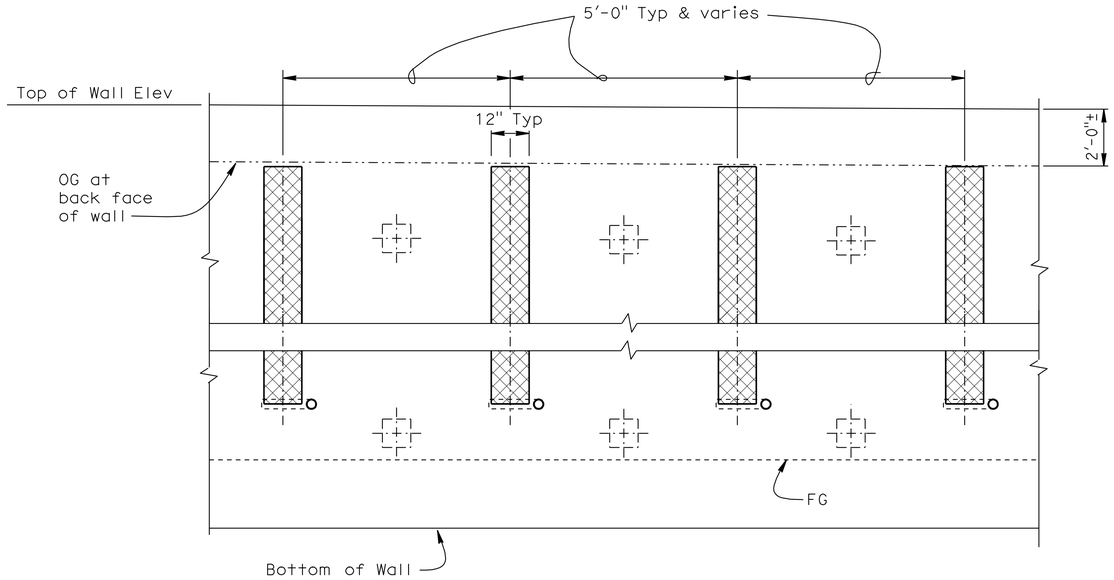

PART ELEVATION - GEOCOMPOSITE DRAIN

No scale

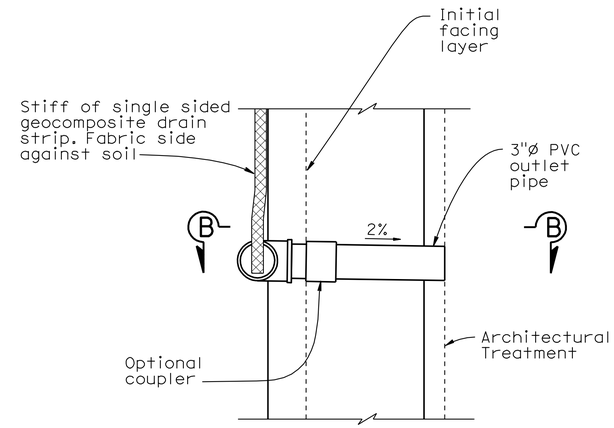

WALL DRAIN DETAIL AT WEEPHOLE OPTION B

No scale

NOTES:

1. Center Geocomposite drain between Soil Nail assemblies.
2. - Indicates Soil Nail Assembly.
3. 3" dia drain pipe to be placed 3" above finished grade, Typ.
4. Adjust Geocomposite Drain to clear Test Soil Nails.

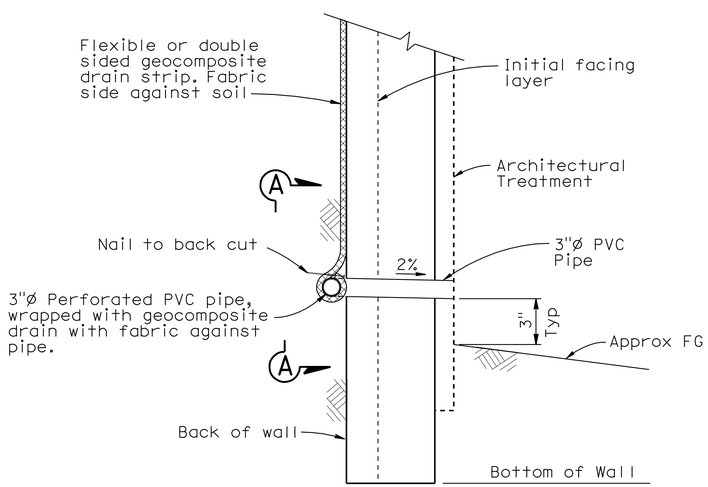

WALL DRAIN DETAIL AT WEEPHOLE OPTION A

No scale

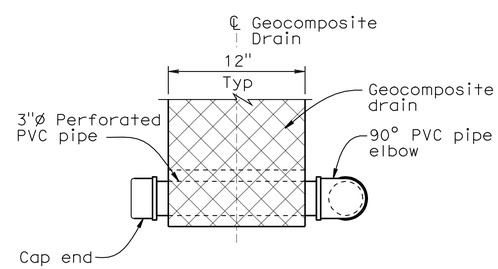

VIEW A-A

No scale

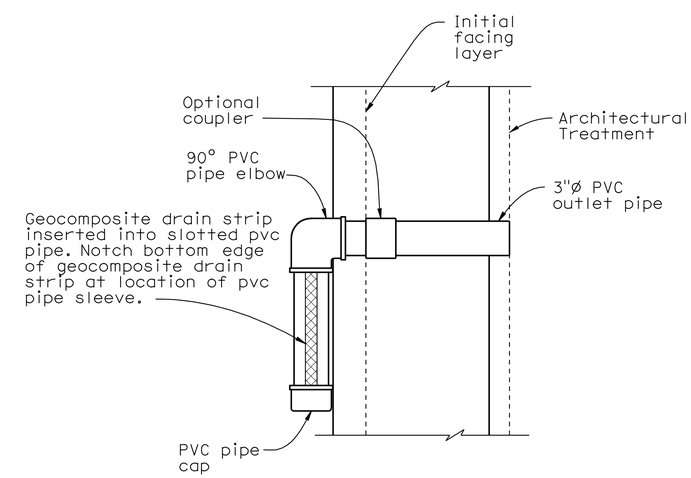

VIEW B-B

No Scale

DESIGN	BY M. Vo	CHECKED C. Duan	
DETAILS	BY G. Hallstrom/D. Wooten	CHECKED C. Duan	
QUANTITIES	BY A. McPhee	CHECKED F. Chen	

STATE OF CALIFORNIA DEPARTMENT OF TRANSPORTATION

DIVISION OF ENGINEERING SERVICES STRUCTURE DESIGN DESIGN BRANCH 10

BRIDGE NO. 54E0044
POST MILE 1.78

RETAINING WALL NO. 103
SOIL NAIL WALL DETAILS NO. 3

STRUCTURES DESIGN DETAIL SHEET (ENGLISH) (REV. 09-01-10)

ORIGINAL SCALE IN INCHES FOR REDUCED PLANS 0 1 2 3

UNIT: 3589
PROJECT NUMBER & PHASE: 08000005061 CONTRACT NO.: 08-0M9401

DISREGARD PRINTS BEARING EARLIER REVISION DATES

REVISION DATES 11-10-11 1-05-12

SHEET 15 OF 25

FILE => 54e0044grwdt15.dgn

USERNAME => s124496 DATE PLOTTED => 14-JUN-2012 TIME PLOTTED => 06:17

DIST	COUNTY	ROUTE	POST MILES TOTAL PROJECT	SHEET No.	TOTAL SHEETS
08	Riv,SBd	91,215	21.5/21.7, 43.2/45.2,0.0/5.1	1258	1743

LICENSED LANDSCAPE ARCHITECT — DATE 3-29-12

4-16-12
PLANS APPROVAL DATE

LICENSED LANDSCAPE ARCHITECT — RAY DESSELLE — No. 2916 — Exp. 11-30-13 — STATE OF CALIFORNIA

The State of California or its officers or agents shall not be responsible for the accuracy or completeness of electronic copies of this plan sheet.

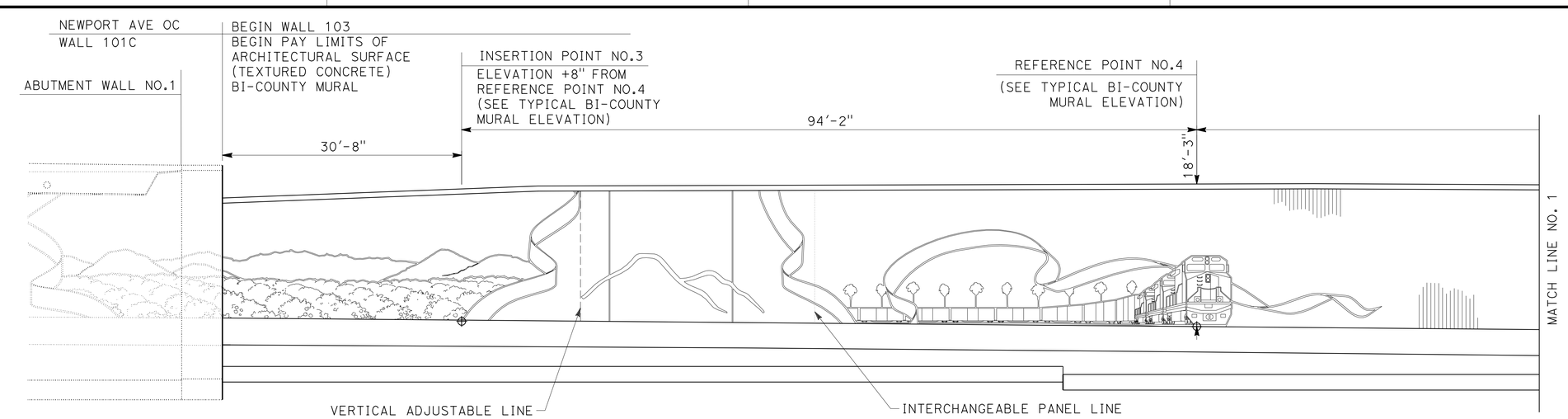

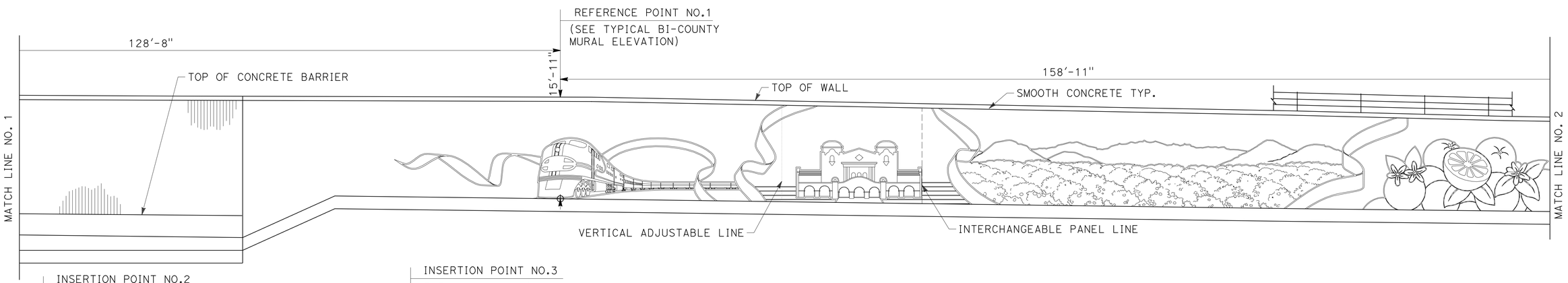

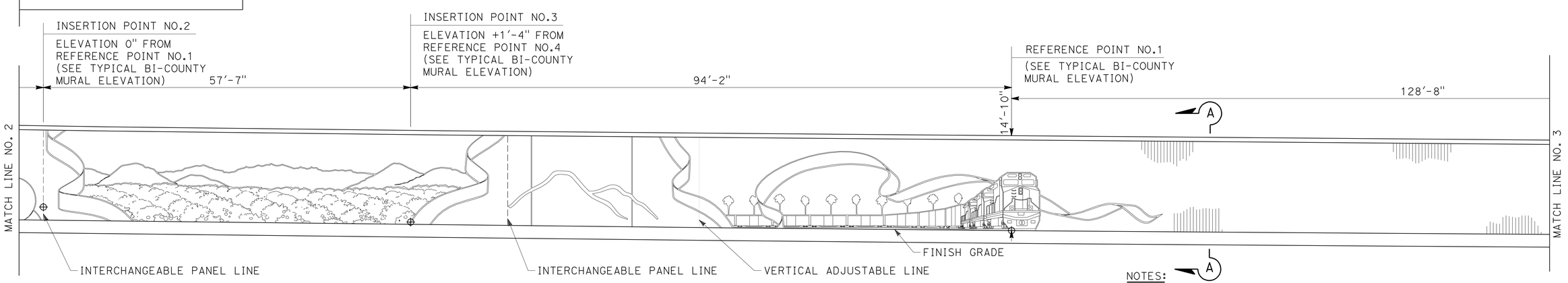

ELEVATION

SCALE: 1/8"=1'-0"

NOTES:

1. For Typical Bi-County Mural Elevation, see "ARCHITECTURAL SURFACE DETAILS NO. 1 & NO. 2" sheets in "RETAINING WALL NO. 40" Structure Plans.
2. For Section A-A, see "ARCHITECTURAL SURFACE DETAILS NO. 11" sheet in "RETAINING WALL NO. 40" Structure Plans.

THIS PLAN IS ACCURATE FOR ARCHITECTURAL TREATMENT WORK ONLY.

	BY	CHECKED
DESIGN	M. Hall/B. Fleming/B. Strout	M. Bishop/I. Tasabia
DETAILS	M. Bishop	M. Hall
QUANTITIES	A. McPhee	F. Chen

STATE OF CALIFORNIA
DEPARTMENT OF TRANSPORTATION

DIVISION OF ENGINEERING SERVICES
STRUCTURE DESIGN
DESIGN BRANCH 10

BRIDGE NO. 54E0044
POST MILE 1.78

RETAINING WALL NO. 103
ARCHITECTURAL SURFACE LAYOUT NO. 1

STRUCTURES DESIGN DETAIL SHEET (ENGLISH) (REV. 09-01-10)

ORIGINAL SCALE IN INCHES FOR REDUCED PLANS 0 1 2 3

UNIT: 3589
PROJECT NUMBER & PHASE: 08000005061
CONTRACT NO.: 08-0M9401

DISREGARD PRINTS BEARING EARLIER REVISION DATES

REVISION DATES

SHEET 16 OF 25

FILE => 54e0044s_asl016.dgn

USERNAME => s121614 DATE PLOTTED => 18-APR-2012 TIME PLOTTED => 17:31

Dist	COUNTY	ROUTE	POST MILES TOTAL PROJECT	SHEET No.	TOTAL SHEETS
08	Riv,SBd	91,215	21.5/21.7, 43.2/45.2,0.0/5.1	1259	1743

LICENSED LANDSCAPE ARCHITECT

4-16-12
PLANS APPROVAL DATE

THE STATE OF CALIFORNIA OR ITS OFFICERS OR AGENTS SHALL NOT BE RESPONSIBLE FOR THE ACCURACY OR COMPLETENESS OF SCANNED COPIES OF THIS PLAN SHEET.

LICENSED LANDSCAPE ARCHITECT
RAY A. DESSELLE, No. 2666
Signature
11/30/13
Renewal Date
03/29/12
Date
STATE OF CALIFORNIA

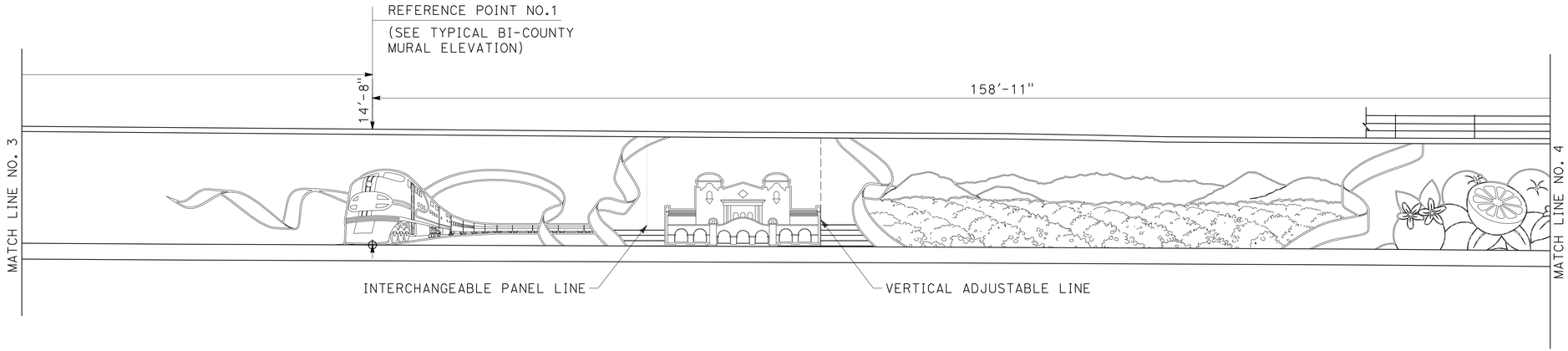

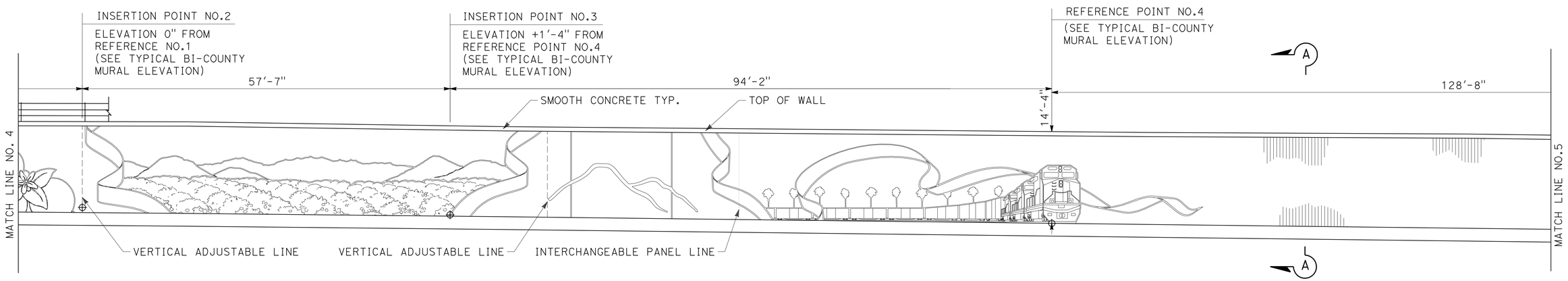

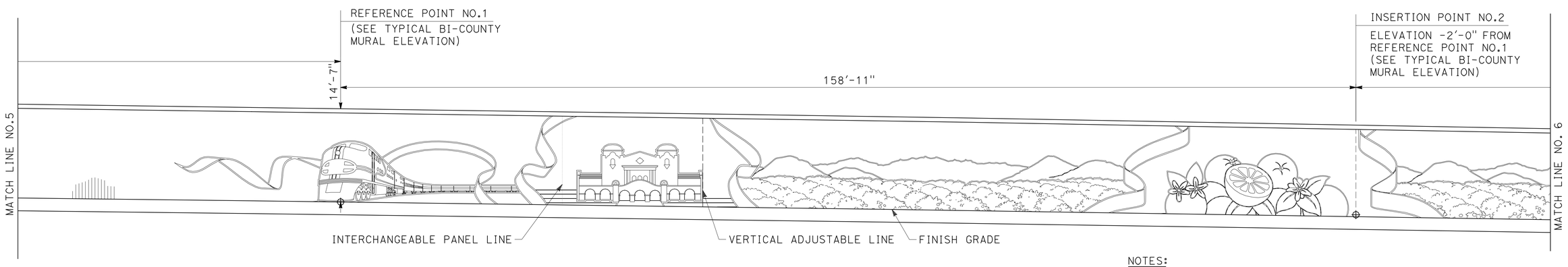

ELEVATION

SCALE: 1/8"=1'-0"

THIS PLAN IS ACCURATE FOR ARCHITECTURAL TREATMENT WORK ONLY.

NOTES:

1. For Typical Bi-County Mural Elevation, see "ARCHITECTURAL SURFACE DETAILS NO. 1 & NO. 2" sheets in "RETAINING WALL NO. 40" Structure Plans.
2. For Section A-A, see "ARCHITECTURAL SURFACE DETAILS NO. 11" sheet in "RETAINING WALL NO. 40" Structure Plans.

	BY	CHECKED
DESIGN	M. Hall/B. Fleming/B. Strout	M. Bishop/I.Tasabia
DETAILS	M. Bishop	M. Hall
QUANTITIES	A. McPhee	F. Chen

STATE OF CALIFORNIA
DEPARTMENT OF TRANSPORTATION

DIVISION OF ENGINEERING SERVICES
STRUCTURE DESIGN
DESIGN BRANCH 10

BRIDGE NO. 54E0044
POST MILE 1.78

RETAINING WALL NO. 103
ARCHITECTURAL SURFACE LAYOUT NO. 2

STRUCTURES DESIGN DETAIL SHEET (ENGLISH) (REV. 09-01-10)

ORIGINAL SCALE IN INCHES FOR REDUCED PLANS 0 1 2 3

UNIT: 3589
PROJECT NUMBER & PHASE: 08000005061
CONTRACT NO.: 08-0M9401

DISREGARD PRINTS BEARING EARLIER REVISION DATES

REVISION DATES

SHEET 17 OF 25

FILE => 54e0044sas1o17.dgn

USERNAME => s127614 DATE PLOTTED => 18-APR-2012 TIME PLOTTED => 17:31

Dist	COUNTY	ROUTE	POST MILES TOTAL PROJECT	SHEET No.	TOTAL SHEETS
08	Riv,SBd	91,215	21.5/21.7, 43.2/45.2,0.0/5.1	1260	1743

LICENSED LANDSCAPE ARCHITECT

4-16-12
PLANS APPROVAL DATE

THE STATE OF CALIFORNIA OR ITS OFFICERS OR AGENTS SHALL NOT BE RESPONSIBLE FOR THE ACCURACY OR COMPLETENESS OF SCANNED COPIES OF THIS PLAN SHEET.

LICENSED LANDSCAPE ARCHITECT
RAY J. DESSELLE, No. 2548
Signature
11/30/13
Renewal Date
03/29/12
Date
STATE OF CALIFORNIA

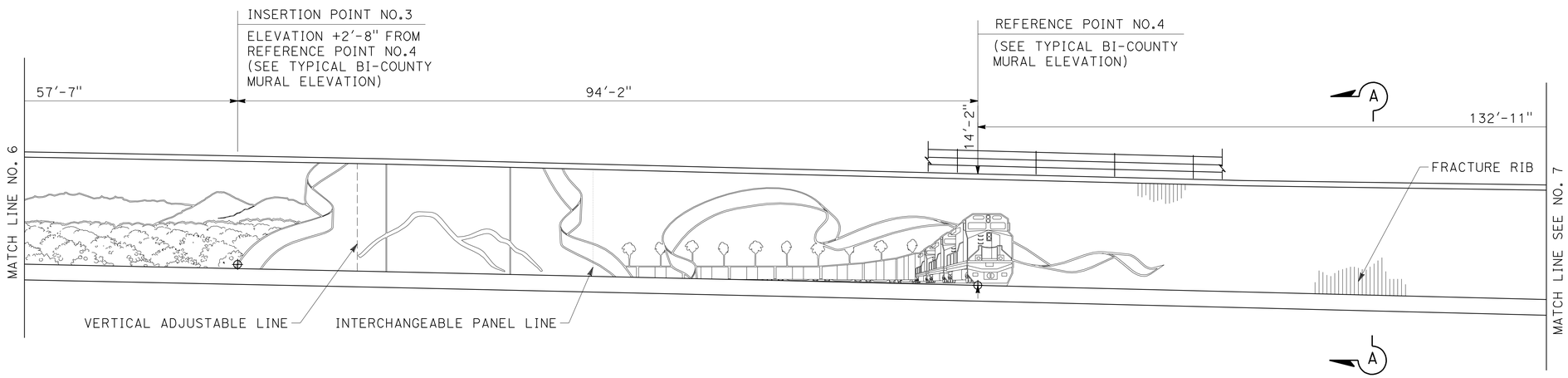

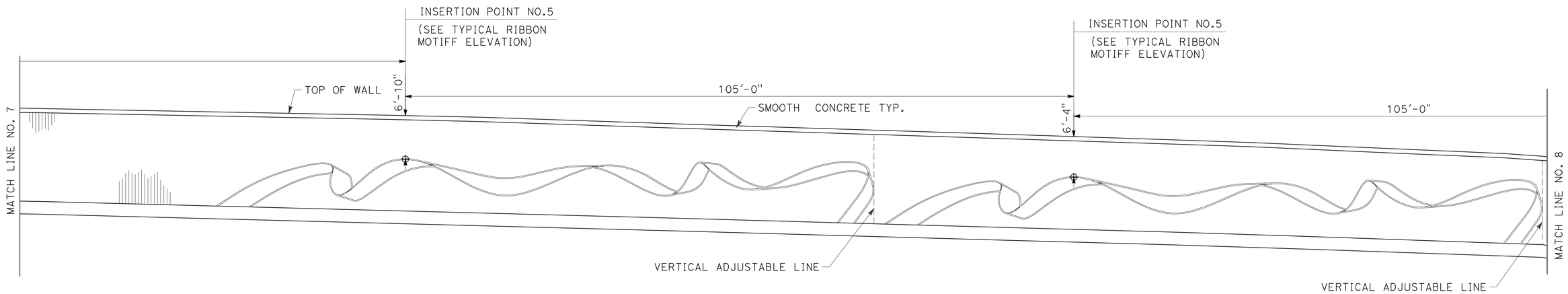

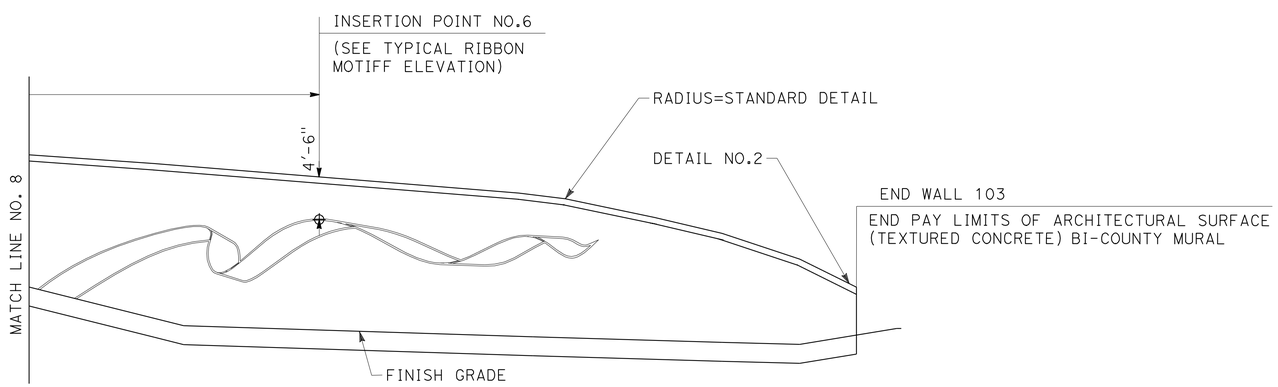

ELEVATION

SCALE: 1/8"=1'-0"

NOTES:

1. For Typical Bi-County Mural Elevation, see "ARCHITECTURAL SURFACE DETAILS NO. 1 & NO. 2" sheets in "RETAINING WALL NO. 40" Structure Plans.
2. For Section A-A, see "ARCHITECTURAL SURFACE DETAILS NO. 11" sheet in "RETAINING WALL NO. 40" Structure Plans.
3. For Typical Ribbon Motiff Elevation, see "ARCHITECTURAL SURFACE DETAILS NO. 3" sheet in "RETAINING WALL NO. 40" Structure Plans.
4. For Detail 3, see "ARCHITECTURAL SURFACE DETAILS NO. 13" in "RETAINING WALL NO. 40" Structure Plans.

THIS PLAN IS ACCURATE FOR ARCHITECTURAL TREATMENT WORK ONLY.

	BY	CHECKED
DESIGN	M. Hall/B. Fleming/B. Strout	M. Bishop/I.Tasabia
DETAILS	M. Bishop	M. Hall
QUANTITIES	A. McPhee	F. Chen

STATE OF CALIFORNIA
DEPARTMENT OF TRANSPORTATION

DIVISION OF ENGINEERING SERVICES
STRUCTURE DESIGN
DESIGN BRANCH 10

BRIDGE NO. 54E0044
POST MILE 1.78

RETAINING WALL NO. 103
ARCHITECTURAL SURFACE LAYOUT NO. 3

STRUCTURES DESIGN DETAIL SHEET (ENGLISH) (REV. 09-01-10)

ORIGINAL SCALE IN INCHES FOR REDUCED PLANS 0 1 2 3

UNIT: 3589
PROJECT NUMBER & PHASE: 08000005061
CONTRACT NO.: 08-0M9401

DISREGARD PRINTS BEARING EARLIER REVISION DATES

REVISION DATES

SHEET 18 OF 25

FILE => 54e0044sasio18.dgn

USERNAME => s121614 DATE PLOTTED => 18-APR-2012 TIME PLOTTED => 17:31

DIST	COUNTY	ROUTE	POST MILES TOTAL PROJECT	SHEET No.	TOTAL SHEETS
08	Riv,SBd	91,215	21.5/21.7, 43.2/45.2,0.0/5.1	1261	1743

Chris Hoadley 12-28-11
CERTIFIED ENGINEERING GEOLOGIST DATE

4-16-12
PLANS APPROVAL DATE

PROFESSIONAL GEOLOGIST
Chris Hoadley
No. 2309
Exp. 11-23-13
CERTIFIED ENGINEERING GEOLOGIST
STATE OF CALIFORNIA

The State of California or its officers or agents shall not be responsible for the accuracy or completeness of electronic copies of this plan sheet.

This LOTB sheet was prepared in accordance with the Caltrans Soil & Rock Logging, Classification, & Presentation Manual (2010 Edition).

BENCH MARK

BM #3070 Elev 1029.10′
N 1,837,200.230
E 6,767,861.110
FD STD BR DISK STAMPED "SBd 215-1.78 1988"
IN SIDEWALK ON NEWPORT AVE BRIDGE.
NAVD 88

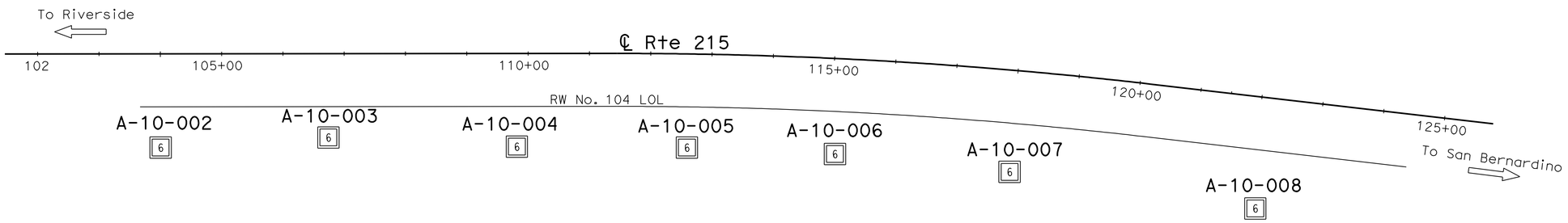

PLAN
1" = 100′

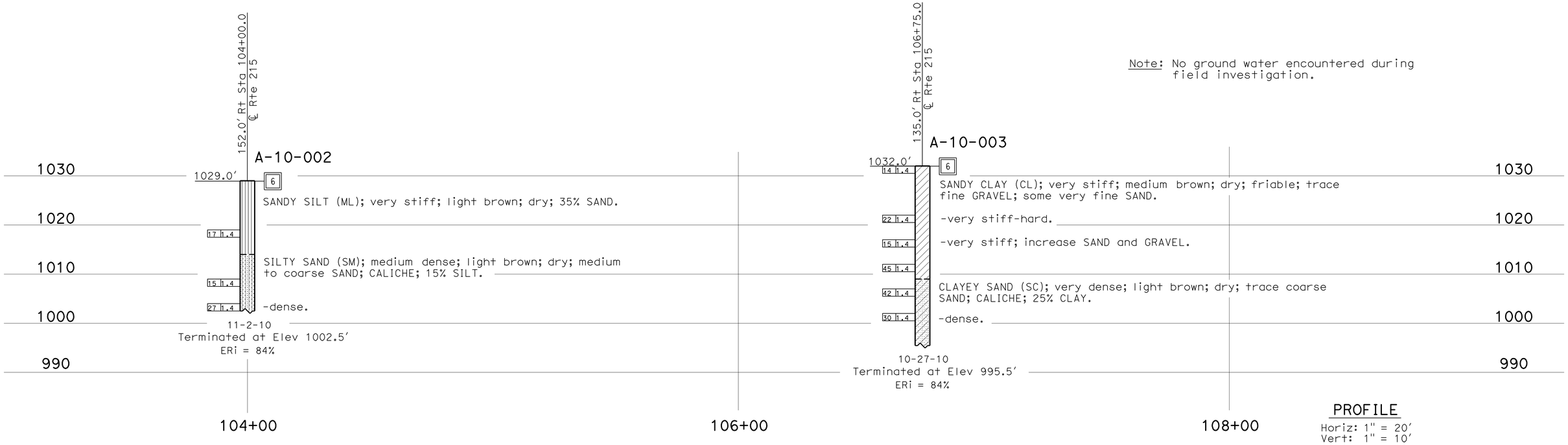

Note: No ground water encountered during field investigation.

PROFILE
Horiz: 1" = 20′
Vert: 1" = 10′

ENGINEERING SERVICES	GEOTECHNICAL SERVICES	STATE OF CALIFORNIA DEPARTMENT OF TRANSPORTATION	DIVISION OF ENGINEERING SERVICES STRUCTURE DESIGN DESIGN BRANCH 10	BRIDGE NO. 54E0044 POST MILE 1.78	RETAINING WALL NO. 103
FUNCTIONAL SUPERVISOR NAME: S. Wei	DRAWN BY: W. Tang 12/11 CHECKED BY: B. Gutierrez	FIELD INVESTIGATION BY: C. Hoadley			LOG OF TEST BORINGS 1 OF 7

OGS CIVIL LOG OF TEST BORINGS SHEET

ORIGINAL SCALE IN INCHES FOR REDUCED PLANS 0 1 2 3

UNIT: 3643
PROJECT NUMBER & PHASE: 08000005061 CONTRACT NO.: 08-0M9401

DISREGARD PRINTS BEARING EARLIER REVISION DATES

REVISION DATES 12-27-11 SHEET 19 OF 25

FILE => 54e0044z1tb19.dgn

USERNAME => s121614 DATE PLOTTED => 18-APR-2012 TIME PLOTTED => 17:51

DIST	COUNTY	ROUTE	POST MILES TOTAL PROJECT	SHEET No.	TOTAL SHEETS
08	Riv,SBd	91,215	21.5/21.7, 43.2/45.2,0.0/5.1	1262	1743

CERTIFIED ENGINEERING GEOLOGIST — DATE 12-28-11

4-16-12
PLANS APPROVAL DATE

PROFESSIONAL GEOLOGIST — Chris Hoadley — No. 2309 — Exp. 11-23-13 — CERTIFIED ENGINEERING GEOLOGIST — STATE OF CALIFORNIA

The State of California or its officers or agents shall not be responsible for the accuracy or completeness of electronic copies of this plan sheet.

This LOTB sheet was prepared in accordance with the Caltrans Soil & Rock Logging, Classification, & Presentation Manual (2010 Edition).

FOR PLAN VIEW, SEE
"LOG OF TEST BORINGS 1 OF 7"

Note: No ground water encountered during field investigation.

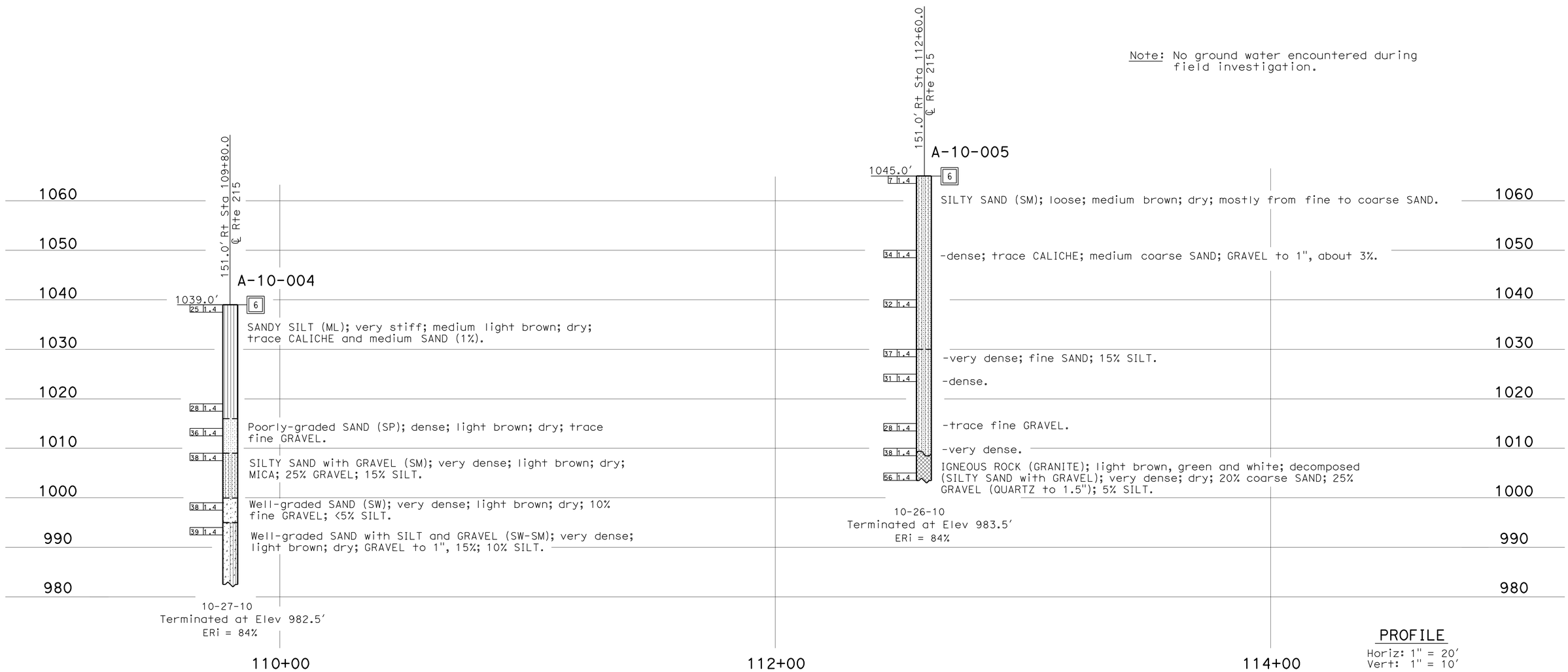

PROFILE
Horiz: 1" = 20'
Vert: 1" = 10'

ENGINEERING SERVICES	GEOTECHNICAL SERVICES	STATE OF CALIFORNIA DEPARTMENT OF TRANSPORTATION	DIVISION OF ENGINEERING SERVICES STRUCTURE DESIGN DESIGN BRANCH 10	BRIDGE NO. 54E0044 POST MILE 1.78	RETAINING WALL NO. 103 LOG OF TEST BORINGS 2 OF 7
FUNCTIONAL SUPERVISOR NAME: S. Wei	DRAWN BY: W. Tang 12/11 CHECKED BY: B. Gutierrez	FIELD INVESTIGATION BY: C. Hoadley			

OGS CIVIL LOG OF TEST BORINGS SHEET

ORIGINAL SCALE IN INCHES FOR REDUCED PLANS 0 1 2 3

UNIT: 3643
PROJECT NUMBER & PHASE: 08000005061 CONTRACT NO.: 08-0M9401

DISREGARD PRINTS BEARING EARLIER REVISION DATES 12-27-11

REVISION DATES | SHEET 20 | OF 25

FILE => 54e0044zltb20.dgn

USERNAME => s126614 DATE PLOTTED => 18-APR-2012 TIME PLOTTED => 17:32

DIST	COUNTY	ROUTE	POST MILES TOTAL PROJECT	SHEET No.	TOTAL SHEETS
08	Riv,SBd	91,215	21.5/21.7, 43.2/45.2,0.0/5.1	1263	1743

Chris Hoadley 12-28-11
CERTIFIED ENGINEERING GEOLOGIST DATE

4-16-12
PLANS APPROVAL DATE

PROFESSIONAL GEOLOGIST Chris Hoadley No. 2309 Exp. 11-23-13 CERTIFIED ENGINEERING GEOLOGIST STATE OF CALIFORNIA

The State of California or its officers or agents shall not be responsible for the accuracy or completeness of electronic copies of this plan sheet.

This LOTB sheet was prepared in accordance with the Caltrans Soil & Rock Logging, Classification, & Presentation Manual (2010 Edition).

FOR PLAN VIEW, SEE
"LOG OF TEST BORINGS 1 OF 7"

Note: No ground water encountered during field investigation.

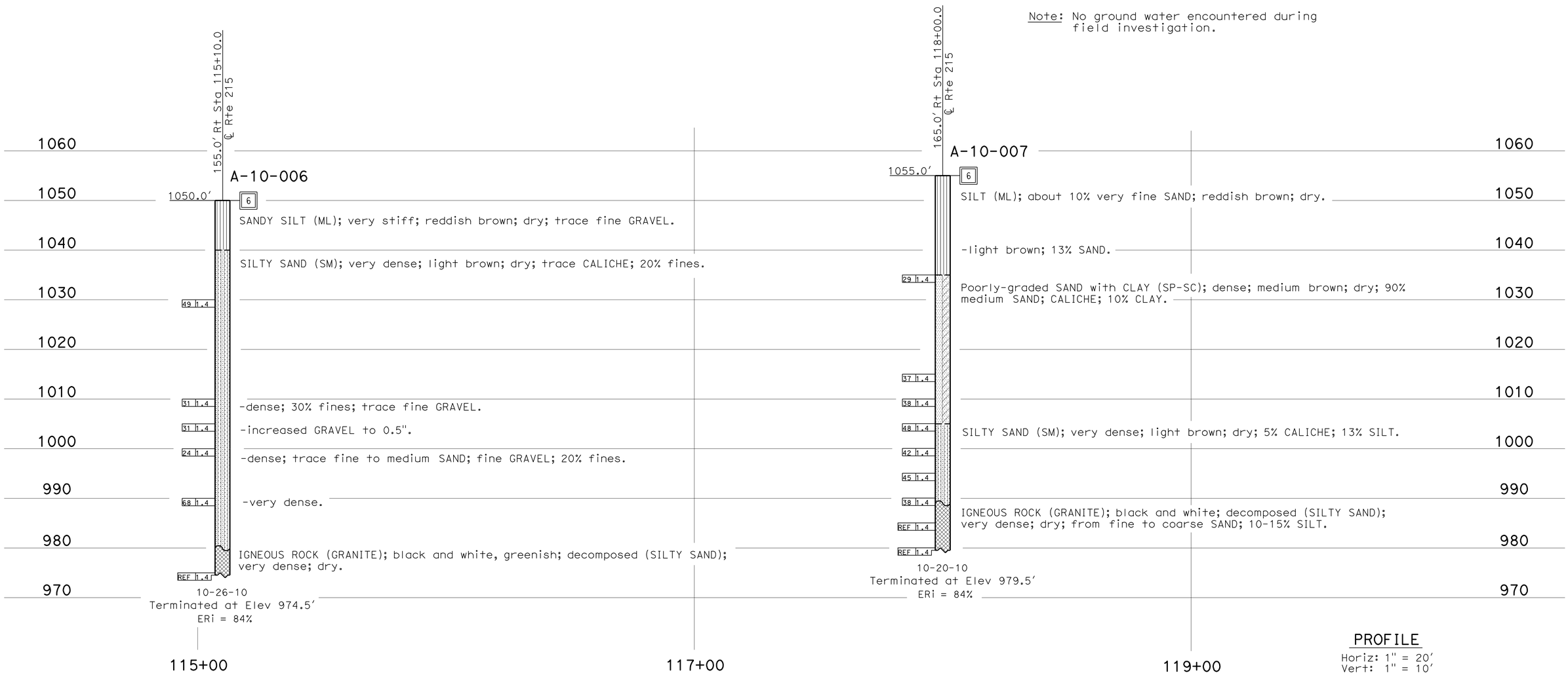

PROFILE
Horiz: 1" = 20'
Vert: 1" = 10'

ENGINEERING SERVICES	GEOTECHNICAL SERVICES	STATE OF CALIFORNIA DEPARTMENT OF TRANSPORTATION	DIVISION OF ENGINEERING SERVICES STRUCTURE DESIGN DESIGN BRANCH 10	BRIDGE NO. 54E0044 POST MILE 1.78	RETAINING WALL NO. 103
FUNCTIONAL SUPERVISOR NAME: S. Wei	DRAWN BY: W. Tang 12/11 CHECKED BY: B. Gutierrez	FIELD INVESTIGATION BY: C. Hoadley			LOG OF TEST BORINGS 3 OF 7

OGS CIVIL LOG OF TEST BORINGS SHEET

ORIGINAL SCALE IN INCHES FOR REDUCED PLANS 0 1 2 3

UNIT: 3643
PROJECT NUMBER & PHASE: 08000005061 CONTRACT NO.: 08-0M9401

DISREGARD PRINTS BEARING EARLIER REVISION DATES → 12-27-11

REVISION DATES | SHEET 21 | OF 25

FILE => 54e0044zltb21.dgn

USERNAME => s612614 DATE PLOTTED => 18-APR-2012 TIME PLOTTED => 17:32

DIST	COUNTY	ROUTE	POST MILES TOTAL PROJECT	SHEET No.	TOTAL SHEETS
08	Riv,SBd	91,215	21.5/21.7, 43.2/45.2,0.0/5.1	1264	1743

CERTIFIED ENGINEERING GEOLOGIST — DATE 12-28-11

4-16-12
PLANS APPROVAL DATE

PROFESSIONAL GEOLOGIST — Chris Hoadley No. 2309 Exp. 11-23-13 CERTIFIED ENGINEERING GEOLOGIST — STATE OF CALIFORNIA

The State of California or its officers or agents shall not be responsible for the accuracy or completeness of electronic copies of this plan sheet.

This LOTB sheet was prepared in accordance with the Caltrans Soil & Rock Logging, Classification, & Presentation Manual (2010 Edition).

FOR PLAN VIEW, SEE
"LOG OF TEST BORINGS 1 OF 7"

Note: No ground water encountered during field investigation.

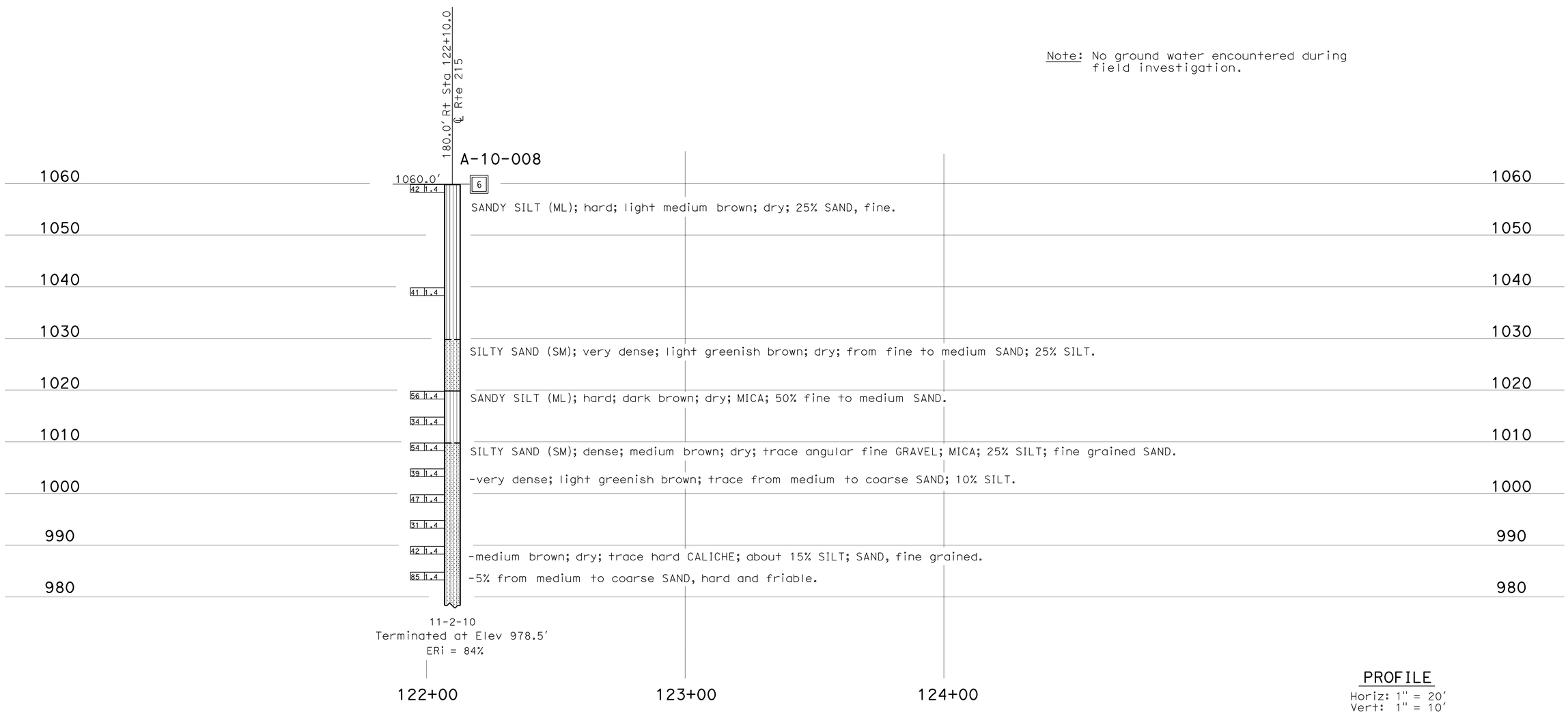

PROFILE
Horiz: 1" = 20'
Vert: 1" = 10'

ENGINEERING SERVICES		GEOTECHNICAL SERVICES	STATE OF CALIFORNIA DEPARTMENT OF TRANSPORTATION	DIVISION OF ENGINEERING SERVICES STRUCTURE DESIGN DESIGN BRANCH 10	BRIDGE NO. 54E0044 POST MILE 1.78	RETAINING WALL NO. 103 LOG OF TEST BORINGS 4 OF 7
FUNCTIONAL SUPERVISOR NAME: S. Wei	DRAWN BY: W. Tang 12/11 CHECKED BY: B. Gutierrez	FIELD INVESTIGATION BY: C. Hoadley				

OGS CIVIL LOG OF TEST BORINGS SHEET — ORIGINAL SCALE IN INCHES FOR REDUCED PLANS 0 1 2 3

UNIT: 3643
PROJECT NUMBER & PHASE: 08000005061 — CONTRACT NO.: 08-0M9401

DISREGARD PRINTS BEARING EARLIER REVISION DATES → REVISION DATES 12-27-11 — SHEET 22 OF 25

FILE => 54e0044zltb22.dgn

USERNAME => s121614 DATE PLOTTED => 18-APR-2012 TIME PLOTTED => 17:32

REFERENCE: CALTRANS SOIL & ROCK LOGGING, CLASSIFICATION, AND PRESENTATION MANUAL (2010)

DIST	COUNTY	ROUTE	POST MILES TOTAL PROJECT	SHEET No.	TOTAL SHEETS
08	Riv,SBd	91,215	21.5/21.7, 43.2/45.2,0.0/5.1	1265	1743

Chris Hoadley 12-28-11
CERTIFIED ENGINEERING GEOLOGIST DATE

4-16-12
PLANS APPROVAL DATE

PROFESSIONAL GEOLOGIST Chris Hoadley No. 2309 Exp. 11-23-13 CERTIFIED ENGINEERING GEOLOGIST STATE OF CALIFORNIA

The State of California or its officers or agents shall not be responsible for the accuracy or completeness of electronic copies of this plan sheet.

This LOTB sheet was prepared in accordance with the Caltrans Soil & Rock Logging, Classification, & Presentation Manual (2010 Edition).

CEMENTATION

Description	Criteria
Weak	Crumbles or breaks with handling or little finger pressure.
Moderate	Crumbles or breaks with considerable finger pressure.
Strong	Will not crumble or break with finger pressure.

BOREHOLE IDENTIFICATION

Symbol	Hole Type	Description
Size	A	Auger Boring (hollow or solid stem bucket)
Size	R RW RC P	Rotary drilled boring (conventional) Rotary drilled with self-casing wire-line Rotary core with continuously-sampled, self-casing wire-line Rotary percussion boring (air)
Size	R RC	Rotary drilled diamond core Rotary drilled rock core
Size	HD HA	Hand driven (1-inch soil tube) Hand Auger
●	D	Dynamic Cone Penetration Boring
▲	CPT	Cone Penetration Test (ASTM D 5778)
⬚	O	Other (note on LOTB)

Note: Size in inches.

CONSISTENCY OF COHESIVE SOILS

Description	Shear Strength (tsf)	Pocket Penetrometer Measurement, PP, (tsf)	Torvane Measurement, TV, (tsf)	Vane Shear Measurement, VS, (tsf)
Very Soft	Less than 0.12	Less than 0.25	Less than 0.12	Less than 0.12
Soft	0.12 - 0.25	0.25 - 0.5	0.12 - 0.25	0.12 - 0.25
Medium Stiff	0.25 - 0.5	0.5 - 1	0.25 - 0.5	0.25 - 0.5
Stiff	0.5 - 1	1 - 2	0.5 - 1	0.5 - 1
Very Stiff	1 - 2	2 - 4	1 - 2	1 - 2
Hard	Greater than 2	Greater than 4	Greater than 2	Greater than 2

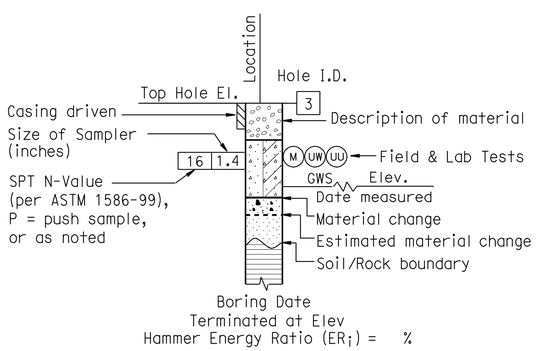

ROTARY BORING

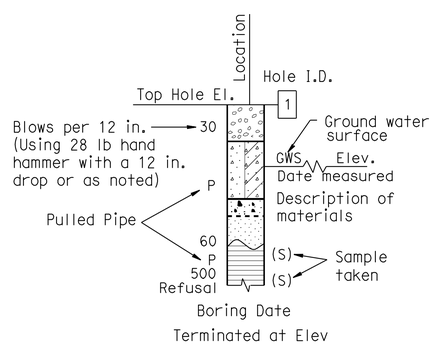

HAND BORING

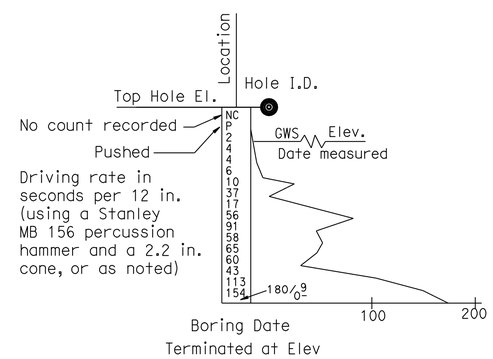

DYNAMIC CONE PENETRATION BORING

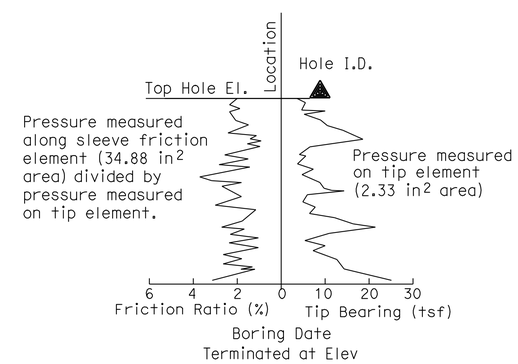

CONE PENETRATION TEST (CPT) BORING

ENGINEERING SERVICES	MATERIALS AND GEOTECHNICAL SERVICES	STATE OF CALIFORNIA DEPARTMENT OF TRANSPORTATION	DIVISION OF ENGINEERING SERVICES STRUCTURE DESIGN DESIGN BRANCH 10	BRIDGE NO. 54E0044 POST MILE 1.78	RETAINING WALL NO. 103 LOG OF TEST BORINGS 5 OF 7
	PREPARED BY: W. Tang				

GS LOTB SOIL LEGEND

ORIGINAL SCALE IN INCHES FOR REDUCED PLANS 0 1 2 3

UNIT: 3643
PROJECT NUMBER & PHASE: 08000005061 CONTRACT NO.: 08-0M9401

DISREGARD PRINTS BEARING EARLIER REVISION DATES → 12-27-11

REVISION DATES | SHEET 23 | OF 25

FILE => 54e0044zltb23.dgn

USERNAME => s121614 DATE PLOTTED => 18-APR-2012 TIME PLOTTED => 17:32

REFERENCE: CALTRANS SOIL & ROCK LOGGING, CLASSIFICATION, AND PRESENTATION MANUAL (2010)

DIST	COUNTY	ROUTE	POST MILES TOTAL PROJECT	SHEET No.	TOTAL SHEETS
08	Riv,SBd	91,215	21.5/21.7, 43.2/45.2,0.0/5.1	1266	1743

CERTIFIED ENGINEERING GEOLOGIST — DATE 12-28-11

4-16-12
PLANS APPROVAL DATE

PROFESSIONAL GEOLOGIST — Chris Hoadley No. 2309 Exp. 11-23-13 CERTIFIED ENGINEERING GEOLOGIST — STATE OF CALIFORNIA

The State of California or its officers or agents shall not be responsible for the accuracy or completeness of electronic copies of this plan sheet.

GROUP SYMBOLS AND NAMES

Graphic/Symbol	Group Names	Graphic/Symbol	Group Names
GW	Well-graded GRAVEL Well-graded GRAVEL with SAND	CL	Lean CLAY Lean CLAY with SAND Lean CLAY with GRAVEL SANDY lean CLAY SANDY lean CLAY with GRAVEL GRAVELLY lean CLAY GRAVELLY lean CLAY with SAND
GP	Poorly-graded GRAVEL Poorly-graded GRAVEL with SAND		
GW-GM	Well-graded GRAVEL with SILT Well-graded GRAVEL with SILT and SAND	CL-ML	SILTY CLAY SILTY CLAY with SAND SILTY CLAY with GRAVEL SANDY SILTY CLAY SANDY SILTY CLAY with GRAVEL GRAVELLY SILTY CLAY GRAVELLY SILTY CLAY with SAND
GW-GC	Well-graded GRAVEL with CLAY (or SILTY CLAY) Well-graded GRAVEL with CLAY and SAND (or SILTY CLAY and SAND)		
GP-GM	Poorly-graded GRAVEL with SILT Poorly-graded GRAVEL with SILT and SAND	ML	SILT SILT with SAND SILT with GRAVEL SANDY SILT SANDY SILT with GRAVEL GRAVELLY SILT GRAVELLY SILT with SAND
GP-GC	Poorly-graded GRAVEL with CLAY (or SILTY CLAY) Poorly-graded GRAVEL with CLAY and SAND (or SILTY CLAY and SAND)		
GM	SILTY GRAVEL SILTY GRAVEL with SAND	OL	ORGANIC lean CLAY ORGANIC lean CLAY with SAND ORGANIC lean CLAY with GRAVEL SANDY ORGANIC lean CLAY SANDY ORGANIC lean CLAY with GRAVEL GRAVELLY ORGANIC lean CLAY GRAVELLY ORGANIC lean CLAY with SAND
GC	CLAYEY GRAVEL CLAYEY GRAVEL with SAND		
GC-GM	SILTY, CLAYEY GRAVEL SILTY, CLAYEY GRAVEL with SAND	OL	ORGANIC SILT ORGANIC SILT with SAND ORGANIC SILT with GRAVEL SANDY ORGANIC SILT SANDY ORGANIC SILT with GRAVEL GRAVELLY ORGANIC SILT GRAVELLY ORGANIC SILT with SAND
SW	Well-graded SAND Well-graded SAND with GRAVEL		
SP	Poorly-graded SAND Poorly-graded SAND with GRAVEL	CH	Fat CLAY Fat CLAY with SAND Fat CLAY with GRAVEL SANDY fat CLAY SANDY fat CLAY with GRAVEL GRAVELLY fat CLAY GRAVELLY fat CLAY with SAND
SW-SM	Well-graded SAND with SILT Well-graded SAND with SILT and GRAVEL		
SW-SC	Well-graded SAND with CLAY (or SILTY CLAY) Well-graded SAND with CLAY and GRAVEL (or SILTY CLAY and GRAVEL)	MH	Elastic SILT Elastic SILT with SAND Elastic SILT with GRAVEL SANDY elastic SILT SANDY elastic SILT with GRAVEL GRAVELLY elastic SILT GRAVELLY elastic SILT with SAND
SP-SM	Poorly-graded SAND with SILT Poorly-graded SAND with SILT and GRAVEL		
SP-SC	Poorly-graded SAND with CLAY (or SILTY CLAY) Poorly-graded SAND with CLAY and GRAVEL (or SILTY CLAY and GRAVEL)	OH	ORGANIC fat CLAY ORGANIC fat CLAY with SAND ORGANIC fat CLAY with GRAVEL SANDY ORGANIC fat CLAY SANDY ORGANIC fat CLAY with GRAVEL GRAVELLY ORGANIC fat CLAY GRAVELLY ORGANIC fat CLAY with SAND
SM	SILTY SAND SILTY SAND with GRAVEL		
SC	CLAYEY SAND CLAYEY SAND with GRAVEL	OH	ORGANIC elastic SILT ORGANIC elastic SILT with SAND ORGANIC elastic SILT with GRAVEL SANDY ORGANIC elastic SILT SANDY ORGANIC elastic SILT with GRAVEL GRAVELLY ORGANIC elastic SILT GRAVELLY ORGANIC elastic SILT with SAND
SC-SM	SILTY, CLAYEY SAND SILTY, CLAYEY SAND with GRAVEL		
PT	PEAT	OL/OH	ORGANIC SOIL ORGANIC SOIL with SAND ORGANIC SOIL with GRAVEL SANDY ORGANIC SOIL SANDY ORGANIC SOIL with GRAVEL GRAVELLY ORGANIC SOIL GRAVELLY ORGANIC SOIL with SAND
	COBBLES COBBLES and BOULDERS BOULDERS		

FIELD AND LABORATORY TESTING

- (C) Consolidation (ASTM D 2435)
- (CL) Collapse Potential (ASTM D 5333)
- (CP) Compaction Curve (CTM 216)
- (CR) Corrosivity Testing (CTM 643, CTM 422, CTM 417)
- (CU) Consolidated Undrained Triaxial (ASTM D 4767)
- (DS) Direct Shear (ASTM D 3080)
- (EI) Expansion Index (ASTM D 4829)
- (M) Moisture Content (ASTM D 2216)
- (OC) Organic Content-% (ASTM D 2974)
- (P) Permeability (CTM 220)
- (PA) Particle Size Analysis (ASTM D 422)
- (PI) Plasticity Index (AASHTO T 90) Liquid Limit (AASHTO T 89)
- (PL) Point Load Index (ASTM D 5731)
- (PM) Pressure Meter
- (R) R-Value (CTM 301)
- (SE) Sand Equivalent (CTM 217)
- (SG) Specific Gravity (AASHTO T 100)
- (SL) Shrinkage Limit (ASTM D 427)
- (SW) Swell Potential (ASTM D 4546)
- (UC) Unconfined Compression-Soil (ASTM D 2166) Unconfined Compression-Rock (ASTM D 2938)
- (UU) Unconsolidated Undrained Triaxial (ASTM D 2850)
- (UW) Unit Weight (ASTM D 4767)

APPARENT DENSITY OF COHESIONLESS SOILS

Description	SPT N_{60} (Blows / 12 in.)
Very Loose	0 - 5
Loose	5 - 10
Medium Dense	10 - 30
Dense	30 - 50
Very Dense	Greater than 50

MOISTURE

Description	Criteria
Dry	No discernable moisture
Moist	Moisture present, but no free water
Wet	Visible free water

PERCENT OR PROPORTION OF SOILS

Description	Criteria
Trace	Particles are present but estimated to be less than 5%
Few	5% - 10%
Little	15% - 25%
Some	30% - 45%
Mostly	50% - 100%

PARTICLE SIZE

Description		Size (in.)
Boulder		Greater than 12
Cobble		3 - 12
Gravel	Coarse	3/4 - 3
	Fine	1/5 - 3/4
Sand	Coarse	1/16 - 1/5
	Medium	1/64 - 1/16
	Fine	1/300 - 1/64
Silt and Clay		Less than 1/300

ENGINEERING SERVICES

MATERIALS AND GEOTECHNICAL SERVICES
PREPARED BY: W. Tang

STATE OF CALIFORNIA
DEPARTMENT OF TRANSPORTATION

DIVISION OF ENGINEERING SERVICES
STRUCTURE DESIGN
DESIGN BRANCH 10

BRIDGE NO. 54E0044
POST MILE 1.78

RETAINING WALL NO. 103
LOG OF TEST BORINGS 6 OF 7

GS LOTB SOIL LEGEND

ORIGINAL SCALE IN INCHES FOR REDUCED PLANS 0 1 2 3

UNIT: 3643
PROJECT NUMBER & PHASE: 08000005061
CONTRACT NO.: 08-0M9401

DISREGARD PRINTS BEARING EARLIER REVISION DATES

REVISION DATES 12-27-11 | SHEET 24 | OF 25

FILE => 54e0044zltb24.dgn

USERNAME => s121614 DATE PLOTTED => 18-APR-2012 TIME PLOTTED => 17:32

REFERENCE: CALTRANS SOIL & ROCK LOGGING, CLASSIFICATION, AND PRESENTATION MANUAL (2010)

DIST	COUNTY	ROUTE	POST MILES TOTAL PROJECT	SHEET No.	TOTAL SHEETS
08	Riv,SBd	91,215	21.5/21.7, 43.2/45.2,0.0/5.1	1267	1743

CERTIFIED ENGINEERING GEOLOGIST 12-28-11 DATE

4-16-12
PLANS APPROVAL DATE

PROFESSIONAL GEOLOGIST Chris Hoadley No. 2309 Exp. 11-23-13 CERTIFIED ENGINEERING GEOLOGIST STATE OF CALIFORNIA

The State of California or its officers or agents shall not be responsible for the accuracy or completeness of electronic copies of this plan sheet.

This LOTB sheet was prepared in accordance with the Caltrans Soil & Rock Logging, Classification, & Presentation Manual (2010 Edition).

PERCENT CORE RECOVERY (REC) & ROCK QUALITY DESIGNATION (RQD)

$$REC = \frac{\sum \text{Length of the recovered core pieces (in.)}}{\text{Total length of core run (in.)}} \times 100\%$$

$$RQD = \frac{\sum \text{Length of intact core pieces} \geq 4 \text{ in.}}{\text{Total length of core run (in.)}} \times 100\%$$

RQD* Indicates soundness criteria not met.

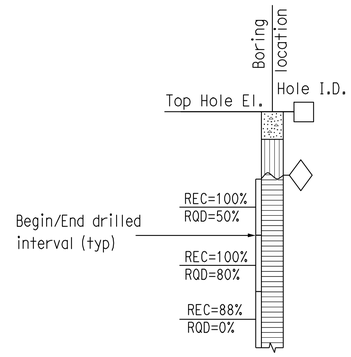

BEDDING SPACING

Description	Thickness / Spacing
Massive	Greater than 10 ft
Very Thickly Bedded	3 ft - 10 ft
Thickly Bedded	1 ft - 3 ft
Moderately Bedded	4 in. - 1 ft
Thinly Bedded	1 in. - 4 in.
Very Thinly Bedded	1/4 in. - 1 in.
Laminated	Less than 1/4 in.

LEGEND OF ROCK MATERIALS

- IGNEOUS ROCK
- SEDIMENTARY ROCK
- METAMORPHIC ROCK

ROCK HARDNESS

Description	Criteria
Extremely Hard	Cannot be scratched with a pocketknife or sharp pick. Can only be chipped with repeated heavy hammer blows.
Very Hard	Cannot be scratched with a pocketknife or sharp pick. Breaks with repeated heavy hammer blows.
Hard	Can be scratched with a pocketknife or sharp pick with difficulty (heavy pressure). Breaks with heavy hammer blows.
Moderately Hard	Can be scratched with pocketknife or sharp pick with light or moderate pressure. Breaks with moderate hammer blows.
Moderately Soft	Can be grooved 1/16 in. deep with a pocketknife or sharp pick with moderate or heavy pressure. Breaks with light hammer blow or heavy manual pressure.
Soft	Can be grooved or gouged easily by a pocketknife or sharp pick with light pressure, can be scratched with fingernail. Breaks with light to moderate manual pressure.
Very Soft	Can be readily indented, grooved or gouged with fingernail, or carved with a pocketknife. Breaks with light manual pressure.

FRACTURE DENSITY

Description	Observed Fracture Density
Unfractured	No fractures.
Very Slightly Fractured	Core lengths greater than 3 ft.
Slightly Fractured	Core lengths mostly from 1 to 3 ft.
Moderately Fractured	Core lengths mostly from 4 in. to 1 ft.
Intensely Fractured	Core lengths mostly from 1 to 4 in.
Very Intensely Fractured	Mostly chips and fragments.

WEATHERING DESCRIPTORS FOR INTACT ROCK

Description	Diagnostic Features					General Characteristics
	Chemical Weathering-Discoloration and/or Oxidation		Mechanical Weathering-Grain Boundary Conditions (Disaggregation) Primarily for Granitics and Some Coarse-Grained Sediments	Texture and Leaching		
	Body of Rock	Fracture Surfaces		Texture	Leaching	
Fresh	No discoloration, not oxidized.	No discoloration or oxidation.	No separation, intact (tight).	No change	No leaching	Hammer rings when crystalline rocks are struck.
Slightly Weathered	Discoloration or oxidation is limited to surface of, or short distance from, fractures; some feldspar crystals are dull.	Minor to complete discoloration or oxidation of most surfaces.	No visible separation, intact (tight).	Preserved	Minor leaching of some soluble minerals.	Hammer rings when crystalline rocks are struck. Body of rock not weakened.
Moderately Weathered	Discoloration or oxidation extends from fractures usually throughout; Fe-Mg minerals are "rusty," feldspar crystals are "cloudy."	All fracture surfaces are discolored or oxidized.	Partial separation of boundaries visible.	Generally preserved	Soluble minerals may be mostly leached.	Hammer does not ring when rock is struck. Body of rock is slightly weakened.
Intensely Weathered	Discoloration or oxidation throughout; all feldspars and Fe-Mg minerals are altered to clay to some extent; or chemical alteration produces in-situ disaggregation, see grain boundary conditions.	All fracture surfaces are discolored or oxidized, surfaces friable.	Partial separation, rock is friable; in semiarid conditions granitics are disaggregated.	Texture altered by chemical disintegration (hydration, argillation).	Leaching of soluble minerals may be complete.	Dull sound when struck with hammer, usually can be broken with moderate to heavy manual pressure or by light hammer blow without reference to planes of weakness such as incipient or hairline fractures, or veinlets. Rock is significantly weakened.
Decomposed	Discolored or oxidized throughout, but resistant minerals such as quartz may be unaltered; all feldspars and Fe-Mg minerals are completely altered to clay.		Complete separation of grain boundaries (disaggregated).	Resembles a soil, partial or complete remnant rock structure may be preserved; leaching of soluble minerals usually complete.		Can be granulated by hand. Resistant minerals such as quartz may be present as "stringers" or "dikes."

ENGINEERING SERVICES

MATERIALS AND GEOTECHNICAL SERVICES

PREPARED BY: W. Tang

STATE OF CALIFORNIA DEPARTMENT OF TRANSPORTATION

DIVISION OF ENGINEERING SERVICES STRUCTURE DESIGN DESIGN BRANCH 10

BRIDGE NO. 54E0044

POST MILE 1.78

RETAINING WALL NO. 103

LOG OF TEST BORINGS 7 OF 7

GS LOTB SOIL LEGEND

ORIGINAL SCALE IN INCHES FOR REDUCED PLANS 0 1 2 3

UNIT: 3643
PROJECT NUMBER & PHASE: 08000005061 CONTRACT NO.: 08-0M9401

DISREGARD PRINTS BEARING EARLIER REVISION DATES

REVISION DATES 12-27-11

SHEET 25 OF 25

FILE => 54e0044zltb25.dgn

USERNAME => s12616 DATE PLOTTED => 18-APR-2012 TIME PLOTTED => 17:33

DIST	COUNTY	ROUTE	POST MILES TOTAL PROJECT	SHEET No.	TOTAL SHEETS
08	Riv,SBd	91,215	21.5/21.7, 43.2/45.2,0.0/5.1	1268	1743

REGISTERED CIVIL ENGINEER 4-06-12 DATE

4-16-12
PLANS APPROVAL DATE

REGISTERED PROFESSIONAL ENGINEER LARRY WU No. C57035 Exp. 6-30-13 CIVIL STATE OF CALIFORNIA

The State of California or its officers or agents shall not be responsible for the accuracy or completeness of electronic copies of this plan sheet.

QUANTITIES

STRUCTURE EXCAVATION (RETAINING WALL)	134	CY
STRUCTURE EXCAVATION (SOIL NAIL WALL)	2,540	CY
STRUCTURE BACKFILL (RETAINING WALL)	83	CY
STRUCTURE BACKFILL (SOIL NAIL WALL)	217	CY
PERVIOUS BACKFILL MATERIAL	6	CY
SOIL NAIL	47,367	LF
STRUCTURAL CONCRETE, RETAINING WALL	1,045	CY
ARCHITECTURAL SURFACE (TEXTURED CONCRETE BICOUNTY MURAL	31,064	SQFT
BAR REINFORCING STEEL (RETAINING WALL)	170,700	LB
SHOTCRETE	483	CY
PREPARE AND STAIN CONCRETE	31,064	SQFT
MINOR CONCRETE (GUTTER)	2,070	LF
CABLE RAILING	2,070	LF
CONCRETE BARRIER (TYPE 60D MOD)	2,070	LF

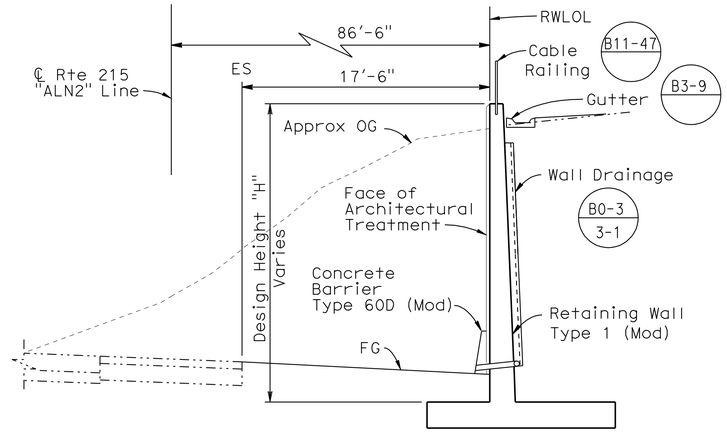

TYPICAL SECTION

3/16" = 1'-0"

Sta 103+67.18 to Sta 103+75.00

INDEX TO PLANS

Sheet No.	Title
1	GENERAL PLAN NO.1
2	GENERAL PLAN NO.2
3	STRUCTURE PLAN NO. 1
4	STRUCTURE PLAN NO. 2
5	STRUCTURE PLAN NO. 3
6	STRUCTURE PLAN NO. 4
7	STRUCTURE PLAN NO. 5
8	STRUCTURE PLAN NO. 6
9	STRUCTURE PLAN NO. 7
10	STRUCTURE PLAN NO. 8
11	STRUCTURE PLAN NO. 9
12	STRUCTURE PLAN NO. 10
13	STRUCTURE PLAN NO. 11
14	RETAINING WALL TYPE 1 (MOD) DETAILS
15	SOIL NAIL WALL DETAILS NO. 1
16	SOIL NAIL WALL DETAILS NO. 2
17	SOIL NAIL WALL DETAILS NO. 3
18	ARCHITECTURAL SURFACE LAYOUT NO. 1
19	ARCHITECTURAL SURFACE LAYOUT NO. 2
20	ARCHITECTURAL SURFACE LAYOUT NO. 3
21	LOG OF TEST BORINGS 1 OF 7
22	LOG OF TEST BORINGS 2 OF 7
23	LOG OF TEST BORINGS 3 OF 7
24	LOG OF TEST BORINGS 4 OF 7
25	LOG OF TEST BORINGS 5 OF 7
26	LOG OF TEST BORINGS 6 OF 7
27	LOG OF TEST BORINGS 7 OF 7

NOTE:
THE CONTRACTOR SHALL VERIFY ALL CONTROLLING FIELD DIMENSIONS BEFORE ORDERING OR FABRICATING ANY MATERIAL.

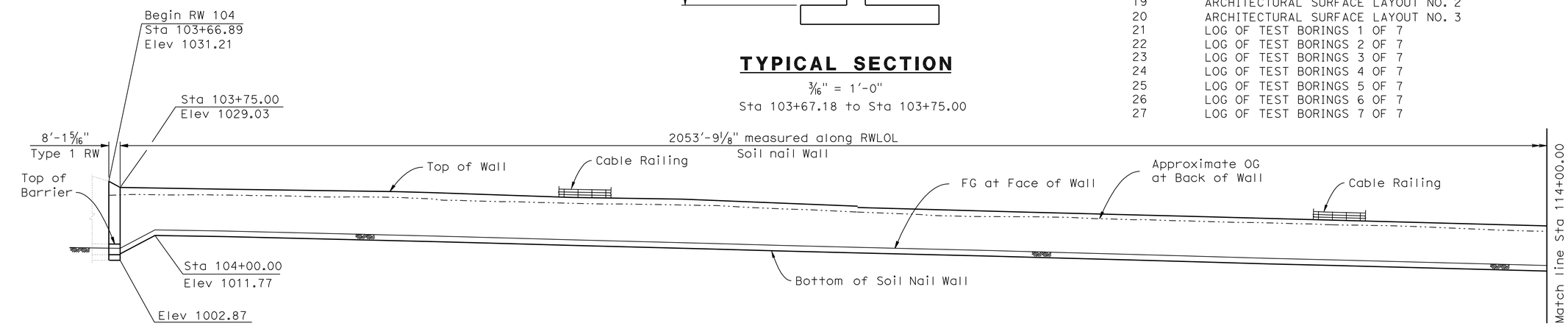

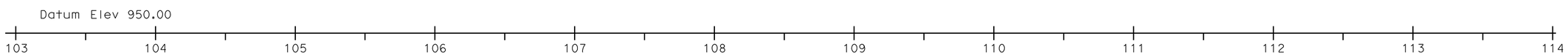

DEVELOPED MIRROR ELEVATION

Vert. 1" = 20'

Horiz. 1" = 40'

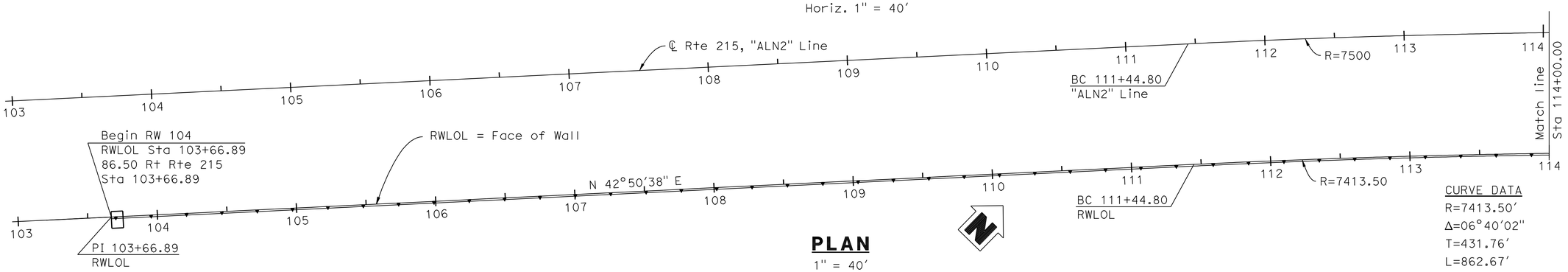

PLAN

1" = 40'

CURVE DATA
R=7413.50'
Δ=06°40'02"
T=431.76'
L=862.67'

For "Design Data", and "Standard Plans", see "GENERAL PLAN NO. 2" Sheet.

DANIEL T. ADAMS DESIGN ENGINEER	DESIGN	BY M. Vo	CHECKED C. Duan	LOAD & RESISTANCE FACTOR DESIGN	LIVE LOADING: HL93 W/"LOW-BOY"; PERMIT DESIGN VEHICLE
	DETAILS	BY D. Wooten/G. Hallstrom	CHECKED C. Duan	LAYOUT BY M. Vo	CHECKED C. Duan
	QUANTITIES	BY A. McPhee	CHECKED F. Chen	SPECIFICATIONS BY J. Corrado	PLANS AND SPECS COMPARED J. Corrado

ORIGINAL SCALE IN INCHES FOR REDUCED PLANS 0 1 2 3

STATE OF CALIFORNIA
DEPARTMENT OF TRANSPORTATION

DIVISION OF ENGINEERING SERVICES
STRUCTURE DESIGN
DESIGN BRANCH 10

UNIT: 3589
PROJECT NUMBER & PHASE: 08000005061
CONTRACT NO.: 08-0M9401

BRIDGE NO. 54E0045
POST MILE 1.79

RETAINING WALL NO. 104
GENERAL PLAN NO. 1

DISREGARD PRINTS BEARING EARLIER REVISION DATES

REVISION DATES 8-28-11 3-28-12 1-06-12

SHEET 1 OF 27

STRUCTURES DESIGN GENERAL PLAN SHEET (ENGLISH) (REV.09-01-10)

FILE => 54e0045agp01.dgn

USERNAME => s121614 DATE PLOTTED => 18-APR-2012 TIME PLOTTED => 17:33

DIST	COUNTY	ROUTE	POST MILES TOTAL PROJECT	SHEET No.	TOTAL SHEETS
08	Riv,SBd	91,215	21.5/21.7, 43.2/45.2,0.0/5.1	1269	1743

REGISTERED CIVIL ENGINEER 4-06-12 DATE

4-16-12
PLANS APPROVAL DATE

REGISTERED PROFESSIONAL ENGINEER LARRY WU No. C57035 Exp. 6-30-13 CIVIL STATE OF CALIFORNIA

The State of California or its officers or agents shall not be responsible for the accuracy or completeness of electronic copies of this plan sheet.

STANDARD PLANS DATED MAY 2006

A10A	ACRONYMS AND ABBREVIATIONS (SHEET 1 OF 2)
A10B	ACRONYMS AND ABBREVIATIONS (SHEET 2 OF 2)
A10C	SYMBOLS (SHEET 1 OF 2)
A10D	SYMBOLS (SHEET 2 OF 2)
B0-1	BRIDGE DETAILS
B0-3	BRIDGE DETAILS
B3-1	RETAINING WALL TYPE 1 H=4′ THROUGH 30′
B3-8	RETAINING WALL DETAILS NO. 1
B3-9	RETAINING WALL DETAILS NO. 2
B11-47	CABLE RAILING

STANDARD PLAN SHEET NO.

DETAIL NO.

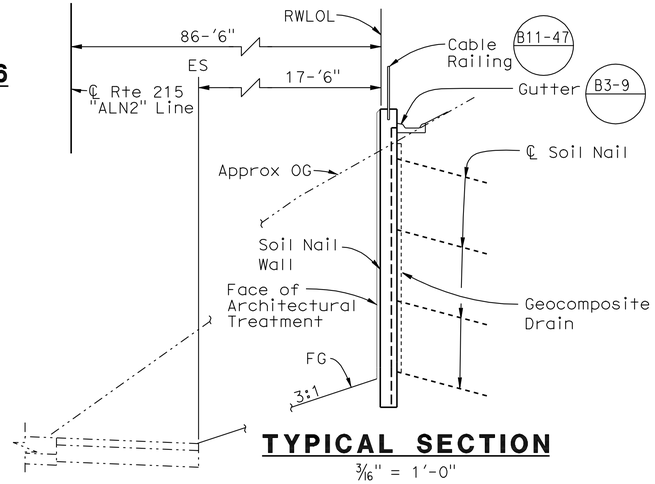

TYPICAL SECTION

3/16" = 1′-0"
Sta 103+75.00 to Sta 124+28.76

DESIGN DATA

DESIGN (SOIL NAIL WALL):	Service Load Design Method per FHWA Geotechnical Engineering Circular No. 7 (FHWA O-IF-03-017) & Manual for Design and Construction Monitoring of Soil Nail Wall (FHWA-SA-96-069R)
LOADING CASE:	Slope with slope ratio of 2:1 Wind Load = 30 psf
SESIMIC LOAD SOIL:	k_h = 0.2g k_v = 0.0g k_{ae} = Mononobe-Okabe Method
REINFORCED CONCRETE:	f_c = 3.6 KSI f_y = 60 KSI
SHOTCRETE:	f_c = 3.6 KSI f_y = 60 KSI
STRUCTURAL STEEL:	ASTM Designation: A709, Grade 36 f_y = 36 KSI
SOIL NAILS:	ASTM Designation: A615, Grade 60 f_y = 60 KSI
SOIL PARAMETERS:	ϕ = 32° c = 0.0 lb/ft^2 γ = 125 lb/ft^3 Q_d = 3.30 k/ft (Design Pullout Resistance)
NOTE:	For Design Data of Retaining Wall Type 1 (Mod), see "RETAINING WALL TYPE 1 (MOD) DETAILS" sheet.

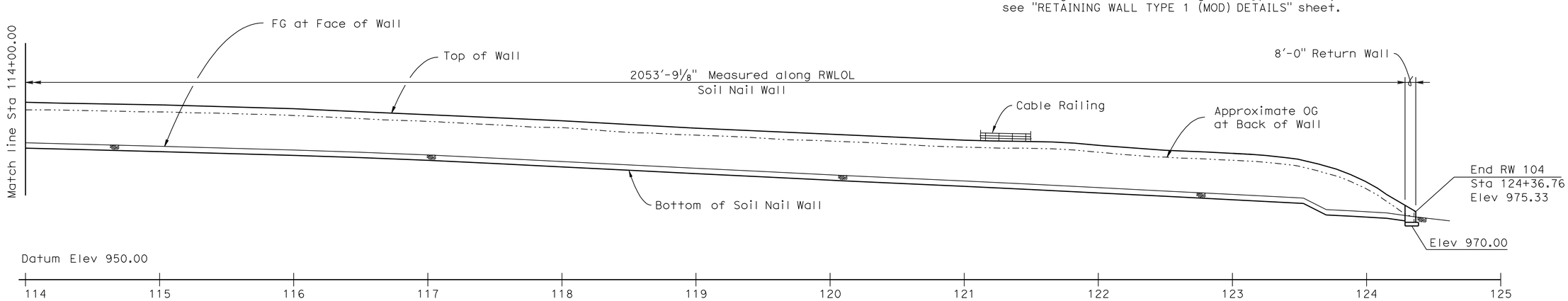

DEVELOPED MIRROR ELEVATION

Vert. 1" = 20′
Horiz. 1" = 40′

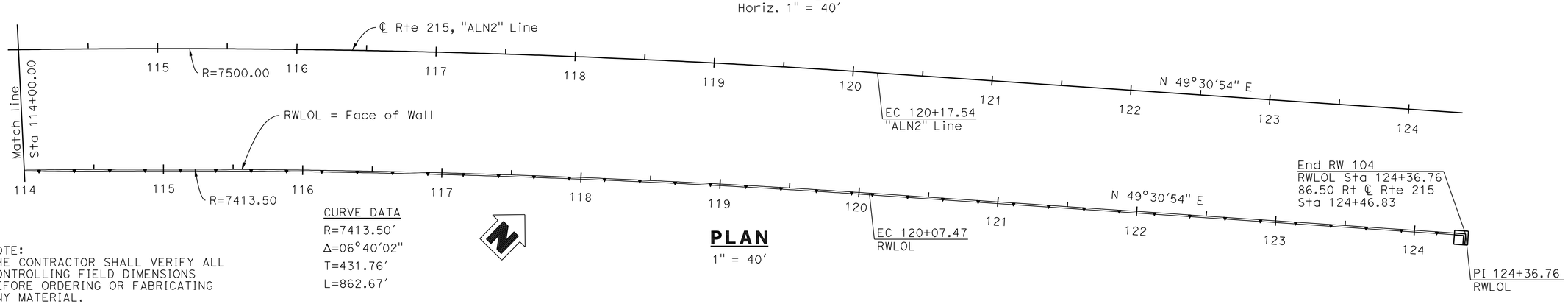

CURVE DATA
R=7413.50′
Δ=06°40′02"
T=431.76′
L=862.67′

PLAN

1" = 40′

NOTE:
THE CONTRACTOR SHALL VERIFY ALL CONTROLLING FIELD DIMENSIONS BEFORE ORDERING OR FABRICATING ANY MATERIAL.

	BY	CHECKED
DESIGN	M. Vo	C. Duan
DETAILS	G. Hallstrom	C. Duan
QUANTITIES	A. McPhee	F. Chen

STATE OF CALIFORNIA
DEPARTMENT OF TRANSPORTATION

DIVISION OF ENGINEERING SERVICES
STRUCTURE DESIGN
DESIGN BRANCH 10

BRIDGE NO. 54E0045
POST MILE 1.79

RETAINING WALL NO. 104
GENERAL PLAN NO. 2

STRUCTURES DESIGN DETAIL SHEET (ENGLISH) (REV. 09-01-10)

ORIGINAL SCALE IN INCHES FOR REDUCED PLANS 0 1 2 3

UNIT: 3589
PROJECT NUMBER & PHASE: 08000005061
CONTRACT NO.: 08-0M9401

DISREGARD PRINTS BEARING EARLIER REVISION DATES

REVISION DATES 8-29-11 3-12-12 1-06-12

SHEET 2 OF 27

FILE => 54e0045agp02.dgn

USERNAME => s124496 DATE PLOTTED => 14-JUN-2012 TIME PLOTTED => 06:17

DIST	COUNTY	ROUTE	POST MILES TOTAL PROJECT	SHEET No.	TOTAL SHEETS
08	Riv,SBd	91,215	21.5/21.7, 43.2/45.2,0.0/5.1	1270	1743

REGISTERED CIVIL ENGINEER 4-06-12 DATE

4-16-12
PLANS APPROVAL DATE

REGISTERED PROFESSIONAL ENGINEER LARRY WU No. C57035 Exp. 6-30-13 CIVIL STATE OF CALIFORNIA

The State of California or its officers or agents shall not be responsible for the accuracy or completeness of electronic copies of this plan sheet.

NOTES:

1. Test nail locations are at midway between production nails. The exact location of the proof test nails to be determined in the field by the Engineer.
2. Contractor shall adjust the concrete gutter to meet the gutter flow line.
3. Cable Railing is not shown for clarity.
4. For "Section C-C", see "RETAINING WALL TYPE 1 (MOD) DETAILS" sheet.

LEGEND:

○ Indicates location of Production Nail assembly.

⊠ Indicates location of Test Nail assembly, see Note 1.

—·—LE# Indicates Soil Nail Profile Line.

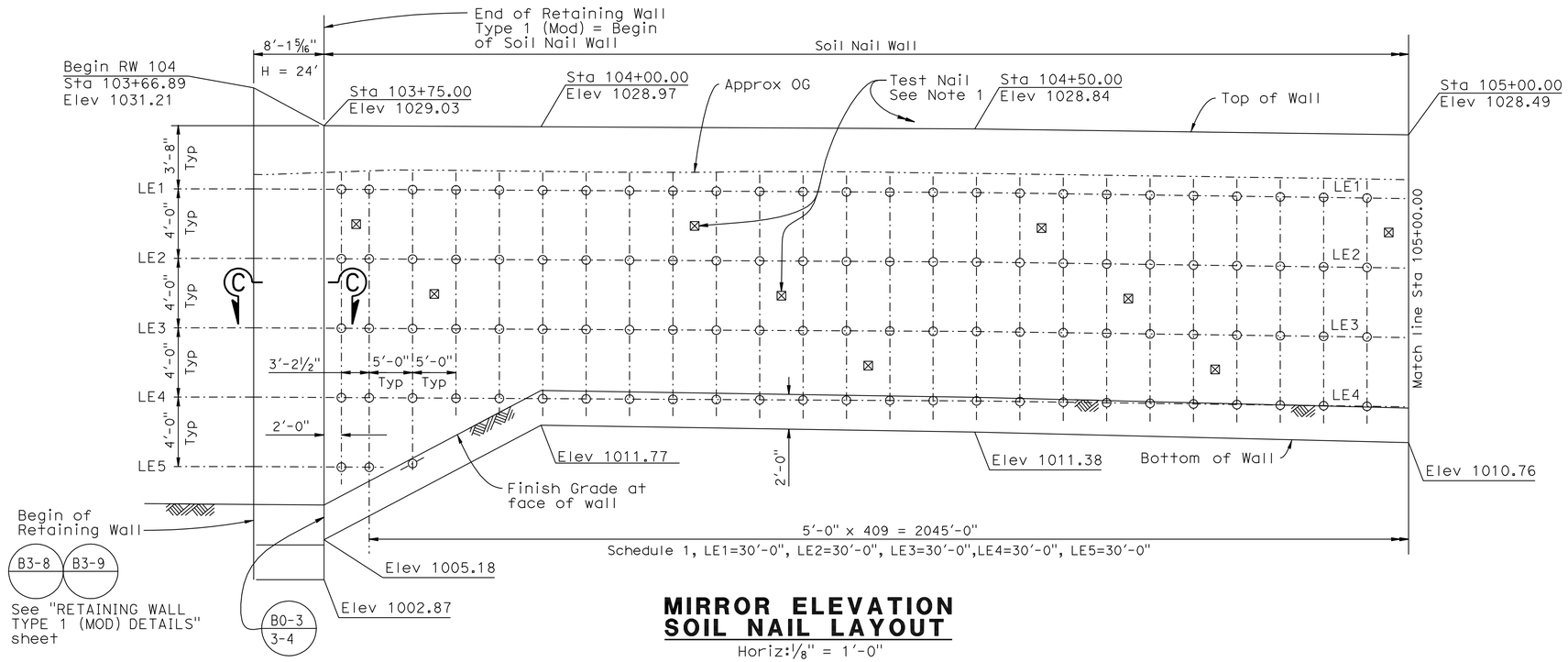

MIRROR ELEVATION SOIL NAIL LAYOUT

Horiz: 1/8" = 1'-0"
Vert: 1/4" = 1'-0"

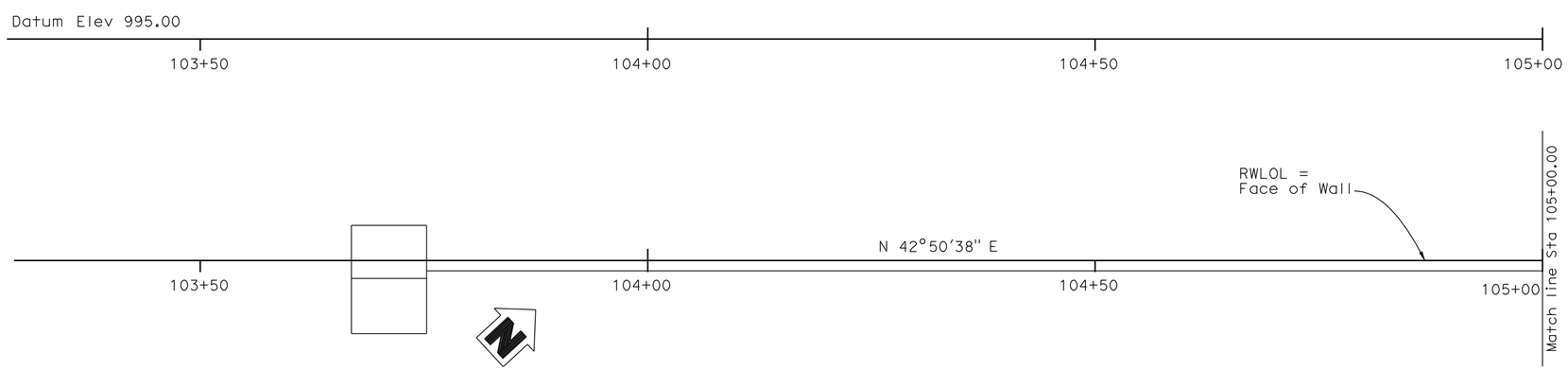

FOOTING PLAN

1/8" = 1'-0"

NOTE:
THE CONTRACTOR SHALL VERIFY ALL CONTROLLING FIELD DIMENSIONS BEFORE ORDERING OR FABRICATING ANY MATERIAL.

DESIGN	BY M. Vo	CHECKED C. Duan	
DETAILS	BY G. Hallstrom	CHECKED C. Duan	
QUANTITIES	BY A. McPhee	CHECKED F. Chen	

STATE OF CALIFORNIA
DEPARTMENT OF TRANSPORTATION

DIVISION OF ENGINEERING SERVICES
STRUCTURE DESIGN
DESIGN BRANCH 10

BRIDGE NO. 54E0045
POST MILE 1.79

RETAINING WALL NO. 104
STRUCTURE PLAN NO. 1

STRUCTURES DESIGN DETAIL SHEET (ENGLISH) (REV. 09-01-10)

ORIGINAL SCALE IN INCHES FOR REDUCED PLANS 0 1 2 3

UNIT: 3589
PROJECT NUMBER & PHASE: 08000005061
CONTRACT NO.: 08-0M9401

DISREGARD PRINTS BEARING EARLIER REVISION DATES

REVISION DATES 8-22-11 3-12-12 1-06-12

SHEET 3 OF 27

FILE => 54e0045csp03.dgn

USERNAME => s124496 DATE PLOTTED => 14-JUN-2012 TIME PLOTTED => 06:17

DIST	COUNTY	ROUTE	POST MILES TOTAL PROJECT	SHEET No.	TOTAL SHEETS
08	Riv,SBd	91,215	21.5/21.7, 43.2/45.2,0.0/5.1	1271	1743

REGISTERED CIVIL ENGINEER — DATE 4-06-12

4-16-12
PLANS APPROVAL DATE

REGISTERED PROFESSIONAL ENGINEER — LARRY WU No. C57035 Exp. 6-30-13 CIVIL — STATE OF CALIFORNIA

The State of California or its officers or agents shall not be responsible for the accuracy or completeness of electronic copies of this plan sheet.

NOTES:

1. Test nail locations are at midway between production nails. The exact location of the proof test nails to be determined in the field by the Engineer.
2. Contractor shall adjust the concrete gutter to meet the gutter flow line.
3. Cable Railing is not shown for clarity.

LEGEND:

○ Indicates location of Production Nail assembly.

⊠ Indicates location of Test Nail assembly, see Note 1.

—·—LE# Indicates Soil Nail Profile Line.

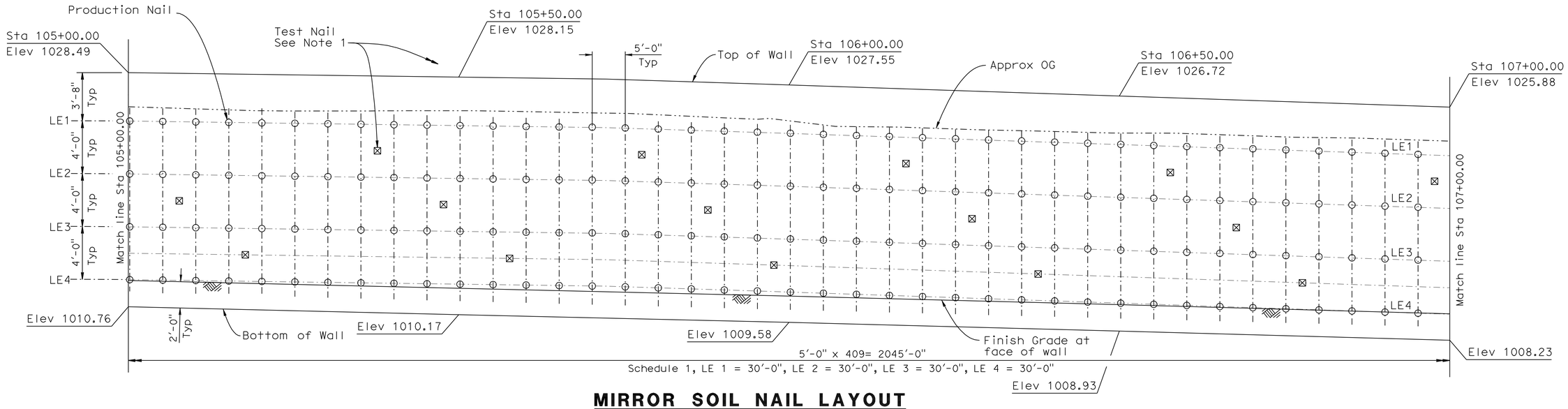

MIRROR SOIL NAIL LAYOUT

Horiz: 1/8" = 1'-0"
Vert: 1/4" = 1'-0"

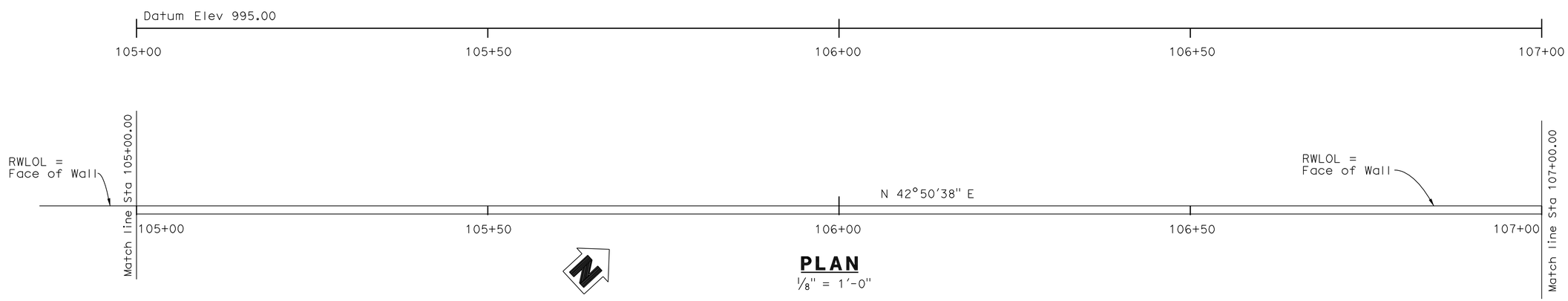

PLAN

1/8" = 1'-0"

NOTE:
THE CONTRACTOR SHALL VERIFY ALL CONTROLLING FIELD DIMENSIONS BEFORE ORDERING OR FABRICATING ANY MATERIAL.

DESIGN	BY M. Vo	CHECKED C. Duan	
DETAILS	BY G. Hallstrom	CHECKED C. Duan	
QUANTITIES	BY A. McPhee	CHECKED F. Chen	

STATE OF CALIFORNIA
DEPARTMENT OF TRANSPORTATION

DIVISION OF ENGINEERING SERVICES
STRUCTURE DESIGN
DESIGN BRANCH 10

BRIDGE NO. 54E0045
POST MILE 1.79

RETAINING WALL NO. 104
STRUCTURE PLAN NO. 2

STRUCTURES DESIGN DETAIL SHEET (ENGLISH) (REV. 09-01-10)

ORIGINAL SCALE IN INCHES FOR REDUCED PLANS 0 1 2 3

UNIT: 3589
PROJECT NUMBER & PHASE: 08000005061
CONTRACT NO.: 08-0M9401

DISREGARD PRINTS BEARING EARLIER REVISION DATES

REVISION DATES: 8-29-11 11-01-11 12-14-11 1-06-12

SHEET 4 OF 27

FILE => 54e0045csp04.dgn

USERNAME => s124496 DATE PLOTTED => 14-JUN-2012 TIME PLOTTED => 06:17

DIST	COUNTY	ROUTE	POST MILES TOTAL PROJECT	SHEET No.	TOTAL SHEETS
08	Riv,SBd	91,215	21.5/21.7, 43.2/45.2,0.0/5.1	1272	1743

REGISTERED CIVIL ENGINEER 4-06-12 DATE

4-16-12
PLANS APPROVAL DATE

REGISTERED PROFESSIONAL ENGINEER LARRY WU No. C57035 Exp. 6-30-13 CIVIL STATE OF CALIFORNIA

The State of California or its officers or agents shall not be responsible for the accuracy or completeness of electronic copies of this plan sheet.

NOTES:

1. Test nail locations are at midway between production nails. The exact location of the proof test nails to be determined in the field by the Engineer.
2. Contractor shall adjust the concrete gutter to meet the gutter flow line.
3. Cable Railing is not shown for clarity.

LEGEND:

○ Indicates location of Production Nail assembly.

⊠ Indicates location of Test Nail assembly, see Note 1.

—·—LE# Indicates Soil Nail Profile Line.

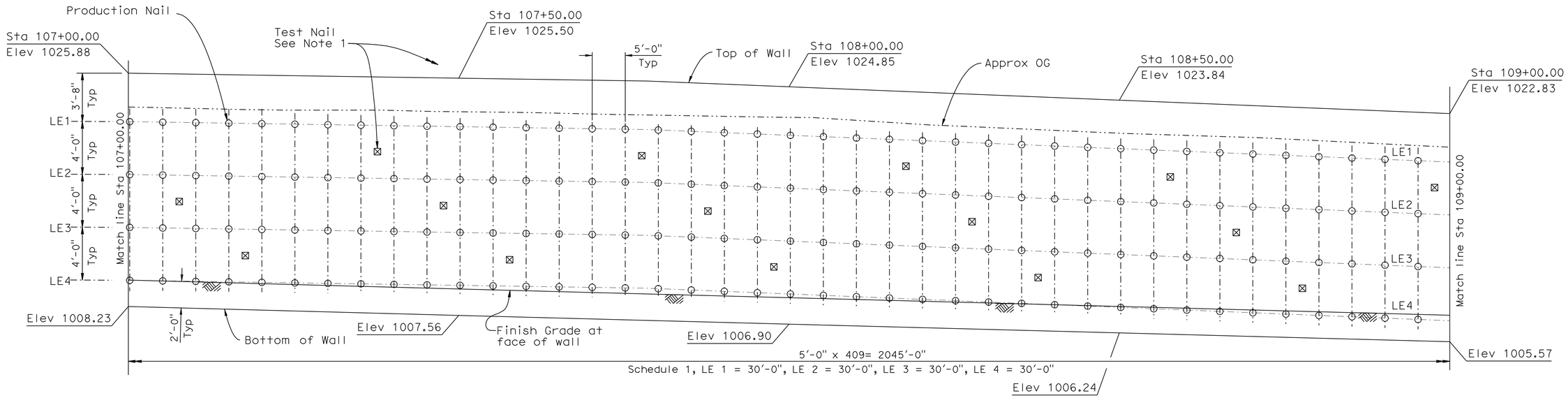

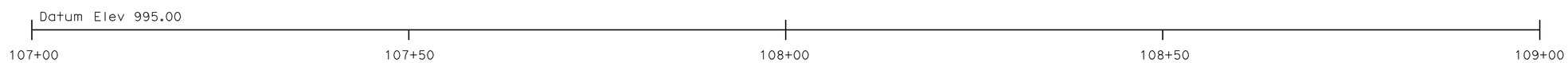

MIRROR SOIL NAIL LAYOUT

Horiz: 1/8" = 1'-0"
Vert: 1/4" = 1'-0"

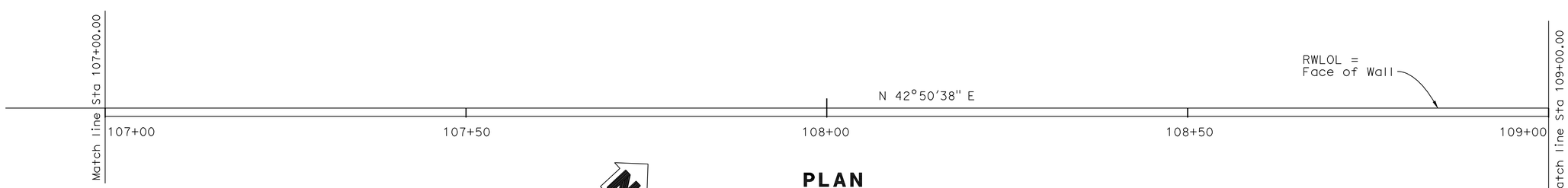

PLAN

1/8" = 1'-0"

NOTE:
THE CONTRACTOR SHALL VERIFY ALL CONTROLLING FIELD DIMENSIONS BEFORE ORDERING OR FABRICATING ANY MATERIAL.

	BY	CHECKED
DESIGN	M. Vo	C. Duan
DETAILS	G. Hallstrom	C. Duan
QUANTITIES	A. McPhee	F. Chen

STATE OF CALIFORNIA
DEPARTMENT OF TRANSPORTATION

DIVISION OF ENGINEERING SERVICES
STRUCTURE DESIGN
DESIGN BRANCH 10

BRIDGE NO. 54E0045
POST MILE 1.79

RETAINING WALL NO. 104
STRUCTURE PLAN NO. 3

STRUCTURES DESIGN DETAIL SHEET (ENGLISH) (REV. 09-01-10)

ORIGINAL SCALE IN INCHES FOR REDUCED PLANS 0 1 2 3

UNIT: 3589
PROJECT NUMBER & PHASE: 08000005061
CONTRACT NO.: 08-0M9401

DISREGARD PRINTS BEARING EARLIER REVISION DATES

REVISION DATES: 8-23-11 11-07-11 12-14-11 1-06-12

SHEET 5 OF 27

FILE => 54e0045csp05.dgn

USERNAME => s124496 DATE PLOTTED => 14-JUN-2012 TIME PLOTTED => 06:17

DIST	COUNTY	ROUTE	POST MILES TOTAL PROJECT	SHEET No.	TOTAL SHEETS
08	Riv,SBd	91,215	21.5/21.7, 43.2/45.2,0.0/5.1	1273	1743

REGISTERED CIVIL ENGINEER 4-06-12 DATE

4-16-12
PLANS APPROVAL DATE

REGISTERED PROFESSIONAL ENGINEER LARRY WU No. C57035 Exp. 6-30-13 CIVIL STATE OF CALIFORNIA

The State of California or its officers or agents shall not be responsible for the accuracy or completeness of electronic copies of this plan sheet.

NOTES:

1. Test nail locations are at midway between production nails. The exact location of the proof test nails to be determined in the field by the Engineer.
2. Contractor shall adjust the concrete gutter to meet the gutter flow line.
3. Cable Railing is not shown for clarity.

LEGEND:

○ Indicates location of Production Nail assembly.

⊠ Indicates location of Test Nail assembly, see Note 1.

—·—LE# Indicates Soil Nail Profile Line.

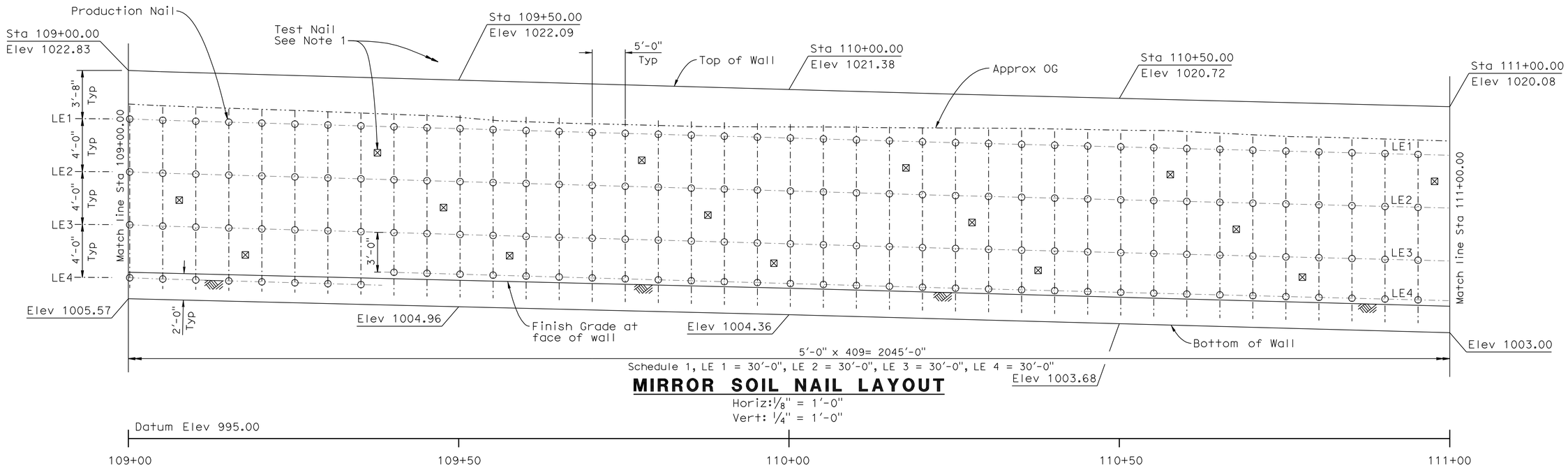

MIRROR SOIL NAIL LAYOUT

Horiz: 1/8" = 1'-0"
Vert: 1/4" = 1'-0"

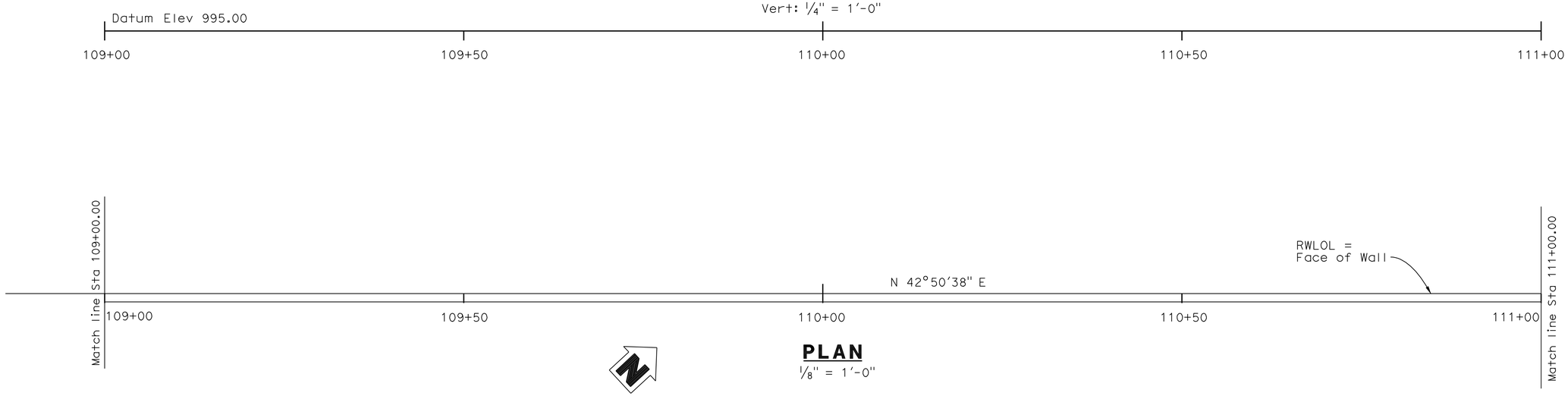

PLAN

1/8" = 1'-0"

NOTE:
THE CONTRACTOR SHALL VERIFY ALL CONTROLLING FIELD DIMENSIONS BEFORE ORDERING OR FABRICATING ANY MATERIAL.

	BY	CHECKED
DESIGN	M. Vo	C. Duan
DETAILS	G. Hallstrom	C. Duan
QUANTITIES	A. McPhee	F. Chen

STATE OF CALIFORNIA
DEPARTMENT OF TRANSPORTATION

DIVISION OF ENGINEERING SERVICES
STRUCTURE DESIGN
DESIGN BRANCH 10

BRIDGE NO. 54E0045
POST MILE 1.79

RETAINING WALL NO. 104
STRUCTURE PLAN NO. 4

STRUCTURES DESIGN DETAIL SHEET (ENGLISH) (REV. 09-01-10)

ORIGINAL SCALE IN INCHES FOR REDUCED PLANS 0 1 2 3

UNIT: 3589
PROJECT NUMBER & PHASE: 08000005061
CONTRACT NO.: 08-0M9401

DISREGARD PRINTS BEARING EARLIER REVISION DATES

REVISION DATES 8-23-11 11-08-11 12-14-11 1-06-12

SHEET 6 OF 27

FILE => 54e0045csp06.dgn

USERNAME => s124496 DATE PLOTTED => 14-JUN-2012 TIME PLOTTED => 08:17

DIST	COUNTY	ROUTE	POST MILES TOTAL PROJECT	SHEET No.	TOTAL SHEETS
08	Riv,SBd	91,215	21.5/21.7, 43.2/45.2,0.0/5.1	1274	1743

REGISTERED CIVIL ENGINEER 4-06-12 DATE

4-16-12
PLANS APPROVAL DATE

REGISTERED PROFESSIONAL ENGINEER LARRY WU No. C57035 Exp. 6-30-13 CIVIL STATE OF CALIFORNIA

The State of California or its officers or agents shall not be responsible for the accuracy or completeness of electronic copies of this plan sheet.

NOTES:

1. Test nail locations are at midway between production nails. The exact location of the proof test nails to be determined in the field by the Engineer.
2. Contractor shall adjust the concrete gutter to meet the gutter flow line.
3. Cable Railing is not shown for clarity.

LEGEND:

- ○ Indicates location of Production Nail assembly.
- ⊠ Indicates location of Test Nail assembly, see Note 1.
- —·—LE# Indicates Soil Nail Profile Line.

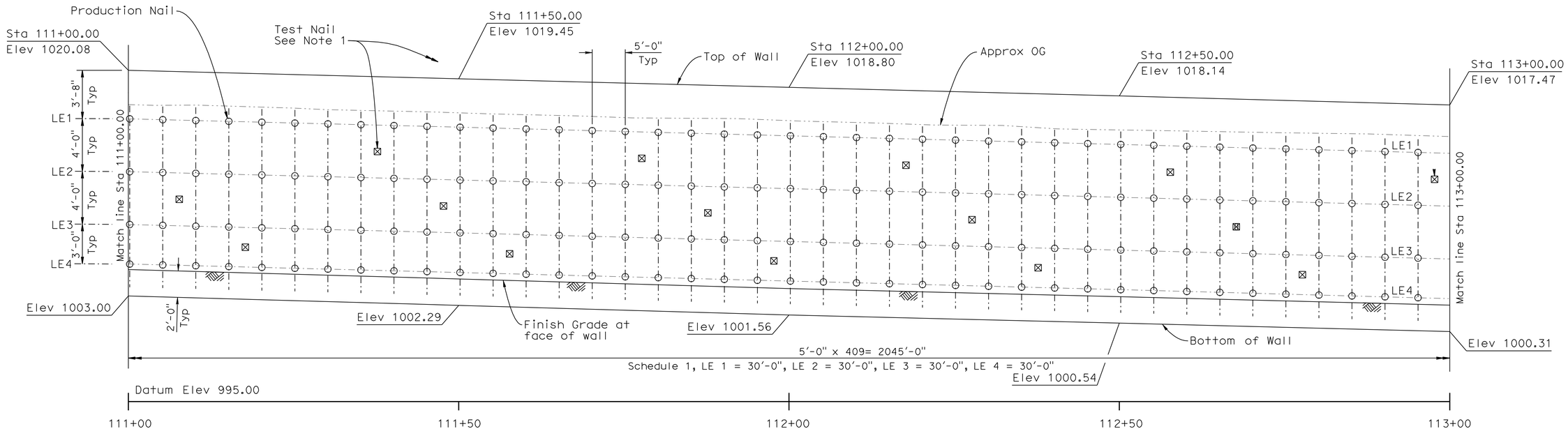

MIRROR SOIL NAIL LAYOUT

Horiz: 1/8" = 1'-0"
Vert: 1/4" = 1'-0"

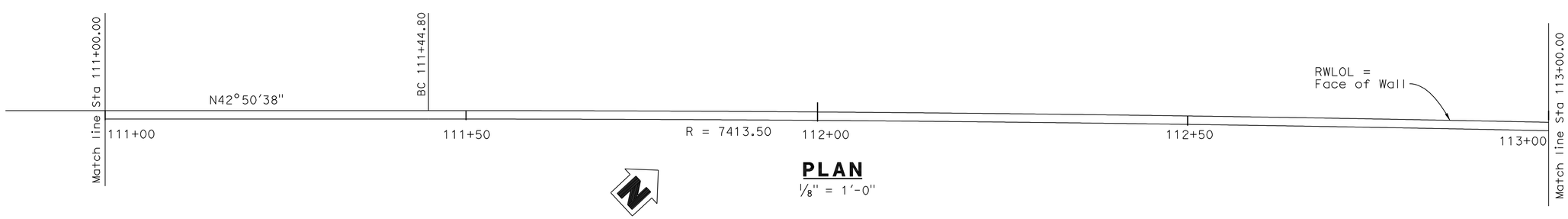

PLAN

1/8" = 1'-0"

NOTE:
THE CONTRACTOR SHALL VERIFY ALL CONTROLLING FIELD DIMENSIONS BEFORE ORDERING OR FABRICATING ANY MATERIAL.

DESIGN	BY M. Vo	CHECKED C. Duan	
DETAILS	BY G. Hallstrom	CHECKED C. Duan	
QUANTITIES	BY A. McPhee	CHECKED F. Chen	

STATE OF CALIFORNIA
DEPARTMENT OF TRANSPORTATION

DIVISION OF ENGINEERING SERVICES
STRUCTURE DESIGN
DESIGN BRANCH 10

BRIDGE NO. 54E0045
POST MILE 1.79

RETAINING WALL NO. 104
STRUCTURE PLAN NO. 5

STRUCTURES DESIGN DETAIL SHEET (ENGLISH) (REV. 09-01-10)

ORIGINAL SCALE IN INCHES FOR REDUCED PLANS 0 1 2 3

UNIT: 3589
PROJECT NUMBER & PHASE: 08000005061
CONTRACT NO.: 08-0M9401

DISREGARD PRINTS BEARING EARLIER REVISION DATES

REVISION DATES 8-23-11 11-08-11 12-14-11 1-06-12

SHEET 7 OF 27

FILE => 54e0045csp07.dgn

USERNAME => s124496 DATE PLOTTED => 14-JUN-2012 TIME PLOTTED => 08:17

DIST	COUNTY	ROUTE	POST MILES TOTAL PROJECT	SHEET No.	TOTAL SHEETS
08	Riv,SBd	91,215	21.5/21.7, 43.2/45.2,0.0/5.1	1275	1743

REGISTERED CIVIL ENGINEER 4-06-12 DATE

4-16-12
PLANS APPROVAL DATE

REGISTERED PROFESSIONAL ENGINEER LARRY WU No. C57035 Exp. 6-30-13 CIVIL STATE OF CALIFORNIA

The State of California or its officers or agents shall not be responsible for the accuracy or completeness of electronic copies of this plan sheet.

NOTES:

1. Test nail locations are at midway between production nails. The exact location of the proof test nails to be determined in the field by the Engineer.
2. Contractor shall adjust the concrete gutter to meet the gutter flow line.
3. Cable Railing is not shown for clarity.

LEGEND:

○ Indicates location of Production Nail assembly.

⊠ Indicates location of Test Nail assembly, see Note 1.

—·—LE# Indicates Soil Nail Profile Line.

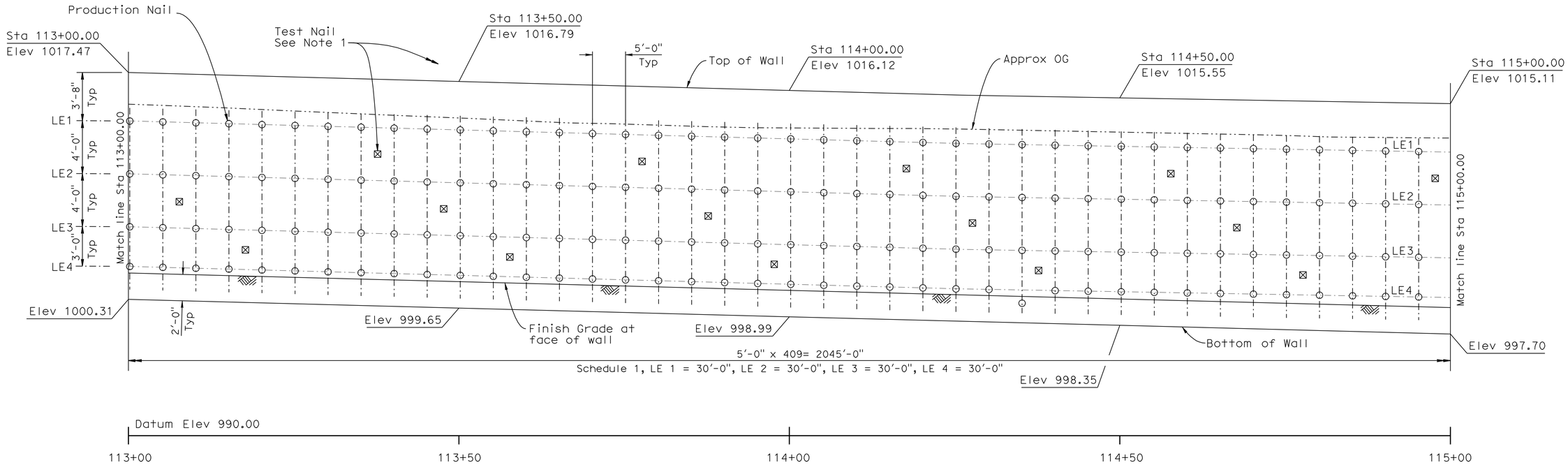

MIRROR SOIL NAIL LAYOUT

Horiz: 1/8" = 1'-0"
Vert: 1/4" = 1'-0"

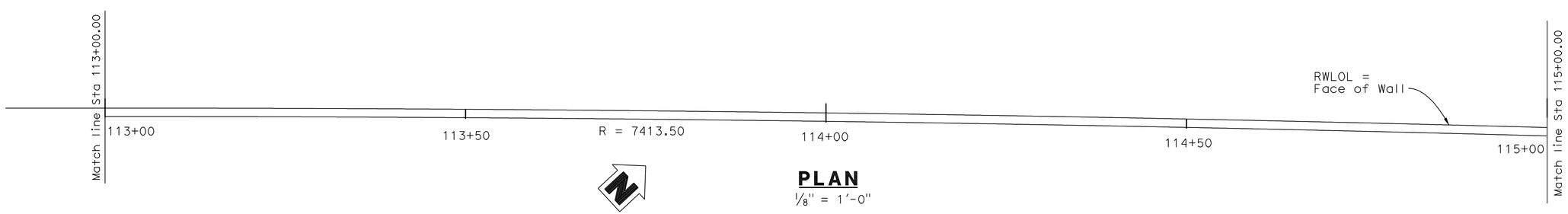

PLAN

1/8" = 1'-0"

NOTE:
THE CONTRACTOR SHALL VERIFY ALL CONTROLLING FIELD DIMENSIONS BEFORE ORDERING OR FABRICATING ANY MATERIAL.

DESIGN	BY M. Vo	CHECKED C. Duan	
DETAILS	BY G. Hallstrom	CHECKED C. Duan	
QUANTITIES	BY A. McPhee	CHECKED F. Chen	

STATE OF CALIFORNIA
DEPARTMENT OF TRANSPORTATION

DIVISION OF ENGINEERING SERVICES
STRUCTURE DESIGN
DESIGN BRANCH 10

BRIDGE NO. 54E0045
POST MILE 1.79

RETAINING WALL NO. 104
STRUCTURE PLAN NO. 6

STRUCTURES DESIGN DETAIL SHEET (ENGLISH) (REV. 09-01-10)

ORIGINAL SCALE IN INCHES FOR REDUCED PLANS 0 1 2 3

UNIT: 3589
PROJECT NUMBER & PHASE: 08000005061
CONTRACT NO.: 08-0M9401

DISREGARD PRINTS BEARING EARLIER REVISION DATES

REVISION DATES 8-23-11 11-08-11 12-14-11 1-06-12

SHEET 8 OF 27

FILE => 54e0045csp08.dgn

USERNAME => s124496 DATE PLOTTED => 14-JUN-2012 TIME PLOTTED => 06:17

DIST	COUNTY	ROUTE	POST MILES TOTAL PROJECT	SHEET No.	TOTAL SHEETS
08	Riv,SBd	91,215	21.5/21.7, 43.2/45.2,0.0/5.1	1276	1743

REGISTERED CIVIL ENGINEER 4-06-12 DATE

4-16-12
PLANS APPROVAL DATE

REGISTERED PROFESSIONAL ENGINEER LARRY WU No. C57035 Exp. 6-30-13 CIVIL STATE OF CALIFORNIA

The State of California or its officers or agents shall not be responsible for the accuracy or completeness of electronic copies of this plan sheet.

NOTES:

1. Test nail locations are at midway between production nails. The exact location of the proof test nails to be determined in the field by the Engineer.
2. Contractor shall adjust the concrete gutter to meet the gutter flow line.
3. Cable Railing is not shown for clarity.

LEGEND:

○ Indicates location of Production Nail assembly.

⊠ Indicates location of Test Nail assembly, see Note 1.

—·—LE# Indicates Soil Nail Profile Line.

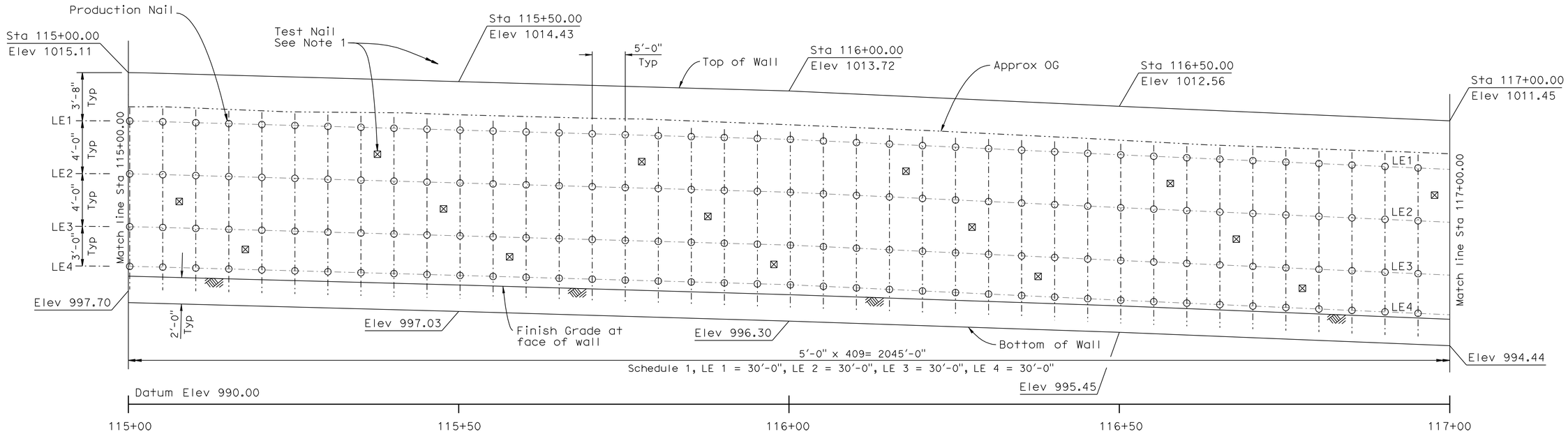

MIRROR SOIL NAIL LAYOUT

Horiz: 1/8" = 1'-0"
Vert: 1/4" = 1'-0"

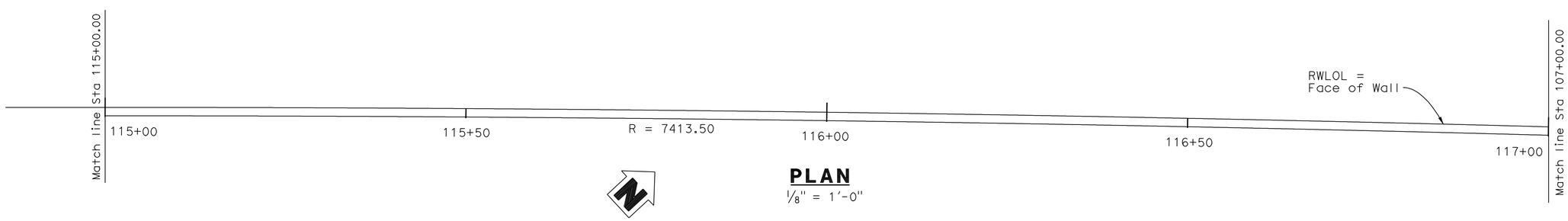

PLAN

1/8" = 1'-0"

NOTE:
THE CONTRACTOR SHALL VERIFY ALL CONTROLLING FIELD DIMENSIONS BEFORE ORDERING OR FABRICATING ANY MATERIAL.

	BY	CHECKED
DESIGN	M. Vo	C. Duan
DETAILS	G. Hallstrom	C. Duan
QUANTITIES	A. McPhee	F. Chen

STATE OF CALIFORNIA
DEPARTMENT OF TRANSPORTATION

DIVISION OF ENGINEERING SERVICES
STRUCTURE DESIGN
DESIGN BRANCH 10

BRIDGE NO. 54E0045
POST MILE 1.79

RETAINING WALL NO. 104
STRUCTURE PLAN NO. 7

STRUCTURES DESIGN DETAIL SHEET (ENGLISH) (REV. 09-01-10)

ORIGINAL SCALE IN INCHES FOR REDUCED PLANS 0 1 2 3

UNIT: 3589
PROJECT NUMBER & PHASE: 08000005061
CONTRACT NO.: 08-0M9401

DISREGARD PRINTS BEARING EARLIER REVISION DATES

REVISION DATES 8-23-11 11-08-11 12-14-11 1-06-12

SHEET 9 OF 27

FILE => 54e0045csp09.dgn

USERNAME => s124496 DATE PLOTTED => 14-JUN-2012 TIME PLOTTED => 08:17

DIST	COUNTY	ROUTE	POST MILES TOTAL PROJECT	SHEET No.	TOTAL SHEETS
08	Riv,SBd	91,215	21.5/21.7, 43.2/45.2,0.0/5.1	1277	1743

REGISTERED CIVIL ENGINEER 4-06-12 DATE

4-16-12
PLANS APPROVAL DATE

REGISTERED PROFESSIONAL ENGINEER LARRY WU No. C57035 Exp. 6-30-13 CIVIL STATE OF CALIFORNIA

The State of California or its officers or agents shall not be responsible for the accuracy or completeness of electronic copies of this plan sheet.

NOTES:

1. Test nail locations are at midway between production nails. The exact location of the proof test nails to be determined in the field by the Engineer.
2. Contractor shall adjust the concrete gutter to meet the gutter flow line.
3. Cable Railing is not shown for clarity.

LEGEND:

○ Indicates location of Production Nail assembly.

⊠ Indicates location of Test Nail assembly, see Note 1.

—·—LE# Indicates Soil Nail Profile Line.

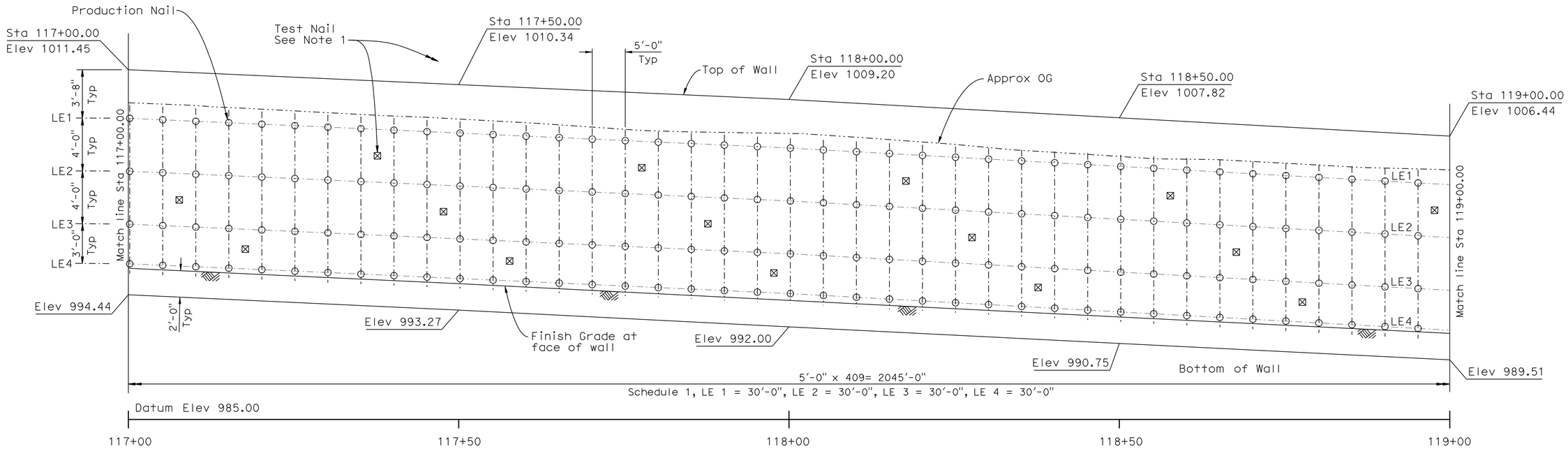

MIRROR SOIL NAIL LAYOUT

Horiz: 1/8" = 1'-0"
Vert: 1/4" = 1'-0"

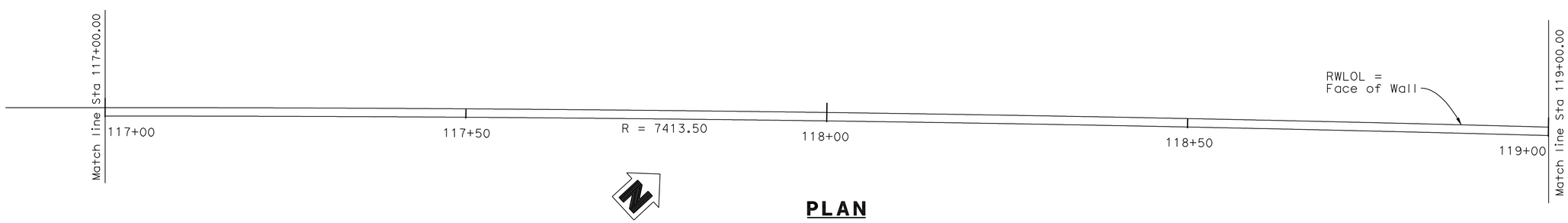

PLAN

1/8" = 1'-0"

NOTE:
THE CONTRACTOR SHALL VERIFY ALL CONTROLLING FIELD DIMENSIONS BEFORE ORDERING OR FABRICATING ANY MATERIAL.

	BY	CHECKED
DESIGN	M. Vo	C. Duan
DETAILS	G. Hallstrom	C. Duan
QUANTITIES	A. McPhee	F. Chen

STATE OF CALIFORNIA
DEPARTMENT OF TRANSPORTATION

DIVISION OF ENGINEERING SERVICES
STRUCTURE DESIGN
DESIGN BRANCH 10

BRIDGE NO. 54E0045
POST MILE 1.79

RETAINING WALL NO. 104
STRUCTURE PLAN NO. 8

STRUCTURES DESIGN DETAIL SHEET (ENGLISH) (REV. 09-01-10)

ORIGINAL SCALE IN INCHES FOR REDUCED PLANS 0 1 2 3

UNIT: 3589
PROJECT NUMBER & PHASE: 08000005061
CONTRACT NO.: 08-0M9401

DISREGARD PRINTS BEARING EARLIER REVISION DATES

REVISION DATES: 8-26-11 11-04-11 12-14-11 1-06-12

SHEET 10 OF 27

FILE => 54e0045csp10.dgn

USERNAME => s124096 DATE PLOTTED => 14-JUN-2012 TIME PLOTTED => 06:18

DIST	COUNTY	ROUTE	POST MILES TOTAL PROJECT	SHEET No.	TOTAL SHEETS
08	Riv,SBd	91,215	21.5/21.7, 43.2/45.2,0.0/5.1	1278	1743

REGISTERED CIVIL ENGINEER 4-06-12 DATE

4-16-12
PLANS APPROVAL DATE

REGISTERED PROFESSIONAL ENGINEER LARRY WU No. C57035 Exp. 6-30-13 CIVIL STATE OF CALIFORNIA

The State of California or its officers or agents shall not be responsible for the accuracy or completeness of electronic copies of this plan sheet.

NOTES:

1. Test nail locations are at midway between production nails. The exact location of the proof test nails to be determined in the field by the Engineer.
2. Contractor shall adjust the concrete gutter to meet the gutter flow line.
3. Cable Railing is not shown for clarity.

LEGEND:

- ○ Indicates location of Production Nail assembly.
- ⊠ Indicates location of Test Nail assembly, see Note 1.
- —·—LE# Indicates Soil Nail Profile Line.

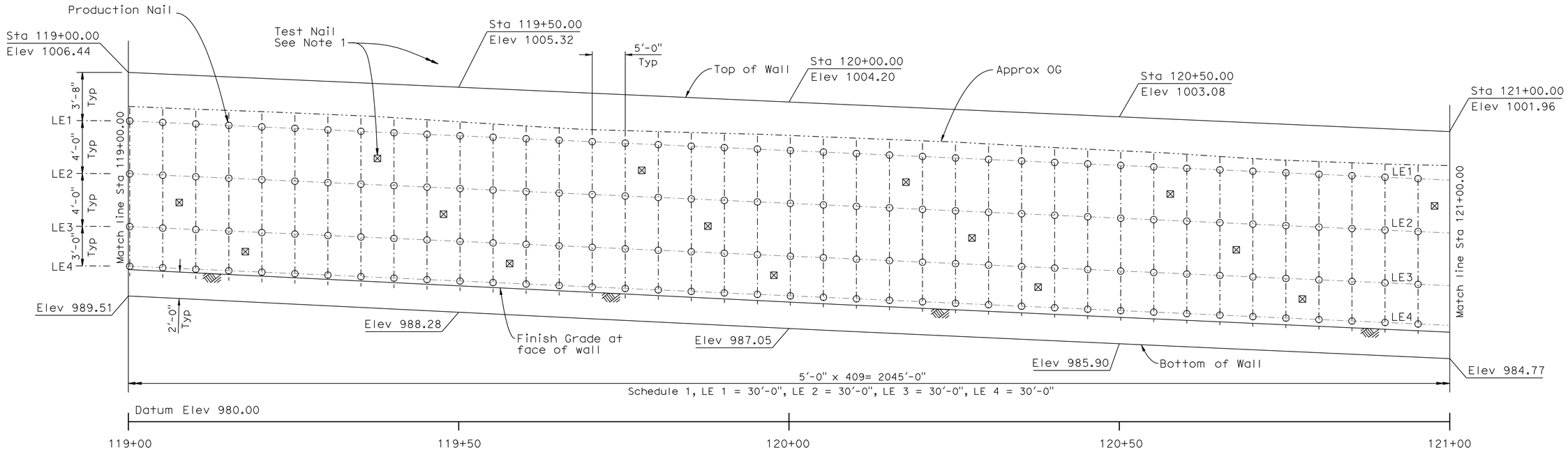

MIRROR SOIL NAIL LAYOUT

Horiz: 1/8" = 1'-0"
Vert: 1/4" = 1'-0"

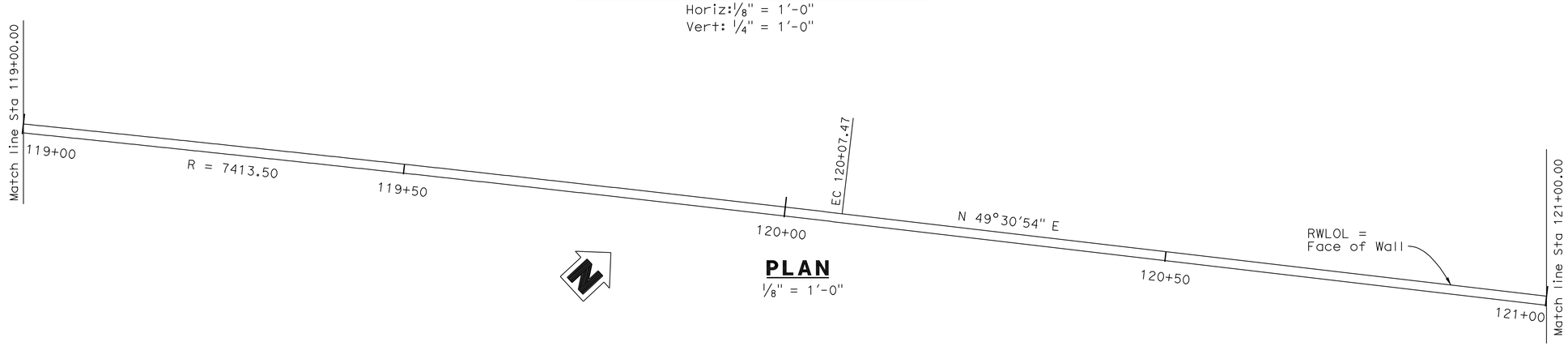

PLAN

1/8" = 1'-0"

NOTE:
THE CONTRACTOR SHALL VERIFY ALL CONTROLLING FIELD DIMENSIONS BEFORE ORDERING OR FABRICATING ANY MATERIAL.

DESIGN	BY M. Vo	CHECKED C. Duan	
DETAILS	BY G. Hallstrom	CHECKED C. Duan	
QUANTITIES	BY A. McPhee	CHECKED F. Chen	

STATE OF CALIFORNIA
DEPARTMENT OF TRANSPORTATION

DIVISION OF ENGINEERING SERVICES
STRUCTURE DESIGN
DESIGN BRANCH 10

BRIDGE NO. 54E0045
POST MILE 1.79

RETAINING WALL NO. 104
STRUCTURE PLAN NO. 9

STRUCTURES DESIGN DETAIL SHEET (ENGLISH) (REV. 09-01-10)

ORIGINAL SCALE IN INCHES FOR REDUCED PLANS 0 1 2 3

UNIT: 3589
PROJECT NUMBER & PHASE: 08000005061
CONTRACT NO.: 08-0M9401

DISREGARD PRINTS BEARING EARLIER REVISION DATES

REVISION DATES: 8-24-11 11-08-11 12-14-11 1-06-12

SHEET 11 OF 27

FILE => 54e0045csp11.dgn

USERNAME => s124496 DATE PLOTTED => 14-JUN-2012 TIME PLOTTED => 06:18

DIST	COUNTY	ROUTE	POST MILES TOTAL PROJECT	SHEET No.	TOTAL SHEETS
08	Riv,SBd	91,215	21.5/21.7, 43.2/45.2,0.0/5.1	1279	1743

REGISTERED CIVIL ENGINEER — DATE 4-06-12

4-16-12
PLANS APPROVAL DATE

REGISTERED PROFESSIONAL ENGINEER — LARRY WU No. C57035 Exp. 6-30-13 CIVIL — STATE OF CALIFORNIA

The State of California or its officers or agents shall not be responsible for the accuracy or completeness of electronic copies of this plan sheet.

NOTES:

1. Test nail locations are at midway between production nails. The exact location of the proof test nails to be determined in the field by the Engineer.
2. Contractor shall adjust the concrete gutter to meet the gutter flow line.
3. Cable Railing is not shown for clarity.

LEGEND:

- ○ Indicates location of Production Nail assembly.
- ⊠ Indicates location of Test Nail assembly, see Note 1.
- —·—LE# Indicates Soil Nail Profile Line.

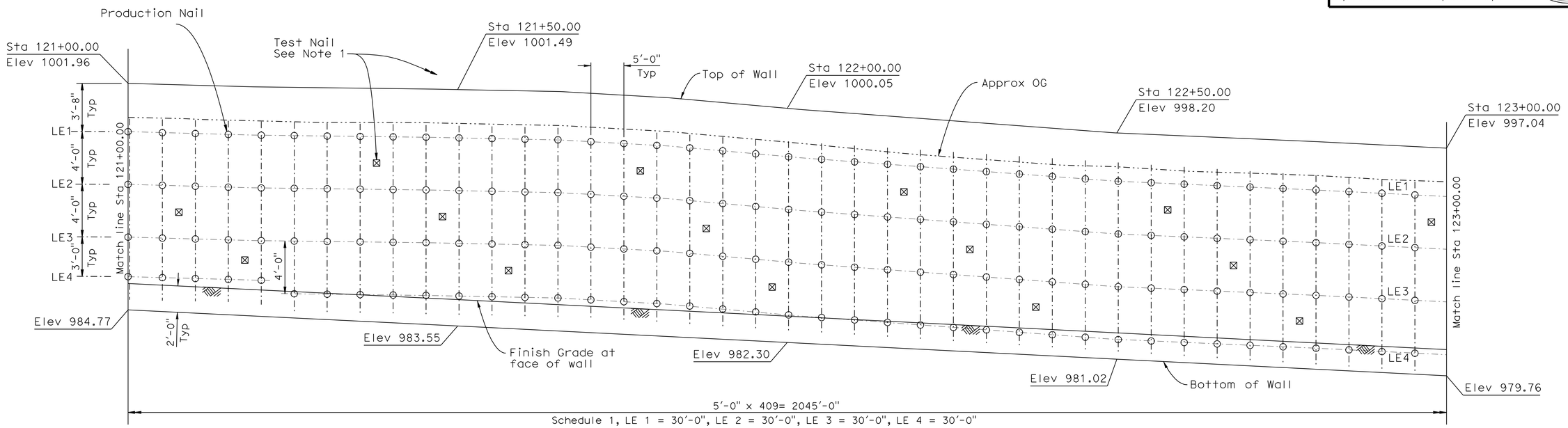

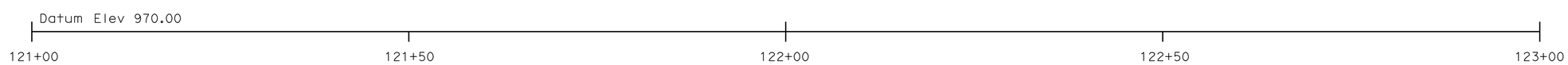

MIRROR SOIL NAIL LAYOUT

Horiz: 1/8" = 1'-0"
Vert: 1/4" = 1'-0"

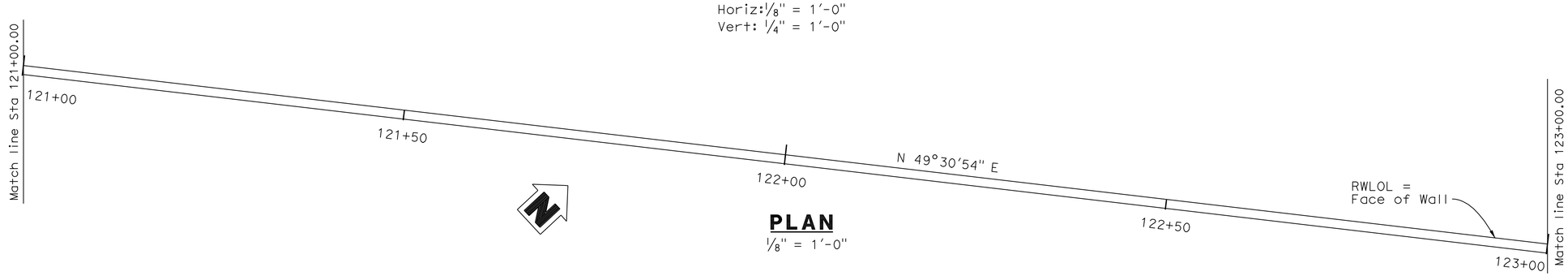

PLAN

1/8" = 1'-0"

NOTE:
THE CONTRACTOR SHALL VERIFY ALL CONTROLLING FIELD DIMENSIONS BEFORE ORDERING OR FABRICATING ANY MATERIAL.

DESIGN	BY M. Vo	CHECKED C. Duan	
DETAILS	BY G. Hallstrom	CHECKED C. Duan	
QUANTITIES	BY A. McPhee	CHECKED F. Chen	

STATE OF CALIFORNIA
DEPARTMENT OF TRANSPORTATION

DIVISION OF ENGINEERING SERVICES
STRUCTURE DESIGN
DESIGN BRANCH 10

BRIDGE NO. 54E0045
POST MILE 1.79

RETAINING WALL NO. 104
STRUCTURE PLAN NO. 10

STRUCTURES DESIGN DETAIL SHEET (ENGLISH) (REV. 09-01-10)

ORIGINAL SCALE IN INCHES FOR REDUCED PLANS 0 1 2 3

UNIT: 3589
PROJECT NUMBER & PHASE: 08000005061
CONTRACT NO.: 08-0M9401

DISREGARD PRINTS BEARING EARLIER REVISION DATES

REVISION DATES: 8-24-11 11-08-11 12-14-11 1-06-12

SHEET 12 OF 27

FILE => 54e0045csp12.dgn

USERNAME => s124496 DATE PLOTTED => 14-JUN-2012 TIME PLOTTED => 06:18

DIST	COUNTY	ROUTE	POST MILES TOTAL PROJECT	SHEET No.	TOTAL SHEETS
08	Riv,SBd	91,215	21.5/21.7, 43.2/45.2,0.0/5.1	1280	1743

REGISTERED CIVIL ENGINEER — DATE 4-06-12

4-16-12
PLANS APPROVAL DATE

REGISTERED PROFESSIONAL ENGINEER — LARRY WU — No. C57035 — Exp. 6-30-13 — CIVIL — STATE OF CALIFORNIA

The State of California or its officers or agents shall not be responsible for the accuracy or completeness of electronic copies of this plan sheet.

NOTES:

1. Test nail locations are at midway between production nails. The exact location of the proof test nails to be determined in the field by the Engineer.
2. Contractor shall adjust the concrete gutter to meet the gutter flow line.
3. Cable Railing is not shown for clarity.

LEGEND:

- ○ Indicates location of Production Nail assembly.
- ⊠ Indicates location of Test Nail assembly, see Note 1.
- —·—LE# Indicates Soil Nail Profile Line.

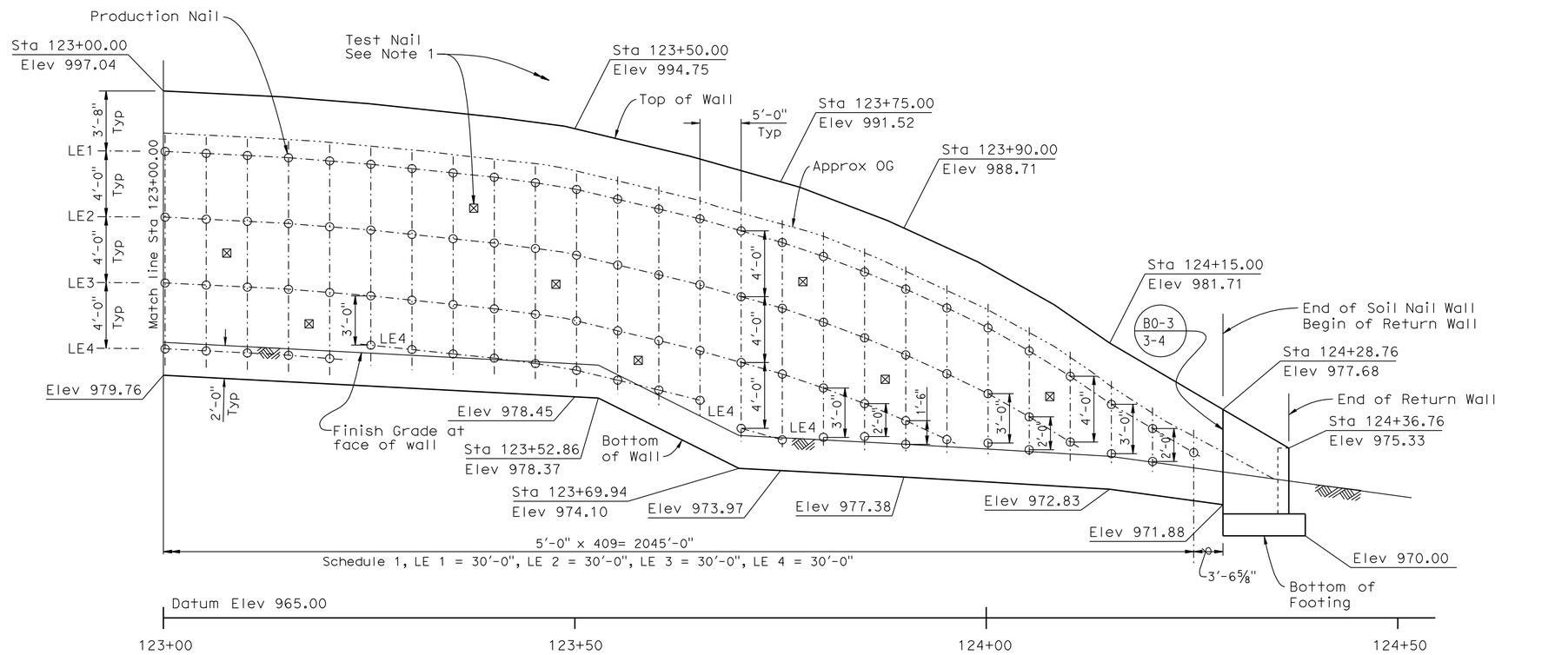

MIRROR SOIL NAIL LAYOUT

Horiz: ⅛" = 1'-0"
Vert: ¼" = 1'-0"

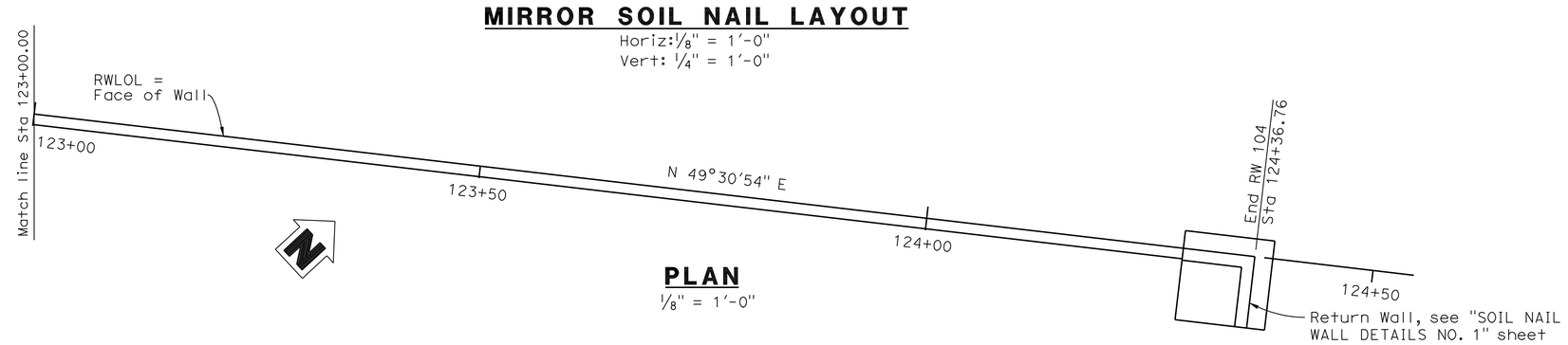

PLAN

⅛" = 1'-0"

DESIGN	BY M. Vo	CHECKED C. Duan	
DETAILS	BY G. Hallstrom	CHECKED C. Duan	
QUANTITIES	BY A. McPhee	CHECKED F. Chen	

STATE OF CALIFORNIA
DEPARTMENT OF TRANSPORTATION

DIVISION OF ENGINEERING SERVICES
STRUCTURE DESIGN
DESIGN BRANCH 10

BRIDGE NO. 54E0045
POST MILE 1.79

RETAINING WALL NO. 104
STRUCTURE PLAN NO. 11

STRUCTURES DESIGN DETAIL SHEET (ENGLISH) (REV. 09-01-10)

ORIGINAL SCALE IN INCHES FOR REDUCED PLANS 0 1 2 3

UNIT: 3589
PROJECT NUMBER & PHASE: 08000005061
CONTRACT NO.: 08-0M9401

DISREGARD PRINTS BEARING EARLIER REVISION DATES

REVISION DATES: 8-24-11 3-12-12 1-09-12

SHEET 13 OF 27

FILE => 54e0045csp13.dgn

USERNAME => s124496 DATE PLOTTED => 14-JUN-2012 TIME PLOTTED => 06:18

DIST	COUNTY	ROUTE	POST MILES TOTAL PROJECT	SHEET No.	TOTAL SHEETS
08	Riv,SBd	91,215	21.5/21.7, 43.2/45.2,0.0/5.1	1281	1743

REGISTERED CIVIL ENGINEER — DATE 4-06-12

4-16-12
PLANS APPROVAL DATE

REGISTERED PROFESSIONAL ENGINEER — LARRY WU No. C57035 Exp. 6-30-13 CIVIL — STATE OF CALIFORNIA

The State of California or its officers or agents shall not be responsible for the accuracy or completeness of electronic copies of this plan sheet.

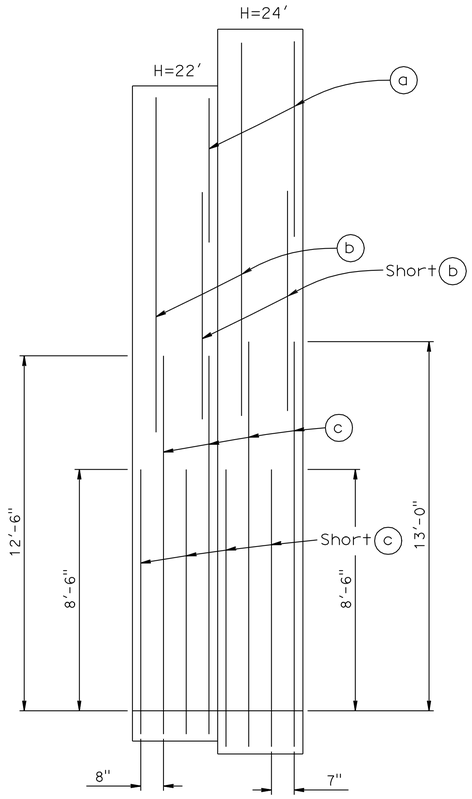

ELEVATION

No Scale
For details not shown, see B3-1

TABLE OF REINFORCING STEEL DIMENSIONS AND DATA		
Design H	22′	24′
W	14′-6″	16′-3″
C	3′-11″	4′-5″
B	10′-7″	11′-10″
F Spread footing	2′-0″	2′-0″
T	2′-0″	2′-0″
ⓐ Bars	#5 @32	#5 @28
ⓑ Bars	#8 @16	#8 @14
ⓒ Bars	#11@ 8	#11@ 7
ⓓ Bars	#11@ 8	#11@ 7
ⓔ Bars	#5 @ 8	#5 @ 7
ⓕ Bars	2-#5	2-#5
ⓖ Bars	#5 @16	#5 @14

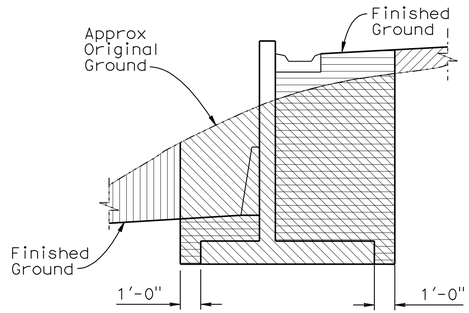

TYPE 1 WALL EXCAVATION & BACKFILL

NO SCALE

Sta 103+67.18 to Sta 103+75.00
Sta 124+28.76 to Sta 124+36.76

LEGEND:

- Structure Excavation
- Structure Backfill
- Roadway Excavation (see Roadway Plan)
- Roadway Backfill (see Roadway Plan)

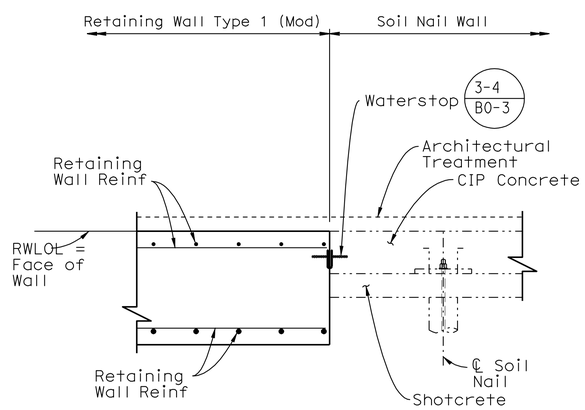

SECTION C-C

3/4″ = 1′-0″

NOTE: For location of "Section C-C", see "STRUCTURE PLAN NO. 1" sheet.

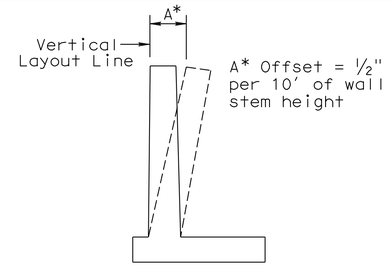

WALL OFFSET

No Scale
Values for offsetting forms to be determined by the Engineer

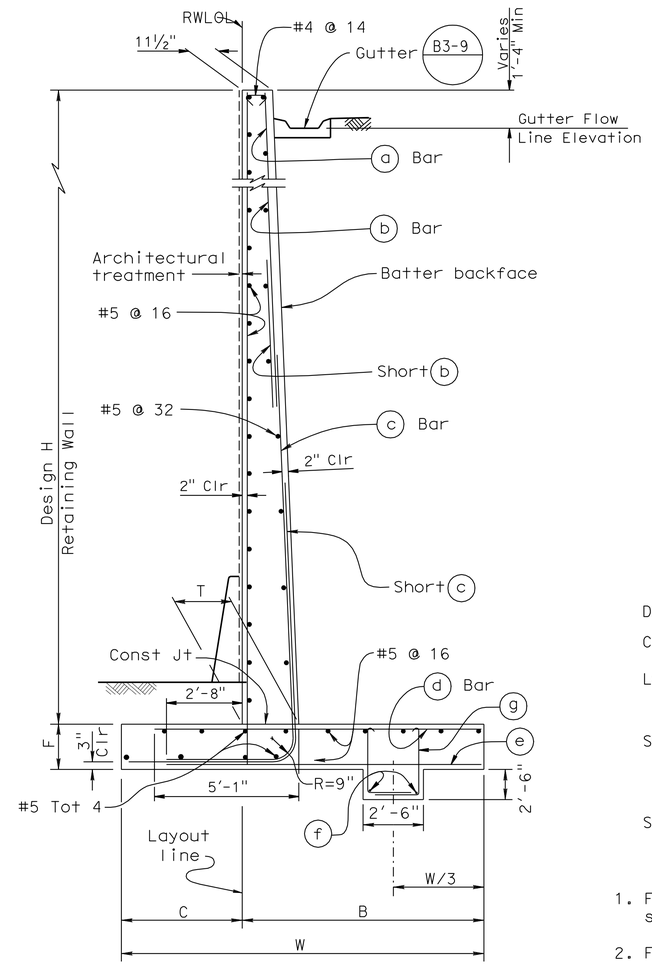

SPREAD FOOTING SECTION

No Scale

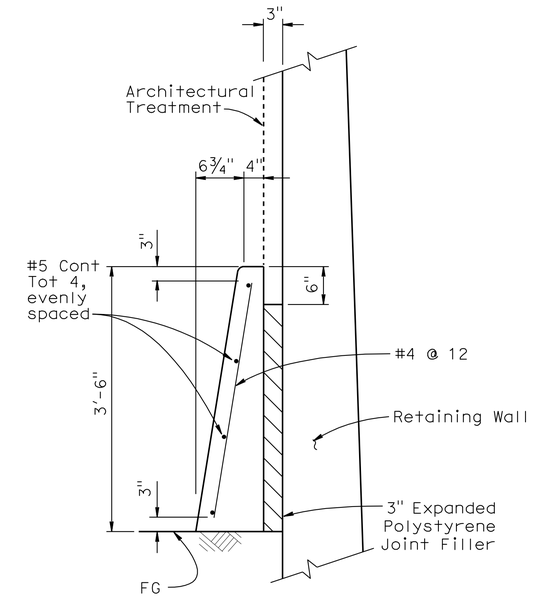

CONCRETE BARRIER (TYPE 60D MOD)

No scale

DESIGN DATA

DESIGN: AASHTO LFD

CONCRETE: Reinforced Concrete, f′c = 3600 psi
fy = 60,000 psi

LOADING CASE:
Level ground
Wind Load = 30 psf

SEISMIC LOAD: SOIL
Kh = 0.2g
Kv = 0.0
Kae : Mononobe-Okabe Method

SOIL: ϕ = 32° γ = 125 pcf C=0

GENERAL NOTES

1. For retaining wall architectural treatment, see "ARCHITECTURAL TREATMENT DETAILS" sheet.
2. For details not shown and drainage notes, see B3-8
3. Footing cover, 1′-6″ minimum.
4. Limit of no splicing rebars = 3 times the bottom thickness of the stem.

	BY	CHECKED
DESIGN	M. Vo	C. Duan
DETAILS	G. Hallstrom	C. Duan
QUANTITIES	A. McPhee	F. Chen

STATE OF CALIFORNIA
DEPARTMENT OF TRANSPORTATION

DIVISION OF ENGINEERING SERVICES
STRUCTURE DESIGN
DESIGN BRANCH 10

BRIDGE NO. 54E0045
POST MILE 1.79

RETAINING WALL NO. 104
RETAINING WALL TYPE 1 (MOD) DETAILS

STRUCTURES DESIGN DETAIL SHEET (ENGLISH) (REV. 09-01-10)

ORIGINAL SCALE IN INCHES FOR REDUCED PLANS 0 1 2 3

UNIT: 3589
PROJECT NUMBER & PHASE: 08000005061
CONTRACT NO.: 08-0M9401

DISREGARD PRINTS BEARING EARLIER REVISION DATES

REVISION DATES: 8-18-11 11-08-11 1-09-12 3-12-12

SHEET 14 OF 27

FILE => 54e0045grwdt14.dgn

USERNAME => s124496 DATE PLOTTED => 14-JUN-2012 TIME PLOTTED => 06:18

DIST	COUNTY	ROUTE	POST MILES TOTAL PROJECT	SHEET No.	TOTAL SHEETS
08	Riv,SBd	91,215	21.5/21.7, 43.2/45.2,0.0/5.1	1282	1743

REGISTERED CIVIL ENGINEER — DATE 4-06-12

4-16-12
PLANS APPROVAL DATE

REGISTERED PROFESSIONAL ENGINEER — LARRY WU No. C57035 Exp. 6-30-13 CIVIL — STATE OF CALIFORNIA

The State of California or its officers or agents shall not be responsible for the accuracy or completeness of electronic copies of this plan sheet.

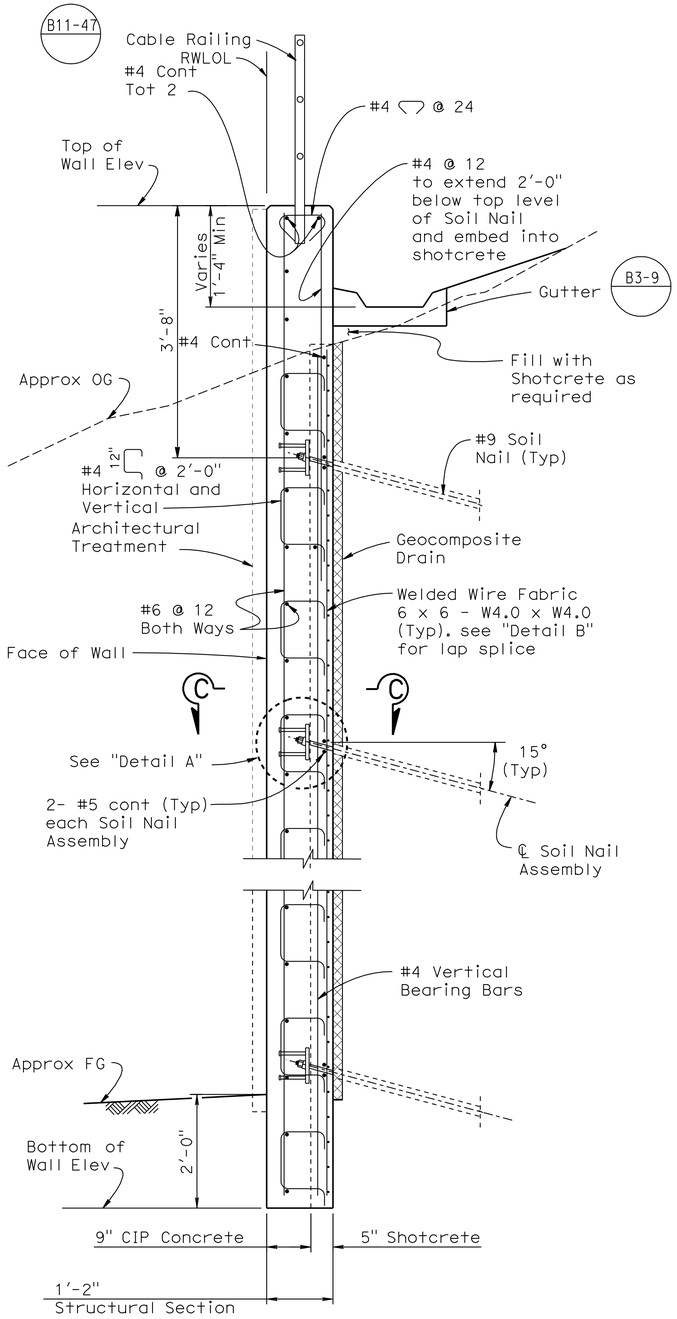

TYPICAL SECTION

3/4" = 1'-0"

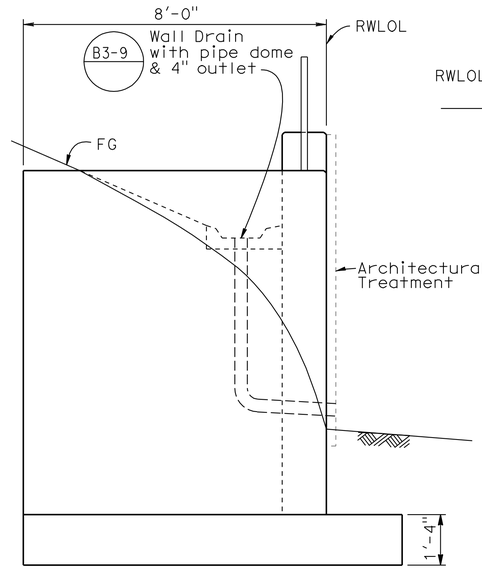

RETURN WALL ELEVATION

1/2" = 1'-0"

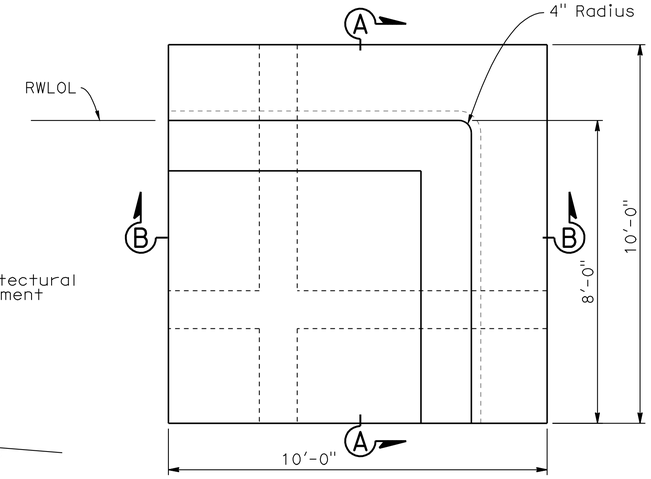

RETURN WALL PLAN

1/2" = 1'-0"

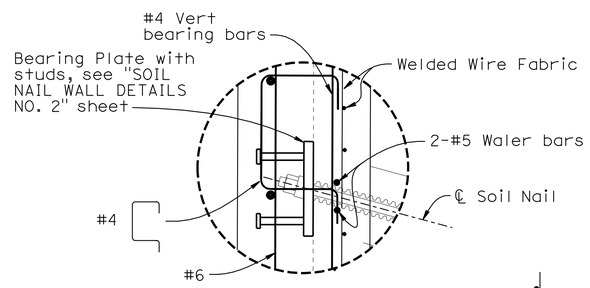

DETAIL A

1 1/2" = 1'-0"

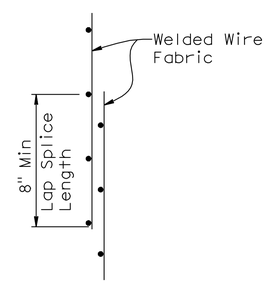

LAP SPLICE

DETAIL B

NO SCALE

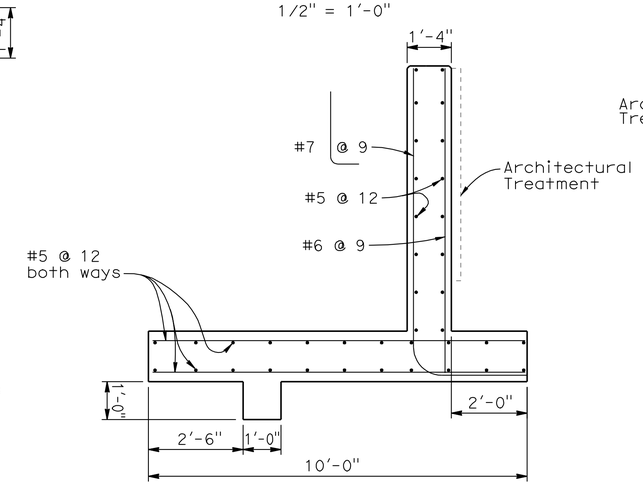

SECTION B-B

1/2" = 1'-0"

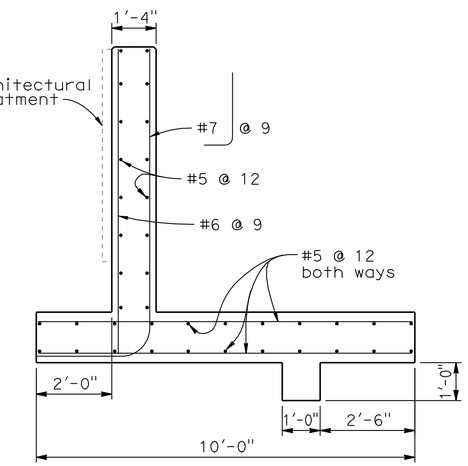

SECTION A-A

1/2" = 1'-0"

NOTES:

1. Bottom of wall to be placed against undisturbed material.
2. For Horizontal and Vertical Soil Nail spacing see "STRUCTURE PLAN NO. 1" through "STRUCTURE PLAN NO. 11" sheets.
3. For additional Soil Nail Details & Assemblies, see "SOIL NAIL WALL DETAILS NO. 2" sheet.
4. For Geocomposite Drain Details see "SOIL NAIL WALL DETAILS NO. 3" sheet.
5. For Architectural Treatment, see "ARCHITECTURAL TREATMENT DETAILS" sheet.
6. For soil nail rows that are discontinuous, extend waler bars a minimum of 5' beyond last soil nail.
7. For Section C-C, see "SOIL NAIL WALL DETAILS NO. 2" sheet.

	BY	CHECKED
DESIGN	M. Vo	C. Duan
DETAILS	G. Hallstrom	C. Duan
QUANTITIES	A. McPhee	F. Chen

STATE OF CALIFORNIA
DEPARTMENT OF TRANSPORTATION

DIVISION OF ENGINEERING SERVICES
STRUCTURE DESIGN
DESIGN BRANCH 10

BRIDGE NO. 54E0045
POST MILE 1.79

RETAINING WALL NO. 104
SOIL NAIL WALL DETAILS NO. 1

STRUCTURES DESIGN DETAIL SHEET (ENGLISH) (REV. 09-01-10)

ORIGINAL SCALE IN INCHES FOR REDUCED PLANS 0 1 2 3

UNIT: 3589
PROJECT NUMBER & PHASE: 08000005061
CONTRACT NO.: 08-0M9401

DISREGARD PRINTS BEARING EARLIER REVISION DATES

REVISION DATES: 11-10-11 12-14-11 1-09-12 3-12-12

SHEET 15 OF 27

FILE => 54e0045grwdt15.dgn

USERNAME => s121614 DATE PLOTTED => 18-APR-2012 TIME PLOTTED => 17:35

DIST	COUNTY	ROUTE	POST MILES TOTAL PROJECT	SHEET No.	TOTAL SHEETS
08	Riv,SBd	91,215	21.5/21.7, 43.2/45.2,0.0/5.1	1283	1743

REGISTERED CIVIL ENGINEER — DATE 4-06-12

4-16-12
PLANS APPROVAL DATE

REGISTERED PROFESSIONAL ENGINEER — LARRY WU — No. C57035 — Exp. 6-30-13 — CIVIL — STATE OF CALIFORNIA

The State of California or its officers or agents shall not be responsible for the accuracy or completeness of electronic copies of this plan sheet.

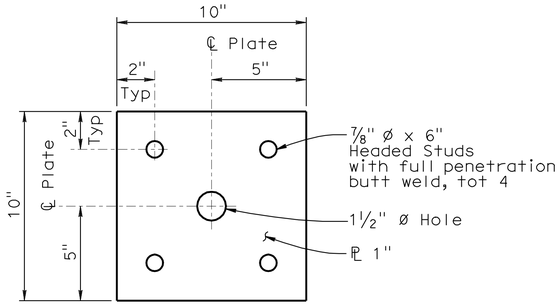

BEARING PLATE

3" = 1'-0"

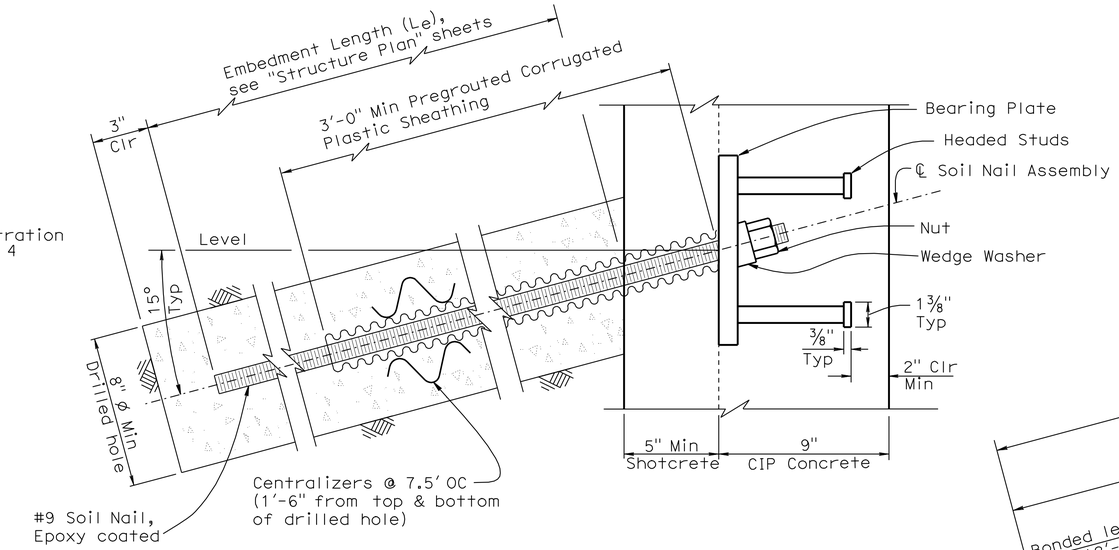

SOIL NAIL ASSEMBLY

3" = 1'-0"

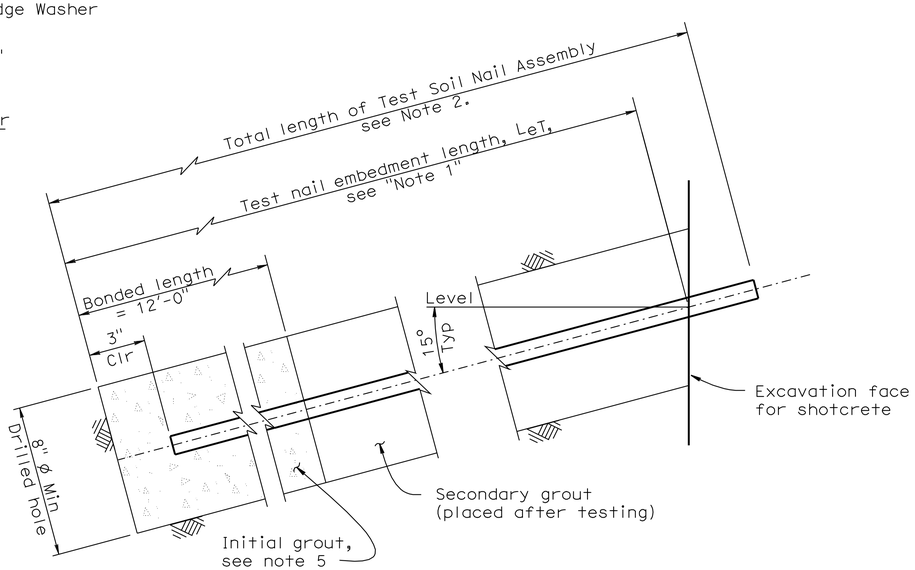

TEST SOIL NAIL ASSEMBLY

3" = 1'-0"

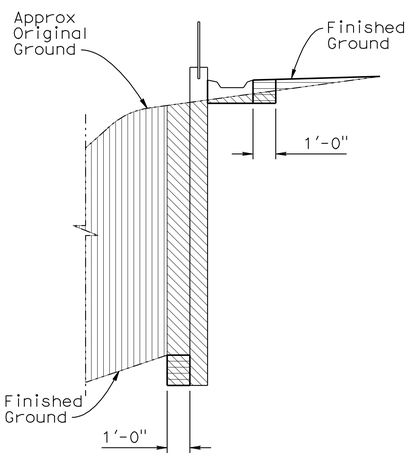

SOIL NAIL WALL EXCAVATION & BACKFILL

NO SCALE

Sta 103+75.00 to Sta 124+28.76

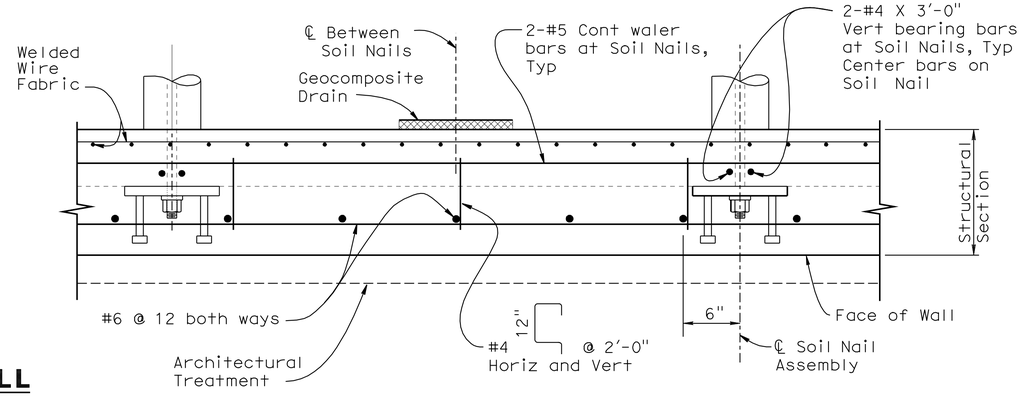

SECTION C-C

1 1/2" = 1'-0"

NOTES:

1. Embedment length L_{eT} of Test Nails equals two thirds of the embedment length L_e of adjacent soil nail assemblies, but not less than 12'-0".
2. Total length of Test Soil Nail equals embedment length plus the length required for jacking equipment.
3. For embedment length of Production Nails see "STRUCTURE PLAN NO. 1" through "STRUCTURE PLAN NO. 11" sheets.
4. Finished grout surface to be perpendicular to bar.
5. For location of Test Nails, see "STRUCTURE PLAN NO. 1" through "STRUCTURE PLAN NO. 11" sheets. Additional Test Nails will be installed and tested per special provisions.
6. For location of Section C-C, see "SOIL NAIL WALL DETAILS NO. 1" sheet.

LEGEND:

- Structure Excavation
- Structure Backfill
- Roadway Excavation (see Roadway Plan)
- Roadway Backfill (see Roadway Plan)

DESIGN	BY M. Vo	CHECKED C. Duan	
DETAILS	BY G. Hallstrom	CHECKED C. Duan	
QUANTITIES	BY A. McPhee	CHECKED F. Chen	

STATE OF CALIFORNIA
DEPARTMENT OF TRANSPORTATION

DIVISION OF ENGINEERING SERVICES
STRUCTURE DESIGN
DESIGN BRANCH 10

BRIDGE NO. 54E0045
POST MILE 1.79

RETAINING WALL NO. 104
SOIL NAIL WALL DETAILS NO. 2

STRUCTURES DESIGN DETAIL SHEET (ENGLISH) (REV. 09-01-10)

ORIGINAL SCALE IN INCHES FOR REDUCED PLANS 0 1 2 3

UNIT: 3589
PROJECT NUMBER & PHASE: 08000005061
CONTRACT NO.: 08-0M9401

DISREGARD PRINTS BEARING EARLIER REVISION DATES

REVISION DATES: 11-10-11 1-09-12 3-12-12

SHEET 16 OF 27

FILE => 54e0045grwdt16.dgn

USERNAME => s121614 DATE PLOTTED => 18-APR-2012 TIME PLOTTED => 17:35

DIST	COUNTY	ROUTE	POST MILES TOTAL PROJECT	SHEET No.	TOTAL SHEETS
08	Riv,SBd	91,215	21.5/21.7, 43.2/45.2,0.0/5.1	1284	1743

REGISTERED CIVIL ENGINEER — DATE 4-06-12

4-16-12
PLANS APPROVAL DATE

REGISTERED PROFESSIONAL ENGINEER — LARRY WU — No. C57035 — Exp. 6-30-13 — CIVIL — STATE OF CALIFORNIA

The State of California or its officers or agents shall not be responsible for the accuracy or completeness of electronic copies of this plan sheet.

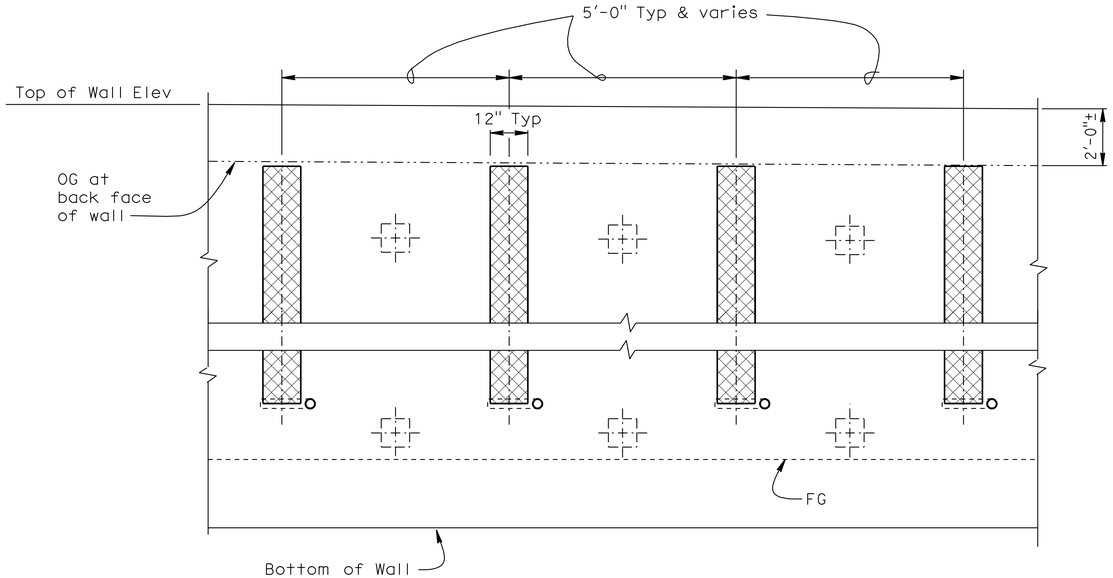

PART ELEVATION - GEOCOMPOSITE DRAIN

No scale

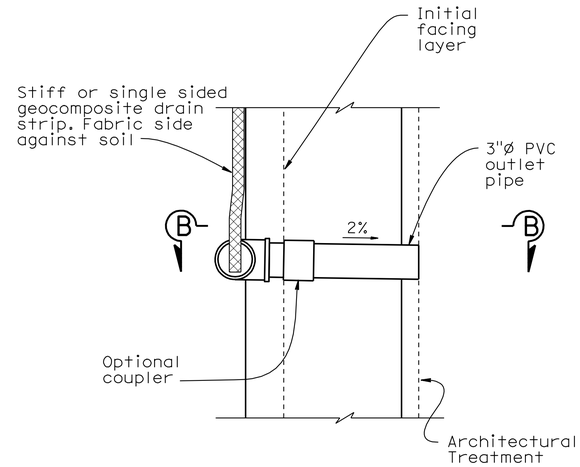

WALL DRAIN DETAIL AT WEEPHOLE

OPTION B

No scale

NOTES:

1. Center Geocomposite drain between Soil Nail assemblies.
2. - Indicates Soil Nail Assembly.
3. 3" dia drain pipe to be placed 3" above finished grade, Typ.
4. Adjust Geocomposite Drain to clear Test Soil Nails.

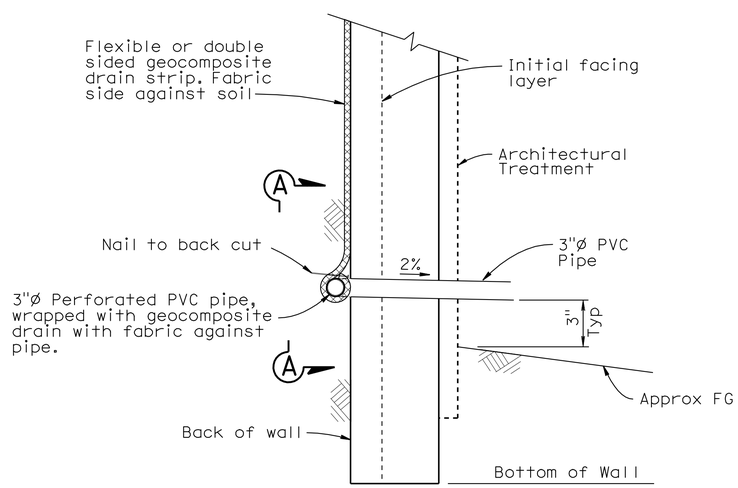

WALL DRAIN DETAIL AT WEEPHOLE

OPTION A

No scale

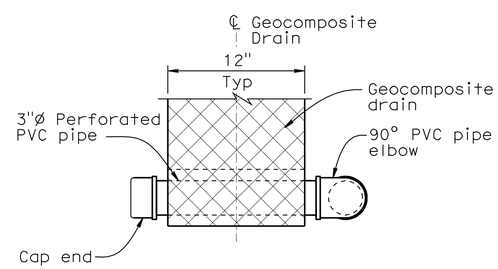

VIEW A-A

No scale

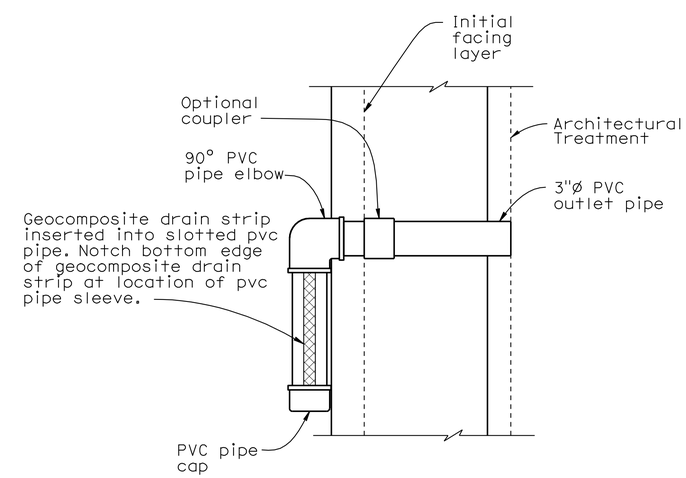

VIEW B-B

No Scale

DESIGN	BY M. Vo	CHECKED C. Duan	
DETAILS	BY G. Hallstrom	CHECKED C. Duan	
QUANTITIES	BY A. McPhee	CHECKED F. Chen	

STATE OF CALIFORNIA
DEPARTMENT OF TRANSPORTATION

DIVISION OF ENGINEERING SERVICES
STRUCTURE DESIGN
DESIGN BRANCH 10

BRIDGE NO. 54E0045
POST MILE 1.79

RETAINING WALL NO. 104

SOIL NAIL WALL DETAILS NO. 3

STRUCTURES DESIGN DETAIL SHEET (ENGLISH) (REV. 09-01-10)

ORIGINAL SCALE IN INCHES FOR REDUCED PLANS 0 1 2 3

UNIT: 3589
PROJECT NUMBER & PHASE: 08000005061
CONTRACT NO.: 08-0M9401

DISREGARD PRINTS BEARING EARLIER REVISION DATES

REVISION DATES: 11-10-11 1-09-12

SHEET 17 OF 27

FILE => 54e0045grwdt17.dgn

USERNAME => s121614 DATE PLOTTED => 18-APR-2012 TIME PLOTTED => 17:35

Dist	COUNTY	ROUTE	POST MILES TOTAL PROJECT	SHEET No.	TOTAL SHEETS
08	Riv,SBd	91,215	21.5/21.7, 43.2/45.2,0.0/5.1	1285	1743

LICENSED LANDSCAPE ARCHITECT

4-16-12
PLANS APPROVAL DATE

THE STATE OF CALIFORNIA OR ITS OFFICERS OR AGENTS SHALL NOT BE RESPONSIBLE FOR THE ACCURACY OR COMPLETENESS OF SCANNED COPIES OF THIS PLAN SHEET.

LICENSED LANDSCAPE ARCHITECT
RAY A. DESSELLE, No. 2555
Signature
11/30/13
Renewal Date
03/29/12
Date
STATE OF CALIFORNIA

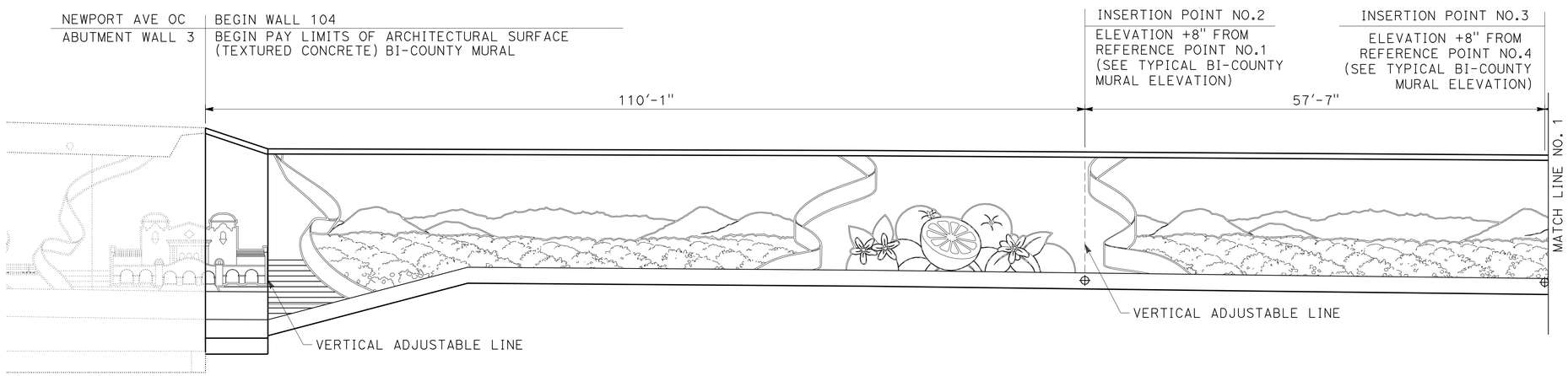

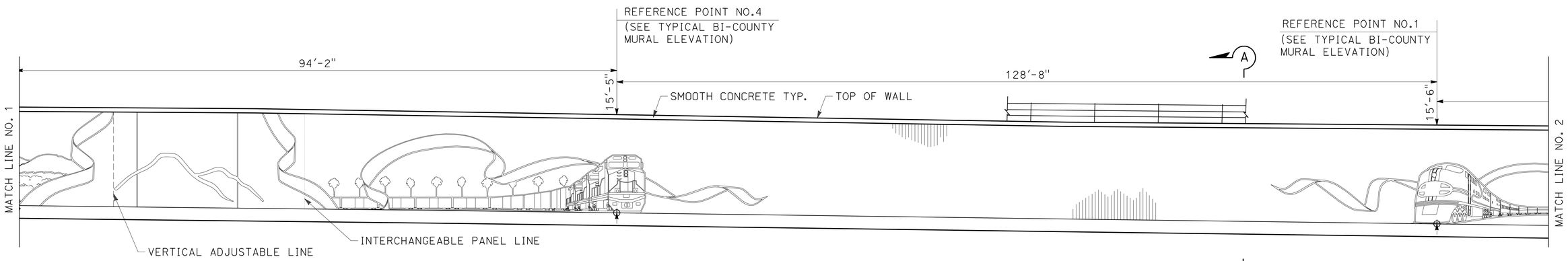

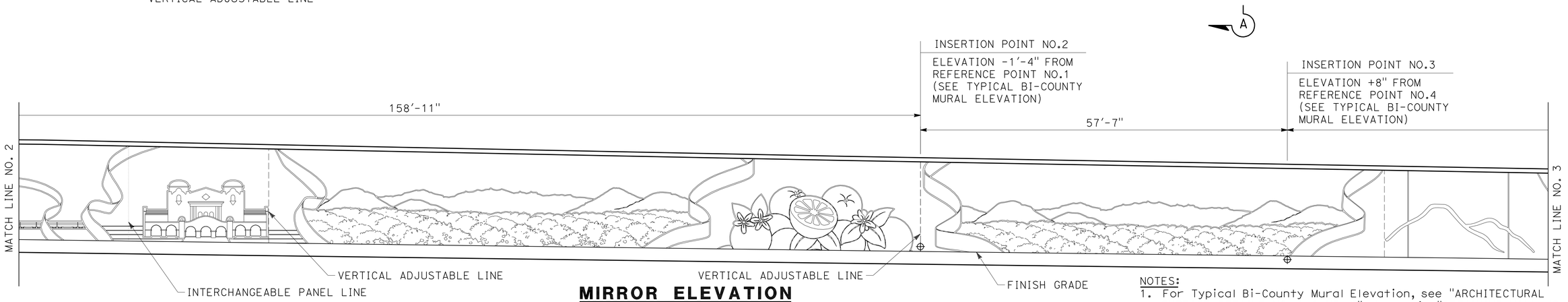

MIRROR ELEVATION

SCALE: 1/8"=1'-0"

THIS PLAN IS ACCURATE FOR ARCHITECTURAL TREATMENT WORK ONLY.

NOTES:
1. For Typical Bi-County Mural Elevation, see "ARCHITECTURAL SURFACE DETAILS NO. 1 & NO. 2" sheets in "RETAINING WALL NO. 40" Structure Plans.
2. For Section A-A, see "ARCHITECTURAL SURFACE DETAILS NO. 11" sheet in "RETAINING WALL NO. 40" Structure Plans.

	BY	CHECKED
DESIGN	M. Hall/B. Fleming/B. Strout	M. Bishop/I.Tasabia
DETAILS	M. Bishop	M. Hall
QUANTITIES	A. McPhee	F. Chen

STATE OF CALIFORNIA
DEPARTMENT OF TRANSPORTATION

DIVISION OF ENGINEERING SERVICES
STRUCTURE DESIGN
DESIGN BRANCH 10

BRIDGE NO. 54E0045
POST MILE 1.79

RETAINING WALL NO. 104
ARCHITECTURAL SURFACE LAYOUT NO. 1

STRUCTURES DESIGN DETAIL SHEET (ENGLISH) (REV. 09-01-10)

ORIGINAL SCALE IN INCHES FOR REDUCED PLANS 0 1 2 3

UNIT: 3589
PROJECT NUMBER & PHASE: 08000005061

DISREGARD PRINTS BEARING EARLIER REVISION DATES

REVISION DATES

SHEET 18 OF 27

FILE => 54e0045sas1o18.dgn

USERNAME => s121614 DATE PLOTTED => 18-APR-2012 TIME PLOTTED => 17:36

Dist	COUNTY	ROUTE	POST MILES TOTAL PROJECT	SHEET No.	TOTAL SHEETS
08	Riv,SBd	91,215	21.5/21.7, 43.2/45.2,0.0/5.1	1286	1743

LICENSED LANDSCAPE ARCHITECT

4-16-12
PLANS APPROVAL DATE

THE STATE OF CALIFORNIA OR ITS OFFICERS OR AGENTS SHALL NOT BE RESPONSIBLE FOR THE ACCURACY OR COMPLETENESS OF SCANNED COPIES OF THIS PLAN SHEET.

LICENSED LANDSCAPE ARCHITECT
RAY A. DESSELLE, No. 2506
Signature
11/30/13
Renewal Date
03/29/12
Date
STATE OF CALIFORNIA

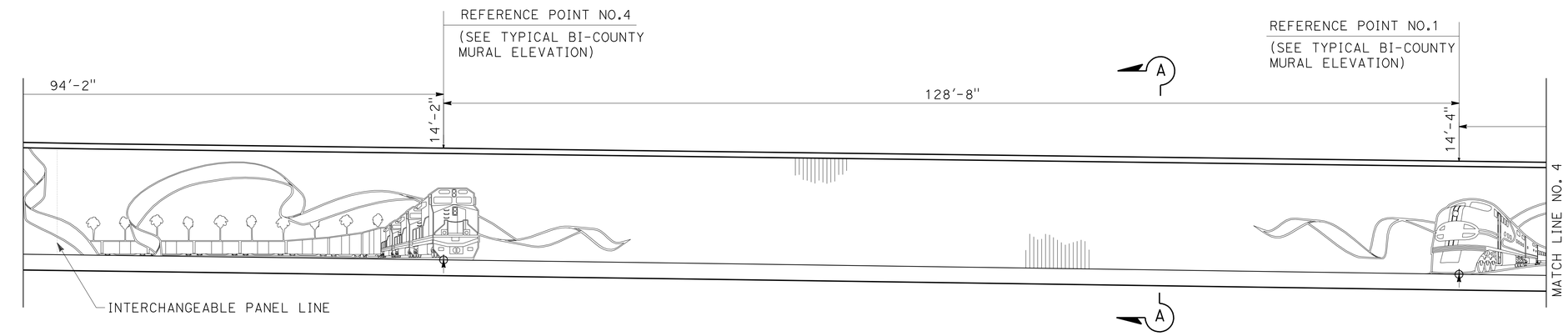

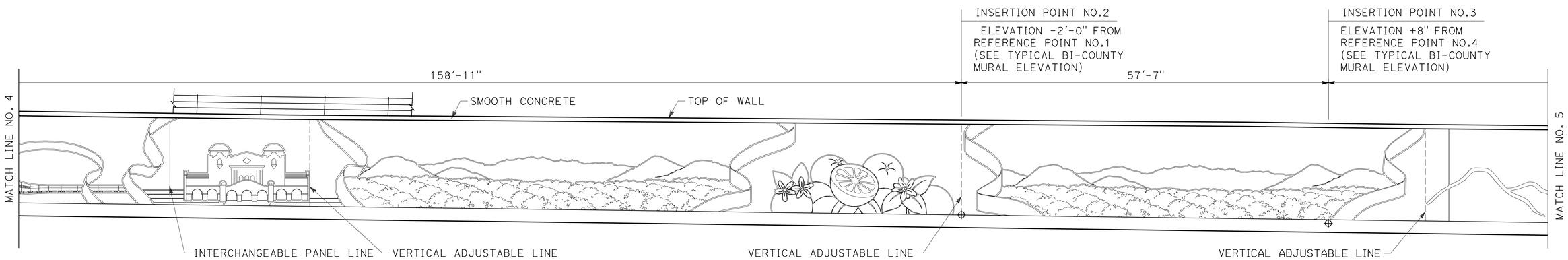

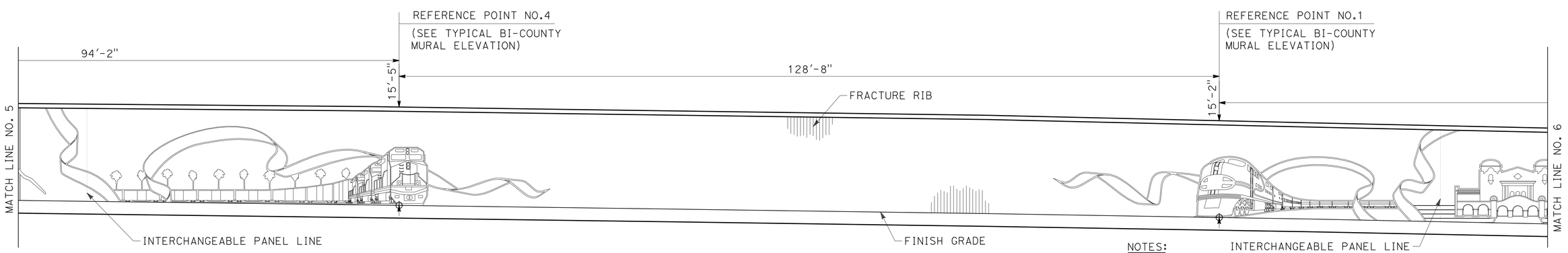

MIRROR ELEVATION

SCALE: 1/8"=1'-0"

THIS PLAN IS ACCURATE FOR ARCHITECTURAL TREATMENT WORK ONLY.

NOTES:

1. For Typical Bi-County Mural Elevation, see "ARCHITECTURAL SURFACE DETAILS NO. 1 & NO. 2" sheets in "RETAINING WALL NO. 40" Structure Plans.
2. For Section A-A, see "ARCHITECTURAL SURFACE DETAILS NO. 11" sheet in "RETAINING WALL NO. 40" Structure Plans.

	BY	CHECKED
DESIGN	M. Hall/B. Fleming/B. Strout	M. Bishop/I.Tasabia
DETAILS	M. Bishop	M. Hall
QUANTITIES	A. McPhee	F. Chen

STATE OF CALIFORNIA
DEPARTMENT OF TRANSPORTATION

DIVISION OF ENGINEERING SERVICES
STRUCTURE DESIGN
DESIGN BRANCH 10

BRIDGE NO. 54E0045
POST MILE 1.79

RETAINING WALL NO. 104
ARCHITECTURAL SURFACE LAYOUT NO. 2

STRUCTURES DESIGN DETAIL SHEET (ENGLISH) (REV. 09-01-10)

ORIGINAL SCALE IN INCHES FOR REDUCED PLANS 0 1 2 3

UNIT: 3589
PROJECT NUMBER & PHASE: 08000005061
CONTRACT NO.: 08-0M9401

DISREGARD PRINTS BEARING EARLIER REVISION DATES

REVISION DATES

SHEET 19 OF 27

FILE => 54e0045sas1o19.dgn

USERNAME => s121614 DATE PLOTTED => 18-APR-2012 TIME PLOTTED => 17:36

Dist	COUNTY	ROUTE	POST MILES TOTAL PROJECT	SHEET No.	TOTAL SHEETS
08	Riv,SBd	91,215	21.5/21.7, 43.2/45.2,0.0/5.1	1287	1743

LICENSED LANDSCAPE ARCHITECT

4-16-12
PLANS APPROVAL DATE

THE STATE OF CALIFORNIA OR ITS OFFICERS OR AGENTS SHALL NOT BE RESPONSIBLE FOR THE ACCURACY OR COMPLETENESS OF SCANNED COPIES OF THIS PLAN SHEET.

LICENSED LANDSCAPE ARCHITECT
RAY A. DESSELLE, No. 2446
Signature
11/30/13
Renewal Date
03/29/12
Date
STATE OF CALIFORNIA

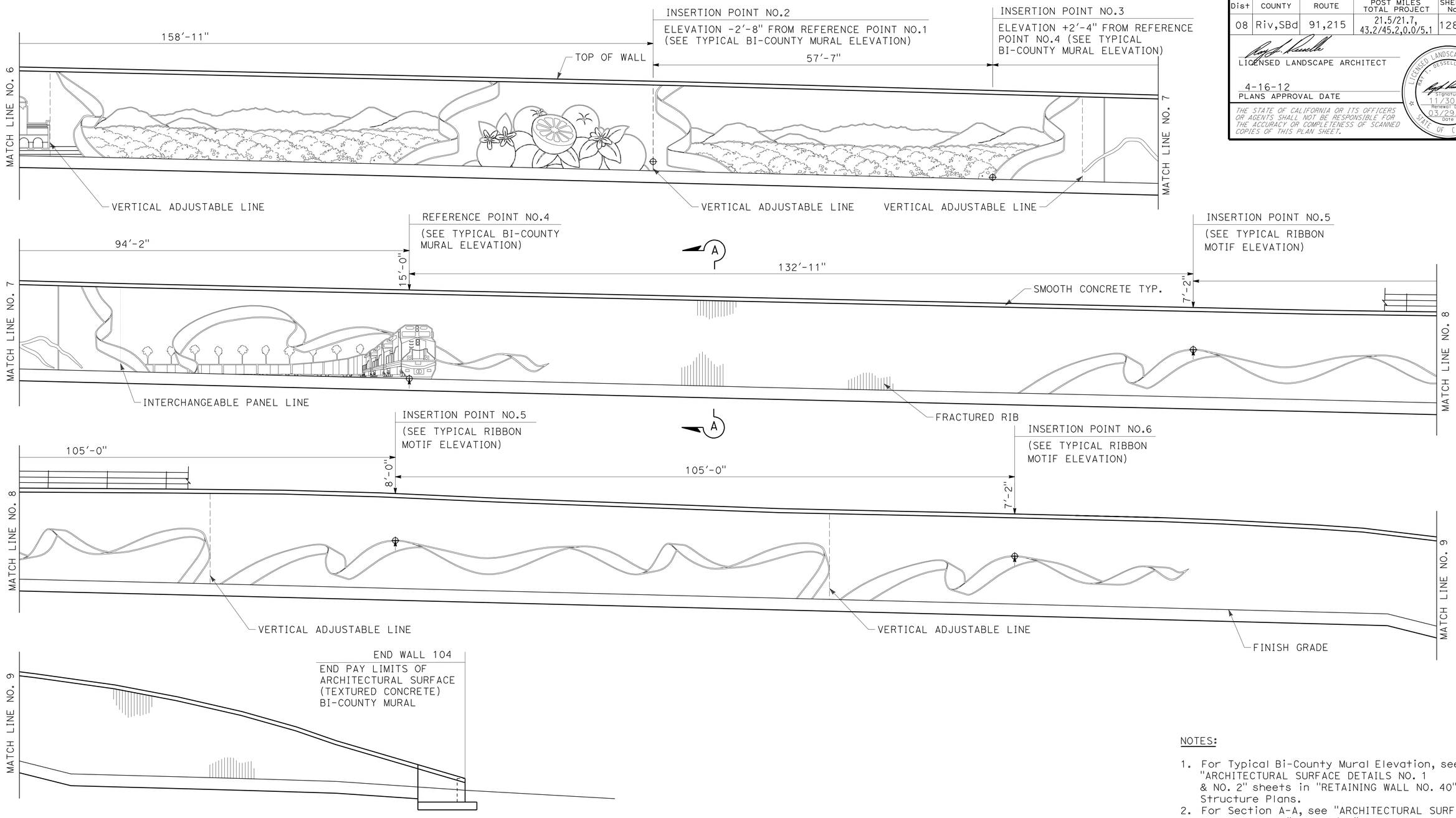

MIRROR ELEVATION

SCALE: 1/8"=1'-0"

THIS PLAN IS ACCURATE FOR ARCHITECTURAL TREATMENT WORK ONLY.

NOTES:

1. For Typical Bi-County Mural Elevation, see "ARCHITECTURAL SURFACE DETAILS NO. 1 & NO. 2" sheets in "RETAINING WALL NO. 40" Structure Plans.
2. For Section A-A, see "ARCHITECTURAL SURFACE DETAILS NO. 11" sheet in "RETAINING WALL NO. 40" Structure Plans.
3. For Typical Ribbon Motiff Elevation, see "ARCHITECTURAL SURFACE DETAILS NO. 3" sheet in "RETAINING WALL NO. 40" Structure Plans.

	BY	CHECKED
DESIGN	M. Hall/B. Fleming/B. Strout	M. Bishop/I.Tasabia
DETAILS	M. Bishop	M. Hall
QUANTITIES	A. McPhee	F. Chen

STATE OF CALIFORNIA
DEPARTMENT OF TRANSPORTATION

DIVISION OF ENGINEERING SERVICES
STRUCTURE DESIGN
DESIGN BRANCH 10

BRIDGE NO. 54E0045
POST MILE 1.79

RETAINING WALL NO. 104
ARCHITECTURAL SURFACE LAYOUT NO. 3

STRUCTURES DESIGN DETAIL SHEET (ENGLISH) (REV. 09-01-10)

ORIGINAL SCALE IN INCHES FOR REDUCED PLANS 0 1 2 3

UNIT: 3589
PROJECT NUMBER & PHASE: 08000005061

DISREGARD PRINTS BEARING EARLIER REVISION DATES

REVISION DATES

SHEET 20 OF 27

FILE => 54e0045sasla20.dgn

USERNAME => s121614 DATE PLOTTED => 18-APR-2012 TIME PLOTTED => 17:36

DIST	COUNTY	ROUTE	POST MILES TOTAL PROJECT	SHEET No.	TOTAL SHEETS
08	Riv,SBd	91,215	21.5/21.7, 43.2/45.2,0.0/5.1	1288	1743

CERTIFIED ENGINEERING GEOLOGIST — DATE 12-28-11

PROFESSIONAL GEOLOGIST — Chris Hoadley No. 2309 Exp. 11-23-13 CERTIFIED ENGINEERING GEOLOGIST — STATE OF CALIFORNIA

4-16-12
PLANS APPROVAL DATE

The State of California or its officers or agents shall not be responsible for the accuracy or completeness of electronic copies of this plan sheet.

This LOTB sheet was prepared in accordance with the Caltrans Soil & Rock Logging, Classification, & Presentation Manual (2010 Edition).

BENCH MARK

BM #3070 Elev 1029.10′
N 1,837,200.230
E 6,767,861.110
FD STD BR DISK STAMPED "SBd 215-1.78 1988"
IN SIDEWALK ON NEWPORT AVE BRIDGE.
NAVD 88

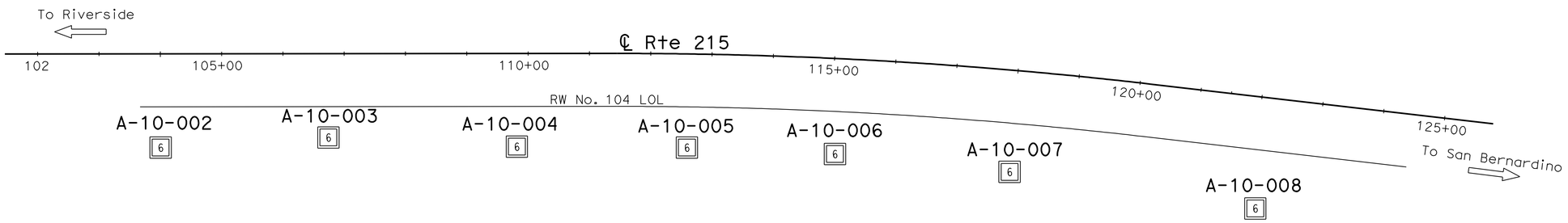

PLAN
1" = 100′

Note: No ground water encountered during field investigation.

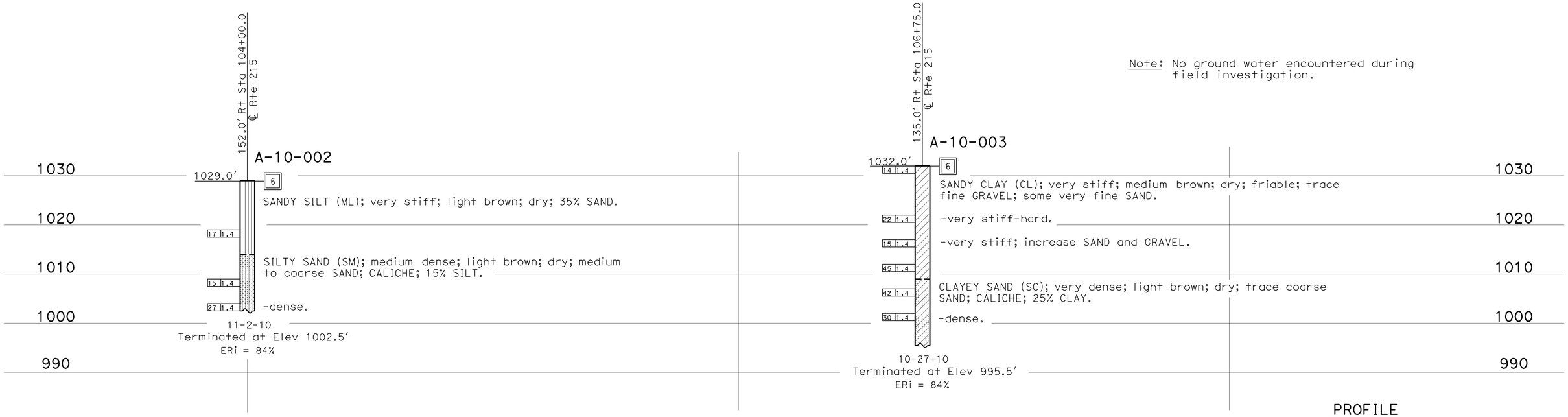

PROFILE
Horiz: 1" = 20′
Vert: 1" = 10′

ENGINEERING SERVICES	GEOTECHNICAL SERVICES	STATE OF CALIFORNIA DEPARTMENT OF TRANSPORTATION	DIVISION OF ENGINEERING SERVICES STRUCTURE DESIGN DESIGN BRANCH 10	BRIDGE NO. 54E0045 POST MILE 1.79	RETAINING WALL NO. 104 LOG OF TEST BORINGS 1 OF 7
FUNCTIONAL SUPERVISOR NAME: S. Wei	DRAWN BY: W. Tang 12/11 CHECKED BY: B. Gutierrez	FIELD INVESTIGATION BY: C. Hoadley			

OGS CIVIL LOG OF TEST BORINGS SHEET — ORIGINAL SCALE IN INCHES FOR REDUCED PLANS 0 1 2 3

UNIT: 3643
PROJECT NUMBER & PHASE: 08000005061 — CONTRACT NO.: 08-0M9401

DISREGARD PRINTS BEARING EARLIER REVISION DATES → 12-27-11

REVISION DATES — SHEET 21 OF 27

FILE => 54e0045z1tb21.dgn

USERNAME => s121614 — DATE PLOTTED => 18-APR-2012 — TIME PLOTTED => 17:36

DIST	COUNTY	ROUTE	POST MILES TOTAL PROJECT	SHEET No.	TOTAL SHEETS
08	Riv,SBd	91,215	21.5/21.7, 43.2/45.2,0.0/5.1	1289	1743

CERTIFIED ENGINEERING GEOLOGIST — DATE 12-28-11

4-16-12
PLANS APPROVAL DATE

PROFESSIONAL GEOLOGIST — Chris Hoadley No. 2309 Exp. 11-23-13 CERTIFIED ENGINEERING GEOLOGIST — STATE OF CALIFORNIA

The State of California or its officers or agents shall not be responsible for the accuracy or completeness of electronic copies of this plan sheet.

This LOTB sheet was prepared in accordance with the Caltrans Soil & Rock Logging, Classification, & Presentation Manual (2010 Edition).

FOR PLAN VIEW, SEE
"LOG OF TEST BORINGS 1 OF 7"

Note: No ground water encountered during field investigation.

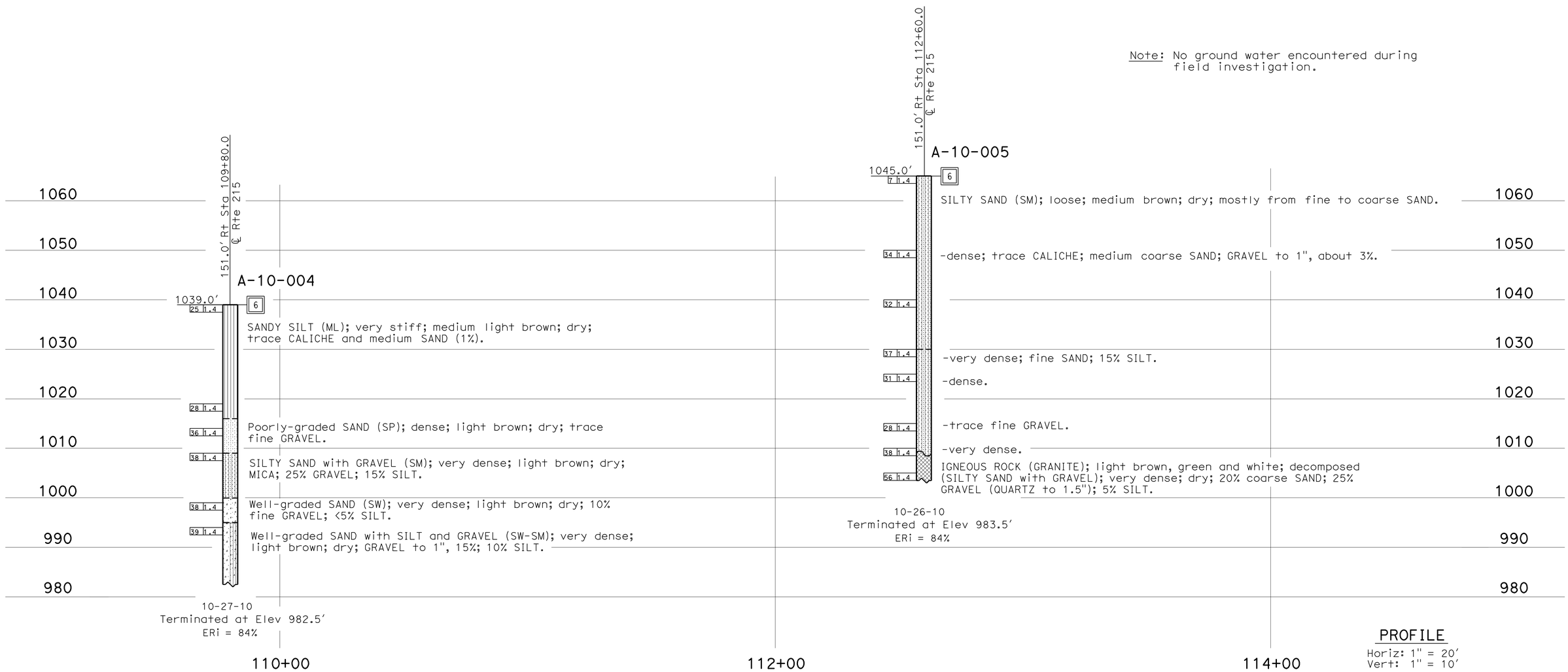

PROFILE
Horiz: 1" = 20'
Vert: 1" = 10'

ENGINEERING SERVICES	GEOTECHNICAL SERVICES	STATE OF CALIFORNIA DEPARTMENT OF TRANSPORTATION	DIVISION OF ENGINEERING SERVICES STRUCTURE DESIGN DESIGN BRANCH 10	BRIDGE NO. 54E0045 POST MILE 1.79	RETAINING WALL NO. 104 LOG OF TEST BORINGS 2 OF 7
FUNCTIONAL SUPERVISOR NAME: S. Wei	DRAWN BY: W. Tang 12/11 CHECKED BY: B. Gutierrez	FIELD INVESTIGATION BY: C. Hoadley			

OGS CIVIL LOG OF TEST BORINGS SHEET — ORIGINAL SCALE IN INCHES FOR REDUCED PLANS 0 1 2 3

UNIT: 3643
PROJECT NUMBER & PHASE: 08000005061 — CONTRACT NO.: 08-0M9401

DISREGARD PRINTS BEARING EARLIER REVISION DATES → 12-27-11

REVISION DATES				SHEET	OF
12-27-11				22	27

FILE => 54e0045zltb22.dgn

USERNAME => s126614 DATE PLOTTED => 18-APR-2012 TIME PLOTTED => 17:36

DIST	COUNTY	ROUTE	POST MILES TOTAL PROJECT	SHEET No.	TOTAL SHEETS
08	Riv,SBd	91,215	21.5/21.7, 43.2/45.2,0.0/5.1	1290	1743

CERTIFIED ENGINEERING GEOLOGIST — DATE 12-28-11

PROFESSIONAL GEOLOGIST — Chris Hoadley No. 2309 Exp. 11-23-13 CERTIFIED ENGINEERING GEOLOGIST — STATE OF CALIFORNIA

4-16-12
PLANS APPROVAL DATE

The State of California or its officers or agents shall not be responsible for the accuracy or completeness of electronic copies of this plan sheet.

This LOTB sheet was prepared in accordance with the Caltrans Soil & Rock Logging, Classification, & Presentation Manual (2010 Edition).

FOR PLAN VIEW, SEE
"LOG OF TEST BORINGS 1 OF 7"

Note: No ground water encountered during field investigation.

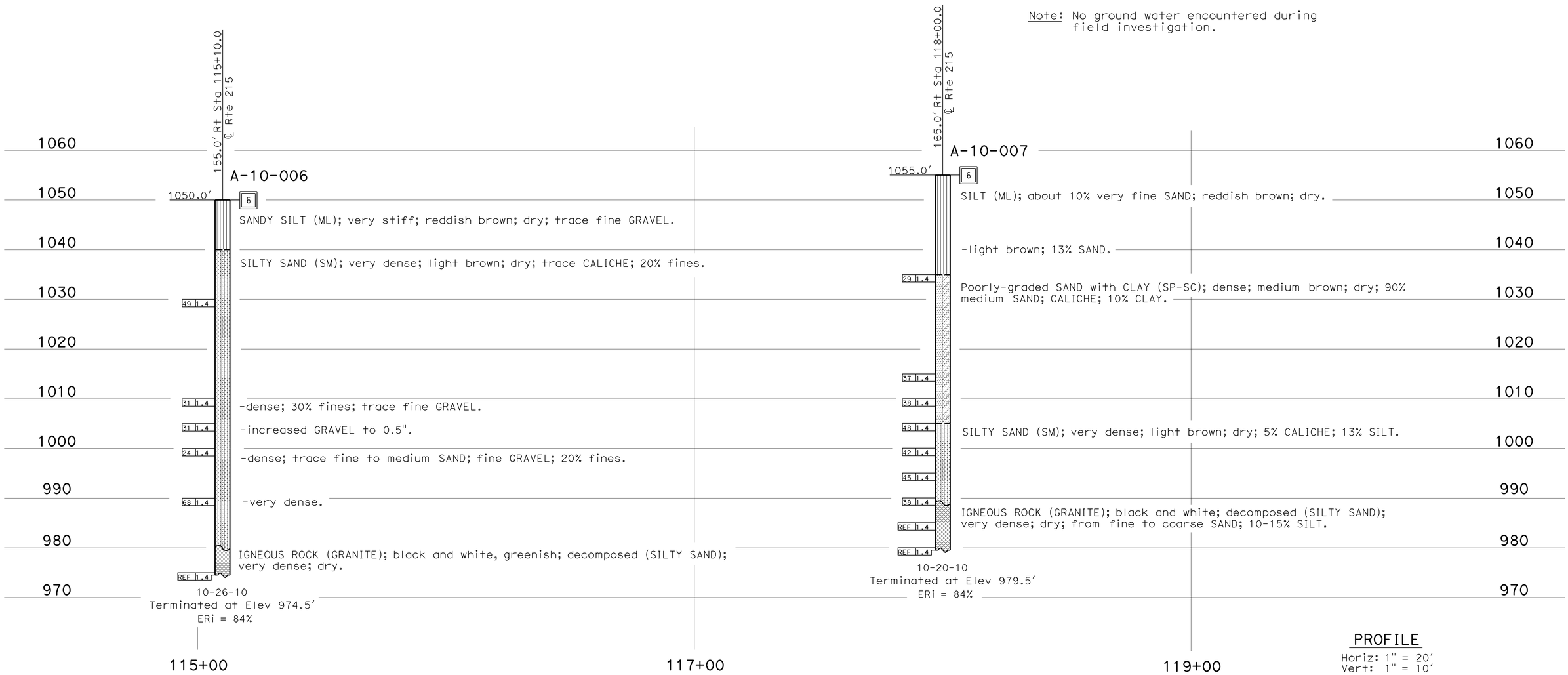

PROFILE
Horiz: 1" = 20′
Vert: 1" = 10′

ENGINEERING SERVICES	GEOTECHNICAL SERVICES	STATE OF CALIFORNIA DEPARTMENT OF TRANSPORTATION	DIVISION OF ENGINEERING SERVICES STRUCTURE DESIGN DESIGN BRANCH 10	BRIDGE NO. 54E0045 POST MILE 1.79	RETAINING WALL NO. 104
FUNCTIONAL SUPERVISOR NAME: S. Wei	DRAWN BY: W. Tang 12/11 CHECKED BY: B. Gutierrez	FIELD INVESTIGATION BY: C. Hoadley			LOG OF TEST BORINGS 3 OF 7

OGS CIVIL LOG OF TEST BORINGS SHEET

ORIGINAL SCALE IN INCHES FOR REDUCED PLANS 0 1 2 3

UNIT: 3643
PROJECT NUMBER & PHASE: 08000005061
CONTRACT NO.: 08-0M9401

DISREGARD PRINTS BEARING EARLIER REVISION DATES

REVISION DATES 12-27-11 — SHEET 23 OF 27

FILE => 54e0045zltb23.dgn

USERNAME => s612614 DATE PLOTTED => 18-APR-2012 TIME PLOTTED => 17:36

DIST	COUNTY	ROUTE	POST MILES TOTAL PROJECT	SHEET No.	TOTAL SHEETS
08	Riv,SBd	91,215	21.5/21.7, 43.2/45.2,0.0/5.1	1291	1743

CERTIFIED ENGINEERING GEOLOGIST — DATE 12-28-11

4-16-12
PLANS APPROVAL DATE

PROFESSIONAL GEOLOGIST — Chris Hoadley No. 2309 Exp. 11-23-13 CERTIFIED ENGINEERING GEOLOGIST — STATE OF CALIFORNIA

The State of California or its officers or agents shall not be responsible for the accuracy or completeness of electronic copies of this plan sheet.

This LOTB sheet was prepared in accordance with the Caltrans Soil & Rock Logging, Classification, & Presentation Manual (2010 Edition).

FOR PLAN VIEW, SEE
"LOG OF TEST BORINGS 1 OF 7"

Note: No ground water encountered during field investigation.

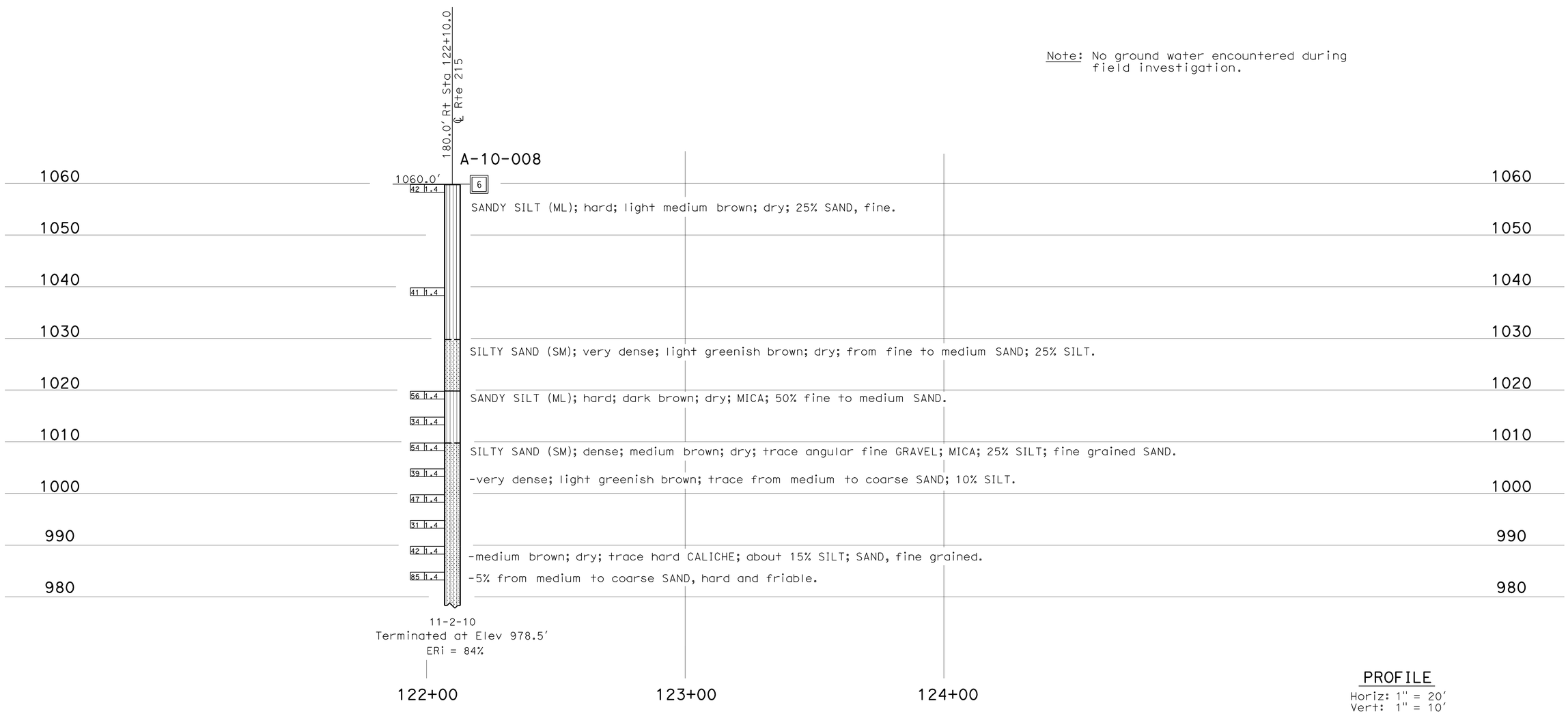

PROFILE
Horiz: 1" = 20'
Vert: 1" = 10'

ENGINEERING SERVICES		GEOTECHNICAL SERVICES	STATE OF CALIFORNIA DEPARTMENT OF TRANSPORTATION	DIVISION OF ENGINEERING SERVICES STRUCTURE DESIGN DESIGN BRANCH 10	BRIDGE NO. 54E0045 POST MILE 1.79	RETAINING WALL NO. 104 LOG OF TEST BORINGS 4 OF 7
FUNCTIONAL SUPERVISOR NAME: S. Wei	DRAWN BY: W. Tang 12/11 CHECKED BY: B. Gutierrez	FIELD INVESTIGATION BY: C. Hoadley				

OGS CIVIL LOG OF TEST BORINGS SHEET — ORIGINAL SCALE IN INCHES FOR REDUCED PLANS 0 1 2 3

UNIT: 3643
PROJECT NUMBER & PHASE: 08000005061 — CONTRACT NO.: 08-0M9401

DISREGARD PRINTS BEARING EARLIER REVISION DATES → REVISION DATES 12-27-11 — SHEET 24 OF 27

FILE => 54e0045zltb24.dgn

USERNAME => s121614 DATE PLOTTED => 18-APR-2012 TIME PLOTTED => 17:37

REFERENCE: CALTRANS SOIL & ROCK LOGGING, CLASSIFICATION, AND PRESENTATION MANUAL (2010)

DIST	COUNTY	ROUTE	POST MILES TOTAL PROJECT	SHEET No.	TOTAL SHEETS
08	Riv,SBd	91,215	21.5/21.7, 43.2/45.2,0.0/5.1	1292	1743

CERTIFIED ENGINEERING GEOLOGIST — DATE 12-28-11

4-16-12
PLANS APPROVAL DATE

PROFESSIONAL GEOLOGIST — Chris Hoadley No. 2309 Exp. 11-23-13 CERTIFIED ENGINEERING GEOLOGIST — STATE OF CALIFORNIA

The State of California or its officers or agents shall not be responsible for the accuracy or completeness of electronic copies of this plan sheet.

This LOTB sheet was prepared in accordance with the Caltrans Soil & Rock Logging, Classification, & Presentation Manual (2010 Edition).

CEMENTATION

Description	Criteria
Weak	Crumbles or breaks with handling or little finger pressure.
Moderate	Crumbles or breaks with considerable finger pressure.
Strong	Will not crumble or break with finger pressure.

BOREHOLE IDENTIFICATION

Symbol	Hole Type	Description
Size	A	Auger Boring (hollow or solid stem bucket)
Size	R RW RC P	Rotary drilled boring (conventional) Rotary drilled with self-casing wire-line Rotary core with continuously-sampled, self-casing wire-line Rotary percussion boring (air)
Size	R RC	Rotary drilled diamond core Rotary drilled rock core
Size	HD HA	Hand driven (1-inch soil tube) Hand Auger
●	D	Dynamic Cone Penetration Boring
▲	CPT	Cone Penetration Test (ASTM D 5778)
⬚	O	Other (note on LOTB)

Note: Size in inches.

CONSISTENCY OF COHESIVE SOILS

Description	Shear Strength (tsf)	Pocket Penetrometer Measurement, PP, (tsf)	Torvane Measurement, TV, (tsf)	Vane Shear Measurement, VS, (tsf)
Very Soft	Less than 0.12	Less than 0.25	Less than 0.12	Less than 0.12
Soft	0.12 - 0.25	0.25 - 0.5	0.12 - 0.25	0.12 - 0.25
Medium Stiff	0.25 - 0.5	0.5 - 1	0.25 - 0.5	0.25 - 0.5
Stiff	0.5 - 1	1 - 2	0.5 - 1	0.5 - 1
Very Stiff	1 - 2	2 - 4	1 - 2	1 - 2
Hard	Greater than 2	Greater than 4	Greater than 2	Greater than 2

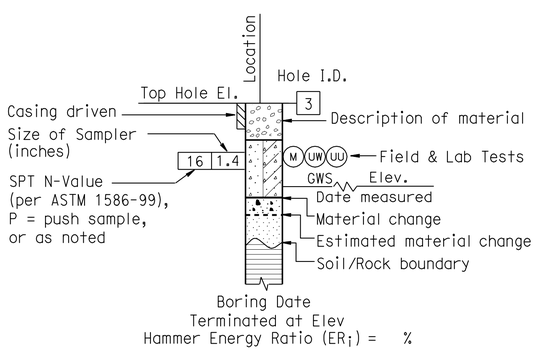

ROTARY BORING

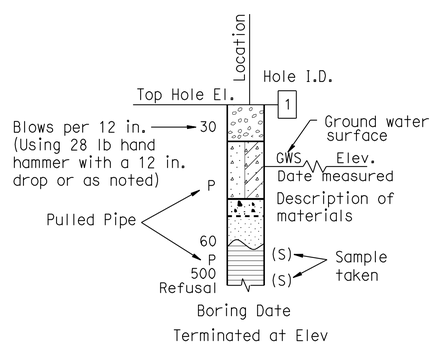

HAND BORING

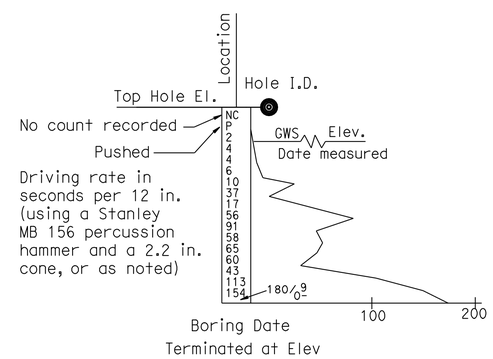

DYNAMIC CONE PENETRATION BORING

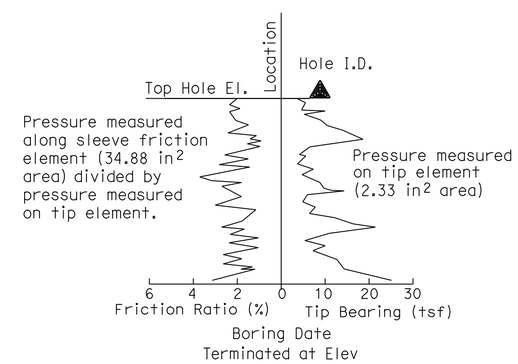

CONE PENETRATION TEST (CPT) BORING

ENGINEERING SERVICES	MATERIALS AND GEOTECHNICAL SERVICES	STATE OF CALIFORNIA DEPARTMENT OF TRANSPORTATION	DIVISION OF ENGINEERING SERVICES STRUCTURE DESIGN DESIGN BRANCH 10	BRIDGE NO. 54E0045 / POST MILE 1.79	RETAINING WALL NO. 104 LOG OF TEST BORINGS 5 OF 7
	PREPARED BY: W. Tang				

GS LOTB SOIL LEGEND

ORIGINAL SCALE IN INCHES FOR REDUCED PLANS 0 1 2 3

UNIT: 3643
PROJECT NUMBER & PHASE: 08000005061 CONTRACT NO.: 08-0M9401

DISREGARD PRINTS BEARING EARLIER REVISION DATES → 12-27-11

REVISION DATES | SHEET 25 OF 27

FILE => 54e0045zltb25.dgn

USERNAME => s121614 DATE PLOTTED => 18-APR-2012 TIME PLOTTED => 17:37

REFERENCE: CALTRANS SOIL & ROCK LOGGING, CLASSIFICATION, AND PRESENTATION MANUAL (2010)

DIST	COUNTY	ROUTE	POST MILES TOTAL PROJECT	SHEET No.	TOTAL SHEETS
08	Riv,SBd	91,215	21.5/21.7, 43.2/45.2,0.0/5.1	1293	1743

CERTIFIED ENGINEERING GEOLOGIST — 12-28-11 DATE

4-16-12
PLANS APPROVAL DATE

PROFESSIONAL GEOLOGIST — Chris Hoadley No. 2309 Exp. 11-23-13 CERTIFIED ENGINEERING GEOLOGIST — STATE OF CALIFORNIA

The State of California or its officers or agents shall not be responsible for the accuracy or completeness of electronic copies of this plan sheet.

GROUP SYMBOLS AND NAMES

Graphic/Symbol	Group Names	Graphic/Symbol	Group Names
GW	Well-graded GRAVEL Well-graded GRAVEL with SAND	CL	Lean CLAY Lean CLAY with SAND Lean CLAY with GRAVEL SANDY lean CLAY SANDY lean CLAY with GRAVEL GRAVELLY lean CLAY GRAVELLY lean CLAY with SAND
GP	Poorly-graded GRAVEL Poorly-graded GRAVEL with SAND		
GW-GM	Well-graded GRAVEL with SILT Well-graded GRAVEL with SILT and SAND	CL-ML	SILTY CLAY SILTY CLAY with SAND SILTY CLAY with GRAVEL SANDY SILTY CLAY SANDY SILTY CLAY with GRAVEL GRAVELLY SILTY CLAY GRAVELLY SILTY CLAY with SAND
GW-GC	Well-graded GRAVEL with CLAY (or SILTY CLAY) Well-graded GRAVEL with CLAY and SAND (or SILTY CLAY and SAND)		
GP-GM	Poorly-graded GRAVEL with SILT Poorly-graded GRAVEL with SILT and SAND	ML	SILT SILT with SAND SILT with GRAVEL SANDY SILT SANDY SILT with GRAVEL GRAVELLY SILT GRAVELLY SILT with SAND
GP-GC	Poorly-graded GRAVEL with CLAY (or SILTY CLAY) Poorly-graded GRAVEL with CLAY and SAND (or SILTY CLAY and SAND)		
GM	SILTY GRAVEL SILTY GRAVEL with SAND	OL	ORGANIC lean CLAY ORGANIC lean CLAY with SAND ORGANIC lean CLAY with GRAVEL SANDY ORGANIC lean CLAY SANDY ORGANIC lean CLAY with GRAVEL GRAVELLY ORGANIC lean CLAY GRAVELLY ORGANIC lean CLAY with SAND
GC	CLAYEY GRAVEL CLAYEY GRAVEL with SAND		
GC-GM	SILTY, CLAYEY GRAVEL SILTY, CLAYEY GRAVEL with SAND	OL	ORGANIC SILT ORGANIC SILT with SAND ORGANIC SILT with GRAVEL SANDY ORGANIC SILT SANDY ORGANIC SILT with GRAVEL GRAVELLY ORGANIC SILT GRAVELLY ORGANIC SILT with SAND
SW	Well-graded SAND Well-graded SAND with GRAVEL		
SP	Poorly-graded SAND Poorly-graded SAND with GRAVEL	CH	Fat CLAY Fat CLAY with SAND Fat CLAY with GRAVEL SANDY fat CLAY SANDY fat CLAY with GRAVEL GRAVELLY fat CLAY GRAVELLY fat CLAY with SAND
SW-SM	Well-graded SAND with SILT Well-graded SAND with SILT and GRAVEL		
SW-SC	Well-graded SAND with CLAY (or SILTY CLAY) Well-graded SAND with CLAY and GRAVEL (or SILTY CLAY and GRAVEL)	MH	Elastic SILT Elastic SILT with SAND Elastic SILT with GRAVEL SANDY elastic SILT SANDY elastic SILT with GRAVEL GRAVELLY elastic SILT GRAVELLY elastic SILT with SAND
SP-SM	Poorly-graded SAND with SILT Poorly-graded SAND with SILT and GRAVEL		
SP-SC	Poorly-graded SAND with CLAY (or SILTY CLAY) Poorly-graded SAND with CLAY and GRAVEL (or SILTY CLAY and GRAVEL)	OH	ORGANIC fat CLAY ORGANIC fat CLAY with SAND ORGANIC fat CLAY with GRAVEL SANDY ORGANIC fat CLAY SANDY ORGANIC fat CLAY with GRAVEL GRAVELLY ORGANIC fat CLAY GRAVELLY ORGANIC fat CLAY with SAND
SM	SILTY SAND SILTY SAND with GRAVEL		
SC	CLAYEY SAND CLAYEY SAND with GRAVEL	OH	ORGANIC elastic SILT ORGANIC elastic SILT with SAND ORGANIC elastic SILT with GRAVEL SANDY ORGANIC elastic SILT SANDY ORGANIC elastic SILT with GRAVEL GRAVELLY ORGANIC elastic SILT GRAVELLY ORGANIC elastic SILT with SAND
SC-SM	SILTY, CLAYEY SAND SILTY, CLAYEY SAND with GRAVEL		
PT	PEAT	OL/OH	ORGANIC SOIL ORGANIC SOIL with SAND ORGANIC SOIL with GRAVEL SANDY ORGANIC SOIL SANDY ORGANIC SOIL with GRAVEL GRAVELLY ORGANIC SOIL GRAVELLY ORGANIC SOIL with SAND
	COBBLES COBBLES and BOULDERS BOULDERS		

FIELD AND LABORATORY TESTING

- (C) Consolidation (ASTM D 2435)
- (CL) Collapse Potential (ASTM D 5333)
- (CP) Compaction Curve (CTM 216)
- (CR) Corrosivity Testing (CTM 643, CTM 422, CTM 417)
- (CU) Consolidated Undrained Triaxial (ASTM D 4767)
- (DS) Direct Shear (ASTM D 3080)
- (EI) Expansion Index (ASTM D 4829)
- (M) Moisture Content (ASTM D 2216)
- (OC) Organic Content-% (ASTM D 2974)
- (P) Permeability (CTM 220)
- (PA) Particle Size Analysis (ASTM D 422)
- (PI) Plasticity Index (AASHTO T 90) Liquid Limit (AASHTO T 89)
- (PL) Point Load Index (ASTM D 5731)
- (PM) Pressure Meter
- (R) R-Value (CTM 301)
- (SE) Sand Equivalent (CTM 217)
- (SG) Specific Gravity (AASHTO T 100)
- (SL) Shrinkage Limit (ASTM D 427)
- (SW) Swell Potential (ASTM D 4546)
- (UC) Unconfined Compression-Soil (ASTM D 2166) Unconfined Compression-Rock (ASTM D 2938)
- (UU) Unconsolidated Undrained Triaxial (ASTM D 2850)
- (UW) Unit Weight (ASTM D 4767)

APPARENT DENSITY OF COHESIONLESS SOILS

Description	SPT N_{60} (Blows / 12 in.)
Very Loose	0 - 5
Loose	5 - 10
Medium Dense	10 - 30
Dense	30 - 50
Very Dense	Greater than 50

MOISTURE

Description	Criteria
Dry	No discernable moisture
Moist	Moisture present, but no free water
Wet	Visible free water

PERCENT OR PROPORTION OF SOILS

Description	Criteria
Trace	Particles are present but estimated to be less than 5%
Few	5% - 10%
Little	15% - 25%
Some	30% - 45%
Mostly	50% - 100%

PARTICLE SIZE

Description		Size (in.)
Boulder		Greater than 12
Cobble		3 - 12
Gravel	Coarse	3/4 - 3
	Fine	1/5 - 3/4
Sand	Coarse	1/16 - 1/5
	Medium	1/64 - 1/16
	Fine	1/300 - 1/64
Silt and Clay		Less than 1/300

ENGINEERING SERVICES

MATERIALS AND GEOTECHNICAL SERVICES
PREPARED BY: W. Tang

STATE OF CALIFORNIA
DEPARTMENT OF TRANSPORTATION

DIVISION OF ENGINEERING SERVICES
STRUCTURE DESIGN
DESIGN BRANCH 10

BRIDGE NO. 54E0045
POST MILE 1.79

RETAINING WALL NO. 104
LOG OF TEST BORINGS 6 OF 7

GS LOTB SOIL LEGEND

ORIGINAL SCALE IN INCHES FOR REDUCED PLANS 0 1 2 3

UNIT: 3643
PROJECT NUMBER & PHASE: 08000005061
CONTRACT NO.: 08-0M9401

DISREGARD PRINTS BEARING EARLIER REVISION DATES

REVISION DATES 12-27-11 | SHEET 26 | OF 27

FILE => 54e0045zltb26.dgn

USERNAME => s121614 DATE PLOTTED => 18-APR-2012 TIME PLOTTED => 17:37

REFERENCE: CALTRANS SOIL & ROCK LOGGING, CLASSIFICATION, AND PRESENTATION MANUAL (2010)

DIST	COUNTY	ROUTE	POST MILES TOTAL PROJECT	SHEET No.	TOTAL SHEETS
08	Riv,SBd	91,215	21.5/21.7, 43.2/45.2,0.0/5.1	1294	1743

CERTIFIED ENGINEERING GEOLOGIST 12-28-11 DATE

4-16-12
PLANS APPROVAL DATE

PROFESSIONAL GEOLOGIST Chris Hoadley No. 2309 Exp. 11-23-13 CERTIFIED ENGINEERING GEOLOGIST STATE OF CALIFORNIA

The State of California or its officers or agents shall not be responsible for the accuracy or completeness of electronic copies of this plan sheet.

This LOTB sheet was prepared in accordance with the Caltrans Soil & Rock Logging, Classification, & Presentation Manual (2010 Edition).

PERCENT CORE RECOVERY (REC) & ROCK QUALITY DESIGNATION (RQD)

$$REC = \frac{\sum \text{Length of the recovered core pieces (in.)}}{\text{Total length of core run (in.)}} \times 100\%$$

$$RQD = \frac{\sum \text{Length of intact core pieces} \geq 4 \text{ in.}}{\text{Total length of core run (in.)}} \times 100\%$$

RQD* Indicates soundness criteria not met.

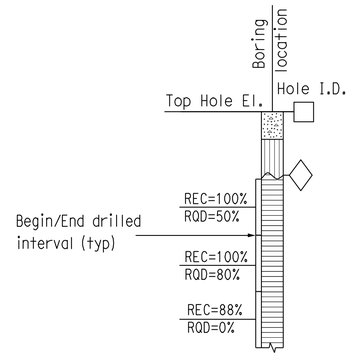

BEDDING SPACING

Description	Thickness / Spacing
Massive	Greater than 10 ft
Very Thickly Bedded	3 ft - 10 ft
Thickly Bedded	1 ft - 3 ft
Moderately Bedded	4 in. - 1 ft
Thinly Bedded	1 in. - 4 in.
Very Thinly Bedded	1/4 in. - 1 in.
Laminated	Less than 1/4 in.

LEGEND OF ROCK MATERIALS

- IGNEOUS ROCK
- SEDIMENTARY ROCK
- METAMORPHIC ROCK

ROCK HARDNESS

Description	Criteria
Extremely Hard	Cannot be scratched with a pocketknife or sharp pick. Can only be chipped with repeated heavy hammer blows.
Very Hard	Cannot be scratched with a pocketknife or sharp pick. Breaks with repeated heavy hammer blows.
Hard	Can be scratched with a pocketknife or sharp pick with difficulty (heavy pressure). Breaks with heavy hammer blows.
Moderately Hard	Can be scratched with pocketknife or sharp pick with light or moderate pressure. Breaks with moderate hammer blows.
Moderately Soft	Can be grooved 1/16 in. deep with a pocketknife or sharp pick with moderate or heavy pressure. Breaks with light hammer blow or heavy manual pressure.
Soft	Can be grooved or gouged easily by a pocketknife or sharp pick with light pressure, can be scratched with fingernail. Breaks with light to moderate manual pressure.
Very Soft	Can be readily indented, grooved or gouged with fingernail, or carved with a pocketknife. Breaks with light manual pressure.

FRACTURE DENSITY

Description	Observed Fracture Density
Unfractured	No fractures.
Very Slightly Fractured	Core lengths greater than 3 ft.
Slightly Fractured	Core lengths mostly from 1 to 3 ft.
Moderately Fractured	Core lengths mostly from 4 in. to 1 ft.
Intensely Fractured	Core lengths mostly from 1 to 4 in.
Very Intensely Fractured	Mostly chips and fragments.

WEATHERING DESCRIPTORS FOR INTACT ROCK

Description	Diagnostic Features					General Characteristics
	Chemical Weathering-Discoloration and/or Oxidation		Mechanical Weathering-Grain Boundary Conditions (Disaggregation) Primarily for Granitics and Some Coarse-Grained Sediments	Texture and Leaching		
	Body of Rock	Fracture Surfaces		Texture	Leaching	
Fresh	No discoloration, not oxidized.	No discoloration or oxidation.	No separation, intact (tight).	No change	No leaching	Hammer rings when crystalline rocks are struck.
Slightly Weathered	Discoloration or oxidation is limited to surface of, or short distance from, fractures; some feldspar crystals are dull.	Minor to complete discoloration or oxidation of most surfaces.	No visible separation, intact (tight).	Preserved	Minor leaching of some soluble minerals.	Hammer rings when crystalline rocks are struck. Body of rock not weakened.
Moderately Weathered	Discoloration or oxidation extends from fractures usually throughout; Fe-Mg minerals are "rusty," feldspar crystals are "cloudy."	All fracture surfaces are discolored or oxidized.	Partial separation of boundaries visible.	Generally preserved	Soluble minerals may be mostly leached.	Hammer does not ring when rock is struck. Body of rock is slightly weakened.
Intensely Weathered	Discoloration or oxidation throughout; all feldspars and Fe-Mg minerals are altered to clay to some extent; or chemical alteration produces in-situ disaggregation, see grain boundary conditions.	All fracture surfaces are discolored or oxidized, surfaces friable.	Partial separation, rock is friable; in semiarid conditions granitics are disaggregated.	Texture altered by chemical disintegration (hydration, argillation).	Leaching of soluble minerals may be complete.	Dull sound when struck with hammer, usually can be broken with moderate to heavy manual pressure or by light hammer blow without reference to planes of weakness such as incipient or hairline fractures, or veinlets. Rock is significantly weakened.
Decomposed	Discolored or oxidized throughout, but resistant minerals such as quartz may be unaltered; all feldspars and Fe-Mg minerals are completely altered to clay.		Complete separation of grain boundaries (disaggregated).	Resembles a soil, partial or complete remnant rock structure may be preserved; leaching of soluble minerals usually complete.		Can be granulated by hand. Resistant minerals such as quartz may be present as "stringers" or "dikes."

ENGINEERING SERVICES

MATERIALS AND GEOTECHNICAL SERVICES

PREPARED BY: W. Tang

STATE OF CALIFORNIA DEPARTMENT OF TRANSPORTATION

DIVISION OF ENGINEERING SERVICES STRUCTURE DESIGN DESIGN BRANCH 10

BRIDGE NO. 54E0045

POST MILE 1.79

RETAINING WALL NO. 104

LOG OF TEST BORINGS 7 OF 7

GS LOTB SOIL LEGEND

ORIGINAL SCALE IN INCHES FOR REDUCED PLANS 0 1 2 3

UNIT: 3643
PROJECT NUMBER & PHASE: 08000005061 CONTRACT NO.: 08-0M9401

DISREGARD PRINTS BEARING EARLIER REVISION DATES

REVISION DATES 12-27-11

SHEET 27 OF 27

FILE => 54e0045zltb27.dgn

USERNAME => s12616 DATE PLOTTED => 18-APR-2012 TIME PLOTTED => 17:37

DIST	COUNTY	ROUTE	POST MILES TOTAL PROJECT	SHEET No.	TOTAL SHEETS
08	Riv,SBd	91,215	21.5/21.7, 43.2/45.2,0.0/5.1	1295	1743

REGISTERED CIVIL ENGINEER 1-2-12 DATE

4-16-12
PLANS APPROVAL DATE

REGISTERED PROFESSIONAL ENGINEER JUSTINE NIU No. C62897 Exp. 6-30-12 CIVIL STATE OF CALIFORNIA

The State of California or its officers or agents shall not be responsible for the accuracy or completeness of electronic copies of this plan sheet.

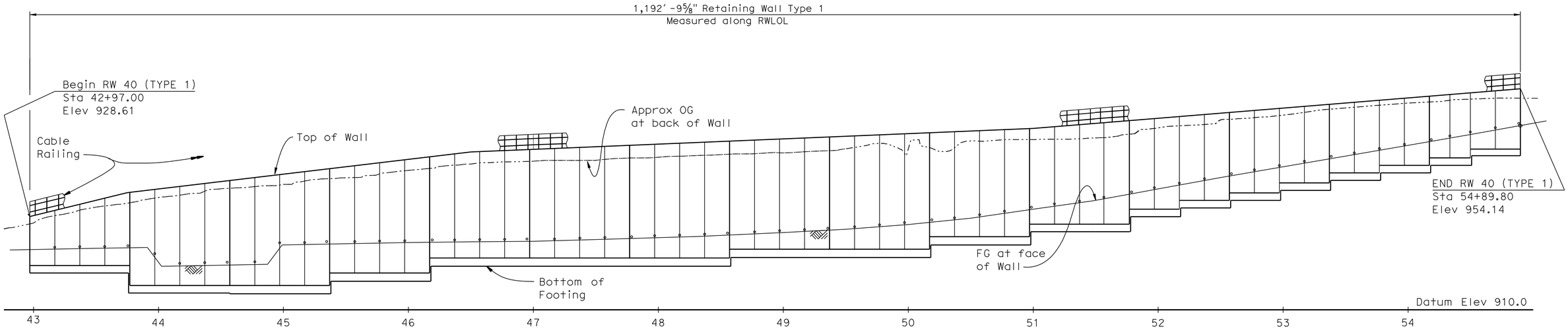

MIRRORED DEVELOPED ELEVATION

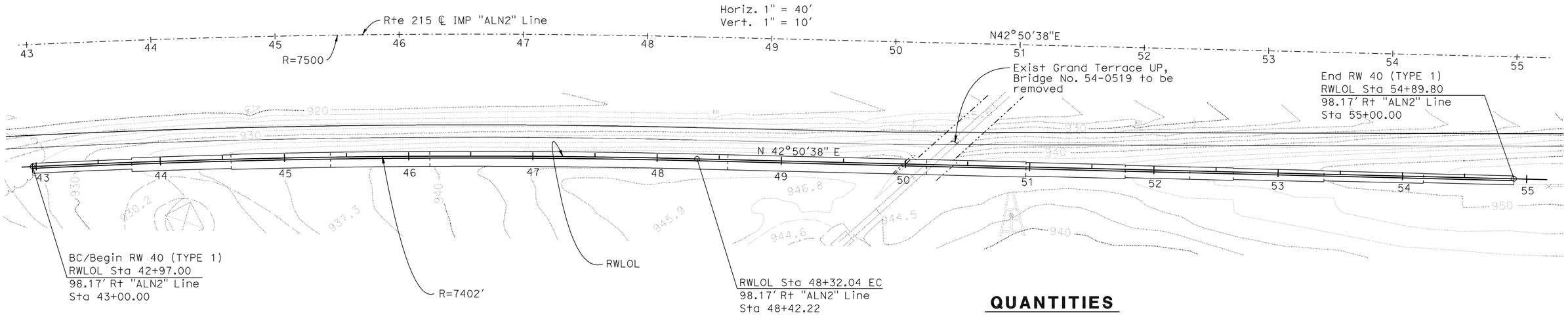

QUANTITIES

STRUCTURE EXCAVATION (RETAINING WALL)	8,377	CY
STRUCTURE BACKFILL (RETAINING WALL)	6,071	CY
PERVIOUS BACKFILL MATERIAL	444	CY
STRUCTURAL CONCRETE, RETAINING WALL	1,961	CY
ARCHITECTURAL SURFACE (TEXTURED CONCRETE BICOUNTY MURAL	18,479	SQFT
BAR REINFORCING STEEL (RETAINING WALL)	278,374	LB
PREPARE AND STAIN CONCRETE	18,479	SQFT
MINOR CONCRETE (GUTTER)	1,193	LF
CABLE RAILING	1,193	LF

NOTES:

1. For "Typical Section" and "Quantities", see "GENERAL PLAN NO. 2" sheet.
2. For "Index to Plans", and "Standard Plans", see "GENERAL PLAN NO. 2" sheet.

NOTE:
THE CONTRACTOR SHALL VERIFY ALL CONTROLLING FIELD DIMENSIONS BEFORE ORDERING OR FABRICATING ANY MATERIAL.

CURVE DATA

R=7402.00'
Δ=04°08'29"
T=267.64'
L=535.04'

PLAN

1" = 40'

DANIEL T. ADAMS
DESIGN ENGINEER

	BY	CHECKED
DESIGN	J. Niu	D. Wong
DETAILS	D. Wong/G. Hallstrom	J. Niu
QUANTITIES	D. Wong	J. Niu

LOAD & RESISTANCE FACTOR DESIGN — LIVE LOADING: HL93 W/"LOW-BOY": PERMIT DESIGN VEHICLE

	BY	CHECKED
LAYOUT	J. Niu	D. Wong
SPECIFICATIONS	J. Corrado	PLANS AND SPECS COMPARED J. Corrado

ORIGINAL SCALE IN INCHES FOR REDUCED PLANS 0 1 2 3

STATE OF CALIFORNIA
DEPARTMENT OF TRANSPORTATION

DIVISION OF ENGINEERING SERVICES
STRUCTURE DESIGN
DESIGN BRANCH 10

BRIDGE NO. 54E0111
POST MILE 0.56

RETAINING WALL NO. 40
GENERAL PLAN NO. 1

UNIT: 3589
PROJECT NUMBER & PHASE: 08000005061
CONTRACT NO.: 08-0M9401

DISREGARD PRINTS BEARING EARLIER REVISION DATES

REVISION DATES: 12-14-11 1-02-12

SHEET 1 OF 26

USERNAME => s12614 DATE PLOTTED => 18-APR-2012 TIME PLOTTED => 17:37

STRUCTURES DESIGN GENERAL PLAN SHEET (ENGLISH) (REV.09-01-10)

FILE => 54e0111agp01.dgn

DIST	COUNTY	ROUTE	POST MILES TOTAL PROJECT	SHEET No.	TOTAL SHEETS
08	Riv,SBd	91,215	21.5/21.7, 43.2/45.2,0.0/5.1	1296	1743

REGISTERED CIVIL ENGINEER 1-2-12 DATE

4-16-12
PLANS APPROVAL DATE

REGISTERED PROFESSIONAL ENGINEER JUSTINE NIU No. C62897 Exp. 6-30-12 CIVIL STATE OF CALIFORNIA

The State of California or its officers or agents shall not be responsible for the accuracy or completeness of electronic copies of this plan sheet.

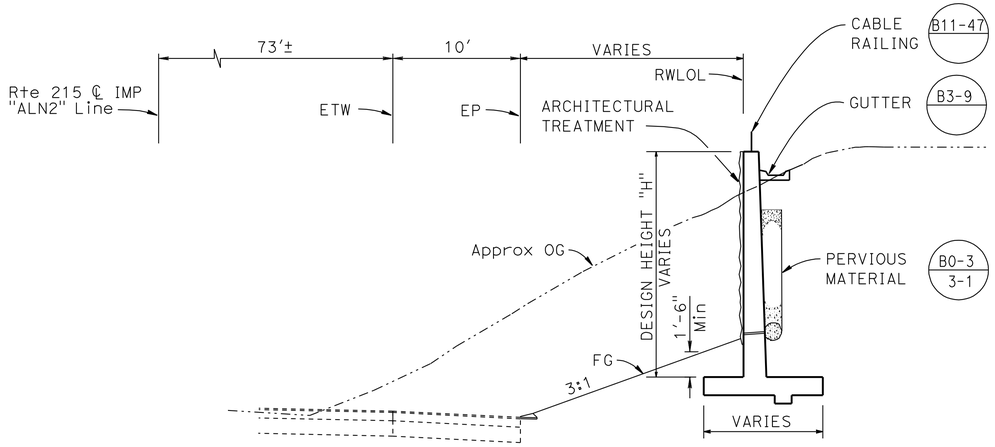

TYPICAL SECTION - RETAINING WALL TYPE 1

1" = 5'-0"

NOTE: For Architectural Treatment details, see "ARCHITECTURAL SURFACE LAYOUT NO. 1 & NO. 2" sheets.

INDEX TO PLANS

Sheet No.	Title
1	GENERAL PLAN NO. 1
2	GENERAL PLAN NO. 2
3	STRUCTURE PLAN NO. 1
4	STRUCTURE PLAN NO. 2
5	STRUCTURE PLAN NO. 3
6	ARCHITECTURAL SURFACE LAYOUT NO. 1
7	ARCHITECTURAL SURFACE LAYOUT NO. 2
8	ARCHITECTURAL SURFACE DETAILS NO. 1
9	ARCHITECTURAL SURFACE DETAILS NO. 2
10	ARCHITECTURAL SURFACE DETAILS NO. 3
11	ARCHITECTURAL SURFACE DETAILS NO. 4
12	ARCHITECTURAL SURFACE DETAILS NO. 5
13	ARCHITECTURAL SURFACE DETAILS NO. 5A
14	ARCHITECTURAL SURFACE DETAILS NO. 6
15	ARCHITECTURAL SURFACE DETAILS NO. 7
16	ARCHITECTURAL SURFACE DETAILS NO. 8
17	ARCHITECTURAL SURFACE DETAILS NO. 8A
18	ARCHITECTURAL SURFACE DETAILS NO. 9
19	ARCHITECTURAL SURFACE DETAILS NO. 10
20	ARCHITECTURAL SURFACE DETAILS NO. 11
21	ARCHITECTURAL SURFACE DETAILS NO. 12
22	ARCHITECTURAL SURFACE DETAILS NO. 13
23	LOG OF TEST BORINGS 1 OF 4
24	LOG OF TEST BORINGS 2 OF 4
25	LOG OF TEST BORINGS 3 OF 4
26	LOG OF TEST BORINGS 4 OF 4

STANDARD PLANS DATED MAY 2006

A10A	ACRONYMS AND ABBREVIATIONS (SHEET 1 OF 2)
A10B	ACRONYMS AND ABBREVIATIONS (SHEET 2 OF 2)
A10C	SYMBOLS (SHEET 1 OF 2)
A10D	SYMBOLS (SHEET 2 OF 2)
A62B	LIMITS OF PAYMENT FOR EXCAVATION AND BACKFILL BRIDGE SURCHARGE AND WALL
B0-1	BRIDGE DETAILS
B0-3	BRIDGE DETAILS
B3-1	RETAINING WALL TYPE 1 H=4' THROUGH 30'
B3-8	RETAINING WALL DETAILS NO. 1
B3-9	RETAINING WALL DETAILS NO. 2
B11-47	CABLE RAILING

STANDARD PLAN SHEET NO.

DETAIL NO.

NOTE:
THE CONTRACTOR SHALL VERIFY ALL CONTROLLING FIELD DIMENSIONS BEFORE ORDERING OR FABRICATING ANY MATERIAL.

DANIEL T. ADAMS
DESIGN ENGINEER

	BY	CHECKED
DESIGN	J. Niu	D. Wong
DETAILS	D. Wong	J. Niu
QUANTITIES	D. Wong	J. Niu

LOAD & RESISTANCE FACTOR DESIGN — LIVE LOADING: HL93 W/"LOW-BOY"; PERMIT DESIGN VEHICLE

	BY	CHECKED
LAYOUT	J. Niu	D. Wong
SPECIFICATIONS	J. Corrado	PLANS AND SPECS COMPARED J. Corrado

ORIGINAL SCALE IN INCHES FOR REDUCED PLANS 0 1 2 3

STATE OF CALIFORNIA
DEPARTMENT OF TRANSPORTATION

DIVISION OF ENGINEERING SERVICES
STRUCTURE DESIGN
DESIGN BRANCH 10

BRIDGE NO. 54E0111
POST MILE 0.56

RETAINING WALL NO. 40
GENERAL PLAN NO. 2

UNIT: 3589
PROJECT NUMBER & PHASE: 08000005061
CONTRACT NO.: 08-0M9401

DISREGARD PRINTS BEARING EARLIER REVISION DATES

REVISION DATES: 12-14-11 1-02-12

SHEET 2 OF 26

USERNAME => s121614 DATE PLOTTED => 18-APR-2012 TIME PLOTTED => 17:38

STRUCTURES DESIGN GENERAL PLAN SHEET (ENGLISH) (REV.09-01-10)

FILE => 54e0111agp02.dgn

DIST	COUNTY	ROUTE	POST MILES TOTAL PROJECT	SHEET No.	TOTAL SHEETS
08	Riv,SBd	91,215	21.5/21.7, 43.2/45.2,0.0/5.1	1297	1743

REGISTERED CIVIL ENGINEER 1-2-12 DATE

4-16-12
PLANS APPROVAL DATE

REGISTERED PROFESSIONAL ENGINEER JUSTINE NIU No. C62897 Exp. 6-30-12 CIVIL STATE OF CALIFORNIA

The State of California or its officers or agents shall not be responsible for the accuracy or completeness of electronic copies of this plan sheet.

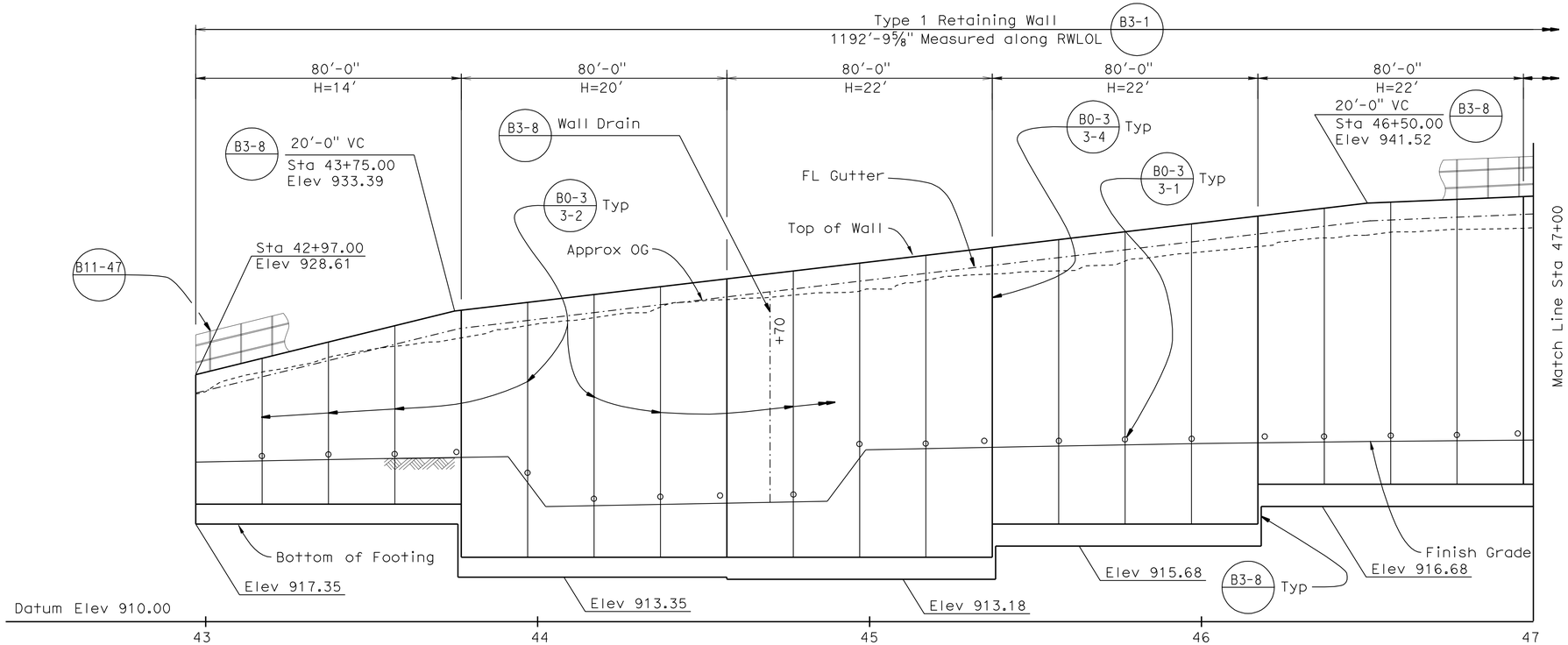

MIRRORED DEVELOPED ELEVATION

Horiz: 1" = 20'
Vert: 1" = 5'

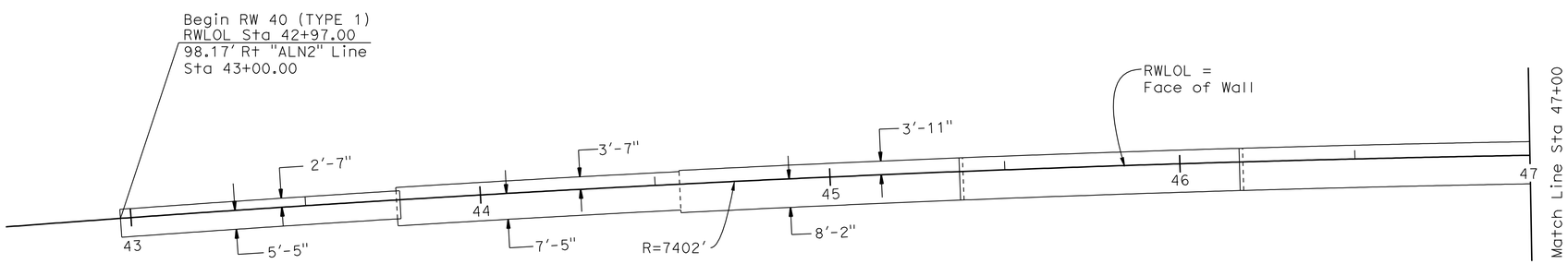

PLAN

1" = 20'

ELEVATION TABLE	
STATION	FG
42+97.00	922.02
43+91.13	922.43
44+02.42	918.67
44+87.25	919.07
44+98.54	922.94
45+00.00	922.94
45+50.00	923.19
46+00.00	923.41
46+50.00	923.57
47+00.00	923.68
47+50.00	924.02
48+00.00	924.40
48+32.04	924.66
48+50.00	924.85
49+00.00	925.41
49+50.00	926.06
50+00.00	927.02
50+50.00	928.30
51+00.00	930.10
51+50.00	931.84
51+80.51	933.22
52+00.00	934.13
52+25.00	935.27
52+50.00	936.40
53+00.00	938.54
53+50.00	940.69
54+00.00	942.83
54+50.00	945.01
54+92.91	946.85

CURVE DATA
R = 7402'
Δ = 04°08'29"
T = 267.64'
L = 535.04'

NOTES:
1. Architectural treatment should extend 6" below FG.
2. For Structural Sections, see "ROAD PLANS".
3. For rounding details, see "ARCHITECTURAL TREATMENT" plans.

NOTE:
THE CONTRACTOR SHALL VERIFY ALL CONTROLLING FIELD DIMENSIONS BEFORE ORDERING OR FABRICATING ANY MATERIAL.

	BY	CHECKED
DESIGN	J. Niu	D. Wong
DETAILS	D. Wong/M. Lane	J. Niu
QUANTITIES	D. Wong	J. Niu

STATE OF CALIFORNIA
DEPARTMENT OF TRANSPORTATION

DIVISION OF ENGINEERING SERVICES
STRUCTURE DESIGN
DESIGN BRANCH 10

BRIDGE NO. 54E0111
POST MILE 0.56

RETAINING WALL NO. 40
STRUCTURE PLAN NO. 1

STRUCTURES DESIGN DETAIL SHEET (ENGLISH) (REV. 09-01-10)

ORIGINAL SCALE IN INCHES FOR REDUCED PLANS 0 1 2 3

UNIT: 3589
PROJECT NUMBER & PHASE: 08000005061
CONTRACT NO.: 08-0M9401

DISREGARD PRINTS BEARING EARLIER REVISION DATES → 1-02-12

REVISION DATES | SHEET 3 OF 26

FILE => 54e0111csp03.dgn

USERNAME => s121614 DATE PLOTTED => 18-APR-2012 TIME PLOTTED => 17:38

DIST	COUNTY	ROUTE	POST MILES TOTAL PROJECT	SHEET No.	TOTAL SHEETS
08	Riv,SBd	91,215	21.5/21.7, 43.2/45.2,0.0/5.1	1298	1743

REGISTERED CIVIL ENGINEER 1-2-12 DATE

4-16-12
PLANS APPROVAL DATE

REGISTERED PROFESSIONAL ENGINEER JUSTINE NIU No. C62897 Exp. 6-30-12 CIVIL STATE OF CALIFORNIA

The State of California or its officers or agents shall not be responsible for the accuracy or completeness of electronic copies of this plan sheet.

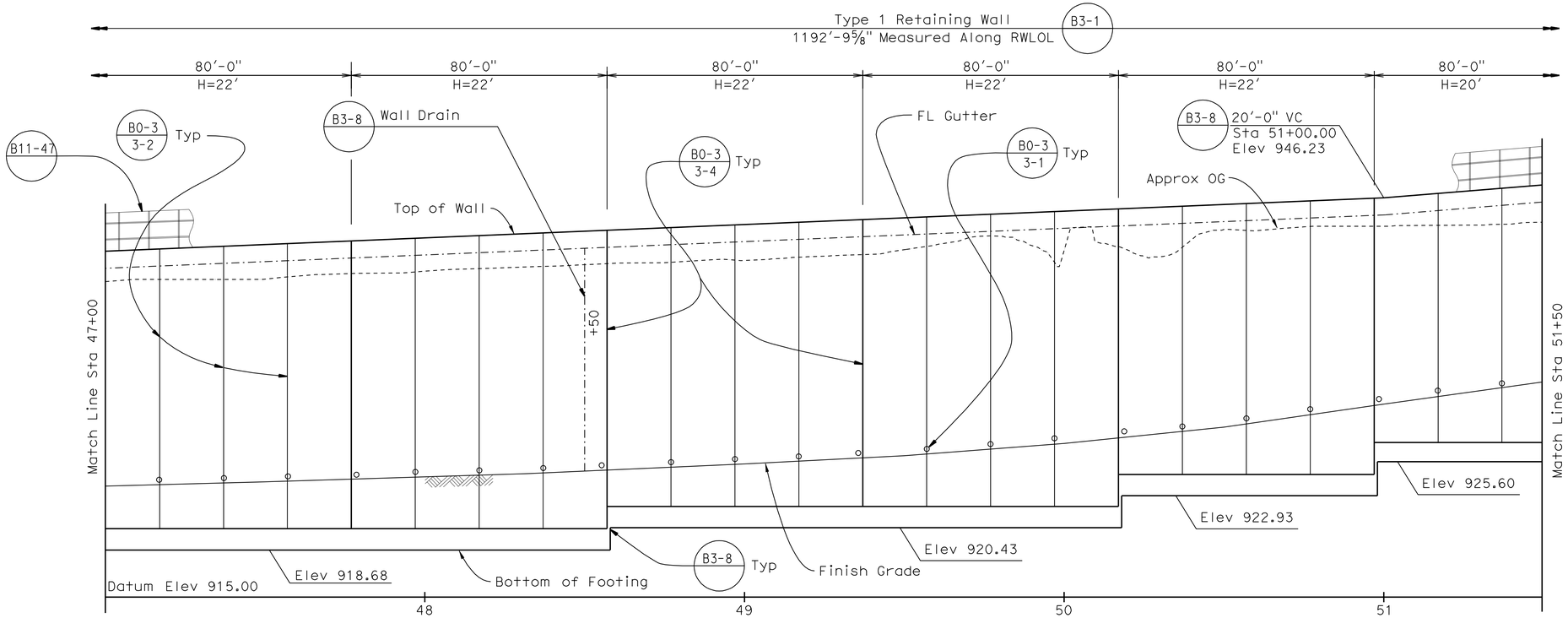

MIRRORED DEVELOPED ELEVATION

Horiz: 1" = 20'
Vert: 1" = 5'

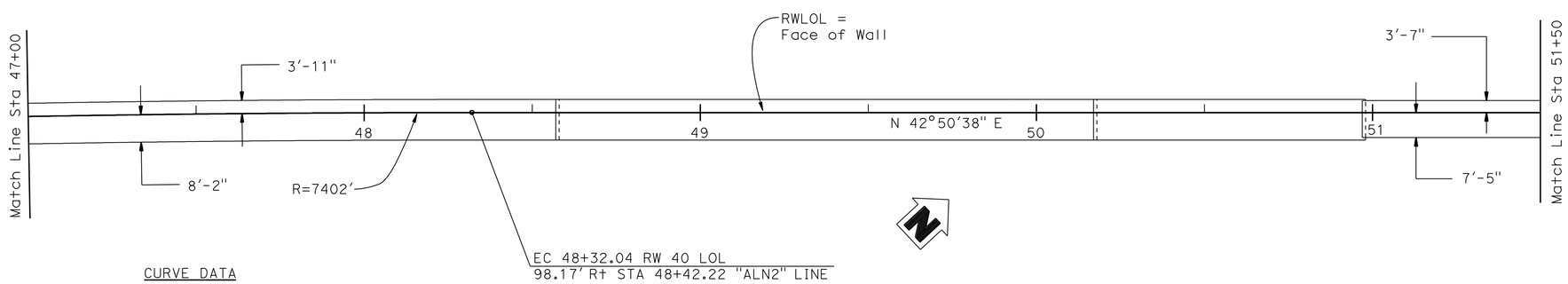

CURVE DATA
R = 7402'
Δ = 04°08' 29"
T = 267.64'
L = 535.04'

PLAN

1" = 20'

NOTE:
THE CONTRACTOR SHALL VERIFY ALL CONTROLLING FIELD DIMENSIONS BEFORE ORDERING OR FABRICATING ANY MATERIAL.

	BY	CHECKED
DESIGN	J. Niu	D. Wong
DETAILS	D. Wong/M. Lane	J. Niu
QUANTITIES	D. Wong	J. Niu

STATE OF CALIFORNIA
DEPARTMENT OF TRANSPORTATION

DIVISION OF ENGINEERING SERVICES
STRUCTURE DESIGN
DESIGN BRANCH 10

BRIDGE NO. 54E0111
POST MILE 0.56

RETAINING WALL NO. 40
STRUCTURE PLAN NO. 2

STRUCTURES DESIGN DETAIL SHEET (ENGLISH) (REV. 09-01-10)

ORIGINAL SCALE IN INCHES FOR REDUCED PLANS 0 1 2 3

UNIT: 3589
PROJECT NUMBER & PHASE: 08000005061
CONTRACT NO.: 08-0M9401

DISREGARD PRINTS BEARING EARLIER REVISION DATES

REVISION DATES: 1-02-12

SHEET 4 OF 26

FILE => 54e0111csp04.dgn

USERNAME => s121614 DATE PLOTTED => 18-APR-2012 TIME PLOTTED => 17:38

DIST	COUNTY	ROUTE	POST MILES TOTAL PROJECT	SHEET No.	TOTAL SHEETS
08	Riv,SBd	91,215	21.5/21.7, 43.2/45.2,0.0/5.1	1299	1743

REGISTERED CIVIL ENGINEER 1-2-12 DATE

4-16-12
PLANS APPROVAL DATE

REGISTERED PROFESSIONAL ENGINEER JUSTINE NIU No. C62897 Exp. 6-30-12 CIVIL STATE OF CALIFORNIA

The State of California or its officers or agents shall not be responsible for the accuracy or completeness of electronic copies of this plan sheet.

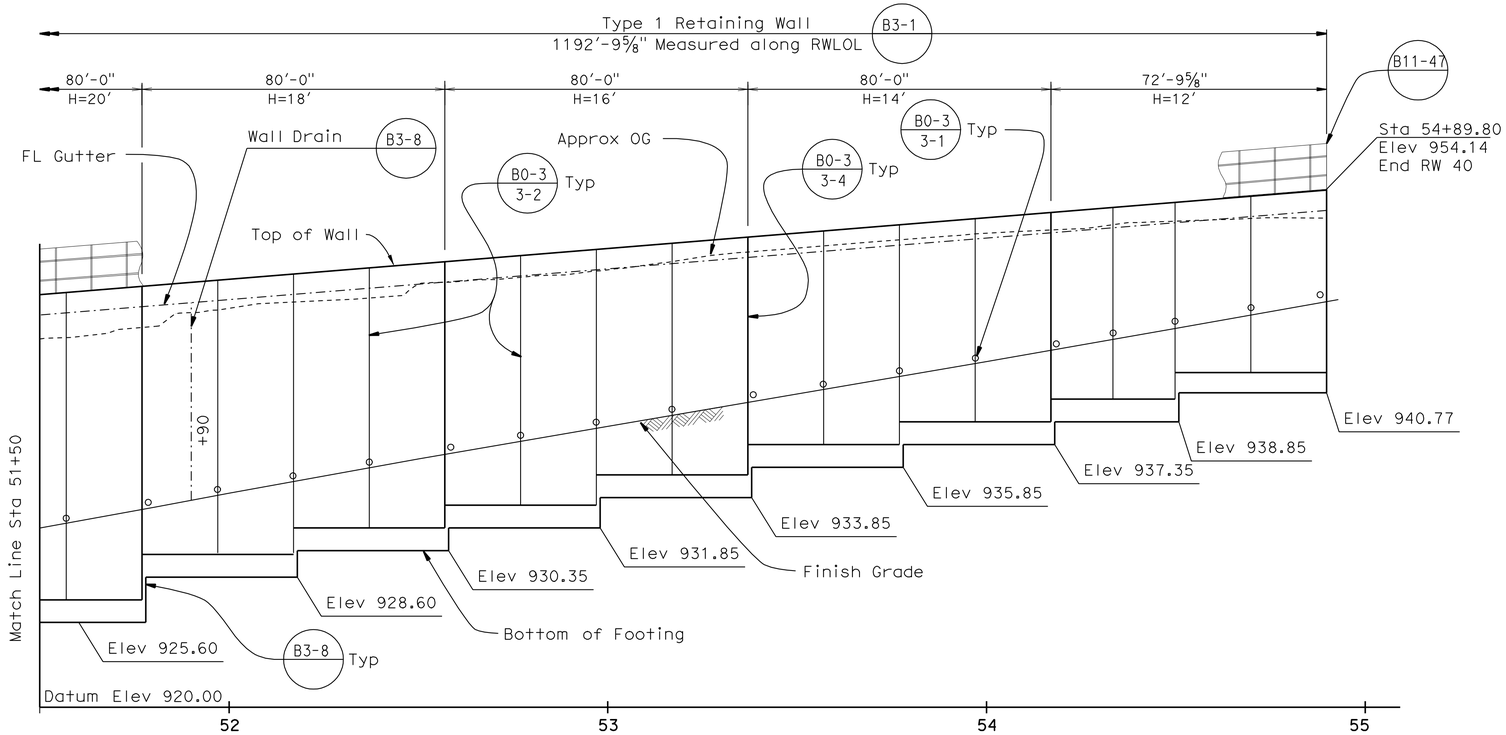

MIRRORED DEVELOPED ELEVATION

Horiz: 1" = 20'
Vert: 1" = 5'

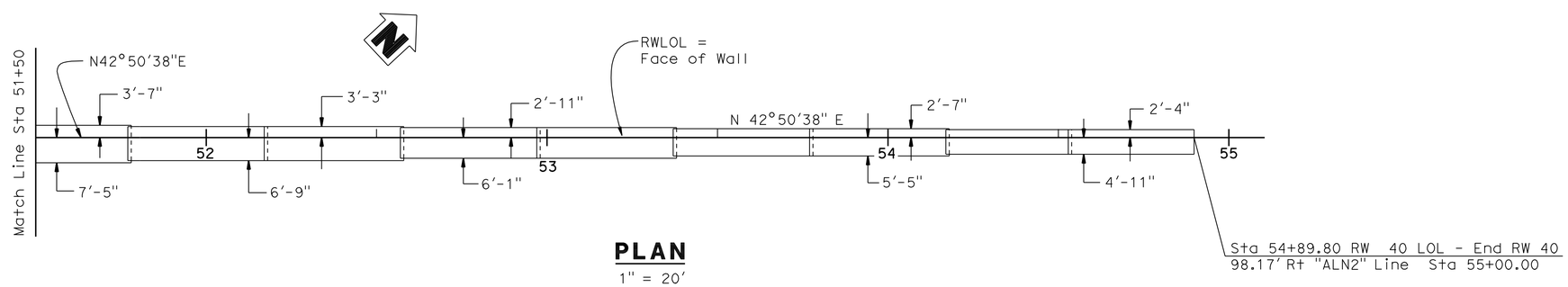

PLAN

1" = 20'

NOTE:
THE CONTRACTOR SHALL VERIFY ALL CONTROLLING FIELD DIMENSIONS BEFORE ORDERING OR FABRICATING ANY MATERIAL.

	BY	CHECKED
DESIGN	J. Niu	D. Wong
DETAILS	D. Wong	J. Niu
QUANTITIES	D. Wong	J. Niu

STATE OF CALIFORNIA
DEPARTMENT OF TRANSPORTATION

DIVISION OF ENGINEERING SERVICES
STRUCTURE DESIGN
DESIGN BRANCH 10

BRIDGE NO. 54E0111
POST MILE 0.56

RETAINING WALL NO. 40
STRUCTURE PLAN NO. 3

STRUCTURES DESIGN DETAIL SHEET (ENGLISH) (REV. 09-01-10)

ORIGINAL SCALE IN INCHES FOR REDUCED PLANS 0 1 2 3

UNIT: 3589
PROJECT NUMBER & PHASE: 08000005061
CONTRACT NO.: 08-0M9401

DISREGARD PRINTS BEARING EARLIER REVISION DATES

REVISION DATES: 1-02-12

SHEET 5 OF 26

FILE => 54e0111csp05.dgn

USERNAME => s121614 DATE PLOTTED => 18-APR-2012 TIME PLOTTED => 17:38

DIST	COUNTY	ROUTE	POST MILES TOTAL PROJECT	SHEET No.	TOTAL SHEETS
08	Riv,SBd	91,215	21.5/21.7, 43.2/45.2,0.0/5.1	1300	1743

LICENSED LANDSCAPE ARCHITECT — DATE 3-29-12

4-16-12
PLANS APPROVAL DATE

LICENSED LANDSCAPE ARCHITECT — RAY DESSELLE — No. 2916 — Exp. 11-30-13 — STATE OF CALIFORNIA

The State of California or its officers or agents shall not be responsible for the accuracy or completeness of electronic copies of this plan sheet.

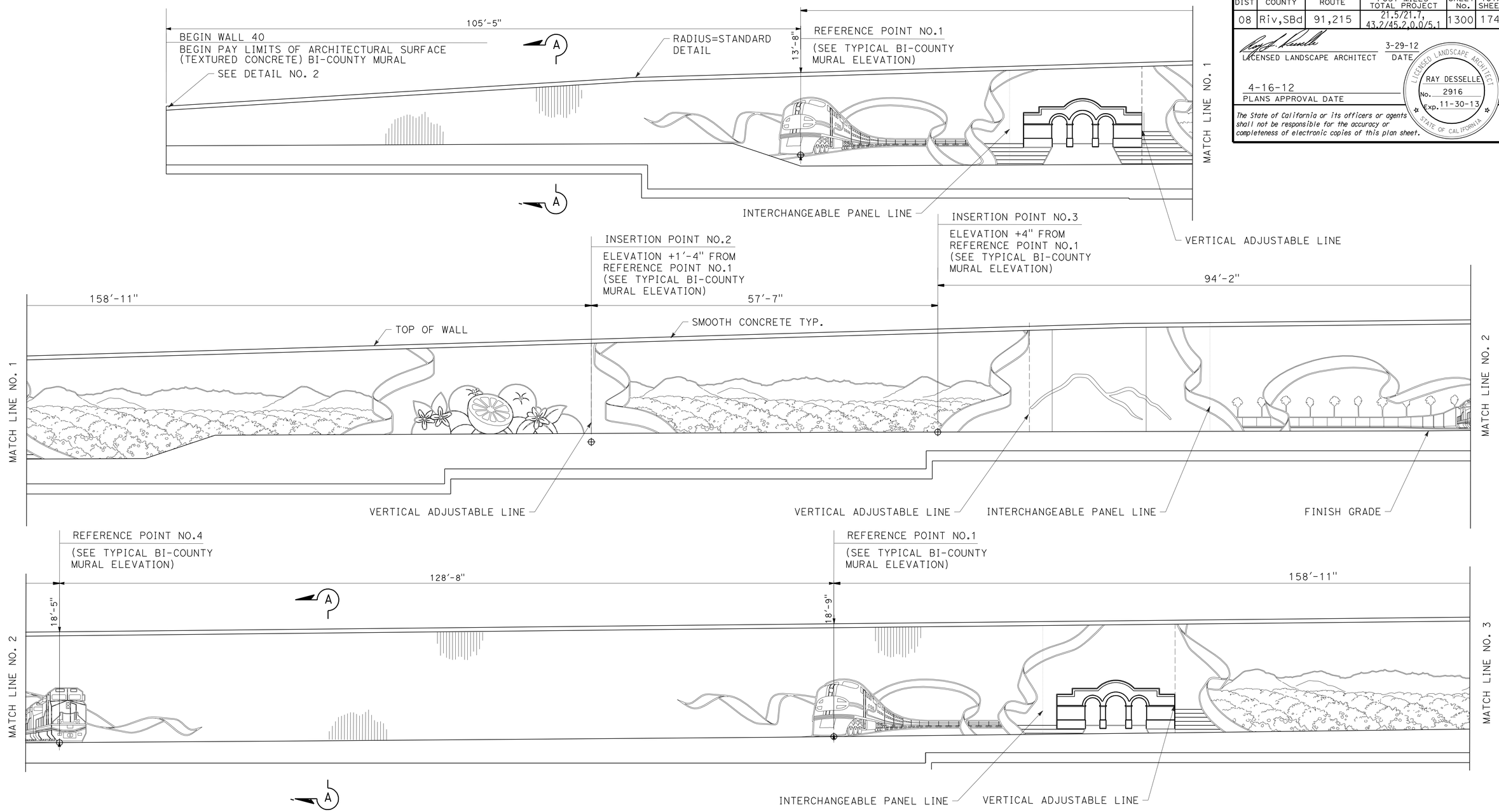

ELEVATION

1/8"=1'-0"

NOTES:

1. For Typical Bi-County Mural Elevation, see "ARCHITECTURAL SURFACE DETAILS NO. 1& NO. 2" sheets.
2. For Section A-A, see "ARCHITECTURAL SURFACE DETAILS NO. 11" sheet.
3. For Detail No. 2, see "ARCHITECTURAL SURFACE DETAILS NO. 13" sheet.

NOTE:
THE CONTRACTOR SHALL VERIFY ALL CONTROLLING FIELD DIMENSIONS BEFORE ORDERING OR FABRICATING ANY MATERIAL.

THIS PLAN IS ACCURATE FOR ARCHITECTURAL TREATMENT WORK ONLY.

	BY	CHECKED
DESIGN	M. Hall/B. Fleming/B. Strout	M. Bishop
DETAILS	M. Bishop	M. Hall
QUANTITIES	D. Wong	J. Niu

STATE OF CALIFORNIA
DEPARTMENT OF TRANSPORTATION

DIVISION OF ENGINEERING SERVICES
STRUCTURE DESIGN
DESIGN BRANCH 10

BRIDGE NO. 54E0111
POST MILE 0.56

RETAINING WALL NO. 40
ARCHITECTURAL SURFACE LAYOUT NO. 1

STRUCTURES DESIGN DETAIL SHEET (ENGLISH) (REV. 09-01-10)

ORIGINAL SCALE IN INCHES FOR REDUCED PLANS 0 1 2 3

UNIT: 3589
PROJECT NUMBER & PHASE: 08000005061
CONTRACT NO.: 08-0M9401

DISREGARD PRINTS BEARING EARLIER REVISION DATES → 12-08-11 2-10-12

SHEET 6 OF 26

FILE => 54e0111das0106.dgn

USERNAME => s121614 DATE PLOTTED => 18-APR-2012 TIME PLOTTED => 17:38