Dist	COUNTY	ROUTE	POST MILES TOTAL PROJECT	SHEET No.	TOTAL SHEETS
08	Riv,SBd	91,215	21.5/21.7, 43.2/45.2,0.0/5.1	713	1743

REGISTERED CIVIL ENGINEER 2-10-12 DATE

4-16-12
PLANS APPROVAL DATE

REGISTERED PROFESSIONAL ENGINEER JUSTINE NIU No. C 62897 Exp. 6-30-12 CIVIL STATE OF CALIFORNIA

THE STATE OF CALIFORNIA OR ITS OFFICERS OR AGENTS SHALL NOT BE RESPONSIBLE FOR THE ACCURACY OR COMPLETENESS OF SCANNED COPIES OF THIS PLAN SHEET.

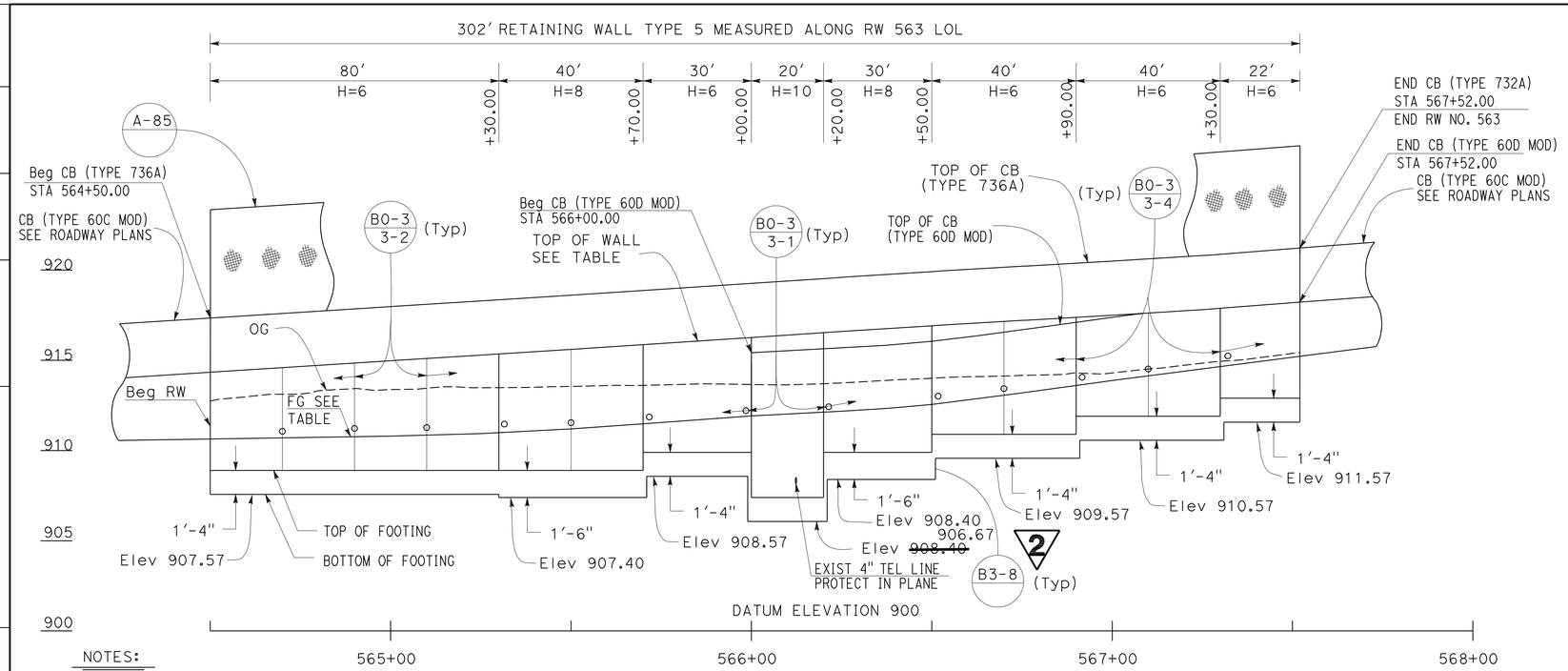

NOTES:

1. ARCHITECTURAL TREATMENT SHOULD EXTEND 6 IN BELOW FG OR 6 IN BELOW TOP CB (TYPE 60D MOD)
2. FOR STRUCTURAL SECTIONS, SEE ROADWAY PLANS
3. WATERSTOP IN EXPANSION JOINT SHALL BE EXTEND 6 IN INTO THE BARRIER
4. FOR POST ANCHORAGE DETAILS, SEE B11-52

ELEVATION

SCALE Horiz 1"=20'
Vert 1"=4'

ELEVATION TABLE		
STATION	TOP OF WALL	FG
564+50.00	914.34	910.64
565+00.00	914.97	910.80
565+50.00	915.60	911.20
566+00.00	916.26	911.92
566+50.00	916.91	912.55
567+00.00	917.49	913.88
567+50.00	918.19	915.17
567+52.00	918.22	915.22

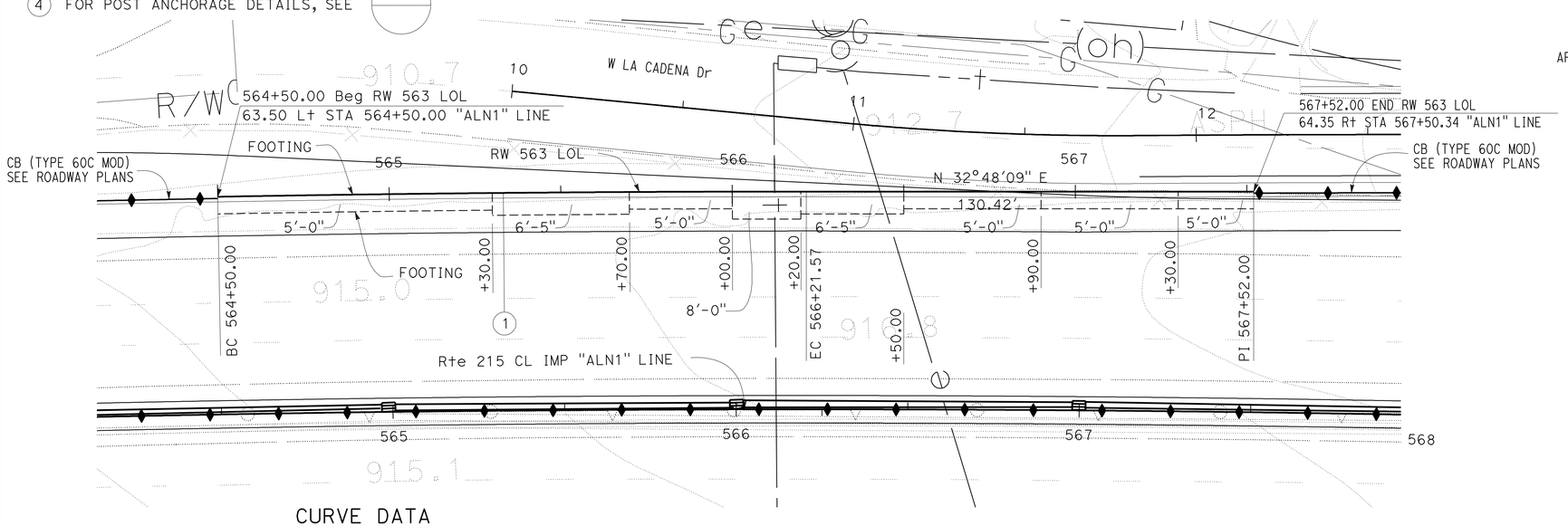

CURVE DATA

No. ⊕	R	Δ	T	L
1	9663'	1°1'02"	85.79'	171.57'

PLAN

SCALE 1"=20'

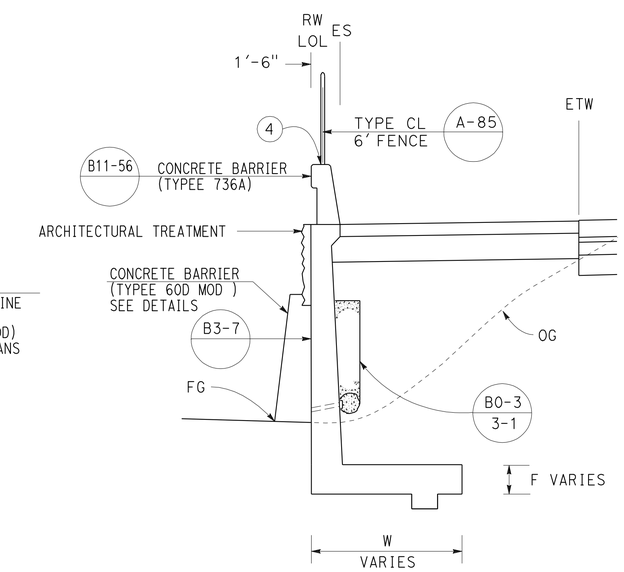

TYPEICAL SECTION

NO SCALE

FROM STA 564+50.00 TO STA 567+52.00

RETAINING WALL PLAN

RETAINING WALL No. 563

2 **REVISED PER ADDENDUM No. 2 DATED OCTOBER 5, 2012**

APPROVED FOR RETAINING WALL WORK ONLY

SCALE AS SHOWN **R5-1**

REVISED BY | DATE REVISED
DAT H. WONG | JUSTINE NIU
CALCULATED-DESIGNED BY | CHECKED BY
FUNCTIONAL SUPERVISOR: BEN AMIRI

STATE OF CALIFORNIA - DEPARTMENT OF TRANSPORTATION
Caltrans
DESIGN

LAST REVISION 02-10-12 | DATE PLOTTED => 05-OCT-2012 | TIME PLOTTED => 11:08

DIST	COUNTY	ROUTE	POST MILES TOTAL PROJECT	SHEET No.	TOTAL SHEETS
08	Riv,SBd	91,215	21.5/21.7, 43.2/45.2,0.0/5.1	719	1743

REGISTERED CIVIL ENGINEER 1-2-12 DATE

4-16-12
PLANS APPROVAL DATE

REGISTERED PROFESSIONAL ENGINEER LARRY WU No. C57035 Exp. 6-30-13 CIVIL STATE OF CALIFORNIA

The State of California or its officers or agents shall not be responsible for the accuracy or completeness of electronic copies of this plan sheet.

1

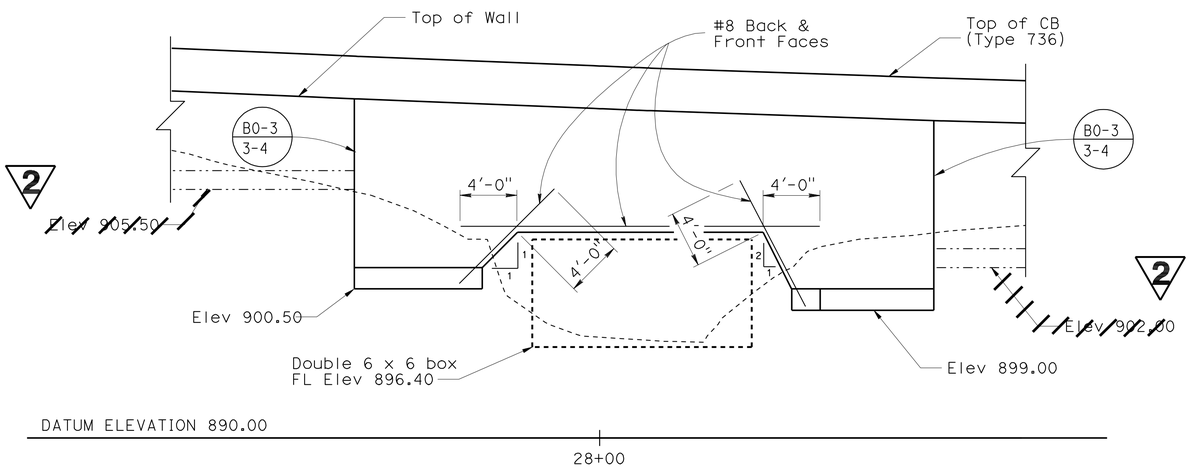

MIRROR DEVELOPED ELEVATION

3/16"=1'-0"

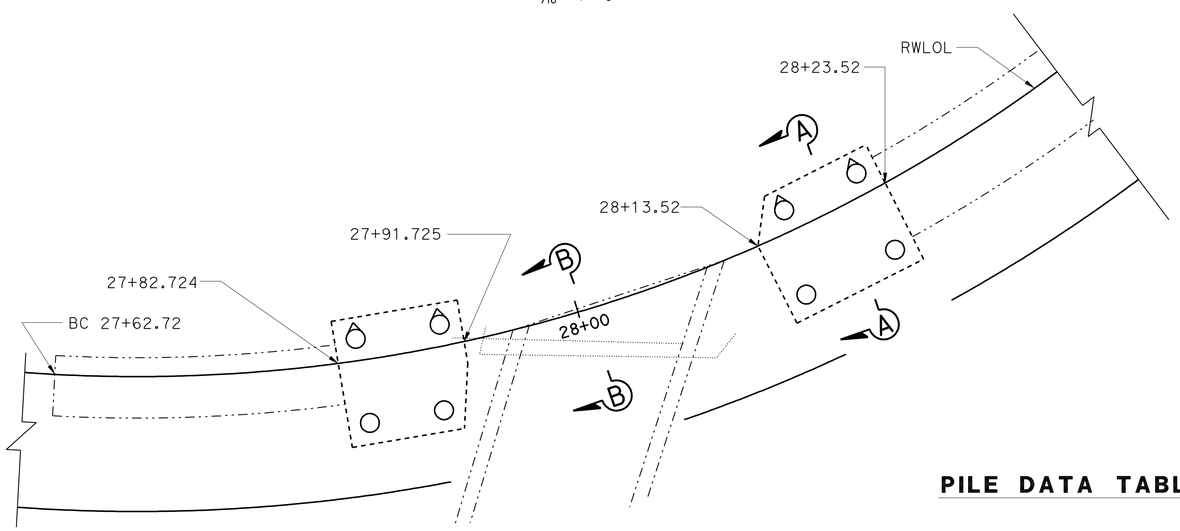

PLAN

3/16"=1'-0"

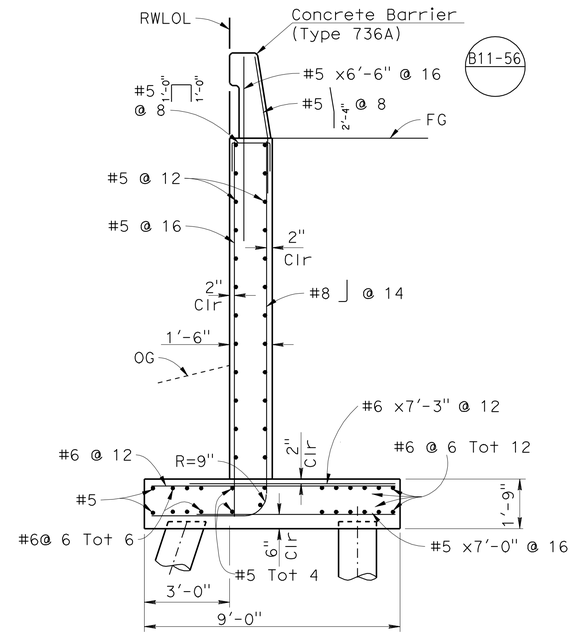

SECTION A-A

3/8"=1'-0"

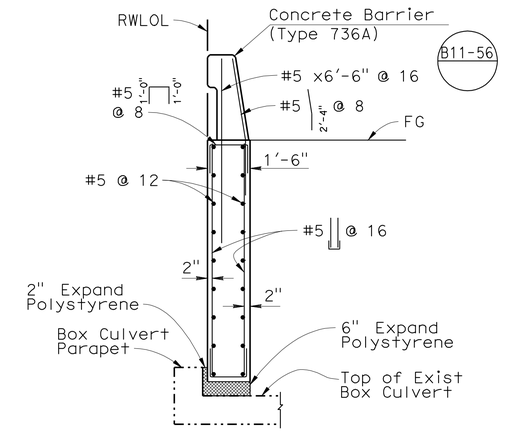

SECTION B-B

3/8"=1'-0"

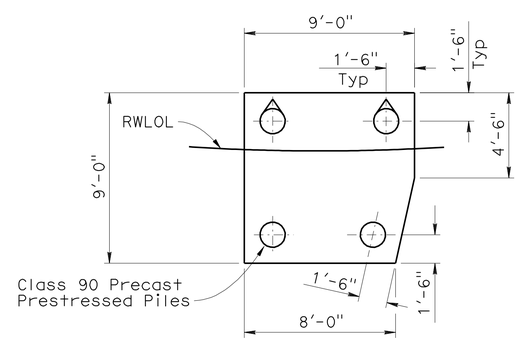

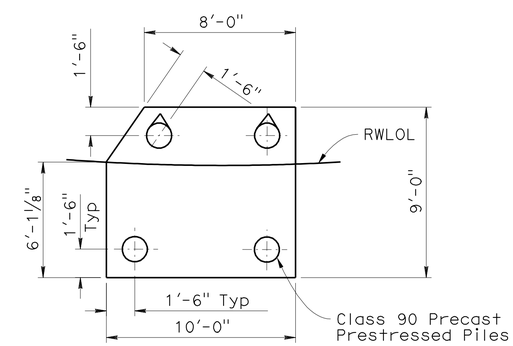

FOOTING AND PILE LAYOUT

1/4"=1'-0"

PILE DATA TABLE

Locations	Pile Type	Required Nominal Resistance (kips)		Design Tip Elevation (ft)	Specidied Tip Elevation (ft)	Nominal Driving Resistance (kips)
		Compression	Tension			
Ret Wall 29	Class 90 Alt "X"	90	0	875.0	875.0	90

LEGEND:

Indicates 1:3 Battered Piles

NOTE:
THE CONTRACTOR SHALL VERIFY ALL CONTROLLING FIELD DIMENSIONS BEFORE ORDERING OR FABRICATING ANY MATERIAL.

1 REVISED PER ADDENDUM No. 1 DATED OCTOBER 3, 2012

2 REVISED PER ADDENDUM No. 2 DATED OCTOBER 5, 2012

R6-2

DANIEL T. ADAMS
DESIGN ENGINEER

	BY	CHECKED			
DESIGN	H. Vu	R. Stiltz	LOAD & RESISTANCE FACTOR DESIGN	LIVE LOADING: HL93 W/"LOW-BOY": PERMIT DESIGN VEHICLE	
DETAILS	Y. Tang	R. Stiltz	LAYOUT	H. Vu	R. Stiltz
QUANTITIES	X	X	SPECIFICATIONS	J. Corrado	PLANS AND SPECS COMPARED J. Corrado

ORIGINAL SCALE IN INCHES FOR REDUCED PLANS 0 1 2 3

STATE OF CALIFORNIA
DEPARTMENT OF TRANSPORTATION

DIVISION OF ENGINEERING SERVICES
STRUCTURE DESIGN
DESIGN BRANCH 10

BRIDGE NO. RW 29
POST MILE X

RETAINING WALL NO. 29
RETAINING WALL DETAILS

UNIT: 3589
PROJECT NUMBER & PHASE: 08000005061
CONTRACT NO.: 08-0M9401

DISREGARD PRINTS BEARING EARLIER REVISION DATES

REVISION DATES 11-10-11 | SHEET X | OF X

FILE => 80m94uqf002.dgn

STRUCTURES DESIGN GENERAL PLAN SHEET (ENGLISH) (REV.09-01-10)

USERNAME => s124436 DATE PLOTTED => 05-OCT-2012 TIME PLOTTED => 11:08

Dist	COUNTY	ROUTE	POST MILES TOTAL PROJECT	SHEET No.	TOTAL SHEETS
08	Riv,SBd	91,215	21.5/21.7, 43.2/45.2,0.0/5.1	733	1743

REGISTERED CIVIL ENGINEER 1-2-12 DATE

4-16-12
PLANS APPROVAL DATE

REGISTERED PROFESSIONAL ENGINEER
JUSTINE NIU
No. C 62897
Exp. 6-30-12
CIVIL
STATE OF CALIFORNIA

THE STATE OF CALIFORNIA OR ITS OFFICERS OR AGENTS SHALL NOT BE RESPONSIBLE FOR THE ACCURACY OR COMPLETENESS OF SCANNED COPIES OF THIS PLAN SHEET.

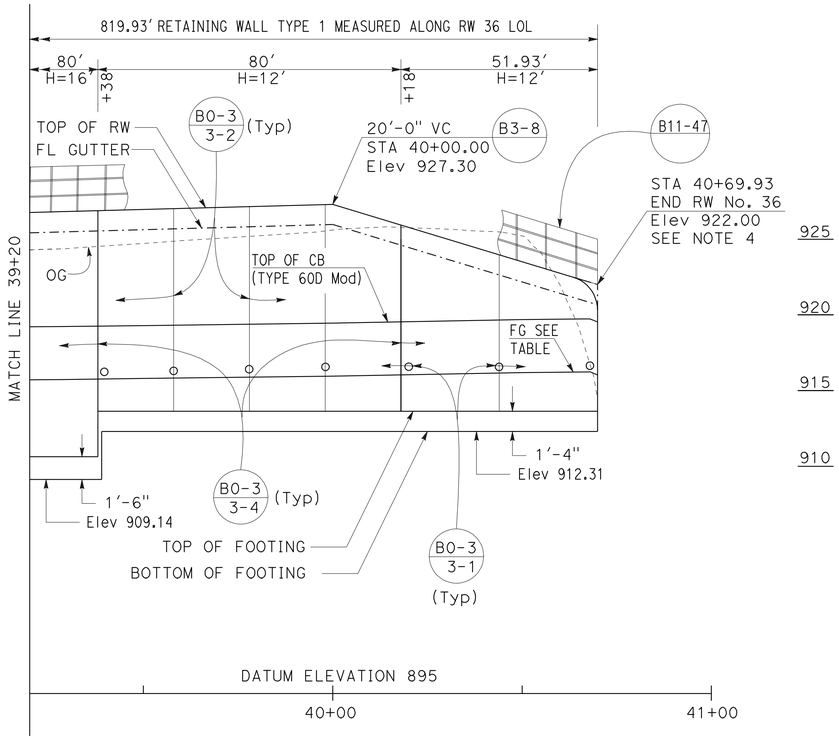

ELEVATION

SCALE Horiz 1"=20'
Vert 1"=5'

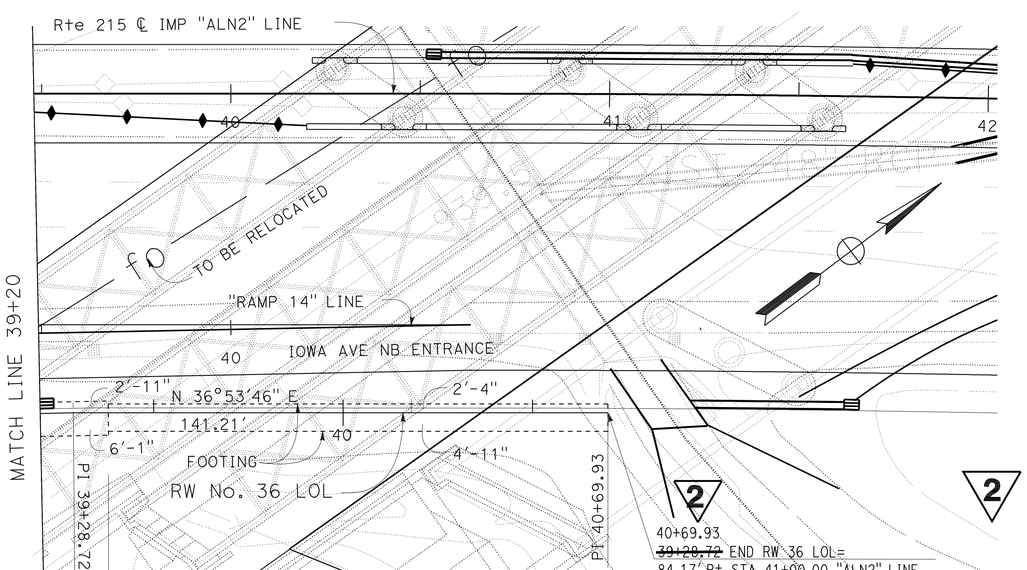

PLAN

SCALE 1"=20'

2 **REVISED PER ADDENDUM No. 2 DATED OCTOBER 5, 2012**

RETAINING WALL PLAN

RETAINING WALL No.36

SCALE AS SHOWN **R8-3**

APPROVED FOR RETAINING WALL WORK ONLY

STATE OF CALIFORNIA - DEPARTMENT OF TRANSPORTATION
Caltrans
DESIGN
FUNCTIONAL SUPERVISOR: BEN AMIRI
CALCULATED-DESIGNED BY: MARK DE LA VEGA
CHECKED BY: DAT H. WONG
REVISED BY
DATE REVISED

LAST REVISION 01-02-12
DATE PLOTTED => 05-OCT-2012
TIME PLOTTED => 11:14

Dist	COUNTY	ROUTE	POST MILES TOTAL PROJECT	SHEET No.	TOTAL SHEETS
08	Riv,SBd	91,215	21.5/21.7, 43.2/45.2,0.0/5.1	762	1743

REGISTERED CIVIL ENGINEER 1-2-12 DATE

4-16-12
PLANS APPROVAL DATE

REGISTERED PROFESSIONAL ENGINEER JUSTINE NIU No. C 62897 Exp. 6-30-12 CIVIL STATE OF CALIFORNIA

THE STATE OF CALIFORNIA OR ITS OFFICERS OR AGENTS SHALL NOT BE RESPONSIBLE FOR THE ACCURACY OR COMPLETENESS OF SCANNED COPIES OF THIS PLAN SHEET.

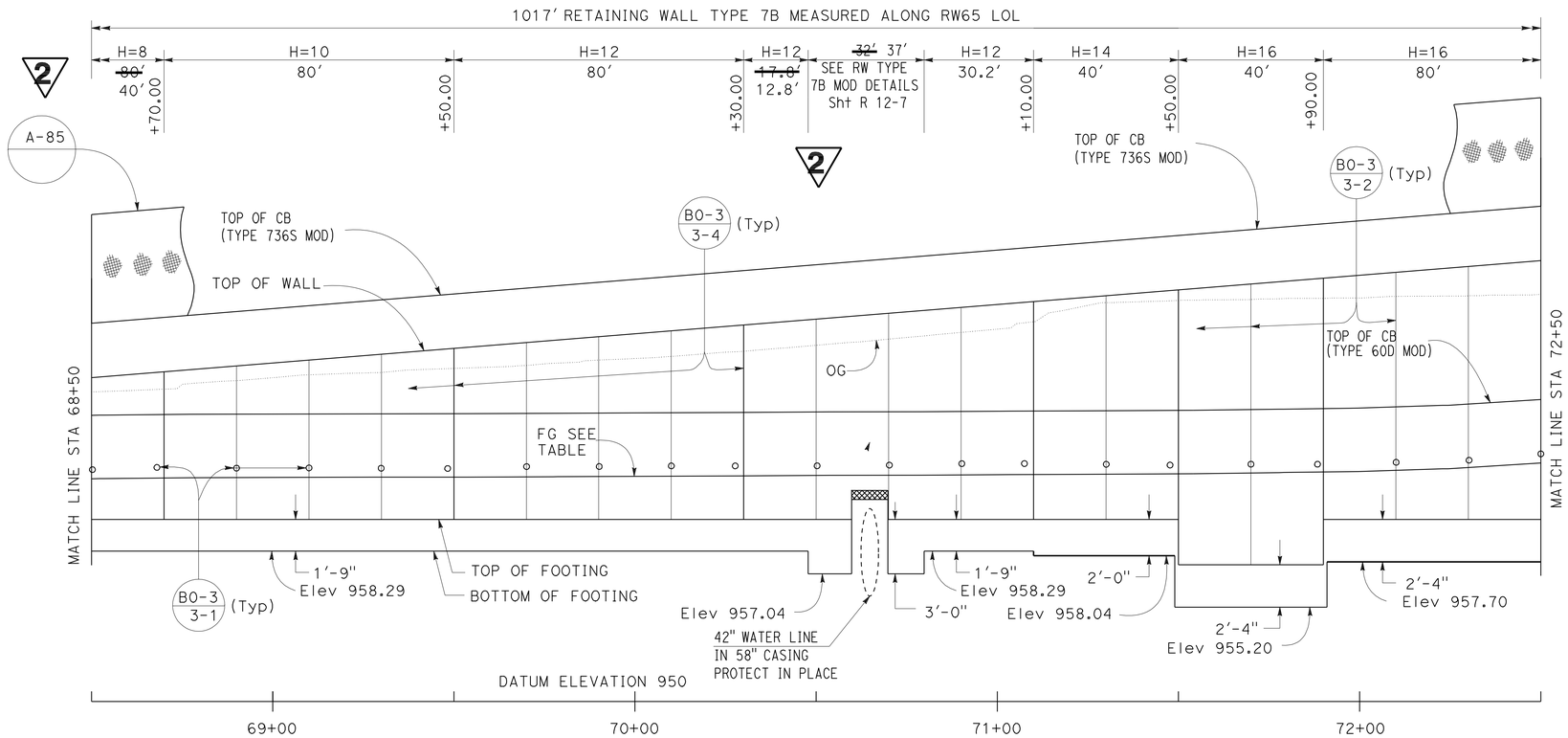

ELEVATION

SCALE Horiz. 1"=20'
Vert 1"=4'

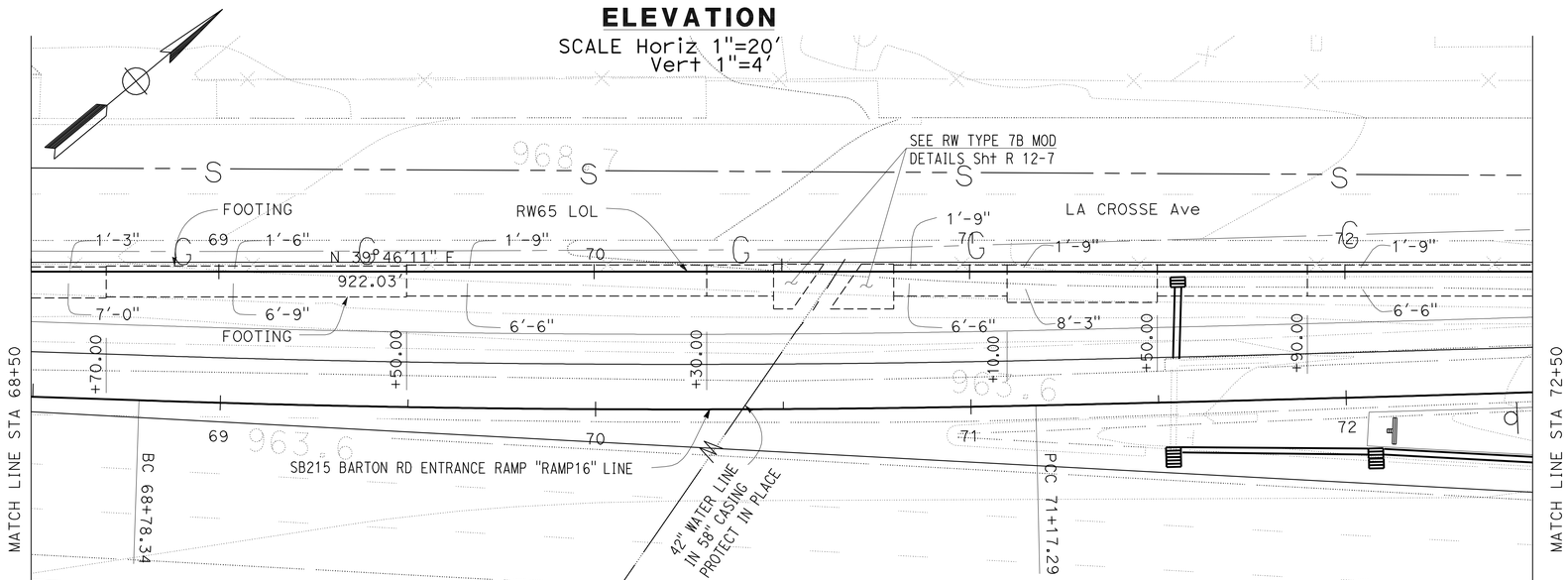

PLAN

SCALE 1"=20'

APPROVED FOR RETAINING WALL WORK ONLY

2 REVISED PER ADDENDUM No. 2 DATED OCTOBER 5, 2012

RETAINING WALL PLAN

RETAINING WALL No. 65

SCALE AS SHOWN **R12-2**

STATE OF CALIFORNIA - DEPARTMENT OF TRANSPORTATION
Caltrans® DESIGN

FUNCTIONAL SUPERVISOR: BEN AMIRI
CALCULATED-DESIGNED BY: VINH TRUONG
CHECKED BY: DAT H. WONG
REVISED BY
DATE REVISED

LAST REVISION 01-02-12
DATE PLOTTED => 05-OCT-2012
TIME PLOTTED => 11:08

Dist	COUNTY	ROUTE	POST MILES TOTAL PROJECT	SHEET No.	TOTAL SHEETS
08	Riv,SBd	91,215	21.5/21.7, 43.2/45.2,0.0/5.1	827	1743

REGISTERED CIVIL ENGINEER 3-7-12 DATE

4-16-12
PLANS APPROVAL DATE

REGISTERED PROFESSIONAL ENGINEER JUSTINE NIU No. C 62897 Exp. 6-30-12 CIVIL STATE OF CALIFORNIA

THE STATE OF CALIFORNIA OR ITS OFFICERS OR AGENTS SHALL NOT BE RESPONSIBLE FOR THE ACCURACY OR COMPLETENESS OF SCANNED COPIES OF THIS PLAN SHEET.

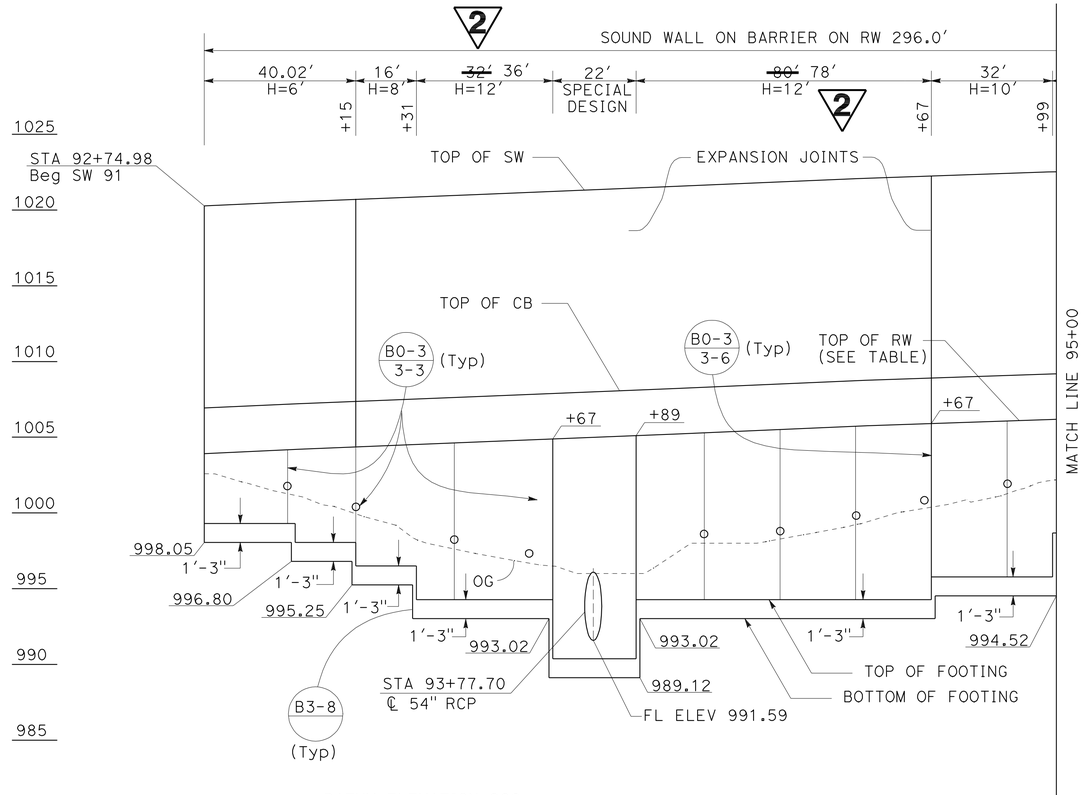

ELEVATION

SCALE Horiz 1"=20'
Vert 1"=5'

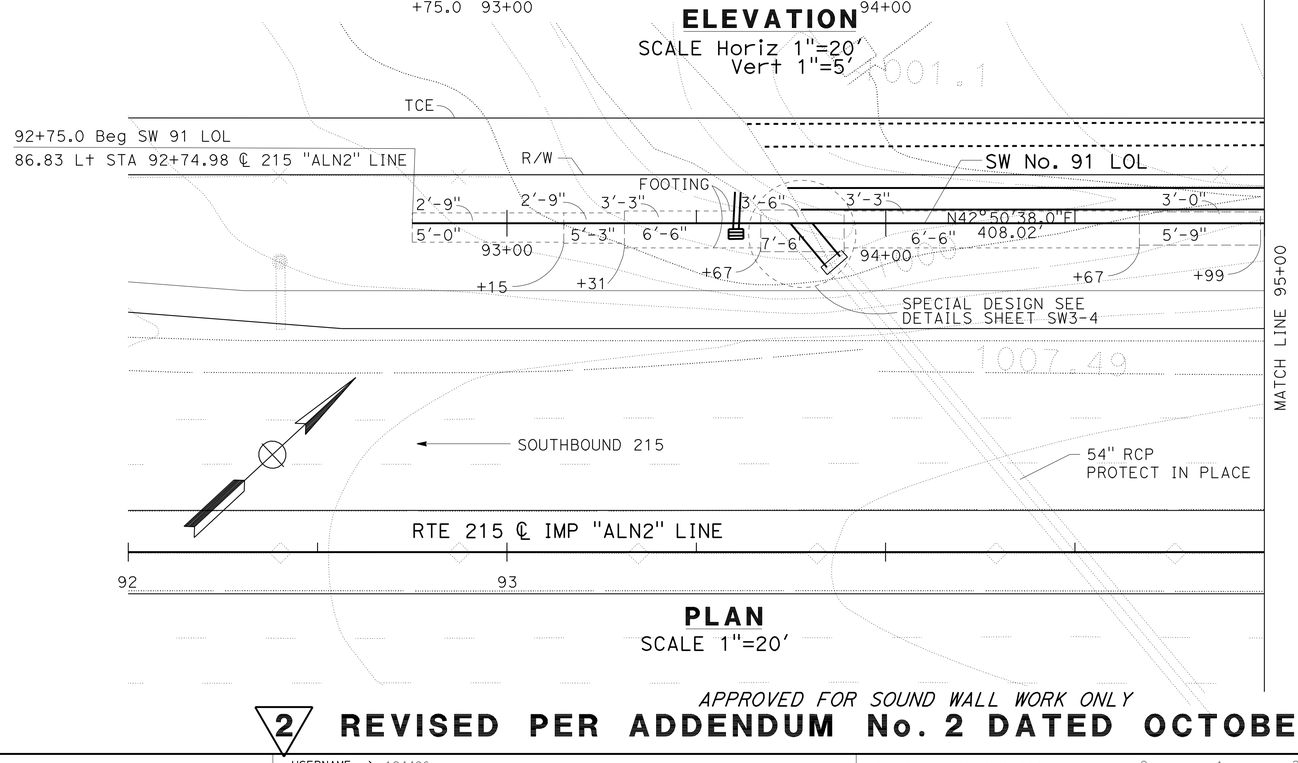

PLAN

SCALE 1"=20'

NOTE:

1. FOR SPECIAL DESIGN, SEE RETAINING WALL DETAIL SHEETS SW 3-4.
2. ARCHITECTURAL TREATMENT SHOULD EXTEND 6" BELOW FG.
3. FOR STRUCTURAL SECTIONS, SEE ROADWAY PLANS.
4. WATERSTOP IN EXPANSION JOINT SHALL BE EXTEND 6" INTO THE BARRIER.

QUANTITIES

STRUCTURAL CONCRETE (RETAINING WALL)	245.0	CY
BAR REINFORCING STEEL (RETAINING WALL)	22 805	LB
STRUCTURAL EXCAVATION (RETAINING WALL)	592.6	CY
STRUCTURAL BACKFILL (RETAINING WALL)	701.7	CY
PERVIOUS BACKFILL MATERIAL (RETAINING WALL)	30.6	CY
CONCRETE BARRIER (TYPE 736 Mod)	296.0	LF
CONCRETE BARRIER (TYPE 736SV)	112.0	LF
PLASTIC PIPE (N)	16.8	LF
WATERSTOP (N)	56.3	LF
16' CIDH CONCRETE PILING (SOUND WALL)	448.0	LF
SOUND WALL (BARRIER) (MASONRY BLOCK)	5439.0	SQFT
ARCHITECTURAL SURFACE (TEXTURED CONCRETE)	1719.0	SQFT

ELEVATION TABLE	
STATION	TOP OF RW
92+75.00	1003.92
93+00.00	1004.20
93+25.00	1004.46
93+50.00	1004.71
93+75.00	1004.96
94+00.00	1005.22
94+25.00	1005.49
94+50.00	1005.76
94+75.00	1005.98
95+00.00	1006.19
95+25.00	1006.38
95+50.00	1006.57
95+71.00	1006.67
95+75.00	1006.69
96+00.00	1006.81
96+25.00	1006.88
96+50.00	1006.94
96+83.00	1007.05

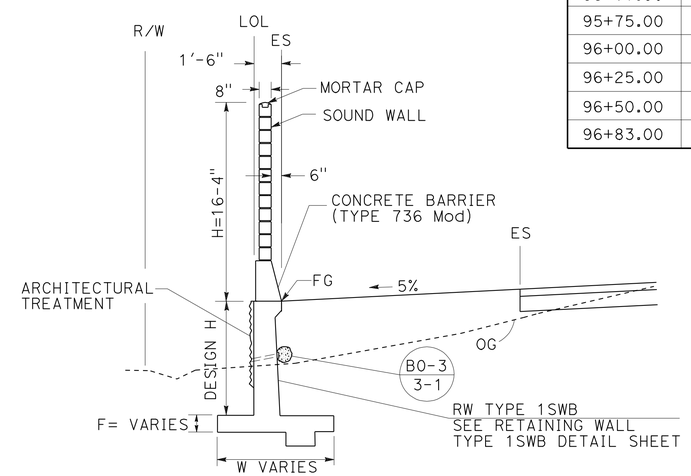

TYPICAL SECTION

NO SCALE

STA 92+75.00 TO STA 95+71.00

APPROVED FOR SOUND WALL WORK ONLY

2 REVISED PER ADDENDUM No. 2 DATED OCTOBER 5, 2012

SOUND WALL PLAN

SOUND WALL No. 91

SCALE AS SHOWN **SW3-1**

STATE OF CALIFORNIA - DEPARTMENT OF TRANSPORTATION
Caltrans® DESIGN
FUNCTIONAL SUPERVISOR BEN AMIRI
CALCULATED-DESIGNED BY MARK DE LA VEGA
CHECKED BY JUSTINE NIU
REVISED BY
DATE REVISED

LAST REVISION 03-07-12
DATE PLOTTED => 05-OCT-2012
TIME PLOTTED => 11:08

DIST	COUNTY	ROUTE	POST MILES TOTAL PROJECT	SHEET No.	TOTAL SHEETS
08	Riv,SBd	91,215	21.5/21.7, 43.2/45.2,0.0/5.1	1507	1743

REGISTERED CIVIL ENGINEER — DATE 4-06-12

4-16-12
PLANS APPROVAL DATE

REGISTERED PROFESSIONAL ENGINEER — LARRY WU No. C57035 Exp. 6-30-13 CIVIL — STATE OF CALIFORNIA

The State of California or its officers or agents shall not be responsible for the accuracy or completeness of electronic copies of this plan sheet.

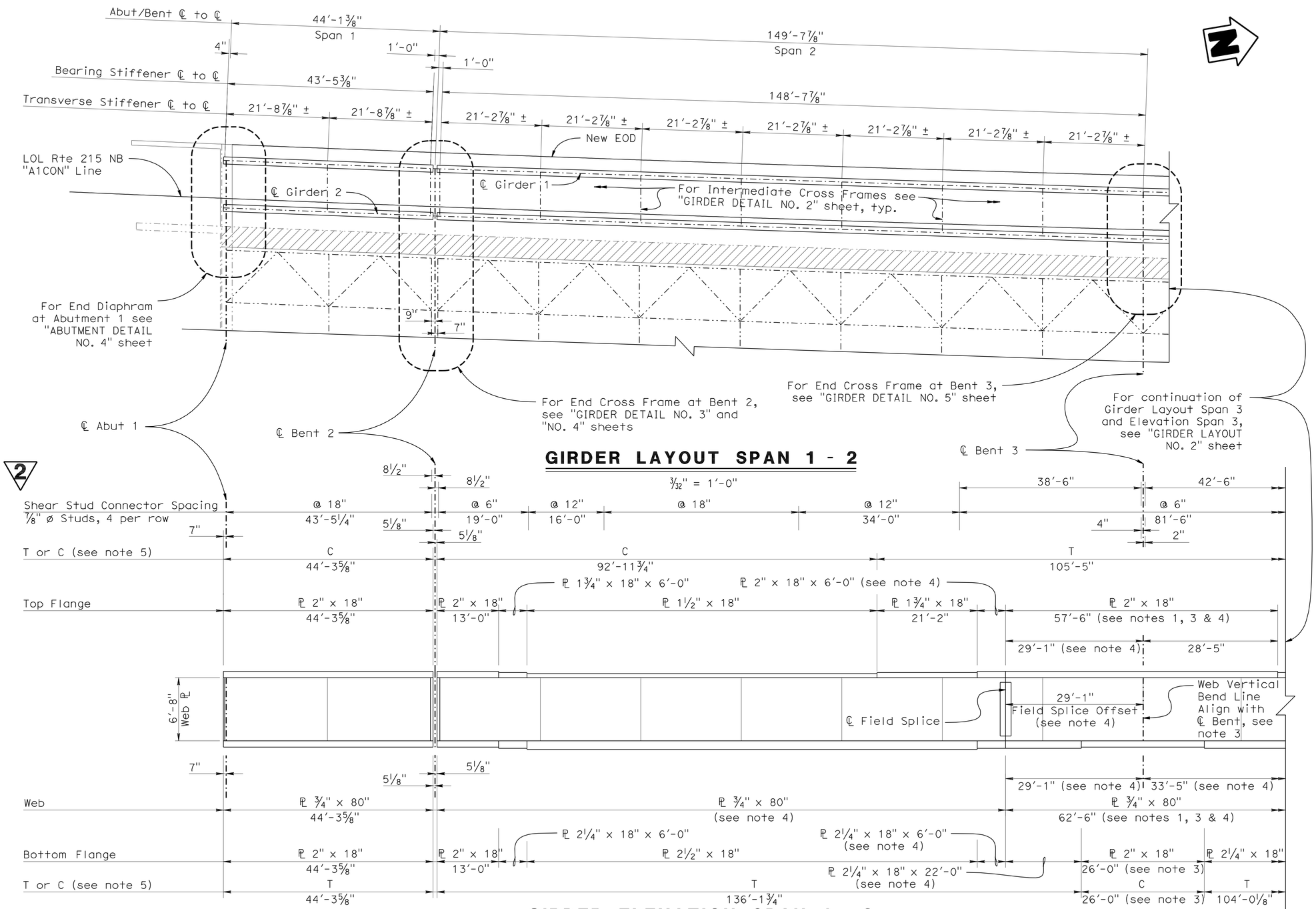

GIRDER LAYOUT SPAN 1 - 2

3/32" = 1′-0"

GIRDER ELEVATION SPAN 1 - 2

No Scale

NOTE:
THE CONTRACTOR SHALL VERIFY ALL CONTROLLING FIELD DIMENSIONS BEFORE ORDERING OR FABRICATING ANY MATERIAL.

LEGEND:

- Indicates new construction
- Indicates existing structure
- Indicates closure pour

NOTES:

1. All horizontal dimensions measured level, along vertical plane of straight Girder 1 spans, span per span. Girder 2 similar.
2. Camber in Girder Elevation not shown, see "CAMBER DIAGRAM" sheet for vertical camber in the flange and web of girders.
3. Top and Bottom Flange and Web continuous through ℄ Bents 3, 4 and 5. Vertical web bend follows angle of continuous adjacent spans at Bent ℄ 3, 4, and 5.
4. Distance to ℄ Splice, steel length to be reduced by half of gap width at Splice ℄, see "GIRDER DETAIL No. 13" sheet.
5. T = Main Tension Member, C = Main Compression Member
6. Girder Layout and Elevation Span 1-2 shown. For Girder Layout and Elevation Span 3, see "GIRDER LAYOUT NO. 2" sheet.
7. For Intermediate Cross Frames, see "GIRDER DETAILS NO. 2" sheet.
8. For Bent 2 and 6 End Cross Frames, see "GIRDER DETAILS NO. 3" and "NO. 4" sheet.
9. For Bent 3, 4 and 5 End Cross Frames, see "GIRDER DETAILS NO. 5" sheet.
10. For Splice Detail, see "GIRDER DETAILS NO. 13" sheet.
11. For End Diaphram at Abutment 1, see "ABUTMENT DETAILS NO. 4" sheet.

2 REVISED PER ADDENDUM No. 2 DATED OCTOBER 5, 2012

	BY	CHECKED
DESIGN	J. Szabo	R. Stiltz
DETAILS	J. Szabo	D. Wooten
QUANTITIES	J. Szabo	R. Stiltz

STATE OF CALIFORNIA
DEPARTMENT OF TRANSPORTATION

DIVISION OF ENGINEERING SERVICES
STRUCTURE DESIGN
DESIGN BRANCH 10

BRIDGE NO. 54-0482R
POST MILE 3.72

COLTON-LOMA LINDA OH RT (WIDEN)
GIRDER LAYOUT NO. 1

STRUCTURES DESIGN DETAIL SHEET (ENGLISH) (REV. 09-01-10)

ORIGINAL SCALE IN INCHES FOR REDUCED PLANS 0 1 2 3

UNIT: 3589
PROJECT NUMBER & PHASE: 0800000506
CONTRACT NO.: 08-0M9401

DISREGARD PRINTS BEARING EARLIER REVISION DATES

REVISION DATES

SHEET 23 OF 67

FILE => 540482rig_lo123.dgn

USERNAME => s124496 DATE PLOTTED => 05-OCT-2012 TIME PLOTTED => 11:07

DIST	COUNTY	ROUTE	POST MILES TOTAL PROJECT	SHEET No.	TOTAL SHEETS
08	Riv,SBd	91,215	21.5/21.7, 43.2/45.2,0.0/5.1	1508	1743

REGISTERED CIVIL ENGINEER 4-06-12 DATE

4-16-12
PLANS APPROVAL DATE

REGISTERED PROFESSIONAL ENGINEER LARRY WU No. C57035 Exp. 6-30-13 CIVIL STATE OF CALIFORNIA

The State of California or its officers or agents shall not be responsible for the accuracy or completeness of electronic copies of this plan sheet.

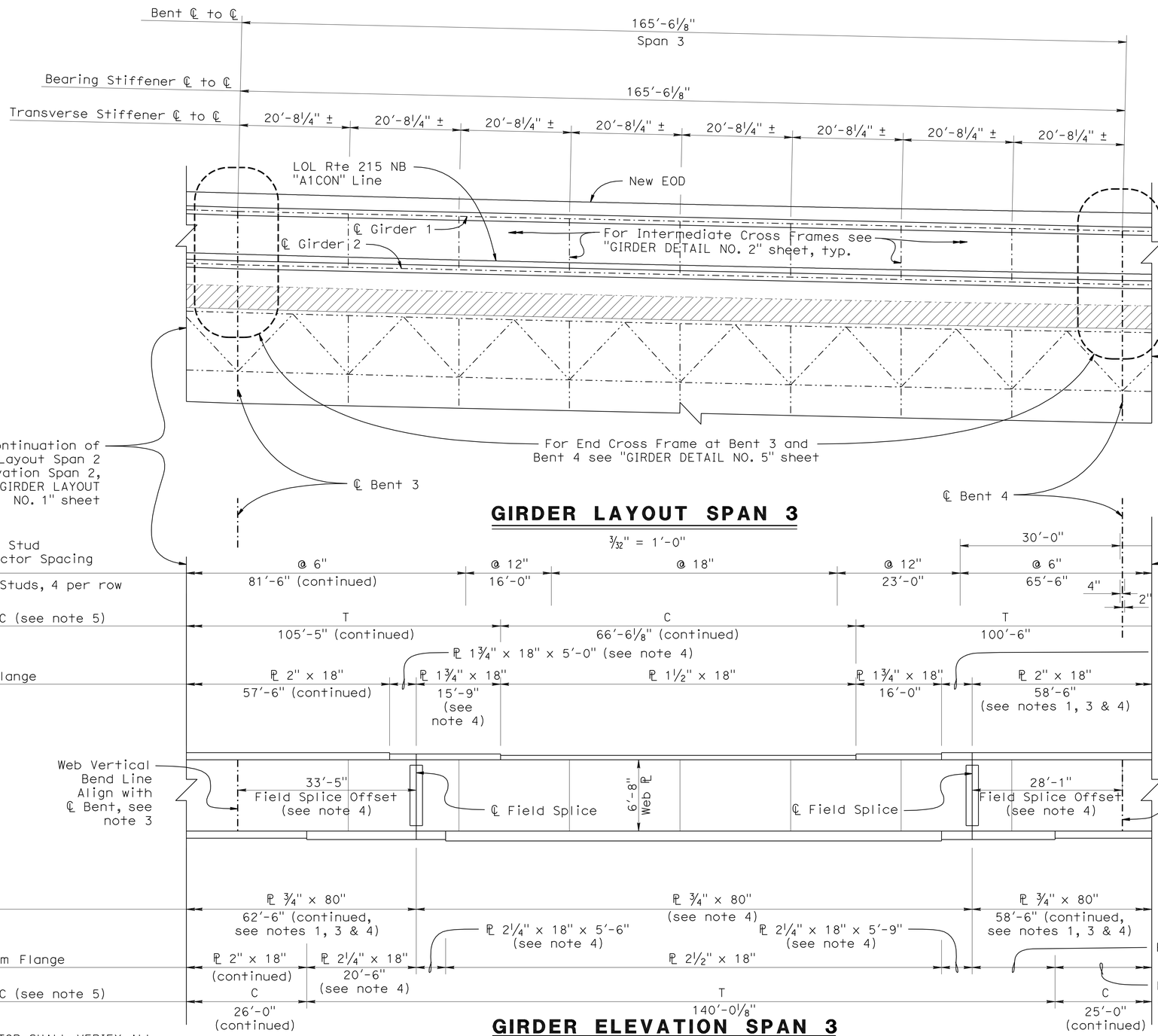

GIRDER LAYOUT SPAN 3

3/32" = 1'-0"

GIRDER ELEVATION SPAN 3

No Scale

NOTE:
THE CONTRACTOR SHALL VERIFY ALL CONTROLLING FIELD DIMENSIONS BEFORE ORDERING OR FABRICATING ANY MATERIAL.

LEGEND:

- Indicates new construction
- Indicates existing structure
- Indicates closure pour

NOTES:

1. All horizontal dimensions measured level, along vertical plane of straight Girder 1 spans, span per span. Girder 2 similar.
2. Camber in Girder Elevation not shown, see "CAMBER DIAGRAM" sheet for vertical camber in the flange and web of girders.
3. Top and Bottom Flange and Web continuous through ℄ Bents 3, 4 and 5. Vertical web bend follows angle of continuous adjacent spans at Bent ℄ 3, 4, and 5.
4. Distance to ℄ Splice, steel length to be reduced by half of gap width at Splice ℄, see "GIRDER DETAIL No. 13" sheet.
5. T = Main Tension Member, C = Main Compression Member
6. Girder Layout and Elevation Span 3 shown. For Girder Layout and Elevation Span 1-2, see "GIRDER LAYOUT NO. 1" sheet. For Girder Layout and Elevation Span 4, see "GIRDER LAYOUT NO. 3" sheet.
7. For Intermediate Cross Frames, see "GIRDER DETAILS NO. 2" sheet.
8. For Bent 3, 4 and 5 End Cross Frames, see "GIRDER DETAILS NO. 5" sheet.
9. For Splice Detail, see "GIRDER DETAILS NO. 13" sheet.

2 REVISED PER ADDENDUM No. 2 DATED OCTOBER 5, 2012

	BY	CHECKED
DESIGN	J. Szabo	R. Stiltz
DETAILS	J. Szabo	D. Wooten
QUANTITIES	J. Szabo	R. Stiltz

STATE OF CALIFORNIA DEPARTMENT OF TRANSPORTATION

DIVISION OF ENGINEERING SERVICES STRUCTURE DESIGN DESIGN BRANCH 10

BRIDGE NO. 54-0482R
POST MILE 3.72

COLTON-LOMA LINDA OH RT (WIDEN)
GIRDER LAYOUT NO. 2

STRUCTURES DESIGN DETAIL SHEET (ENGLISH) (REV. 09-01-10)

ORIGINAL SCALE IN INCHES FOR REDUCED PLANS 0 1 2 3

UNIT: 3589
PROJECT NUMBER & PHASE: 0800000506
CONTRACT NO.: 08-0M9401

DISREGARD PRINTS BEARING EARLIER REVISION DATES

REVISION DATES

SHEET 24 OF 67

FILE => 540482rig_lo124.dgn

USERNAME => s124496 DATE PLOTTED => 05-OCT-2012 TIME PLOTTED => 11:07

DIST	COUNTY	ROUTE	POST MILES TOTAL PROJECT	SHEET No.	TOTAL SHEETS
08	Riv,SBd	91,215	21.5/21.7, 43.2/45.2,0.0/5.1	1509	1743

REGISTERED CIVIL ENGINEER 4-06-12 DATE

4-16-12
PLANS APPROVAL DATE

REGISTERED PROFESSIONAL ENGINEER LARRY WU No. C57035 Exp. 6-30-13 CIVIL STATE OF CALIFORNIA

The State of California or its officers or agents shall not be responsible for the accuracy or completeness of electronic copies of this plan sheet.

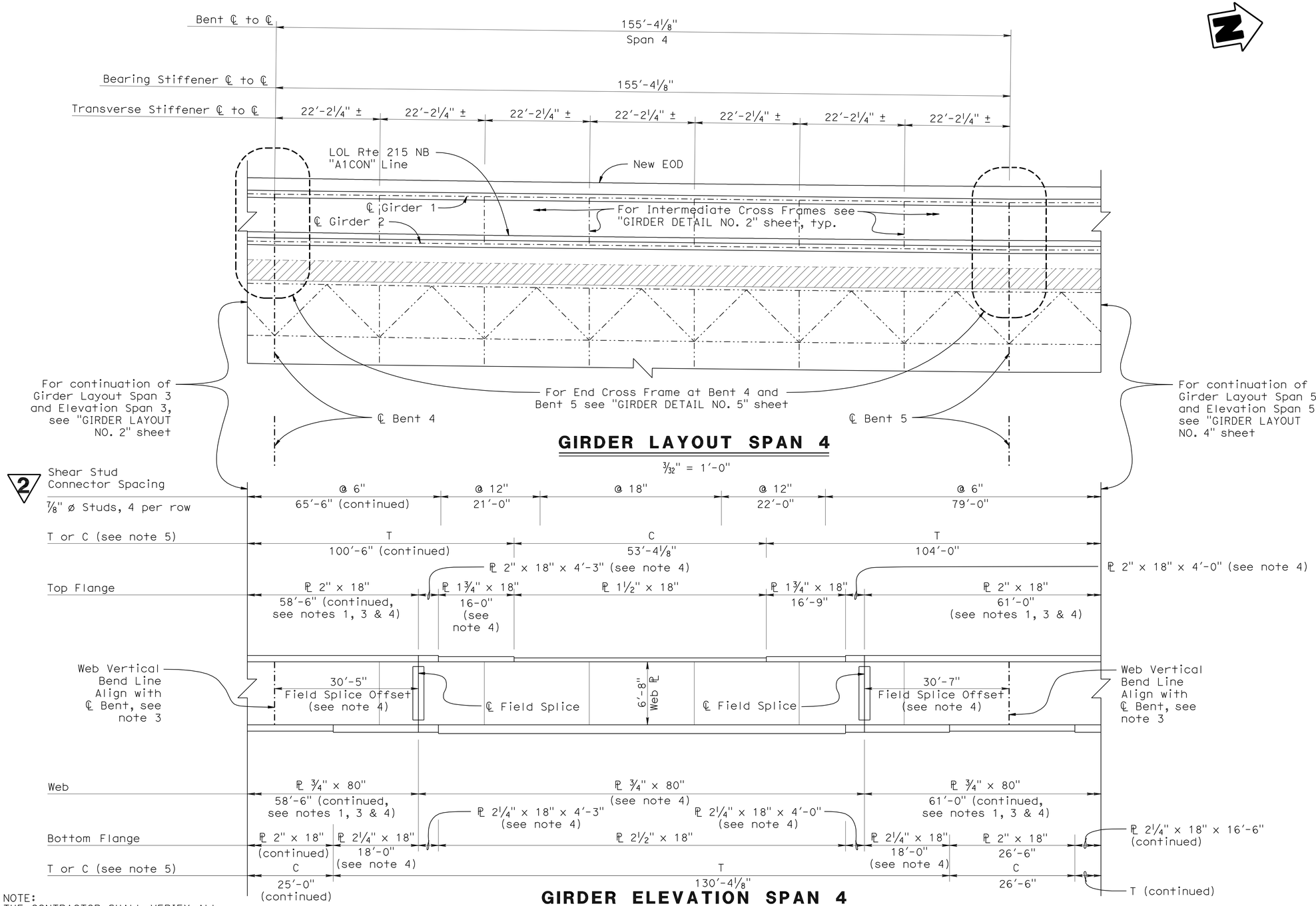

GIRDER LAYOUT SPAN 4

3/32" = 1'-0"

GIRDER ELEVATION SPAN 4

No Scale

NOTE:
THE CONTRACTOR SHALL VERIFY ALL CONTROLLING FIELD DIMENSIONS BEFORE ORDERING OR FABRICATING ANY MATERIAL.

LEGEND:

- Indicates new construction
- Indicates existing structure
- Indicates closure pour

NOTES:

1. All horizontal dimensions measured level, along vertical plane of straight Girder 1 spans, span per span. Girder 2 similar.
2. Camber in Girder Elevation not shown, see "CAMBER DIAGRAM" sheet for vertical camber in the flange and web of girders.
3. Top and Bottom Flange and Web continuous through ℄ Bents 3, 4 and 5. Vertical web bend follows angle of continuous adjacent spans at Bent ℄ 3, 4, and 5.
4. Distance to ℄ Splice, steel length to be reduced by half of gap width at Splice ℄, see "GIRDER DETAIL No. 13" sheet.
5. T = Main Tension Member
   C = Main Compression Member
6. Girder Layout and Elevation Span 4 shown. For Girder Layout and Elevation Span 3, see "GIRDER LAYOUT NO. 2" sheet. For Girder Layout and Elevation Span 5-6, see "GIRDER LAYOUT NO. 4" sheet.
7. For Intermediate Cross Frames, see "GIRDER DETAILS NO. 2" sheet.
8. For Bent 3, 4 and 5 End Cross Frames, see "GIRDER DETAILS NO. 5" sheet.
9. For Splice Detail, see "GIRDER DETAILS NO. 13" sheet.

2 REVISED PER ADDENDUM No. 2 DATED OCTOBER 5, 2012

	BY	CHECKED
DESIGN	J. Szabo	R. Stiltz
DETAILS	J. Szabo	D. Wooten
QUANTITIES	J. Szabo	R. Stiltz

STATE OF CALIFORNIA
DEPARTMENT OF TRANSPORTATION

DIVISION OF ENGINEERING SERVICES
STRUCTURE DESIGN
DESIGN BRANCH 10

BRIDGE NO. 54-0482R
POST MILE 3.72

COLTON-LOMA LINDA OH RT (WIDEN)
GIRDER LAYOUT NO. 3

STRUCTURES DESIGN DETAIL SHEET (ENGLISH) (REV. 09-01-10)

ORIGINAL SCALE IN INCHES FOR REDUCED PLANS 0 1 2 3

UNIT: 3589
PROJECT NUMBER & PHASE: 0800000506
CONTRACT NO.: 08-0M9401

DISREGARD PRINTS BEARING EARLIER REVISION DATES

REVISION DATES

SHEET 25 OF 67

FILE => 540482rig_lo125.dgn

USERNAME => s124496 DATE PLOTTED => 05-OCT-2012 TIME PLOTTED => 11:07

DIST	COUNTY	ROUTE	POST MILES TOTAL PROJECT	SHEET No.	TOTAL SHEETS
08	Riv,SBd	91,215	21.5/21.7, 43.2/45.2,0.0/5.1	1510	1743

REGISTERED CIVIL ENGINEER 4-06-12 DATE

4-16-12
PLANS APPROVAL DATE

REGISTERED PROFESSIONAL ENGINEER LARRY WU No. C57035 Exp. 6-30-13 CIVIL STATE OF CALIFORNIA

The State of California or its officers or agents shall not be responsible for the accuracy or completeness of electronic copies of this plan sheet.

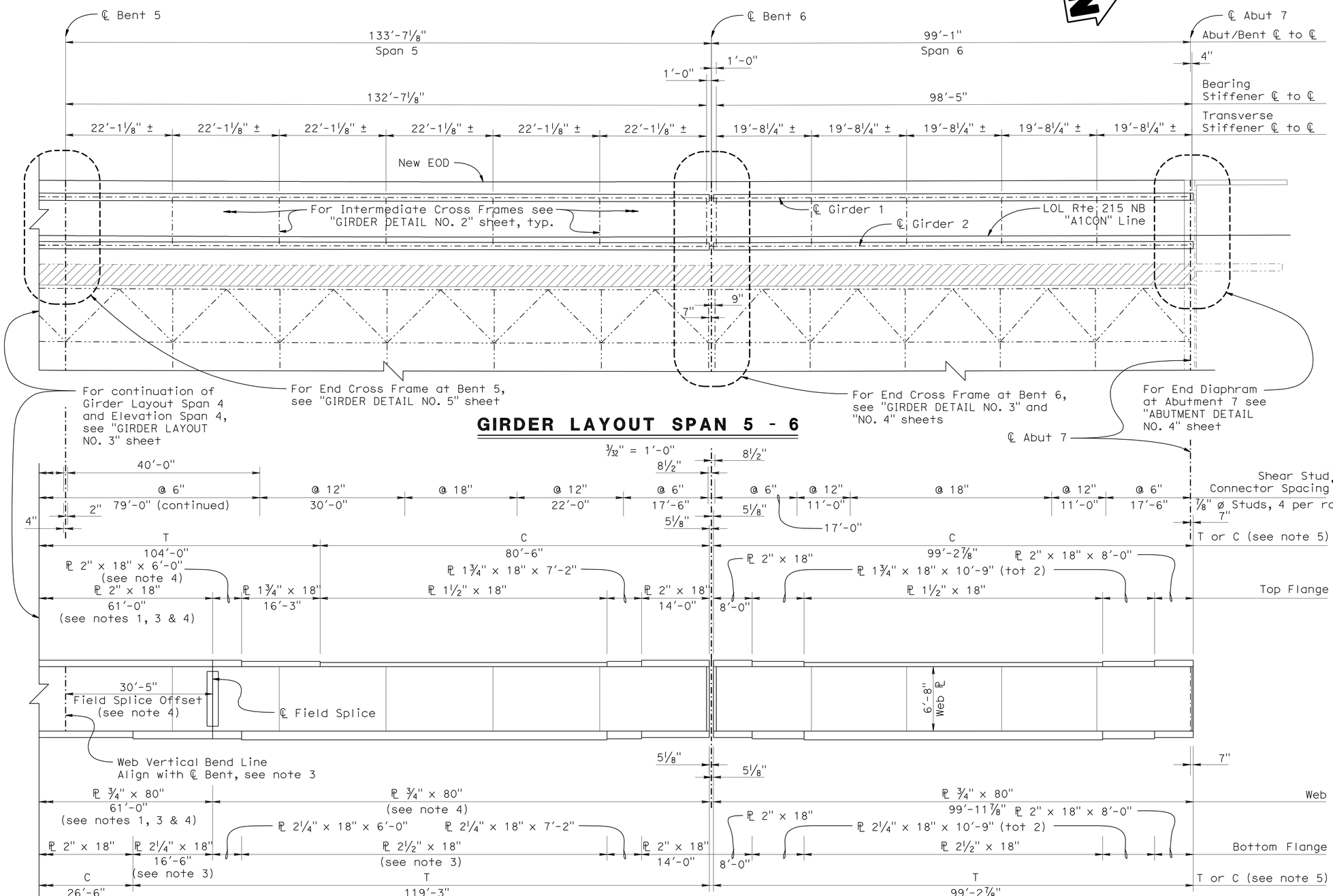

GIRDER LAYOUT SPAN 5 - 6

GIRDER ELEVATION SPAN 5 - 6

No Scale

NOTE:
THE CONTRACTOR SHALL VERIFY ALL CONTROLLING FIELD DIMENSIONS BEFORE ORDERING OR FABRICATING ANY MATERIAL.

LEGEND:

- Indicates new construction
- Indicates existing structure
- Indicates closure pour

NOTES:

1. All horizontal dimensions measured level, along vertical plane of straight Girder 1 spans, span per span. Girder 2 similar.
2. Camber in Girder Elevation not shown, see "CAMBER DIAGRAM" sheet for vertical camber in the flange and web of girders.
3. Top and Bottom Flange and Web continuous through ℄ Bents 3, 4 and 5. Vertical web bend follows angle of continuous adjacent spans at Bent ℄ 3, 4, and 5.
4. Distance to ℄ Splice, steel length to be reduced by half of gap width at Splice ℄, see "GIRDER DETAIL No. 13" sheet.
5. T = Main Tension Member, C = Main Compression Member
6. Girder Layout and Elevation Span 5-6 shown. For Girder Layout and Elevation Span 4, see "GIRDER LAYOUT NO. 3" sheet.
7. For Intermediate Cross Frames, see "GIRDER DETAILS NO. 2" sheet.
8. For Bent 2 and 6 End Cross Frames, see "GIRDER DETAILS NO. 3" and "NO. 4" sheet.
9. For Bent 3, 4 and 5 End Cross Frames, see "GIRDER DETAILS NO. 5" sheet.
10. For Splice Detail, see "GIRDER DETAILS NO. 13" sheet.
11. For End Diaphram at Abut 7, see "ABUTMENT DETAILS NO. 4" sheet.

2 REVISED PER ADDENDUM No. 2 DATED OCTOBER 5, 2012

	BY	CHECKED
DESIGN	J. Szabo	R. Stiltz
DETAILS	J. Szabo	D. Wooten
QUANTITIES	J. Szabo	R. Stiltz

STATE OF CALIFORNIA
DEPARTMENT OF TRANSPORTATION

DIVISION OF ENGINEERING SERVICES
STRUCTURE DESIGN
DESIGN BRANCH 10

BRIDGE NO. 54-0482R
POST MILE 3.72

COLTON-LOMA LINDA OH RT (WIDEN)
GIRDER LAYOUT NO. 4

STRUCTURES DESIGN DETAIL SHEET (ENGLISH) (REV. 09-01-10)

ORIGINAL SCALE IN INCHES FOR REDUCED PLANS 0 1 2 3

UNIT: 3589
PROJECT NUMBER & PHASE: 0800000506
CONTRACT NO.: 08-0M9401

DISREGARD PRINTS BEARING EARLIER REVISION DATES

REVISION DATES

SHEET 26 OF 67

FILE => 540482rig_lo126.dgn

USERNAME => s124496 DATE PLOTTED => 05-OCT-2012 TIME PLOTTED => 11:07

DIST	COUNTY	ROUTE	POST MILES TOTAL PROJECT	SHEET No.	TOTAL SHEETS
08	Riv,SBd	91,215	21.5/21.7, 43.2/45.2,0.0/5.1	1541	1743

REGISTERED CIVIL ENGINEER 4-06-12 DATE

4-16-12
PLANS APPROVAL DATE

REGISTERED PROFESSIONAL ENGINEER LARRY WU No. C57035 Exp. 6-30-13 CIVIL STATE OF CALIFORNIA

The State of California or its officers or agents shall not be responsible for the accuracy or completeness of electronic copies of this plan sheet.

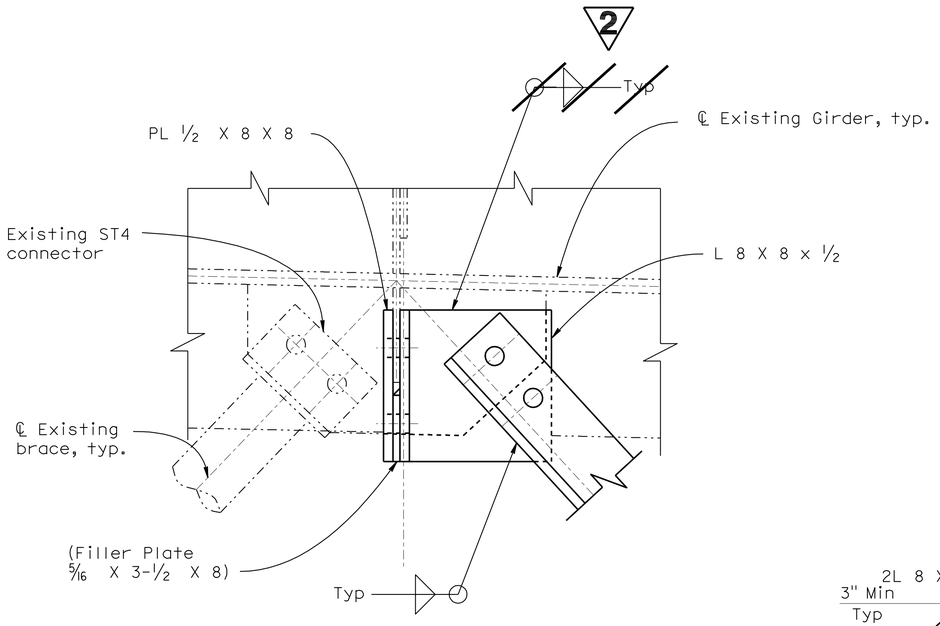

Note: Similar to Detail N, unless shown otherwise

DETAIL "M"

3" = 1'-0"

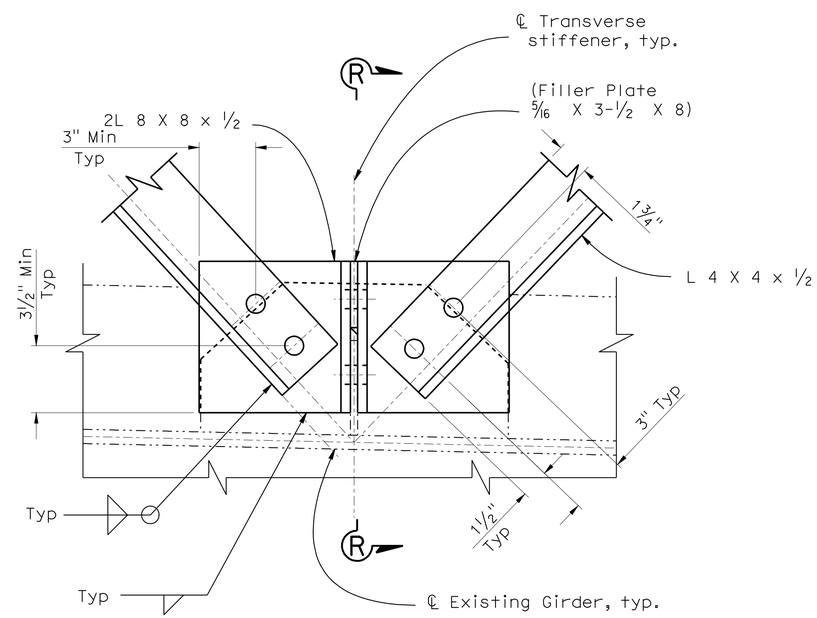

DETAIL "N"

3" = 1'-0"

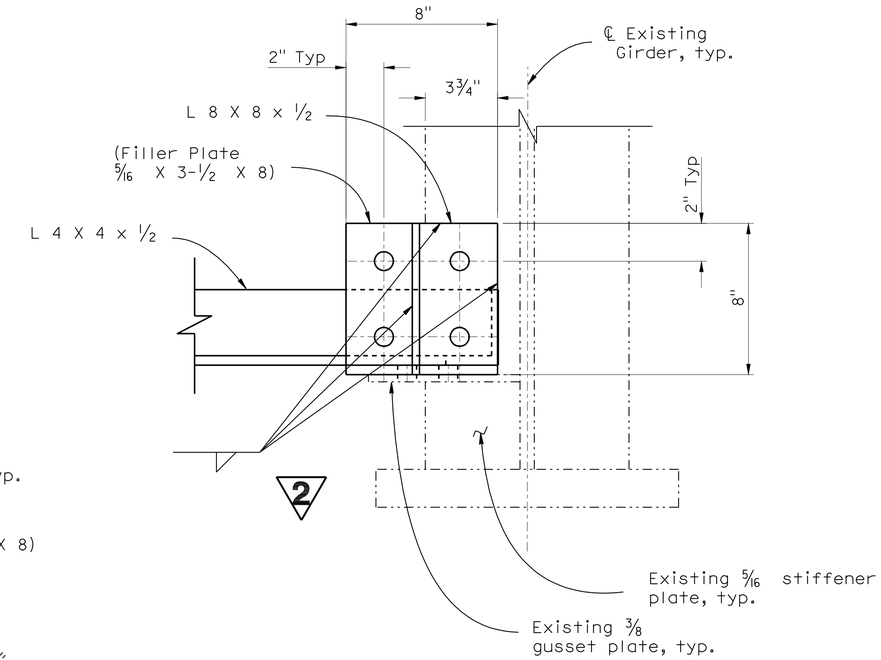

SECTION R-R

3" = 1'-0"

Notes:

1. ⅞" A325X bolts, typ. Match centerline of new bolts to existing pipe centerline
2. Fillet weld cut or drilled edges of existing plates to attached new plates

Legend:

——— Indicates new steel members, plates & welded bolts

-·-·-·- Indicates existing structure

NOTE:
THE CONTRACTOR SHALL VERIFY ALL CONTROLLING FIELD DIMENSIONS BEFORE ORDERING OR FABRICATING ANY MATERIAL.

2 REVISED PER ADDENDUM No. 2 DATED OCTOBER 5, 2012

	BY	CHECKED
DESIGN	J. Szabo	R. Stiltz
DETAILS	J.Szabo	D. Wooten
QUANTITIES	J. Szabo	R. Stiltz

STATE OF CALIFORNIA DEPARTMENT OF TRANSPORTATION

DIVISION OF ENGINEERING SERVICES STRUCTURE DESIGN DESIGN BRANCH 10

BRIDGE NO. 54-0482R
POST MILE 3.72

COLTON-LOMA LINDA OH RT (WIDEN)
RETROFIT DETAIL NO. 7

STRUCTURES DESIGN DETAIL SHEET (ENGLISH) (REV. 09-01-10)

ORIGINAL SCALE IN INCHES FOR REDUCED PLANS 0 1 2 3

UNIT: 3589
PROJECT NUMBER & PHASE: 0800000506
CONTRACT NO.: 08-0M9401

DISREGARD PRINTS BEARING EARLIER REVISION DATES

REVISION DATES

SHEET 57 OF 67

FILE => 540482ryrdt757.add

USERNAME => s124496 DATE PLOTTED => 05-OCT-2012 TIME PLOTTED => 11:07

DIST	COUNTY	ROUTE	POST MILES TOTAL PROJECT	SHEET No.	TOTAL SHEETS
08	Riv,SBd	91,215	21.5/21.7, 43.2/45.2,0.0/5.1	1637	1743

REGISTERED CIVIL ENGINEER — DATE 4-06-12

4-16-12
PLANS APPROVAL DATE

REGISTERED PROFESSIONAL ENGINEER — LARRY WU — No. C57035 — Exp. 6-30-13 — CIVIL — STATE OF CALIFORNIA

The State of California or its officers or agents shall not be responsible for the accuracy or completeness of electronic copies of this plan sheet.

1

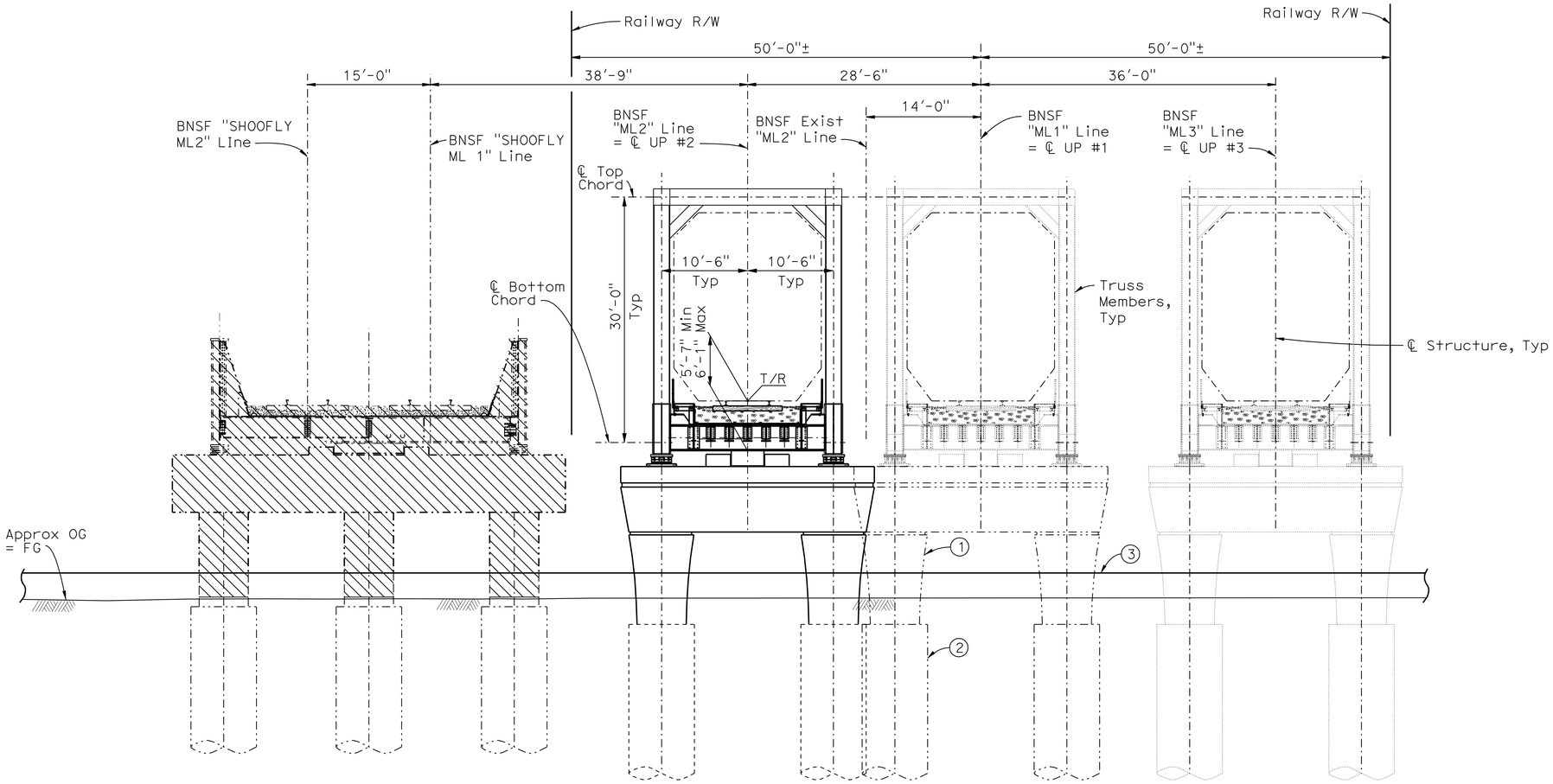

TYPICAL SECTION

1/8" = 1'-0"

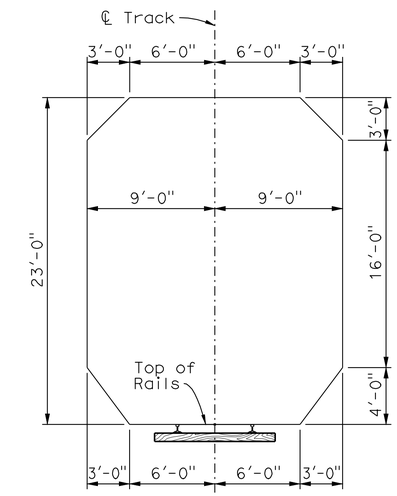

MINIMUM RAILWAY BRIDGE CLEARANCES

3/16" = 1'-0"

PILE DATA TABLE

Location	Pile Type	Design Loading (WSD) (kips)		Nominal Resistance (kips)		Cut-off Elevations (ft)	Design Tip Elevation (ft)	Specified Tip Elevation (ft)
		Compression	Tension	Compression	Tension			
Abut 1	24" CIDH	200	0	200	0	924.0	894.0 (a)	894.0
Bent 2	96" CICH	2400	0	2400	0	915.0	822.0 (a)	822.0
Abut 3	24"CIDH	200	0	200	0	924.9	887.0 (a)	887.0

NOTE: Design tip elevations are controlled by the following demands: (a) Compression

QUANTITIES

BRIDGE REMOVAL, LOCATION C	LUMP	SUM
BRIDGE REMOVAL, LOCATION E	LUMP	SUM
STRUCTURE EXCAVATION (BRIDGE)	625	CY
STRUCTURE BACKFILL (BRIDGE)	271	CY
PERVIOUS BACKFILL MATERIAL	21	CY
24" CAST-IN-DRILLED-HOLE CONCRETE PILING	1,222	LF
96" CAST-IN-DRILLED-HOLE CONCRETE PILING	186	LF
STRUCTURAL CONCRETE, BRIDGE FOOTING	100	CY
STRUCTURAL CONCRETE, BRIDGE	288	CY
BEARING	8	EA
BAR REINFORCING STEEL (BRIDGE)	270,738	LB
WATERPROOFING AND COVER	6,859	SQFT
FURNISH STRUCTURAL STEEL (BRIDGE)	~~2,060,397~~	LB
ERECT STRUCTURAL STEEL (BRIDGE)	~~2,060,397~~	LB
CLEAN AND PAINT STRUCTURAL STEEL	LUMP	SUM
MISCELLANEOUS METAL (BRIDGE)	27,955	LB
BRIDGE DECK DRAINAGE SYSTEM	2,722	LB
PIPE HANDRAILING	812	LF

2 — 1,918,493

LEGEND:

- —— Indicates new construction
- —·—· Indicates existing structure
- ▨ Indicates bridge removal after construction of Replacement Bridges

NOTES:

1. 6'-0" Dia Column
2. 8'-0" Dia CIDH Shaft
3. Concrete Barrier Type 60E, see "Roadway Plans"

ABBREVIATIONS:

BNSF	Burlington Northern and Santa Fe Railway (Bridge Owner)
UP	Underpass
R/W	Right of Way
T/R	Top of Rail

NOTE:
THE CONTRACTOR SHALL VERIFY ALL CONTROLLING FIELD DIMENSIONS BEFORE ORDERING OR FABRICATING ANY MATERIAL.

1 **REVISED PER ADDENDUM No. 1 DATED OCTOBER 3, 2012**

2 **REVISED PER ADDENDUM No. 2 DATED OCTOBER 5, 2012**

DANIEL T. ADAMS
DESIGN ENGINEER

	BY	CHECKED
DESIGN	L. Wu	B. Addlespurger
DETAILS	G. Hallstrom/Y. Tang	B. Addlespurger
QUANTITIES	T. Sanderson	A. McPhee

LFD = RC
ASD = STEEL
LIVE LOADING: AREMA COOPER E-80 AND ALTERNATIVE LIVE LOAD

LAYOUT — BY L. Wu — CHECKED B. Addlespurger
SPECIFICATIONS — BY J. Corrado — PLANS AND SPECS COMPARED J. Corrado

ORIGINAL SCALE IN INCHES FOR REDUCED PLANS 0 1 2 3

STATE OF CALIFORNIA
DEPARTMENT OF TRANSPORTATION

DIVISION OF ENGINEERING SERVICES
STRUCTURE DESIGN
DESIGN BRANCH 10

BRIDGE NO. 54-1305
R.R. MILE POST 5.89
LINE SEG. 7602

HIGHGROVE UNDERPASS #2
GENERAL PLAN NO. 2

UNIT: 3589
PROJECT NUMBER & PHASE: 08000005061
CONTRACT NO.: 08-0M9401

DISREGARD PRINTS BEARING EARLIER REVISION DATES

REVISION DATES: 2-09-11 — 9-21-12 — 3-28-12

SHEET 2 OF 42

STRUCTURES DESIGN GENERAL PLAN SHEET (ENGLISH) (REV.09-01-10)

FILE => 541305agp02.add

USERNAME => s124496 DATE PLOTTED => 05-OCT-2012 TIME PLOTTED => 11:07