Dist	COUNTY	ROUTE	POST MILES TOTAL PROJECT	SHEET No.	TOTAL SHEETS
08	Riv	74	6.9/10.2	1	28

INDEX OF PLANS

SHEET No.	DESCRIPTION
1	TITLE AND LOCATION MAP
2	TYPICAL CROSS SECTIONS
3-14	LAYOUTS
15	TEMPORARY WATER POLLUTION CONTROL QUANTITIES
16	CONSTRUCTION AREA SIGNS
17	PAVEMENT DELINEATION QUANTITIES
18	SUMMARY OF QUANTITIES
19-28	REVISED STANDARD PLANS

THE STANDARD PLANS LIST APPLICABLE TO THIS CONTRACT IS INCLUDED IN THE NOTICE TO BIDDERS AND SPECIAL PROVISIONS BOOK.

STATE OF CALIFORNIA

DEPARTMENT OF TRANSPORTATION

PROJECT PLANS FOR CONSTRUCTION ON

STATE HIGHWAY

IN RIVERSIDE COUNTY
NEAR LAKE ELSINORE
FROM 0.3 MILE EAST OF EL CARISO CAMP GROUND ROAD TO 1.6 MILES WEST OF GRAND AVENUE

TO BE SUPPLEMENTED BY STANDARD PLANS DATED MAY 2010

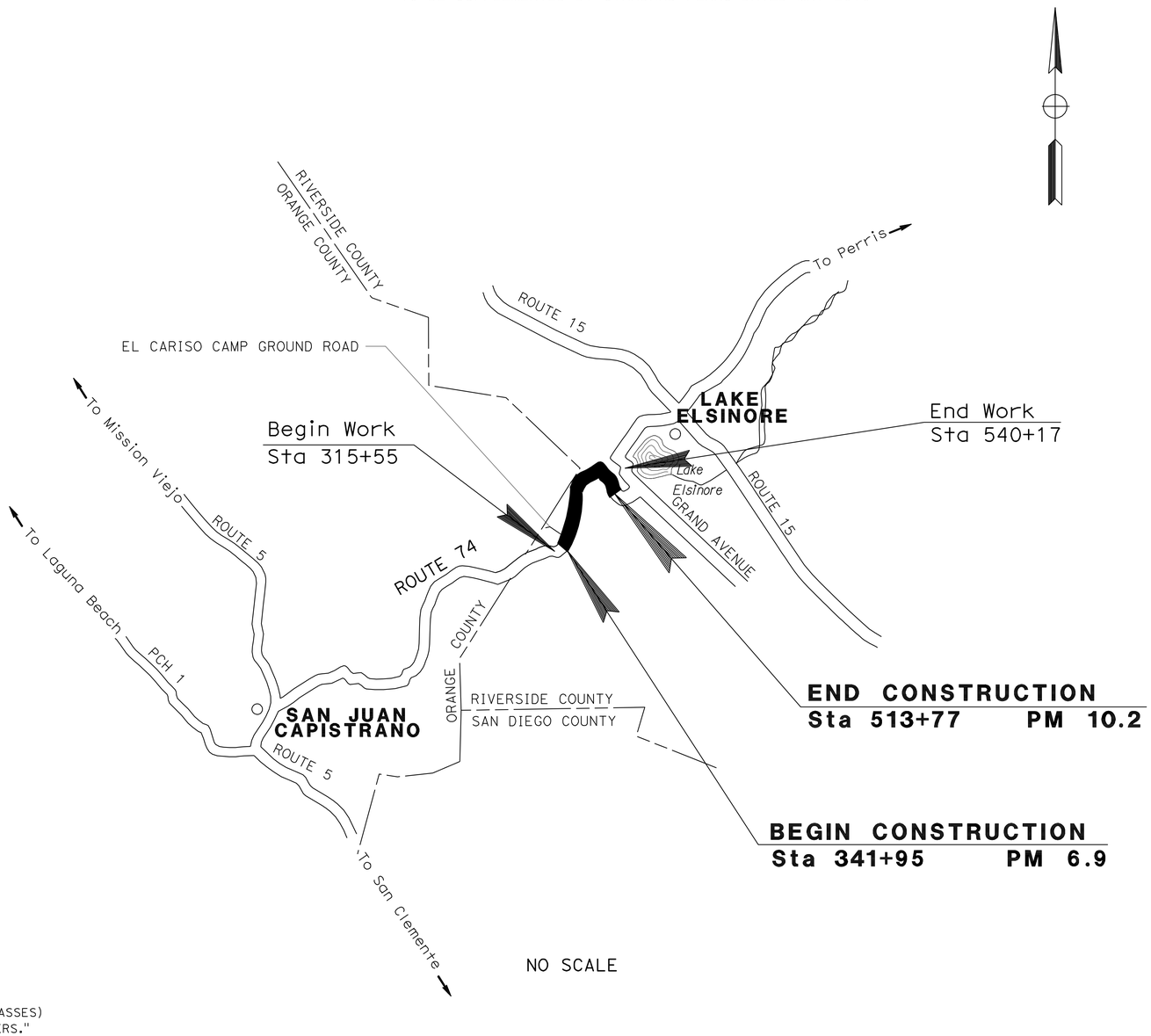

LOCATION MAP

PROJECT MANAGER: HONG VAN

DESIGN ENGINEER: GEORGE MORHIG

George Morhig 9-16-13
PROJECT ENGINEER DATE
REGISTERED CIVIL ENGINEER

September 16, 2013
PLANS APPROVAL DATE

REGISTERED PROFESSIONAL ENGINEER GEORGE MORHIG No. 50349 Exp. 6/30/15 CIVIL STATE OF CALIFORNIA

THE STATE OF CALIFORNIA OR ITS OFFICERS OR AGENTS SHALL NOT BE RESPONSIBLE FOR THE ACCURACY OR COMPLETENESS OF SCANNED COPIES OF THIS PLAN SHEET.

THE CONTRACTOR SHALL POSSESS THE CLASS (OR CLASSES) OF LICENSE AS SPECIFIED IN THE "NOTICE TO BIDDERS."

CONTRACT No.	08-0M4204
PROJECT ID	0800020127

LAST REVISION 09-16-13 DATE PLOTTED => 16-SEP-2013 TIME PLOTTED => 10:32

Dist	COUNTY	ROUTE	POST MILES TOTAL PROJECT	SHEET No.	TOTAL SHEETS
08	Riv	74	6.9/10.2	2	28

REGISTERED CIVIL ENGINEER 9-16-13 DATE

9-16-13
PLANS APPROVAL DATE

REGISTERED PROFESSIONAL ENGINEER GEORGE MORHIG No. 50349 Exp. 6/30/15 CIVIL STATE OF CALIFORNIA

THE STATE OF CALIFORNIA OR ITS OFFICERS OR AGENTS SHALL NOT BE RESPONSIBLE FOR THE ACCURACY OR COMPLETENESS OF SCANNED COPIES OF THIS PLAN SHEET.

NOTES:

1. FOR LIMITS OF REMOVED AC DIKE, LOCATIONS AND TYPE OF HMA DIKE AND LOCATIONS OF MGS, SEE LAYOUT SHEETS.
2. FOR GUARD RAIL DELINEATOR DETAILS AND SPACING, SEE SHEET PDQ-1.

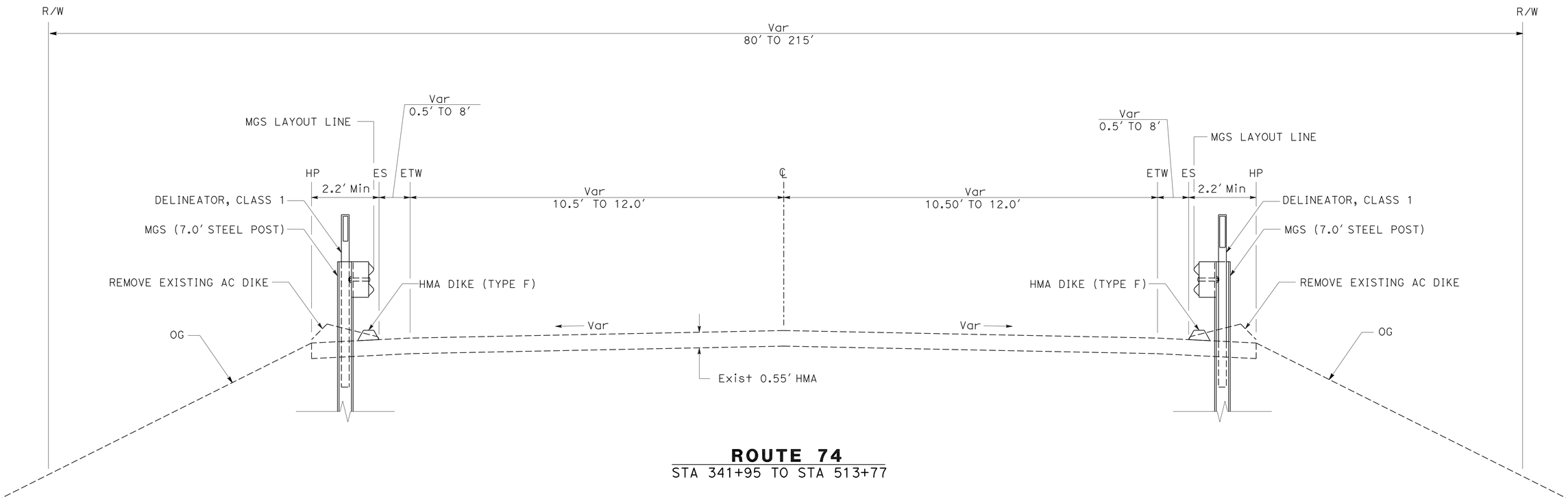

ROUTE 74
STA 341+95 TO STA 513+77

TYPICAL CROSS SECTIONS
NO SCALE

X-1

STATE OF CALIFORNIA - DEPARTMENT OF TRANSPORTATION
Caltrans DESIGN

FUNCTIONAL SUPERVISOR: GEORGE MORHIG
CALCULATED-DESIGNED BY: JIM KENNEDY
CHECKED BY: GEORGE MORHIG
REVISED BY
DATE REVISED

LAST REVISION 09-16-13 | DATE PLOTTED => 16-SEP-2013 | TIME PLOTTED => 10:32

Dist	COUNTY	ROUTE	POST MILES TOTAL PROJECT	SHEET No.	TOTAL SHEETS
08	Riv	74	6.9/10.2	3	28

REGISTERED CIVIL ENGINEER 9-16-13 DATE

9-16-13
PLANS APPROVAL DATE

REGISTERED PROFESSIONAL ENGINEER GEORGE MORHIG No. 50349 Exp. 6/30/15 CIVIL STATE OF CALIFORNIA

THE STATE OF CALIFORNIA OR ITS OFFICERS OR AGENTS SHALL NOT BE RESPONSIBLE FOR THE ACCURACY OR COMPLETENESS OF SCANNED COPIES OF THIS PLAN SHEET.

NOTES:

1. FOR ACCURATE RIGHT OF WAY DATA, CONTACT RIGHT OF WAY ENGINEERING AT THE DISTRICT OFFICE.
2. EXACT MGS LOCATIONS TO BE DETERMINED BY THE ENGINEER.
3. REMOVAL OF EXISTING DIKE SHOULD BE STOPPED AT THE LOCAL DEPRESSIONS OF EXISTING OVERSIDE DRAINS AND DROP INLETS AS SHOWN ON THE PLANS. NEW DIKE SHOULD JOIN AND MATCH THE EXISTING LOCAL DEPRESSION WITH A 5′ TRANSITION.
4. METAL BEAM GUARD RAIL WITH A RADIUS OF LESS THAN 150′ MUST BE SHAPED IN THE SHOP.
5. FLOWLINE OF NEW HMA DIKE SHOULD BE THE SAME LOCATION AS THE EXISTING DIKE FLOWLINE.
6. THE FACE OF MGS SHOULD BE ALONG THE EXISTING EDGE OF SHOULDER AS PER REVISED STANDARD RSP PLAN A77N4, OR OTHERWISE NOTED.
7. WHERE EXISTING MBGR IS CONNECTING WITH THE NEW MGS, USE TRANSITION DETAIL PER REVISED STANDARD RSP PLAN A77U5.

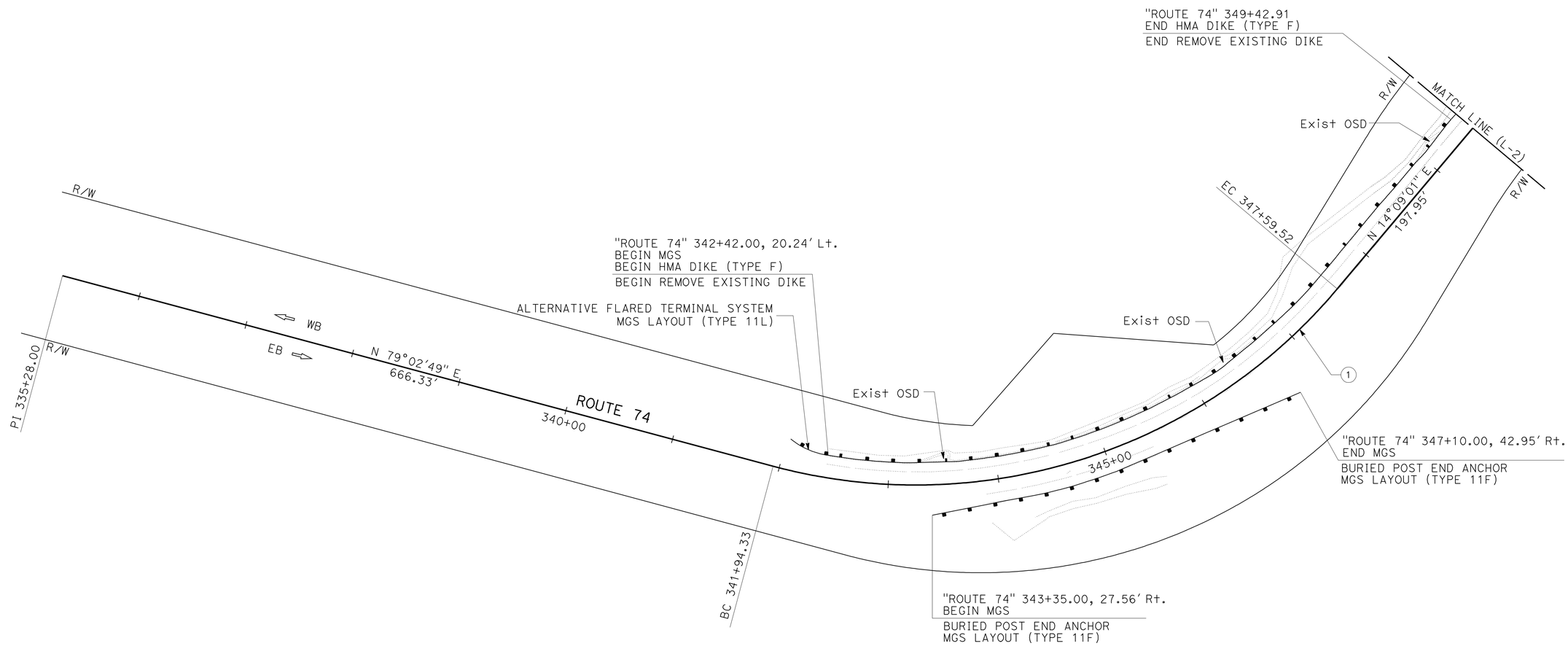

CURVE DATA

No. ⊕	R	Δ	T	L
1	499′	64°53′48″	317.27′	565.20′

LAYOUT
SCALE: 1″ = 50′

L-1

STATE OF CALIFORNIA - DEPARTMENT OF TRANSPORTATION
Caltrans® DESIGN

FUNCTIONAL SUPERVISOR: GEORGE MORHIG
CALCULATED-DESIGNED BY: JIM KENNEDY
CHECKED BY: GEORGE MORHIG
REVISED BY
DATE REVISED

LAST REVISION 09-16-13 | DATE PLOTTED => 16-SEP-2013 | TIME PLOTTED => 10:32

Dist	COUNTY	ROUTE	POST MILES TOTAL PROJECT	SHEET No.	TOTAL SHEETS
08	Riv	74	6.9/10.2	4	28

REGISTERED CIVIL ENGINEER 9-16-13 DATE

9-16-13
PLANS APPROVAL DATE

REGISTERED PROFESSIONAL ENGINEER GEORGE MORHIG No. 50349 Exp. 6/30/15 CIVIL STATE OF CALIFORNIA

THE STATE OF CALIFORNIA OR ITS OFFICERS OR AGENTS SHALL NOT BE RESPONSIBLE FOR THE ACCURACY OR COMPLETENESS OF SCANNED COPIES OF THIS PLAN SHEET.

NOTE:

FOR ACCURATE RIGHT OF WAY DATA, CONTACT RIGHT OF WAY ENGINEERING AT THE DISTRICT OFFICE.

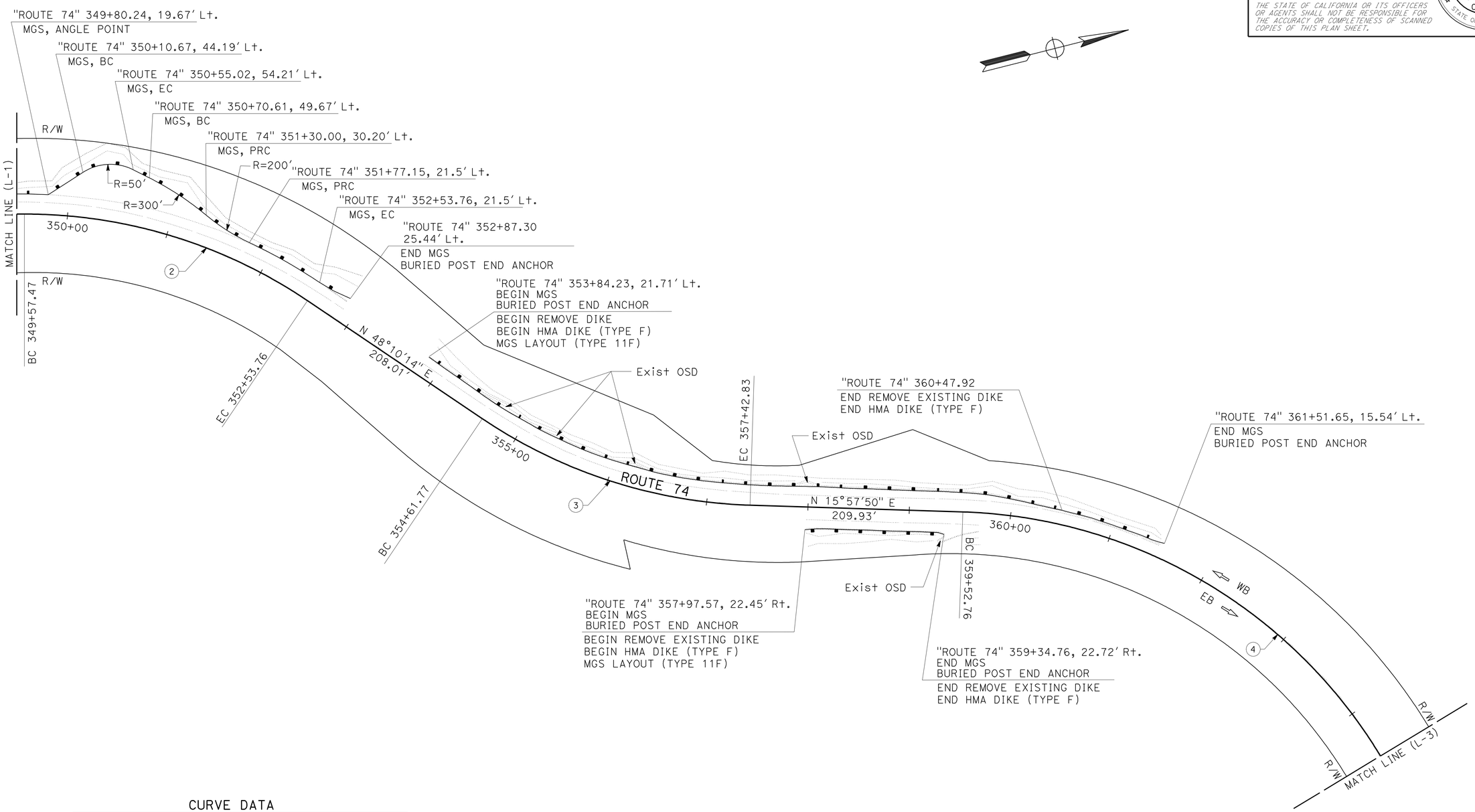

CURVE DATA

No. ⊛	R	Δ	T	L
2	499'	34°1'14"	152.66'	296.29'
3	500'	32°12'25"	144.35'	281.06'
4	500'	96°39'24"	561.75'	843.49'

LAYOUT
SCALE: 1" = 50'

L-2

STATE OF CALIFORNIA - DEPARTMENT OF TRANSPORTATION
Caltrans®
DESIGN

FUNCTIONAL SUPERVISOR: GEORGE MORHIG
CALCULATED-DESIGNED BY: JIM KENNEDY
CHECKED BY: GEORGE MORHIG
REVISED BY
DATE REVISED

LAST REVISION 09-16-13
DATE PLOTTED => 16-SEP-2013
TIME PLOTTED => 10:32

Dist	COUNTY	ROUTE	POST MILES TOTAL PROJECT	SHEET No.	TOTAL SHEETS
08	Riv	74	6.9/10.2	5	28

REGISTERED CIVIL ENGINEER 9-16-13 DATE

9-16-13
PLANS APPROVAL DATE

REGISTERED PROFESSIONAL ENGINEER GEORGE MORHIG No. 50349 Exp. 6/30/15 CIVIL STATE OF CALIFORNIA

THE STATE OF CALIFORNIA OR ITS OFFICERS OR AGENTS SHALL NOT BE RESPONSIBLE FOR THE ACCURACY OR COMPLETENESS OF SCANNED COPIES OF THIS PLAN SHEET.

NOTE:

FOR ACCURATE RIGHT OF WAY DATA, CONTACT
RIGHT OF WAY ENGINEERING AT THE DISTRICT OFFICE.

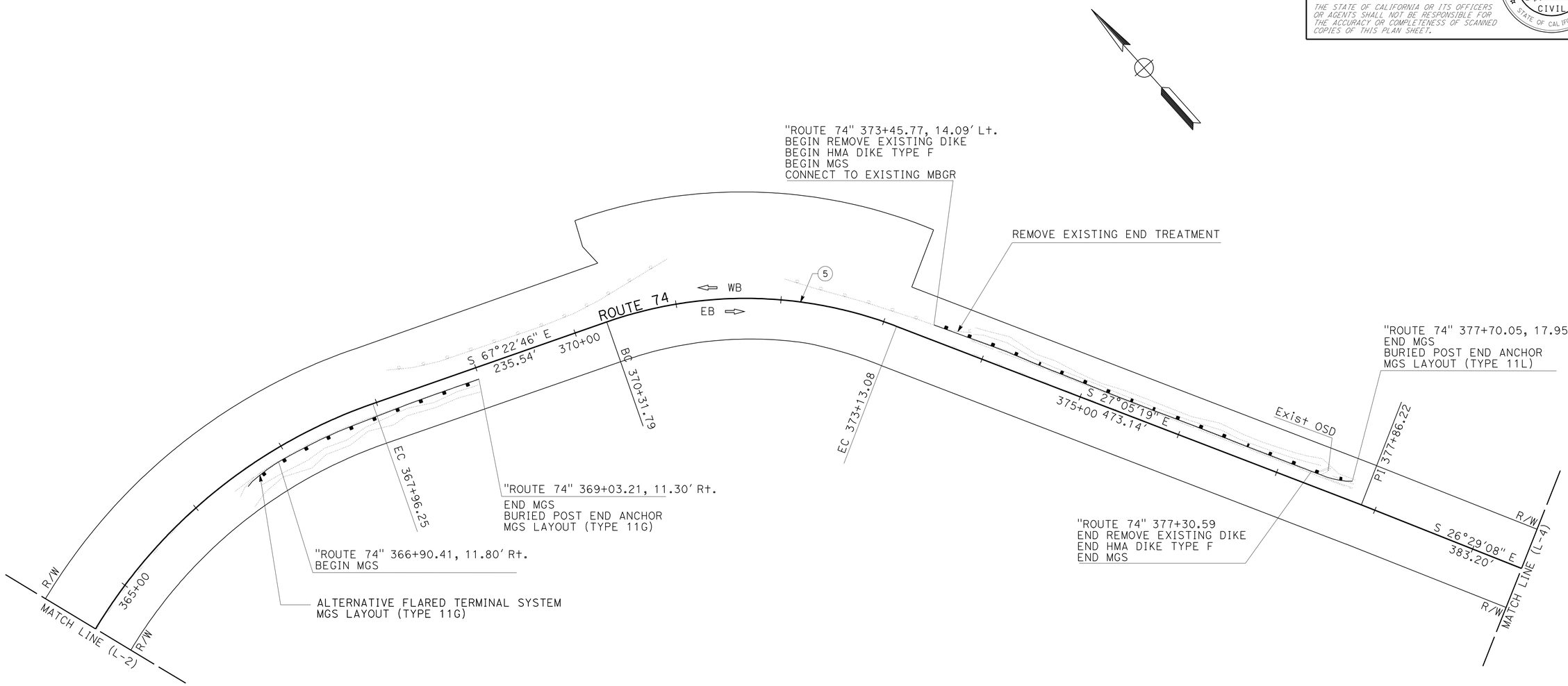

CURVE DATA

No. ⑤	R	Δ	T	L
5	400'	40°17'27"	146.74'	281.28'

LAYOUT
SCALE: 1" = 50'

L-3

STATE OF CALIFORNIA - DEPARTMENT OF TRANSPORTATION
Caltrans
DESIGN

FUNCTIONAL SUPERVISOR: GEORGE MORHIG
CALCULATED-DESIGNED BY: JIM KENNEDY
CHECKED BY: GEORGE MORHIG
REVISED BY
DATE REVISED

LAST REVISION 09-16-13
DATE PLOTTED => 16-SEP-2013
TIME PLOTTED => 10:32

Dist	COUNTY	ROUTE	POST MILES TOTAL PROJECT	SHEET No.	TOTAL SHEETS
08	Riv	74	6.9/10.2	6	28

REGISTERED CIVIL ENGINEER DATE 9-16-13

PLANS APPROVAL DATE 9-16-13

REGISTERED PROFESSIONAL ENGINEER GEORGE MORHIG No. 50349 Exp. 6/30/15 CIVIL STATE OF CALIFORNIA

THE STATE OF CALIFORNIA OR ITS OFFICERS OR AGENTS SHALL NOT BE RESPONSIBLE FOR THE ACCURACY OR COMPLETENESS OF SCANNED COPIES OF THIS PLAN SHEET.

NOTE:

FOR ACCURATE RIGHT OF WAY DATA, CONTACT RIGHT OF WAY ENGINEERING AT THE DISTRICT OFFICE.

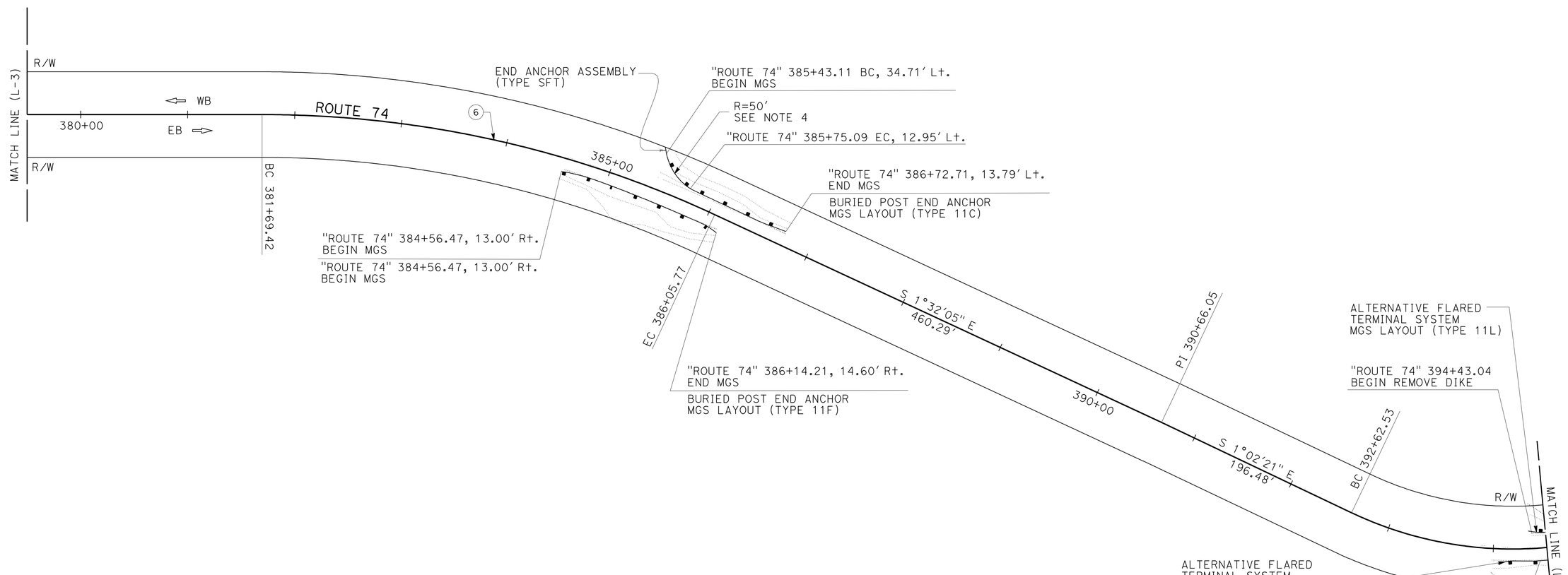

CURVE DATA

No. ⑥	R	Δ	T	L
6	1002'	24°57'04"	221.69'	436.35'

LAYOUT

SCALE: 1" = 50'

L-4

STATE OF CALIFORNIA - DEPARTMENT OF TRANSPORTATION

Caltrans® DESIGN

FUNCTIONAL SUPERVISOR: GEORGE MORHIG

CALCULATED-DESIGNED BY: JIM KENNEDY

CHECKED BY: GEORGE MORHIG

REVISED BY

DATE REVISED

LAST REVISION

DATE PLOTTED => 16-SEP-2013

TIME PLOTTED => 10:32

Dist	COUNTY	ROUTE	POST MILES TOTAL PROJECT	SHEET No.	TOTAL SHEETS
08	Riv	74	6.9/10.2	7	28

REGISTERED CIVIL ENGINEER 9-16-13 DATE

9-16-13
PLANS APPROVAL DATE

REGISTERED PROFESSIONAL ENGINEER GEORGE MORHIG No. 50349 Exp. 6/30/15 CIVIL STATE OF CALIFORNIA

THE STATE OF CALIFORNIA OR ITS OFFICERS OR AGENTS SHALL NOT BE RESPONSIBLE FOR THE ACCURACY OR COMPLETENESS OF SCANNED COPIES OF THIS PLAN SHEET.

NOTE:

FOR ACCURATE RIGHT OF WAY DATA, CONTACT
RIGHT OF WAY ENGINEERING AT THE DISTRICT OFFICE.

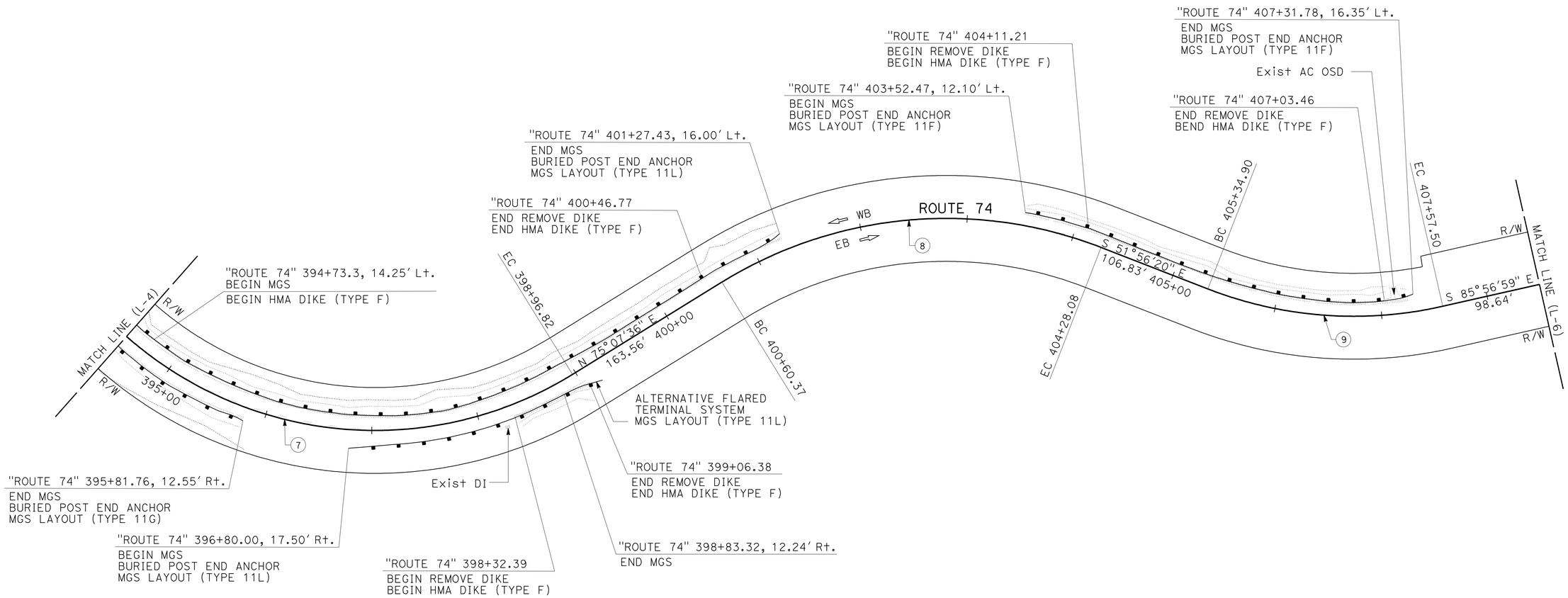

CURVE DATA

No. ⑧	R	Δ	T	L
7	350'	73°8'41"	259.67'	446.82'
8	398'	52°56'04"	198.15'	367.70'
9	375'	34°0'39"	114.69'	222.60'

LAYOUT
SCALE: 1" = 50'

L-5

STATE OF CALIFORNIA - DEPARTMENT OF TRANSPORTATION
Caltrans
DESIGN

FUNCTIONAL SUPERVISOR: GEORGE MORHIG
CALCULATED-DESIGNED BY: JIM KENNEDY
CHECKED BY: GEORGE MORHIG
REVISED BY
DATE REVISED

LAST REVISION 09-16-13
DATE PLOTTED => 16-SEP-2013
TIME PLOTTED => 10:32

Dist	COUNTY	ROUTE	POST MILES TOTAL PROJECT	SHEET No.	TOTAL SHEETS
08	Riv	74	6.9/10.2	8	28

REGISTERED CIVIL ENGINEER 9-16-13 DATE

9-16-13
PLANS APPROVAL DATE

REGISTERED PROFESSIONAL ENGINEER GEORGE MORHIG No. 50349 Exp. 6/30/15 CIVIL STATE OF CALIFORNIA

THE STATE OF CALIFORNIA OR ITS OFFICERS OR AGENTS SHALL NOT BE RESPONSIBLE FOR THE ACCURACY OR COMPLETENESS OF SCANNED COPIES OF THIS PLAN SHEET.

NOTE:

FOR ACCURATE RIGHT OF WAY DATA, CONTACT RIGHT OF WAY ENGINEERING AT THE DISTRICT OFFICE.

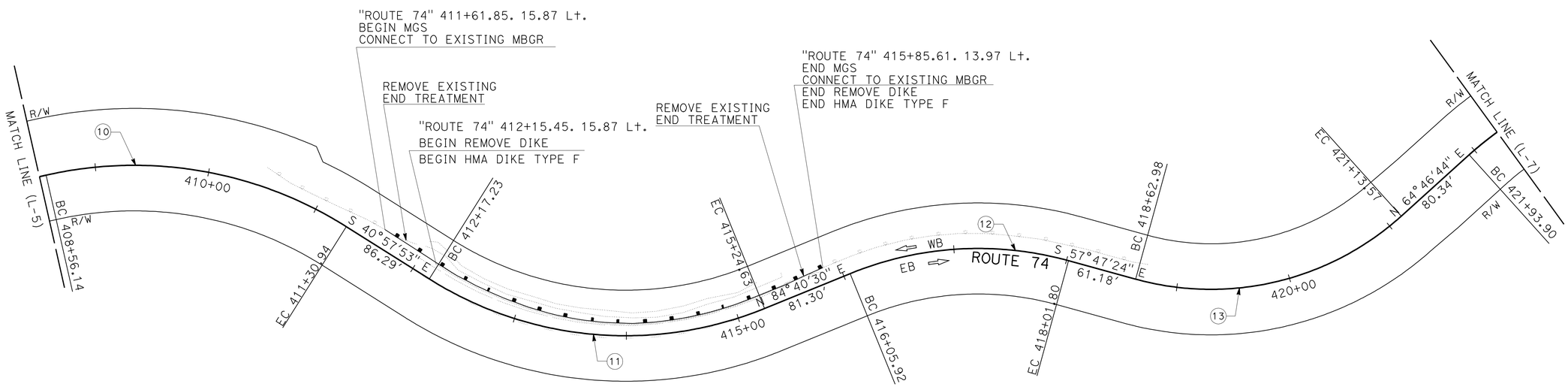

CURVE DATA

No. ⑩	R	Δ	T	L
10	350′	44°59′06"	144.92′	274.80′
11	324′	54°21′36"	166.37′	307.40′
12	299′	37°32′06"	101.60′	195.88′
13	250′	57°25′52"	136.96′	250.59′

LAYOUT
SCALE: 1" = 50′

L-6

STATE OF CALIFORNIA - DEPARTMENT OF TRANSPORTATION
Caltrans®
DESIGN

FUNCTIONAL SUPERVISOR: GEORGE MORHIG
CALCULATED-DESIGNED BY: GEORGE MORHIG
CHECKED BY: JIM KENNEDY
REVISED BY
DATE REVISED

LAST REVISION 09-16-13
DATE PLOTTED => 16-SEP-2013
TIME PLOTTED => 10:32

Dist	COUNTY	ROUTE	POST MILES TOTAL PROJECT	SHEET No.	TOTAL SHEETS
08	Riv	74	6.9/10.2	9	28

REGISTERED CIVIL ENGINEER 9-16-13 DATE

9-16-13
PLANS APPROVAL DATE

REGISTERED PROFESSIONAL ENGINEER GEORGE MORHIG No. 50349 Exp. 6/30/15 CIVIL STATE OF CALIFORNIA

THE STATE OF CALIFORNIA OR ITS OFFICERS OR AGENTS SHALL NOT BE RESPONSIBLE FOR THE ACCURACY OR COMPLETENESS OF SCANNED COPIES OF THIS PLAN SHEET.

NOTE:

FOR ACCURATE RIGHT OF WAY DATA, CONTACT
RIGHT OF WAY ENGINEERING AT THE DISTRICT OFFICE.

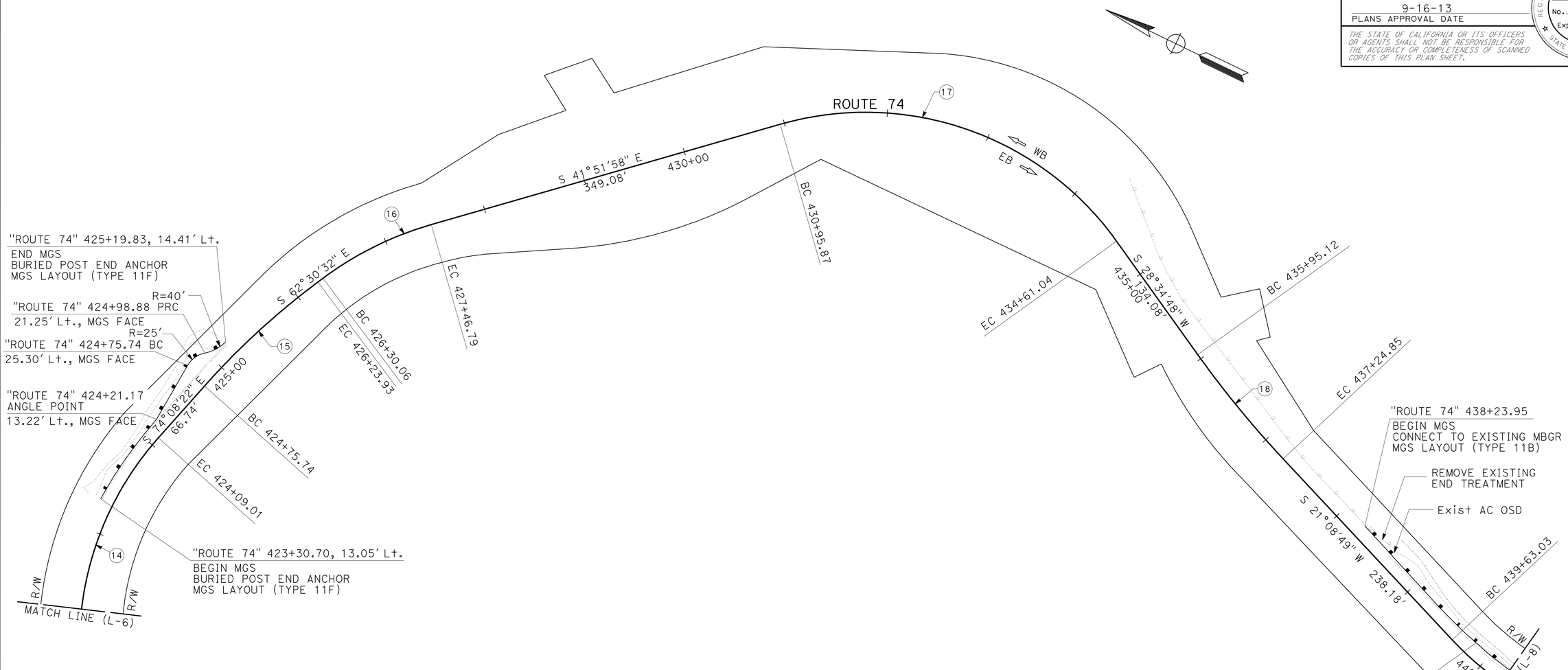

CURVE DATA

No. ⊕	R	Δ	T	L
14	300'	41°4'54"	112.41'	215.10'
15	730'	11°37'50"	74.35'	148.18'
16	324'	20°38'34"	59.01'	116.73'
17	297'	70°26'45"	209.69'	365.17'
18	1000'	7°25'59"	64.96'	129.73'

LAYOUT
SCALE: 1" = 50'

L-7

STATE OF CALIFORNIA - DEPARTMENT OF TRANSPORTATION
Caltrans DESIGN

FUNCTIONAL SUPERVISOR: GEORGE MORHIG
CALCULATED-DESIGNED BY: JIM KENNEDY
CHECKED BY: GEORGE MORHIG
REVISED BY
DATE REVISED

LAST REVISION 09-16-13 | DATE PLOTTED => 16-SEP-2013 | TIME PLOTTED => 10:32

Dist	COUNTY	ROUTE	POST MILES TOTAL PROJECT	SHEET No.	TOTAL SHEETS
08	Riv	74	6.9/10.2	10	28

REGISTERED CIVIL ENGINEER 9-16-13 DATE

PLANS APPROVAL DATE 9-16-13

REGISTERED PROFESSIONAL ENGINEER GEORGE MORHIG No. 50349 Exp. 6/30/15 CIVIL STATE OF CALIFORNIA

THE STATE OF CALIFORNIA OR ITS OFFICERS OR AGENTS SHALL NOT BE RESPONSIBLE FOR THE ACCURACY OR COMPLETENESS OF SCANNED COPIES OF THIS PLAN SHEET.

NOTE:

FOR ACCURATE RIGHT OF WAY DATA, CONTACT RIGHT OF WAY ENGINEERING AT THE DISTRICT OFFICE.

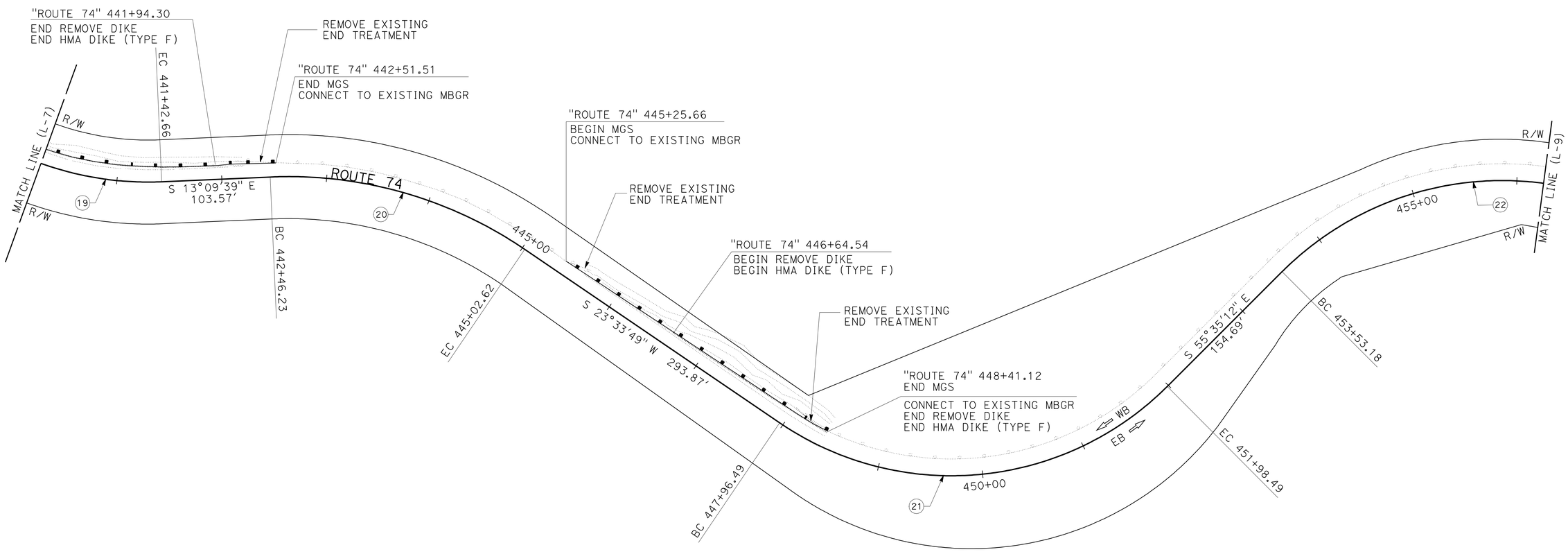

CURVE DATA

No. ⊕	R	Δ	T	L
19	300′	34°18′27"	92.60′	179.63′
20	400′	36°43′28"	132.77′	256.38′
21	291′	79°9′01"	240.52′	402.00′
22	297′	58°25′15"	166.06′	302.83′

LAYOUT
SCALE: 1" = 50′

L-8

STATE OF CALIFORNIA - DEPARTMENT OF TRANSPORTATION
Caltrans
DESIGN

FUNCTIONAL SUPERVISOR: GEORGE MORHIG
CALCULATED-DESIGNED BY: JIM KENNEDY
CHECKED BY: GEORGE MORHIG
REVISED BY
DATE REVISED

LAST REVISION 09-16-13
DATE PLOTTED => 16-SEP-2013
TIME PLOTTED => 10:32

Dist	COUNTY	ROUTE	POST MILES TOTAL PROJECT	SHEET No.	TOTAL SHEETS
08	Riv	74	6.9/10.2	11	28

REGISTERED CIVIL ENGINEER 9-16-13 DATE

9-16-13
PLANS APPROVAL DATE

REGISTERED PROFESSIONAL ENGINEER GEORGE MORHIG No. 50349 Exp. 6/30/15 CIVIL STATE OF CALIFORNIA

THE STATE OF CALIFORNIA OR ITS OFFICERS OR AGENTS SHALL NOT BE RESPONSIBLE FOR THE ACCURACY OR COMPLETENESS OF SCANNED COPIES OF THIS PLAN SHEET.

NOTE:

FOR ACCURATE RIGHT OF WAY DATA, CONTACT RIGHT OF WAY ENGINEERING AT THE DISTRICT OFFICE.

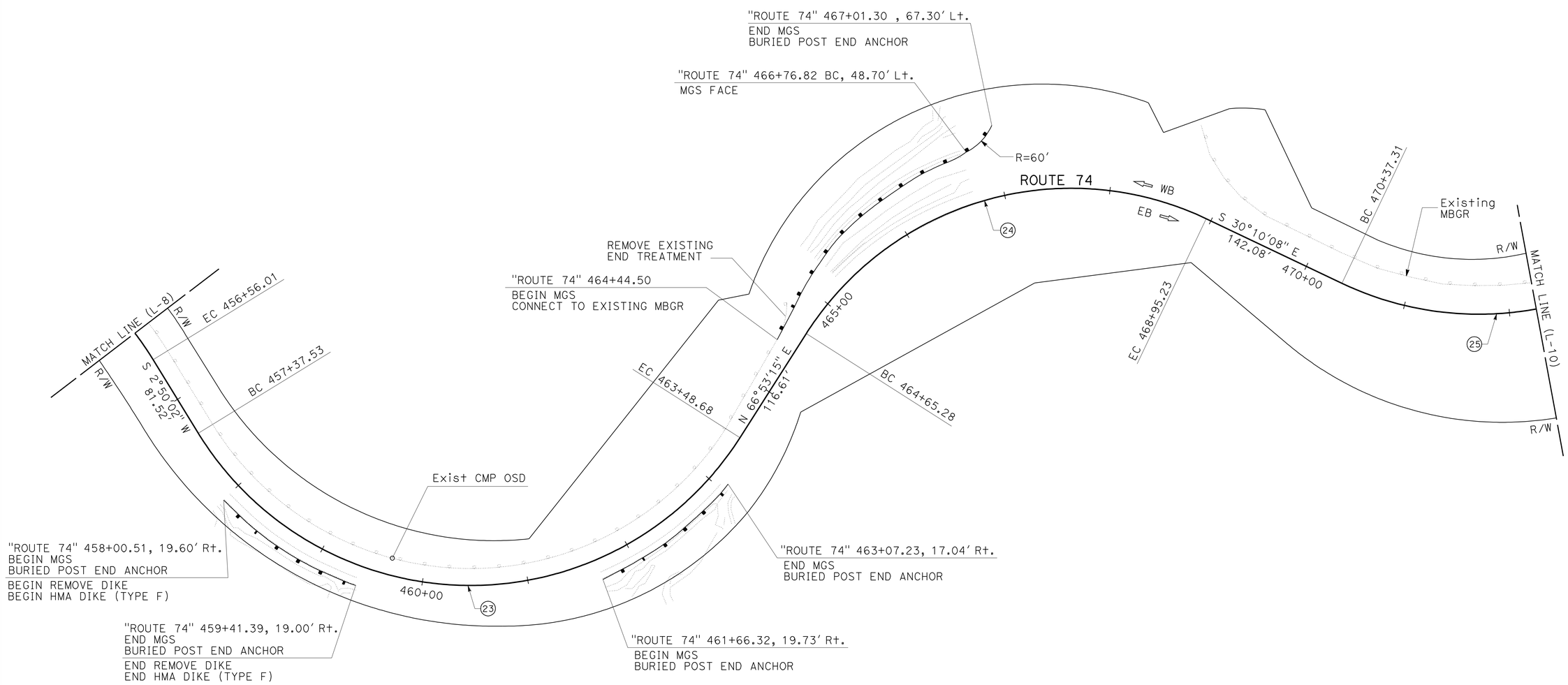

CURVE DATA

No. ⊕	R	Δ	T	L
23	302'	115°56'47"	482.80'	611.14'
24	297'	82°56'37"	262.50'	429.95'
25	301'	94°47'49"	327.32'	498.01'

LAYOUT
SCALE: 1" = 50'

L-9

REVISED BY	DATE REVISED
JIM KENNEDY	GEORGE MORHIG

CALCULATED-DESIGNED BY | CHECKED BY

FUNCTIONAL SUPERVISOR: GEORGE MORHIG

STATE OF CALIFORNIA - DEPARTMENT OF TRANSPORTATION
Caltrans
DESIGN

LAST REVISION 09-16-13 | DATE PLOTTED => 16-SEP-2013 | TIME PLOTTED => 10:32

Dist	COUNTY	ROUTE	POST MILES TOTAL PROJECT	SHEET No.	TOTAL SHEETS
08	Riv	74	6.9/10.2	12	28

REGISTERED CIVIL ENGINEER 9-16-13 DATE

9-16-13
PLANS APPROVAL DATE

REGISTERED PROFESSIONAL ENGINEER
GEORGE MORHIG
No. 50349
Exp. 6/30/15
CIVIL
STATE OF CALIFORNIA

THE STATE OF CALIFORNIA OR ITS OFFICERS OR AGENTS SHALL NOT BE RESPONSIBLE FOR THE ACCURACY OR COMPLETENESS OF SCANNED COPIES OF THIS PLAN SHEET.

NOTE:

FOR ACCURATE RIGHT OF WAY DATA, CONTACT RIGHT OF WAY ENGINEERING AT THE DISTRICT OFFICE.

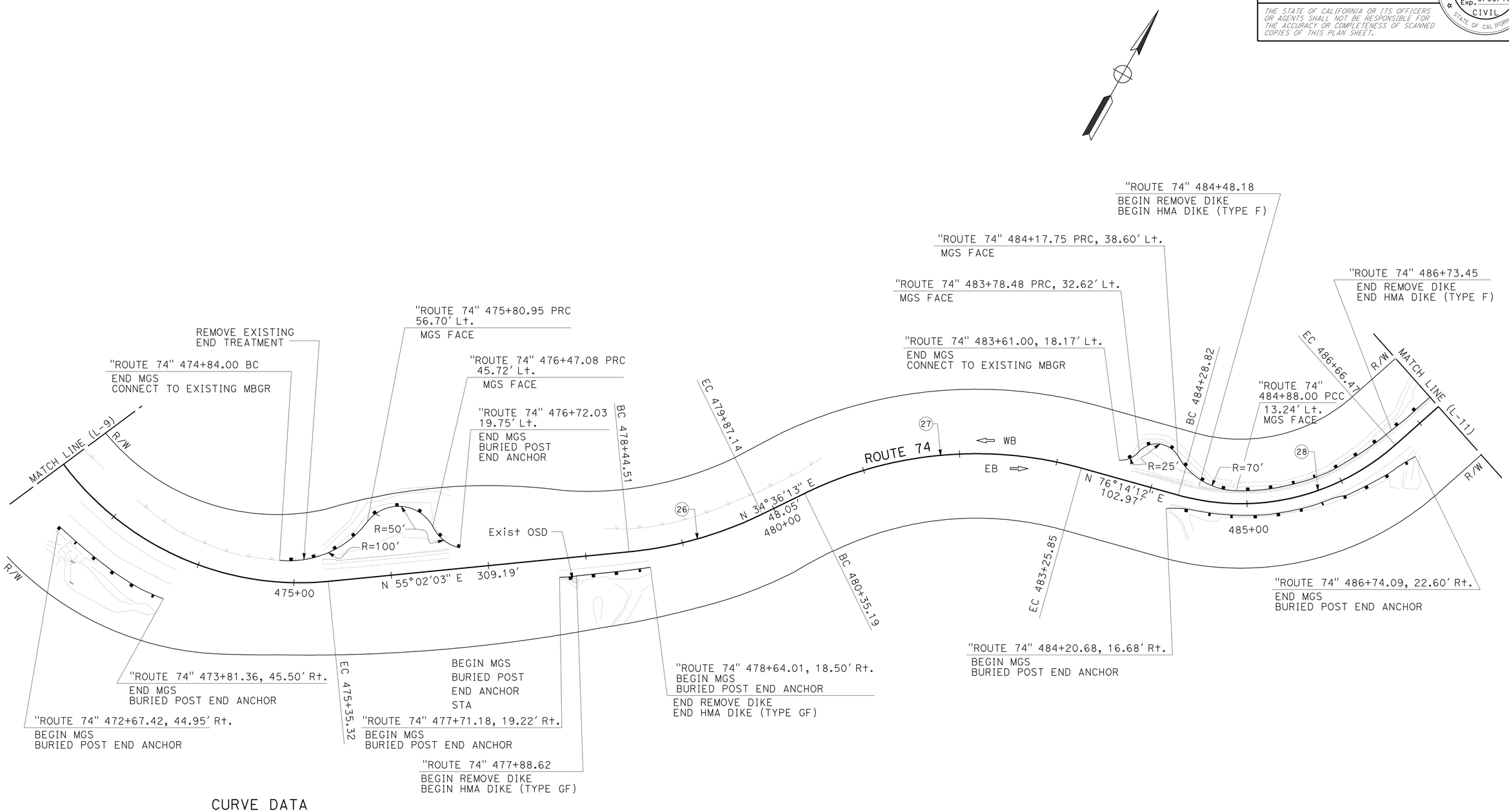

CURVE DATA

No. ⊕	R	Δ	T	L
26	400'	20°25'50"	72.08'	142.63'
27	400'	41°37'59"	152.08'	290.65'
28	238'	57°12'44"	129.79'	237.65'

LAYOUT
SCALE: 1" = 50'

L-10

REVISED BY | DATE REVISED
JIM KENNEDY | GEORGE MORHIG
CALCULATED-DESIGNED BY | CHECKED BY
FUNCTIONAL SUPERVISOR: GEORGE MORHIG
STATE OF CALIFORNIA - DEPARTMENT OF TRANSPORTATION
Caltrans
DESIGN

LAST REVISION 09-16-13 | DATE PLOTTED => 16-SEP-2013 | TIME PLOTTED => 10:32

Dist	COUNTY	ROUTE	POST MILES TOTAL PROJECT	SHEET No.	TOTAL SHEETS
08	Riv	74	6.9/10.2	13	28

REGISTERED CIVIL ENGINEER 9-16-13 DATE

9-16-13
PLANS APPROVAL DATE

REGISTERED PROFESSIONAL ENGINEER GEORGE MORHIG No. 50349 Exp. 6/30/15 CIVIL STATE OF CALIFORNIA

THE STATE OF CALIFORNIA OR ITS OFFICERS OR AGENTS SHALL NOT BE RESPONSIBLE FOR THE ACCURACY OR COMPLETENESS OF SCANNED COPIES OF THIS PLAN SHEET.

NOTE:

FOR ACCURATE RIGHT OF WAY DATA, CONTACT
RIGHT OF WAY ENGINEERING AT THE DISTRICT OFFICE.

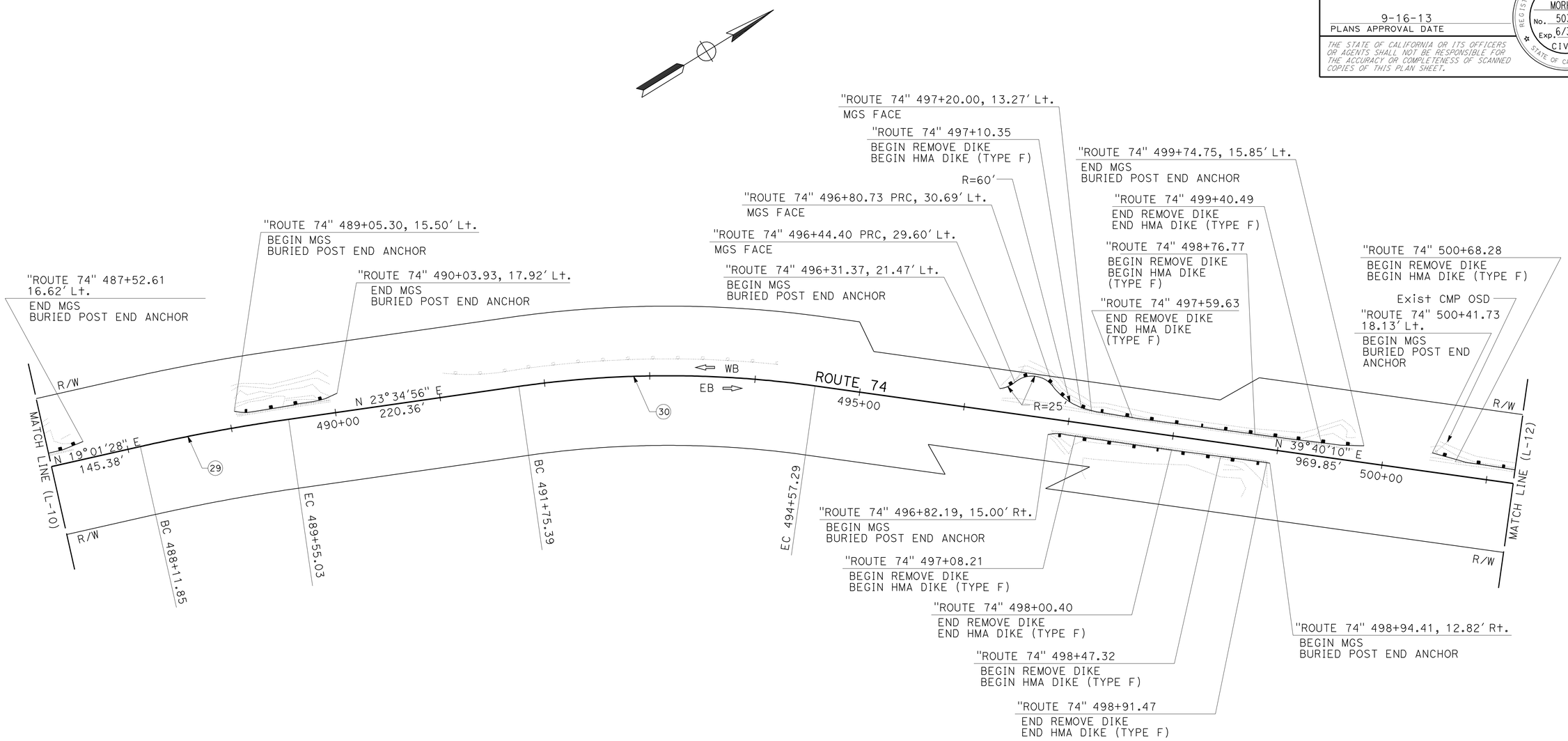

CURVE DATA

No. ⊕	R	Δ	T	L
29	1800'	4°33'27"	71.63'	143.18'
30	1004'	16°5'14"	141.88'	281.90'

LAYOUT
SCALE: 1" = 50'

L-11

STATE OF CALIFORNIA - DEPARTMENT OF TRANSPORTATION
Caltrans
DESIGN

FUNCTIONAL SUPERVISOR: GEORGE MORHIG
CALCULATED-DESIGNED BY: JIM KENNEDY
CHECKED BY: GEORGE MORHIG
REVISED BY
DATE REVISED

LAST REVISION 09-16-13
DATE PLOTTED => 16-SEP-2013
TIME PLOTTED => 10:32

Dist	COUNTY	ROUTE	POST MILES TOTAL PROJECT	SHEET No.	TOTAL SHEETS
08	Riv	74	6.9/10.2	14	28

REGISTERED CIVIL ENGINEER 9-16-13 DATE

9-16-13
PLANS APPROVAL DATE

REGISTERED PROFESSIONAL ENGINEER GEORGE MORHIG No. 50349 Exp. 6/30/15 CIVIL STATE OF CALIFORNIA

THE STATE OF CALIFORNIA OR ITS OFFICERS OR AGENTS SHALL NOT BE RESPONSIBLE FOR THE ACCURACY OR COMPLETENESS OF SCANNED COPIES OF THIS PLAN SHEET.

NOTE:

FOR ACCURATE RIGHT OF WAY DATA, CONTACT RIGHT OF WAY ENGINEERING AT THE DISTRICT OFFICE.

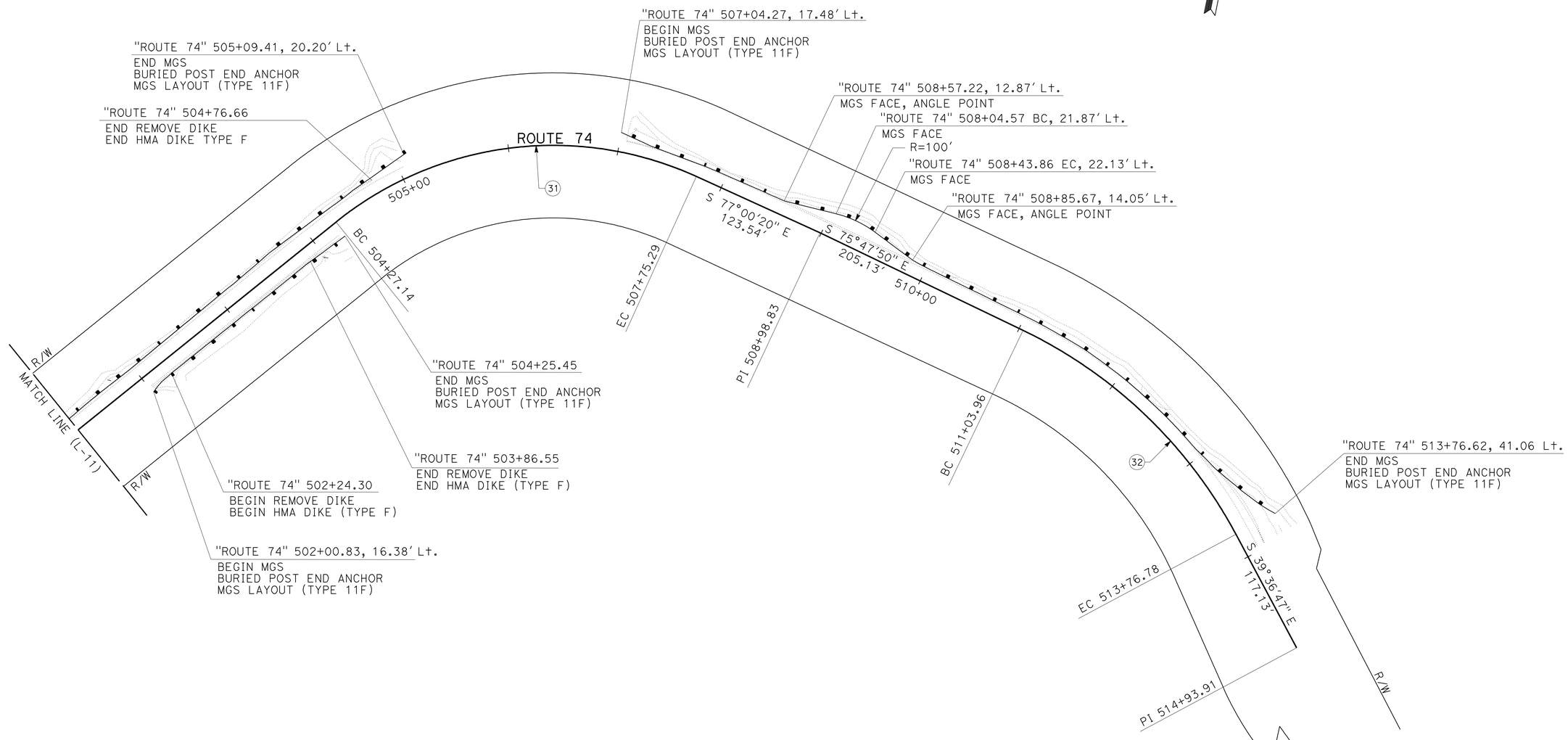

CURVE DATA

No. ㊉	R	Δ	T	L
31	315'	63°19'31"	194.26'	348.15'
32	432'	36°11'03"	141.13'	272.82'

LAYOUT
SCALE: 1" = 50'

L-12

STATE OF CALIFORNIA - DEPARTMENT OF TRANSPORTATION
Caltrans
DESIGN

FUNCTIONAL SUPERVISOR: GEORGE MORHIG
CALCULATED-DESIGNED BY: JIM KENNEDY
CHECKED BY: GEORGE MORHIG
REVISED BY
DATE REVISED

LAST REVISION 09-16-13
DATE PLOTTED => 16-SEP-2013
TIME PLOTTED => 10:32

Dist	COUNTY	ROUTE	POST MILES TOTAL PROJECT	SHEET No.	TOTAL SHEETS
8	Riv	74	6.9/10.2	15	28

REGISTERED CIVIL ENGINEER 9-16-13 DATE

9-16-13
PLANS APPROVAL DATE

REGISTERED PROFESSIONAL ENGINEER
RAGAEI AYOUB
No. C 53909
Exp.12/31/13
CIVIL
STATE OF CALIFORNIA

THE STATE OF CALIFORNIA OR ITS OFFICERS OR AGENTS SHALL NOT BE RESPONSIBLE FOR THE ACCURACY OR COMPLETENESS OF SCANNED COPIES OF THIS PLAN SHEET.

NOTES:

1. THE QUANTITIES OF CONSTRUCTION SITE BMPs SHOWN ON THIS QUANTITIY SHEET (WPCQ-1) ARE INTENDED TO BE USED AS GUIDE LINES ONLY.
2. FIELD CONDITIONS MAY NECESSITATE MODIFICATION OR RELOCATION OF BMPs. AND THEIR QUANTITIES AS PER INSTRUCTION FROM RESIDENT ENGINEER.

TEMPORARY CONSTRUCTION SITE BMPs

TEMPORARY CONSTRUCTION SITE BMPs	UNITS	QUANTITIES
TEMPORARY SOIL BINDER	SQYD	3067
TEMPORARY DRAINAGE INLET PROTECTION	EA	5

TEMPORARY WATER POLLUTION CONTROL QUANTITIES

WPCQ-1

REVISED BY | DATE REVISED
TOM MILES | RAGAEI AYOUB
CALCULATED-DESIGNED BY | CHECKED BY
FUNCTIONAL SUPERVISOR
GEORGE MORHIG
STATE OF CALIFORNIA - DEPARTMENT OF TRANSPORTATION
Caltrans
DESIGN

LAST REVISION 09-16-13 | DATE PLOTTED => 16-SEP-2013 | TIME PLOTTED => 10:32

Dist	COUNTY	ROUTE	POST MILES TOTAL PROJECT	SHEET No.	TOTAL SHEETS
08	Riv	74	6.9/10.2	16	28

Thanh Trinh 9-16-13
REGISTERED CIVIL ENGINEER DATE

9-16-13
PLANS APPROVAL DATE

REGISTERED PROFESSIONAL ENGINEER
THANH TRINH
No. 41189
Exp. 3-31-15
CIVIL
STATE OF CALIFORNIA

THE STATE OF CALIFORNIA OR ITS OFFICERS OR AGENTS SHALL NOT BE RESPONSIBLE FOR THE ACCURACY OR COMPLETENESS OF SCANNED COPIES OF THIS PLAN SHEET.

NOTES:

1. THE EXACT SIGN LOCATIONS WILL BE DETERMINED BY THE ENGINEER.
2. ALL SIGNS SHALL BE STATIONARY.
3. FOR LANE CLOSURE SEE REVISED STANDARD PLAN T-13.

LEGEND:

- PORTABLE FLASHING BEACON
- SIGN (SINGLE POST)
- SIGN (DOUBLE POST)
- WORK AREA

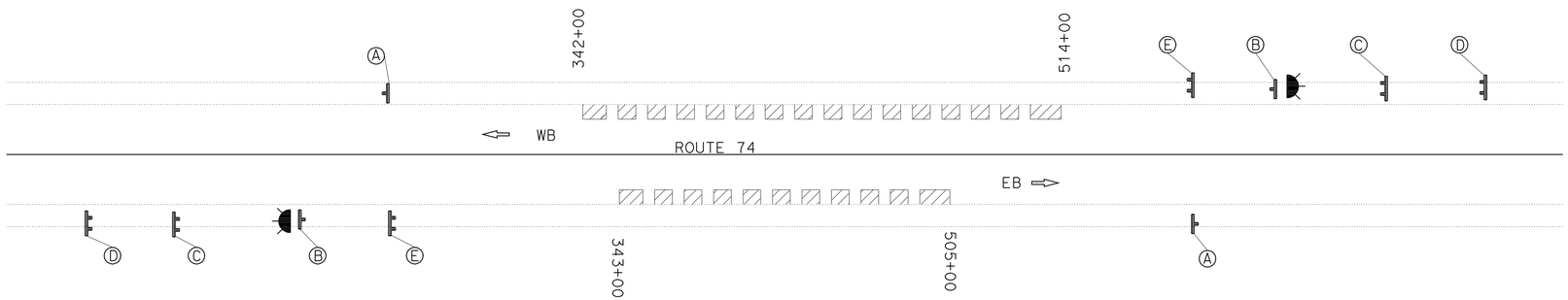

LANE CLOSURE ON TWO-LANE ROAD

STATIONARY MOUNTED CONSTRUCTION AREA SIGNS

SIGN No. (X)	SIGN CODE		PANEL SIZE	SIGN MESSAGE	NUMBER OF POSTS AND SIZE	NUMBER OF SIGNS
	FEDERAL	CALIFORNIA				
A	G20-2		36" x 18"	END ROAD WORK	1- 4" x 4"	2
B	W20-1		48" x 48"	ROAD WORK AHEAD	1- 6" x 6"	2
C		C11(CA)	90" x 48"	NEXT 5 MILE	2- 6" x 6"	2
D		C40(CA)	72" x 36"	TRAFFIC FINES DOUBLED IN CONSTRUCTION ZONES	2- 4" x 6"	2
E	CS-INFO		108" x 72"		2- 6" x 6"	2

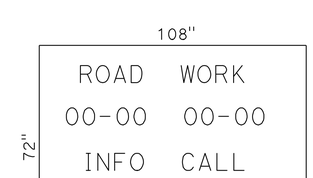

CS-INFO

LETTER SIZE : 8" D

PORTABLE CHANGEABLE MESSAGE SIGN : 4 EACH

FLASHING BEACONS : 2 EACH

APPROVED FOR CONSTRUCTION AREA SIGN WORK ONLY

CONSTRUCTION AREA SIGNS

NO SCALE

CS-1

STATE OF CALIFORNIA - DEPARTMENT OF TRANSPORTATION
Caltrans® TRAFFIC DESIGN

FUNCTIONAL SUPERVISOR: BILL WASSER
CALCULATED-DESIGNED BY: JAMES LIANG
CHECKED BY: THANH TRINH
REVISED BY
DATE REVISED

LAST REVISION 09-16-13 | DATE PLOTTED => 16-SEP-2013 | TIME PLOTTED => 10:32

Dist	COUNTY	ROUTE	POST MILES TOTAL PROJECT	SHEET No.	TOTAL SHEETS
08	Riv	74	6.9/10.2	17	28

Thanh Trinh 9-16-13
REGISTERED CIVIL ENGINEER DATE

9-16-13
PLANS APPROVAL DATE

REGISTERED PROFESSIONAL ENGINEER
THANH TRINH
No. 41189
Exp. 3-31-15
CIVIL
STATE OF CALIFORNIA

THE STATE OF CALIFORNIA OR ITS OFFICERS OR AGENTS SHALL NOT BE RESPONSIBLE FOR THE ACCURACY OR COMPLETENESS OF SCANNED COPIES OF THIS PLAN SHEET.

DELINEATOR (CLASS 1)

LOCATION	STATION	DELINEATION SPACING	QUANTITY
		LF	EA
WESTBOUND	343+42 TO 352+88	65	17
WESTBOUND	353+84 TO 361+52	65	14
WESTBOUND	385+42 TO 386+73	90	2
WESTBOUND	394+36 TO 401+28	50	16
WESTBOUND	403+52 TO 407+32	50	10
WESTBOUND	411+99 TO 415+48	50	9
WESTBOUND	423+30 TO 425+50	50	6
WESTBOUND	438+62 TO 442+14	50	9
WESTBOUND	465+24 TO 466+77	50	6
WESTBOUND	483+76 TO 487+53	35	13
WESTBOUND	507+04 TO 513+77	55	15
EASTBOUND	343+35 TO 347+10	65	8
EASTBOUND	367+03 TO 369+03	60	6
EASTBOUND	384+57 TO 386+14	90	4
EASTBOUND	394+43 TO 395+82	50	5
EASTBOUND	396+80 TO 399+06	50	7
EASTBOUND	458+00 TO 459+41	50	5
EASTBOUND	461+66 TO 463+07	50	5
EASTBOUND	472+67 TO 473+81	50	5
EASTBOUND	484+20 TO 486+74	35	10
TOTAL			172

PAVEMENT DELINEATOR QUANTITIES
PDQ-1

STATE OF CALIFORNIA - DEPARTMENT OF TRANSPORTATION
Caltrans TRAFFIC DESIGN

FUNCTIONAL SUPERVISOR: BILL WASSER
CALCULATED-DESIGNED BY: JAMES LIANG
CHECKED BY: THANH TRINH
REVISED BY
DATE REVISED

LAST REVISION 09-16-13 DATE PLOTTED => 16-SEP-2013 TIME PLOTTED => 10:32

Dist	COUNTY	ROUTE	POST MILES TOTAL PROJECT	SHEET No.	TOTAL SHEETS
08	Riv	74	6.9/10.2	18	28

REGISTERED CIVIL ENGINEER 9-16-13 DATE

9-16-13
PLANS APPROVAL DATE

REGISTERED PROFESSIONAL ENGINEER GEORGE MORHIG No. 50349 Exp. 6/30/15 CIVIL STATE OF CALIFORNIA

THE STATE OF CALIFORNIA OR ITS OFFICERS OR AGENTS SHALL NOT BE RESPONSIBLE FOR THE ACCURACY OR COMPLETENESS OF SCANNED COPIES OF THIS PLAN SHEET.

METAL BEAM GUARD RAIL

LOCATION					REMOVE MBGR (END TREATMENT)	TREATED WOOD WASTE	MGS (7' STEEL POST)	END ANCHOR ASSEMBLY (TYPE SFT)	ALTERNATIVE FLARED TERMINAL SYSTEM
STATION		LAYOUT TYPE	SIDE						
FROM	TO		LEFT	RIGHT	LF	LB	LF	EA	EA
342+42.00	352+87.70	11L	X				1062.5		1
343+35.00	347+10.00	11F		X			362.5		
353+84.23	361+51.65	11F	X				762.5		
357+97.57	359+34.76	11F		X			137.5		
366+90.41	369+03.21	11G		X			212.5		1
373+45.77	377+70.05	11L	X		37.5	680.0	425.0		
384+56.47	386+14.21	11F		X			162.5		
385+43.11	386+72.71	11C	X				150.0	1	
394+43.04	395+81.76	11G		X			175.0		1
394+73.30	401+27.43	11L	X				687.5		1
396+80.00	398+83.82	11L		X			237.5		1
403+52.47	407+31.78	11F	X				375.0		
411+61.85	415+85.61	11E	X		75.0	1360.0	412.5		
423+30.70	425+19.83	11F	X				212.5		
438+23.95	442+51.51	11B	X		75.0	1360.0	425.0		
445+25.66	448+41.02	11B	X		75.0	1360.0	350.0		
458+00.51	459+41.39	11F		X			150.0		
461+66.32	463+07.23	11F		X			150.0		
464+44.50	467+09.00	11C	X		37.5	680.0	300.0		
472+67.42	473+81.36	11F		X			137.5		
474+84.00	476+72.03	11C	X		37.5	680.0	225.0		
477+71.18	478+64.01	11F		X			100.0		
483+76.00	487+52.61	11F	X				412.5		
484+20.68	486+74.09	11F		X			275.0		
489+05.30	490+03.93	11F	X				100.0		
496+31.37	499+74.75	11F	X				375.0		
496+82.19	498+94.41	11F		X			212.5		
500+41.73	505+09.41	11F	X				487.5		
502+00.83	504+25.45	11F		X			225.0		
507+04.27	513+76.62	11F	X				700.0		
TOTAL					337.5	6120	10,000	1	5

DIKE MATERIAL QUANTITIES

HOT MIX ASPHALT FOR MISC. AREAS AND DIKES	58.0 TONS

HMAC DIKE REMOVAL & REPLACEMENT

LOCATION				REMOVE ASPHALT CONCRETE DIKE	PLACE HOT MIX ASPHALT DIKE (TYPE F)
STATION		SIDE			
FROM	TO	LEFT	RIGHT	LF	LF
342+41.97	349+42.91	X		582.71	582.71
353+84.23	360+47.92	X		513.46	513.46
357+97.57	359+34.76		X	132.81	132.81
373+45.77	377+30.59	X		346.92	346.92
394+36.71	400+46.77	X		592.03	592.03
398+32.39	399+06.38		X	76.06	76.06
404+11.21	407+03.46	X		287.37	287.37
412+15.45	415+85.61	X		322.14	322.14
439+81.57	441+94.30	X		205.19	205.19
446+64.54	448+41.12	X		174.81	174.81
458+00.51	459+41.39		X	147.80	147.80
477+88.62	478+64.01		X	74.74	74.74
484+48.18	486+73.45	X		214.00	214.00
497+08.21	498+00.40		X	93.30	93.30
497+10.35	497+59.63	X		49.36	49.36
498+47.32	498+91.47		X	44.16	44.16
498+76.77	499+40.49	X		63.72	63.72
500+68.28	504+74.66	X		408.46	408.46
502+24.30	503+86.55		X	162.25	162.25
TOTAL				4491.29	4491.29

SUMMARY OF QUANTITIES

Q-1

REVISED BY | DATE REVISED
JIM KENNEDY | GEORGE MORHIG
CALCULATED-DESIGNED BY | CHECKED BY
FUNCTIONAL SUPERVISOR: GEORGE MORHIG
STATE OF CALIFORNIA - DEPARTMENT OF TRANSPORTATION
Caltrans
DESIGN

LAST REVISION 09-16-13 | DATE PLOTTED => 16-SEP-2013 | TIME PLOTTED => 10:32

M

Maint	MAINTENANCE
Max	MAXIMUM
MB	METAL BEAM
MBB	METAL BEAM BARRIER
MBGR	METAL BEAM GUARD RAILING
Med	MEDIAN
MGS	MIDWEST GUARDRAIL SYSTEM
MH	MANHOLE
Min	MINIMUM
Misc	MISCELLANEOUS
Misc I & S	MISCELLANEOUS IRON AND STEEL
Mkr	MARKER
Mod	MODIFIED, MODIFY
Mon	MONUMENT
MP	METAL PLATE
MPGR	METAL PLATE GUARD RAILING
MR	MOVEMENT RATING
MSE	MECHANICALLY STABILIZED EMBANKMENT
Mt	MOUNTAIN, MOUNT
Mtl	MATERIAL
MVP	MAINTENANCE VEHICLE PULLOUT

N

N	NORTH
NB	NORTHBOUND
No.	NUMBER (MUST HAVE PERIOD)
Nos.	NUMBERS (MUST HAVE PERIOD)
NPS	NOMINAL PIPE SIZE
NS	NEAR SIDE
NSP	NEW STANDARD PLAN
NTS	NOT TO SCALE

O

Oblr	OBLITERATE
OC	OVERCROSSING
OD	OUTSIDE DIAMETER
OF	OUTSIDE FACE
OG	ORIGINAL GROUND
OGAC	OPEN GRADED ASPHALT CONCRETE
OGFC	OPEN GRADED FRICTION COURSE
OH	OVERHEAD
OHWM	ORDINARY HIGH WATER MARK
O-O	OUT TO OUT
Opp	OPPOSITE
OSD	OVERSIDE DRAIN

P

p	PAGE
PAP	PERFORATED ALUMINUM PIPE
PB	PULL BOX
PC	POINT OF CURVATURE, PRECAST
PCC	POINT OF COMPOUND CURVE, PORTLAND CEMENT CONCRETE
PCMS	PORTABLE CHANGEABLE MESSAGE SIGN
PCP	PERFORATED CONCRETE PIPE, PRESTRESSED CONCRETE PIPE
PCVC	POINT OF COMPOUND VERTICAL CURVE
PEC	PERMIT TO ENTER AND CONSTRUCT
Ped	PEDESTRIAN
Ped OC	PEDESTRIAN OVERCROSSING
Ped UC	PEDESTRIAN UNDERCROSSING
Perm Mtl	PERMEABLE MATERIAL

P continued

PG	PROFILE GRADE
PI	POINT OF INTERSECTION
PJP	PARTIAL JOINT PENETRATION
Pkwy	PARKWAY
ℙ,PL	PLATE
P/L	PROPERTY LINE
PM	POST MILE, TIME FROM NOON TO MIDNIGHT
PN	PAVING NOTCH
POC	POINT OF HORIZONTAL CURVE
POT	POINT OF TANGENT
POVC	POINT OF VERTICAL CURVE
PP	PIPE PILE, PLASTIC PIPE, POWER POLE
PPL	PREFORMED PERMEABLE LINER
PPP	PERFORATED PLASTIC PIPE
PRC	POINT OF REVERSE CURVE
PRF	PAVEMENT REINFORCING FABRIC
PRVC	POINT OF REVERSE VERTICAL CURVE
PS&E	PLANS, SPECIFICATIONS AND ESTIMATES
PS, P/S	PRESTRESSED
PSP	PERFORATED STEEL PIPE
PT	POINT OF TANGENCY
PVC	POLYVINYL CHLORIDE
Pvmt	PAVEMENT

Q

Qty	QUANTITY

R

R	RADIUS
R & D	REMOVE AND DISPOSE
R & S	REMOVE AND SALVAGE
R/C	RATE OF CHANGE
RCA	REINFORCED CONCRETE ARCH
RCB	REINFORCED CONCRETE BOX
RCP	REINFORCED CONCRETE PIPE
RCPA	REINFORCED CONCRETE PIPE ARCH
Rd	ROAD
Reinf	REINFORCED, REINFORCEMENT, REINFORCING
Rel	RELOCATE
Repl	REPLACEMENT
Ret	RETAINING
Rev	REVISED, REVISION
Rdwy	ROADWAY
RHMA	RUBBERIZED HOT MIX ASPHALT
Riv	RIVER
RM	ROAD-MIXED
RP	RADIUS POINT, REFERENCE POINT
RR	RAILROAD
RSP	ROCK SLOPE PROTECTION, REVISED STANDARD PLAN
Rt	RIGHT
Rte	ROUTE
RW	REDWOOD, RETAINING WALL
R/W	RIGHT OF WAY
Rwy	RAILWAY

S

S	SOUTH, SUPPLEMENT
SAE	STRUCTURE APPROACH EMBANKMENT
Salv	SALVAGE
SAPP	STRUCTURAL ALUMINUM PLATE PIPE
SB	SOUTHBOUND
SC	SAND CUSHION
SCSP	SLOTTED CORRUGATED STEEL PIPE
SD	STORM DRAIN
Sec	SECOND, SECTION
Sep	SEPARATION
SG	SUBGRADE
Shld	SHOULDER
Sht	SHEET
Sim	SIMILAR
℄	STATION LINE
SM	SELECTED MATERIAL
Spec	SPECIAL, SPECIFICATIONS
SPP	SLOTTED PLASTIC PIPE
SS	SLOPE STAKE
SSBM	STRAP AND SADDLE BRACKET METHOD
SSD	STRUCTURAL SECTION DRAIN
SSPA	STRUCTURAL STEEL PLATE ARCH
SSPP	STRUCTURAL STEEL PLATE PIPE
SSPPA	STRUCTURAL STEEL PLATE PIPE ARCH
SSRP	STEEL SPIRAL RIB PIPE
St	STREET
Sta	STATION
STBB	SINGLE THRIE BEAM BARRIER
Std	STANDARD
Str	STRUCTURE
Surf	SURFACING
SW	SIDEWALK, SOUND WALL
Swr	SEWER
Sym	SYMMETRICAL
S4S	SURFACE 4 SIDES

T

T	SEMI-TANGENT
Tan	TANGENT
TBB	THRIE BEAM BARRIER
Tbr	TIMBER
TC	TOP OF CURB
TCB	TRAFFIC CONTROL BOX
TCE	TEMPORARY CONSTRUCTION EASEMENT
Tel	TELEPHONE
Temp	TEMPORARY
TG	TOP OF GRADE
Tot	TOTAL
TP	TELEPHONE POLE
TPB	TREATED PERMEABLE BASE
TPM	TREATED PERMEABLE MATERIAL
Trans	TRANSITION

T continued

TS	TRANSVERSE, TRAFFIC SIGNAL, TUBULAR STEEL
Typ	TYPICAL

U

UC	UNDERCROSSING
UD	UNDERDRAIN
UG	UNDERGROUND
UON	UNLESS OTHERWISE NOTED
UP	UNDERPASS

V

V	VALVE, DESIGN SPEED
Var	VARIABLE, VARIES
VC	VERTICAL CURVE
VCP	VITRIFIED CLAY PIPE
Vert	VERTICAL
Via	VIADUCT
Vol	VOLUME

W

W	WEST, WIDTH
WB	WESTBOUND
WH	WEEP HOLE
WM	WIRE MESH
WS	WATER SURFACE
WSP	WELDED STEEL PIPE
Wt	WEIGHT
WV	WATER VALVE
WW	WINGWALL
WWLOL	WINGWALL LAYOUT LINE

X

X Sec	CROSS SECTION
Xing	CROSSING

Y

Yr	YEAR
Yrs	YEARS

Dist	COUNTY	ROUTE	POST MILES TOTAL PROJECT	SHEET No.	TOTAL SHEETS
08	Riv	74	6.9/10.2	19	28

Grace M. Tsushima
REGISTERED CIVIL ENGINEER

July 19, 2013
PLANS APPROVAL DATE

REGISTERED PROFESSIONAL ENGINEER
Grace M. Tsushima
No. C49814
Exp. 9-30-14
CIVIL
STATE OF CALIFORNIA

THE STATE OF CALIFORNIA OR ITS OFFICERS OR AGENTS SHALL NOT BE RESPONSIBLE FOR THE ACCURACY OR COMPLETENESS OF SCANNED COPIES OF THIS PLAN SHEET.

TO ACCOMPANY PLANS DATED 9-16-13

UNIT OF MEASUREMENT SYMBOLS:

Some of the symbols used in the project plan quantity tables and in the Bid Item List are:

TABLE A

SYMBOL USED	DEFINITIONS
ACRE	ACRE
CF	CUBIC FOOT
CY	CUBIC YARD
EA	EACH
GAL	GALLON
LB	POUND
LF	LINEAR FOOT
SQFT	SQUARE FOOT
SQYD	SQUARE YARD
STA	100 FEET
TAB	TABLET
TON	2,000 POUNDS

Some of the symbols used in the plans other than in the project plan quantity tables are:

TABLE B

SYMBOL USED	DEFINITIONS
ksi	KIPS PER SQUARE INCH
ksf	KIPS PER SQUARE FOOT
psi	POUNDS PER SQUARE INCH
psf	POUNDS PER SQUARE FOOT
lb/ft^3, pcf	POUNDS PER CUBIC FOOT
tsf	TONS PER SQUARE FOOT
mph, MPH *	MILES PER HOUR
ø	NOMINAL DIAMETER
oz	OUNCE
lb	POUND
kip	1,000 POUNDS
cal	CALORIE
ft	FOOT OR FEET
gal	GALLON

* For use on a sign panel only

STATE OF CALIFORNIA
DEPARTMENT OF TRANSPORTATION

ABBREVIATIONS (SHEET 2 OF 2)

NO SCALE

RSP A10B DATED JULY 19, 2013 SUPERSEDES STANDARD PLAN A10B DATED MAY 20, 2011 - PAGE 2 OF THE STANDARD PLANS BOOK DATED 2010.

REVISED STANDARD PLAN RSP A10B

2010 REVISED STANDARD PLAN RSP A10B

6-7-13

Dist	COUNTY	ROUTE	POST MILES TOTAL PROJECT	SHEET No.	TOTAL SHEETS
08	Riv	74	6.9/10.2	20	28

Randell D. Hiatt
REGISTERED CIVIL ENGINEER

July 19, 2013
PLANS APPROVAL DATE

REGISTERED PROFESSIONAL ENGINEER
Randell D. Hiatt
No. C50200
Exp. 6-30-15
CIVIL
STATE OF CALIFORNIA

THE STATE OF CALIFORNIA OR ITS OFFICERS OR AGENTS SHALL NOT BE RESPONSIBLE FOR THE ACCURACY OR COMPLETENESS OF SCANNED COPIES OF THIS PLAN SHEET.

TO ACCOMPANY PLANS DATED 9-16-13

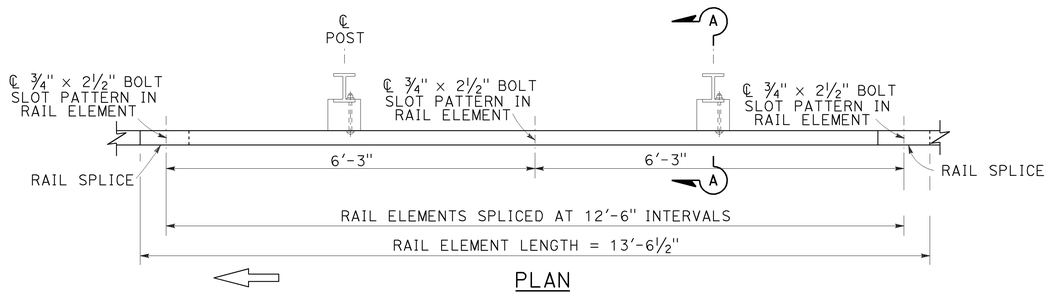

PLAN

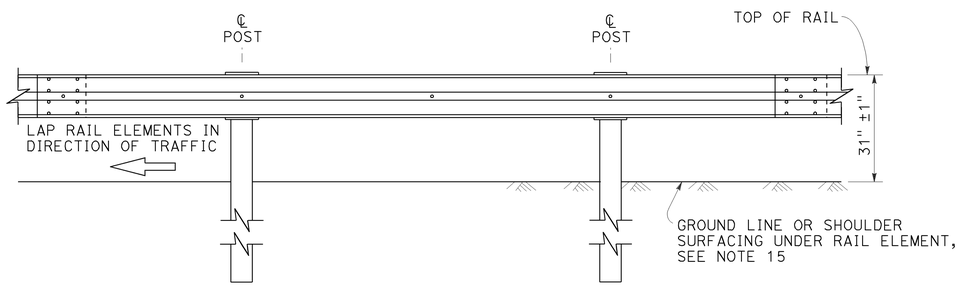

ELEVATION

MIDWEST GUARDRAIL SYSTEM WITH STEEL POSTS AND NOTCHED WOOD OR NOTCHED RECYCLED PLASTIC BLOCKS

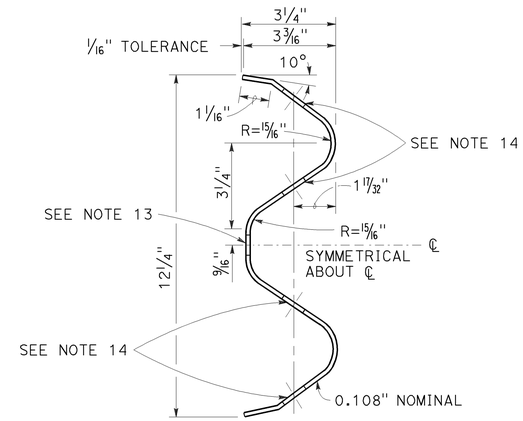

SECTION THRU RAIL ELEMENT

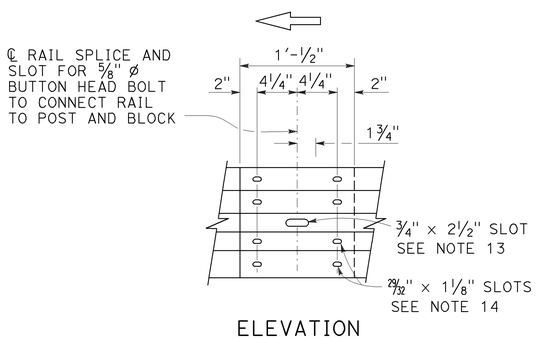

ELEVATION

RAIL ELEMENT SPLICE DETAIL

a) Connect the over lapped end of the rail elements with ⅝" ø × 1⅜" button head oval shoulder splice bolts inserted into the 29⁄32" × 1⅛" slots and bolted together with ⅝" ø recessed hex nuts. Recess of hex nut points toward rail element. A total of 8 bolts and nuts are to be used at each rail splice connection.

b) The ends of the rail elements are to be overlapped in the direction of traffic (see details).

c) Where end cap is to be attached to the end of a rail element, a total of 4 of the above described splice bolts and nuts are to be used.

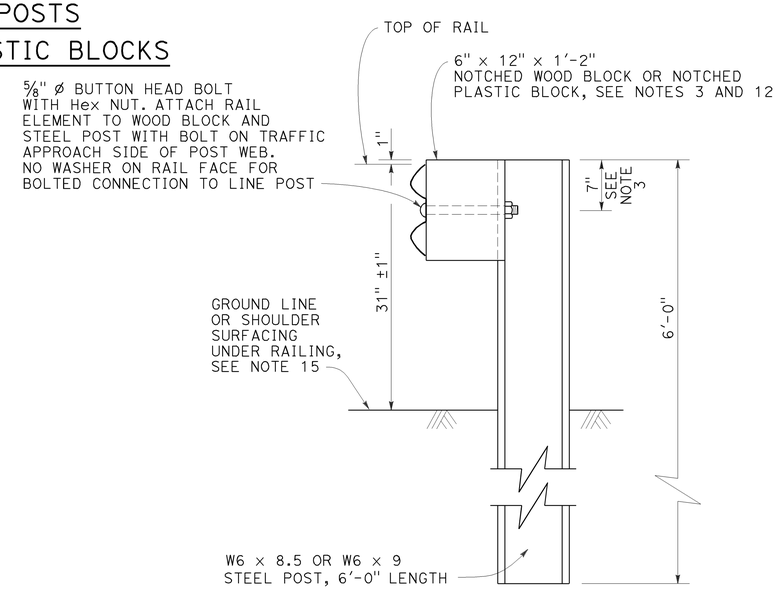

SECTION A-A

TYPICAL STEEL LINE POST INSTALLATION

See Note 4

NOTES:

1. For details of wood post installations, see Revised Standard Plan RSP A77L1.
2. For details of standard hardware used to construct MGS, see Revised Standard Plan RSP A77M1.
3. For details of steel posts and notched wood blocks used to construct MGS, see Revised Standard Plan RSP A77N2.
4. For additional installation details, see Revised Standard Plan RSP A77N3.
5. MGS post spacing to be 6'-3" center to center, except as otherwise noted.
6. For MGS typical layouts, see the A77P, A77Q and A77R Series of Standard Plans.
7. If railing is connected to terminal system end treatment, use 31" height terminal system end treatment.
8. For MGS end anchor details, see Revised Standard Plans RSP A77S1 and RSP A77T2.
9. For details of MGS transition to bridge railing, see Revised Standard Plan RSP A77U4.
10. For additional details of MGS connection to bridge railings, see Revised Standard Plans RSP A77U1, RSP A77U2 and RSP A77V1.
11. For dike positioning and MGS delineation details, see Revised Standard Plan RSP A77N4.
12. Notched face of block faces steel post.
13. Slotted hole for bolted connection of rail element to block and post. See "Section Thru Rail Element".
14. Slotted holes for splice bolts to overlap ends of rail element. See "Section Thru Rail Element".
15. Install posts in soil.

STATE OF CALIFORNIA
DEPARTMENT OF TRANSPORTATION

MIDWEST GUARDRAIL SYSTEM STANDARD RAILING SECTION (STEEL POST WITH NOTCHED WOOD OR NOTCHED RECYCLED PLASTIC BLOCK)

NO SCALE

RSP A77L2 DATED JULY 19, 2013 SUPPLEMENTS THE STANDARD PLANS BOOK DATED 2010.

REVISED STANDARD PLAN RSP A77L2

2010 REVISED STANDARD PLAN RSP A77L2

7-3-13

Dist	COUNTY	ROUTE	POST MILES TOTAL PROJECT	SHEET No.	TOTAL SHEETS
08	Riv	74	6.9/10.2	21	28

Randell D. Hiatt
REGISTERED CIVIL ENGINEER

July 19, 2013
PLANS APPROVAL DATE

REGISTERED PROFESSIONAL ENGINEER
Randell D. Hiatt
No. C50200
Exp. 6-30-15
CIVIL
STATE OF CALIFORNIA

THE STATE OF CALIFORNIA OR ITS OFFICERS OR AGENTS SHALL NOT BE RESPONSIBLE FOR THE ACCURACY OR COMPLETENESS OF SCANNED COPIES OF THIS PLAN SHEET.

TO ACCOMPANY PLANS DATED 9-16-13

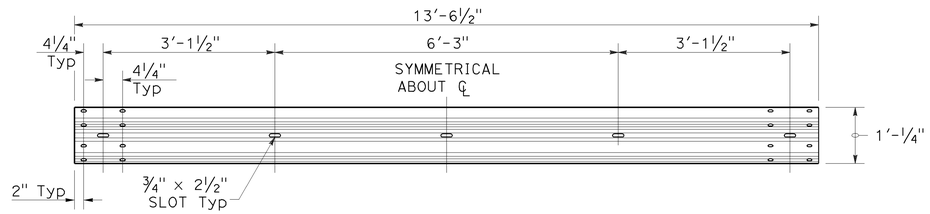

TYPICAL RAIL ELEMENT

NOTE:

1. Slotted holes for splice bolts to overlap ends of rail element.

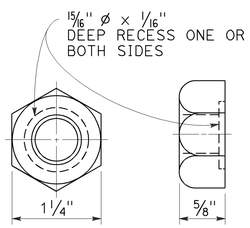

⅝" ø RECESS NUT

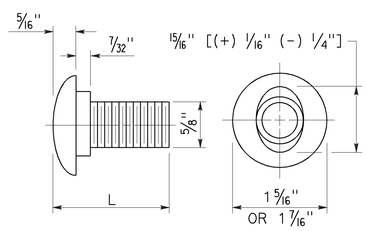

⅝" ø BUTTON HEAD BOLT

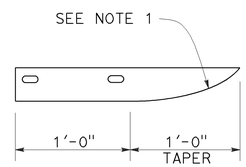

PLAN

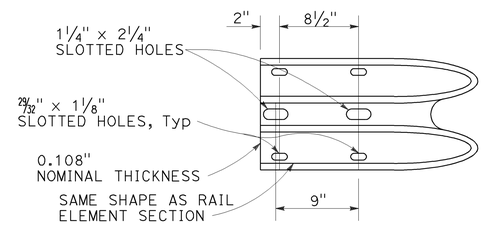

ELEVATION
END CAP
(TYPE A)

BUTTON HEAD BOLT

L	THREAD LENGTH
1⅜"	FULL THREAD LENGTH
2"	FULL THREAD LENGTH
10"	4" Min THREAD LENGTH
18"	4" Min THREAD LENGTH
20"	4" Min THREAD LENGTH
22"	4" Min THREAD LENGTH
26"	4" Min THREAD LENGTH
36"	4" Min THREAD LENGTH
** 2¾"	2" Min THREAD LENGTH
** 19"	4" Min THREAD LENGTH

** For nested rail applications.

STATE OF CALIFORNIA
DEPARTMENT OF TRANSPORTATION

MIDWEST GUARDRAIL SYSTEM STANDARD HARDWARE

NO SCALE

RSP A77M1 DATED JULY 19, 2013 SUPPLEMENTS THE STANDARD PLANS BOOK DATED 2010.

REVISED STANDARD PLAN RSP A77M1

2010 REVISED STANDARD PLAN RSP A77M1

7-3-13

Dist	COUNTY	ROUTE	POST MILES TOTAL PROJECT	SHEET No.	TOTAL SHEETS
08	Riv	74	6.9/10.2	22	28

Randell D. Hiatt
REGISTERED CIVIL ENGINEER

July 19, 2013
PLANS APPROVAL DATE

REGISTERED PROFESSIONAL ENGINEER
Randell D. Hiatt
No. C50200
Exp. 6-30-15
CIVIL
STATE OF CALIFORNIA

THE STATE OF CALIFORNIA OR ITS OFFICERS OR AGENTS SHALL NOT BE RESPONSIBLE FOR THE ACCURACY OR COMPLETENESS OF SCANNED COPIES OF THIS PLAN SHEET.

TO ACCOMPANY PLANS DATED 9-16-13

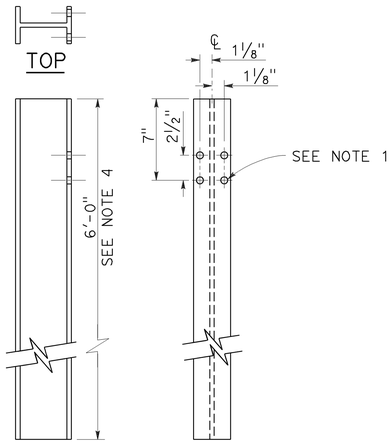

SIDE FRONT

W6 x 9 OR W6 x 8.5
STEEL POST
See Note 4

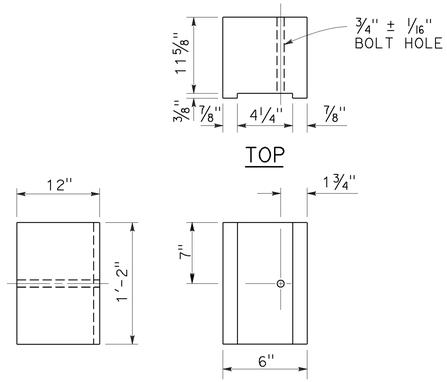

SIDE FRONT

6" x 12"
NOTCHED WOOD BLOCK
See Notes 2 and 3

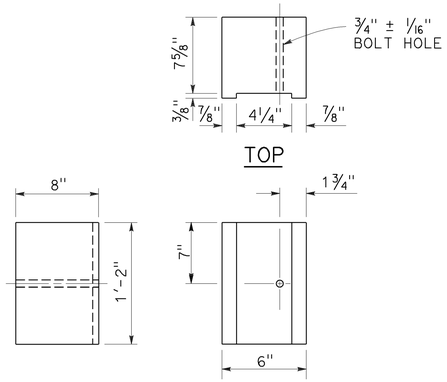

SIDE FRONT

6" x 8"
NOTCHED WOOD BLOCK
Only for use with metal beam guard railing. See Note 5

NOTES:

1. All holes in steel post shall be 13/16" Dia maximum.
2. Dimensions shown for wood block are nominal.
3. Notched face of block faces steel post.
4. 6'-0" length posts to be used for typical roadway installation. 7'-0" length posts to be used for narrow roadway installation. See Revised Standard Plan RSP A77N3.
5. See Revised Standard Plan RSP A77L3 for use of 6" x 8" and 8" x 8" notched wood blocks.
6. This post and 8" x 12" block combination to be used for line post sections of MGS on narrow roadways and where strengthened line post sections of MGS are warranted to shield fixed objects.

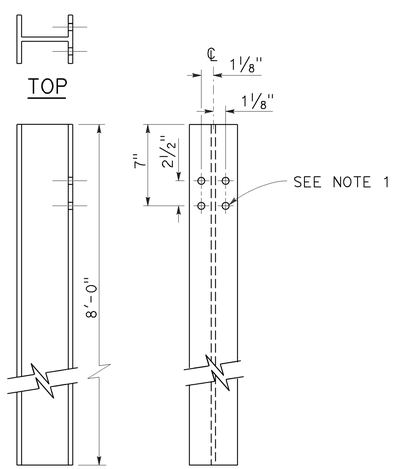

SIDE FRONT

W6 x 15
STEEL POST
See Note 6

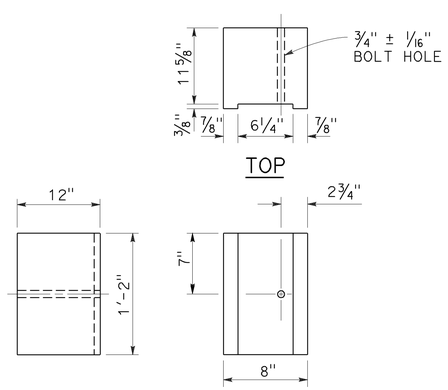

SIDE FRONT

8" x 12"
NOTCHED WOOD BLOCK
See Notes 2 and 3

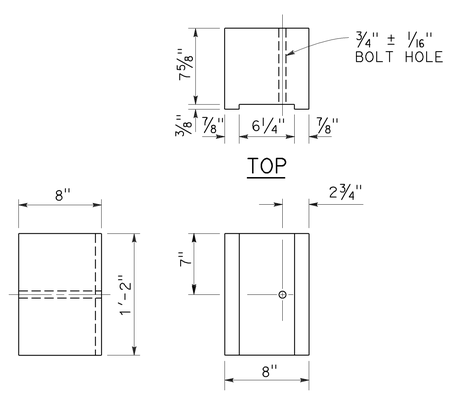

SIDE FRONT

8" x 8"
NOTCHED WOOD BLOCK
Only for use with metal beam guard railing. See Note 5

STATE OF CALIFORNIA
DEPARTMENT OF TRANSPORTATION

MIDWEST GUARDRAIL SYSTEM STEEL POST AND NOTCHED WOOD BLOCK DETAILS

NO SCALE

RSP A77N2 DATED JULY 19, 2013 SUPPLEMENTS THE STANDARD PLANS BOOK DATED 2010.

REVISED STANDARD PLAN RSP A77N2

2010 REVISED STANDARD PLAN RSP A77N2

7-3-13

Dist	COUNTY	ROUTE	POST MILES TOTAL PROJECT	SHEET No.	TOTAL SHEETS
08	Riv	74	6.9/10.2	23	28

Randell D. Hiatt
REGISTERED CIVIL ENGINEER

July 19, 2013
PLANS APPROVAL DATE

REGISTERED PROFESSIONAL ENGINEER
Randell D. Hiatt
No. C50200
Exp. 6-30-15
CIVIL
STATE OF CALIFORNIA

THE STATE OF CALIFORNIA OR ITS OFFICERS OR AGENTS SHALL NOT BE RESPONSIBLE FOR THE ACCURACY OR COMPLETENESS OF SCANNED COPIES OF THIS PLAN SHEET.

TO ACCOMPANY PLANS DATED 9-16-13

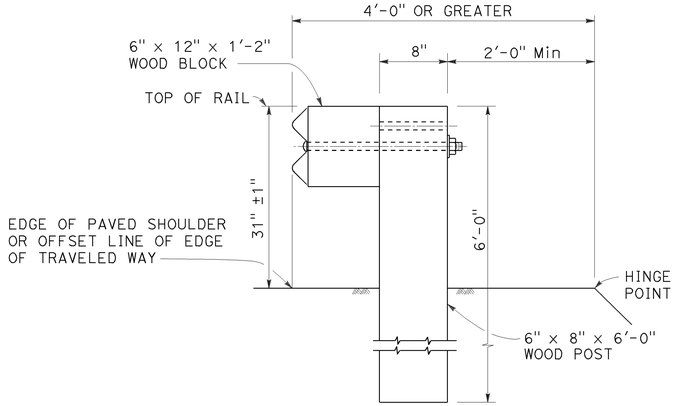

DETAIL A
TYPICAL ROADWAY INSTALLATION
See Note 1

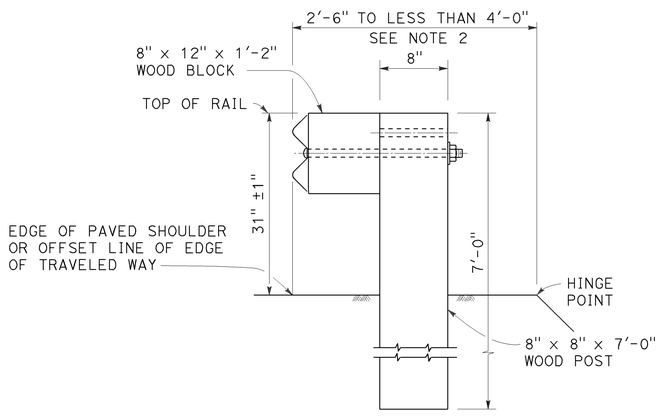

DETAIL B
NARROW ROADWAY INSTALLATION
See Note 1

POST EMBEDMENT

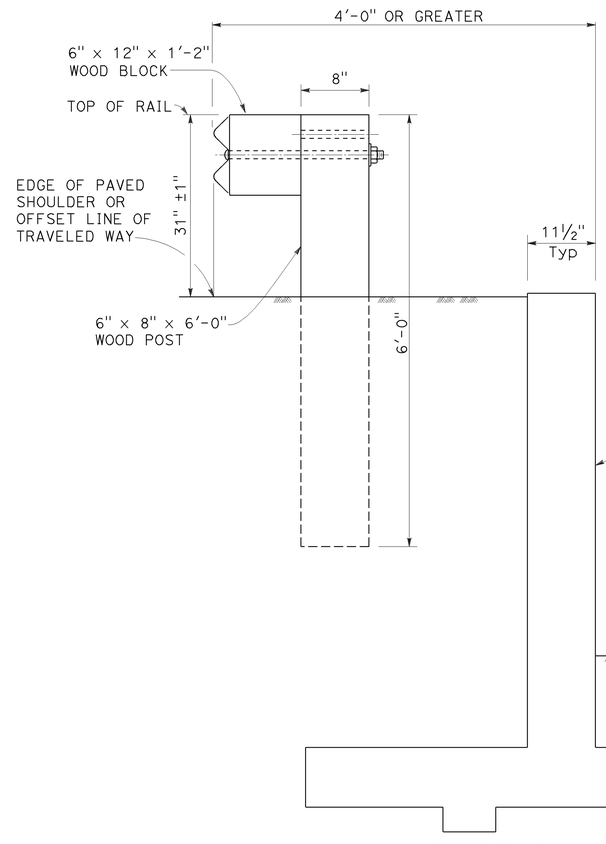

DETAIL C

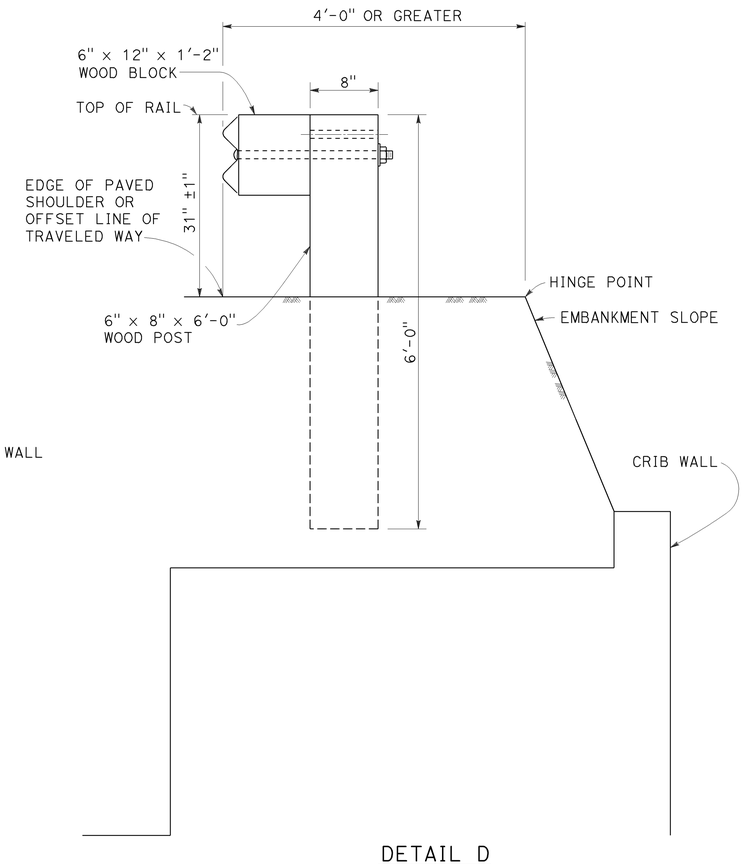

DETAIL D

INSTALLATION AT EARTH RETAINING WALLS

NOTES:

1. These installation details also applicable to steel line post installations. For Detail A, C, and D, where steel line post installations are constructed, W6 x 8.5 or W6 x 9 steel post, 6'-0" in length, with 6" x 12" x 1'-2" notched wood blocks or notched recycled plastic blocks are to be used in place of the size of wood post and wood block shown. For Detail B, where steel line post installations are constructed, or W6 x 15 steel post, 8'-0" in length, with 8" x 12" x 1'-2" notched wood blocks or notched recycled plastic blocks are to be used in place of the size of wood post and wood block shown. For additional installation details, see Revised Standard Plan RSP A77L1 and RSP A77L2.
2. Where the distance between the face of the rail and the hinge point is less than 2'-6", see the Project Plans for special details.
3. For dike positioning with MGS installations, see Revised Standard Plan RSP A77N4.

STATE OF CALIFORNIA
DEPARTMENT OF TRANSPORTATION

MIDWEST GUARDRAIL SYSTEM TYPICAL LINE POST EMBEDMENT AND HINGE POINT OFFSET DETAILS

NO SCALE

RSP A77N3 DATED JULY 19, 2013 SUPPLEMENTS THE STANDARD PLANS BOOK DATED 2010.

REVISED STANDARD PLAN RSP A77N3

2010 REVISED STANDARD PLAN RSP A77N3

7-3-13

Dist	COUNTY	ROUTE	POST MILES TOTAL PROJECT	SHEET No.	TOTAL SHEETS
08	Riv	74	6.9/10.2	24	28

Randell D. Hiatt
REGISTERED CIVIL ENGINEER

July 19, 2013
PLANS APPROVAL DATE

REGISTERED PROFESSIONAL ENGINEER
Randell D. Hiatt
No. C50200
Exp. 6-30-15
CIVIL
STATE OF CALIFORNIA

THE STATE OF CALIFORNIA OR ITS OFFICERS OR AGENTS SHALL NOT BE RESPONSIBLE FOR THE ACCURACY OR COMPLETENESS OF SCANNED COPIES OF THIS PLAN SHEET.

TO ACCOMPANY PLANS DATED 9-16-13

NOTES:

1. When necessary to place dike more than 7" in front of face of MGS, only Type C dike may be used. For dike details, see Revised Standard Plan RSP A87B.
2. For standard railing post embedment, see Revised Standard Plan RSP A77N3.
3. MGS delineation to be used where shown on the Project Plans.
4. When dike or curb is placed under MGS, the maximum height of the dike or curb shall be 6". Mountable dike should not be used. For dike and curb details, see Revised Standard Plans RSP A87A and RSP A87B.
5. For details of typical distance between the face of rail and hinge point, see Revised Standard Plan RSP A77N3.
6. For steel line posts, use 1/4 - 20 self-tapping screws in 0.22" diameter holes or 1/4" bolts in 9/32" diameter holes.

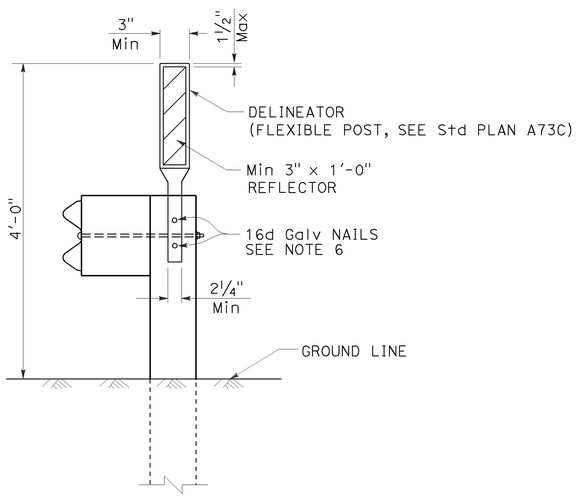

MGS DELINEATION

See Note 3

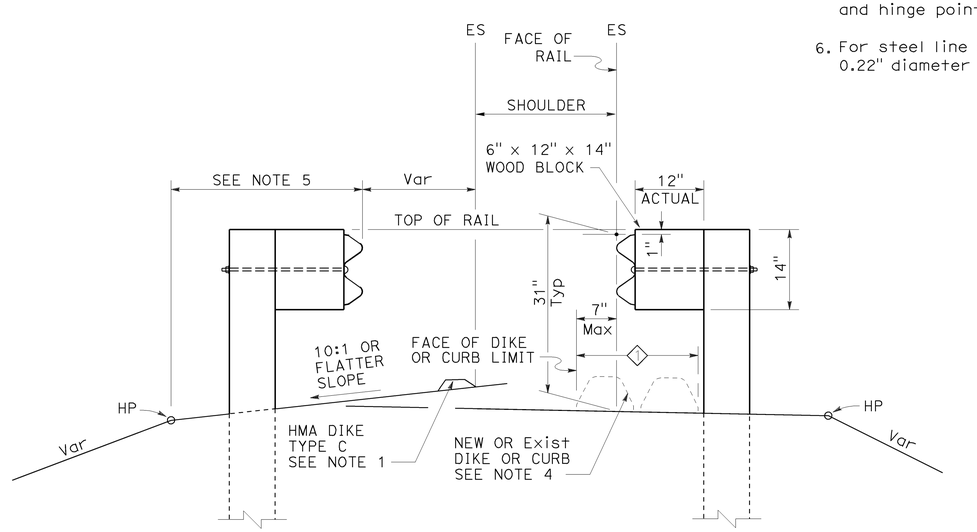

DIKE POSITIONING

See Note 1

1 PERMISSIBLE DIKE OR CURB PLACEMENT AREA

STATE OF CALIFORNIA
DEPARTMENT OF TRANSPORTATION

MIDWEST GUARDRAIL SYSTEM TYPICAL RAILING DELINEATION AND DIKE POSITIONING DETAILS

NO SCALE

RSP A77N4 DATED JULY 19, 2013 SUPPLEMENTS THE STANDARD PLANS BOOK DATED 2010.

REVISED STANDARD PLAN RSP A77N4

2010 REVISED STANDARD PLAN RSP A77N4

7-10-13

Dist	COUNTY	ROUTE	POST MILES TOTAL PROJECT	SHEET No.	TOTAL SHEETS
08	Riv	74	6.9/10.2	25	28

Randell D. Hiatt
REGISTERED CIVIL ENGINEER

July 19, 2013
PLANS APPROVAL DATE

REGISTERED PROFESSIONAL ENGINEER
Randell D. Hiatt
No. C50200
Exp. 6-30-15
CIVIL
STATE OF CALIFORNIA

THE STATE OF CALIFORNIA OR ITS OFFICERS OR AGENTS SHALL NOT BE RESPONSIBLE FOR THE ACCURACY OR COMPLETENESS OF SCANNED COPIES OF THIS PLAN SHEET.

TO ACCOMPANY PLANS DATED 9-16-13

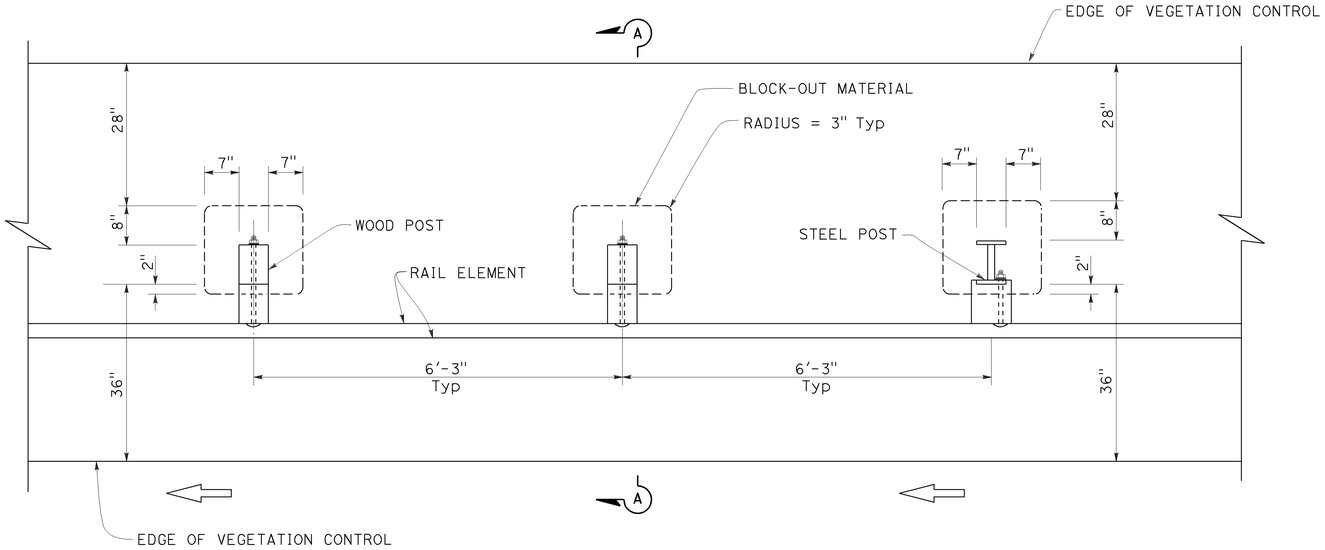

PLAN

NOTES:

1. Where the distance between back of post and hinge point is less than 42", construct vegetation control to 6" from hinge point while maintaining the 8" block-out at back of post. If the 8" block-out at back of post can not be maintained, construct vegetation control flush with the back edge of post.
2. Where dike is constructed under railing, construct vegetation control to back edge of dike. Where paved shoulder is constructed within 36" in front of the post, construct vegetation control to the edge of paved shoulder.
3. For wood post sizes, see Revised Standard Plan RSP A77N1.
4. For steel post sizes, see Revised Standard Plan RSP A77N2.
5. For details not shown, see Revised Standard Plans RSP A77L1 and RSP A77L2.

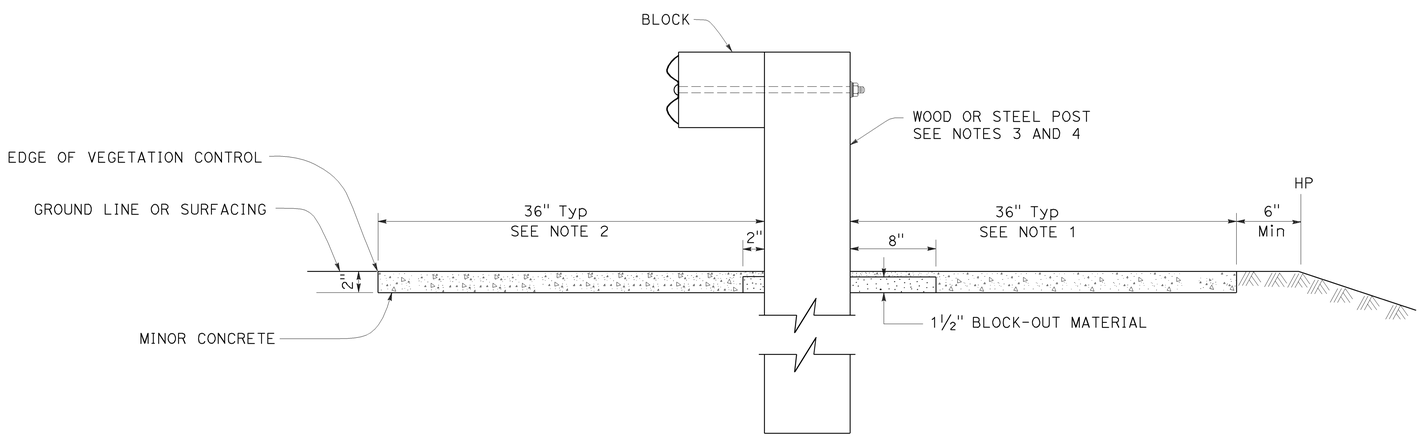

SECTION A-A

STATE OF CALIFORNIA
DEPARTMENT OF TRANSPORTATION

MIDWEST GUARDRAIL SYSTEM TYPICAL VEGETATION CONTROL STANDARD RAILING SECTION

NO SCALE

RSP A77N5 DATED JULY 19, 2013 SUPPLEMENTS THE STANDARD PLANS BOOK DATED 2010.

REVISED STANDARD PLAN RSP A77N5

2010 REVISED STANDARD PLAN RSP A77N5

7-3-13

Dist	COUNTY	ROUTE	POST MILES TOTAL PROJECT	SHEET No.	TOTAL SHEETS
08	Riv	74	6.9/10.2	26	28

Randell D. Hiatt
REGISTERED CIVIL ENGINEER

July 19, 2013
PLANS APPROVAL DATE

REGISTERED PROFESSIONAL ENGINEER
Randell D. Hiatt
No. C50200
Exp. 6-30-15
CIVIL
STATE OF CALIFORNIA

THE STATE OF CALIFORNIA OR ITS OFFICERS OR AGENTS SHALL NOT BE RESPONSIBLE FOR THE ACCURACY OR COMPLETENESS OF SCANNED COPIES OF THIS PLAN SHEET.

TO ACCOMPANY PLANS DATED 9-16-13

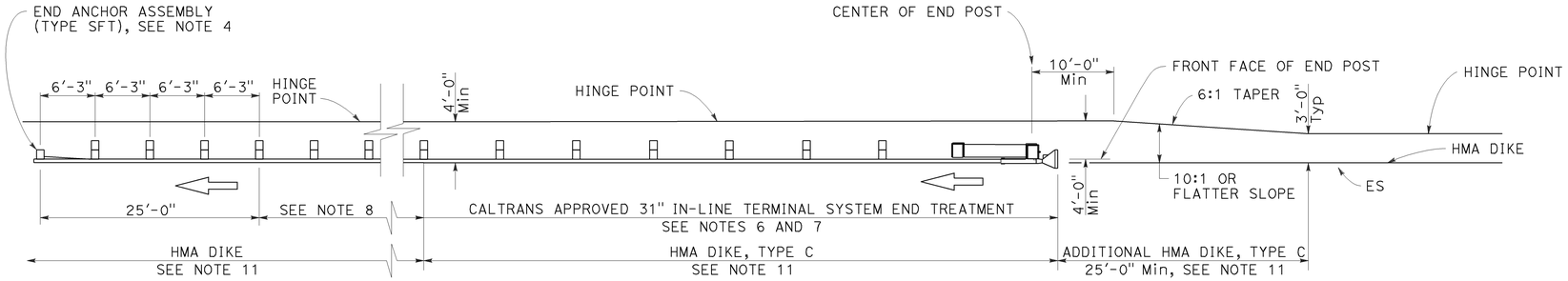

TYPE 11A LAYOUT

(Embankment MGS installation with 31" in-line end treatment at traffic approach end of railing) see Note 5

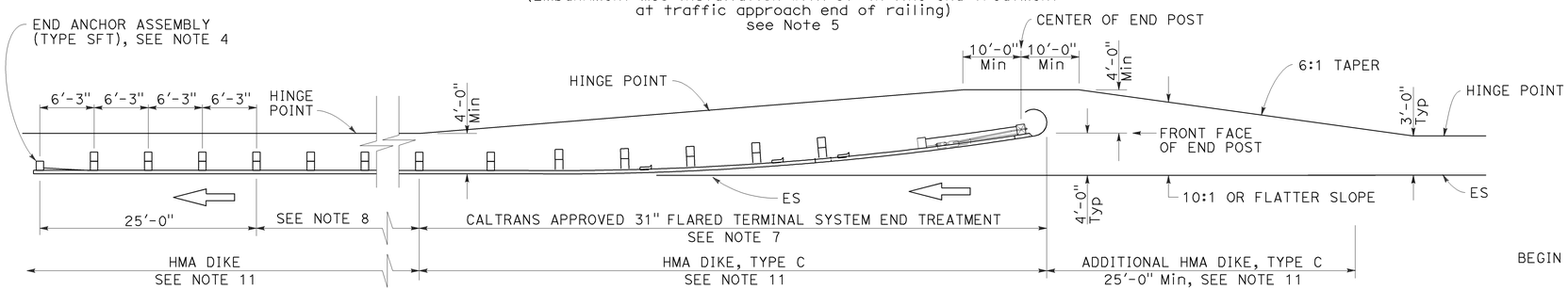

TYPE 11B LAYOUT

(Embankment MGS installation with 31" flared end treatment at traffic approach end of railing) see Note 5

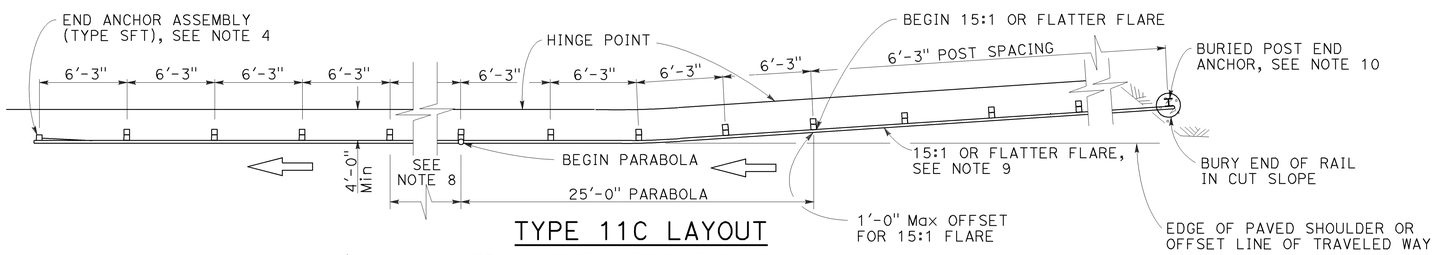

TYPE 11C LAYOUT

(Embankment MGS installation with buried end anchor treatment at traffic approach end of railing) see Notes 5 and 11

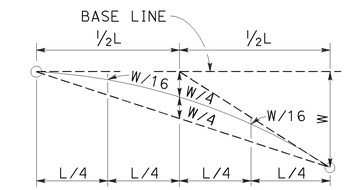

TYPICAL PARABOLIC LAYOUT

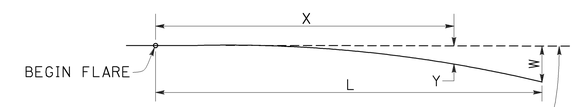

BASE LINE (EDGE OF PAVED SHOULDER OR OFFSET LINE OF EDGE OF TRAVELED WAY)

$$Y = \frac{WX^2}{L^2}$$

Y = OFFSET FROM BASE LINE
W = MAXIMUM OFFSET
X = DISTANCE ALONG BASE LINE
L = LENGTH OF FLARE

PARABOLIC FLARE OFFSETS

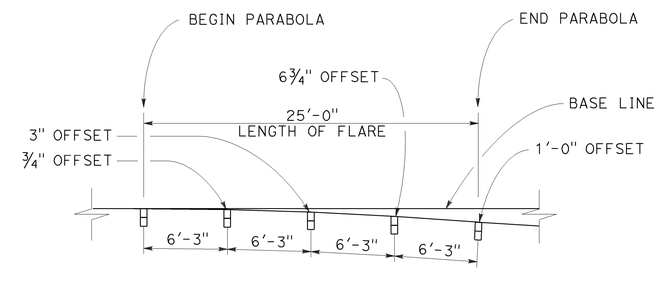

TYPICAL FLARE OFFSETS FOR 1 FOOT Max END OFFSET

STATE OF CALIFORNIA
DEPARTMENT OF TRANSPORTATION

MIDWEST GUARDRAIL SYSTEM TYPICAL LAYOUTS FOR EMBANKMENTS

NO SCALE

RSP A77P1 DATED JULY 19, 2013 SUPPLEMENTS THE STANDARD PLANS BOOK DATED 2010.

REVISED STANDARD PLAN RSP A77P1

2010 REVISED STANDARD PLAN RSP A77P1

NOTES:

1. Line post, blocks and hardware to be used are shown on Revised Standard Plans RSP A77L1, RSP A77L2, RSP A77M1, RSP A77N1 and RSP A77N2.
2. MGS post spacing to be 6'-3" center to center, except as otherwise noted.
3. Except as noted, line posts are 6" x 8" x 6'-0" wood with 6" x 12" x 1'-2" wood blocks. W6 x 8.5 or W6 x 9 steel posts, 6'-0" in length, with 6" x 12" x 1'-2" notched wood blocks or recycled plastic blocks may be used for 6" x 8" x 6'-0" wood post with 6" x 12" x 1'-2" wood blocks where applicable and when specified.
4. For End Anchor Assembly (Type SFT) details, see Revised Standard Plan RSP A77H1.
5. Layout Types 11A, 11B or 11C are typically used where MGS is recommended to shield embankment slopes and a crashworthy end treatment is required for only one direction of traffic.
6. 31" in-line terminal system end treatments are used where site conditions will not accommodate a flared end treatment.
7. The type of 31" terminal system end treatment to be used will be shown on the Project Plans.
8. Dependent on site conditions (embankment height and side slope), construction of additional MGS (length equal to multiples of 12'-6" with 6'-3" post spacing) may be advisable.
9. The 15:1 or flatter flare used with buried end anchors is based on the edge of the paved shoulder or offset line of edge of the traveled way. The length of MGS within the 15:1 or flatter flare is based on site conditions and should be a length equal to multiples of 12'-6".
10. For details of the buried post end anchor used with Type 11C Layout, see Revised Standard Plan RSP A77T2.
11. Where placement of dike is required with MGS installations, see Revised Standard Plan RSP A77N4 for dike positioning details.

6-20-13

Dist	COUNTY	ROUTE	POST MILES TOTAL PROJECT	SHEET No.	TOTAL SHEETS
08	Riv	74	6.9/10.2	27	28

Randell D. Hiatt
REGISTERED CIVIL ENGINEER

July 19, 2013
PLANS APPROVAL DATE

REGISTERED PROFESSIONAL ENGINEER
Randell D. Hiatt
No. C50200
Exp. 6-30-15
CIVIL
STATE OF CALIFORNIA

THE STATE OF CALIFORNIA OR ITS OFFICERS OR AGENTS SHALL NOT BE RESPONSIBLE FOR THE ACCURACY OR COMPLETENESS OF SCANNED COPIES OF THIS PLAN SHEET.

TO ACCOMPANY PLANS DATED 9-16-13

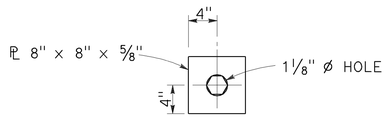

DETAIL "A"
CABLE CONNECTION END PLATE

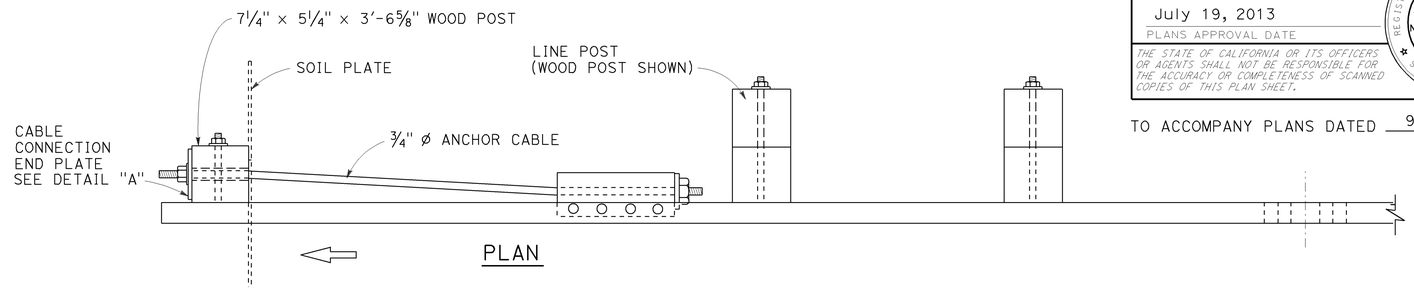

PLAN

TO ACCOMPANY PLANS DATED 9-16-13

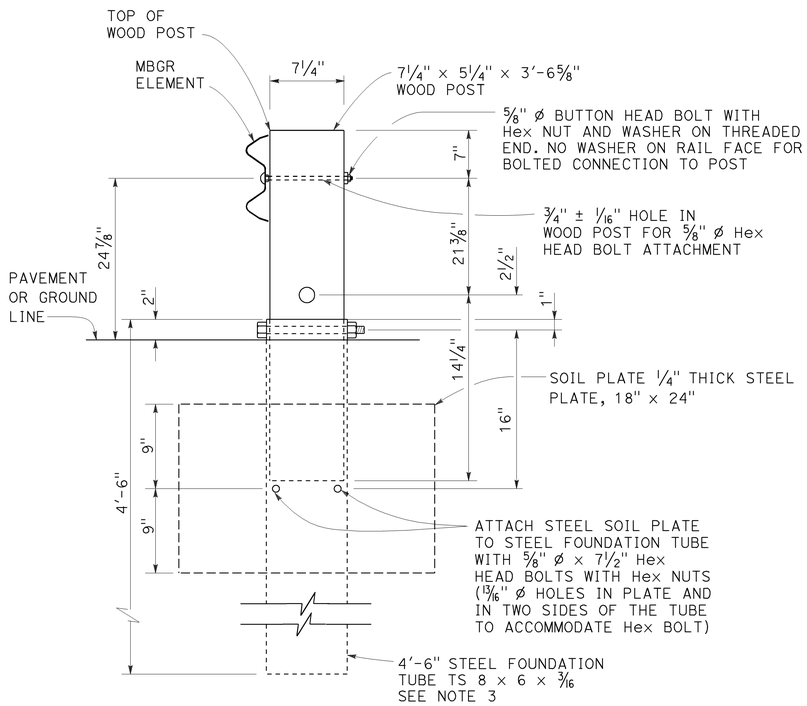

SECTION A-A

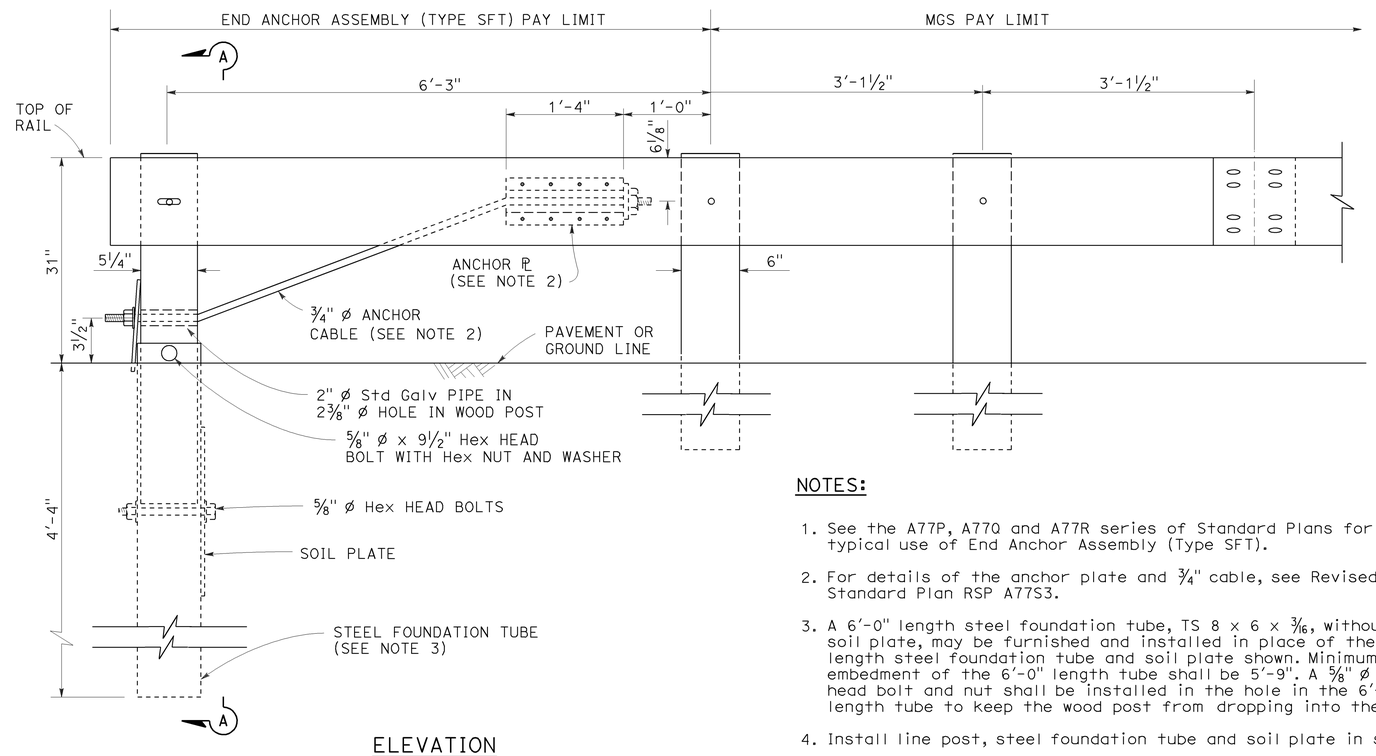

ELEVATION

END ANCHOR
ASSEMBLY (TYPE SFT)
See Note 1

NOTES:

1. See the A77P, A77Q and A77R series of Standard Plans for typical use of End Anchor Assembly (Type SFT).
2. For details of the anchor plate and 3/4" cable, see Revised Standard Plan RSP A77S3.
3. A 6'-0" length steel foundation tube, TS 8 x 6 x 3/16, without a soil plate, may be furnished and installed in place of the 4'-6" length steel foundation tube and soil plate shown. Minimum embedment of the 6'-0" length tube shall be 5'-9". A 5/8" ø Hex head bolt and nut shall be installed in the hole in the 6'-0" length tube to keep the wood post from dropping into the tube.
4. Install line post, steel foundation tube and soil plate in soil.

STATE OF CALIFORNIA
DEPARTMENT OF TRANSPORTATION

MIDWEST GUARDRAIL SYSTEM END ANCHOR ASSEMBLY (TYPE SFT)

NO SCALE

RSP A77S1 DATED JULY 19, 2013 SUPPLEMENTS THE STANDARD PLANS BOOK DATED 2010.

REVISED STANDARD PLAN RSP A77S1

2010 REVISED STANDARD PLAN RSP A77S1

7-3-13

Dist	COUNTY	ROUTE	POST MILES TOTAL PROJECT	SHEET No.	TOTAL SHEETS
08	Riv	74	6.9/10.2	28	28

REGISTERED CIVIL ENGINEER

April 19, 2013
PLANS APPROVAL DATE

REGISTERED PROFESSIONAL ENGINEER Gurinderpal Bhullar No. C48815 Exp. 9-30-14 CIVIL STATE OF CALIFORNIA

THE STATE OF CALIFORNIA OR ITS OFFICERS OR AGENTS SHALL NOT BE RESPONSIBLE FOR THE ACCURACY OR COMPLETENESS OF SCANNED COPIES OF THIS PLAN SHEET.

TO ACCOMPANY PLANS DATED 9-16-13

2010 REVISED STANDARD PLAN RSP T13

NOTES:

See Revised Standard Plan RSP T9 for tables.

Use cone spacing X for taper segment, Y for tangent segment or Z for conflict situations, as approriate, per Table 1, unless X, Y, or Z cone spacing is shown on this sheet.

Unless otherwise specified in the special provisions, all temporary warning signs shall have black legend on fluorescent orange background.

California codes are designated by (CA). Otherwise, Federal (MUTCD) codes are shown.

TYPICAL LANE CLOSURE WITH REVERSIBLE CONTROL

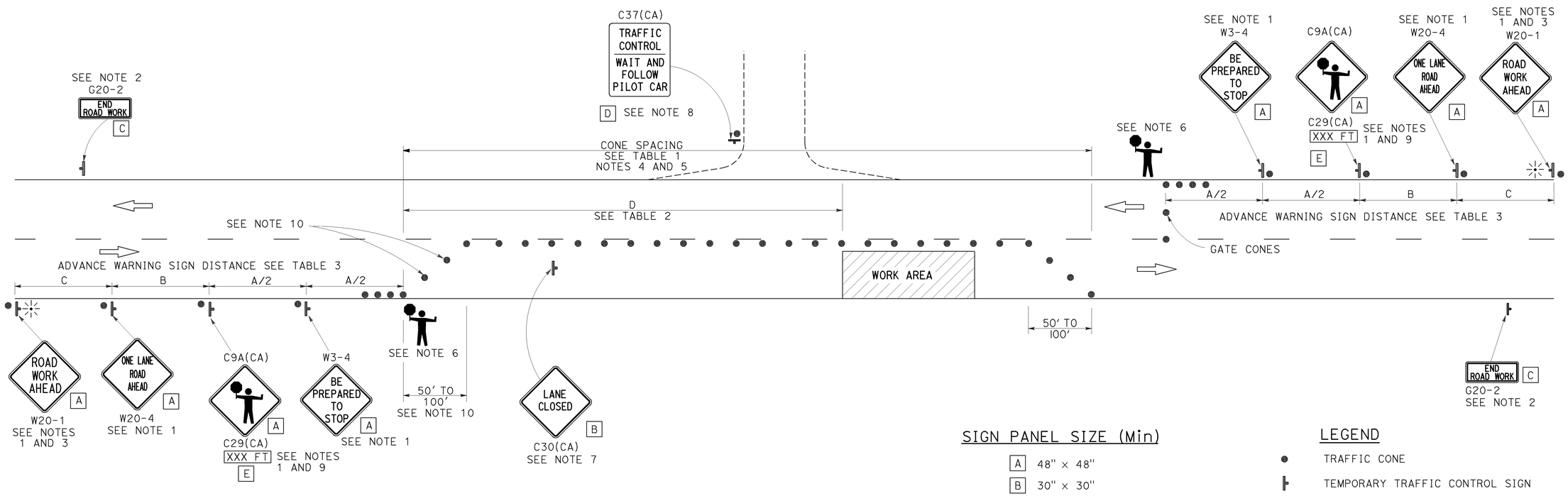

SIGN PANEL SIZE (Min)

A	48" x 48"
B	30" x 30"
C	36" x 18"
D	36" x 42"
E	20" x 7"

LEGEND

- TRAFFIC CONE
- TEMPORARY TRAFFIC CONTROL SIGN
- PORTABLE FLASHING BEACON
- FLAGGER

NOTES:

1. Each advance warning sign in each direction of travel shall be equipped with at least two flags for daytime closure. Each flag shall be at least 16" x 16" in size and shall be orange or fluorescent red-orange in color. Flashing beacons shall be placed at the locations indicated for lane closure during hours of darkness.
2. A G20-2 "END ROAD WORK" sign, as appropriate, shall be placed at the end of the lane control unless the end of work area is obvious, or ends within a larger project's limits.
3. If the W20-1 sign would follow within 2000' of a stationary W20-1 or G20-1 "ROAD WORK NEXT _____ MILES", use a W20-4 sign for the first advance warning sign.
4. All cones used for lane closures during the hours of darkness shall be fitted with retroreflective bands (or sleeves) as specified in the specifications.
5. Portable delineators, placed at one-half the spacing indicated for traffic cones, may be used instead of cones for daytime closures only.
6. Additional advance flaggers may be required. Flagger should stand in a conspicuous place, be visible to approaching traffic as well as approaching vehicles after the first vehicle has stopped. During the hours of darkness, the flagging-station and flagger shall be illuminated and clearly visible to approaching traffic. The illumination footprint of the lighting on the ground shall be at least 20' in diameter. Place a minimum of four cones at 50' intervals in advance of flagger station as shown.
7. Place C30(CA) "LANE CLOSED" sign at 500' to 1000' intervals throughout extended work areas. They are optional if the work area is visible from the flagger station.
8. When a pilot car is used, place a C37(CA) "TRAFFIC CONTROL-WAIT AND FOLLOW PILOT CAR" sign with black legend on white background at all intersections, driveways and alleys without a flagger within traffic control area. Signs shall be clean and visible at all times. Where traffic can not be effectively self-regulated, at least one flagger shall be used at each intersection within traffic control area.
9. An optional C29(CA) sign may be placed below the C9A(CA) sign.
10. Either traffic cones or barricades shall be placed on the taper. Barricades shall be Type I, II, or III.

STATE OF CALIFORNIA
DEPARTMENT OF TRANSPORTATION

TRAFFIC CONTROL SYSTEM FOR LANE CLOSURE ON TWO LANE CONVENTIONAL HIGHWAYS

NO SCALE

RSP T13 DATED APRIL 19, 2013 SUPERSEDES STANDARD PLAN T13 DATED MAY 20, 2011 - PAGE 241 OF THE STANDARD PLANS BOOK DATED 2010.

REVISED STANDARD PLAN RSP T13

4-2-13