Dist	COUNTY	ROUTE	POST MILES TOTAL PROJECT	SHEET No.	TOTAL SHEETS
08	SBd	15	R104.7/154.7	1	17

INDEX OF PLANS

SHEET No.	DESCRIPTION
1	TITLE AND LOCATION MAP
2-3	CONSTRUCTION DETAILS
4	CONSTRUCTION AREA SIGNS
5	PAVEMENT DELINEATION QUANTITIES
6-9	REVISED AND NEW STANDARD PLANS
STRUCTURE PLANS	
10-17	ROUTE 15 BRIDGES (VARIOUS)

THE STANDARD PLANS LIST APPLICABLE TO THIS CONTRACT IS INCLUDED IN THE NOTICE TO BIDDERS AND SPECIAL PROVISIONS BOOK.

STATE OF CALIFORNIA

DEPARTMENT OF TRANSPORTATION

PROJECT PLANS FOR CONSTRUCTION ON

STATE HIGHWAY

IN SAN BERNARDINO COUNTY

FROM 1 MILE EAST OF FIELD ROAD OVERCROSSING TO 1 MILE WEST OF HALLORAN SUMMIT OVERCROSSING

TO BE SUPPLEMENTED BY STANDARD PLANS DATED MAY 2006

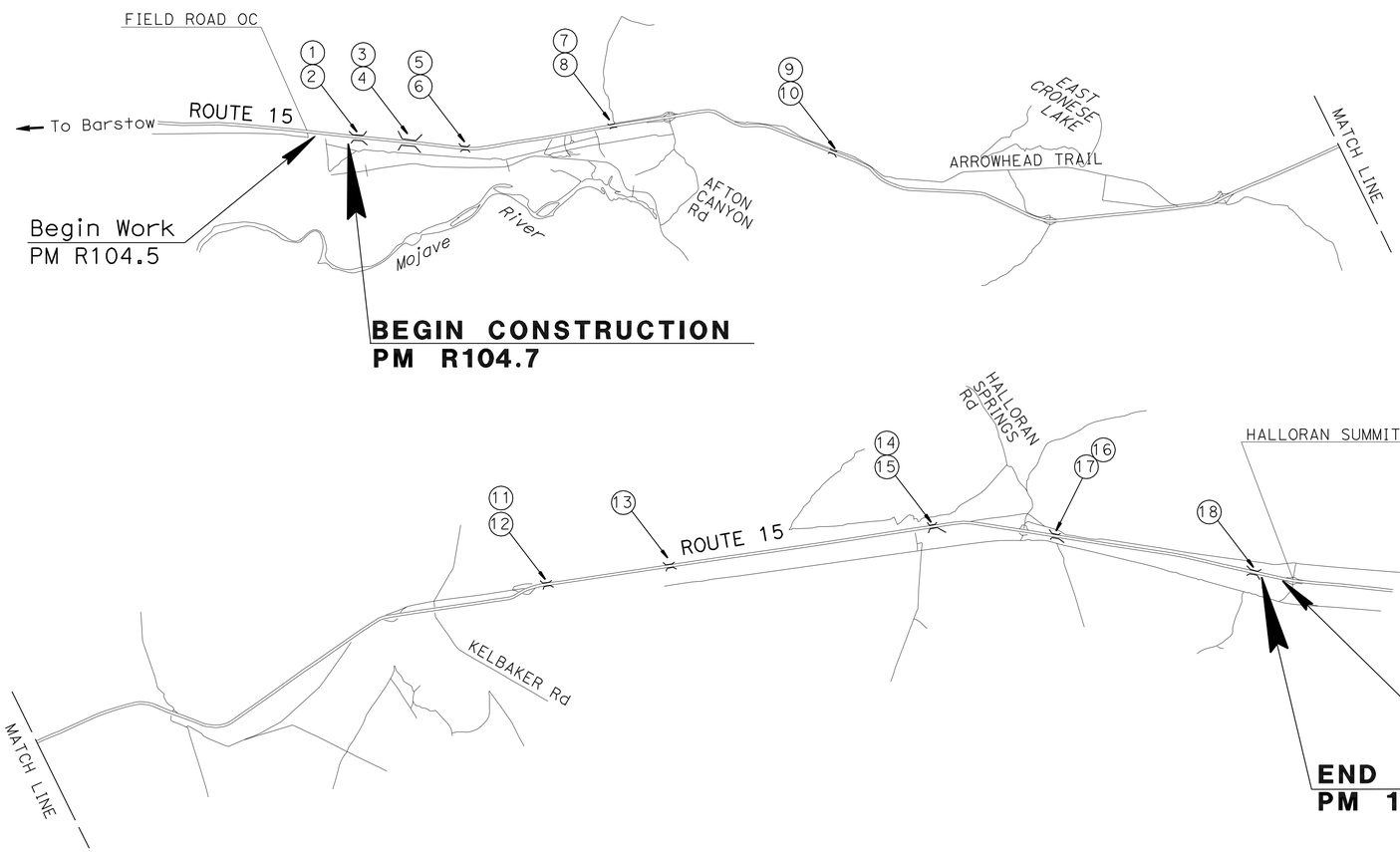

LOCATION MAP

LOCATION OF CONSTRUCTION

No.	BRIDGE No.	BRIDGE NAME	PM	No.	BRIDGE No.	BRIDGE NAME	PM
1	54-0223L	FIELD WASH	R104.77	10	54-0238R	BIRD DITCH	R115.36
2	54-0223R	FIELD WASH	R104.77	11	54-0282L	BERRY DITCH	139.22
3	54-0225L	CADY WASH	R105.97	12	54-0282R	BERRY DITCH	139.22
4	54-0225R	CADY WASH	R105.97	13	54-0283L	HACK WASH	142.26
5	54-0227L	MIDWAY DITCH	R107.12	14	54-0287L	HALLORAN WASH	147.64
6	54-0227R	MIDWAY DITCH	R107.12	15	54-0287R	HALLORAN WASH	147.64
7	54-0233L	TELEPHONE WASH	R110.36	16	54-0288L	DALE DITCH	150.32
8	54-0233R	TELEPHONE WASH	R110.36	17	54-0288R	DALE DITCH	150.32
9	54-0238L	BIRD DITCH	R115.36	18	54-0294R	KALI DITCH	154.68

PROJECT MANAGER CATALINO PINING

DESIGN ENGINEER JAY L. GWIE

8-26-10
PROJECT ENGINEER DATE
REGISTERED CIVIL ENGINEER

REGISTERED PROFESSIONAL ENGINEER JAY L. GWIE No. C36509 Exp. 6-30-12 CIVIL STATE OF CALIFORNIA

November 8, 2010
PLANS APPROVAL DATE

THE STATE OF CALIFORNIA OR ITS OFFICERS OR AGENTS SHALL NOT BE RESPONSIBLE FOR THE ACCURACY OR COMPLETENESS OF SCANNED COPIES OF THIS PLAN SHEET.

THE CONTRACTOR SHALL POSSESS THE CLASS (OR CLASSES) OF LICENSE AS SPECIFIED IN THE "NOTICE TO BIDDERS."

NO SCALE

CONTRACT No.	08-0M2404
PROJECT ID	0800000471

LAST REVISION 08-24-10 DATE PLOTTED => 01-DEC-2010 TIME PLOTTED => 13:01

Dist	COUNTY	ROUTE	POST MILES TOTAL PROJECT	SHEET No.	TOTAL SHEETS
08	SBd	15	R104.7/154.7	2	17

REGISTERED CIVIL ENGINEER 8-26-10 DATE

11-8-10
PLANS APPROVAL DATE

REGISTERED PROFESSIONAL ENGINEER
JAY L. GWIE
No. C36509
Exp 6/30/12
CIVIL
STATE OF CALIFORNIA

THE STATE OF CALIFORNIA OR ITS OFFICERS OR AGENTS SHALL NOT BE RESPONSIBLE FOR THE ACCURACY OR COMPLETENESS OF SCANNED COPIES OF THIS PLAN SHEET.

NOTES:

1. EXACT LOCATIONS OF TEMPORARY FENCE (TYPE ESA) AND TEMPORARY FENCE (TYPE DESERT TORTOISE) WILL BE DETERMINED BY THE ENGINEER.
2. TEMPORARY FENCE (TYPE ESA) SHALL BE PLACED A MAXIMUM OF 10' FROM THE BRIDGE DECK.
3. SEE SHEET C-2 FOR TEMPORARY FENCE (TYPE DESERT TORTOISE) DETAILS.
4. FOR TEMPORARY FENCE (TYPE ESA) DETAILS, SEE NSP T65.

LEGEND:

TEMPORARY FENCE (TYPE DESERT TORTOISE)

TEMPORARY FENCE (TYPE ESA)

BRIDGE

TEMPORARY FENCE QUANTITIES

No.	BRIDGE No.	BRIDGE NAME	PM	TEMPORARY FENCE (TYPE DESERT TORTOISE) (LF)	TEMPORARY FENCE (TYPE ESA) (LF)
1	54-0223L/R	FIELD WASH	R104.77	180'	90'
2	54-0225L/R	CADY WASH	R105.97	220'	110'
3	54-0227L/R	MIDWAY DITCH	R107.12	180'	
4	54-0233L/R	TELEPHONE WASH	R110.36	220'	
5	54-0238L/R	BIRD DITCH	R115.36	180'	
6	54-0282L/R	BERRY DITCH	139.22	200'	
7	54-0283L	HACK WASH	142.26	120'	
8	54-0287L/R	HALLORAN WASH	147.64	400'	
9	54-0288L/R	DALE DITCH	150.32	180'	
10	54-0294R	KALI DITCH	154.68	140'	
TOTAL LENGTH OF EACH FENCE				2020'	200'

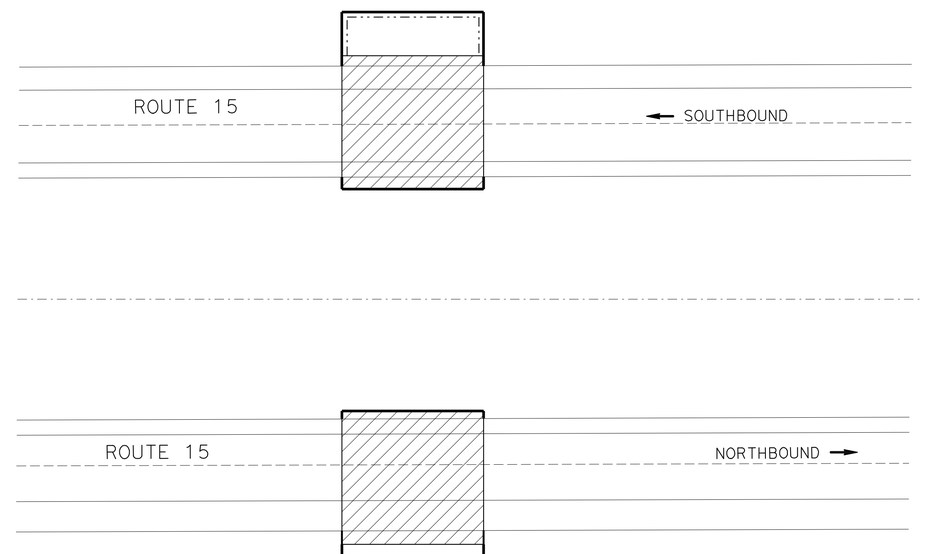

TYPICAL TEMPORARY ESA AND TORTOISE FENCING

WATER POLLUTION CONTROL QUANTITIES

ITEM	QUANTITY	UNIT
TEMPORARY GRAVEL BAG BERM	750	LF
TEMPORARY COVER	3840	SQYD
TEMPORARY CONCRETE WASHOUT BIN	9	EA

CONSTRUCTION DETAILS
NO SCALE

C-1

REVISED BY | DATE REVISED
JAY L. GWIE | MICHAEL RISTIC
CALCULATED-DESIGNED BY | CHECKED BY
FUNCTIONAL SUPERVISOR: MICHAEL RISTIC
STATE OF CALIFORNIA - DEPARTMENT OF TRANSPORTATION
Caltrans MAINTENANCE ENGINEERING

LAST REVISION 08-24-10 | DATE PLOTTED => 09-NOV-2010 | TIME PLOTTED => 14:37

Dist	COUNTY	ROUTE	POST MILES TOTAL PROJECT	SHEET No.	TOTAL SHEETS
08	SBd	15	R104.7/154.7	3	17

REGISTERED CIVIL ENGINEER 8-26-10 DATE

11-8-10
PLANS APPROVAL DATE

REGISTERED PROFESSIONAL ENGINEER JAY L. GWIE No. C36509 Exp 6/30/12 CIVIL STATE OF CALIFORNIA

THE STATE OF CALIFORNIA OR ITS OFFICERS OR AGENTS SHALL NOT BE RESPONSIBLE FOR THE ACCURACY OR COMPLETENESS OF SCANNED COPIES OF THIS PLAN SHEET.

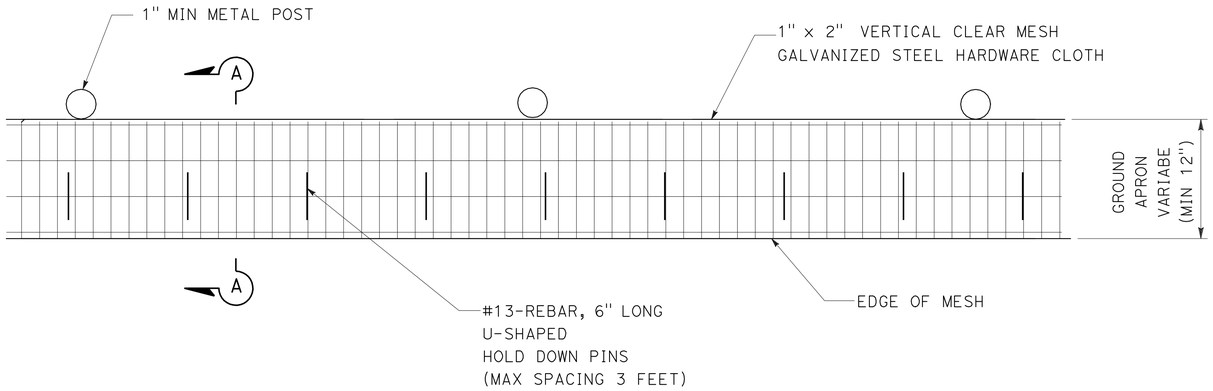

PLAN VIEW

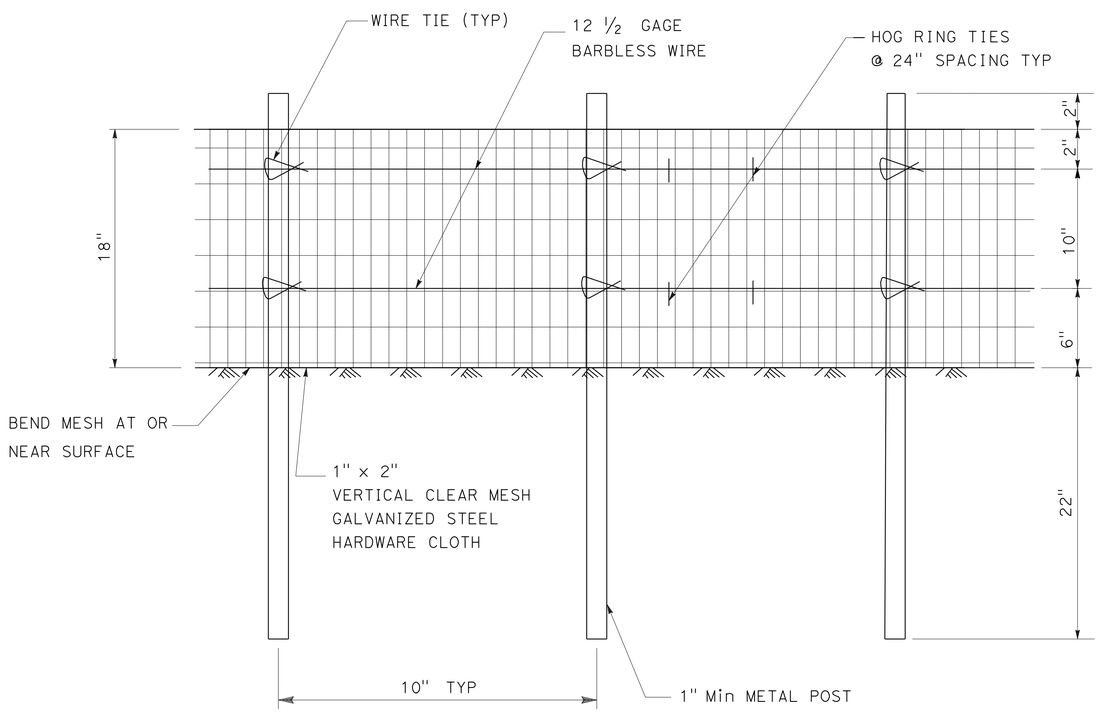

FRONT VIEW

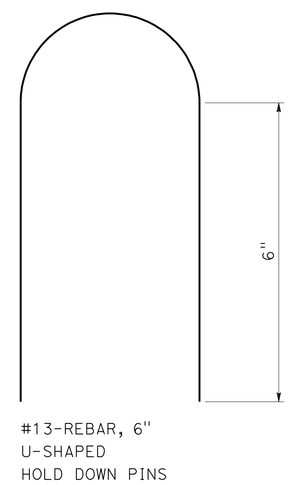

PIN DETAIL

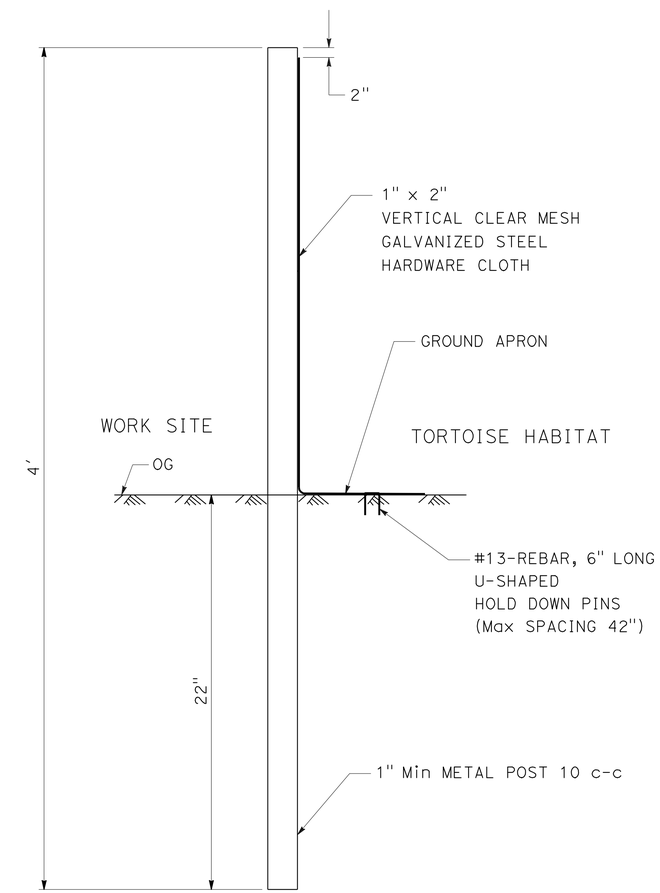

SECTION A-A

CONSTRUCTION DETAILS
TEMPORARY FENCE
(TYPE DESERT TORTOISE)

NO SCALE

C-2

STATE OF CALIFORNIA - DEPARTMENT OF TRANSPORTATION
Caltrans® MAINTENANCE ENGINEERING

FUNCTIONAL SUPERVISOR: MICHAEL RISTIC
CALCULATED-DESIGNED BY: JAY L. GWIE
CHECKED BY: MICHAEL RISTIC
REVISED BY
DATE REVISED

LAST REVISION 08-24-10
DATE PLOTTED => 09-NOV-2010
TIME PLOTTED => 14:37

Dist	COUNTY	ROUTE	POST MILES TOTAL PROJECT	SHEET No.	TOTAL SHEETS
08	SBd	15	R104.7/154.7	4	17

Thanh Trinh 8-26-10
REGISTERED CIVIL ENGINEER DATE

11-8-10
PLANS APPROVAL DATE

REGISTERED PROFESSIONAL ENGINEER
THANH TRINH
No. C41189
Exp. 3/31/11
CIVIL
STATE OF CALIFORNIA

THE STATE OF CALIFORNIA OR ITS OFFICERS OR AGENTS SHALL NOT BE RESPONSIBLE FOR THE ACCURACY OR COMPLETENESS OF SCANNED COPIES OF THIS PLAN SHEET.

NOTES:

1. LOCATIONS OF CONSTRUCTION AREA SIGNS SHOWN ARE APPROXIMATE.
2. EXACT LOCATIONS TO BE DETERMINED BY THE ENGINEER.

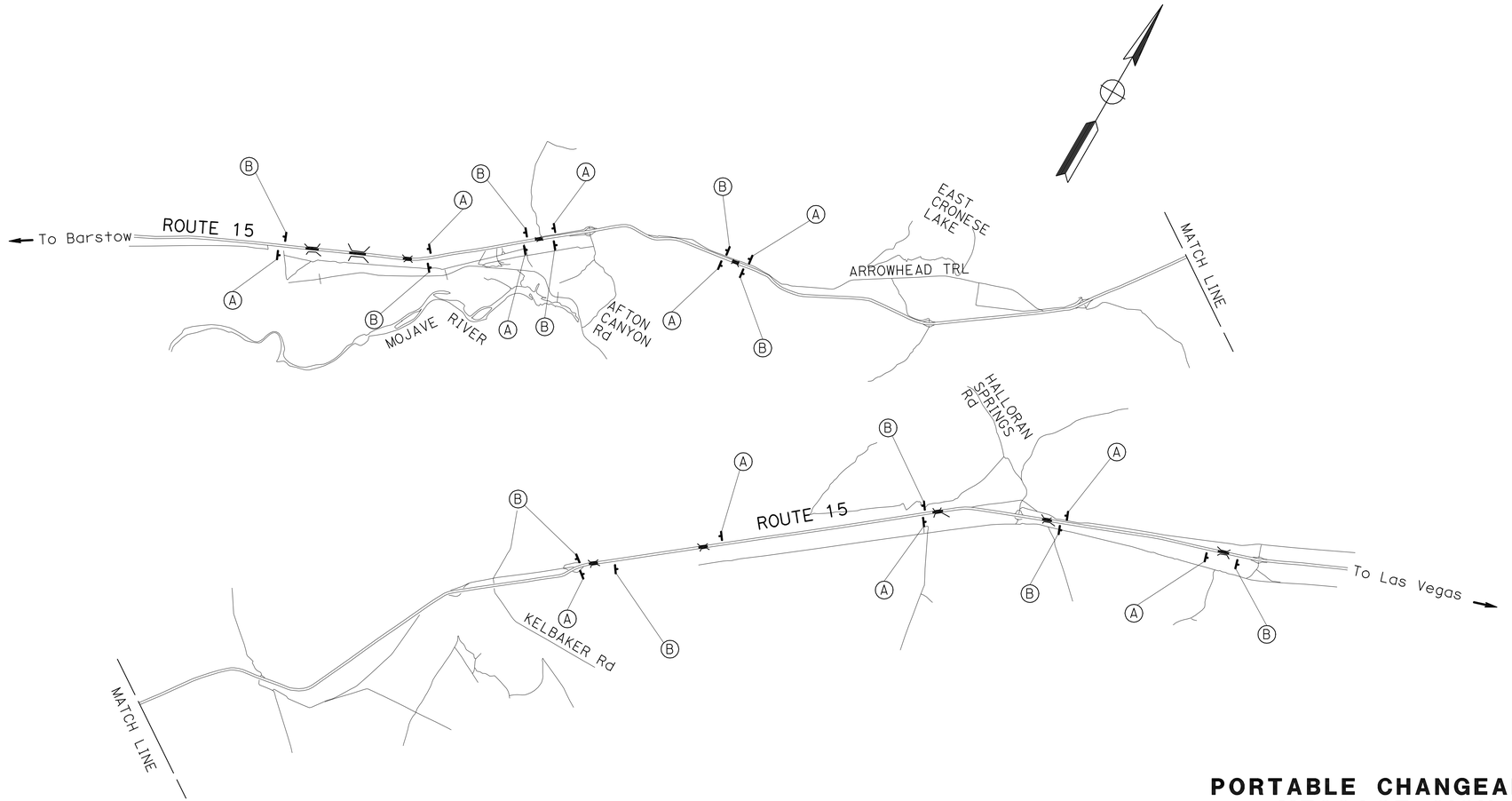

STATIONARY MOUNTED CONSTRUCTION AREA SIGNS

SIGN No.	SIGN CODE	PANEL SIZE	SIGN MESSAGE	No. OF POST AND SIZE	No. OF SIGNS
A	W20-1	48" X 48"	ROAD WORK AHEAD	1 - 6" X 6"	11
B	G20-2	36" X 18"	END ROAD WORK	1 - 4" X 4"	11

PORTABLE CHANGEABLE MESSAGE SIGN

EA
2

THIS PLAN ACCURATE FOR CONSTRUCTION AREA SIGN WORK ONLY.

CONSTRUCTION AREA SIGNS
NO SCALE

CS-1

STATE OF CALIFORNIA - DEPARTMENT OF TRANSPORTATION
Caltrans
TRAFFIC DESIGN

FUNCTIONAL SUPERVISOR: BILL WASSER
CALCULATED-DESIGNED BY: PHIL VU
CHECKED BY: THANH TRINH
REVISED BY
DATE REVISED

LAST REVISION 08-24-10
DATE PLOTTED => 09-NOV-2010
TIME PLOTTED => 11:16

Dist	COUNTY	ROUTE	POST MILES TOTAL PROJECT	SHEET No.	TOTAL SHEETS
08	SBd	15	R104.7/154.7	5	17

REGISTERED CIVIL ENGINEER 8-26-10 DATE

11-8-10
PLANS APPROVAL DATE

REGISTERED PROFESSIONAL ENGINEER
JAY L. GWIE
No. C36509
Exp. 6/30/12
CIVIL
STATE OF CALIFORNIA

THE STATE OF CALIFORNIA OR ITS OFFICERS OR AGENTS SHALL NOT BE RESPONSIBLE FOR THE ACCURACY OR COMPLETENESS OF SCANNED COPIES OF THIS PLAN SHEET.

PAVEMENT DELINEATION QUANTITIES

LOCATION	DETAIL No.	REMOVE PAVEMENT MARKER	REMOVE THERMOPLASTIC TRAFFIC STRIPE		PAVEMENT MARKER RETROREFLECTIVE		THERMOPLASTIC TRAFFIC STRIPE (SPRAYABLE)	
			4 in WHITE	4 in YELLOW	TYPE G	TYPE H	4 in WHITE	4 in YELLOW
		EA	LF		EA		LF	
ROUTE 15 EB	12	25	150		25		600	
	25	25		600		25		600
	27B		600				600	
ROUTE 15 WB	12	25	150		25		600	
	25	25		600		25		600
	27B		600				600	
SUBTOTAL					50	50	2400	1200
TOTAL		100	1500	1200	100		3600	

STATE OF CALIFORNIA - DEPARTMENT OF TRANSPORTATION
Caltrans MAINTENANCE ENGINEERING

FUNCTIONAL SUPERVISOR: MICHAEL RISTIC

CALCULATED-DESIGNED BY: JAY L. GWIE
CHECKED BY: MICHAEL RISTIC

REVISED BY
DATE REVISED

PAVEMENT DELINEATION QUANTITIES
PDQ-1

LAST REVISION 08-24-10
DATE PLOTTED => 09-NOV-2010
TIME PLOTTED => 11:16

DIST	COUNTY	ROUTE	POST MILES TOTAL PROJECT	SHEET NO.	TOTAL SHEETS
08	SBd	15	R104.7/154.7	6	17

Randell D. Hiatt
REGISTERED CIVIL ENGINEER

June 6, 2008
PLANS APPROVAL DATE

REGISTERED PROFESSIONAL ENGINEER
Randell D. Hiatt
No. C50200
Exp. 6-30-09
CIVIL
STATE OF CALIFORNIA

The State of California or its officers or agents shall not be responsible for the accuracy or completeness of electronic copies of this plan sheet.

To accompany plans dated 11-8-10

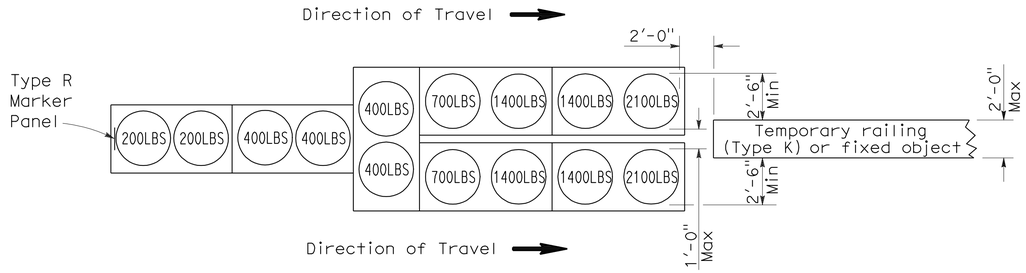

ARRAY 'TU14'

Approach speed 45 mph or more

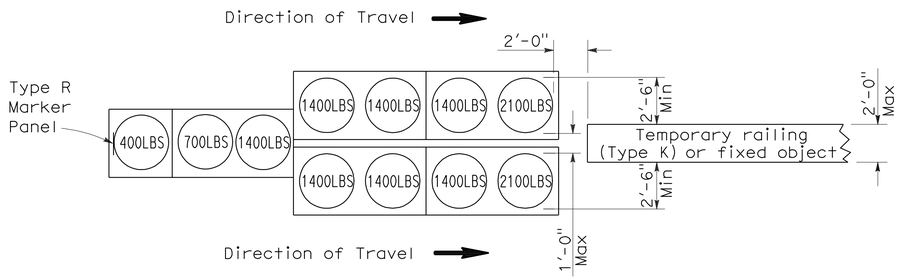

ARRAY 'TU11'

Approach speed less than 45 mph

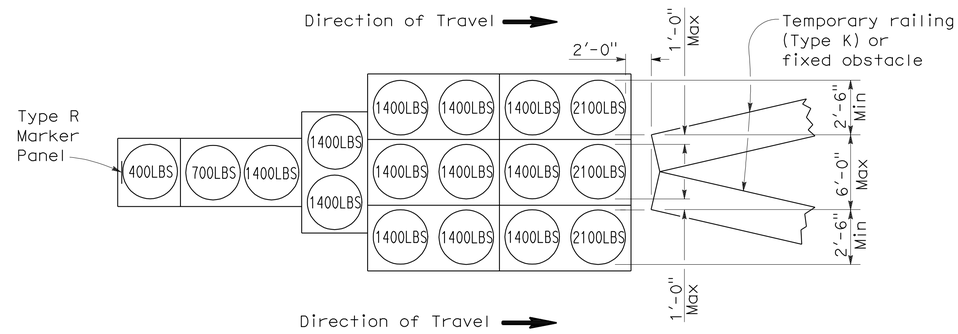

ARRAY 'TU17'

Approach speed less than 45 mph

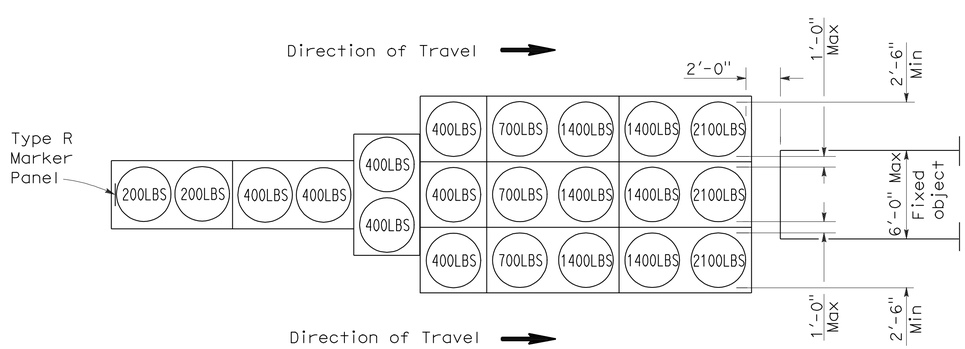

ARRAY 'TU21'

Approach speed 45 mph or more

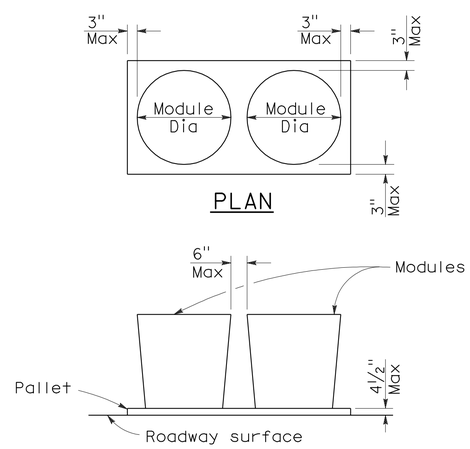

PLAN

ELEVATION

CRASH CUSHION PALLET DETAIL

See Note 7

NOTES:

1. (XXX) Indicates sand filled module location and weight of sand in pounds for each module. Module spacing is based on the greater diameter of the module.
2. All sand weights are nominal.
3. Temporary crash cushion arrays shall not encroach on the traveled way.
4. Place the top of Type R marker panel 1" below the module lid.
5. Refer to Standard Plan A73B for marker details.
6. Approach speeds indicated conform to NCHRP 350 Report criteria.
7. Use of pallets is optional.

STATE OF CALIFORNIA
DEPARTMENT OF TRANSPORTATION

TEMPORARY CRASH CUSHION, SAND FILLED (UNIDIRECTIONAL)

NO SCALE

RSP T1A DATED JUNE 6, 2008 SUPERSEDES STANDARD PLAN T1A
DATED MAY 1, 2006 - PAGE 211 OF THE STANDARD PLANS BOOK DATED MAY 2006.

REVISED STANDARD PLAN RSP T1A

2006 REVISED STANDARD PLAN RSP T1A

DIST	COUNTY	ROUTE	POST MILES TOTAL PROJECT	SHEET NO.	TOTAL SHEETS
08	SBd	15	R104.7/154.7	7	17

Randell D. Hiatt
REGISTERED CIVIL ENGINEER

June 6, 2008
PLANS APPROVAL DATE

REGISTERED PROFESSIONAL ENGINEER
Randell D. Hiatt
No. C50200
Exp. 6-30-09
CIVIL
STATE OF CALIFORNIA

The State of California or its officers or agents shall not be responsible for the accuracy or completeness of electronic copies of this plan sheet.

To accompany plans dated 11-8-10

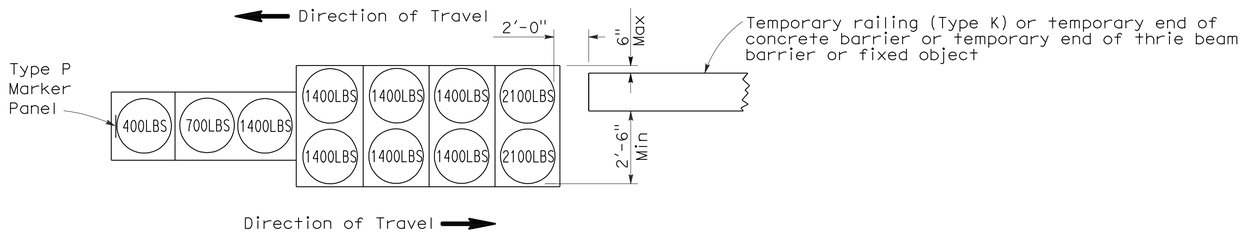

ARRAY 'TB11'

Approach speed less than 45 mph

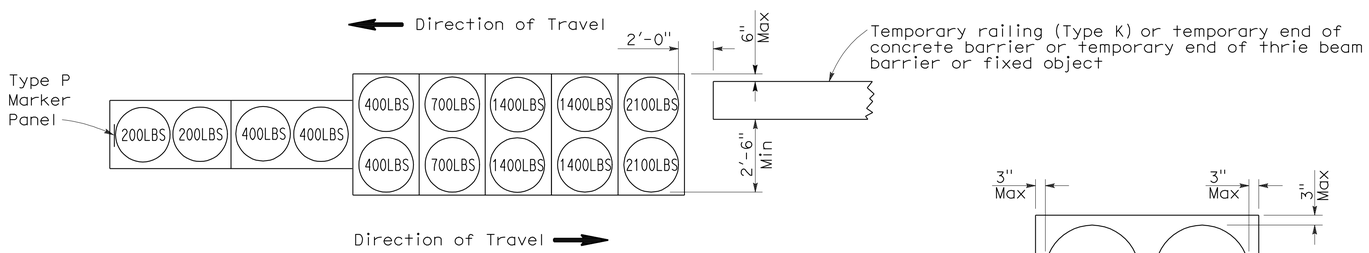

ARRAY 'TB14'

Approach speed 45 mph or more

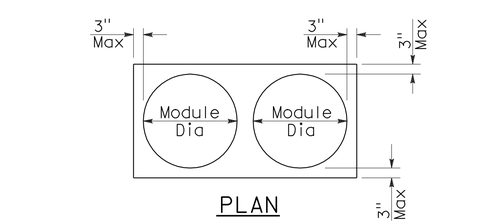

PLAN

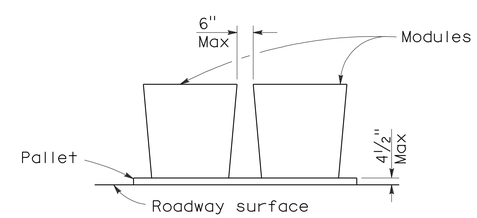

ELEVATION

CRASH CUSHION PALLET DETAIL

See Note 7

NOTES:

1. (XXX) Indicates sand filled module location and weight of sand in pounds for each module. Module spacing is based on the greater diameter of the module.
2. All sand weights are nominal.
3. Temporary crash cushion arrays shall not encroach on the traveled way.
4. Place the Type P marker panel so that the bottom of the panel rests upon the pallet.
5. Refer to Standard Plan A73B for marker details.
6. Approach speeds indicated conform to NCHRP 350 Report criteria.
7. Use of pallets is optional.

STATE OF CALIFORNIA
DEPARTMENT OF TRANSPORTATION

TEMPORARY CRASH CUSHION, SAND FILLED (BIDIRECTIONAL)

NO SCALE

RSP T1B DATED JUNE 6, 2008 SUPERSEDES STANDARD PLAN T1B
DATED MAY 1, 2006 - PAGE 212 OF THE STANDARD PLANS BOOK DATED MAY 2006.

REVISED STANDARD PLAN RSP T1B

2006 REVISED STANDARD PLAN RSP T1B

DIST	COUNTY	ROUTE	POST MILES TOTAL PROJECT	SHEET NO.	TOTAL SHEETS
08	SBd	15	R104.7/154.7	8	17

Randell D. Hiatt
REGISTERED CIVIL ENGINEER

June 6, 2008
PLANS APPROVAL DATE

REGISTERED PROFESSIONAL ENGINEER
Randell D. Hiatt
No. C50200
Exp. 6-30-09
CIVIL
STATE OF CALIFORNIA

The State of California or its officers or agents shall not be responsible for the accuracy or completeness of electronic copies of this plan sheet.

To accompany plans dated 11-8-10

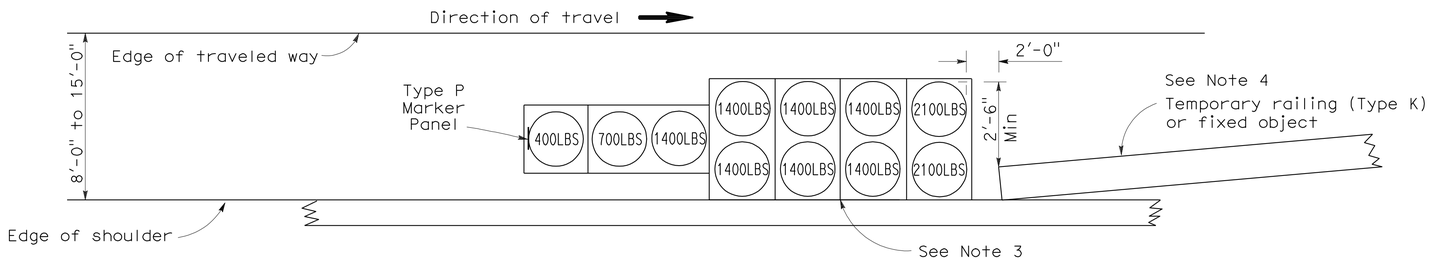

ARRAY 'TS11'

Approach speed less than 45 mph
See Note 9

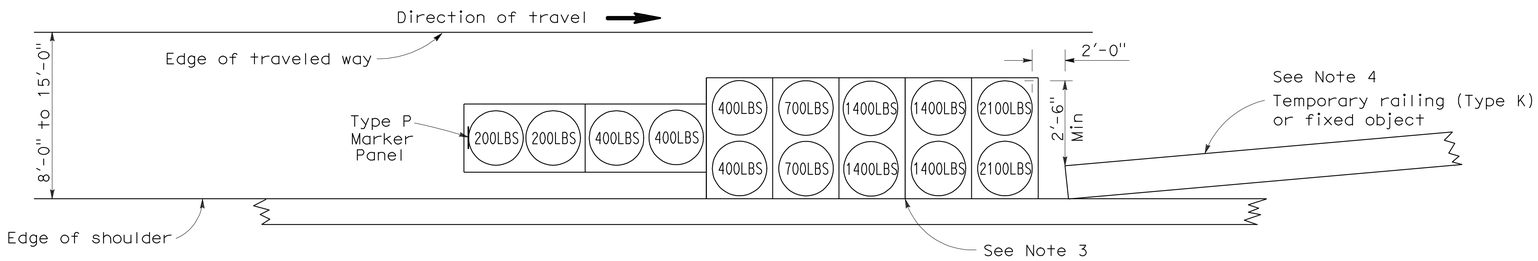

ARRAY 'TS14'

Approach speed 45 mph or more
See Note 9

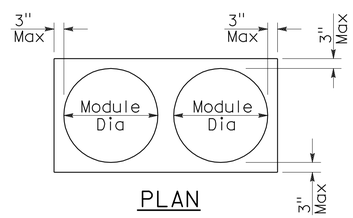

PLAN

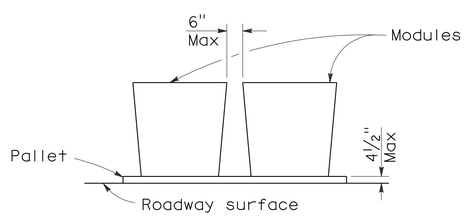

ELEVATION

CRASH CUSHION PALLET DETAIL

See Note 11

NOTES:

1. (XXX) Indicates sand filled module location and weight of sand in pounds for each module. Module spacing is based on the greater diameter of the module.
2. All sand weights are nominal.
3. The temporary crash cushion arrays shown on this plan shall be used only in locations where there will be traffic on one side of the temporary crash cushion array.
4. If the fixed object or approach end of the temporary railing is less than 15'-0" from the edge of traveled way, a temporary crash cushion is required in a construction or work zone.
5. Temporary crash cushion arrays shall not encroach on the traveled way.
6. Arrays for median shoulders shall conform to details shown on this plan for outside shoulders.
7. Place the Type P marker panel so that the bottom of the panel rests upon the pallet and faces traffic.
8. Refer to Standard Plan A73B for marker details.
9. For shoulder widths less than 8'-0", appropriate approved crash cushion protection, other than sand filled modules, shall be provided at fixed objects and at approach ends of temporary railing. The specific type of crash cushion shall be as shown on the project plans or as specified in the Special Provisions, or if not shown on the project plans or specified in the Special Provisions, shall be as approved by the Engineer.
10. Approach speeds indicated conform to NCHRP 350 Report criteria.
11. Use of pallets is optional.

STATE OF CALIFORNIA
DEPARTMENT OF TRANSPORTATION

TEMPORARY CRASH CUSHION, SAND FILLED (SHOULDER INSTALLATIONS)

NO SCALE

RSP T2 DATED JUNE 6, 2008 SUPERSEDES STANDARD PLAN T2
DATED MAY 1, 2006 - PAGE 213 OF THE STANDARD PLANS BOOK DATED MAY 2006.

REVISED STANDARD PLAN RSP T2

2006 REVISED STANDARD PLAN RSP T2

DIST	COUNTY	ROUTE	POST MILES TOTAL PROJECT	SHEET NO.	TOTAL SHEETS
08	SBd	15	R104.7/154.7	9	17

LICENSED LANDSCAPE ARCHITECT

April 3, 2009
PLANS APPROVAL DATE

LICENSED LANDSCAPE ARCHITECT
Robert B. Schott 3025
Signature
11-30-10
Renewal Date
2-25-09
Date
STATE OF CALIFORNIA

The State of California or its officers or agents shall not be responsible for the accuracy or completeness of electronic copies of this plan sheet.

To accompany plans dated 11-8-10

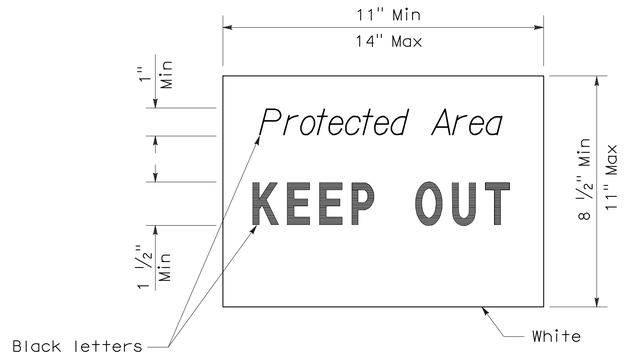

SIGN DETAIL

NOTE:

1. Temporary silt fence and temporary straw bale barrier shown for reference purposes only.

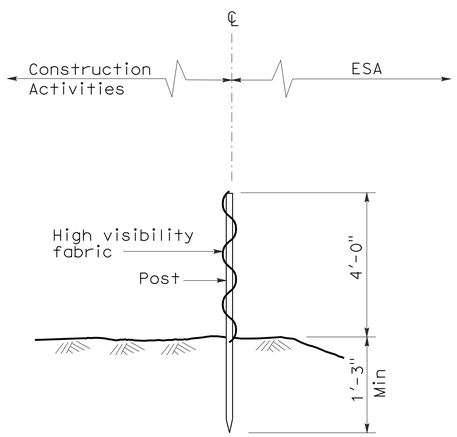

SECTION
TEMPORARY FENCE (TYPE ESA)

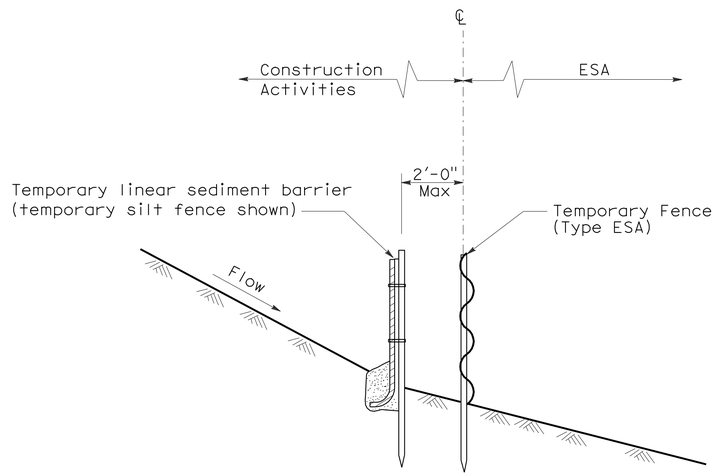

SECTION
PLACEMENT DETAIL
FOR TEMPORARY LINEAR SEDIMENT BARRIER
USED WITH TEMPORARY
FENCE (TYPE ESA)
(See Note 1)

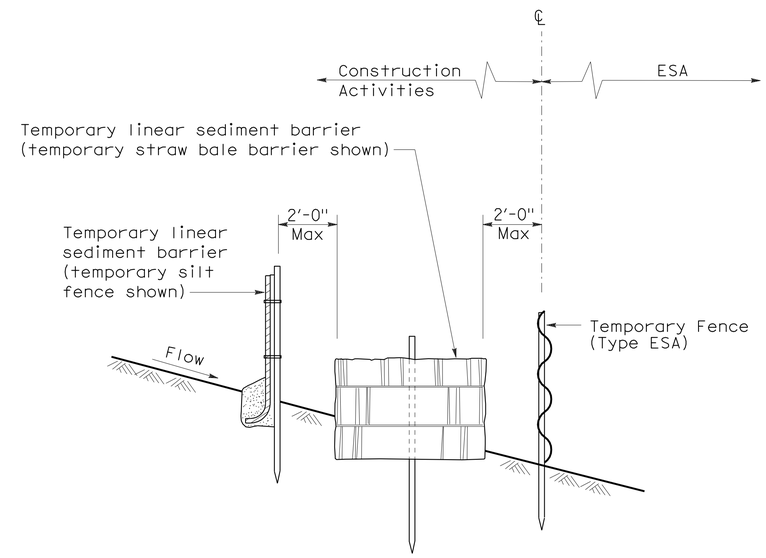

SECTION
PLACEMENT DETAIL
FOR TEMPORARY SILT FENCE
AND TEMPORARY STRAW BALE BARRIER
USED WITH TEMPORARY FENCE (TYPE ESA)
(See Note 1)

STATE OF CALIFORNIA
DEPARTMENT OF TRANSPORTATION

TEMPORARY WATER POLLUTION CONTROL DETAILS [TEMPORARY FENCE (TYPE ESA)]

NO SCALE

NSP T65 DATED APRIL 3, 2009 SUPPLEMENTS
THE STANDARD PLANS BOOK DATED MAY 2006.

NEW STANDARD PLAN NSP T65

2006 NEW STANDARD PLAN NSP T65

DIST	COUNTY	ROUTE	POST MILES TOTAL PROJECT	SHEET No	TOTAL SHEETS
08	SBd	15	R104.7/154.7	10	17

Edward Li 08/17/10
REGISTERED CIVIL ENGINEER DATE

11-8-10
PLANS APPROVAL DATE

The State of California or its officers or agents shall not be responsible for the accuracy or completeness of electronic copies of this plan sheet.

REGISTERED PROFESSIONAL ENGINEER EDWARD GUOJUN LI No. C56706 Exp. 06/30/11 CIVIL STATE OF CALIFORNIA

INDEX TO PLANS

SHEET NO.	TITLE
1	GENERAL PLAN NO. 1
2	GENERAL PLAN NO. 2
3	GENERAL PLAN NO. 3
4	GENERAL PLAN NO. 4
5	GENERAL PLAN NO. 5
6	BRIDGE REMOVAL (PORTION)
7	MISCELLANEOUS DETAILS NO. 1
8	MISCELLANEOUS DETAILS NO. 2

STANDARD PLANS DATED MAY 2006

SHEET NO.	TITLE
A10A	ACRONYMS AND ABBREVIATIONS (SHEET 1 OF 2)
A10B	ACRONYMS AND ABBREVIATIONS (SHEET 2 OF 2)
A10C	SYMBOLS (SHEET 1 OF 2)
A10D	SYMBOLS (SHEET 2 OF 2)

STANDARD PLAN SHEET NO.

DETAIL NO.

LEGEND:

Indicates existing.

Indicates direction of traffic.

Indicates limits of remove existing 1" polyester overlay and replace with new ¾" polyester overlay.

Indicates longitudinal joints between deck units and new transverse connectors. Install two (2) per joint per span, see "MISCELLANEOUS DETAILS NO. 1" sheet.

Indicates location for removing and replacing existing bearing material with new elastomeric bearing pads, see "MISCELLANEOUS DETAILS NO. 2" sheet.

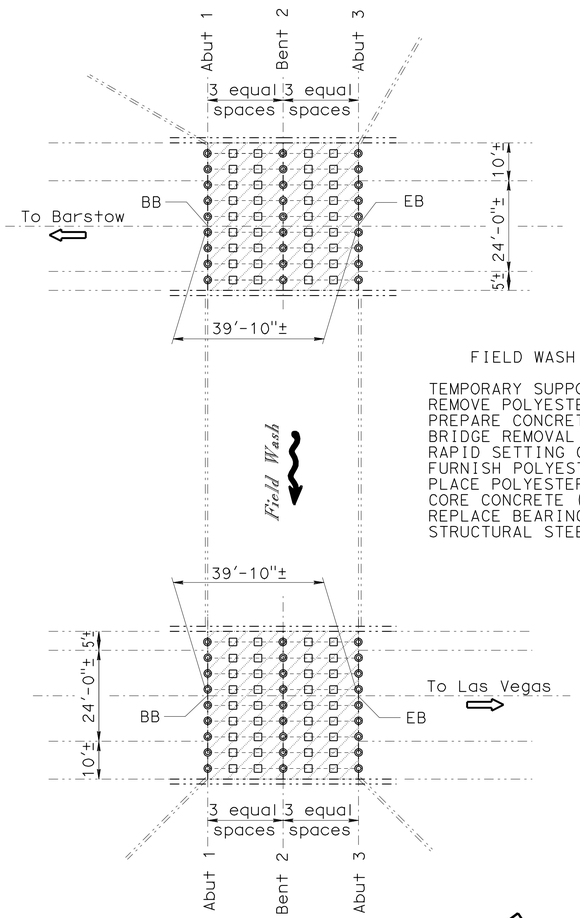

FIELD WASH

BR. NO. 54-0223 L/R

QUANTITIES

TEMPORARY SUPPORT	LUMP	SUM
REMOVE POLYESTER CONCRETE OVERLAY	3,120	SQFT
PREPARE CONCRETE BRIDGE DECK SURFACE	3,120	SQFT
BRIDGE REMOVAL (PORTION), LOCATION A	LUMP	SUM
RAPID SETTING CONCRETE (PATCH)	6	CF
FURNISH POLYESTER CONCRETE OVERLAY	248	CF
PLACE POLYESTER CONCRETE OVERLAY	3,120	SQFT
CORE CONCRETE (1 1/2")	644	LF
REPLACE BEARING PAD	152	EA
STRUCTURAL STEEL (BRIDGE)	12,240	LB

FIELD WASH

Br No. 54-0223L/R, Rte 15, PM R104.77
1" = 20'

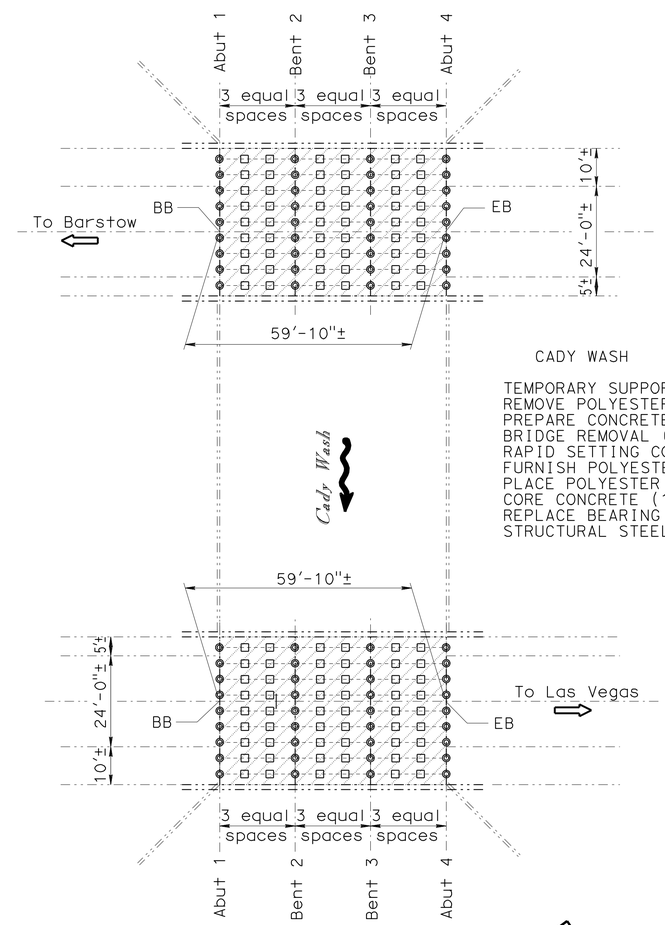

CADY WASH

BR. NO. 54-0225 L/R

QUANTITIES

TEMPORARY SUPPORT	LUMP	SUM
REMOVE POLYESTER CONCRETE OVERLAY	4,680	SQFT
PREPARE CONCRETE BRIDGE DECK SURFACE	4,680	SQFT
BRIDGE REMOVAL (PORTION), LOCATION B	LUMP	SUM
RAPID SETTING CONCRETE (PATCH)	8	CF
FURNISH POLYESTER CONCRETE OVERLAY	364	CF
PLACE POLYESTER CONCRETE OVERLAY	4,680	SQFT
CORE CONCRETE (1 1/2")	966	LF
REPLACE BEARING PAD	228	EA
STRUCTURAL STEEL (BRIDGE)	18,360	LB

CADY WASH

Br No. 54-0225L/R, Rte 15, PM R105.97
1" = 20'

NOTE:
THE CONTRACTOR SHALL VERIFY ALL CONTROLLING FIELD DIMENSIONS BEFORE ORDERING OR FABRICATING ANY MATERIAL.

TONY D. BRAKE
DESIGN ENGINEER

	BY	CHECKED
DESIGN	Edward Li	Gerald Joo
DETAILS	Tom Dang	Edward Li
QUANTITIES	Edward Li	Gerald Joo

LOAD FACTOR DESIGN — LIVE LOADING: HS20-44 AND ALTERNATIVE AND PERMIT DESIGN LOAD
LAYOUT — BY Tom Dang — CHECKED Edward Li
SPECIFICATIONS — BY Erwin Rufino — PLANS AND SPECS COMPARED Erwin Rufino

STATE OF CALIFORNIA
DEPARTMENT OF TRANSPORTATION

DIVISION OF MAINTENANCE
STRUCTURE MAINTENANCE DESIGN

CU 08
EA OM2401

BRIDGE NO. Various
POST MILE Varies

ROUTE 15 BRIDGES
GENERAL PLAN NO. 1

STRUCTURES MAINTENANCE GENERAL PLAN SHEET (ENGLISH) (REV. 10/25/05)

ORIGINAL SCALE IN INCHES FOR REDUCED PLANS 0 1 2 3

DISREGARD PRINTS BEARING EARLIER REVISION DATES

REVISION DATES: 3-01-09 9-18-09 10-22-09 8-17-10

SHEET 01 OF 08

FILE => 08-Om2401-a-gp01.dgn

USERNAME => trlenard DATE PLOTTED => 09-NOV-2010 TIME PLOTTED => 11:24

DIST	COUNTY	ROUTE	POST MILES TOTAL PROJECT	SHEET No	TOTAL SHEETS
08	SBd	15	R104.7/154.7	11	17

Edward Li 08/17/10
REGISTERED CIVIL ENGINEER DATE

11-8-10
PLANS APPROVAL DATE

REGISTERED PROFESSIONAL ENGINEER EDWARD GUOJUN LI No. C56706 Exp. 06/30/11 CIVIL STATE OF CALIFORNIA

The State of California or its officers or agents shall not be responsible for the accuracy or completeness of electronic copies of this plan sheet.

LEGEND:

Indicates existing.

Indicates direction of traffic.

Indicates limits of remove existing 1" polyester overlay and replace with new ¾" polyester overlay.

Indicates longitudinal joints between deck units and new transverse connectors. Install two (2) per joint per span, see "MISCELLANEOUS DETAILS NO. 1" sheet.

Indicates location for removing and replacing existing bearing material with new elastomeric bearing pads, see "MISCELLANEOUS DETAILS NO. 2" sheet.

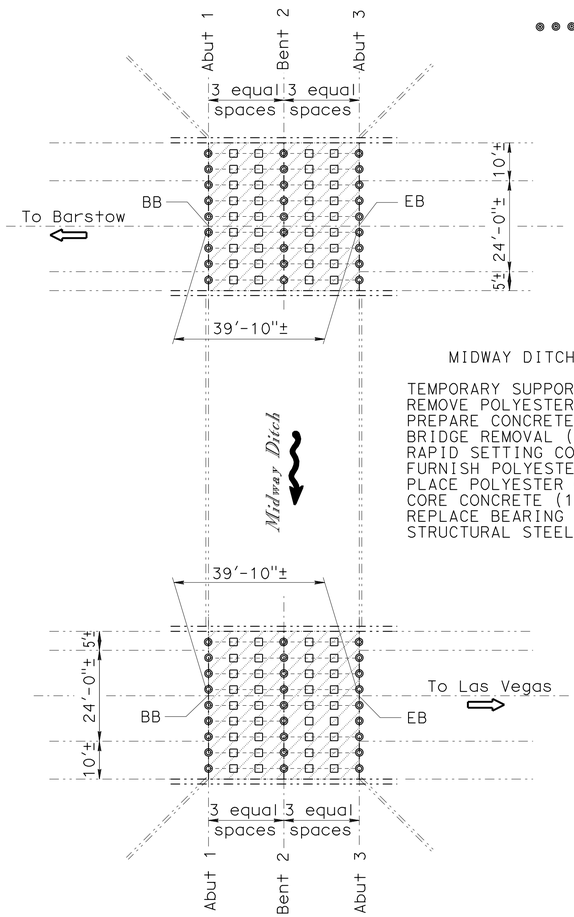

MIDWAY DITCH — BR. NO. 54-0227 L/R

QUANTITIES		
TEMPORARY SUPPORT	LUMP	SUM
REMOVE POLYESTER CONCRETE OVERLAY	3,120	SQFT
PREPARE CONCRETE BRIDGE DECK SURFACE	3,120	SQFT
BRIDGE REMOVAL (PORTION), LOCATION C	LUMP	SUM
RAPID SETTING CONCRETE (PATCH)	6	CF
FURNISH POLYESTER CONCRETE OVERLAY	248	CF
PLACE POLYESTER CONCRETE OVERLAY	3,120	SQFT
CORE CONCRETE (1 1/2")	644	LF
REPLACE BEARING PAD	152	EA
STRUCTURAL STEEL (BRIDGE)	12,240	LB

MIDWAY DITCH

Br No. 54-0227L/R, Rte 15, PM R107.12
1" = 20'

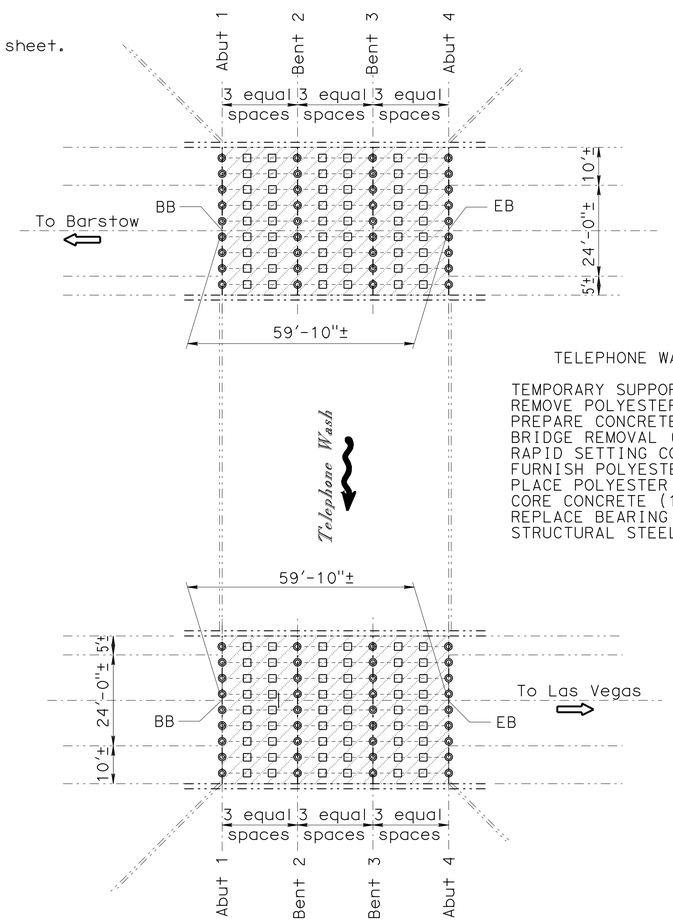

TELEPHONE WASH — BR. NO. 54-0233 L/R

QUANTITIES		
TEMPORARY SUPPORT	LUMP	SUM
REMOVE POLYESTER CONCRETE OVERLAY	4,680	SQFT
PREPARE CONCRETE BRIDGE DECK SURFACE	4,680	SQFT
BRIDGE REMOVAL (PORTION), LOCATION D	LUMP	SUM
RAPID SETTING CONCRETE (PATCH)	8	CF
FURNISH POLYESTER CONCRETE OVERLAY	364	CF
PLACE POLYESTER CONCRETE OVERLAY	4,680	SQFT
CORE CONCRETE (1 1/2")	966	LF
REPLACE BEARING PAD	228	EA
STRUCTURAL STEEL (BRIDGE)	18,360	LB

TELEPHONE WASH

Br No. 54-0233L/R, Rte 15, PM R110.36
1" = 20'

NOTE:
THE CONTRACTOR SHALL VERIFY ALL CONTROLLING FIELD DIMENSIONS BEFORE ORDERING OR FABRICATING ANY MATERIAL.

TONY D. BRAKE
DESIGN ENGINEER

	BY	CHECKED
DESIGN	Edward Li	Gerald Joo
DETAILS	Tom Dang	Edward Li
QUANTITIES	Edward Li	Gerald Joo

LOAD FACTOR DESIGN — LIVE LOADING: HS20-44 AND ALTERNATIVE AND PERMIT DESIGN LOAD

	BY	CHECKED
LAYOUT	Tom Dang	Edward Li
SPECIFICATIONS	Erwin Rufino	PLANS AND SPECS COMPARED Erwin Rufino

STATE OF CALIFORNIA
DEPARTMENT OF TRANSPORTATION

DIVISION OF MAINTENANCE
STRUCTURE MAINTENANCE DESIGN

BRIDGE NO. Various
POST MILE Varies

ROUTE 15 BRIDGES
GENERAL PLAN NO. 2

STRUCTURES MAINTENANCE GENERAL PLAN SHEET (ENGLISH) (REV. 10/25/05)

ORIGINAL SCALE IN INCHES FOR REDUCED PLANS 0 1 2 3

CU 08
EA 0M2401

DISREGARD PRINTS BEARING EARLIER REVISION DATES

REVISION DATES: 7-01-09 9-18-09 10-22-09 8-17-10

SHEET 02 OF 08

FILE => 08-0m2401-a-gp02.dgn

USERNAME => tlenard DATE PLOTTED => 09-NOV-2010 TIME PLOTTED => 11:24

DIST	COUNTY	ROUTE	POST MILES TOTAL PROJECT	SHEET No	TOTAL SHEETS
08	SBd	15	R104.7/154.7	12	17

Edward Li 08/17/10
REGISTERED CIVIL ENGINEER DATE

11-8-10
PLANS APPROVAL DATE

REGISTERED PROFESSIONAL ENGINEER EDWARD GUOJUN LI No. C56706 Exp. 06/30/11 CIVIL STATE OF CALIFORNIA

The State of California or its officers or agents shall not be responsible for the accuracy or completeness of electronic copies of this plan sheet.

LEGEND:

Indicates existing.

Indicates direction of traffic.

Indicates limits of remove existing 1" polyester overlay and replace with new ¾" polyester overlay.

Indicates longitudinal joints between deck units and new transverse connectors. Install two (2) per joint per span, see "MISCELLANEOUS DETAILS NO. 1" sheet.

Indicates location for removing and replacing existing bearing material with new elastomeric bearing pads, see "MISCELLANEOUS DETAILS NO. 2" sheet.

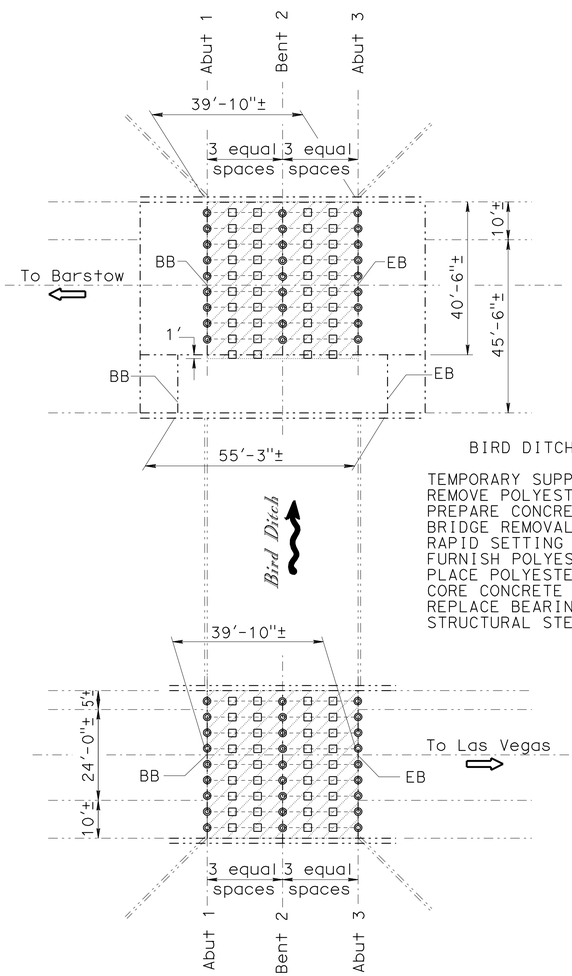

BIRD DITCH QUANTITIES BR. NO. 54-0238 L/R

TEMPORARY SUPPORT	LUMP	SUM
REMOVE POLYESTER CONCRETE OVERLAY	3,360	SQFT
PREPARE CONCRETE BRIDGE DECK SURFACE	3,360	SQFT
BRIDGE REMOVAL (PORTION), LOCATION E	LUMP	SUM
RAPID SETTING CONCRETE (PATCH)	6	CF
FURNISH POLYESTER CONCRETE OVERLAY	260	CF
PLACE POLYESTER CONCRETE OVERLAY	3,360	SQFT
CORE CONCRETE (1 1/2")	668	LF
REPLACE BEARING PAD	152	EA
STRUCTURAL STEEL (BRIDGE)	13,600	LB

BIRD DITCH

Br No. 54-0238L/R, Rte 15, PM R115.36
1" = 20'

NOTE:
THE CONTRACTOR SHALL VERIFY ALL CONTROLLING FIELD DIMENSIONS BEFORE ORDERING OR FABRICATING ANY MATERIAL.

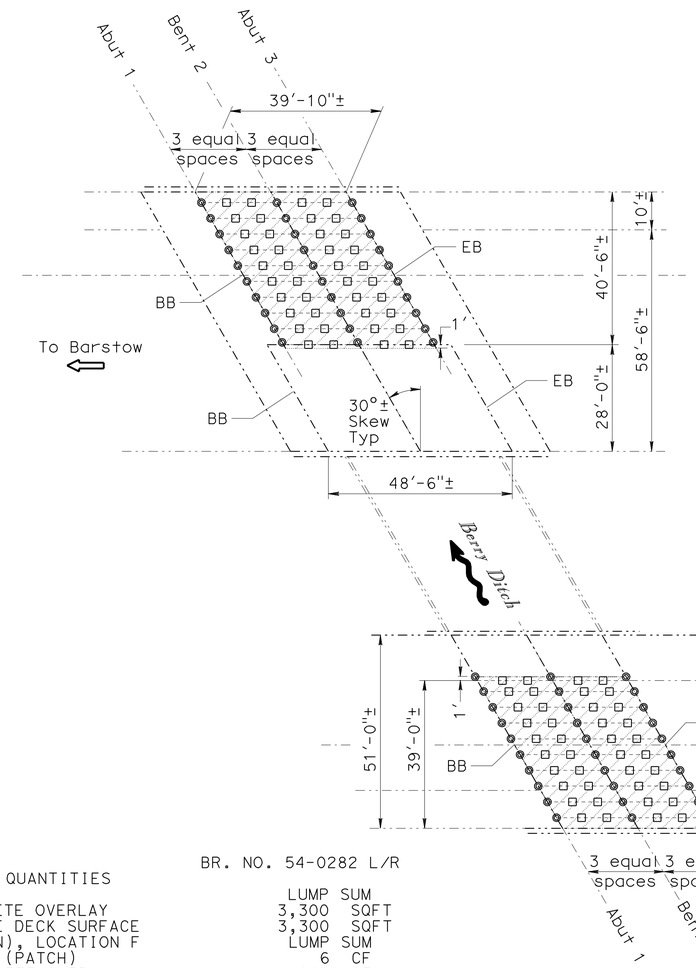

BERRY DITCH QUANTITIES BR. NO. 54-0282 L/R

TEMPORARY SUPPORT	LUMP	SUM
REMOVE POLYESTER CONCRETE OVERLAY	3,300	SQFT
PREPARE CONCRETE BRIDGE DECK SURFACE	3,300	SQFT
BRIDGE REMOVAL (PORTION), LOCATION F	LUMP	SUM
RAPID SETTING CONCRETE (PATCH)	6	CF
FURNISH POLYESTER CONCRETE OVERLAY	268	CF
PLACE POLYESTER CONCRETE OVERLAY	3,300	SQFT
CORE CONCRETE (1 1/2")	668	LF
REPLACE BEARING PAD	152	EA
STRUCTURAL STEEL (BRIDGE)	13,600	LB

BERRY DITCH

Br No. 54-0282L/R, Rte 15, PM R139.2
1" = 20'

TONY D. BRAKE
DESIGN ENGINEER

	BY	CHECKED			
DESIGN	Edward Li	Gerald Joo	LOAD FACTOR DESIGN	LIVE LOADING: HS20-44 AND ALTERNATIVE AND PERMIT DESIGN LOAD	
DETAILS	Tom Dang	Edward Li	LAYOUT	Tom Dang	Edward Li
QUANTITIES	Edward Li	Gerald Joo	SPECIFICATIONS	Erwin Rufino	Erwin Rufino

STATE OF CALIFORNIA
DEPARTMENT OF TRANSPORTATION

DIVISION OF MAINTENANCE
STRUCTURE MAINTENANCE DESIGN

BRIDGE NO. Various
POST MILE Varies

ROUTE 15 BRIDGES
GENERAL PLAN NO. 3

STRUCTURES MAINTENANCE GENERAL PLAN SHEET (ENGLISH) (REV. 10/25/05)

ORIGINAL SCALE IN INCHES FOR REDUCED PLANS 0 1 2 3

CU 08
EA OM2401

DISREGARD PRINTS BEARING EARLIER REVISION DATES
REVISION DATES: 3-04-09, 9-18-09, 10-22-09, 8-17-10

SHEET 03 OF 08

FILE => 08-Om2401-a-gp03.dgn

USERNAME => trlenard DATE PLOTTED => 09-NOV-2010 TIME PLOTTED => 11:24

DIST	COUNTY	ROUTE	POST MILES TOTAL PROJECT	SHEET No	TOTAL SHEETS
08	SBd	15	R104.7/154.7	13	17

Edward Li 08/17/10
REGISTERED CIVIL ENGINEER DATE

11-8-10
PLANS APPROVAL DATE

REGISTERED PROFESSIONAL ENGINEER EDWARD GUOJUN LI No. C56706 Exp. 06/30/11 CIVIL STATE OF CALIFORNIA

The State of California or its officers or agents shall not be responsible for the accuracy or completeness of electronic copies of this plan sheet.

LEGEND:

Indicates existing.

Indicates direction of traffic.

Indicates limits of remove existing 1" polyester overlay and replace with new ¾" polyester overlay.

Indicates longitudinal joints between deck units and new transverse connectors. Install two (2) per joint per span, see "MISCELLANEOUS DETAILS NO. 1" sheet.

Indicates location for removing and replacing existing bearing material with new elastomeric bearing pads, see "MISCELLANEOUS DETAILS NO. 2" sheet.

HACK WASH BR. NO. 54-0283 L

QUANTITIES

TEMPORARY SUPPORT	LUMP	SUM
REMOVE POLYESTER CONCRETE OVERLAY	2,840	SQFT
PREPARE CONCRETE BRIDGE DECK SURFACE	2,840	SQFT
BRIDGE REMOVAL (PORTION), LOCATION G	LUMP	SUM
RAPID SETTING CONCRETE (PATCH)	4	CF
FURNISH POLYESTER CONCRETE OVERLAY	220	CF
PLACE POLYESTER CONCRETE OVERLAY	2,840	SQFT
CORE CONCRETE (1 1/2")	501	LF
REPLACE BEARING PAD	114	EA
STRUCTURAL STEEL (BRIDGE)	10,200	LB

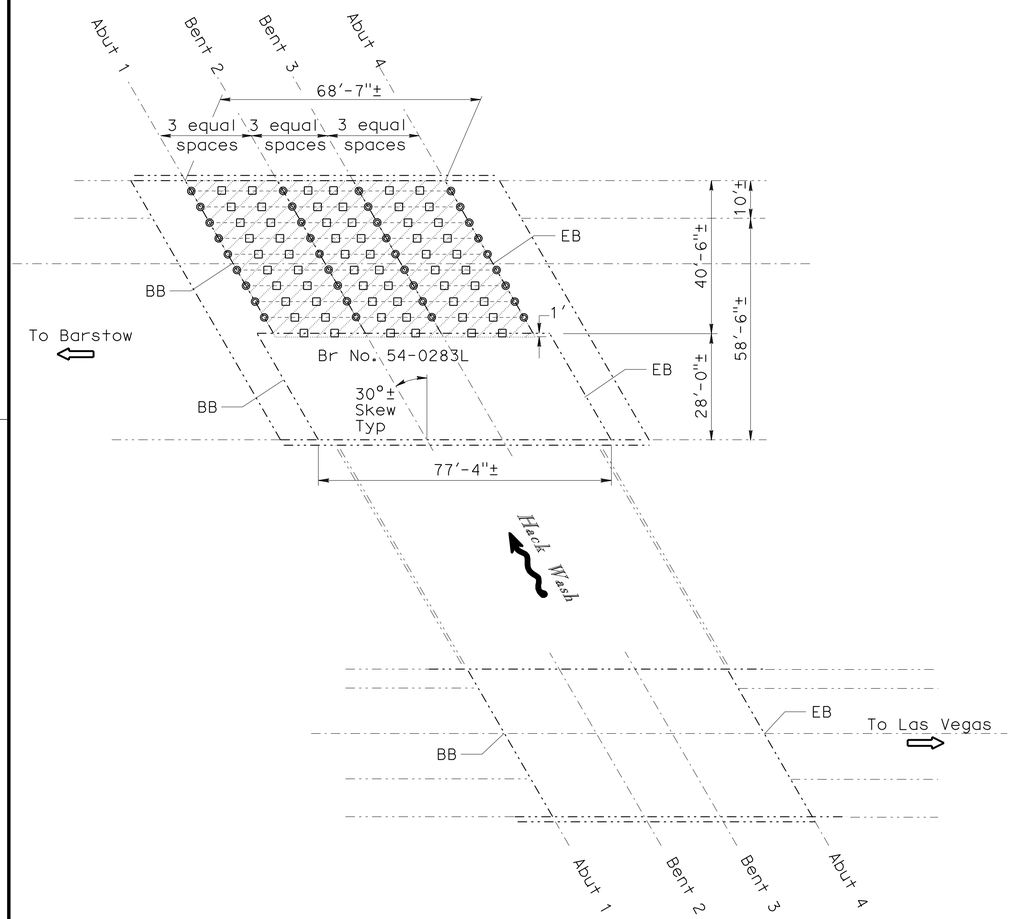

HACK WASH

Br No. 54-0283L, Rte 15, PM R142.26
1" = 20'

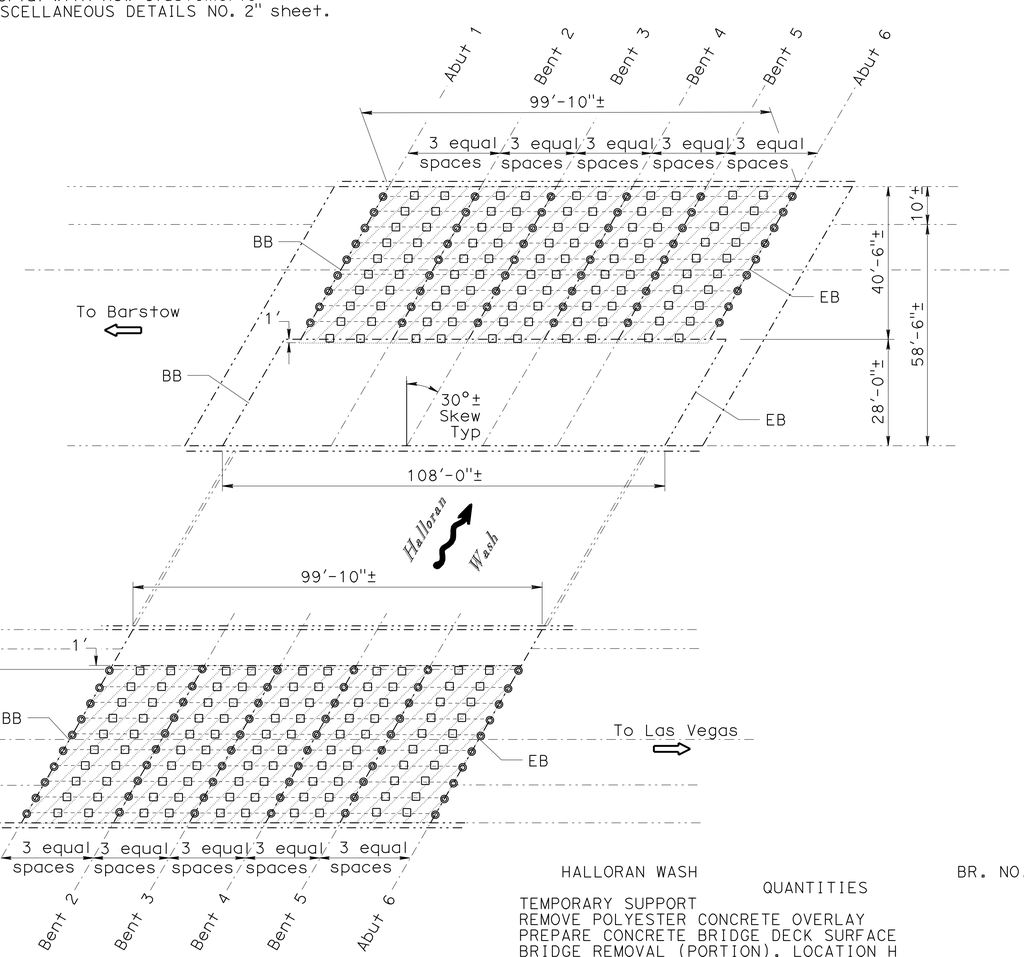

HALLORAN WASH

Br No. 54-0287L/R, Rte 15, PM R147.65
1" = 20'

HALLORAN WASH BR. NO. 54-0287 L/R

QUANTITIES

TEMPORARY SUPPORT	LUMP	SUM
REMOVE POLYESTER CONCRETE OVERLAY	8,250	SQFT
PREPARE CONCRETE BRIDGE DECK SURFACE	8,250	SQFT
BRIDGE REMOVAL (PORTION), LOCATION H	LUMP	SUM
RAPID SETTING CONCRETE (PATCH)	14	CF
FURNISH POLYESTER CONCRETE OVERLAY	640	CF
PLACE POLYESTER CONCRETE OVERLAY	8,250	SQFT
CORE CONCRETE (1 1/2")	1,668	LF
REPLACE BEARING PAD	380	EA
STRUCTURAL STEEL (BRIDGE)	34,000	LB

NOTE:
THE CONTRACTOR SHALL VERIFY ALL CONTROLLING FIELD DIMENSIONS BEFORE ORDERING OR FABRICATING ANY MATERIAL.

TONY D. BRAKE
DESIGN ENGINEER

	BY	CHECKED
DESIGN	Edward Li	Gerald Joo
DETAILS	Tom Dang	Edward Li
QUANTITIES	Edward Li	Gerald Joo

LOAD FACTOR DESIGN — LIVE LOADING: HS20-44 AND ALTERNATIVE AND PERMIT DESIGN LOAD

	BY	CHECKED
LAYOUT	Tom Dang	Edward Li
SPECIFICATIONS	Erwin Rufino	PLANS AND SPECS COMPARED Erwin Rufino

STATE OF CALIFORNIA
DEPARTMENT OF TRANSPORTATION

DIVISION OF MAINTENANCE
STRUCTURE MAINTENANCE DESIGN

BRIDGE NO. Various
POST MILE Varies

ROUTE 15 BRIDGES
GENERAL PLAN NO. 4

STRUCTURES MAINTENANCE GENERAL PLAN SHEET (ENGLISH) (REV. 10/25/05)

ORIGINAL SCALE IN INCHES FOR REDUCED PLANS 0 1 2 3

CU 08
EA 0M2401

DISREGARD PRINTS BEARING EARLIER REVISION DATES

REVISION DATES: 7-01-09 9-18-09 10-22-09 8-17-10

SHEET 04 OF 08

FILE => 08-0m2401-a-gp04.dgn

USERNAME => rfrenard DATE PLOTTED => 09-NOV-2010 TIME PLOTTED => 11:25

DIST	COUNTY	ROUTE	POST MILES TOTAL PROJECT	SHEET No	TOTAL SHEETS
08	SBd	15	R104.7/154.7	14	17

Edward Li 08/17/10
REGISTERED CIVIL ENGINEER DATE

11-8-10
PLANS APPROVAL DATE

REGISTERED PROFESSIONAL ENGINEER EDWARD GUOJUN LI No. C56706 Exp. 06/30/11 CIVIL STATE OF CALIFORNIA

The State of California or its officers or agents shall not be responsible for the accuracy or completeness of electronic copies of this plan sheet.

LEGEND:

- Indicates existing.
- Indicates direction of traffic.
- Indicates limits of remove existing 1" polyester overlay and replace with new ¾" polyester overlay.
- Indicates longitudinal joints between deck units and new transverse connectors. Install two (2) per joint per span, see "MISCELLANEOUS DETAILS NO. 1" sheet.
- Indicates location for removing and replacing existing bearing material with new elastomeric bearing pads, see "MISCELLANEOUS DETAILS NO. 2" sheet.

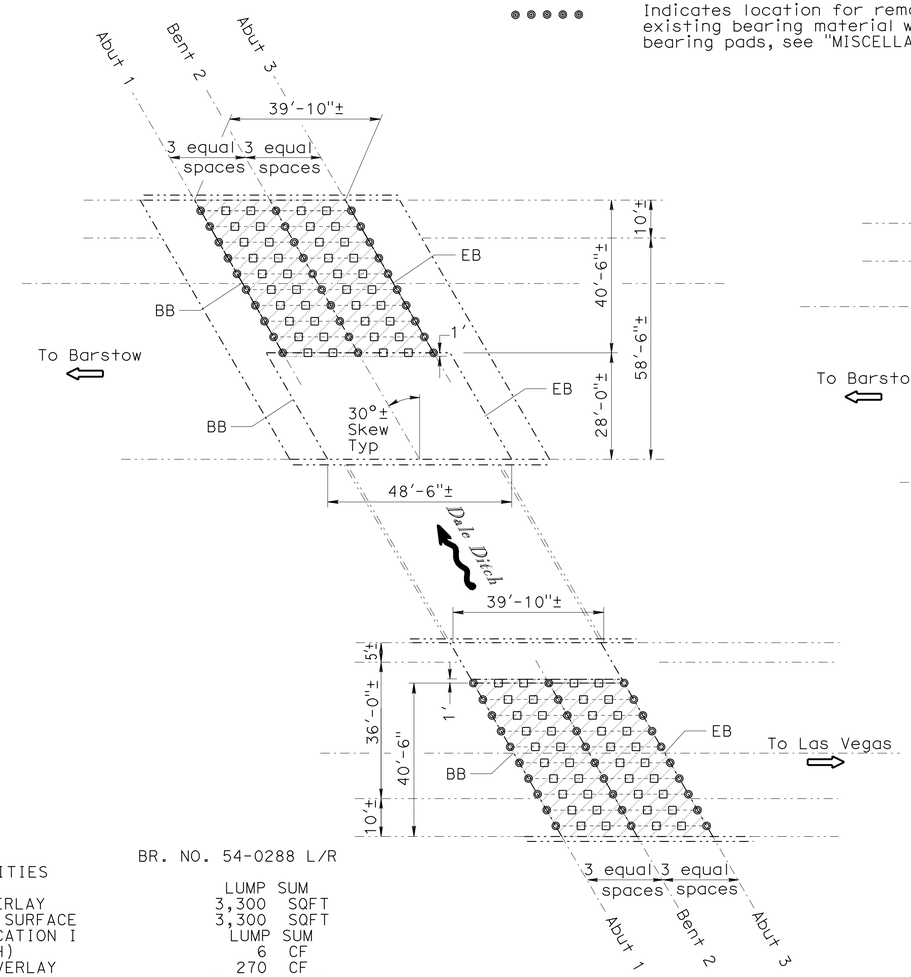

DALE DITCH

Br No. 54-0288L/R, Rte 15, PM R150.3
1" = 20'

DALE DITCH	BR. NO. 54-0288 L/R
QUANTITIES	
TEMPORARY SUPPORT	LUMP SUM
REMOVE POLYESTER CONCRETE OVERLAY	3,300 SQFT
PREPARE CONCRETE BRIDGE DECK SURFACE	3,300 SQFT
BRIDGE REMOVAL (PORTION), LOCATION I	LUMP SUM
RAPID SETTING CONCRETE (PATCH)	6 CF
FURNISH POLYESTER CONCRETE OVERLAY	270 CF
PLACE POLYESTER CONCRETE OVERLAY	3,300 SQFT
CORE CONCRETE (1 1/2")	668 LF
REPLACE BEARING PAD	152 EA
STRUCTURAL STEEL (BRIDGE)	13,600 LB

NOTE:
THE CONTRACTOR SHALL VERIFY ALL CONTROLLING FIELD DIMENSIONS BEFORE ORDERING OR FABRICATING ANY MATERIAL.

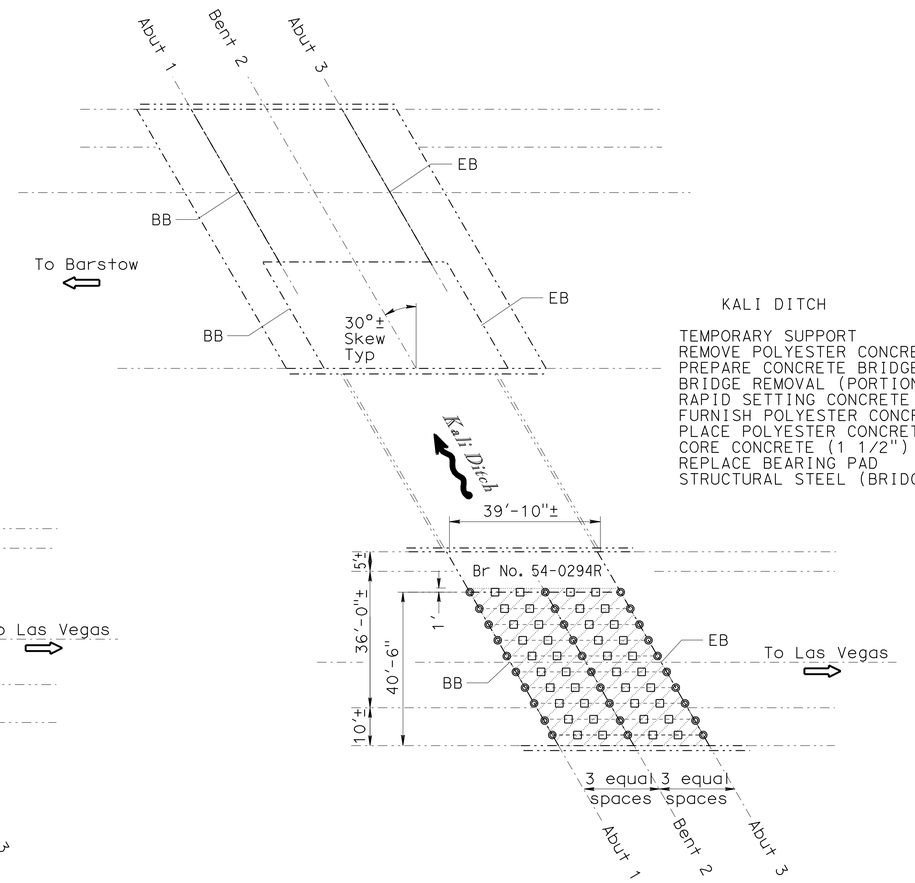

KALI DITCH

Br No. 54-0294R, Rte 15, PM R154.68
1" = 20'

KALI DITCH	BR. NO. 54-0294 R
QUANTITIES	
TEMPORARY SUPPORT	LUMP SUM
REMOVE POLYESTER CONCRETE OVERLAY	1,650 SQFT
PREPARE CONCRETE BRIDGE DECK SURFACE	1,650 SQFT
BRIDGE REMOVAL (PORTION), LOCATION J	LUMP SUM
RAPID SETTING CONCRETE (PATCH)	3 CF
FURNISH POLYESTER CONCRETE OVERLAY	135 CF
PLACE POLYESTER CONCRETE OVERLAY	1,650 SQFT
CORE CONCRETE (1 1/2")	334 LF
REPLACE BEARING PAD	76 EA
STRUCTURAL STEEL (BRIDGE)	6,800 LB

TONY D. BRAKE
DESIGN ENGINEER

	BY	CHECKED
DESIGN	Edward Li	Gerald Joo
DETAILS	Tom Dang	Edward Li
QUANTITIES	Edward Li	Gerald Joo

LOAD FACTOR DESIGN — LIVE LOADING: HS20-44 AND ALTERNATIVE AND PERMIT DESIGN LOAD
LAYOUT — BY Tom Dang — CHECKED Edward Li
SPECIFICATIONS — BY Erwin Rufino — PLANS AND SPECS COMPARED Erwin Rufino

STATE OF CALIFORNIA
DEPARTMENT OF TRANSPORTATION

DIVISION OF MAINTENANCE
STRUCTURE MAINTENANCE DESIGN

BRIDGE NO. Various
POST MILE Varies

ROUTE 15 BRIDGES
GENERAL PLAN NO. 5

STRUCTURES MAINTENANCE GENERAL PLAN SHEET (ENGLISH) (REV. 10/25/05)

ORIGINAL SCALE IN INCHES FOR REDUCED PLANS 0 1 2 3

CU 08
EA 0M2401

DISREGARD PRINTS BEARING EARLIER REVISION DATES
REVISION DATES 3-01-09 9-10-09 10-27-09 8-17-10

SHEET 05 OF 08

FILE => 08-0m2401-a-gp05.dgn

USERNAME => trlenard DATE PLOTTED => 09-NOV-2010 TIME PLOTTED => 11:25

DIST	COUNTY	ROUTE	POST MILES TOTAL PROJECT	SHEET No	TOTAL SHEETS
08	SBd	15	R104.7/154.7	15	17

Edward Li 08/17/10
REGISTERED CIVIL ENGINEER DATE

11-8-10
PLANS APPROVAL DATE

REGISTERED PROFESSIONAL ENGINEER EDWARD GUOJUN LI No. C56706 Exp. 06/30/11 CIVIL STATE OF CALIFORNIA

The State of California or its officers or agents shall not be responsible for the accuracy or completeness of electronic copies of this plan sheet.

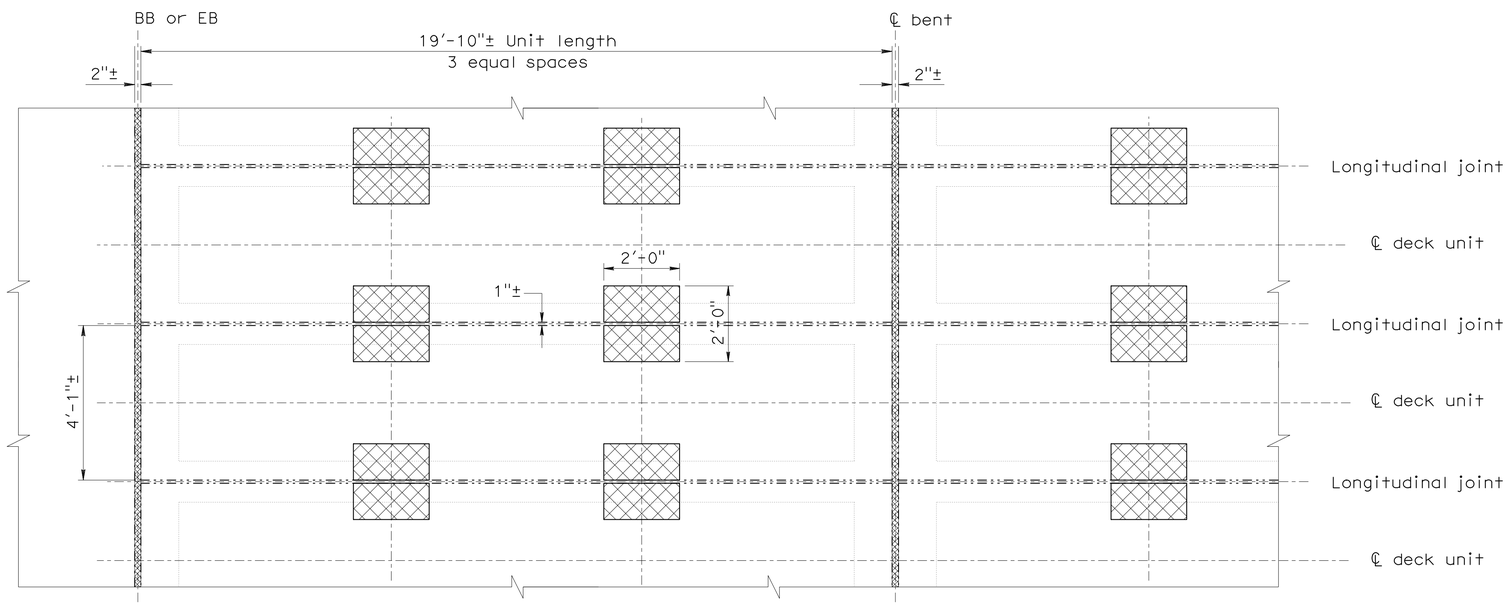

PLAN - PART

NO SCALE

LEGEND:

Indicates limits of existing precast deck unit removal, see "MISCELLANEOUS DETAILS NO. 1" sheet.

Indicates limits of existing grout removal.

NOTE:
THE CONTRACTOR SHALL VERIFY ALL CONTROLLING FIELD DIMENSIONS BEFORE ORDERING OR FABRICATING ANY MATERIAL.

	BY	CHECKED
DESIGN	Edward Li	Gerald Joo
DETAILS	Tom Dang	Edward Li
QUANTITIES	Edward Li	Gerald Joo

STATE OF CALIFORNIA
DEPARTMENT OF TRANSPORTATION

DIVISION OF MAINTENANCE
STRUCTURE MAINTENANCE DESIGN

BRIDGE NO. Various
POST MILE Varies

ROUTE 15 BRIDGES
BRIDGE REMOVAL (PORTION)

STRUCTURES MAINTENANCE DETAIL SHEET (ENGLISH) (REV. 10/25/05)

ORIGINAL SCALE IN INCHES FOR REDUCED PLANS 0 1 2 3

CU 08
EA 0M2401

DISREGARD PRINTS BEARING EARLIER REVISION DATES

REVISION DATES: 7-01-09, 9-18-09, 10-22-09, 10-27-09, 11-03-09, 8-17-10

SHEET 06 OF 08

FILE => 08-0m2401-b-removal.dgn

USERNAME => tlenard DATE PLOTTED => 09-NOV-2010 TIME PLOTTED => 11:25

DIST	COUNTY	ROUTE	POST MILES TOTAL PROJECT	SHEET No	TOTAL SHEETS
08	SBd	15	R104.7/154.7	16	17

Edward Li 10/21/10
REGISTERED CIVIL ENGINEER DATE

11-8-10
PLANS APPROVAL DATE

REGISTERED PROFESSIONAL ENGINEER EDWARD GUOJUN LI No. C56706 Exp. 06/30/11 CIVIL STATE OF CALIFORNIA

The State of California or its officers or agents shall not be responsible for the accuracy or completeness of electronic copies of this plan sheet.

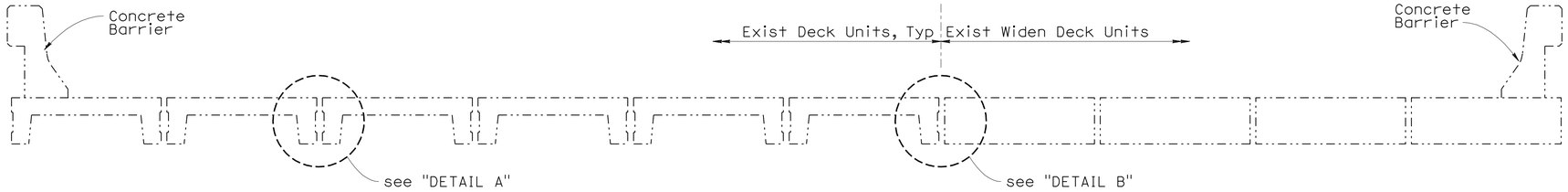

TYPICAL SECTION

NO SCALE

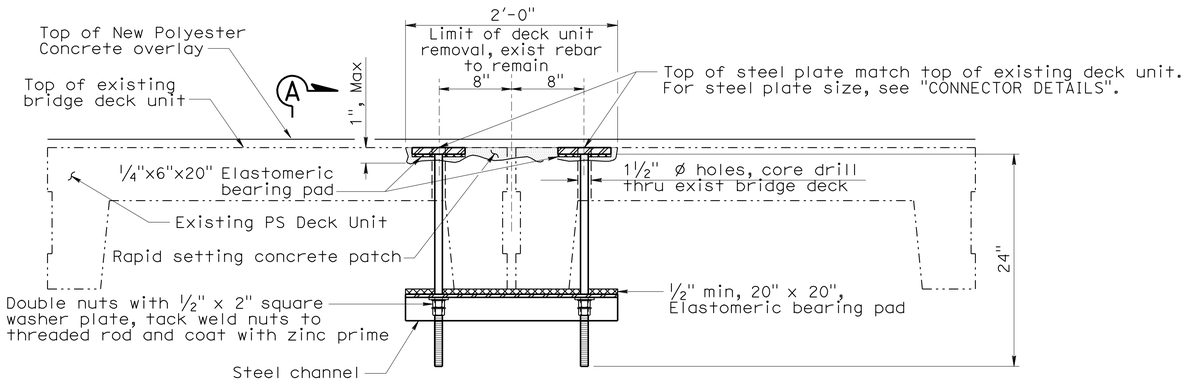

DETAIL A

NO SCALE

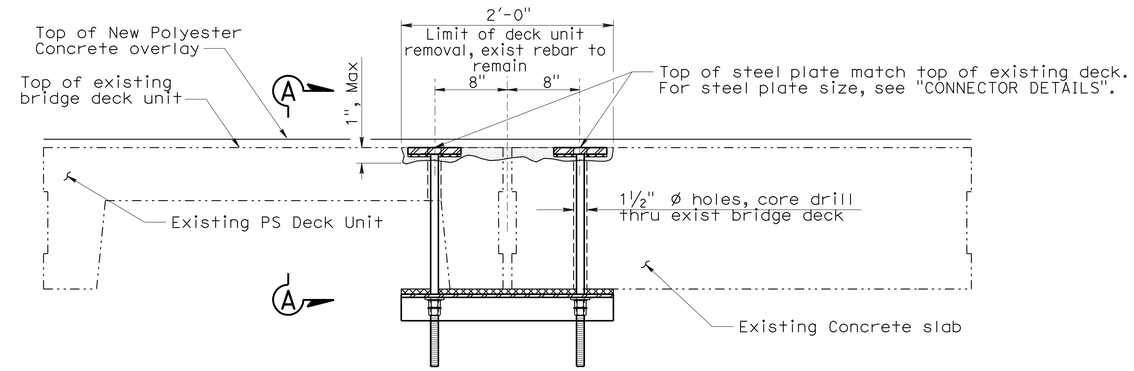

DETAIL B

NO SCALE

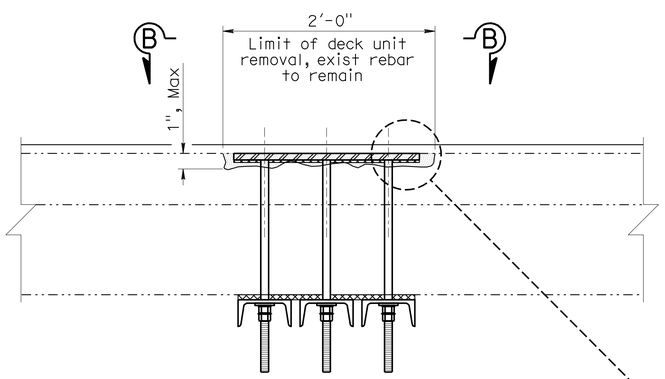

SECTION A-A

NO SCALE

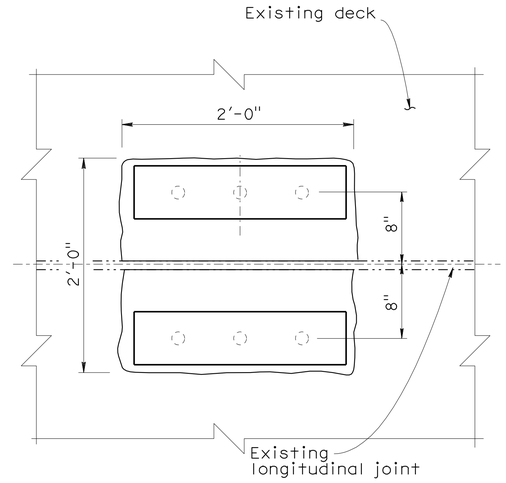

VIEW B-B

NO SCALE

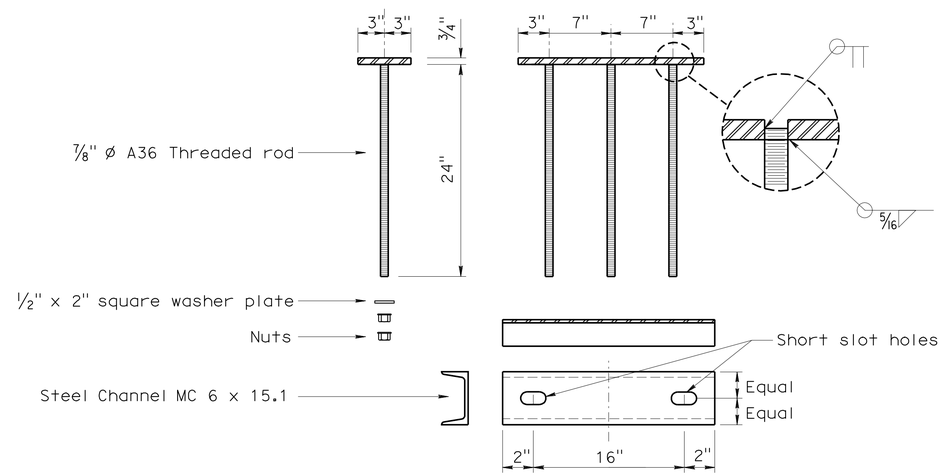

CONNECTOR DETAILS

NO SCALE

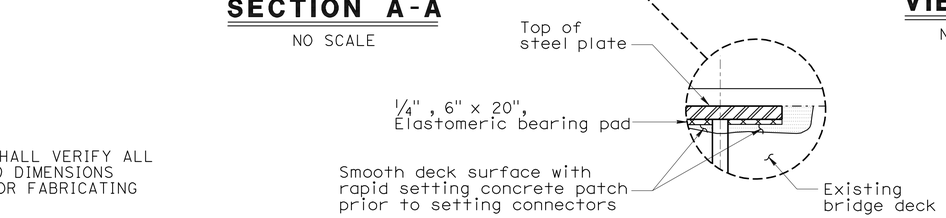

NOTE:
THE CONTRACTOR SHALL VERIFY ALL CONTROLLING FIELD DIMENSIONS BEFORE ORDERING OR FABRICATING ANY MATERIAL.

NOTES:
ALL PLATES, CHANNELS, RODS AND FASTENERS SHALL BE STRUCTURAL STEEL, CONFORMING TO THE REQUIREMENTS OF ASTM DESIGNATION A36 AND BE GALVANIZED.

	BY	CHECKED
DESIGN	Edward Li	Gerald Joo
DETAILS	Tom Dang	Edward Li
QUANTITIES	Edward Li	Gerald Joo

STATE OF CALIFORNIA
DEPARTMENT OF TRANSPORTATION

DIVISION OF MAINTENANCE
STRUCTURE MAINTENANCE DESIGN

BRIDGE NO. Various
POST MILE Varies

ROUTE 15 BRIDGES
MISCELLANEOUS DETAILS NO. 1

STRUCTURES MAINTENANCE DETAIL SHEET (ENGLISH) (REV. 10/25/05)

ORIGINAL SCALE IN INCHES FOR REDUCED PLANS 0 1 2 3

CU 08
EA 0M2401

DISREGARD PRINTS BEARING EARLIER REVISION DATES

REVISION DATES: 3-01-09 9-18-09 11-04-09 8-17-10 10-21-10

SHEET 07 OF 08

FILE => 08-0m2401-c-miscdts01.dgn

USERNAME => trlenard DATE PLOTTED => 09-NOV-2010 TIME PLOTTED => 11:25

DIST	COUNTY	ROUTE	POST MILES TOTAL PROJECT	SHEET No	TOTAL SHEETS
08	SBd	15	R104.7/154.7	17	17

Edward Li 08/17/10
REGISTERED CIVIL ENGINEER DATE

11-8-10
PLANS APPROVAL DATE

The State of California or its officers or agents shall not be responsible for the accuracy or completeness of electronic copies of this plan sheet.

REGISTERED PROFESSIONAL ENGINEER EDWARD GUOJUN LI No. C56706 Exp. 06/30/11 CIVIL STATE OF CALIFORNIA

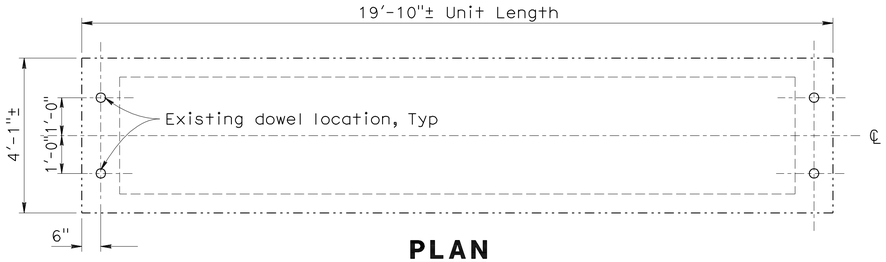

PLAN

Existing deck unit

PLAN

Existing deck unit

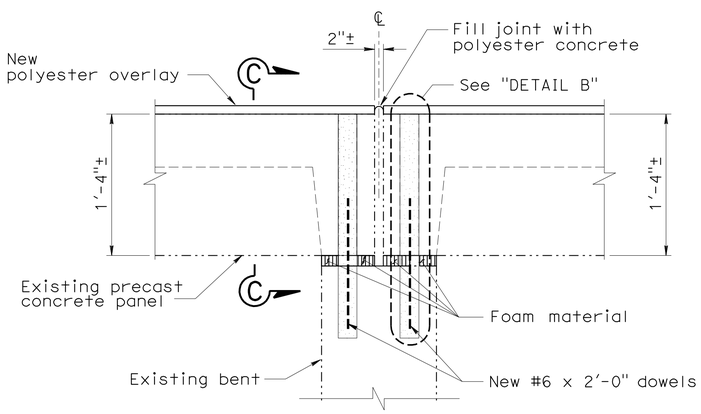

ASSEMBLY AT BENTS

NO SCALE

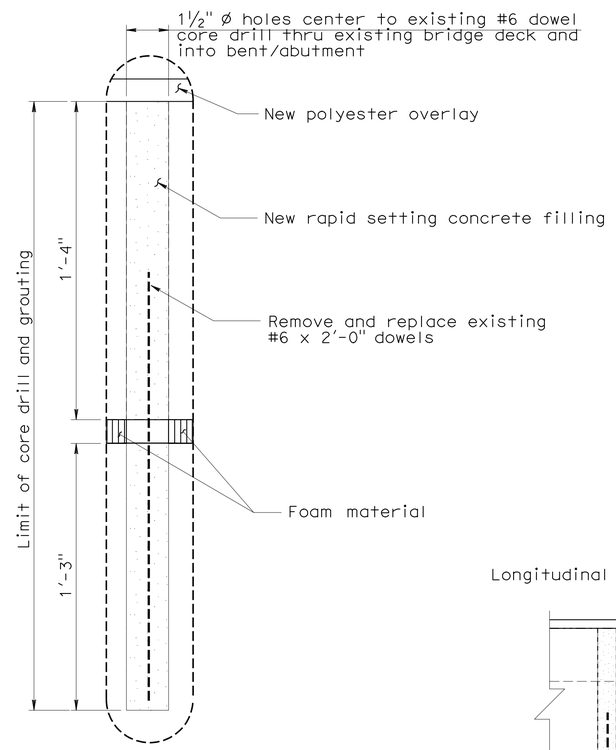

DETAIL B

NO SCALE

TEMPORARY SUPPORT LOAD TABLE	
	Load
Dead Load (per PS deck unit)	10 kips
Dead Load + Live Load	11.6 kips

NOTES:

Construction Sequence

1. Remove existing 1 inch polyester overlay.
2. Locate existing dowel locations on bridge deck.
3. Core drill 1½" Ø holes centered on existing #6 dowels.
4. Remove existing dowels and existing grout around dowels.
5. Jack up existing precast panel without vehicular live load.
6. Remove existing expansion joint filler at bearing surfaces.
7. Remove existing grout along transverse joints at bents and abutments.
8. Place new elastomeric pads.
9. Lower existing precast panels.
10. Insert new dowels and grout dowels with rapid setting concrete.
11. Install transverse connectors.
12. Place new ¾" polyester overlay.

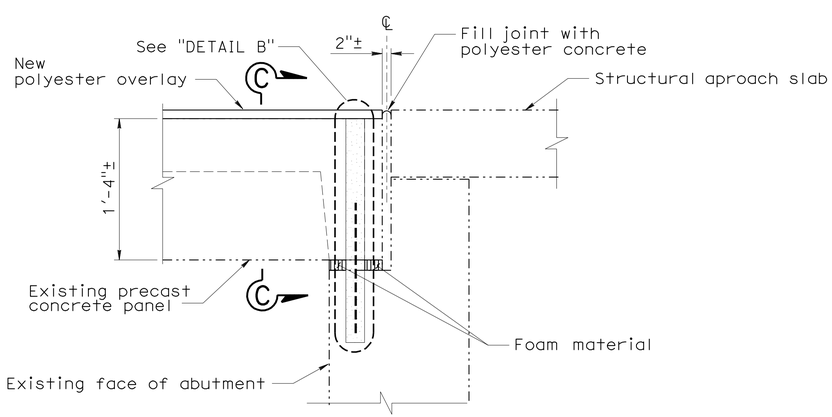

ASSEMBLY AT ABUTMENTS

NO SCALE

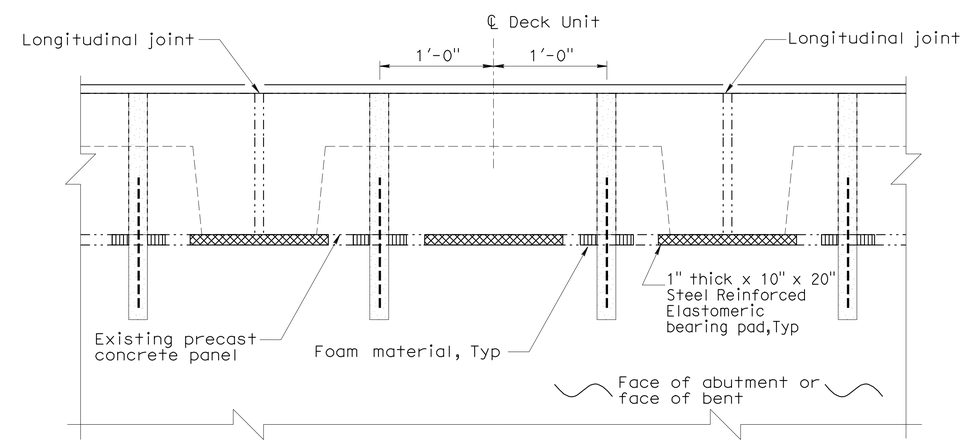

VIEW C-C

NO SCALE

NOTE:
THE CONTRACTOR SHALL VERIFY ALL CONTROLLING FIELD DIMENSIONS BEFORE ORDERING OR FABRICATING ANY MATERIAL.

	BY	CHECKED
DESIGN	Edward Li	Gerald Joo
DETAILS	Tom Dang	Edward Li
QUANTITIES	Edward Li	Gerald Joo

STATE OF CALIFORNIA
DEPARTMENT OF TRANSPORTATION

DIVISION OF MAINTENANCE
STRUCTURE MAINTENANCE DESIGN

BRIDGE NO. Various
POST MILE Varies

ROUTE 15 BRIDGES
MISCELLANEOUS DETAILS NO. 2

STRUCTURES MAINTENANCE DETAIL SHEET (ENGLISH) (REV. 10/25/05)

ORIGINAL SCALE IN INCHES FOR REDUCED PLANS 0 1 2 3

CU 08
EA 0M2401

DISREGARD PRINTS BEARING EARLIER REVISION DATES

REVISION DATES: 3-01-09 9-18-09 10-12-09 10-22-09 10-21-09 7-26-10 8-17-10

SHEET 08 OF 08

FILE => 08-0m2401-c-miscdts02.dgn

USERNAME => friehard DATE PLOTTED => 09-NOV-2010 TIME PLOTTED => 11:25