Dist	COUNTY	ROUTE	POST MILES TOTAL PROJECT	SHEET No.	TOTAL SHEETS
08	Riv	371	67.7/72.9	20	161

REGISTERED CIVIL ENGINEER 10-31-14 DATE

10-13-14
PLANS APPROVAL DATE

REGISTERED PROFESSIONAL ENGINEER THOMAS NGO No. 68383 Exp. 09-30-15 CIVIL STATE OF CALIFORNIA

THE STATE OF CALIFORNIA OR ITS OFFICERS OR AGENTS SHALL NOT BE RESPONSIBLE FOR THE ACCURACY OR COMPLETENESS OF SCANNED COPIES OF THIS PLAN SHEET.

NOTE:

FOR ACCURATE RIGHT OF WAY DATA, CONTACT RIGHT OF WAY ENGINEERING AT THE DISTRICT OFFICE.

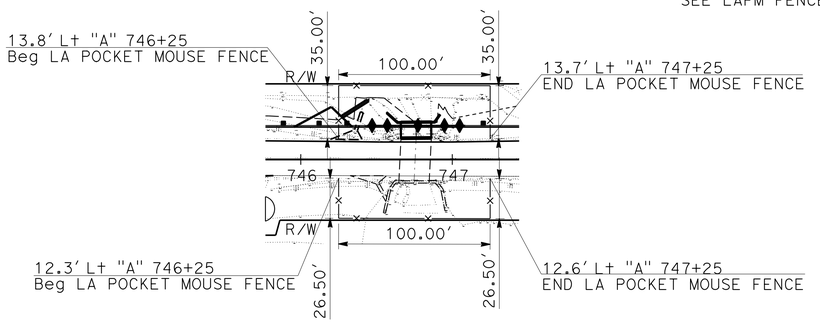

DETAIL "A"

CAHUILLA CREEK LA POCKET MOUSE FENCE

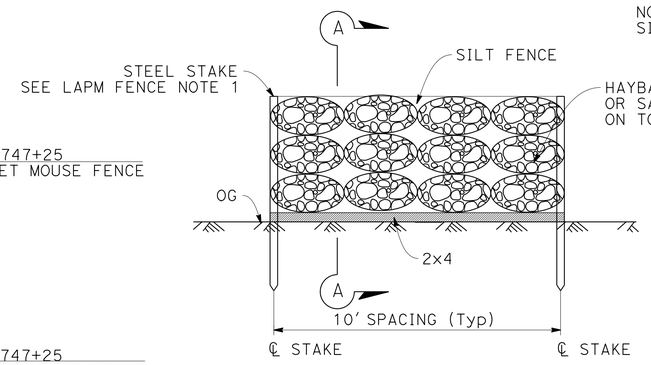

PROFILE VIEW
CAHUILLA CREEK LA POCKET MOUSE FENCE

SCALE: NO SCALE

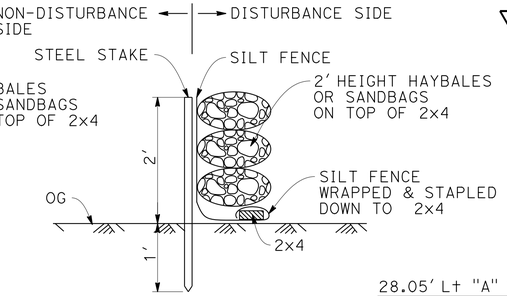

SECTION A-A

SCALE: NO SCALE

CAHUILLA CREEK LA POCKET MOUSE (LAPM) FENCE NOTE:

1. USE METAL POST MARKER AS SHOWN ON STP A73B OR APPROVED EQUIVALENT.
2. LAPM FENCE WILL BE PLACED AS SHOWN ON THE DETAIL "A" OR DIRECTED BY A QUALIFIED LAPM BIOLOGIST

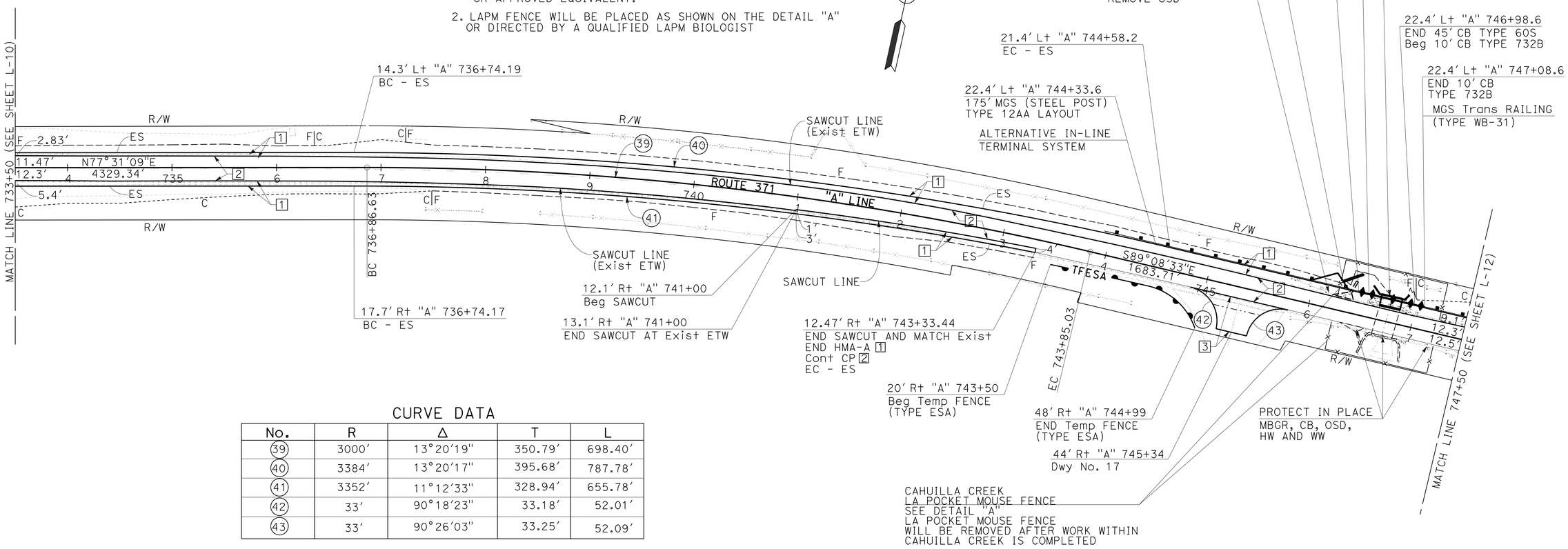

CURVE DATA

No.	R	Δ	T	L
39	3000'	13°20'19"	350.79'	698.40'
40	3384'	13°20'17"	395.68'	787.78'
41	3352'	11°12'33"	328.94'	655.78'
42	33'	90°18'23"	33.18'	52.01'
43	33'	90°26'03"	33.25'	52.09'

1 **REPLACED PER ADDENDUM No. 1 DATED OCTOBER 31, 2014**

LAYOUT

SCALE: 1"= 50' **L-11**

STATE OF CALIFORNIA - DEPARTMENT OF TRANSPORTATION
Caltrans
DESIGN
FUNCTIONAL SUPERVISOR: MARK PERTILE
CALCULATED-DESIGNED BY: THOMAS NGO
CHECKED BY: MARK PERTILE
REVISED BY
DATE REVISED

LAST REVISION 10-31-14
DATE PLOTTED => 31-OCT-2014
TIME PLOTTED => 13:18

Dist	COUNTY	ROUTE	POST MILES TOTAL PROJECT	SHEET No.	TOTAL SHEETS
08	Riv	371	67.7/72.9	37	161

REGISTERED CIVIL ENGINEER 10-31-14 DATE

10-13-14
PLANS APPROVAL DATE

REGISTERED PROFESSIONAL ENGINEER
LOI CHAN
No. 41893
Exp. 03-31-16
CIVIL
STATE OF CALIFORNIA

THE STATE OF CALIFORNIA OR ITS OFFICERS OR AGENTS SHALL NOT BE RESPONSIBLE FOR THE ACCURACY OR COMPLETENESS OF SCANNED COPIES OF THIS PLAN SHEET.

NOTES:

1. THE QUANTITY OF CONSTRUCTION SITE BMPs SHOWN ON THIS QUANTITY SHEET (WPCQ-1) ARE INTENDED TO BE USED AS GUIDE LINES ONLY. FIELD CONDITION MAY NECESSITATE MODIFICATION OR RELOCATION OF BMPs. AND ITS QUANTITIES AS PER INSTRUCTION OF ENGINEER.

TEMPORARY JOB SITE BMPs

TEMPORARY JOB SITE BMPs	UNIT	QUANTITITY
JOB SITE MANAGEMENT	LS	1
PREPARE STORM WATER POLLUTION PREVENTION PLAN	LS	1
STORM WATER ANNUAL REPORT	EA	3
MOVE-IN/MOVE-OUT (TEMPORARY EROSION CONTROL)	EA	10
TEMPORARY SOIL BINDER	SQYD	13500
TEMPORARY DRAINAGE INLET PROTECTION	EA	7
TEMPORARY FIBER ROLL	LF	2400
STREET SWEEPING	LS	1
TEMPORARY FENCE (TYPE ESA)	LF	800
~~ADDITIONAL WATER POLLUTION CONTROL~~	~~LS~~	~~1~~ 1
~~WATER POLLUTION CONTROL MAINTENANCE SHARING~~	~~LS~~	~~1~~ 1
~~STORM WATER SAMPLING AND ANALYSIS~~	~~LS~~	~~1~~ 1

1 REPLACED PER ADDENDUM No. 1 DATED OCTOBER 31, 2014

TEMPORARY WATER POLUTION CONTROL QUANTITIES

WPCQ-1

STATE OF CALIFORNIA - DEPARTMENT OF TRANSPORTATION
Caltrans
DESIGN

FUNCTIONAL SUPERVISOR: GEORGE MORHIG
CALCULATED-DESIGNED BY: LOI CHAN
CHECKED BY: LOI CHAN
REVISED BY
DATE REVISED

LAST REVISION 10-31-14
DATE PLOTTED => 31-OCT-2014
TIME PLOTTED => 13:18

Dist	COUNTY	ROUTE	POST MILES TOTAL PROJECT	SHEET No.	TOTAL SHEETS
08	Riv	371	67.7/72.9	67	161

REGISTERED CIVIL ENGINEER 10-31-14 DATE

10-13-14
PLANS APPROVAL DATE

REGISTERED PROFESSIONAL ENGINEER ALAN R. BISI No. 62808 Exp. 06-30-16 CIVIL STATE OF CALIFORNIA

THE STATE OF CALIFORNIA OR ITS OFFICERS OR AGENTS SHALL NOT BE RESPONSIBLE FOR THE ACCURACY OR COMPLETENESS OF SCANNED COPIES OF THIS PLAN SHEET.

NOTES:

1. THE PRECISE DETERMINATION OF THE FOLLOWING ITEMS WILL BE MADE BY THE ENGINEER IN THE FIELD: STATION, SKEW, LENGTH, FL ELEVATION, AND DEPTH OF STRUCTURE.
2. (N) - NOT A SEPARATE PAY ITEM; FOR INFORMATION ONLY.
3. CORRUGATIONS OF NEWLY INSTALLTED CULVERT SHALL MATCH THAT OF EXISTING CULVERT, UNLESS OTHERWISE DIRECTED BY ENGINEER.

LEGEND AND ABBREVIATIONS:

S - STANDARD JOINT TYPE
GA. - GAUGE
Bitum - BITUMINOUS
Ω - SEE DRAINAGE DETAIL
CSP - CORRUGATED STEEL PIPE
PA - POLYMERIZED ASPHALT
PS - POLYMERIC SHEET
w/ - WITH

SUITABLE PIPE COATINGS AND MINIMUM CULVERT THICKNESS

APPROVED CORROSION PROTECTION	CSP (2-2/3"x½") Min PIPE THICKNESS		
	18" CSP	48" CSP	126" X 240" CSP MULTI-PLATE ARCH
PLAIN GALVANIZED	N/A	12 GA. (0.109")	5 GA. (0.182")
Bitum COATING	N/A	12 GA. (0.109")	5 GA. (0.182")
Bitum COATING w/ PAVED INVERT	N/A	14 GA. (0.079")	N/A
PA / PS	16 GA. (0.064")	16 GA. (0.064")	5 GA. (0.182")

STRUCTURE CONCRETE, HEADWALL	MINOR CONCRETE (MINOR STRUCTURE)	BAR REINFORCING STEEL	CONCRETE COLLAR (N)	18" CSP (0.064" THICK)	48" CSP (0.109" THICK)	240" X 124" SSPAU, 2" X 6" CORRUGATED	18" ~~12"~~ ALTENATIVE FLARED END SECTION (1)	MAXIMUM COVER (N)	PIPE JOINT CLASSIFICATION (N)	CABLE RAILING	REMOVAL ITEMS: REMOVE CONCRETE	REMOVAL ITEMS: REMOVE PIPE	DESCRIPTION	STATION	ROADWAY LAYOUT SHEET No.	DRAINAGE PLAN SHEET No.	DRAINAGE SYSTEM No. ⬡	DRAINAGE UNIT ◯
CY	CY	Lb	EA	LF	LF	LF	EA	FT		LF	CY	LF						
			1										CONCRETE COLLAR, Ω No. 3	18.70' Rt 617+56.70 "A1" LINE	L-2	D-1	1	a
				5.0				2	S				18" CSP					b
							1						FES w/TOE PLATE	23.15' Rt 617+54.50 "A1" LINE				c
47.23		2030.0								40.0			CONCRETE WINGWALL w/CABLE RAILING, Ω No. 4, 5	25.00' Lt 746+76.00 "A1" LINE	L-11	D-1	2	a
						11.00		5					240" X 124" SSPAU					b
											48.03		REMOVE HW					c
16.30		195.00											CONCRETE FOOTING					d
	2.00												TYPE 'L' HW	41.00' Rt 760+40.50 "A1" LINE	L-12	D-2	3	a
				19.2				4	S				18" CSP					b
			1										CONCRETE COLLAR, Ω No. 3	22.00' Rt 760+41.30 "A1" LINE				c
											1.80		REMOVE HW					d
				29.5				4	S				18" CSP		L-12	D-2	4	a
												10.3	REMOVE 18" CMP					b
			1										CONCRETE COLLAR, Ω No. 3	15.60' Rt 760+53.95 "A1" LINE				c
							1						FES w/TOE PLATE	29.00' Rt 795+62.00 "A1" LINE	L-15	D-2	5	a
				5.5				5	S				18" CSP					b
			1										CONCRETE COLLAR, Ω No. 3	23.65' Rt 795+62.25 "A1" LINE				c
63.53	2.00	2225.0	4	59.2		11.00	2	20		40.0	49.83	10.3	SHEET TOTALS					

N-NOT A SEPARATE PAY ITEM, FOR INFORMATION ONLY.

(1) REPLACED PER ADDENDUM No. 1 DATED OCTOBER 31, 2014

APPROVED FOR DRAINAGE QUANTITIES WORK ONLY.

DRAINAGE QUANTITIES

DQ-1

STATE OF CALIFORNIA - DEPARTMENT OF TRANSPORTATION
Caltrans DESIGN

FUNCTIONAL SUPERVISOR: MARK PERTILE
CALCULATED-DESIGNED BY: ALAN R. BISI
CHECKED BY: MARK PERTILE
REVISED BY
DATE REVISED

LAST REVISION 10-31-14 | DATE PLOTTED => 31-OCT-2014 | TIME PLOTTED => 13:18

Dist	COUNTY	ROUTE	POST MILES TOTAL PROJECT	SHEET No.	TOTAL SHEETS
08	Riv	371	67.7/72.9	68	161

REGISTERED CIVIL ENGINEER 10-31-14 DATE

10-13-14
PLANS APPROVAL DATE

REGISTERED PROFESSIONAL ENGINEER ALAN R. BISI No. 62808 Exp. 06-30-16 CIVIL STATE OF CALIFORNIA

THE STATE OF CALIFORNIA OR ITS OFFICERS OR AGENTS SHALL NOT BE RESPONSIBLE FOR THE ACCURACY OR COMPLETENESS OF SCANNED COPIES OF THIS PLAN SHEET.

NOTES:

1. THE PRECISE DETERMINATION OF THE FOLLOWING ITEMS WILL BE MADE BY THE ENGINEER IN THE FIELD: STATION, SKEW, LENGTH, FL ELEVATION, AND DEPTH OF STRUCTURE.
2. (N) - NOT A SEPARATE PAY ITEM; FOR INFORMATION ONLY.
3. CORRUGATIONS OF NEWLY INSTALLTED CULVERT SHALL MATCH THAT OF EXISTING CULVERT, UNLESS OTHERWISE DIRECTED BY ENGINEER.

LEGEND AND ABBREVIATIONS:

S - STANDARD JOINT TYPE
GA. - GAUGE
Bitum. - BITUMINOUS
Ω - SEE DRAINAGE DETAIL
CSP - CORRUGATED STEEL PIPE
PA - POLYMERIZED ASPHALT
PS - POLYMERIC SHEET
w/ - WITH

SUITABALE PIPE COATINGS AND MINIMUM CULVERT THICKNESS

APPROVED CORROSION PROTECTION	CSP (2-2/3"x½") Min PIPE THICKNESS		
	18" CSP	48" CSP	240" X 126" CSP MULTI-PLATE ARCH
PLAIN GALVANIZED	N/A	12 GA. (0.109")	5 GA. (0.182")
Bitum COATING	N/A	12 GA. (0.109")	5 GA. (0.182")
Bitum COATING w/ PAVED INVERT	N/A	14 GA. (0.079")	N/A
PA / PS	16 GA. (0.064")	16 GA. (0.064")	5 GA. (0.182")

STRUCTURE CONCRETE, HEADWALL	MINOR CONCRETE (MINOR STRUCTURE)	BAR REINFORCING STEEL	CONCRETE COLLAR (N)	18" CSP (0.064" THICK)	48" CSP (0.109" THICK)	240" x 124" SSPAU, 2" X 6" CORRUGATED	18" ~~12"~~ ALTENATIVE FLARED END SECTION (1)	MAXIMUM COVER (N)	PIPE JOINT CLASSIFICATION (N)	CABLE RAILING	REMOVAL ITEMS: REMOVE CONCRETE	REMOVAL ITEMS: REMOVE PIPE	DESCRIPTION	STATION	ROADWAY LAYOUT SHEET No	DRAINAGE PLAN SHEET No	DRAINAGE SYSTEM No ⬡	DRAINAGE UNIT ◯
CY	CY	lb	EA	LF	LF	LF	EA	FT		LF	CY	LF						
	6.10									29.3			HW w/CABLE RAILING	31.00′ Rt 827+97.83 "A1" LINE	L-17	D-3	6	a
					13.10			4	S				48" CSP					b
			1										CONCRETE COLLAR, Ω No 3	18.00′ Rt 827+90.70 "A1" LINE				c
												6.0	REMOVE 48" CMP					d
											9.54		REMOVE HW					e
					13.20			4	S				48" CSP					f
												2.0	REMOVE 48" CSP					g
			1										CONCRETE COLLAR, Ω No 3	18.00′ Rt 827+96.75 "A1" LINE				h
					13.10			4	S				48" CSP					i
												2.0	REMOVE 48" CMP					j
			1										CONCRETE COLLAR, Ω No 3	18.70′ Rt 828+05.00 "A1" LINE				k
	6.10		3		39.40			12		29.3	9.54	10.0	SHEET TOTALS					
63.53	8.10	2225.0	7	59.20	39.40	11.0	2	32		69.3	59.37	20.3	GRAND TOTALS					

N-NOT A SEPARATE PAY ITEM, FOR INFORMATION ONLY.

(1) **REPLACED PER ADDENDUM No. 1 DATED OCTOBER 31, 2014**

APPROVED FOR DRAINAGE QUANTITY WORK ONLY.

DRAINAGE QUANTITIES

DQ-2

REVISED BY | DATE REVISED
ALAN R. BISI | MARK PERTILE
CALCULATED-DESIGNED BY | CHECKED BY
FUNCTIONAL SUPERVISOR: MARK PERTILE

STATE OF CALIFORNIA - DEPARTMENT OF TRANSPORTATION
Caltrans DESIGN

LAST REVISION | DATE PLOTTED => 31-OCT-2014
10-31-14 | TIME PLOTTED => 13:18

Dist	COUNTY	ROUTE	POST MILES TOTAL PROJECT	SHEET No.	TOTAL SHEETS
08	Riv	371	67.7/72.9	116	161

M.M. Kamgar Hayhyh 10-31-14
REGISTERED CIVIL ENGINEER DATE

10-13-14
PLANS APPROVAL DATE

REGISTERED PROFESSIONAL ENGINEER M.M.Kamgar No. 58039 Exp. 6-30-16 CIVIL STATE OF CALIFORNIA

THE STATE OF CALIFORNIA OR ITS OFFICERS OR AGENTS SHALL NOT BE RESPONSIBLE FOR THE ACCURACY OR COMPLETENESS OF SCANNED COPIES OF THIS PLAN SHEET.

PAVEMENT DELINEATION QUANTITIES

DETAIL NO.	PAVEMENT MARKERS				THERMOPLASTIC TRAFFIC STRIPE(SPRAYABLE)			THERMOPLASTIC TRAFFIC STRIPE	
	RETROREFLECTIVE (RECESSED)				4"	4"	4"	8"	8"
	TYPE C	TYPE G	TYPE D	TYPE H	WHITE SOLID	WHITE BROKEN	YELLOW SOLID	WHITE SOLID	WHITE BROKEN
	EA	EA	EA	EA	LF	LF	LF	LF	LF
6			130				6074		
12		32				1389			
19			100	200			4648		
22			930				11081		
27B					48617				
29			544				6528		
32			200				1920		
38		86						1954	
TOTAL	2222				80257			1954	

REMOVE PAVEMENT DELINEATION QUANTITIES

DETAIL No.	PAVEMENT MARKERS				TRAFFIC STRIPE			THERMOPLASTIC TRAFFIC STRIPE	
	REMOVE PAVEMENT MARKER (RECESSED)				4"	4"	4"	8"	8"
	TYPE C	TYPE G	TYPE D	TYPE H	WHITE SOLID	WHITE BROKEN	YELLOW SOLID	WHITE SOLID	WHITE BROKEN
	EA	EA	EA	EA	LF	LF	LF	LF	LF
6			130				6074		
12		32				1389			
19			100	200			4648		
22			930				11081		
27B									
29			544				6528		
32			200				1920		
38					1954				
TOTAL	2136				3343		30251		

1 1

RESET MARKER & DELINEATOR
EA
10

RESET MILE POST MARKER
EA
10

RESET ROADSIDE SIGN ONE POST
EA
25

RESET ROADSIDE SIGN TWO POST
EA
4

TREATED WOOD WASTE
LB
500

THERMOPLASTIC PAVEMENT MARKING

ITEM	INSTALL
	SQFT
TYPE VI ARROW	126
TYPE IV ARROW	165
12" THERMOPLASTIC	339
PED	36
XING	42
STOP	198
TOTAL	906

THERMOPLASTIC PAVEMENT MARKING

ITEM	REMOVE
	SQFT
TYPE VI ARROW	126
TYPE IV ARROW	165
12" THERMOPLASTIC	339
PED	36
XING	42
STOP	198
TOTAL	906

TEMPORARY PAVEMENT DELINEATION QUANTITIES

DETAIL No.	TEMPORARY PAVEMENT MARKERS				TEMPORARY TRAFFIC STRIPE (PAINT)		
	RETROREFLECTIVE				4"	4"	4"
		TYPE G	TYPE D	TYPE H	WHITE SOLID	WHITE BROKEN	YELLOW SOLID
		EA	EA	EA	LF	LF	LF
22			40				420
27B						880	
TOTAL			40		1300		

1 **REPLACED PER ADDENDUM No. 1 DATED OCTOBER 31, 2014**

APPROVED FOR PAVEMENT DELINEATION AND SIGN QUANTITIES WORK ONLY.

PAVEMENT DELINEATION & SIGN QUANTITIES

NO SCALE

PDQ-1

STATE OF CALIFORNIA - DEPARTMENT OF TRANSPORTATION
Caltrans® TRAFFIC DESIGN

FUNCTIONAL SUPERVISOR: Bill Wasser
CALCULATED-DESIGNED BY: Mehdi Kamgar
CHECKED BY: D NAMI
REVISED BY
DATE REVISED

LAST REVISION 10-31-14
DATE PLOTTED => 31-OCT-2014
TIME PLOTTED => 13:18

Dist	COUNTY	ROUTE	POST MILES TOTAL PROJECT	SHEET No.	TOTAL SHEETS
08	Riv	371	67.7/72.9	118	161

REGISTERED CIVIL ENGINEER 10-31-14 DATE

10-13-14
PLANS APPROVAL DATE

REGISTERED PROFESSIONAL ENGINEER THOMAS NGO No. 68383 Exp. 09-30-15 CIVIL STATE OF CALIFORNIA

THE STATE OF CALIFORNIA OR ITS OFFICERS OR AGENTS SHALL NOT BE RESPONSIBLE FOR THE ACCURACY OR COMPLETENESS OF SCANNED COPIES OF THIS PLAN SHEET.

ROADWAY QUANTITIES

LOCATION	LENGTH (N)	HMA (TYPE A)	RHMA-G	TOTAL CL2 AB	SHOULDER BACKING	COLD PLANE AREA (0.20 ft)	TACK COAT	LIQUID ASPHALT (PRIME COAT)	NOTES
	FT	TON	TON	YD3	TON	YD2	TON	TON	
600+40.00 TO 702+73.00 "A" LINE	10233	3330	6858	2753	1128	38304	4.11	8.71	
702+73.00 TO 711+86.00 "A" LINE	913	0	801	0	101	5933	0.49	0.00	
711+86.00 TO 743+33.44 "A" LINE	3147	810	1931	741	347	11343	1.19	2.34	
743+33.44 TO 747+58.07 "A" LINE	425	117	264	108	23	1526	0.16	0.34	
747+58.07 TO 748+50.00 "A" LINE	92	0	33	0	5	241	0.02	0.00	
748+50.00 TO 760+70.51 "A" LINE	1221	203	603	185	67	3721	0.37	0.59	
760+70.51 TO 769+00.00 "A" LINE	829	0	620	0	46	4589	0.38	0.00	
769+00.00 TO 775+35.00 "A" LINE	635	105	605	94	35	4105	0.37	0.30	
775+35.00 TO 783+88.00 "A" LINE	853	0	786	0	47	5822	0.49	0.00	
783+88.00 TO 786+42.00 "A" LINE	254	31	223	29	14	1539	0.14	0.09	
786+42.00 TO 789+43.00 "A" LINE	301	0	291	0	17	2154	0.18	0.00	
789+43.00 TO 794+57.30 "A" LINE	514	68	410	63	28	2784	0.25	0.20	
794+57.30 TO 802+48.00 "A" LINE	791	227	505	207	87	2913	0.31	0.65	
802+48.00 TO 813+31.30 "A" LINE	1083	139	797	126	60	5399	0.49	0.40	
813+31.30 TO 814+26.20 "A" LINE	95	0	67	0	5	494	0.04	0.00	
814+26.20 TO 841+10.00 "A" LINE	2684	720	1682	659	296	9828	1.04	2.08	
841+10.00 TO 857+50.00 "A" LINE	1640	409	997	374	90	5870	0.61	1.18	
857+50.00 TO 861+78.00 "A" LINE	428	142	300	130	47	1706	0.19	0.41	
861+78.00 TO 867+32.63 "A" LINE	555	74	413	67	31	2790	0.25	0.21	
867+32.63 TO 868+01.37 "A" LINE	69	0	48	0	4	354	0.03	0.00	
868+01.37 TO 872+00.00 "A" LINE	399	52	271	49	22	1812	0.17	0.15	
SUB TOTAL		6427	~~18300~~ 18505	5585	2500	113227	11.3	17.65	
TOTAL		6427	1	5585	2500	113227	11.3	17.65	
TOTAL HMA-A (DIKE)		367.9							
TOTAL HMA-A DRIVEWAY (SEE Q3)		456.4							
TOTAL HMA-A SAFETY EDGE (SEE Q3)		396							
TOTAL HMA-A DOWNDRAIN/OVERSIDE (SEE Q8)		102.81							
GRAND TOTAL		7750.11	18505	5585	2500	113227	11.3	17.65	

N-NOT A SEPARATE PAY ITEM, FOR INFORMATION ONLY.

HMA DIKE QUANTITIES

SIDE		LOCATION			PLACE HMA DIKE			HMA-A (FOR DIKE)	HMA-A (UNDER DIKE)
					TYPE C	TYPE E	TYPE F		
L+	R+	FROM	TO	LINE	FT	FT	FT	TON	TON
L+		STA 617+65.00	STA 618+75.00	"A"		110		2.6	1.7
L+		STA 621+68.00	STA 623+63.00	"A"		196.1		4.6	2.9
L+		STA 623+97.00	STA 627+25.00	"A"		329.1		7.8	4.9
L+		STA 630+50.00	STA 632+00.00	"A"		150		3.6	2.3
	R+	STA 636+50.00	STA 637+82.00	"A"		132		3.1	2.0
L+		STA 635+98.00	STA 640+00.00	"A"		402		9.5	6.0
L+		STA 642+12.00	STA 651+00.64	"A"		898.5		21.3	13.5
	R+	STA 647+57.00	STA 649+37.57	"A"		180.6		4.3	2.7
L+		STA 651+54.22	STA 654+70.00	"A"		316.4		7.5	4.8
L+		STA 667+51.00	STA 678+88.00	"A"		1137		26.9	17.1
	R+	STA 667+85.00	STA 678+30.00	"A"		1045		24.8	15.7
L+		STA 669+50.00	STA 700+32.89	"A"		82.9		2.0	1.2
L+		STA 700+32.89	STA 701+07.90	"A"	75			0.5	0.6
L+		STA 701+07.90	STA 702+00.00	"A"			92.1	1.1	0.7
	R+	STA 667+50.00	STA 700+53.88	"A"		303.9		7.2	4.6
	R+	STA 700+53.88	STA 701+28.90	"A"	75			0.5	0.6
	R+	STA 701+28.90	STA 704+53.77	"A"			325	3.9	2.4
	R+	STA 704+53.77	STA 705+20.00	"A"	66.3			0.5	0.5
L+		STA 715+23.49	STA 718+97.00	"A"		373.5		8.8	5.6
	R+	STA 714+44.79	STA 718+21.80	"A"		377		8.9	5.7
L+		STA 720+15.45	STA 724+00.00	"A"		385		9.1	5.8
	R+	STA 718+70.44	STA 728+00.00	"A"		929.6		22.0	14.0
	R+	STA 760+00.00	STA 760+57.43	"A"		72.8		1.7	1.1
L+		STA 841+10.00	STA 859+00.00	"A"		1790		42.4	26.9
SUB TOTAL					216.3	9211.4	417.1	224.6	143.3
TOTAL					216.3	9211.4	417.1	367.9	

1 REPLACED PER ADDENDUM No. 1 DATED OCTOBER 31, 2014

SUMMARY OF QUANTITIES

Q-1

STATE OF CALIFORNIA - DEPARTMENT OF TRANSPORTATION
Caltrans DESIGN
FUNCTIONAL SUPERVISOR MARK PERTILE
CALCULATED-DESIGNED BY THOMAS NGO
CHECKED BY MARK PERTILE
REVISED BY
DATE REVISED

LAST REVISION 10-31-14
DATE PLOTTED => 31-OCT-2014
TIME PLOTTED => 13:18

Dist	COUNTY	ROUTE	POST MILES TOTAL PROJECT	SHEET No.	TOTAL SHEETS
08	Riv	371	67.7/72.9	120	161

REGISTERED CIVIL ENGINEER DATE 10-31-14

PLANS APPROVAL DATE 10-13-14

REGISTERED PROFESSIONAL ENGINEER THOMAS NGO No. 68383 Exp. 09-30-15 CIVIL STATE OF CALIFORNIA

THE STATE OF CALIFORNIA OR ITS OFFICERS OR AGENTS SHALL NOT BE RESPONSIBLE FOR THE ACCURACY OR COMPLETENESS OF SCANNED COPIES OF THIS PLAN SHEET.

SAFETY EDGE

LOCATION				(N) SAFETY EDGE	HMA (TYPE A)
STATION	LINE	SIDE			
		Lt	Rt	FT	TON
600+40.04 to 607+29.25	A	Lt		689	9.06
600+40.04 to 615+14.67	A		Rt	1475	19.38
608+73.78 to 609+23.00	A	Lt		49	0.65
609+79.00 to 609+99.00	A	Lt		20	0.26
610+67.00 to 612+04.00	A	Lt		137	1.80
612+59.00 to 619+65.00	A	Lt		506	6.65
615+81.32 to 625+67.18	A		Rt	986	12.96
618+75.00 to 621+68.00	A	Lt		293	3.85
626+52.82 to 632+53.86	A		Rt	601	7.90
627+25.00 to 630+50.00	A	Lt		325	4.27
632+00.00 to 635+98.00	A	Lt		398	5.23
634+48.00 to 635+98.00	A		Rt	202	2.66
637+82.00 to 640+12.00	A		Rt	230	3.02
640+00.00 to 642+12.00	A	Lt		212	2.79
640+98.00 to 647+57.00	A		Rt	659	8.66
651+64.35 to 667+85.00	A		Rt	1623	21.33
654+70.00 to 666+67.46	A	Lt		1197	15.74
667+30.46 to 667+51.00	A	Lt		21	0.27
678+30.00 to 679+25.03	A		Rt	95	1.25
678+88.00 to 699+50.00	A	Lt		2064	27.13
680+31.53 to 697+50.00	A		Rt	1716	22.56
711+86.00 to 713+18.53	A		Rt	133	1.74
712+70.00 to 714+59.50	A	Lt		190	2.49
719+81.00 to 720+15.00	A	Lt		34	0.45
724+00.00 to 743+93.64	A	Lt		1997	26.25
728+00.00 to 743+33.44	A		Rt	1530	20.11
748+50.00 to 760+00.00	A		Rt	1150	15.12
769+00.00 to 770+26.00	A	Lt		126	1.66
771+18.00 to 771+83.00	A	Lt		65	0.85
772+39.00 to 775+35.00	A	Lt		296	3.89
783+88.00 to 786+42.00	A		Rt	254	3.34
790+50.07 to 813+31.30	A	Lt		2181	28.67
794+57.30 to 802+48.00	A		Rt	791	10.40
814+26.20 to 825+63.40	A	Lt		1137	14.95
815+48.00 to 820+45.34	A		Rt	497	6.54
821+24.78 to 826+71.38	A		Rt	547	7.18
826+48.50 to 826+70.00	A	Lt		22	0.28
829+24.31 to 840+40.73	A	Lt		1116	14.67
829+25.00 to 840+51.07	A		Rt	1126	14.80
841+03.74 to 841+10.00	A	Lt		6	0.08
841+21.07 to 854+05.00	A		Rt	1284	16.88
854+61.01 to 861+78.00	A		Rt	718	9.43
857+50.00 to 867+32.63	A	Lt		983	12.92
868+01.37 to 872+00.00	A	Lt		399	5.24
TOTAL				30080	396

(N) NOT A SEPARATE PAY ITEM, FOR INFORMATION ONLY.

EARTHWORK QUANTITIES

STATION	ROADWAY EXCAVATION	(N) EMBANKMENT
	CY	CY
600+40.00 TO 702+73.00 "A" LINE	6951.8	895.5
702+73.00 TO 711+86.00 "A" LINE	0.0	0.0
711+86.00 TO 743+33.44 "A" LINE	2396.9	219.3
743+33.44 TO 747+58.07 "A" LINE	90.8	192.6
747+58.07 TO 748+50.00 "A" LINE	66.4	1.4
748+50.00 TO 760+70.51 "A" LINE	172.1	92.4
760+70.51 TO 769+00.00 "A" LINE	425.7	71.8
769+00.00 TO 775+35.00 "A" LINE	144.7	1.2
775+35.00 TO 783+88.00 "A" LINE	288.5	12.4
783+88.00 TO 786+42.00 "A" LINE	56.0	1.9
786+42.00 TO 789+43.00 "A" LINE	60.1	5.6
789+43.00 TO 794+57.30 "A" LINE	87.0	10.6
794+57.30 TO 802+48.00 "A" LINE	300.6	115.2
802+48.00 TO 813+31.30 "A" LINE	641.7	45.2
813+31.30 TO 814+26.20 "A" LINE	13.5	1.1
814+26.20 TO 841+10.00 "A" LINE	983.3	390.3
841+10.00 TO 857+50.00 "A" LINE	364.2	257.1
857+50.00 TO 861+78.00 "A" LINE	111.4	39.7
861+78.00 TO 867+32.63 "A" LINE	90.0	11.9
867+32.63 TO 868+01.37 "A" LINE	0.0	0.0
868+01.37 TO 872+00.00 "A" LINE	34.8	9.4
SUB TOTAL	~~14768.8~~ 13279.5 (1)	2374.3
INFILTRATION STRIP EXCAVATION (Q-5)	769.9	
GRAND TOTAL	~~15538.7~~ 14049.4 (1)	2374.3

ADJUST UTILITIES COVER TO GRADE

STATION	QUANTITY
	EA
18.05' Lt "A" STA 601+26.82	1
17.34' Lt "A" STA 629+89.88	1
20.09' Lt "A" STA 638+96.98	1
14.98' Lt "A" STA 647+86.57	1
16.48' Lt "A" STA 653+82.85	1
16.58' Lt "A" STA 678+82.79	1
22.70' Lt "A" STA 772+86.40	1
GRAND TOTAL	7

PLACE HMA (Misc AREAS)

LOCATION	(N) DRIVE WAY		HMA (TYPE A)	MINOR CONCRETE (Misc Cons)	LAYOUT
	LT	RT			
STATION	SQFT	SQFT	TON	CY	
48' Lt "A" STA 608+17.7	1448.3		39.1		L-2
38' Lt "A" STA 609+50.00	391.1		10.6		L-2
38' Lt "A" STA 610+33.00	607.1		16.4		L-2
38' Lt "A" STA 612+24.00	681.6		18.4		L-2
32' Rt "A" STA 615+48.00		428.7	11.6		L-2
45' Lt "A" STA 623+80.00	674.3		18.2		L-3
38' Rt "A" STA 626+10.00		919.9	24.8		L-3
45' Rt "A" STA 640+55.00		1138.3	30.7		L-4
45' Lt "A" STA 651+18.00	1846.5		49.9		L-5
46.3' Rt "A" STA 667+01.50	564.9		15.3		L-6
45' Lt "A" STA 679+76.00		1490.8	40.3		L-7
48' Rt "A' STA 713+56.90		899.0	24.3		L-9
40' Rt "A" STA 714+20.80		770.5		9.2	L-9
34.3' Lt "A" STA 714+93.00	486.4		13.1		L-9
46.7' Rt "A" STA 718+54.00		495.3	13.4		L-9

PLACE HMA (Misc AREAS Cont.)

LOCATION	(N) DRIVE WAY		HMA (TYPE A)	MINOR CONCRETE (Misc Cons)	LAYOUT
	LT	RT			
STATION	SQFT	SQFT	TON	CY	
34.3' Lt "A" STA 719+46.50	526.4		14.2		L-9
44' Rt "A" STA 745+34.00		1163.7	31.4		L-11
50' Lt "A" STA 770+72.00	1183.8			17.5	L-13
38' Lt "A" STA 772+11.00	397.2			5.9	L-13
38' Rt "A" STA 820+85.00		766.8	20.7		L-17
34' Lt "A" STA 826+06.00	857.7		23.2		L-17
37' Lt "A" STA 840+73.30	616.9		16.7		L-18
47.6' Rt "A" STA 840+86.00		604.6	16.3		L-18
36.7' Rt "A" STA 854+33.00		294.0	7.9		L-19
SUB TOTAL	10282.2	8971.6	456.4	32.6	
TOTAL (SQYD)	2139.3				
TOTAL Misc AREAS DRAINAGE QUANTITIES)	58.5				
TOTAL	2197.8		456.4	32.6	

(1) REPLACED PER ADDENDUM No. 1 DATED OCTOBER 31, 2014

SUMMARY OF QUANTITIES

Q-3

STATE OF CALIFORNIA - DEPARTMENT OF TRANSPORTATION

Caltrans DESIGN

FUNCTIONAL SUPERVISOR MARK PERTILE

CALCULATED-DESIGNED BY THOMAS NGO

CHECKED BY MARK PERTILE

REVISED BY

DATE REVISED

LAST REVISION 10-31-14

DATE PLOTTED => 31-OCT-2014

TIME PLOTTED => 13:18

Dist	COUNTY	ROUTE	POST MILES TOTAL PROJECT	SHEET No.	TOTAL SHEETS
08	Riv	371	67.7/72.9	121	161

REGISTERED CIVIL ENGINEER 10-31-14 DATE

10-13-14
PLANS APPROVAL DATE

REGISTERED PROFESSIONAL ENGINEER THOMAS NGO No. 68383 Exp. 09-30-15 CIVIL STATE OF CALIFORNIA

THE STATE OF CALIFORNIA OR ITS OFFICERS OR AGENTS SHALL NOT BE RESPONSIBLE FOR THE ACCURACY OR COMPLETENESS OF SCANNED COPIES OF THIS PLAN SHEET.

REMOVE TREE

STATION	LAYOUT	LINE	DIRECTION WB/EB	TREES DIAMETER	TREE NAME	LOCATION	PROTECT IN PLACE	REMOVE
710+55.12	L-9	A	WB	1.50′	PINE	40.88′ Lt Sta 710+55.12		X
710+63.07	L-9	A	WB	1.50′	PINE	41.6′ Lt Sta 710+63.07		X
710+71.94	L-9	A	WB	1.50′	PINE	40.98′ Lt Sta 710+71.94		X
710+81.19	L-9	A	WB	1.50′	PINE	41.52′ Lt Sta 710+81.19		X
771+45.45	L-13	A	WB	3.0′	CEDAR	39.31′ Lt Sta 771+45.45	X	
771+75.86	L-13	A	WB	3.0′	CEDAR	34.34′ Lt Sta 771+75.86		X
772+67.09	L-13	A	WB	3.0′	CEDAR	35.50′ Lt Sta 772+67.09		X
774+07.50	L-13	A	WB	3.0′	CEDAR	37.25′′ Lt Sta 774+07.50		X
774+36.42	L-13	A	WB	3.0′	CEDAR	37.48′′ Lt Sta 774+36.42	X	~~X~~ 1
774+64.17	L-13	A	WB	3.0′	CEDAR	37.27′′ Lt Sta 774+64.17		X
776+06.08	L-14	A	WB	3.0′	CEDAR	37.69′ Lt Sta 776+06.08		X
776+33.74	L-14	A	WB	3.0′	CEDAR	36.76′ Lt Sta 776+33.74		X
777+20.52	L-14	A	WB	3.0′	PINE	36.67′ Lt Sta 777+20.52		X
777+32.28	L-14	A	WB	3.0′	WALNUT	37.42′ Lt Sta 777+32.28		X
777+50.16	L-14	A	WB	1.5′	CEDAR	37.73′ Lt Sta 777+50.16		X
778+56.96	L-14	A	EB	2.5′	TREE	43.96′ Rt Sta 778+56.96		X
779+57.94	L-14	A	EB	1.5′	TREE	41.76′ Rt Sta 779+57.94		X
782+29.60	L-14	A	EB	2.5′	PINE	39.09′ Rt Sta 782+29.60		X
782+60.77	L-14	A	WB	1.5′	TREE	37.80′ Lt Sta 782+60.77		X
782+91.25	L-14	A	WB	1.5′	TREE	37.45′ Rt Sta 782+91.25		X
783+20.74	L-14	A	WB	1.5′	TREE	37.33′ Lt Sta 783+20.74		X
783+50.48	L-14	A	WB	2.5′	TREE	36.63′ Lt Sta 783+50.48		X 1
						TOTAL	2	20

TEMPORARY FENCE (TYPE ESA)

STATION	TEMPORARY FENCE (TYPE ESA) LF
743+50.00 TO 744+99.00 "A" LINE	158.5
812+00 TO 813+70.00 "A" LINE	192.0
TOTAL	350.5

RUMBLE STRIP

LINE	LOCATION	Lt Shld	MEDIAN	Rt Shld	STATION	SHOULDER RUMBLE STRIP (GROUND-IN IDENTATION) Sta	CENTERLINE RUMBLE STRIP (GROUND-IN IDENTATION) Sta
A	ROUTE 371	X			600+40 TO 764+00	163.5	
A	ROUTE 371			X	600+40 TO 764+00	163.5	
A	ROUTE 371		X		600+40 TO 764+00		163.5
					TOTAL	327	163.5

MAILBOX

STATION	MAILBOX RESET EA	MAILBOX RELOCATE EA
36.7′ Lt "A" STA 609+83	9	
25.4′ Rt "A" STA 639+91.5	6	
29.6′ Lt "A" STA 653+07.5 TO 27.6′ Lt "A" STA653+37.3		23
TOTAL	15	23

1 REPLACED PER ADDENDUM No. 1 DATED OCTOBER 31, 2014

SUMMARY OF QUANTITIES

Q-4

STATE OF CALIFORNIA - DEPARTMENT OF TRANSPORTATION
Caltrans DESIGN
FUNCTIONAL SUPERVISOR MARK PERTILE
CALCULATED-DESIGNED BY THOMAS NGO
CHECKED BY MARK PERTILE
REVISED BY
DATE REVISED

LAST REVISION 10-31-14
DATE PLOTTED => 31-OCT-2014
TIME PLOTTED => 13:18

Dist	COUNTY	ROUTE	POST MILES TOTAL PROJECT	SHEET No.	TOTAL SHEETS
08	Riv	371	67.7 /72.9	128	161

LICENSED LANDSCAPE ARCHITECT

10-13-14

PLANS APPROVAL DATE

LICENSED LANDSCAPE ARCHITECT (Name & License No.) Signature 11/30/15 Renewal Date 10/31/14 Date STATE OF CALIFORNIA

THE STATE OF CALIFORNIA OR ITS OFFICERS OR AGENTS SHALL NOT BE RESPONSIBLE FOR THE ACCURACY OR COMPLETENESS OF SCANNED COPIES OF THIS PLAN SHEET.

1 NOTE:
JUTE MESH MATERIALS AND DETAIL CONSTRUCTION INSTALLATION REQUIREMENT REFER TO STANDARD PLAN

EROSION CONTROL (TYPE 1 - SLOPES 4:1 OR FLATTER)

SYMBOL	SEQUENCE	ITEM	MATERIALS DESCRIPTION	MATERIALS TYPE	APPLICATION RATE	UNIT	QUANTITIES
	STEP 1	E C (BFM)	SEED	MIX	30.0 LB PURE LIVE SEEDS/ACRE	AC	6.69
			FIBER	WOOD	3000 LB/AC		
			TACKIFIER	ORGANIC			

EROSION CONTROL (TYPE 2 - SLOPES 2:1 OR STEEPER)

SYMBOL	SEQUENCE	ITEM	MATERIALS DESCRIPTION	MATERIALS TYPE	APPLICATION RATE	UNIT	QUANTITIES	NOTES
	STEP 1	RECP (JUTE MESH)	AN OPEN WEAVE TEXTILE COMPOSED OF NATURAL YARNS OR TWINES WOVEN INTO A CONTINUOUS MATRIX	ECTC TYPE 3B	SPECIFIED (STD SPEC'S)	AC	6	-
	STEP 2	EC (BFM)	SEED	MIX	30.0 LB PURE LIVE SEEDS/ACRE	AC	6	-
			FIBER	WOOD	3000 LB/AC FOR SLOPES > 4:1 AND < 3:1(HORIZ:VERT) 3500 LB/AC FOR SLOPES > 3:1 AND < 2:1(HORIZ:VERT) 4000 LB/AC FOR SLOPES > 2:1 AND < 1:1(HORIZ:VERT)			
			TACKIFIER	ORGANIC				

EROSION CONTROL (BFM)QUANTITIES

ITEM	TOTAL
EC(BFM)	12.69

FIBER ROLLS

SEQUENCE	ITEM	MATERIALS DESCRIPTION	MATERIALS TYPE	APPLICATION RATE	DEPTH	UNIT	QUANTITIES	NOTES
STEP 1	FIBER ROLLS	NATURAL FIBER MATERIALS	TYPE B	SPECIFIED (STD SPEC'S)	-	LF	24041	INSTALL FIBER ROLLS AT THE TOE OF SLOPE

1 **REPLACED PER ADDENDUM No. 1 DATED OCTOBER 31, 2014**

~~APPROVED FOR EROSION CONTROL LEGEND ONLY~~ 1

EROSION CONTROL LEGEND

ECL-1

STATE OF CALIFORNIA - DEPARTMENT OF TRANSPORTATION
Caltrans® LANDSCAPE ARCHITECTURE

SENIOR LANDSCAPE ARCHITECT: RAY DESSELLE
CALCULATED-DESIGNED BY: MARY-ANN JOHNS
CHECKED BY: JOHN STANTON
REVISED BY
DATE REVISED

LAST REVISION 10-31-14
DATE PLOTTED => 31-OCT-2014
TIME PLOTTED => 13:18

Dist	COUNTY	ROUTE	POST MILES TOTAL PROJECT	SHEET No.	TOTAL SHEETS
08	Riv	371	67.7 /72.9	128A	161

LICENSED LANDSCAPE ARCHITECT

10-13-14

PLANS APPROVAL DATE

LICENSED LANDSCAPE ARCHITECT — Theme & License Apply — Expiration Date 11/30/15 — Renewal Date 10/31/14 Date — STATE OF CALIFORNIA

THE STATE OF CALIFORNIA OR ITS OFFICERS OR AGENTS SHALL NOT BE RESPONSIBLE FOR THE ACCURACY OR COMPLETENESS OF SCANNED COPIES OF THIS PLAN SHEET.

1

DESCRIPTION

APPLICABLE WHEN CIRCLED:

(1) - QUANTITIES SHOWN ARE "PER PLANT" UNLESS SHOWN AS CUFT OR SQYD APPLICATION RATE

2 -BASIN MULCH IS INCLUDED IN MULCH QUANTITIES SHOWN ON PLANTING PLANS

(3) -2 x DIAMETER, 1 X DEPTH OR ROOT BALL

4 -SEE DETAIL

5 -SEE SPECIAL PROVISION

6 -SEE STANDARD SPECIFICATIONS

7 - UNLESS OTHER WISE SHOWN ON THE PLANS

(8) - FOLIAGE PROTECTION REQUIRED

(9) - ROOT PROTECTOR REQUIRED

10 - ROOT BARRIER REQUIRED

11 - STATE FURNISH

(12) - JUTE MESH MATERIALS AND DETAIL CONSTRUCTION INSTALLATION REQUIREMENT REFER TO STANDARD PLAN

ABBREVIATION:

S - SPHAGNUM PEAT MOSS

N - NITROLIZED FIR SHAVINGS

V - VIRMICULITE

P - PERLITE

TB - TREE BARK

WC - WOOD CHIP

SP - SHEDDED BARK

TT - TREE TREMMING

PLANT No.	SYMBOL	BOTANICAL NAME	COMMON NAME	SIZE	QUANTITY EACH	HOLE SIZE (INCH)		BASIN TYPE	SOIL AMEND (1)		SLOW RELEASE FERTILIZER (1)		BASIN MULCH (CY)	STAKING	PLANTING LIMITS							REMARKS
															MINIMUM DISTANCE (Ft) FROM						ON CENTER (ft)	
						Dia	DEPTH		TYPE	RATE	PLANTING	PLT ESTB			ETW	Pvmt	FENCE	WALL	PAVED DITCH	EARTH DITCH		
U		PINUS COULTERI	COULTER PINE	15 Gal	30	(3)	(3)	(1)	N	.06 cy	1/4 LB	1/4 LB	—	—	30	25	—	—	—	—	—	(8) (9)
A		PINUS COULTERI	COULTER PINE	5 Gal	30	(3)	(3)	(1)	N	.03 CY	1/3 LB	1/3 LB	—	—	30	25	—	—	—	—	—	(8) (9)
H		SALIX LASIOLEPSIS	AROYO WILLOW	POLE	250	(3)	(3)	—	—	—	—	—	—	—	30	25	—	—	—	—	—	BUNDLE BRANCH CUTTINGS 8 TO 10 GROWING TIPS PROTRUDE FROM SLOPE FACE
									TOTAL 2 CY		20 Lbs											

SEED MIX

BOTANICAL NAME (COMMON NAME)	PERCENT GERMINATION (MINIMUM)	POUNDS PURE LIVE SEED PER ACRE (SLOPE MEASUREMENT)
Arcillea millefolium (White Yarrow)	70	6.0
Artemesia ludoviciana (Siver Wormwood)	30	4.00
Bromus carinatus (California Broom)	50	3.00
Festuca (vulpia)microstachys (Small Fescue)	50	4.00
Lasthenia californica (Dwarf Golfields)	30	1.5
Lotus scoparius (Deerweed)	40	2.00
Lupinus formosos (Western Lupine)	70	6.0
Lupinus bicolor (Pigmy-leaved Lupine)	50	3.00
Melica imperfecta (Small Flower Melica)	40	4.0
Poa Seconda (Pine Blugrass)	50	6.0
Stipa (Nassella) cernua (Nooding Needlegrass)	50	6.0
Stipa (Nassella) lepida (Foothill Needlegrass)	50	2.0
	TOTAL	47.5

1 ADDED PER ADDENDUM No. 1 DATED OCTOBER 31, 2014

PLANT LIST

PL-1

STATE OF CALIFORNIA - DEPARTMENT OF TRANSPORTATION

Caltrans LANDSCAPE ARCHITECTURE

SENIOR LANDSCAPE ARCHITECT: RAY DESSELLE

CALCULATED-DESIGNED BY: MARY-ANN JOHNS

CHECKED BY: JOHN STANTON

REVISED BY / DATE REVISED

LAST REVISION 10-31-14 — DATE PLOTTED => 31-OCT-2014 — TIME PLOTTED => 13:18

Dist	COUNTY	ROUTE	POST MILES TOTAL PROJECT	SHEET No.	TOTAL SHEETS
08	Riv	371	67.7/72.9	130	161

LICENSED LANDSCAPE ARCHITECT

10-13-14

PLANS APPROVAL DATE

LICENSED LANDSCAPE ARCHITECT (Name & License No.) Signature 11/30/15 Renewal Date 10/31/14 Date STATE OF CALIFORNIA

THE STATE OF CALIFORNIA OR ITS OFFICERS OR AGENTS SHALL NOT BE RESPONSIBLE FOR THE ACCURACY OR COMPLETENESS OF SCANNED COPIES OF THIS PLAN SHEET.

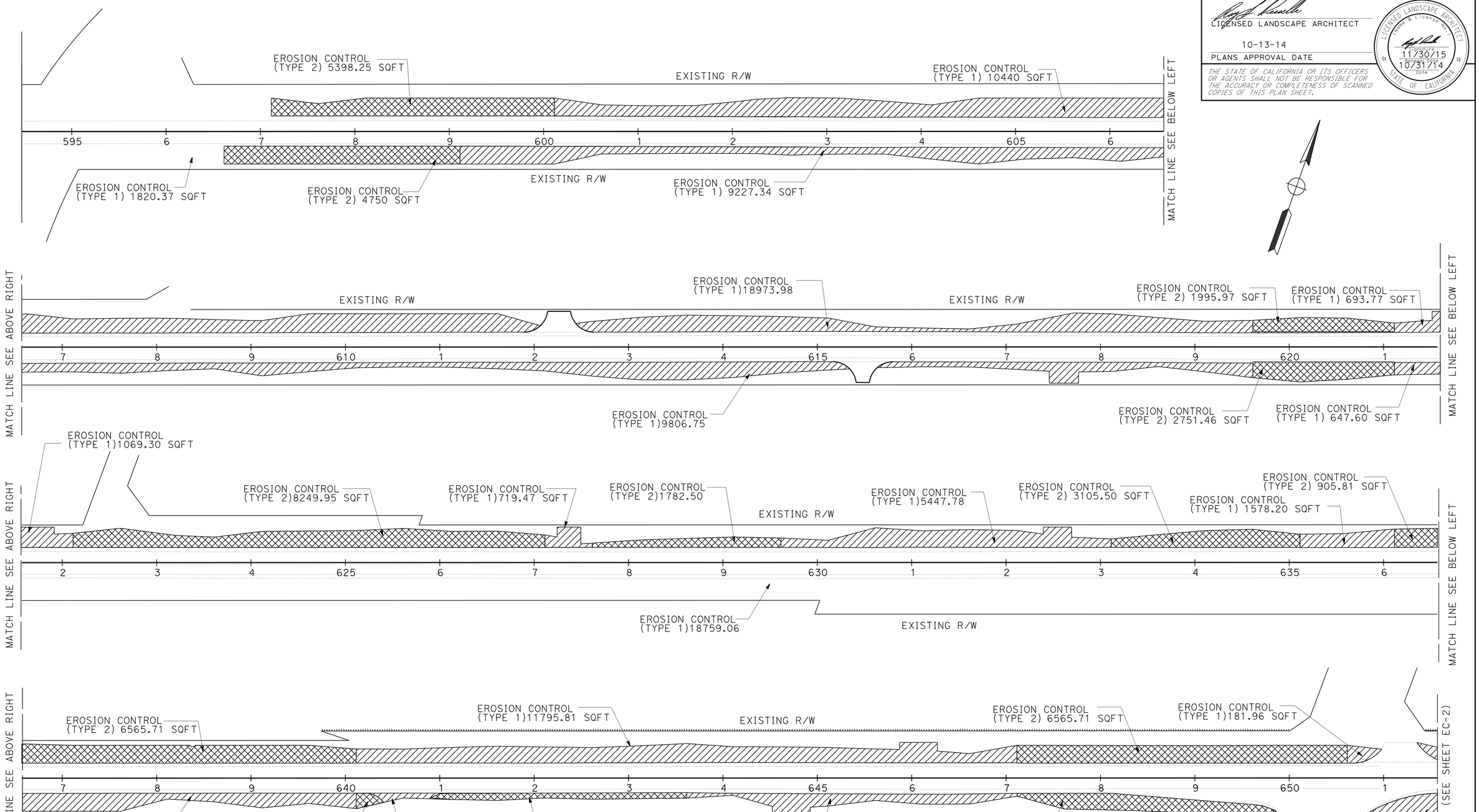

1 REPLACED PER ADDENDUM No. 1 DATED OCTOBER 31, 2014

APPROVED FOR EROSION CONTROL PLAN ONLY 1

EROSION CONTROL PLAN

SCALE: 1" = 50'

EC-1

STATE OF CALIFORNIA - DEPARTMENT OF TRANSPORTATION

Caltrans® LANDSCAPE ARCHITECTURE

SENIOR LANDSCAPE ARCHITECT: RAY DESSELLE

CALCULATED-DESIGNED BY: MARY ANN JOHNS

CHECKED BY: JOHN STANTON

REVISED BY

DATE REVISED

LAST REVISION 10-31-14

DATE PLOTTED => 31-OCT-2014

TIME PLOTTED => 13:18

Dist	COUNTY	ROUTE	POST MILES TOTAL PROJECT	SHEET No.	TOTAL SHEETS
08	Riv	371	67.7/72.9	131	161

LICENSED LANDSCAPE ARCHITECT

10-13-14

PLANS APPROVAL DATE

LICENSED LANDSCAPE ARCHITECT — Renewal Date 11/30/15 — Date 10/31/14 — STATE OF CALIFORNIA

THE STATE OF CALIFORNIA OR ITS OFFICERS OR AGENTS SHALL NOT BE RESPONSIBLE FOR THE ACCURACY OR COMPLETENESS OF SCANNED COPIES OF THIS PLAN SHEET.

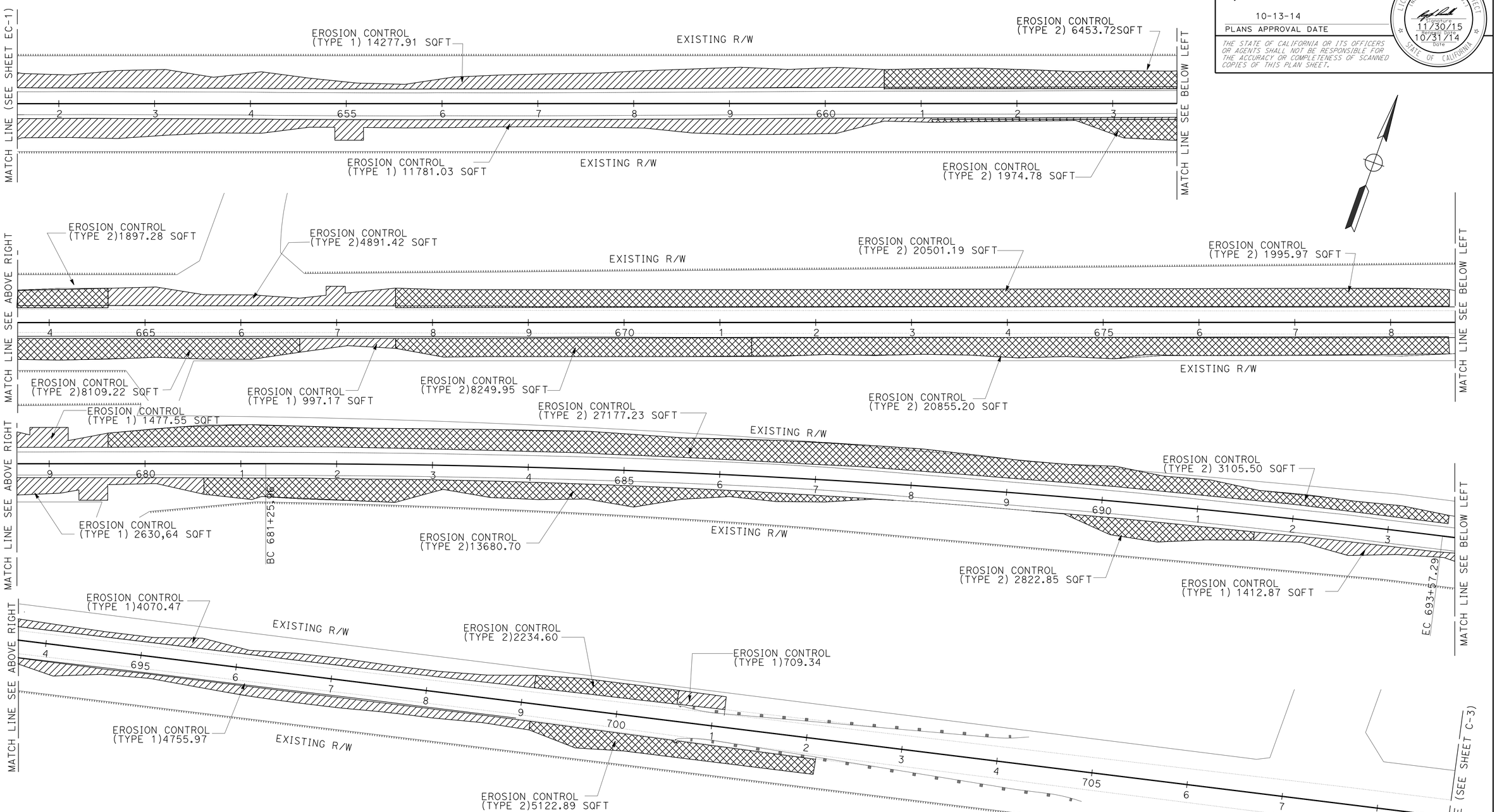

1 REPLACED PER ADDENDUM No. 1 DATED OCTOBER 31, 2014

APPROVED FOR EROSION CONTROL PLAN ONLY 1

EROSION CONTROL PLAN

SCALE: 1" = 50'

EC-2

STATE OF CALIFORNIA - DEPARTMENT OF TRANSPORTATION

Caltrans® LANDSCAPE ARCHITECTURE

SENIOR LANDSCAPE ARCHITECT: RAY DESSELLE

CALCULATED-DESIGNED BY: MARY ANN JOHNS

CHECKED BY: JOHN STANTON

REVISED BY / DATE REVISED

LAST REVISION 10-31-14

DATE PLOTTED => 31-OCT-2014
TIME PLOTTED => 13:18

Dist	COUNTY	ROUTE	POST MILES TOTAL PROJECT	SHEET No.	TOTAL SHEETS
08	Riv	371	67.7/72.9	132	161

LICENSED LANDSCAPE ARCHITECT

10-13-14

PLANS APPROVAL DATE

LICENSED LANDSCAPE ARCHITECT (Name & License No.) Signature 11/30/15 Renewal Date 10/31/14 Date STATE OF CALIFORNIA

THE STATE OF CALIFORNIA OR ITS OFFICERS OR AGENTS SHALL NOT BE RESPONSIBLE FOR THE ACCURACY OR COMPLETENESS OF SCANNED COPIES OF THIS PLAN SHEET.

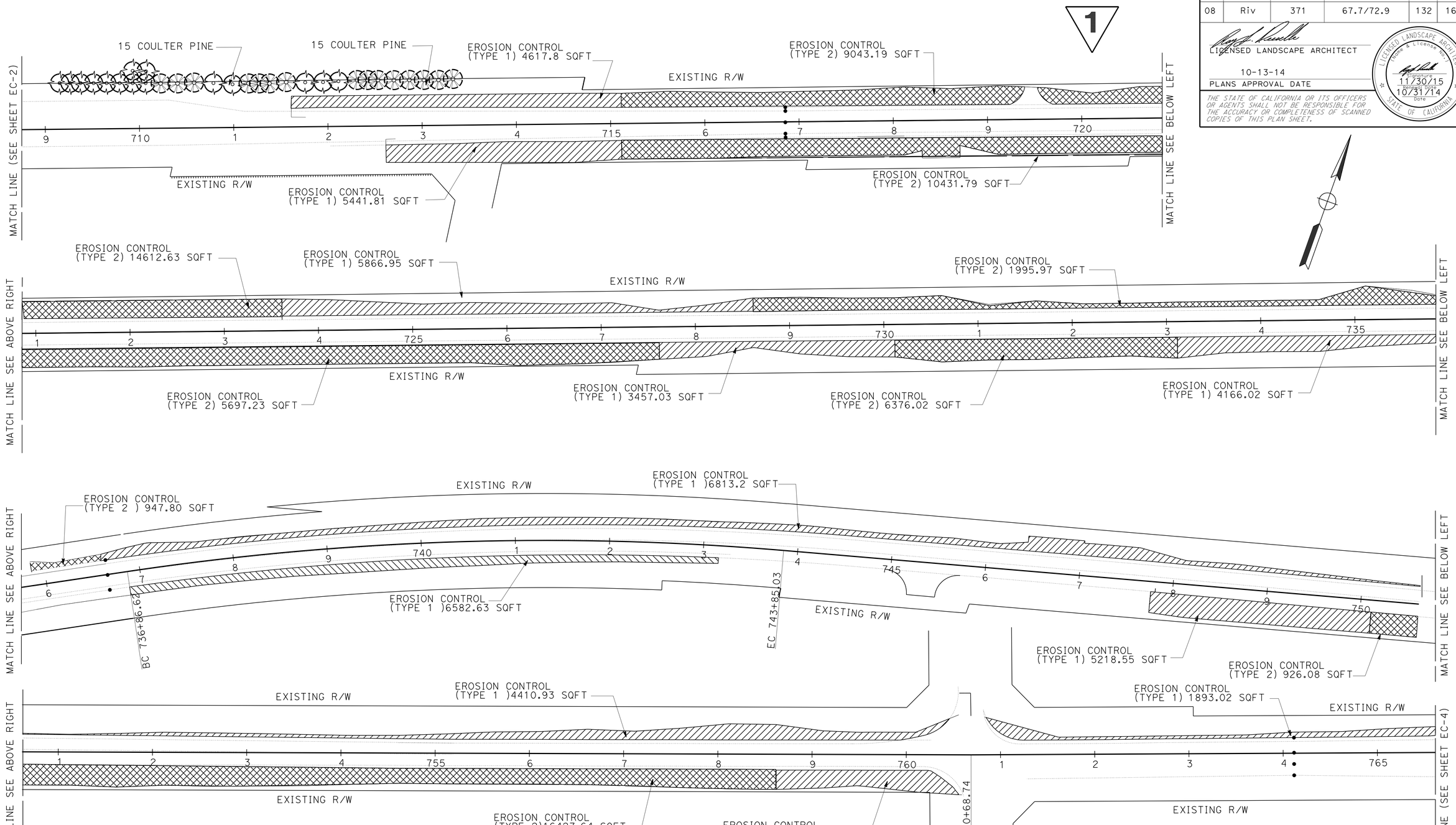

1 **REPLACED PER ADDENDUM No. 1 DATED OCTOBER 31, 2014**

APPROVED FOR EROSION CONTROL PLAN AND PLANTING PLAN ONLY

EROSION CONTROL PLAN AND PLANTING PLAN

SCALE: 1" = 50'

EC-3

STATE OF CALIFORNIA - DEPARTMENT OF TRANSPORTATION

Caltrans® LANDSCAPE ARCHITECTURE

SENIOR LANDSCAPE ARCHITECT: RAY DESSELLE

CALCULATED-DESIGNED BY: MARY ANN JOHNS

CHECKED BY: JOHN STANTON

REVISED BY

DATE REVISED

LAST REVISION 10-31-14

DATE PLOTTED => 31-OCT-2014

TIME PLOTTED => 13:18

Dist	COUNTY	ROUTE	POST MILES TOTAL PROJECT	SHEET No.	TOTAL SHEETS
8	Riv	371	67.7/72.9	133	161

LICENSED LANDSCAPE ARCHITECT

10-13-14

PLANS APPROVAL DATE

LICENSED LANDSCAPE ARCHITECT (Name & License No.) Signature 11/30/15 Renewal Date 10/31/14 Date STATE OF CALIFORNIA

THE STATE OF CALIFORNIA OR ITS OFFICERS OR AGENTS SHALL NOT BE RESPONSIBLE FOR THE ACCURACY OR COMPLETENESS OF SCANNED COPIES OF THIS PLAN SHEET.

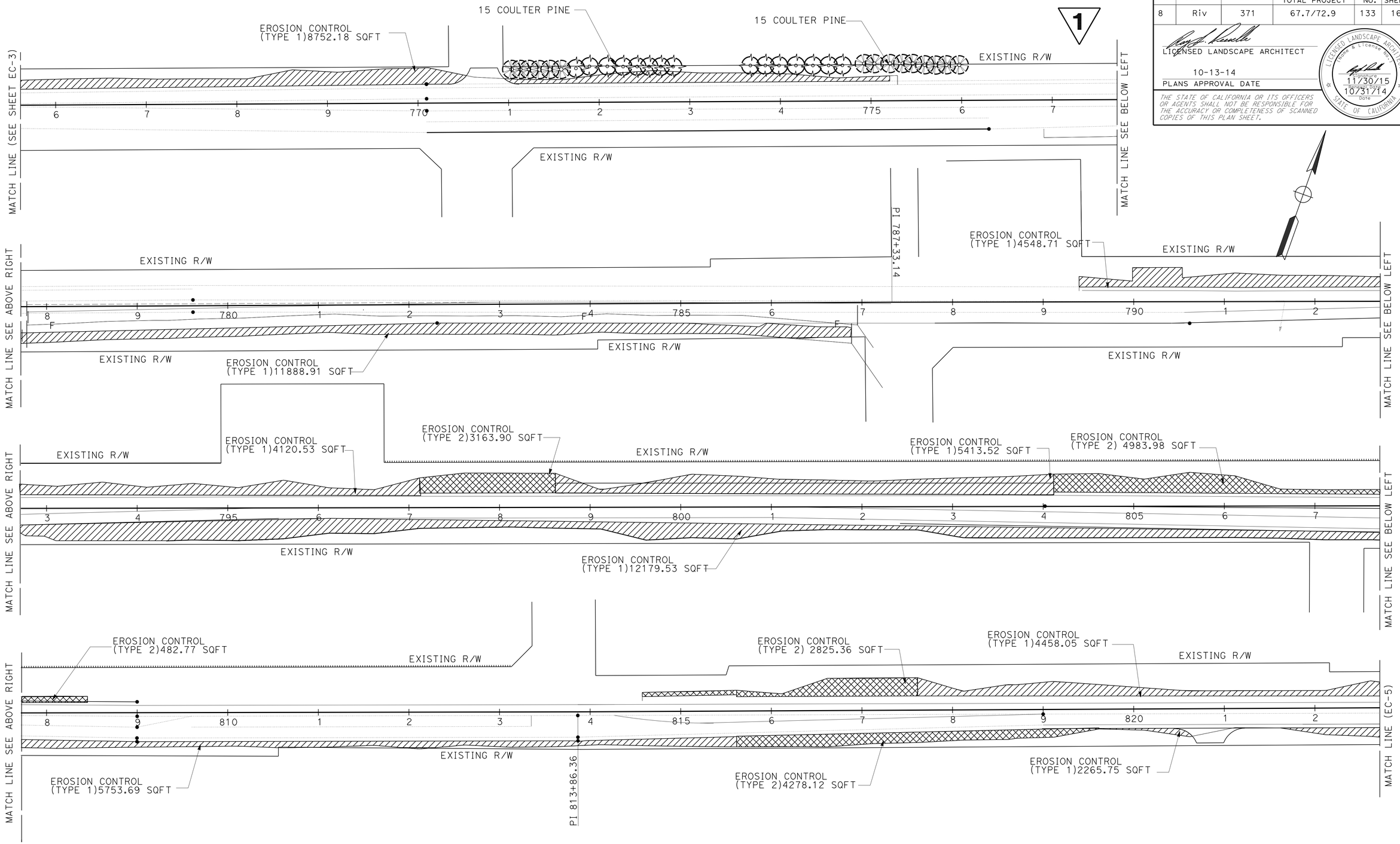

1 **REPLACED PER ADDENDUM No. 1 DATED OCTOBER 31, 2014**

APPROVED FOR EROSION CONTROL PLAN AND PLANTING PLAN ONLY

EROSION CONTROL PLAN AND PLANTING PLAN

SCALE: 1" = 50'

EC-4

STATE OF CALIFORNIA - DEPARTMENT OF TRANSPORTATION

Caltrans® LANDSCAPE ARCHITECTURE

SENIOR LANDSCAPE ARCHITECT: RAY DESSELLE

CALCULATED-DESIGNED BY: MARY ANN JOHNS

CHECKED BY: JOHN STANTON

REVISED BY

DATE REVISED

LAST REVISION 10-31-14

DATE PLOTTED => 31-OCT-2014

TIME PLOTTED => 13:18

Dist	COUNTY	ROUTE	POST MILES TOTAL PROJECT	SHEET No.	TOTAL SHEETS
08	Riv	371	67.7/72.9	134	161

LICENSED LANDSCAPE ARCHITECT

10-13-14

PLANS APPROVAL DATE

LICENSED LANDSCAPE ARCHITECT (Name & License No.) Signature 11/30/15 Renewal Date 10/31/14 Date STATE OF CALIFORNIA

THE STATE OF CALIFORNIA OR ITS OFFICERS OR AGENTS SHALL NOT BE RESPONSIBLE FOR THE ACCURACY OR COMPLETENESS OF SCANNED COPIES OF THIS PLAN SHEET.

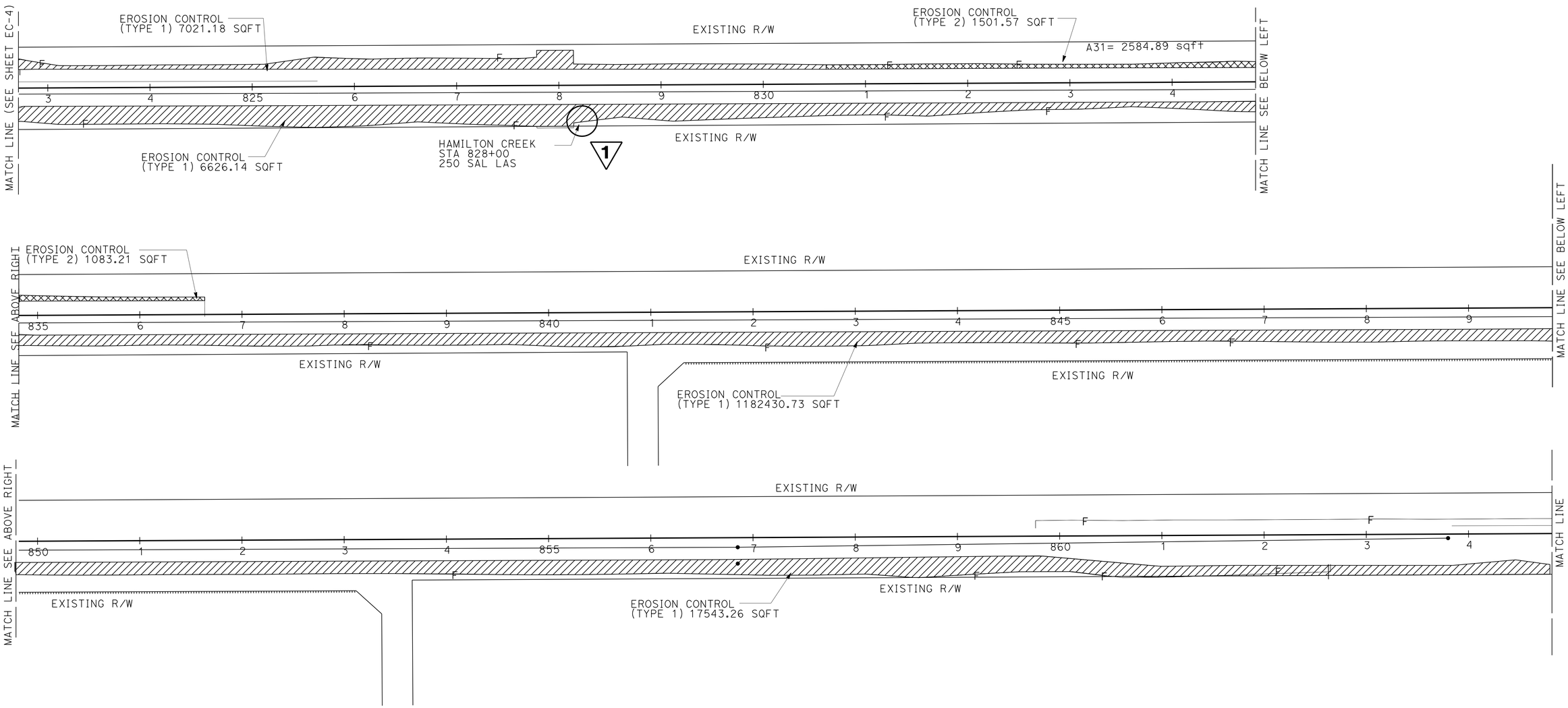

1 **REPLACED PER ADDENDUM No. 1 DATED OCTOBER 31, 2014**

APPROVED FOR EROSION CONTROL PLAN ONLY 1

EROSION CONTROL PLAN

SCALE: 1" = 50'

EC-5

STATE OF CALIFORNIA - DEPARTMENT OF TRANSPORTATION

Caltrans® LANDSCAPE ARCHITECTURE

SENIOR LANDSCAPE ARCHITECT: RAY DESSELLE

CALCULATED-DESIGNED BY: MARY ANN JOHNS

CHECKED BY: JOHN STANTON

REVISED BY

DATE REVISED

LAST REVISION 10-31-14

DATE PLOTTED => 31-OCT-2014

TIME PLOTTED => 13:18

M

Maint	MAINTENANCE
Max	MAXIMUM
MB	METAL BEAM
MBB	METAL BEAM BARRIER
MBGR	METAL BEAM GUARD RAILING
Med	MEDIAN
MGS	MIDWEST GUARDRAIL SYSTEM
MH	MANHOLE
Min	MINIMUM
Misc	MISCELLANEOUS
Misc I & S	MISCELLANEOUS IRON AND STEEL
Mkr	MARKER
Mod	MODIFIED,
	MODIFY
Mon	MONUMENT
MP	METAL PLATE
MPGR	METAL PLATE GUARD RAILING
MR	MOVEMENT RATING
MSE	MECHANICALLY STABILIZED EMBANKMENT
Mt	MOUNTAIN, MOUNT
Mtl	MATERIAL
MVP	MAINTENANCE VEHICLE PULLOUT

N

N	NORTH
NB	NORTHBOUND
No.	NUMBER (MUST HAVE PERIOD)
Nos.	NUMBERS (MUST HAVE PERIOD)
NPS	NOMINAL PIPE SIZE
NS	NEAR SIDE
NSP	NEW STANDARD PLAN
NTS	NOT TO SCALE

O

Oblr	OBLITERATE
OC	OVERCROSSING
OD	OUTSIDE DIAMETER
OF	OUTSIDE FACE
OG	ORIGINAL GROUND
OGAC	OPEN GRADED ASPHALT CONCRETE
OGFC	OPEN GRADED FRICTION COURSE
OH	OVERHEAD
OHWM	ORDINARY HIGH WATER MARK
O-O	OUT TO OUT
Opp	OPPOSITE
OSD	OVERSIDE DRAIN

P

P	PAGE
PAP	PERFORATED ALUMINUM PIPE
PB	PULL BOX
PC	POINT OF CURVATURE,
	PRECAST
PCC	POINT OF COMPOUND CURVE,
	PORTLAND CEMENT CONCRETE
PCMS	PORTABLE CHANGEABLE MESSAGE SIGN
PCP	PERFORATED CONCRETE PIPE,
	PRESTRESSED CONCRETE PIPE
PCVC	POINT OF COMPOUND VERTICAL CURVE
PEC	PERMIT TO ENTER AND CONSTRUCT
Ped	PEDESTRIAN
Ped OC	PEDESTRIAN OVERCROSSING
Ped UC	PEDESTRIAN UNDERCROSSING
Perm Mtl	PERMEABLE MATERIAL

P continued

PG	PROFILE GRADE
PI	POINT OF INTERSECTION
PJP	PARTIAL JOINT PENETRATION
Pkwy	PARKWAY
ℙ,PL	PLATE
P/L	PROPERTY LINE
PM	POST MILE,
	TIME FROM NOON TO MIDNIGHT
PN	PAVING NOTCH
POC	POINT OF HORIZONTAL CURVE
POT	POINT OF TANGENT
POVC	POINT OF VERTICAL CURVE
PP	PIPE PILE,
	PLASTIC PIPE,
	POWER POLE
PPL	PREFORMED PERMEABLE LINER
PPP	PERFORATED PLASTIC PIPE
PRC	POINT OF REVERSE CURVE
PRF	PAVEMENT REINFORCING FABRIC
PRVC	POINT OF REVERSE VERTICAL CURVE
PS&E	PLANS, SPECIFICATIONS AND ESTIMATES
PS, P/S	PRESTRESSED
PSP	PERFORATED STEEL PIPE
PT	POINT OF TANGENCY
PVC	POLYVINYL CHLORIDE
Pvmt	PAVEMENT

Q

Qty	QUANTITY

R

R	RADIUS
R & D	REMOVE AND DISPOSE
R & S	REMOVE AND SALVAGE
R/C	RATE OF CHANGE
RCA	REINFORCED CONCRETE ARCH
RCB	REINFORCED CONCRETE BOX
RCP	REINFORCED CONCRETE PIPE
RCPA	REINFORCED CONCRETE PIPE ARCH
Rd	ROAD
Reinf	REINFORCED,
	REINFORCEMENT,
	REINFORCING
Rel	RELOCATE
Repl	REPLACEMENT
Ret	RETAINING
Rev	REVISED, REVISION
Rdwy	ROADWAY
RHMA	RUBBERIZED HOT MIX ASPHALT
Riv	RIVER
RM	ROAD-MIXED
RP	RADIUS POINT,
	REFERENCE POINT
RR	RAILROAD
RSP	ROCK SLOPE PROTECTION,
	REVISED STANDARD PLAN
Rt	RIGHT
Rte	ROUTE
RW	REDWOOD,
	RETAINING WALL
R/W	RIGHT OF WAY
Rwy	RAILWAY

S

S	SOUTH,
	SUPPLEMENT
SAE	STRUCTURE APPROACH EMBANKMENT
Salv	SALVAGE
SAPP	STRUCTURAL ALUMINUM PLATE PIPE
SB	SOUTHBOUND
SC	SAND CUSHION
SCSP	SLOTTED CORRUGATED STEEL PIPE
SD	STORM DRAIN
Sec	SECOND,
	SECTION
Sep	SEPARATION
SG	SUBGRADE
Shld	SHOULDER
Sht	SHEET
Sim	SIMILAR
℄	STATION LINE
SM	SELECTED MATERIAL
Spec	SPECIAL,
	SPECIFICATIONS
SPP	SLOTTED PLASTIC PIPE
SS	SLOPE STAKE
SSBM	STRAP AND SADDLE BRACKET METHOD
SSD	STRUCTURAL SECTION DRAIN
SSPA	STRUCTURAL STEEL PLATE ARCH
SSPP	STRUCTURAL STEEL PLATE PIPE
SSPPA	STRUCTURAL STEEL PLATE PIPE ARCH
SSRP	STEEL SPIRAL RIB PIPE
St	STREET
Sta	STATION
STBB	SINGLE THRIE BEAM BARRIER
Std	STANDARD
Str	STRUCTURE
Surf	SURFACING
SW	SIDEWALK,
	SOUND WALL
Swr	SEWER
Sym	SYMMETRICAL
S4S	SURFACE 4 SIDES

T

T	SEMI-TANGENT
Tan	TANGENT
TBB	THRIE BEAM BARRIER
Tbr	TIMBER
TC	TOP OF CURB
TCB	TRAFFIC CONTROL BOX
TCE	TEMPORARY CONSTRUCTION EASEMENT
Tel	TELEPHONE
Temp	TEMPORARY
TG	TOP OF GRADE
Tot	TOTAL
TP	TELEPHONE POLE
TPB	TREATED PERMEABLE BASE
TPM	TREATED PERMEABLE MATERIAL
Trans	TRANSITION

T continued

TS	TRANSVERSE,
	TRAFFIC SIGNAL,
	TUBULAR STEEL
Typ	TYPICAL

U

UC	UNDERCROSSING
UD	UNDERDRAIN
UG	UNDERGROUND
UON	UNLESS OTHERWISE NOTED
UP	UNDERPASS

V

V	VALVE,
	DESIGN SPEED
Var	VARIABLE,
	VARIES
VC	VERTICAL CURVE
VCP	VITRIFIED CLAY PIPE
Vert	VERTICAL
Via	VIADUCT
Vol	VOLUME

W

W	WEST,
	WIDTH
WB	WESTBOUND
WH	WEEP HOLE
WM	WIRE MESH
WS	WATER SURFACE
WSP	WELDED STEEL PIPE
Wt	WEIGHT
WV	WATER VALVE
WW	WINGWALL
WWLOL	WINGWALL LAYOUT LINE

X

X Sec	CROSS SECTION
Xing	CROSSING

Y

Yr	YEAR
Yrs	YEARS

1 ADDED PER ADDENDUM No. 1 DATED OCTOBER 31, 2014

Dist	COUNTY	ROUTE	POST MILES TOTAL PROJECT	SHEET No.	TOTAL SHEETS
08	Riv	371	67.7/72.9	134A	161

1

Grace M. Tsushima
REGISTERED CIVIL ENGINEER

July 19, 2013
PLANS APPROVAL DATE

REGISTERED PROFESSIONAL ENGINEER
Grace M. Tsushima
No. C49814
Exp. 9-30-14
CIVIL
STATE OF CALIFORNIA

THE STATE OF CALIFORNIA OR ITS OFFICERS OR AGENTS SHALL NOT BE RESPONSIBLE FOR THE ACCURACY OR COMPLETENESS OF SCANNED COPIES OF THIS PLAN SHEET.

TO ACCOMPANY PLANS DATED 10-13-14

UNIT OF MEASUREMENT SYMBOLS:

Some of the symbols used in the project plan quantity tables and in the Bid Item List are:

TABLE A

SYMBOL USED	DEFINITIONS
ACRE	ACRE
CF	CUBIC FOOT
CY	CUBIC YARD
EA	EACH
GAL	GALLON
LB	POUND
LF	LINEAR FOOT
SQFT	SQUARE FOOT
SQYD	SQUARE YARD
STA	100 FEET
TAB	TABLET
TON	2,000 POUNDS

Some of the symbols used in the plans other than in the project plan quantity tables are:

TABLE B

SYMBOL USED	DEFINITIONS
ksi	KIPS PER SQUARE INCH
ksf	KIPS PER SQUARE FOOT
psi	POUNDS PER SQUARE INCH
psf	POUNDS PER SQUARE FOOT
lb/ft^3, pcf	POUNDS PER CUBIC FOOT
tsf	TONS PER SQUARE FOOT
mph, MPH *	MILES PER HOUR
ø	NOMINAL DIAMETER
oz	OUNCE
lb	POUND
kip	1,000 POUNDS
cal	CALORIE
ft	FOOT OR FEET
gal	GALLON

* For use on a sign panel only

STATE OF CALIFORNIA
DEPARTMENT OF TRANSPORTATION

ABBREVIATIONS (SHEET 2 OF 2)

NO SCALE

RSP A10B DATED JULY 19, 2013 SUPERSEDES STANDARD PLAN A10B DATED MAY 20, 2011 - PAGE 2 OF THE STANDARD PLANS BOOK DATED 2010.

REVISED STANDARD PLAN RSP A10B

2010 REVISED STANDARD PLAN RSP A10B

6-7-13

Dist	COUNTY	ROUTE	POST MILES TOTAL PROJECT	SHEET No.	TOTAL SHEETS
08	Riv	371	67.7/72.9	134B	161

1

Roberta L. McLaughlin
REGISTERED CIVIL ENGINEER

July 19, 2013
PLANS APPROVAL DATE

REGISTERED PROFESSIONAL ENGINEER
Roberta L. McLaughlin
No. C40375
Exp. 3-31-15
CIVIL
STATE OF CALIFORNIA

THE STATE OF CALIFORNIA OR ITS OFFICERS OR AGENTS SHALL NOT BE RESPONSIBLE FOR THE ACCURACY OR COMPLETENESS OF SCANNED COPIES OF THIS PLAN SHEET.

TO ACCOMPANY PLANS DATED 10-13-14

EXIT RAMP NEUTRAL AREA (GORE) TREATMENT

DETAIL 36

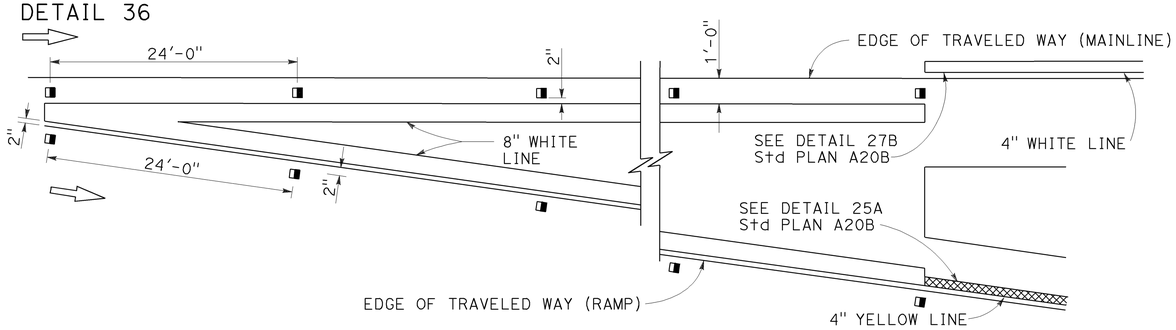

ENTRANCE RAMP NEUTRAL AREA (MERGE) TREATMENT

DETAIL 36A

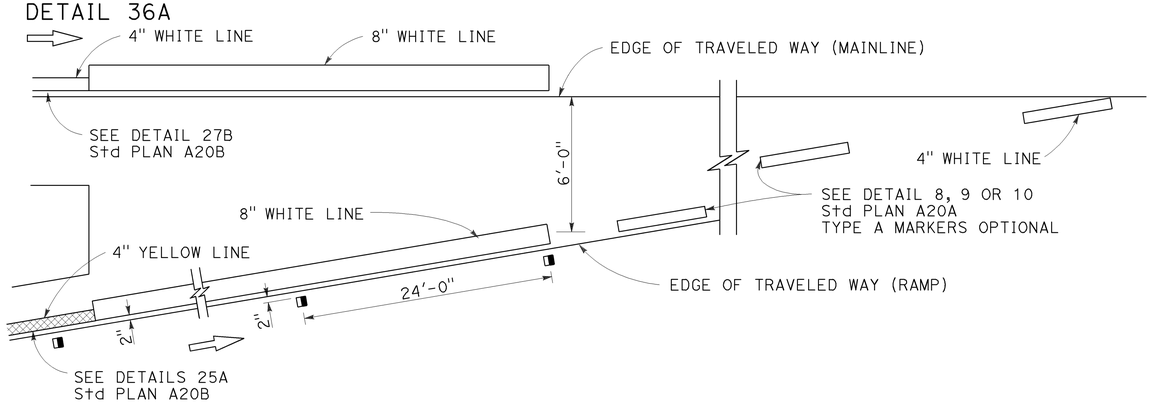

ENTRANCE RAMP NEUTRAL AREA (ACCELERATION LANE) TREATMENT

DETAIL 36B

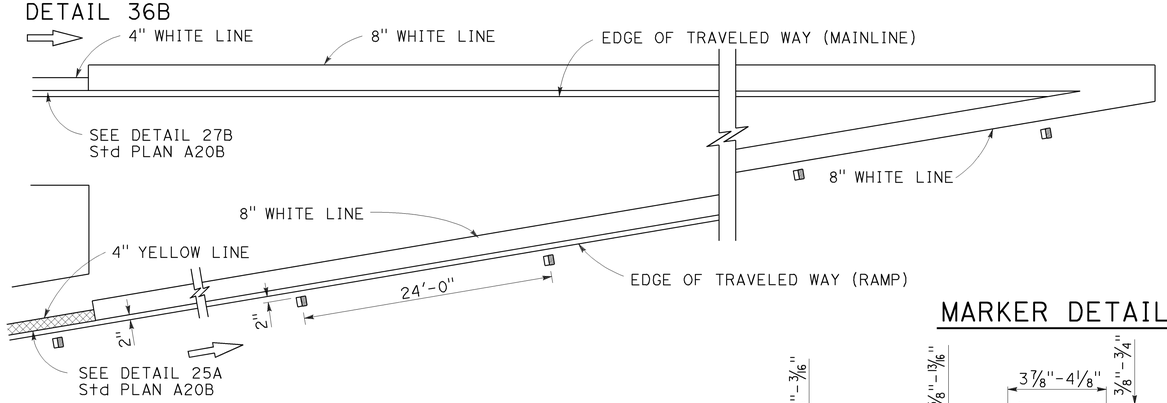

MARKER DETAILS

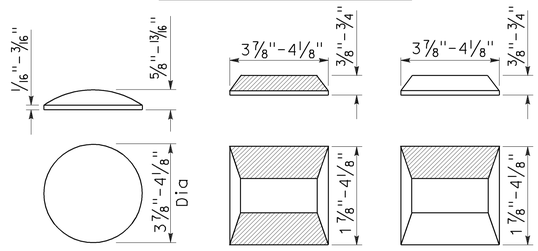

TYPE A TYPE C TYPE G

RETROREFLECTIVE FACE

LEGEND:

MARKERS

- TYPE A WHITE NON-REFLECTIVE
- TYPE C RED-CLEAR RETROREFLECTIVE
- TYPE G ONE-WAY CLEAR RETROREFLECTIVE

LANE DROP AT EXIT RAMPS

DETAIL 37

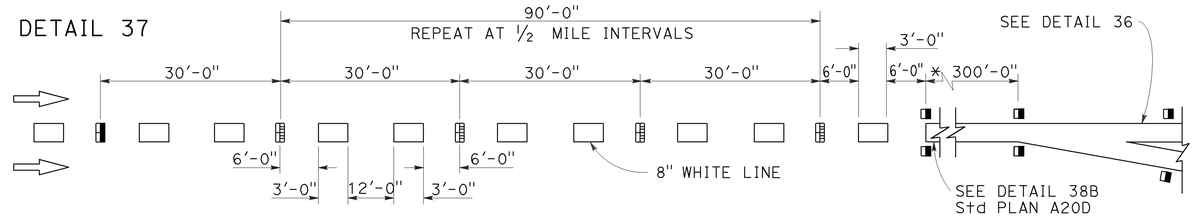

DETAIL 37A

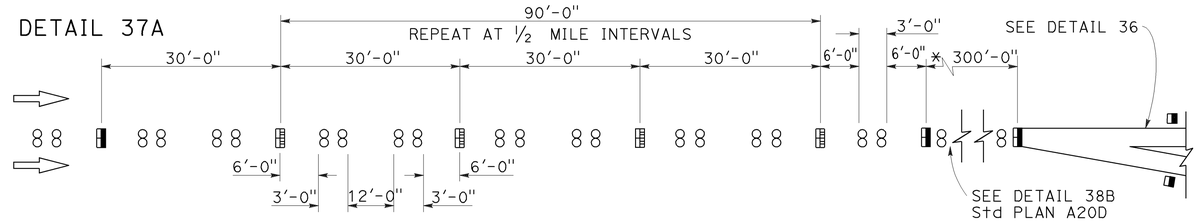

* The solid channelizing line shown may be omitted on short auxiliary lanes where weaving length is critical.

LANE DROP AT INTERSECTIONS

DETAIL 37B

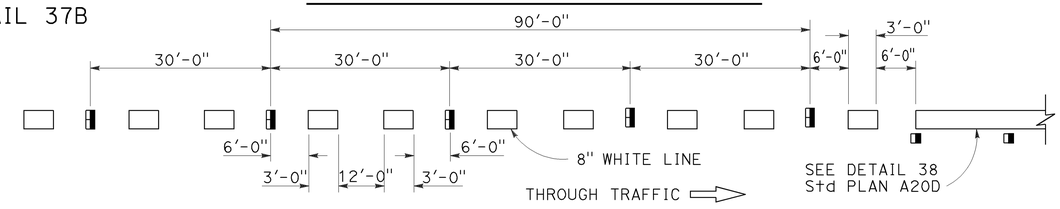

DETAIL 37C

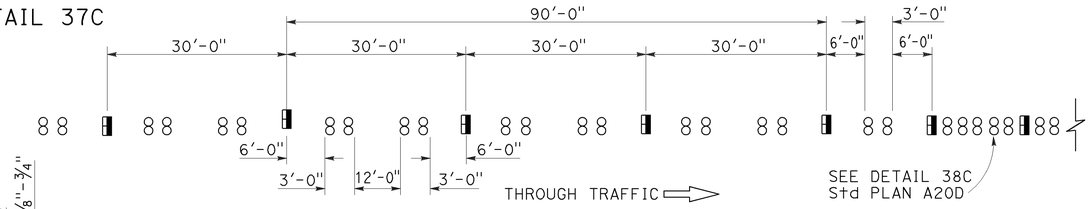

STATE OF CALIFORNIA
DEPARTMENT OF TRANSPORTATION

PAVEMENT MARKERS AND TRAFFIC LINE TYPICAL DETAILS

NO SCALE

RSP A20C DATED JULY 19, 2013 SUPERSEDES STANDARD PLAN A20C DATED MAY 20, 2011 - PAGE 11 OF THE STANDARD PLANS BOOK DATED 2010.

2010 REVISED STANDARD PLAN RSP A20C

1 **ADDED PER ADDENDUM No. 1 DATED OCTOBER 31, 2014**

REVISED STANDARD PLAN RSP A20C

4-29-13

Dist	COUNTY	ROUTE	POST MILES TOTAL PROJECT	SHEET No.	TOTAL SHEETS
08	Riv	371	67.7/72.9	134C	161

1

REGISTERED CIVIL ENGINEER

April 20, 2012
PLANS APPROVAL DATE

REGISTERED PROFESSIONAL ENGINEER
Roberta L. McLaughlin
No. C40375
Exp. 3-31-13
CIVIL
STATE OF CALIFORNIA

THE STATE OF CALIFORNIA OR ITS OFFICERS OR AGENTS SHALL NOT BE RESPONSIBLE FOR THE ACCURACY OR COMPLETENESS OF SCANNED COPIES OF THIS PLAN SHEET.

TO ACCOMPANY PLANS DATED 10-13-14

2010 REVISED STANDARD PLAN RSP A24A

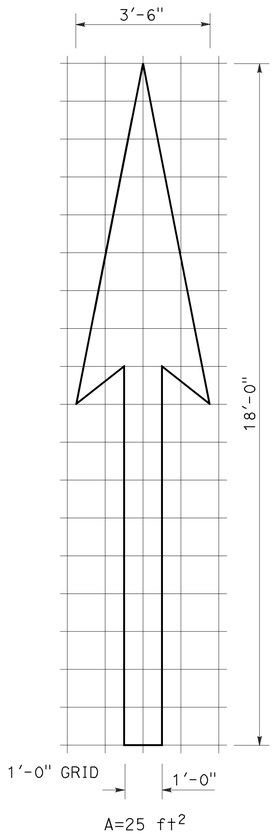

A=25 ft²

TYPE I 18'-0" ARROW

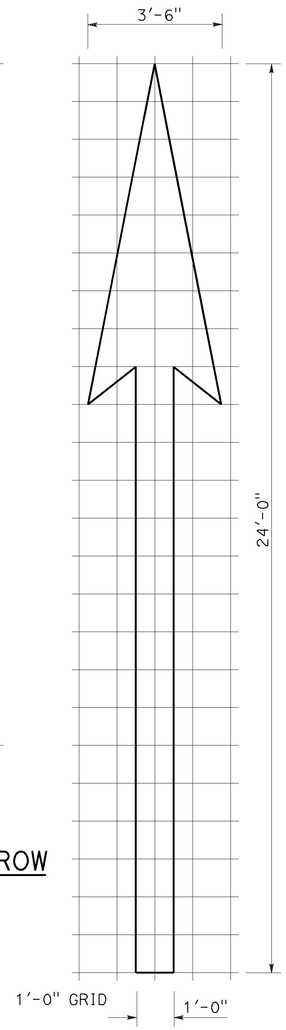

A=31 ft²

TYPE I 24'-0" ARROW

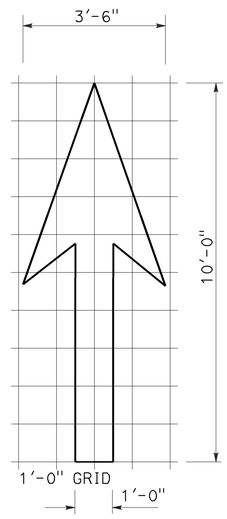

A=14 ft²

TYPE I 10'-0" ARROW

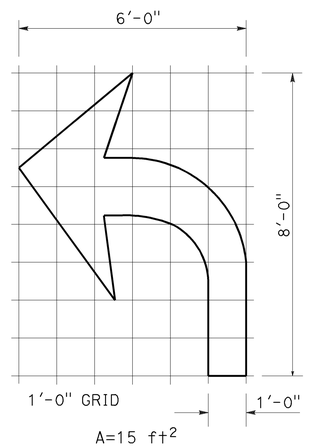

A=15 ft²

TYPE IV (L) ARROW

(For Type IV (R) arrow, use mirror image)

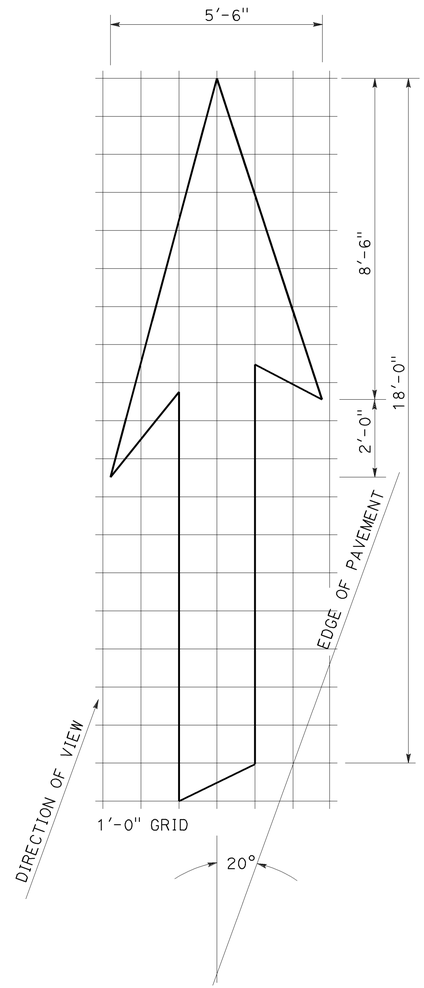

A=42 ft²

TYPE VI ARROW

Right lane drop arrow
(For left lane, use mirror image)

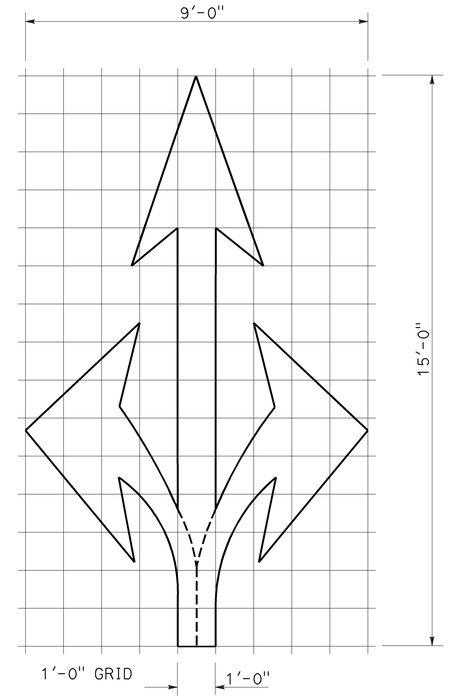

A=36 ft²

TYPE VIII ARROW

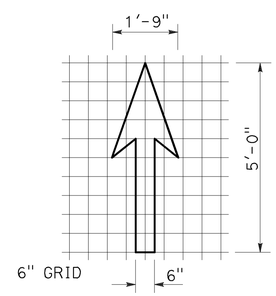

A=3.5 ft²

BIKE LANE ARROW

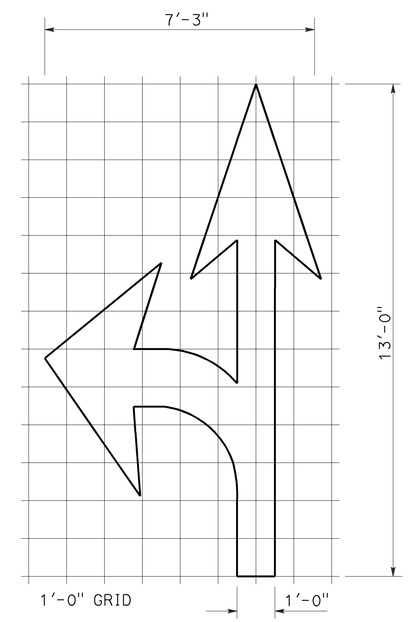

A=27 ft²

TYPE VII (L) ARROW

(For Type VII (R) arrow, use mirror image)

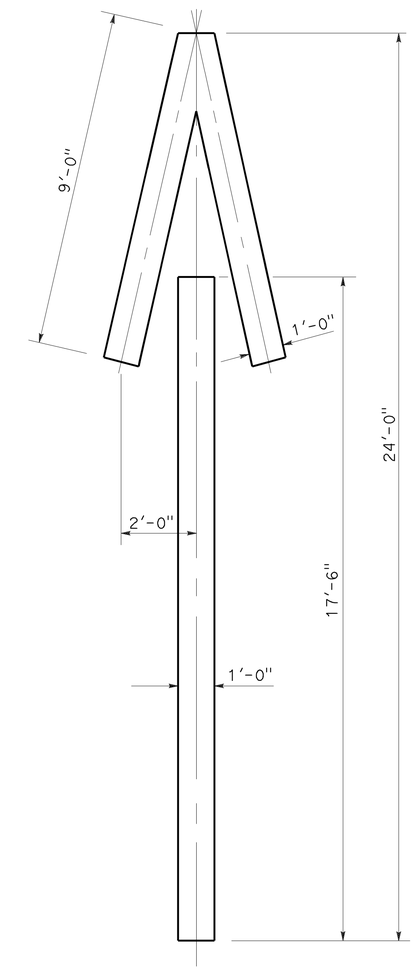

A=33 ft²

TYPE V ARROW

NOTE:
Minor variations in dimensions may be accepted by the Engineer.

STATE OF CALIFORNIA
DEPARTMENT OF TRANSPORTATION

PAVEMENT MARKINGS ARROWS

NO SCALE

RSP A24A DATED APRIL 20, 2012 SUPERSEDES STANDARD PLAN A24A DATED MAY 20, 2011 - PAGE 13 OF THE STANDARD PLANS BOOK DATED 2010.

1 **ADDED PER ADDENDUM No. 1 DATED OCTOBER 31, 2014**

REVISED STANDARD PLAN RSP A24A

3-14-12

Dist	COUNTY	ROUTE	POST MILES TOTAL PROJECT	SHEET No.	TOTAL SHEETS
08	Riv	371	67.7/72.9	134D	161

1

REGISTERED CIVIL ENGINEER

October 19, 2012
PLANS APPROVAL DATE

REGISTERED PROFESSIONAL ENGINEER
Roberta L. McLaughlin
No. C40375
Exp. 3-31-13
CIVIL
STATE OF CALIFORNIA

THE STATE OF CALIFORNIA OR ITS OFFICERS OR AGENTS SHALL NOT BE RESPONSIBLE FOR THE ACCURACY OR COMPLETENESS OF SCANNED COPIES OF THIS PLAN SHEET.

NOTE: TO ACCOMPANY PLANS DATED 10-13-14

Minor variations in dimensions may be accepted by the Engineer.

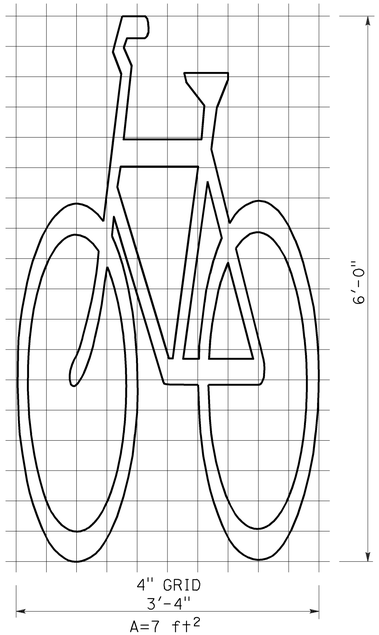

BIKE LANE SYMBOL WITHOUT PERSON

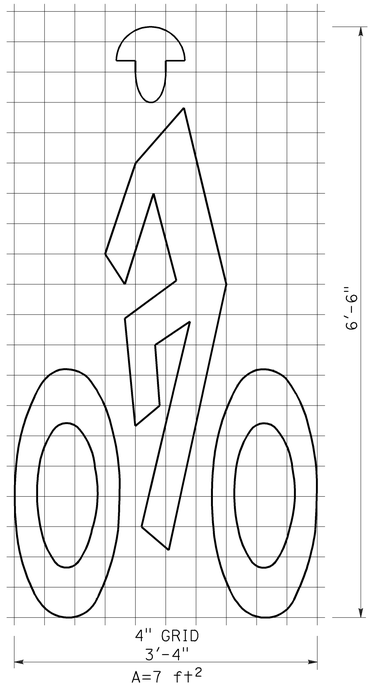

BIKE LANE SYMBOL WITH PERSON

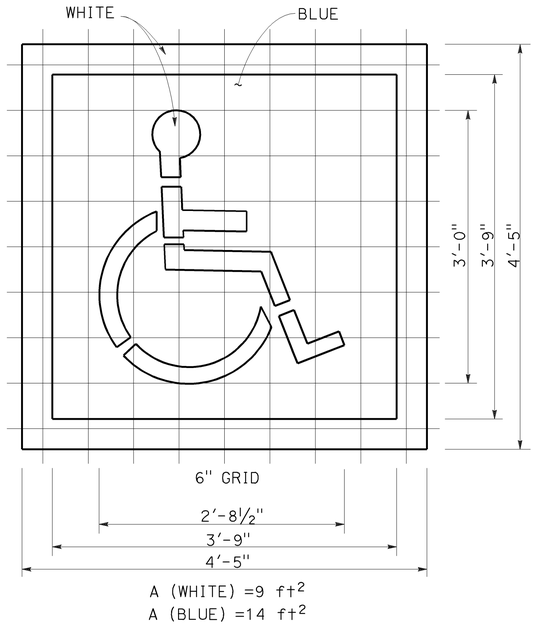

INTERNATIONAL SYMBOL OF ACCESSIBILITY (ISA) MARKING

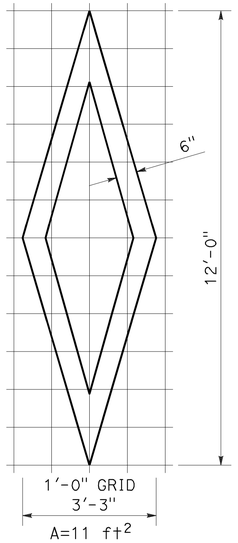

DIAMOND SYMBOL

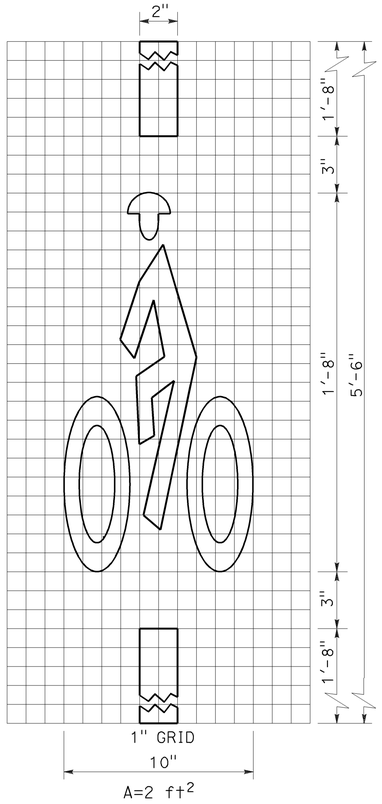

BICYCLE LOOP DETECTOR SYMBOL

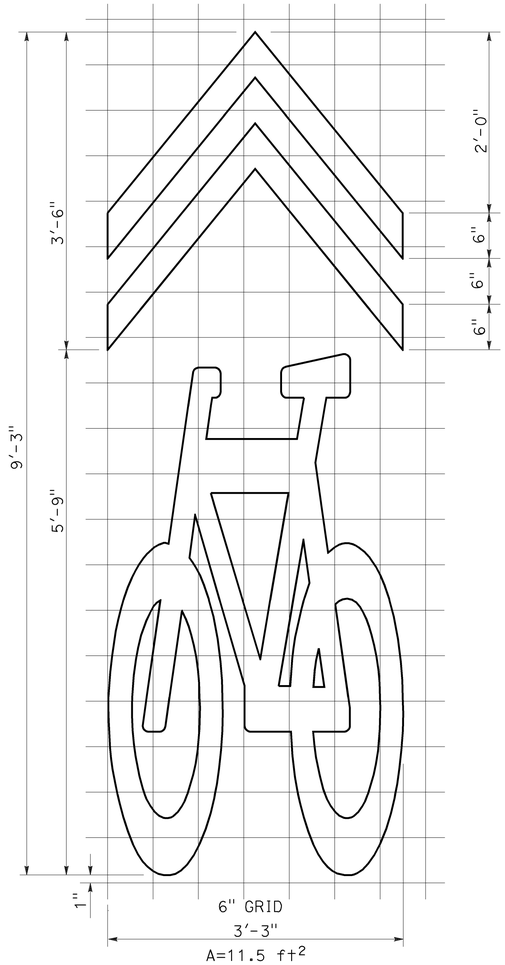

SHARED ROADWAY BICYCLE MARKING

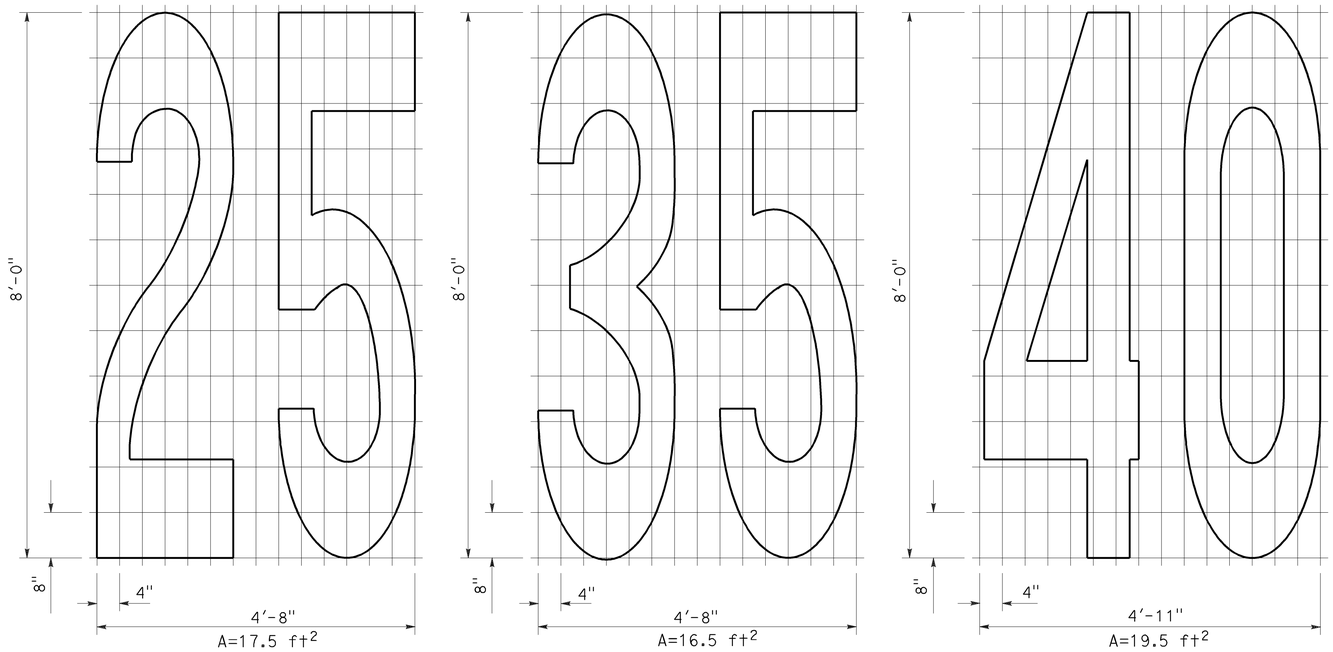

NUMERALS

STATE OF CALIFORNIA
DEPARTMENT OF TRANSPORTATION

PAVEMENT MARKINGS SYMBOLS AND NUMERALS

NO SCALE

RSP A24C DATED OCTOBER 19, 2012 SUPERSEDES STANDARD PLAN A24C DATED MAY 20, 2011 - PAGE 15 OF THE STANDARD PLANS BOOK DATED 2010.

1 **ADDED PER ADDENDUM No. 1 DATED OCTOBER 31, 2014**

REVISED STANDARD PLAN RSP A24C

2010 REVISED STANDARD PLAN RSP A24C

6-28-12

Dist	COUNTY	ROUTE	POST MILES TOTAL PROJECT	SHEET No.	TOTAL SHEETS
08	Riv	371	67.7/72.9	134E	161

1

REGISTERED CIVIL ENGINEER

July 20, 2012
PLANS APPROVAL DATE

REGISTERED PROFESSIONAL ENGINEER
Roberta L. McLaughlin
No. C40375
Exp. 3-31-13
CIVIL
STATE OF CALIFORNIA

THE STATE OF CALIFORNIA OR ITS OFFICERS OR AGENTS SHALL NOT BE RESPONSIBLE FOR THE ACCURACY OR COMPLETENESS OF SCANNED COPIES OF THIS PLAN SHEET.

TO ACCOMPANY PLANS DATED 10-13-14

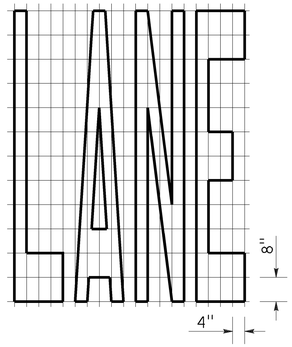

A=24 ft²

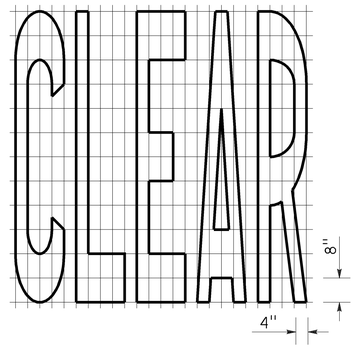

A=27 ft²

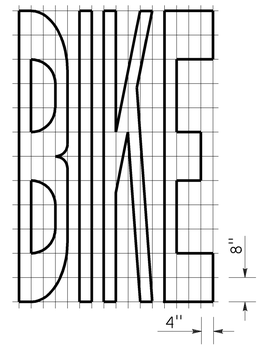

A=21 ft²

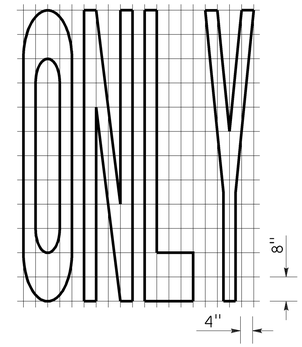

A=22 ft²

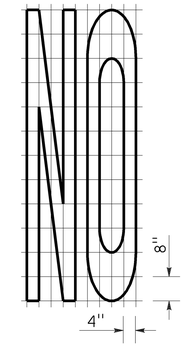

A=14 ft²

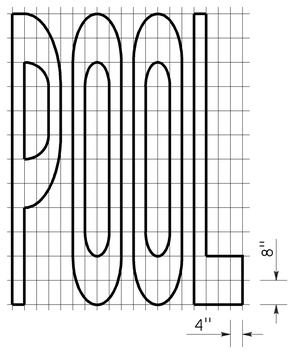

A=23 ft²

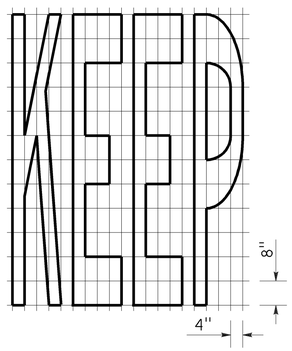

A=24 ft²

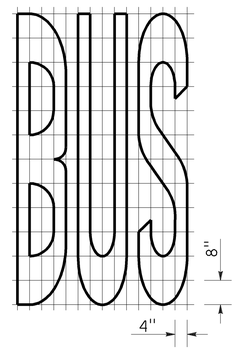

A=20 ft²

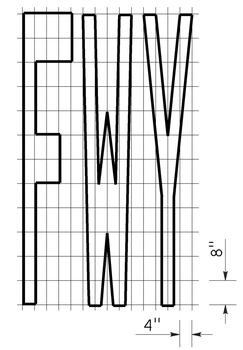

A=16 ft²

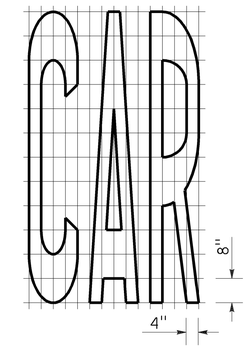

A=17 ft²

WORD MARKINGS			
ITEM	ft²	ITEM	ft²
LANE	24	NO	14
POOL	23	BIKE	21
CAR	17	BUS	20
CLEAR	27	ONLY	22
KEEP	24	FWY	16

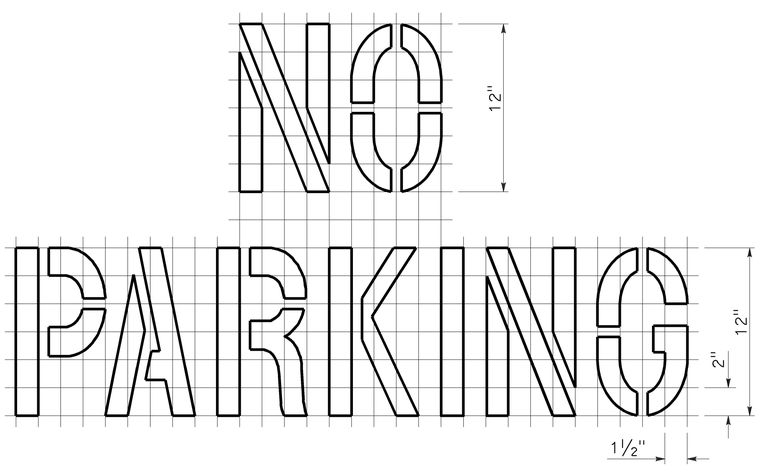

A=2 ft²
See Notes 6 and 7

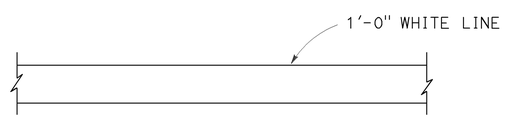

LIMIT LINE (STOP LINE)

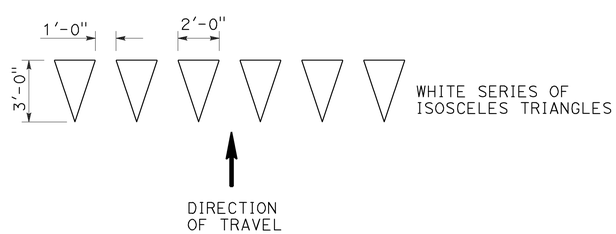

YIELD LINE

NOTES:

1. If a message consists of more than one word, it should read "UP", i.e., the first word should be nearest the driver.
2. The space between words should be at least four times the height of the characters for low speed roads, but not more than ten times the height of the characters. The space may be reduced appropriately where there is limited space because of local conditions.
3. Minor variations in dimensions may be accepted by the Engineer.
4. Portions of a letter, number or symbol may be separated by connecting segments not to exceed 2" in width.
5. The words "NO PARKING" pavement marking is to be used for parking facilities. For typical locations of markings, see Standard Plans A90A and A90B.
6. The words "NO PARKING", shall be painted in white letters no less than 1'-0" high on a contrasting background and located so that it is visible to traffic enforcement officials.

STATE OF CALIFORNIA
DEPARTMENT OF TRANSPORTATION

PAVEMENT MARKINGS WORDS, LIMIT AND YIELD LINES

NO SCALE

RSP A24E DATED JULY 20, 2012 SUPERSEDES STANDARD PLAN A24E
DATED MAY 20, 2011 - PAGE 17 OF THE STANDARD PLANS BOOK DATED 2010.

1 ADDED PER ADDENDUM No. 1 DATED OCTOBER 31, 2014

REVISED STANDARD PLAN RSP A24E

2010 REVISED STANDARD PLAN RSP A24E

6-12-12

Dist	COUNTY	ROUTE	POST MILES TOTAL PROJECT	SHEET No.	TOTAL SHEETS
08	Riv	371	67.7/72.9	134F	161

1

Roberta L. McLaughlin
REGISTERED CIVIL ENGINEER

July 20, 2012
PLANS APPROVAL DATE

REGISTERED PROFESSIONAL ENGINEER
Roberta L. McLaughlin
No. C40375
Exp. 3-31-13
CIVIL
STATE OF CALIFORNIA

THE STATE OF CALIFORNIA OR ITS OFFICERS OR AGENTS SHALL NOT BE RESPONSIBLE FOR THE ACCURACY OR COMPLETENESS OF SCANNED COPIES OF THIS PLAN SHEET.

TO ACCOMPANY PLANS DATED 10-13-14

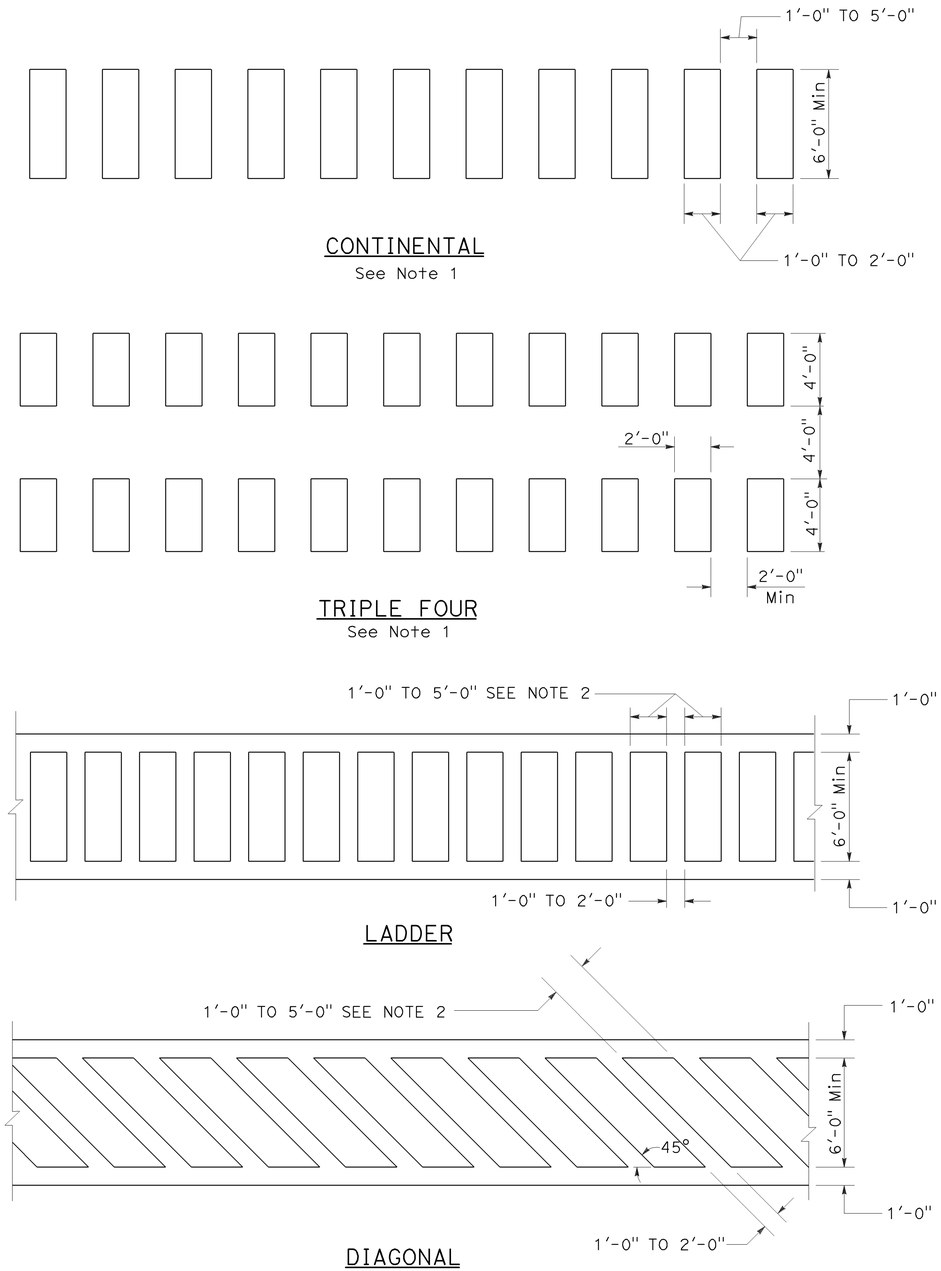

HIGHER VISIBILITY CROSSWALKS

NOTES:

1. Spaces between markings should be placed in wheel tracks of each lane.
2. Spacings not to exceed 2.5 times width of longitudinal line.
3. All crosswalk markings must be white except for those near schools must be yellow.

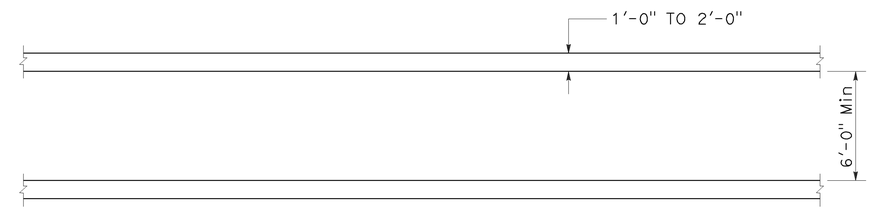

BASIC

STATE OF CALIFORNIA
DEPARTMENT OF TRANSPORTATION

PAVEMENT MARKINGS CROSSWALKS

NO SCALE

RSP A24F DATED JULY 20, 2012 SUPPLEMENTS THE STANDARD PLANS BOOK DATED 2010.

1 **ADDED PER ADDENDUM No. 1 DATED OCTOBER 31, 2014**

REVISED STANDARD PLAN RSP A24F

2010 REVISED STANDARD PLAN RSP A24F

6-28-12

Dist	COUNTY	ROUTE	POST MILES TOTAL PROJECT	SHEET No.	TOTAL SHEETS
08	Riv	371	67.7/72.9	154A	161

REGISTERED CIVIL ENGINEER

October 21, 2011

PLANS APPROVAL DATE

REGISTERED PROFESSIONAL ENGINEER Tillat Satter No. C42892 Exp. 3-31-12 CIVIL STATE OF CALIFORNIA

THE STATE OF CALIFORNIA OR ITS OFFICERS OR AGENTS SHALL NOT BE RESPONSIBLE FOR THE ACCURACY OR COMPLETENESS OF SCANNED COPIES OF THIS PLAN SHEET.

TO ACCOMPANY PLANS DATED 10-13-14

1

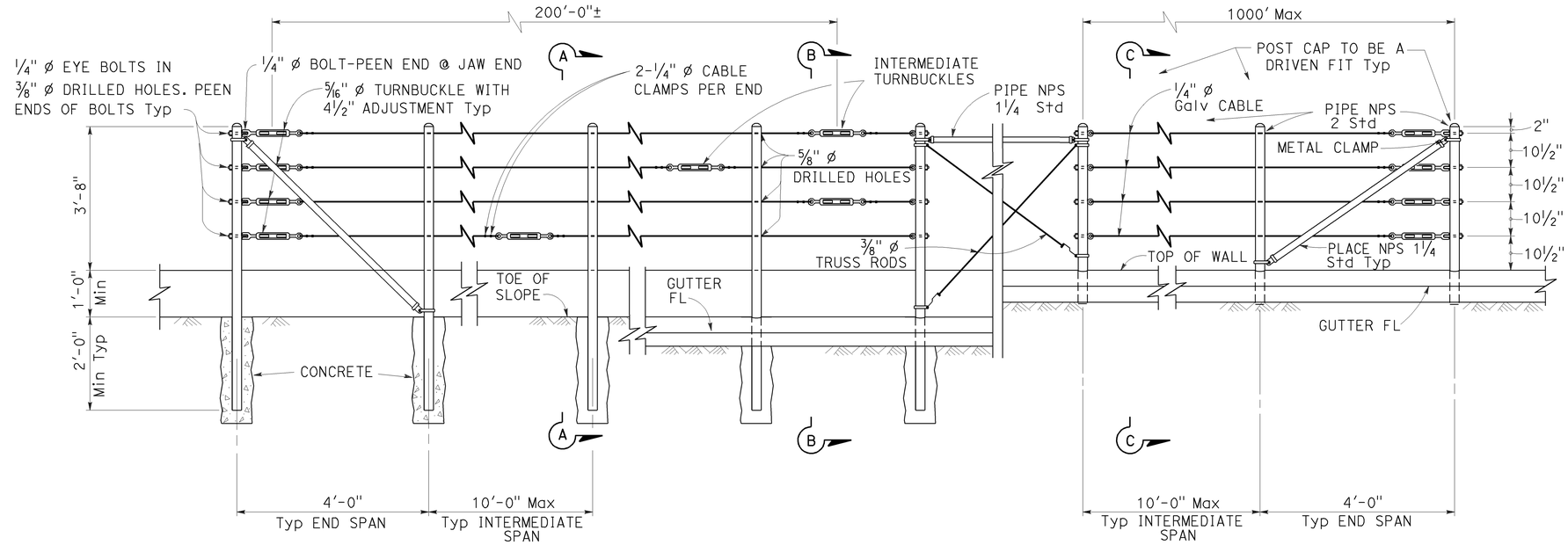

EXISTING WALL (WITHOUT GUTTER)
Existing

RETAINING WALL (WITH GUTTER)
Existing

RETAINING WALL (WITH GUTTER)
New construction

ELEVATION

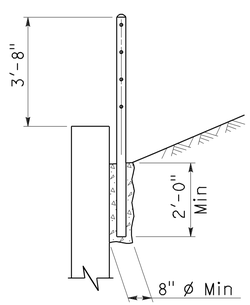

SECTION A-A
Existing

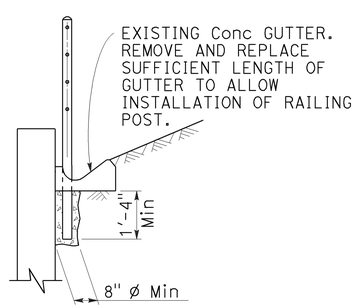

SECTION B-B
Existing

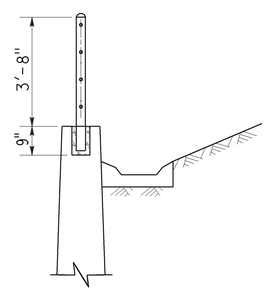

SECTION C-C
New construction

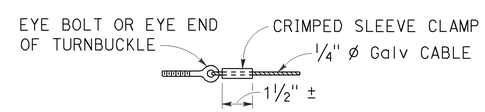

ALTERNATIVE CABLE CONNECTION

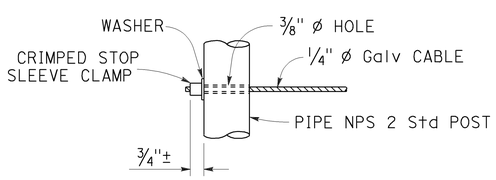

ALTERNATIVE DEAD END ANCHORAGE

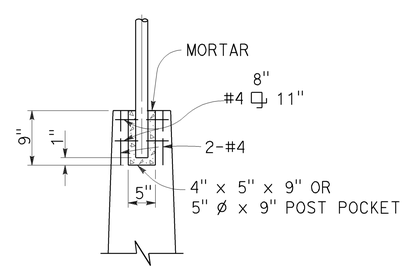

POST POCKET

NOTES:

1. Maximum distance between turnbuckles shall be 200'-0"±.
2. Intermediate turnbuckles to be placed in adjacent spans.
3. Cable shall not be spliced between intermediate turnbuckles and end posts.
4. Posts to be vertical.
5. Alignment of holes in posts may vary to conform to slope of top of retaining wall.
6. The Contractor shall verify all dependent dimensions in the field before ordering or fabricating any material.
7. Line posts shall be braced horizontally and trussed diagonally in both directions at intervals not to exceed 1000'.
8. Post pockets to be centered in top of wall.
9. Typical end spans, braced in both directions, shall be constructed at changes in line where the angle of deflection is 15° or more.
10. Provide thimbles at all cable loops.

STATE OF CALIFORNIA
DEPARTMENT OF TRANSPORTATION

CABLE RAILING

NO SCALE

RSP B11-47 DATED OCTOBER 21, 2011 SUPERSEDES STANDARD PLAN B11-47 DATED MAY 20, 2011 - PAGE 293 OF THE STANDARD PLANS BOOK DATED 2010.

1 **ADDED PER ADDENDUM No. 1 DATED OCTOBER 31, 2014**

REVISED STANDARD PLAN RSP B11-47

2010 REVISED STANDARD PLAN RSP B11-47

9-14-11

Dist	COUNTY	ROUTE	POST MILES TOTAL PROJECT	SHEET No.	TOTAL SHEETS
08	Riv	371	67.7/72.9	161A	161

1

Devinder Singh
REGISTERED CIVIL ENGINEER

October 17, 2014
PLANS APPROVAL DATE

REGISTERED PROFESSIONAL ENGINEER
Devinder Singh
No. C50470
Exp. 6-30-15
CIVIL
STATE OF CALIFORNIA

THE STATE OF CALIFORNIA OR ITS OFFICERS OR AGENTS SHALL NOT BE RESPONSIBLE FOR THE ACCURACY OR COMPLETENESS OF SCANNED COPIES OF THIS PLAN SHEET.

TO ACCOMPANY PLANS DATED 10-13-14

NOTES:

See Revised Standard Plan RSP T9 for tables.

Use cone spacing X for taper segment, Y for tangent segment or Z for conflict situations, as approriate, per Table 1, unless X, Y, or Z cone spacing is shown on this sheet.

Unless otherwise specified in the special provisions, all temporary warning signs shall have black legend on fluorescent orange background.

California codes are designated by (CA). Otherwise, Federal (MUTCD) codes are shown.

TYPICAL LANE CLOSURE WITH REVERSIBLE CONTROL

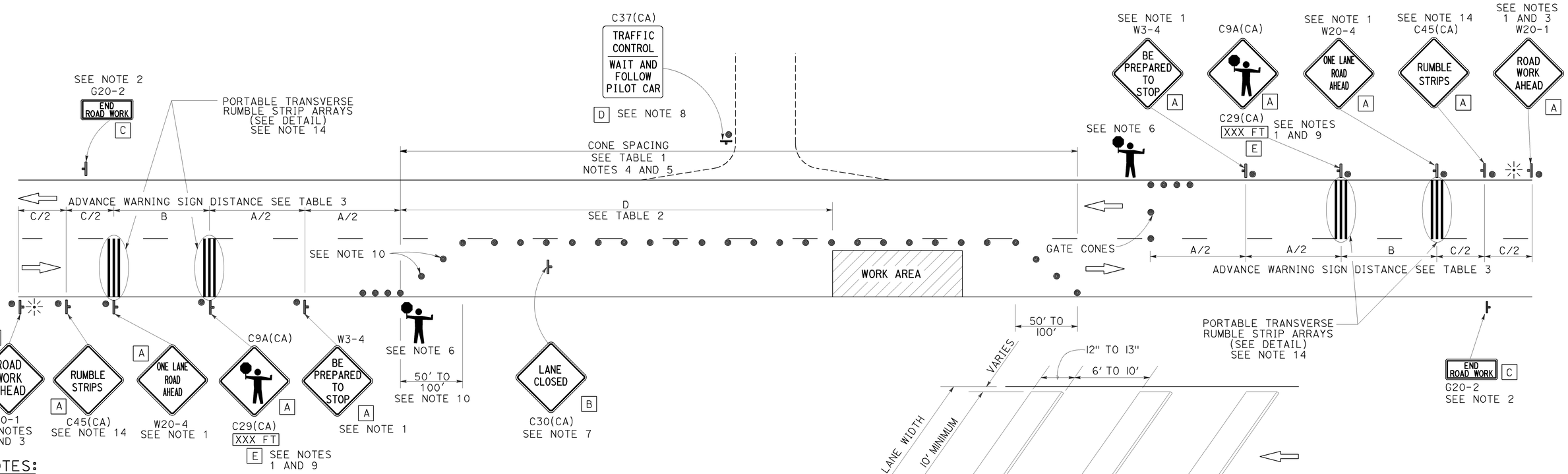

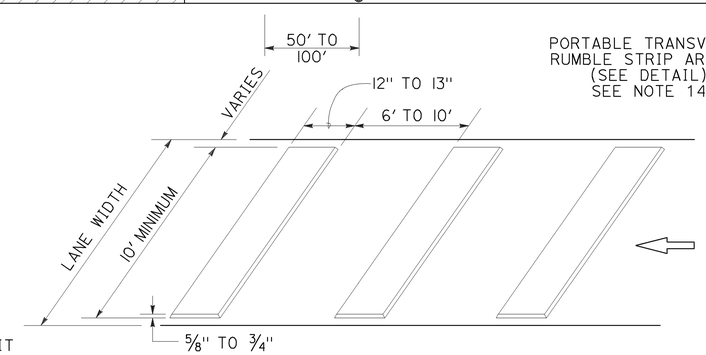

PORTABLE TRANSVERSE RUMBLE STRIP ARRAY DETAIL

NOTES:

1. Each advance warning sign in each direction of travel shall be equipped with at least two flags for daytime closure. Each flag shall be at least 16" x 16" in size and shall be orange or fluorescent red-orange in color. Flashing beacons shall be placed at the locations indicated for lane closure during hours of darkness.
2. A G20-2 "END ROAD WORK" sign, as appropriate, shall be placed at the end of the lane control unless the end of work area is obvious, or ends within a larger project's limits.
3. If the W20-1 sign would follow within 2000' of a stationary W20-1 or G20-1 "ROAD WORK NEXT _____ MILES", use a W20-4 sign for the first advance warning sign.
4. All cones used for lane closures during the hours of darkness shall be fitted with retroreflective bands (or sleeves) as specified in the specifications.
5. Portable delineators, placed at one-half the spacing indicated for traffic cones, may be used instead of cones for daytime closures only.
6. Additional advance flaggers may be required. Flagger should stand in a conspicuous place, be visible to approaching traffic as well as approaching vehicles after the first vehicle has stopped. During the hours of darkness, the flagging-station and flagger shall be illuminated and clearly visible to approaching traffic. The illumination footprint of the lighting on the ground shall be at least 20' in diameter. Place a minimum of four cones at 50' intervals in advance of flagger station as shown.
7. Place C30(CA) "LANE CLOSED" sign at 500' to 1000' intervals throughout extended work areas. They are optional if the work area is visible from the flagger station.
8. When a pilot car is used, place a C37(CA) "TRAFFIC CONTROL-WAIT AND FOLLOW PILOT CAR" sign with black legend on white background at all intersections, driveways and alleys without a flagger within traffic control area. Signs shall be clean and visible at all times. Where traffic can not be effectively self-regulated, at least one flagger shall be used at each intersection within traffic control area.
9. An optional C29(CA) sign may be placed below the C9A(CA) sign.
10. Either traffic cones or barricades shall be placed on the taper. Barricades shall be Type I, II, or III.
11. The color of the portable transverse rumble strips shall be black or orange. Use 2 arrays, each array shall consist of 3 rumble strips.
12. Portable transverse rumble strips shall not be placed on sharp horizontal or vertical curves nor shall they be placed through pedestrian crossings.
13. If the portable transverse rumble strips become out of alignment (skewed) by more than 6 inches, measured from one end to the other, they shall be readjusted to bring the placement back to the original location.
14. Portable transverse rumble strips are not required if any one of the following conditions is satisfied:
    A. Work duration occupies a location for four hours or less
    B. Posted speed limit is below 45 MPH
    C. Work is of emergency nature
    D. Work zone is in snow or icy weather conditions

1 **ADDED PER ADDENDUM No. 1 DATED OCTOBER 31, 2014**

LEGEND

- TRAFFIC CONE
- TEMPORARY TRAFFIC CONTROL SIGN
- PORTABLE FLASHING BEACON
- FLAGGER

SIGN PANEL SIZE (Min)

A	48" x 48"
B	30" x 30"
C	36" x 18"
D	36" x 42"
E	20" x 7"

STATE OF CALIFORNIA
DEPARTMENT OF TRANSPORTATION

TRAFFIC CONTROL SYSTEM FOR LANE CLOSURE ON TWO LANE CONVENTIONAL HIGHWAYS

NO SCALE

RSP T13 DATED OCTOBER 17, 2014 SUPERSEDES RSP T13 DATED JULY 18, 2014 AND RSP T13 DATED APRIL 19, 2013 AND STANDARD PLAN T13 DATED MAY 20, 2011 - PAGE 241 OF THE STANDARD PLANS BOOK DATED 2010.

REVISED STANDARD PLAN RSP T13

2010 REVISED STANDARD PLAN RSP T13

9-26-14