Dist	COUNTY	ROUTE	POST MILES TOTAL PROJECT	SHEET No.	TOTAL SHEETS
08	Riv	10	R71.8/R72.3	1	38

INDEX OF PLANS

SHEET No.	DESCRIPTION
1	TITLE AND LOCATION MAP
2	CONSTRUCTION AREA SIGNS
3-4	PLANTING PLANS
5-12	REVISED STANDARD PLANS

STRUCTURAL PLANS

13	GENERAL PLAN
14-25	SANITARY PLANS
26-38	ELECTRICAL PLANS

THE STANDARD PLANS LIST APPLICABLE TO THIS CONTRACT IS INCLUDED IN THE NOTICE TO BIDDERS AND SPECIAL PROVISIONS BOOK.

STATE OF CALIFORNIA

DEPARTMENT OF TRANSPORTATION

PROJECT PLANS FOR CONSTRUCTION ON

STATE HIGHWAY

IN RIVERSIDE COUNTY
NEAR COACHELLA
ABOUT 12.9 MILES EAST OF DILLON ROAD UNDERCROSSING
AT THE CACTUS CITY
SAFETY ROADSIDE REST AREA

TO BE SUPPLEMENTED BY STANDARD PLANS DATED 2010

LOCATION MAP

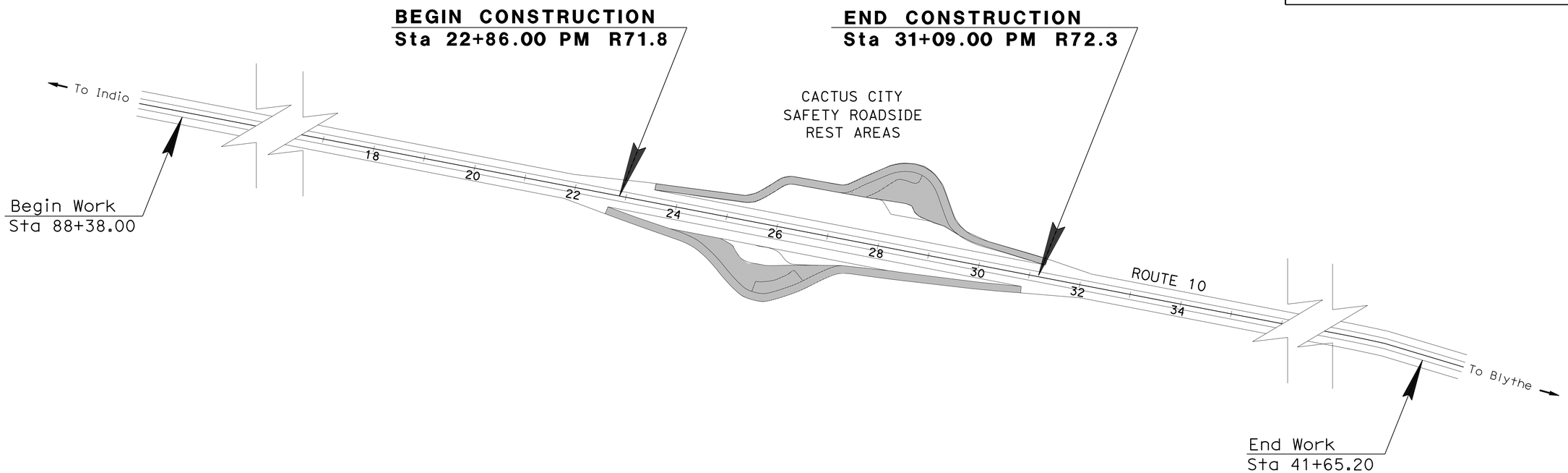

NO SCALE

PROJECT ENGINEER REGISTERED CIVIL ENGINEER — DATE 8-26-13

November 12, 2013
PLANS APPROVAL DATE

LICENSED LANDSCAPE ARCHITECT — Matthew Perry Hall No. 5350 — Signature — 10-31-13 Renewal Date — 8-26-13 Date — STATE OF CALIFORNIA

THE STATE OF CALIFORNIA OR ITS OFFICERS OR AGENTS SHALL NOT BE RESPONSIBLE FOR THE ACCURACY OR COMPLETENESS OF SCANNED COPIES OF THIS PLAN SHEET.

CONTRACT No.	08-0L9004
PROJECT ID	0800000444

LAST REVISION 08-26-13 — DATE PLOTTED => 13-NOV-2013 — TIME PLOTTED => 06:24

PROJECT MANAGER: MUSTAPHA IAALI

SENIOR LANDSCAPE ARCHITECT: RAY I. DESSELLE

THE CONTRACTOR SHALL POSSESS THE CLASS (OR CLASSES) OF LICENSE AS SPECIFIED IN THE "NOTICE TO BIDDERS."

Dist	COUNTY	ROUTE	POST MILES TOTAL PROJECT	SHEET No.	TOTAL SHEETS
08	Riv	10	R71.8/R72.3	2	38

W E Wasser 8-26-13
REGISTERED CIVIL ENGINEER DATE

11-12-13
PLANS APPROVAL DATE

REGISTERED PROFESSIONAL ENGINEER
W. E. WASSER
No. 37378
Exp. 6-30-14
CIVIL
STATE OF CALIFORNIA

THE STATE OF CALIFORNIA OR ITS OFFICERS OR AGENTS SHALL NOT BE RESPONSIBLE FOR THE ACCURACY OR COMPLETENESS OF SCANNED COPIES OF THIS PLAN SHEET.

LEGEND:

- CONSTRUCTION AREA SIGN (1 POST)
- CONSTRUCTION AREA SIGN (2 POSTS)
- (1-X) CONSTRUCTION AREA SIGN
- Exist ROADSIDE SIGN (2 POSTS)
- WORK AREA

LOCATION OF CONSTRUCTION
CACTUS CITY SAFETY ROADSIDE REST AREAS EASTBOUND AND WESTBOUND RAMP CLOSURES

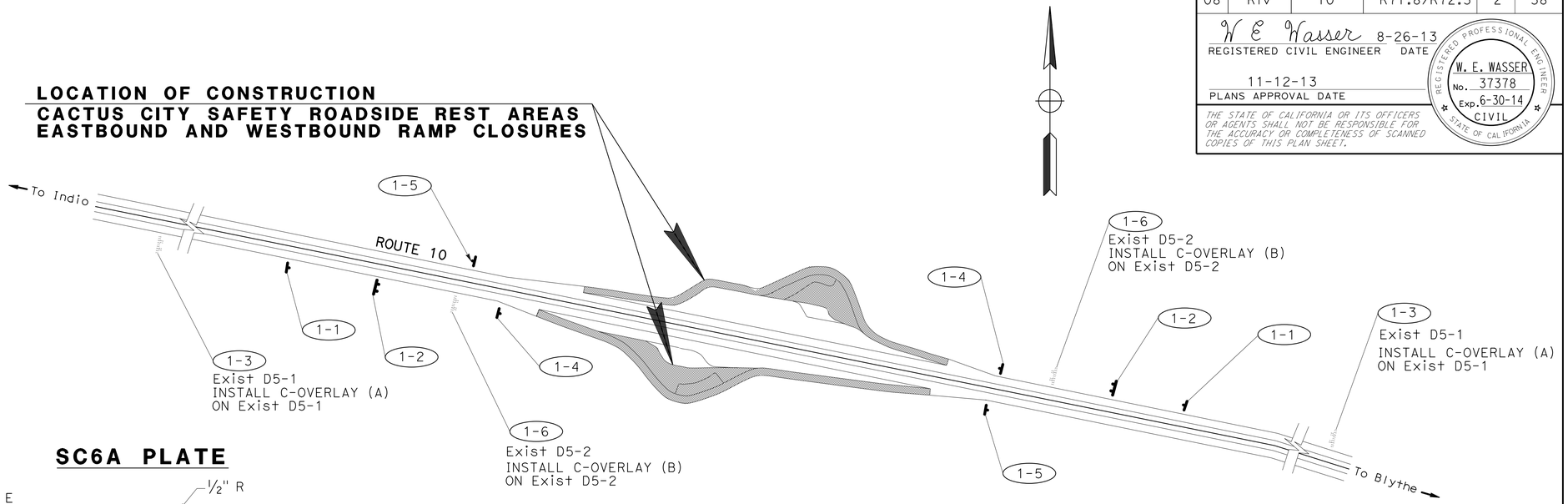

SC6-4 SPECIAL SIGN DETAIL

BLACK ON ORANGE REFLECTIVE BACKGROUND
INSTALLED AT CACTUS SAFETY ROADSIDE REST AREA AT EB AND WB RAMPS

SC6A PLATE

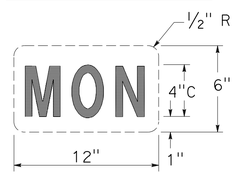

SC6B PLATE

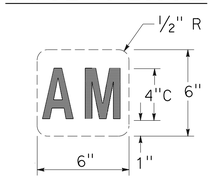

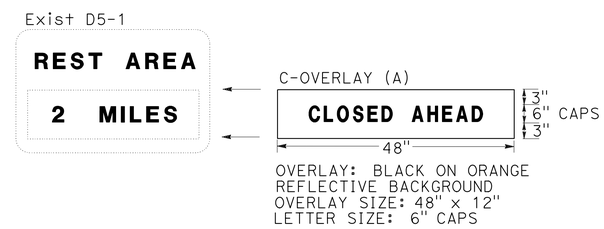

OVERLAY: BLACK ON ORANGE
REFLECTIVE BACKGROUND
OVERLAY SIZE: 48" x 12"
LETTER SIZE: 6" CAPS

C-OVERLAY (A) DETAIL

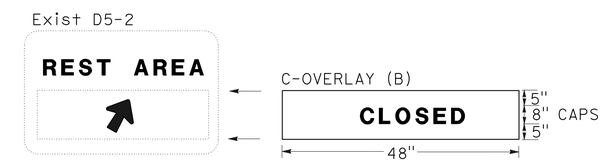

OVERLAY: BLACK ON ORANGE
REFLECTIVE BACKGROUND
OVERLAY SIZE: 48" x 18"
LETTER SIZE: 8" CAPS

C-OVERLAY (B) DETAIL

STATIONARY MOUNTED CONSTRUCTION AREA SIGNS

SIGN No. (X-X)	SIGN CODE		PANEL SIZE	SIGN MESSAGE	NUMBER OF POSTS AND SIZE	No. OF SIGNS
	FEDERAL	CALIFORNIA				
1-1	W20-1		48" x 48"	ROAD WORK AHEAD	1 - 6" x 6"	2
1-2		C40(CA)	72" x 36"	TRAFFIC FINES DOUBLED IN CONSTRUCTION ZONE	2 - 4" x 6"	2
1-3		C-OVERLAY (A)	48" x 12"	CLOSED AHEAD	--	2
1-4		SC6-4 SPECIAL	48" x 70"	REST AREA CLOSED, DY/MM/YY THRU DY/MM/YY,TIME	1 - 6" x 6"	2
1-5	G20-2		48" x 24"	END ROAD WORK	1 - 4" x 6"	2
1-6		C-OVERLAY (B)	48" x 18"	CLOSED	--	2

NOTES:

1. LOCATION OF THE CONSTRUCTION AREA SIGNS ARE APPROXIMATE. THE EXACT LOCATIONS WILL BE DETERMINED BY THE ENGINEER.
2. REFER TO Std PLANS T14 FOR TRAFFIC CONTROL REQUIREMENTS FOR LONG TERM CLOSURE OF WB AND EB CACTUS SAFETY ROADSIDE REST AREAS.
3. MINIMUM SPACING BETWEEN TWO CONSECUTIVE SIGNS SHALL BE 500 FEET OR AS DETERMINED BY THE ENGINEER.
4. SEE STANDARD PLAN T-14. REPLACE ALL CONES WITH CHANNELIZERS. USE SURFACE MOUNTED CHANNELIZERS (32 TOTAL).
5. SEE STANDARD PLAN T-14. USE TYPE III BARRICADES (8 TOTAL).

CONSTRUCTION AREA SIGNS

NO SCALE

CS-1

APPROVED FOR CONSTRUCTION AREA SIGN WORK ONLY

REVISED BY | DATE REVISED
PATTI BARTOLI | SHABBIR AHMED
CALCULATED-DESIGNED BY | CHECKED BY
FUNCTIONAL SUPERVISOR
W. E. WASSER

STATE OF CALIFORNIA - DEPARTMENT OF TRANSPORTATION
Caltrans® TRAFFIC DESIGN

LAST REVISION 08-26-13 | DATE PLOTTED => 12-NOV-2013 | TIME PLOTTED => 13:16

Dist	COUNTY	ROUTE	POST MILES TOTAL PROJECT	SHEET No.	TOTAL SHEETS
08	Riv	10	R71.8/R72.3	3	38

LICENSED LANDSCAPE ARCHITECT

11-12-13
PLANS APPROVAL DATE

LICENSED LANDSCAPE ARCHITECT
Matthew Perry Hall No. 5250
Signature
10-31-15
Renewal Date
8-26-13
Date
STATE OF CALIFORNIA

THE STATE OF CALIFORNIA OR ITS OFFICERS OR AGENTS SHALL NOT BE RESPONSIBLE FOR THE ACCURACY OR COMPLETENESS OF SCANNED COPIES OF THIS PLAN SHEET.

NOTE:

FOR ACCURATE RIGHT OF WAY AND ACCESS DATA, CONTACT RIGHT OF WAY ENGINEERING AT THE DISTRICT OFFICE.

LEGEND:

EROSION CONTROL

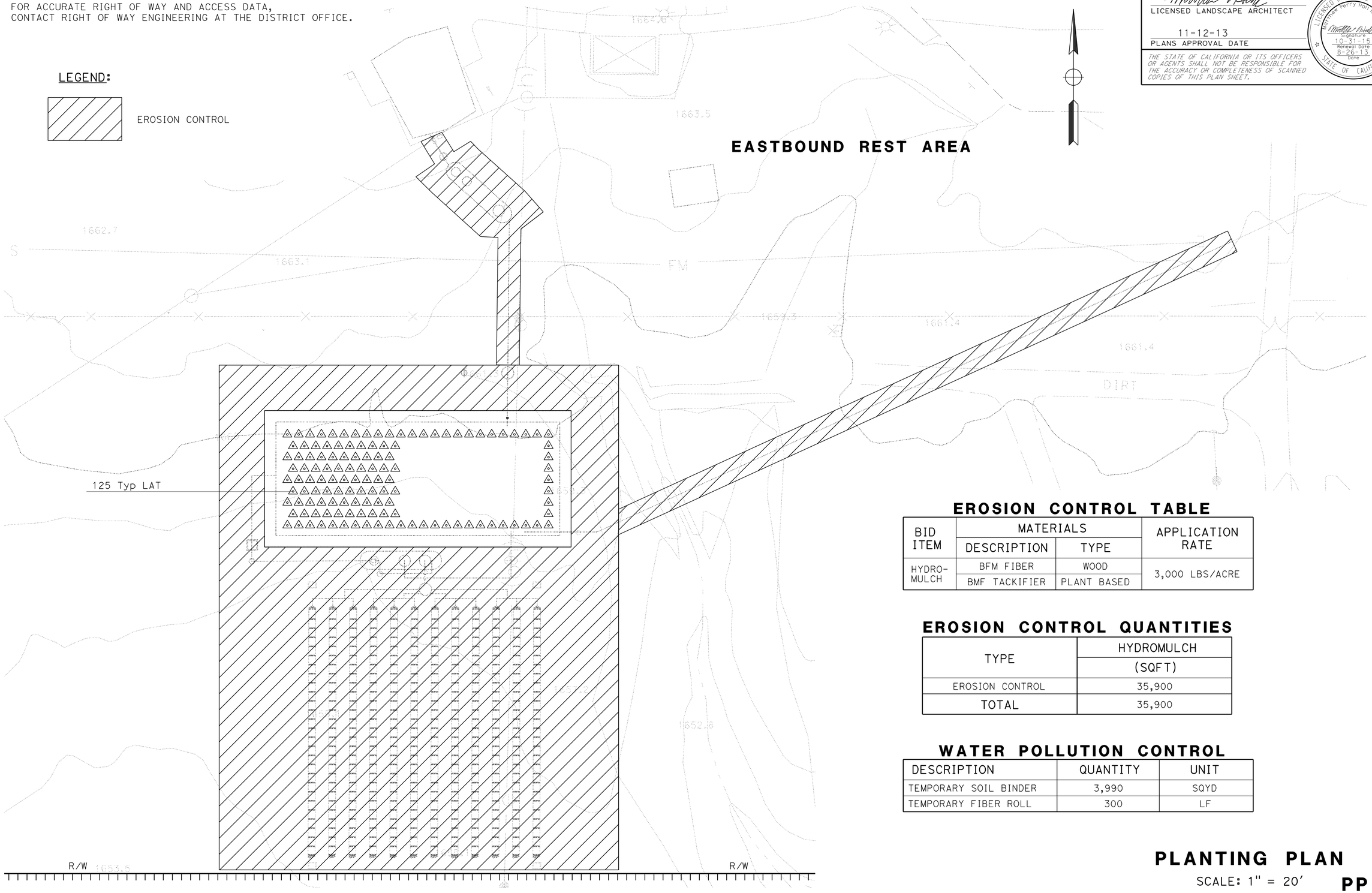

EROSION CONTROL TABLE

BID ITEM	MATERIALS		APPLICATION RATE
	DESCRIPTION	TYPE	
HYDRO-MULCH	BFM FIBER	WOOD	3,000 LBS/ACRE
	BMF TACKIFIER	PLANT BASED	

EROSION CONTROL QUANTITIES

TYPE	HYDROMULCH (SQFT)
EROSION CONTROL	35,900
TOTAL	35,900

WATER POLLUTION CONTROL

DESCRIPTION	QUANTITY	UNIT
TEMPORARY SOIL BINDER	3,990	SQYD
TEMPORARY FIBER ROLL	300	LF

PLANTING PLAN

SCALE: 1" = 20'

PP-1

STATE OF CALIFORNIA - DEPARTMENT OF TRANSPORTATION
Caltrans LANDSCAPE ARCHITECTURE

SENIOR LANDSCAPE ARCHITECT: RAY DESSELLE
CALCULATED-DESIGNED BY: TIM WANDS
CHECKED BY: MATTHEW HALL
REVISED BY
DATE REVISED

LAST REVISION 08-26-13
DATE PLOTTED => 12-NOV-2013
TIME PLOTTED => 14:02

Dist	COUNTY	ROUTE	POST MILES TOTAL PROJECT	SHEET No.	TOTAL SHEETS
08	Riv	10	R71.8/R72.3	4	38

LICENSED LANDSCAPE ARCHITECT

11-12-13
PLANS APPROVAL DATE

LICENSED LANDSCAPE ARCHITECT Matthew Perry Hall No. 5250 Signature 10-31-15 Renewal Date 8-26-13 Date STATE OF CALIFORNIA

THE STATE OF CALIFORNIA OR ITS OFFICERS OR AGENTS SHALL NOT BE RESPONSIBLE FOR THE ACCURACY OR COMPLETENESS OF SCANNED COPIES OF THIS PLAN SHEET.

ABBREVIATIONS:

AMEND — amendment
B & B — balled and burlapped
Dia — diameter
EA — each
LB — pound
Oz — ounce
Ft — foot/feet
SQFT — square feet
SQYD — square yard
CF — cubic feet
Max — maximum
Min — minimum
NCN — no common name
No. — number
Pkt — packet
PLT ESTB — plant establishment
Pvmt — pavement
R/W — right of way
SF — state furnished
TRVD — traveled
TOTM — top of the mound
TOW — top of wetland

PLANT LIST AND PLANTING SPECIFICATIONS

PLANT GROUP	PLANT No.	SYMBOL	BOTANICAL NAME	COMMON NAME	SIZE	QUANTITY EACH	HOLE SIZE (INCH) Dia	HOLE SIZE (INCH) DEPTH	BASIN TYPE	IRON SULFATE	SOIL AMEND	COMMERCIAL FERTILIZER PLANTING	COMMERCIAL FERTILIZER PLT ESTB	BASIN MULCH (CY)	STAKING	PLANTING LIMITS MINIMUM DISTANCE (ft) FROM TOW	TOTM	FENCE	WALL	PAVED DITCH	EARTH DITCH	ON CENTER (ft)	REMARKS
A	1	△	TYPHA LATIFOLIA	CATTAIL	NO. 1	125	③ ④	③ ④	--	--	--	--	--	--	--	2	2	--	--	--	--	5	SEWAGE TREATMENT WETLAND PLANT

APPLICABLE WHEN CIRCLED:

1 - QUANTITIES SHOWN ARE "PER PLANT" UNLESS SHOWN AS SQFT OR SQYD APPLICATION RATES
2 - AS SHOWN ON PLANS
③ - SUFFICIENT TO RECEIVE ROOT BALL
④ - TOP OF ROOT BALL BELOW WATER LEVEL
5 - SEE SPECIAL PROVISIONS
6 - SEE STANDARD SPECIFICATIONS
7 - AS SHOWN ON PLANS
8 - UNLESS OTHERWISE SHOWN ON PLANS
9 - FOLIAGE PROTECTOR REQUIRED
10 - ROOT PROTECTOR REQUIRED
11 - ROOT BARRIER REQUIRED
12 - STATE-FURNISHED
13 - REPLACEMENT PLANT SIZE

NOTE:

UNDERLINED PORTIONS OF BOTANICAL NAME INDICATE ABBREVIATIONS USED ON PLANTING PLANS.

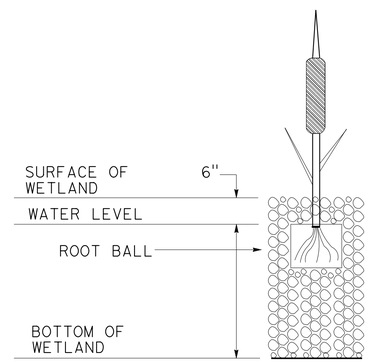

CATTAIL PLANTING DETAIL

NO SCALE

REVISED BY | DATE REVISED
TIM WANDS | MATTHEW HALL
CALCULATED-DESIGNED BY | CHECKED BY
SENIOR LANDSCAPE ARCHITECT
RAY DESSELLE

STATE OF CALIFORNIA - DEPARTMENT OF TRANSPORTATION
Caltrans LANDSCAPE ARCHITECTURE

PLANT LIST
PL-1

LAST REVISION 08-26-13 | DATE PLOTTED => 12-NOV-2013 TIME PLOTTED => 14:06

M

Maint	MAINTENANCE
Max	MAXIMUM
MB	METAL BEAM
MBB	METAL BEAM BARRIER
MBGR	METAL BEAM GUARD RAILING
Med	MEDIAN
MGS	MIDWEST GUARDRAIL SYSTEM
MH	MANHOLE
Min	MINIMUM
Misc	MISCELLANEOUS
Misc I & S	MISCELLANEOUS IRON AND STEEL
Mkr	MARKER
Mod	MODIFIED,
	MODIFY
Mon	MONUMENT
MP	METAL PLATE
MPGR	METAL PLATE GUARD RAILING
MR	MOVEMENT RATING
MSE	MECHANICALLY STABILIZED EMBANKMENT
Mt	MOUNTAIN, MOUNT
Mtl	MATERIAL
MVP	MAINTENANCE VEHICLE PULLOUT

N

N	NORTH
NB	NORTHBOUND
No.	NUMBER (MUST HAVE PERIOD)
Nos.	NUMBERS (MUST HAVE PERIOD)
NPS	NOMINAL PIPE SIZE
NS	NEAR SIDE
NSP	NEW STANDARD PLAN
NTS	NOT TO SCALE

O

Oblr	OBLITERATE
OC	OVERCROSSING
OD	OUTSIDE DIAMETER
OF	OUTSIDE FACE
OG	ORIGINAL GROUND
OGAC	OPEN GRADED ASPHALT CONCRETE
OGFC	OPEN GRADED FRICTION COURSE
OH	OVERHEAD
OHWM	ORDINARY HIGH WATER MARK
O-O	OUT TO OUT
Opp	OPPOSITE
OSD	OVERSIDE DRAIN

P

P	PAGE
PAP	PERFORATED ALUMINUM PIPE
PB	PULL BOX
PC	POINT OF CURVATURE,
	PRECAST
PCC	POINT OF COMPOUND CURVE,
	PORTLAND CEMENT CONCRETE
PCMS	PORTABLE CHANGEABLE MESSAGE SIGN
PCP	PERFORATED CONCRETE PIPE,
	PRESTRESSED CONCRETE PIPE
PCVC	POINT OF COMPOUND VERTICAL CURVE
PEC	PERMIT TO ENTER AND CONSTRUCT
Ped	PEDESTRIAN
Ped OC	PEDESTRIAN OVERCROSSING
Ped UC	PEDESTRIAN UNDERCROSSING
Perm Mtl	PERMEABLE MATERIAL

P continued

PG	PROFILE GRADE
PI	POINT OF INTERSECTION
PJP	PARTIAL JOINT PENETRATION
Pkwy	PARKWAY
₱,PL	PLATE
P/L	PROPERTY LINE
PM	POST MILE,
	TIME FROM NOON TO MIDNIGHT
PN	PAVING NOTCH
POC	POINT OF HORIZONTAL CURVE
POT	POINT OF TANGENT
POVC	POINT OF VERTICAL CURVE
PP	PIPE PILE,
	PLASTIC PIPE,
	POWER POLE
PPL	PREFORMED PERMEABLE LINER
PPP	PERFORATED PLASTIC PIPE
PRC	POINT OF REVERSE CURVE
PRF	PAVEMENT REINFORCING FABRIC
PRVC	POINT OF REVERSE VERTICAL CURVE
PS&E	PLANS, SPECIFICATIONS AND ESTIMATES
PS, P/S	PRESTRESSED
PSP	PERFORATED STEEL PIPE
PT	POINT OF TANGENCY
PVC	POLYVINYL CHLORIDE
Pvmt	PAVEMENT

Q

Qty	QUANTITY

R

R	RADIUS
R & D	REMOVE AND DISPOSE
R & S	REMOVE AND SALVAGE
R/C	RATE OF CHANGE
RCA	REINFORCED CONCRETE ARCH
RCB	REINFORCED CONCRETE BOX
RCP	REINFORCED CONCRETE PIPE
RCPA	REINFORCED CONCRETE PIPE ARCH
Rd	ROAD
Reinf	REINFORCED,
	REINFORCEMENT,
	REINFORCING
Rel	RELOCATE
Repl	REPLACEMENT
Ret	RETAINING
Rev	REVISED, REVISION
Rdwy	ROADWAY
RHMA	RUBBERIZED HOT MIX ASPHALT
Riv	RIVER
RM	ROAD-MIXED
RP	RADIUS POINT,
	REFERENCE POINT
RR	RAILROAD
RSP	ROCK SLOPE PROTECTION,
	REVISED STANDARD PLAN
Rt	RIGHT
Rte	ROUTE
RW	REDWOOD,
	RETAINING WALL
R/W	RIGHT OF WAY
Rwy	RAILWAY

S

S	SOUTH,
	SUPPLEMENT
SAE	STRUCTURE APPROACH EMBANKMENT
Salv	SALVAGE
SAPP	STRUCTURAL ALUMINUM PLATE PIPE
SB	SOUTHBOUND
SC	SAND CUSHION
SCSP	SLOTTED CORRUGATED STEEL PIPE
SD	STORM DRAIN
Sec	SECOND,
	SECTION
Sep	SEPARATION
SG	SUBGRADE
Shld	SHOULDER
Sht	SHEET
Sim	SIMILAR
₺	STATION LINE
SM	SELECTED MATERIAL
Spec	SPECIAL,
	SPECIFICATIONS
SPP	SLOTTED PLASTIC PIPE
SS	SLOPE STAKE
SSBM	STRAP AND SADDLE BRACKET METHOD
SSD	STRUCTURAL SECTION DRAIN
SSPA	STRUCTURAL STEEL PLATE ARCH
SSPP	STRUCTURAL STEEL PLATE PIPE
SSPPA	STRUCTURAL STEEL PLATE PIPE ARCH
SSRP	STEEL SPIRAL RIB PIPE
St	STREET
Sta	STATION
STBB	SINGLE THRIE BEAM BARRIER
Std	STANDARD
Str	STRUCTURE
Surf	SURFACING
SW	SIDEWALK,
	SOUND WALL
Swr	SEWER
Sym	SYMMETRICAL
S4S	SURFACE 4 SIDES

T

T	SEMI-TANGENT
Tan	TANGENT
TBB	THRIE BEAM BARRIER
Tbr	TIMBER
TC	TOP OF CURB
TCB	TRAFFIC CONTROL BOX
TCE	TEMPORARY CONSTRUCTION EASEMENT
Tel	TELEPHONE
Temp	TEMPORARY
TG	TOP OF GRADE
Tot	TOTAL
TP	TELEPHONE POLE
TPB	TREATED PERMEABLE BASE
TPM	TREATED PERMEABLE MATERIAL
Trans	TRANSITION

T continued

TS	TRANSVERSE,
	TRAFFIC SIGNAL,
	TUBULAR STEEL
Typ	TYPICAL

U

UC	UNDERCROSSING
UD	UNDERDRAIN
UG	UNDERGROUND
UON	UNLESS OTHERWISE NOTED
UP	UNDERPASS

V

V	VALVE,
	DESIGN SPEED
Var	VARIABLE,
	VARIES
VC	VERTICAL CURVE
VCP	VITRIFIED CLAY PIPE
Vert	VERTICAL
Via	VIADUCT
Vol	VOLUME

W

W	WEST,
	WIDTH
WB	WESTBOUND
WH	WEEP HOLE
WM	WIRE MESH
WS	WATER SURFACE
WSP	WELDED STEEL PIPE
Wt	WEIGHT
WV	WATER VALVE
WW	WINGWALL
WWLOL	WINGWALL LAYOUT LINE

X

X Sec	CROSS SECTION
Xing	CROSSING

Y

Yr	YEAR
Yrs	YEARS

Dist	COUNTY	ROUTE	POST MILES TOTAL PROJECT	SHEET No.	TOTAL SHEETS
08	Riv	10	R71.8/R72.3	5	38

Grace M. Tsushima
REGISTERED CIVIL ENGINEER

July 19, 2013
PLANS APPROVAL DATE

REGISTERED PROFESSIONAL ENGINEER
Grace M. Tsushima
No. C49814
Exp. 9-30-14
CIVIL
STATE OF CALIFORNIA

THE STATE OF CALIFORNIA OR ITS OFFICERS OR AGENTS SHALL NOT BE RESPONSIBLE FOR THE ACCURACY OR COMPLETENESS OF SCANNED COPIES OF THIS PLAN SHEET.

TO ACCOMPANY PLANS DATED 11-12-13

UNIT OF MEASUREMENT SYMBOLS:

Some of the symbols used in the project plan quantity tables and in the Bid Item List are:

TABLE A

SYMBOL USED	DEFINITIONS
ACRE	ACRE
CF	CUBIC FOOT
CY	CUBIC YARD
EA	EACH
GAL	GALLON
LB	POUND
LF	LINEAR FOOT
SQFT	SQUARE FOOT
SQYD	SQUARE YARD
STA	100 FEET
TAB	TABLET
TON	2,000 POUNDS

Some of the symbols used in the plans other than in the project plan quantity tables are:

TABLE B

SYMBOL USED	DEFINITIONS
ksi	KIPS PER SQUARE INCH
ksf	KIPS PER SQUARE FOOT
psi	POUNDS PER SQUARE INCH
psf	POUNDS PER SQUARE FOOT
lb/ft^3, pcf	POUNDS PER CUBIC FOOT
tsf	TONS PER SQUARE FOOT
mph, MPH *	MILES PER HOUR
ø	NOMINAL DIAMETER
oz	OUNCE
lb	POUND
kip	1,000 POUNDS
cal	CALORIE
ft	FOOT OR FEET
gal	GALLON

* For use on a sign panel only

STATE OF CALIFORNIA
DEPARTMENT OF TRANSPORTATION

ABBREVIATIONS (SHEET 2 OF 2)

NO SCALE

RSP A10B DATED JULY 19, 2013 SUPERSEDES STANDARD PLAN A10B DATED MAY 20, 2011 - PAGE 2 OF THE STANDARD PLANS BOOK DATED 2010.

REVISED STANDARD PLAN RSP A10B

2010 REVISED STANDARD PLAN RSP A10B

6-7-13

Dist	COUNTY	ROUTE	POST MILES TOTAL PROJECT	SHEET No.	TOTAL SHEETS
08	Riv	10	R71.8/R72.3	6	38

Gregory A. Balzer
LICENSED LANDSCAPE ARCHITECT

July 19, 2013
PLANS APPROVAL DATE

THE STATE OF CALIFORNIA OR ITS OFFICERS OR AGENTS SHALL NOT BE RESPONSIBLE FOR THE ACCURACY OR COMPLETENESS OF SCANNED COPIES OF THIS PLAN SHEET.

LICENSED LANDSCAPE ARCHITECT
Gregory A. Balzer 2576
08-28-13
Renewal Date
2-28-15
Renewal Date
7-19-13
Date
STATE OF CALIFORNIA

TO ACCOMPANY PLANS DATED 11-12-13

A

AB	AGGREGATE BASE
ABS	ACRYLONITRILE-BUTADIENE-STYRENE
AC	ASPHALT CONCRETE
ACC	ARMOR-CLAD CONDUCTORS
Adj	ADJACENT/ADJUSTABLE
AIC	AUXILIARY IRRIGATION CONTROLLER
Alt	ALTERNATIVE
AMEND	AMENDMENT
ARV	AIR RELEASE VALVE
AUTO	AUTOMATIC
AUX	AUXILIARY
AVB	ATMOSPHERIC VACUUM BREAKER

B

B&B	BALLED AND BURLAPPED
B/B	BRASS/BRONZE
B/B/PL	BRASS/BRONZE/PLASTIC
B/PL	BRASS/PLASTIC
BFM	BONDED FIBER MATRIX
Bit Ctd	BITUMINOUS COATED
BP	BOOSTER PUMP
BPA	BACKFLOW PREVENTER ASSEMBLY
BPE	BACKFLOW PREVENTER ENCLOSURE
BV	BALL VALVE

C

C	CONDUIT
CAP	CORRUGATED ALUMINUM PIPE
CARV	COMBINATION AIR RELEASE VALVE
CB	COUPLING BAND
CCA	CAM COUPLER ASSEMBLY
CEC	CONTROLLER ENCLOSURE CABINET
CHDPE	CORRUGATED HIGH DENSITY POLYETHYLENE
CL	CHAIN LINK
CNC	CONTROL AND NEUTRAL CONDUCTORS
Conc	CONCRETE
CP	COPPER PIPE
CS	COMPOST SOCK
CSP	CORRUGATED STEEL PIPE
CST	CENTER STRIP
CV	CHECK VALVE

D

Dia	DIAMETER
DIP	DUCTILE IRON PIPE
DIT	DRIP IRRIGATION TUBING
DG	DECOMPOSED GRANITE
DN	DIAMETER NOMINAL
DVA	DRIP VALVE ASSEMBLY

E

EC	EROSION CONTROL
ECTC	EROSION CONTROL TECHNOLOGY COUNCIL
Elect	ELECTRIC/ELECTRICAL
Elev	ELEVATION
ELL	ELBOW
ENCL	ENCLOSURE
EP	EDGE OF PAVEMENT
ES	EDGE OF SHOULDER
EST	END STRIP
ESTB	ESTABLISHMENT
ETW	EDGE OF TRAVELED WAY

F

F	FULL CIRCLE
F/P	FULL/PART CIRCLE
FCV	FLOW CONTROL VALVE
FERT	FERTILIZER
FG	FINISHED GRADE
FH	FLEXIBLE HOSE
FIPT	FEMALE IRON PIPE THREAD
FIS	FERTILIZER INJECTOR SYSTEM
FL	FLOW LINE
FR	FIBER ROLL
FS	FLOW SENSOR
FSC	FLOW SENSOR CABLE
FV	FLUSH VALVE

G

Galv	GALVANIZED
GARV	GARDEN VALVE
GARVA	GARDEN VALVE ASSEMBLY
GM	GRAVEL MULCH
GPH	GALLONS PER HOUR
GPM	GALLONS PER MINUTE
GSP	GALVANIZED STEEL PIPE
GV	GATE VALVE

H

H	HALF CIRCLE
HDPE	HIGH DENSITY POLYETHYLENE
HP	HORSEPOWER/HINGE POINT
HPL	HIGH PRESSURE LINE
Hwy	HIGHWAY

I

IC	IRRIGATION CONTROLLER
ICC	IRRIGATION CONTROLLER(S) IN CONTROLLER ENCLOSURE CABINET
ID	INSIDE DIAMETER
IFS	IRRIGATION FILTRATION SYSTEM
IPS	IRON PIPE SIZE
IPT	IRON PIPE THREAD
Irr	IRRIGATION

L

L	LENGTH

M

Max	MAXIMUM
MBGR	METAL BEAM GUARD RAILING
MCV	MANUAL CONTROL VALVE
MIC	MASTER IRRIGATION CONTROLLER
Min	MINIMUM
MIPT	MALE IRON PIPE THREAD
Misc	MISCELLANEOUS
Mtl	MATERIAL
MVP	MAINTENANCE VEHICLE PULLOUT

N

NCN	NO COMMON NAME
NL	NOZZLE LINE
No.	NUMBER
NPT	NATIONAL PIPE THREAD

O

O/C	ON CENTER
OD	OUTSIDE DIAMETER
OL	OVERLAP

P

P	PART CIRCLE
PB	PULL BOX
PCC	PORTLAND CEMENT CONCRETE
PE	POLYETHYLENE
Pkt	PACKET
PL	PLASTIC
PLS	PURE LIVE SEED
PLT	PLANT/PLANTING
PLT ESTB	PLANT ESTABLISHMENT
PM	POST MILE
PR	PRESSURE RATED
PRLV	PRESSURE RELIEF VALVE
PRV	PRESSURE REGULATING VALVE
PVC	POLYVINYL CHLORIDE
Pvmt	PAVEMENT

Q

Q	QUARTER CIRCLE
QCV	QUICK COUPLING VALVE

R

R	RADIUS
RCP	REINFORCED CONCRETE PIPE
RCV	REMOTE CONTROL VALVE
RCVM	REMOTE CONTROL VALVE (MASTER)
RCVMF	REMOTE CONTROL VALVE (MASTER) W/FLOW SENSOR
RCVP	REMOTE CONTROL VALVE W/PRESSURE REGULATOR
RCW	RECYCLED WATER
RECP	ROLLED EROSION CONTROL PRODUCT
REQ	REQUIRED
RICS	REMOTE IRRIGATION CONTROL SYSTEM
R/W	RIGHT OF WAY

S

S	SLIP
SCH	SCHEDULE
SF	STATE-FURNISHED
Shld	SHOULDER
Sq	SQUARE
SST	SIDE STRIP
Sta	STATION
Std	STANDARD
SW	SIDEWALK/SOUND WALL

T

T	THIRD CIRCLE/THREAD
TLS	TRUCK LOADING STANDPIPE
TQ	THREE QUARTER CIRCLE
TRM	TURF REINFORCEMENT MAT
TT	TWO-THIRDS CIRCLE
TWSA	TREE WELL SPRINKLER ASSEMBLY
Typ	TYPICAL

U

UG	UNDERGROUND

W

W	WIDTH
W/	WITH
WM	WATER METER
WS	WYE STRAINER
WSA	WYE STRAINER ASSEMBLY
WSP	WELDED STEEL PIPE
WWM	WELDED WIRE MESH

NOTE:
For additional abbreviations, see Standard Plans A10A and A10B.

STATE OF CALIFORNIA
DEPARTMENT OF TRANSPORTATION

LANDSCAPE AND EROSION CONTROL ABBREVIATIONS

NO SCALE

RSP H1 DATED JULY 19, 2013 SUPERSEDES STANDARD PLAN H1
DATED MAY 20, 2011 - PAGE 218 OF THE STANDARD PLANS BOOK DATED 2010.

REVISED STANDARD PLAN RSP H1

2010 REVISED STANDARD PLAN RSP H1

6-28-13

Dist	COUNTY	ROUTE	POST MILES TOTAL PROJECT	SHEET No.	TOTAL SHEETS
08	Riv	10	R71.8/R72.3	7	38

LICENSED LANDSCAPE ARCHITECT

JULY 19, 2013
PLANS APPROVAL DATE

THE STATE OF CALIFORNIA OR ITS OFFICERS OR AGENTS SHALL NOT BE RESPONSIBLE FOR THE ACCURACY OR COMPLETENESS OF SCANNED COPIES OF THIS PLAN SHEET.

Gregory A. Bolzer 2516 — Expiration Date 2-28-15 — Renewal Date 7-19-13 — Date — STATE OF CALIFORNIA

TO ACCOMPANY PLANS DATED 11-12-13

EXISTING	NEW	ITEM DESCRIPTION
		WATER METER (WM)
		BACKFLOW PREVENTER ASSEMBLY (BPA)
		BACKFLOW PREVENTER ENCLOSURE (BPE)
		BOOSTER PUMP (BP)
		TRUCK LOADING STANDPIPE (TLS)
	FS	FLOW SENSOR (FS)
		MASTER IRRIGATION CONTROLLER (MIC)
		AUXILIARY IRRIGATION CONTROLLER (AIC)
		IRRIGATION CONTROLLER (IC) IRRIGATION CONTROLLER (IC) (BATTERY) IRRIGATION CONTROLLER (IC) (SOLAR) IRRIGATION CONTROLLER (IC) (TWO WIRE) IRRIGATION CONTROLLER(S) IN CONTROLLER ENCLOSURE CABINET (ICC)
acc	ACC	ARMOR-CLAD CONDUCTORS (ACC)
cnc	CNC	CONTROL AND NEUTRAL CONDUCTORS (CNC)
		IRRIGATION CONDUIT
		EXTEND IRRIGATION CROSSOVER
dip	DIP	DUCTILE IRON PIPE (SUPPLY LINE) (MAIN) (DIP)
		GALVANIZED STEEL PIPE (SUPPLY LINE) (MAIN) (GSP)
		GALVANIZED STEEL PIPE (SUPPLY LINE) (LATERAL) (GSP)
		PLASTIC PIPE (SUPPLY LINE) (MAIN)
		PLASTIC PIPE (SUPPLY LINE) (LATERAL)
cp	CP	COPPER PIPE (SUPPLY LINE)
dit	DIT	DRIP IRRIGATION TUBING
		REMOTE CONTROL VALVE (RCV) REMOTE CONTROL VALVE (MASTER) (RCVM) REMOTE CONTROL VALVE (MASTER) W/FLOW METER (RCVMF)
P	P	REMOTE CONTROL VALVE W/PRESSURE REGULATOR (RCVP)
		EXISTING MANUAL CONTROL VALVE (MCV)
	V	DRIP VALVE ASSEMBLY (DVA)
	Y	WYE STRAINER ASSEMBLY (WSA)

EXISTING	NEW	ITEM DESCRIPTION
		GATE VALVE (GV)
		BALL VALVE (BV)
		QUICK COUPLING VALVE (QCV)
		CAM COUPLER ASSEMBLY (CCA)
		GARDEN VALVE ASSEMBLY (GARVA)
		PRESSURE REGULATING VALVE (PRV)
		PRESSURE RELIEF VALVE (PRLV)
		FLOW CONTROL VALVE (FCV)
		COMBINATION AIR RELEASE VALVE (CARV)
		CHECK VALVE (CV)
		FLUSH VALVE (FV)
		EXISTING NOZZLE LINE W/TURNING UNION
		EXISTING IRRIGATION SYSTEM
		EXISTING IRRIGATION SYSTEM TO BE REMOVED
		CHAIN LINK GATE
		QUICK COUPLING VALVE W/SPRINKLER PROTECTOR
3	3	SPRINKLER W/SPRINKLER PROTECTOR
	C	CONNECT TO EXISTING SYSTEM
		CAP
		CAP EXISTING
	\\\FR\\\	FIBER ROLL
	\\\CS\\\	COMPOST SOCK

RCV SIZE
IRRIGATION CONTROLLER
CONTROLLER STATION
VALVE IN PARALLEL (IF APPLICABLE)
GPM
QUANTITY OF SPRINKLERS (WHEN SHOWN)

* 2½"-A-2b-40-60

VALVE CODE

* VALVE CODES FOR EXISTING VALVES ARE SHOWN IN A DASHED ENCLOSURE.

STATE OF CALIFORNIA
DEPARTMENT OF TRANSPORTATION

LANDSCAPE AND EROSION CONTROL SYMBOLS

NO SCALE

RSP H2 DATED JULY 19, 2013 SUPERSEDES STANDARD PLAN H2 DATED MAY 20, 2011 - PAGE 219 OF THE STANDARD PLANS BOOK DATED 2010.

REVISED STANDARD PLAN RSP H2

2010 REVISED STANDARD PLAN RSP H2

6-28-13

TO ACCOMPANY PLANS DATED 11-12-13

Dist	COUNTY	ROUTE	POST MILES TOTAL PROJECT	SHEET No.	TOTAL SHEETS
08	Riv	10	R71.8/R72.3	8	38

REGISTERED CIVIL ENGINEER

April 19, 2013
PLANS APPROVAL DATE

REGISTERED PROFESSIONAL ENGINEER Gurinderpal Bhullar No. C48815 Exp. 9-30-14 CIVIL STATE OF CALIFORNIA

THE STATE OF CALIFORNIA OR ITS OFFICERS OR AGENTS SHALL NOT BE RESPONSIBLE FOR THE ACCURACY OR COMPLETENESS OF SCANNED COPIES OF THIS PLAN SHEET.

NOTES:

See Revised Standard Plan RSP T9 for tables.

Use cone spacing X for taper segment, Y for tangent segment or Z for conflict situations, as approriate, per Table 1, unless X, Y, or Z cone spacing is shown on this sheet.

Unless otherwise specified in the special provisions, all temporary warning signs shall have black legend on fluorescent orange background.

California codes are designated by (CA). Otherwise, Federal (MUTCD) codes are shown.

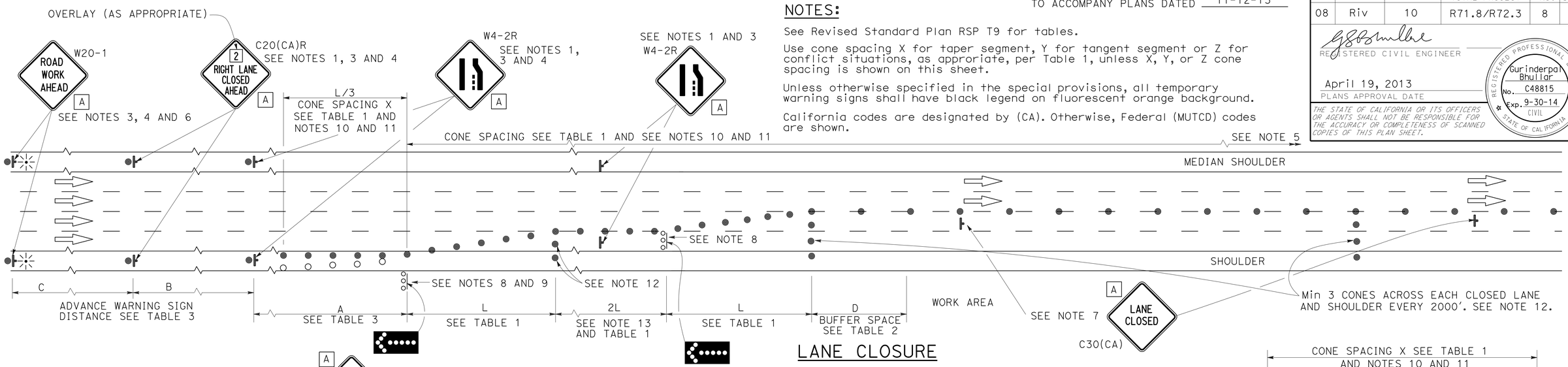

LANE CLOSURE

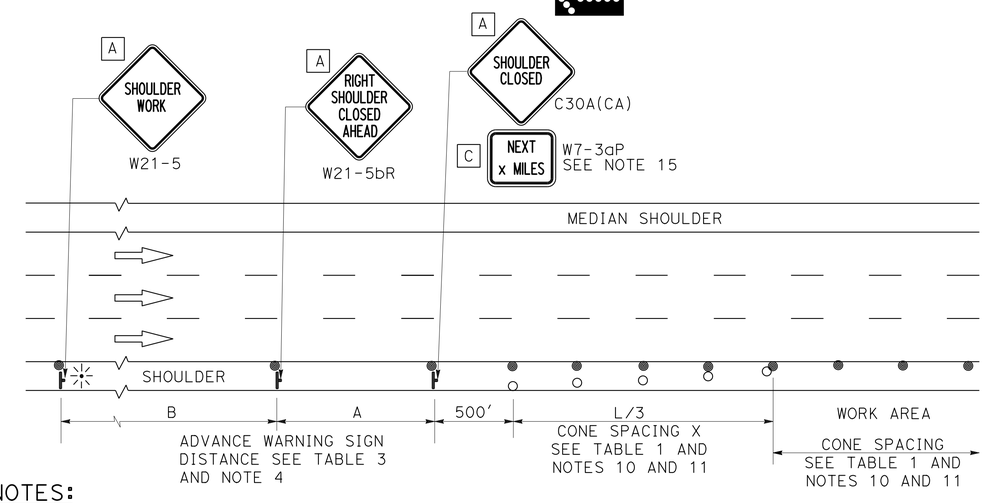

SHOULDER CLOSURE

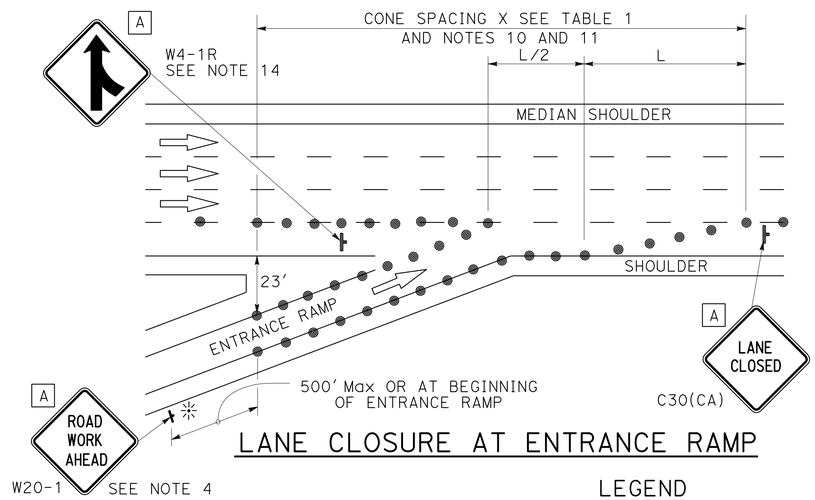

LANE CLOSURE AT ENTRANCE RAMP

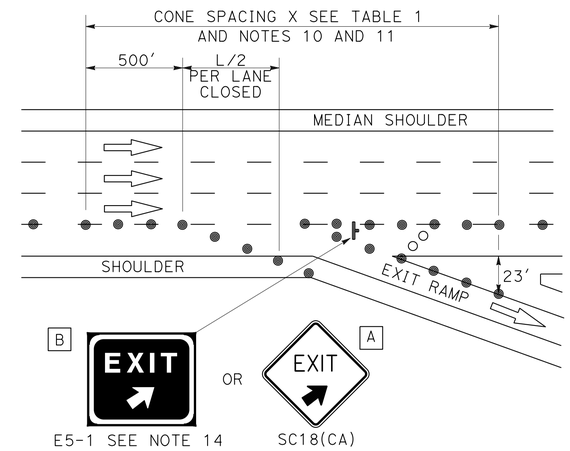

LANE CLOSURE AT EXIT RAMP

NOTES:

1. Median lane closures shall conform to the details as shown except that C20(CA)L and W4-2L signs shall be used.
2. At least one person shall be assigned to provide full time maintenance of traffic control devices for lane closures.
3. Duplicate sign installations are not required:
   a) On opposite shoulder if at least one-half of the available lanes remain open to traffic.
   b) In the median if the width of the median shoulder is less than 8' and the outside lanes are to be closed.
4. Each advance warning sign on each side of the roadway shall be equipped with at least two flags for daytime closure. Each flag shall be at least 16" x 16" in size and shall be orange or fluorescent red-orange in color. Flashing beacons shall be placed at the locations indicated for lane closure during hours of darkness.
5. A G20-2 "END ROAD WORK" sign, with minimum size of 48" x 24" as appropriate, shall be placed at the end of the lane closure unless the end of work area is obvious or ends within a larger project's limits.
6. If the W20-1 sign would follow within 2000' of a stationary W20-1 or G20-1 "ROAD WORK NEXT _____ MILES", use a C20(CA) sign for the first advance warning sign.
7. Place a C30(CA) sign every 2000' throughout length of lane closure.
8. One flashing arrow sign for each lane closed. The flashing arrow signs shall be Type I.
9. A minimum 1500' of sight distance shall be provided where possible for vehicles approaching the first flashing arrow sign. Lane closures shall not begin at top of crest vertical curve or on a horizontal curve.
10. All cones used for lane closures during the hours of darkness shall be fitted with retroreflective bands (or sleeves) as specified in the specifications.
11. Portable delineators, placed at one-half the spacing indicated for traffic cones may be used instead of cones for daytime closures only.
12. Unless otherwise specified in the special provisions, a minimum of 3 cones shall be placed transversely across each closed lane and shoulder at each location where a taper across a traffic lane ends and every 2000' as shown on the "Lane Closure" detail. Two Type II barricades may be used instead of the 3 cones. The transverse alignment of the cones or barricades on the closed shoulder may be shifted from the transverse alignment to provide access to the work.
13. Unless otherwise specified in the special provisions, the 2L tangent shown along lane lines shall be used between the L tapers required for each closed traffic lane.
14. Unless otherwise specified in the special provisions, the E5-1 or SC18(CA) and W4-1 signs shall be used as shown.
15. A W7-3aP "NEXT____ MILES" plaque must be used if theshoulder closure extends beyond the distance that can be perceived by road users.

LEGEND

- TRAFFIC CONE
- TRAFFIC CONE (OPTIONAL TAPER)
- TEMPORARY TRAFFIC CONTROL SIGN
- FLASHING ARROW SIGN (FAS)
- FAS SUPPORT OR TRAILER
- PORTABLE FLASHING BEACON

SIGN PANEL SIZE (Min)

A	48" x 48"
B	72" x 60"
C	36" x 30"

STATE OF CALIFORNIA
DEPARTMENT OF TRANSPORTATION

TRAFFIC CONTROL SYSTEM FOR LANE CLOSURE ON FREEWAYS AND EXPRESSWAYS

NO SCALE

RSP T10 DATED APRIL 19, 2013 SUPERSEDES STANDARD PLAN T10 DATED MAY 20, 2011 - PAGE 237 OF THE STANDARD PLANS BOOK DATED 2010.

REVISED STANDARD PLAN RSP T10

2010 REVISED STANDARD PLAN RSP T10

12-18-12

Dist	COUNTY	ROUTE	POST MILES TOTAL PROJECT	SHEET No.	TOTAL SHEETS
08	Riv	10	R71.8/R72.3	9	38

REGISTERED CIVIL ENGINEER

April 19, 2013
PLANS APPROVAL DATE

REGISTERED PROFESSIONAL ENGINEER Gurinderpal Bhullar No. C48815 Exp. 9-30-14 CIVIL STATE OF CALIFORNIA

THE STATE OF CALIFORNIA OR ITS OFFICERS OR AGENTS SHALL NOT BE RESPONSIBLE FOR THE ACCURACY OR COMPLETENESS OF SCANNED COPIES OF THIS PLAN SHEET.

TO ACCOMPANY PLANS DATED 11-12-13

TYPICAL RAMP CLOSURES

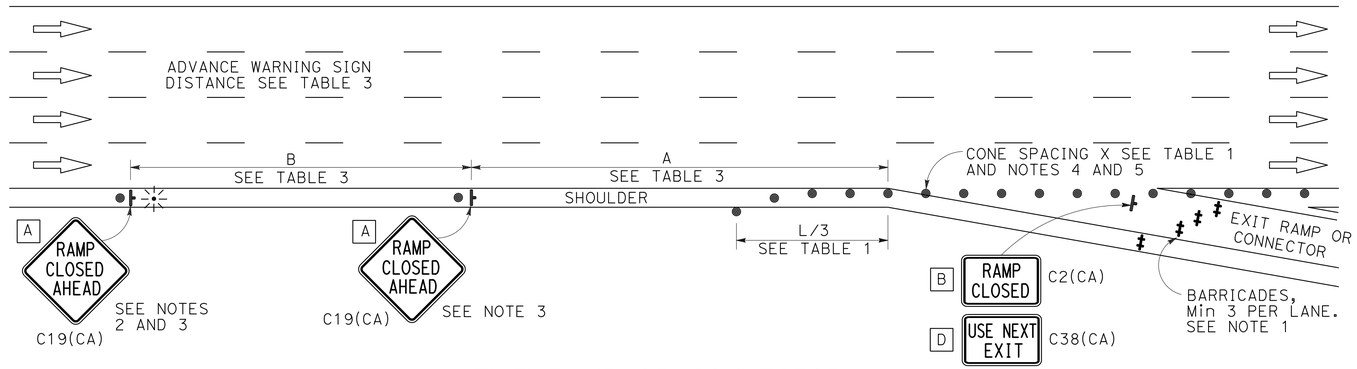

EXIT RAMP OR CONNECTOR

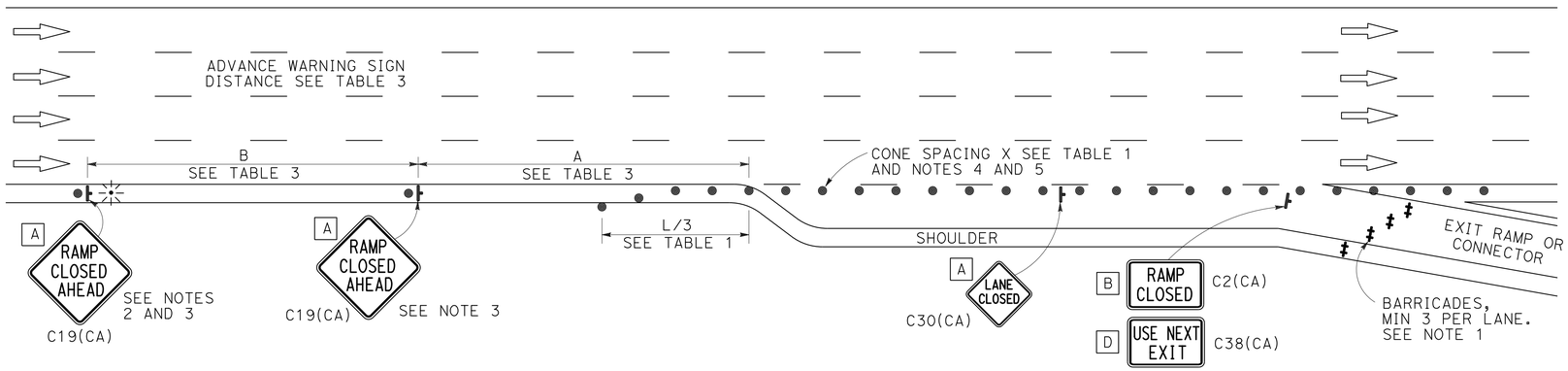

EXIT RAMP OR CONNECTOR WITH ADDITIONAL LANE

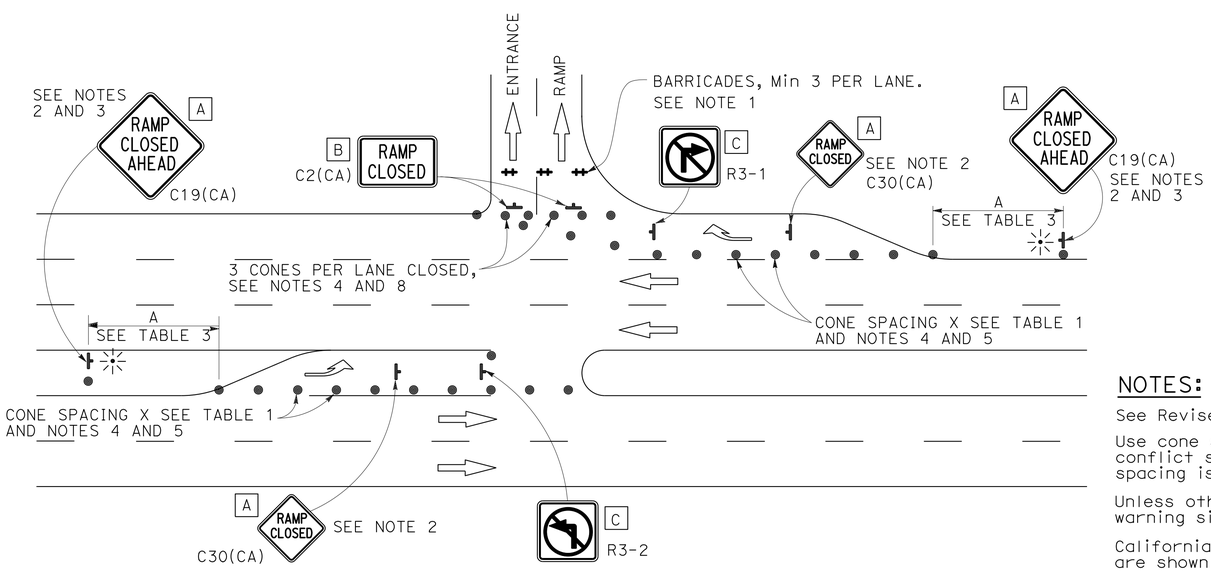

ENTRANCE RAMP WITH TURNING POCKETS

SIGN PANEL SIZE (Min)

- A 48" x 48"
- B 48" x 30"
- C 36" x 36"
- D 48" x 36"

LEGEND

- TRAFFIC CONE
- TEMPORARY TRAFFIC CONTROL SIGN
- BARRICADES
- PORTABLE FLASHING BEACON

NOTES:

1. Barricades shall be Type I, II, or III for closures lasting one week or less and Type III for closures lasting longer than one week.
2. In addition to placing the C19(CA) "RAMP CLOSED AHEAD" and C30(CA) "RAMP CLOSED" signs, black on orange overlay plates with the word "CLOSED" may be mounted, as directed by the Engineer, on all guide signs that refer to the closed ramp. The letter size on the overlay shall be the same as the guide sign.
3. Each advance C19(CA) "RAMP CLOSED AHEAD" sign shall be equipped with at least two flags for daytime closure. Each flag shall be at least 16" x 16" in size and shall be orange or fluorescent red-orange in color. A flashing beacon shall be placed on top of the first C19(CA) sign during hours of darkness.
4. All cones used for ramp closures during the hours of darkness shall be fitted with retroreflective bands (or sleeves) as specified in the specifications.
5. Portable delineators, placed at one-half the spacing indicated for traffic cones, may be used instead of cones for daytime ramp closures only.
6. At least one person shall be assigned to provide full time maintenance of traffic control devices, unless otherwise directed by the Engineer.
7. The existing "EXIT" signs shall be covered during ramp closures.
8. A minimum of 3 cones shall be placed transversely across each closed lane and shoulder.

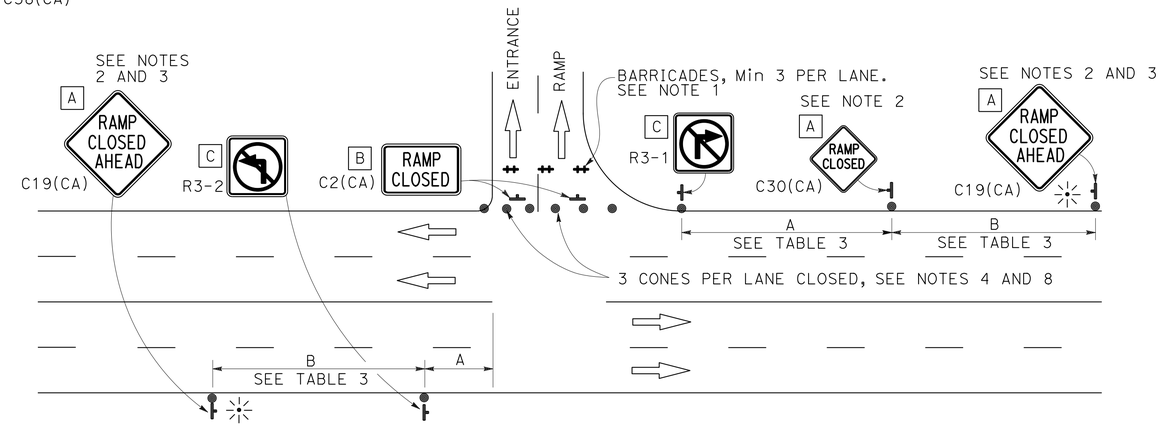

ENTRANCE RAMP WITHOUT TURNING POCKETS

NOTES:

See Revised Standard Plan RSP T9 for tables.

Use cone spacing X for taper segment, Y for tangent segment or Z for conflict situations, as approriate, per Table 1, unless X, Y, or Z cone spacing is shown on this sheet.

Unless otherwise specified in the special provisions, all temporary warning signs shall have black legend on fluorescent orange background.

California codes are designated by (CA). Otherwise, Federal (MUTCD) codes are shown.

STATE OF CALIFORNIA
DEPARTMENT OF TRANSPORTATION

TRAFFIC CONTROL SYSTEM FOR RAMP CLOSURE

NO SCALE

RSP T14 DATED APRIL 19, 2013 SUPERSEDES STANDARD PLAN T14 DATED MAY 20, 2011 - PAGE 242 OF THE STANDARD PLANS BOOK DATED 2010.

REVISED STANDARD PLAN RSP T14

2010 REVISED STANDARD PLAN RSP T14

12-18-12

Dist	COUNTY	ROUTE	POST MILES TOTAL PROJECT	SHEET No.	TOTAL SHEETS
08	Riv	10	R71.8/R72.3	10	38

Theresa Gabriel
REGISTERED ELECTRICAL ENGINEER

July 19, 2013
PLANS APPROVAL DATE

REGISTERED PROFESSIONAL ENGINEER Theresa Aziz Gabriel No. E15129 Exp. 6-30-14 ELECTRICAL STATE OF CALIFORNIA

THE STATE OF CALIFORNIA OR ITS OFFICERS OR AGENTS SHALL NOT BE RESPONSIBLE FOR THE ACCURACY OR COMPLETENESS OF SCANNED COPIES OF THIS PLAN SHEET.

TO ACCOMPANY PLANS DATED 11-12-13

LEGEND:

AB	ABANDON. IF APPLIED TO CONDUIT, REMOVE CONDUCTORS
BC	INSTALL PULL BOX IN EXISTING CONDUIT RUN
BP	PEDESTRIAN BARRICADE, TYPE AS INDICATED ON PLAN
CB	INSTALL CONDUIT INTO EXISTING PULL BOX
CC	CONNECT NEW AND EXISTING CONDUIT. REMOVE EXISTING CONDUCTORS AND INSTALL CONDUCTORS AS INDICATED
CF	CONDUIT TO REMAIN FOR FUTURE USE. REMOVE CONDUCTORS. INSTALL PULL TAPE
DH	DETECTOR HANDHOLE
FA	FOUNDATION TO BE ABANDONED
IS	INSTALL SIGN ON SIGNAL MAST ARM
NS	NO SLIP BASE ON STANDARD
PEC	PHOTOELECTRIC CONTROL
PEU	PHOTOELECTRIC UNIT
RC	EQUIPMENT OR MATERIAL TO BE REMOVED AND BECOME THE PROPERTY OF THE CONTRACTOR
RE	REMOVE ELECTROLIER, FUSES AND BALLAST. TAPE ENDS OF CONDUCTORS
RL	RELOCATE EQUIPMENT
RR	REMOVE AND REUSE EQUIPMENT
RS	REMOVE AND SALVAGE EQUIPMENT
SC	SPLICE NEW TO EXISTING CONDUCTORS
SD	SERVICE DISCONNECT
TSP	TELEPHONE SERVICE POINT

ABBREVIATIONS

APS	ACCESSIBLE PEDESTRIAN SIGNAL
BBS	BATTERY BACKUP SYSTEM
BC	BOLT CIRCLE
BPB	BICYCLE PUSH BUTTON
C	CONDUIT
CB	CIRCUIT BREAKER
CCTV	CLOSED CIRCUIT TELEVISION
Ckt	CIRCUIT
CMS	CHANGEABLE MESSAGE SIGN
Ctid	CALTRANS IDENTIFICATION
Comm	COMMUNICATION
DLC	LOOP DETECTOR LEAD-IN CABLE
EMS	EXTINGUISHABLE MESSAGE SIGN
EVUC	EMERGENCY VEHICLE UNIT CABLE
EVUD	EMERGENCY VEHICLE UNIT DETECTOR
FB	FLASHING BEACON
FBCA	FLASHING BEACON CONTROL ASSEMBLY
FBS	FLASHING BEACON WITH SLIP BASE
FO	FIBER OPTIC
G	EQUIPMENT GROUNDING CONDUCTOR
GB	GROUND BUS
GFCI	GROUND FAULT CIRCUIT INTERRUPTER
HAR	HIGHWAY ADVISORY RADIO
Hex	HEXAGONAL
HPS	HIGH PRESSURE SODIUM
IISNS	INTERNALLY ILLUMINATED STREET NAME SIGN
ISL	INDUCTION SIGN LIGHTING
LED	LIGHT EMITTING DIODE
LMA	LUMINAIRE MAST ARM
LPS	LOW PRESSURE SODIUM
Ltg	LIGHTING
Lum	LUMINAIRE
M	METERED
MAT	MAST ARM MOUNTING TOP ATTACHMENT
MAS	MAST ARM MOUNTING SIDE ATTACHMENT
M/M	MULTIPLE TO MULTIPLE TRANSFORMER
Mtg	MOUNTING
MV	MERCURY VAPOR LIGHTING FIXTURE
MVDS	MICROWAVE VEHICLE DETECTION SYSTEM
N	NEUTRAL (GROUNDED CONDUCTOR)
NB	NEUTRAL BUS
NC	NORMALLY CLOSE
NO	NORMALLY OPEN
P	CIRCUIT BREAKER'S POLE
PB	PULL BOX
PBA	PUSH BUTTON ASSEMBLY
PEC	PHOTOELECTRIC CONTROL
Ped	PEDESTRIAN
PEU	PHOTOELECTRIC UNIT
PT	CONDUIT WITH PULL TAPE
RE	RELOCATED EQUIPMENT
RM	RAMP METERING
RWIS	ROADSIDE WEATHER INFORMATION SYSTEM
SB	SLIP BASE
SIC	SIGNAL INTERCONNECT CABLE
Sig	SIGNAL
SMA	SIGNAL MAST ARM
SNS	STREET NAME SIGN
SP	SERVICE POINT
TDC	TELEPHONE DEMARCATION CABINET
TMS	TRAFFIC MONITORING STATION
TOS	TRAFFIC OPERATIONS SYSTEM
Veh	VEHICLE
VIVDS	VIDEO IMAGE VEHICLE DETECTION SYSTEM
WIM	WEIGH-IN-MOTION
Xfmr	TRANSFORMER

SOFFIT AND WALL MOUNTED LUMINAIRES

PENDANT, 70 W HPS UNLESS OTHERWISE SPECIFIED

FLUSH, 70 W HPS UNLESS OTHERWISE SPECIFIED

WALL SURFACE, 70 W HPS UNLESS OTHERWISE SPECIFIED

EXISTING SOFFIT OR WALL LUMINAIRE TO REMAIN UNMODIFIED

EXISTING SOFFIT OR WALL LUMINAIRE TO BE MODIFIED AS SPECIFIED

NOTE:

Arrow indicates "street side" of luminaire.

COMMONLY USED SYMBOLS FOR UNITED STATES CUSTOMARY UNITS OF MEASUREMENT:

SYMBOL USED	DEFINITIONS
Ω	OHMS
min	MINUTE
s	SECOND
bps	BITS PER SECOND
Bps	BYTES PER SECOND
A	AMPERE
V	VOLT
V(dc)	VOLT (DIRECT CURRENT)
V(ac)	VOLT (ALTERNATING CURRENT)
FC	FOOT - CANDLE
W	WATTS
VA	VOLT-AMPERE
M	MEGA
k	KILO
m	MILLI
μ	MICRO
P	PICO
Hz	HERTZ

MISCELLANEOUS ELECTROLIERS

NEW	EXISTING	
		LUMINAIRE ON WOOD POLE
		NON-STANDARD ELECTROLIER (SEE PROJECT NOTES OR PROJECT PLANS)
		CITY ELECTROLIER
		ELECTROLIER FOUNDATION (FUTURE INSTALLATION)

NOTES:

1. HPS luminaires shall be 310 W HPS when installed on Type 21, 21D, 30, 31 and 32 Standards, unless otherwise specified. HPS luminaires shall be 200 W when installed on other type standards or poles, unless otherwise specified.
2. LED luminaires shall be 235 W when installed on Type 21, 21D, 30, 31 and 32 Standards, unless otherwise specified. LED luminaires shall be 165 W when installed on other type standards or poles, unless otherwise specified.
3. Luminaires shall be the cutoff type, ANSI Type III medium cutoff lighting distribution, unless otherwise specified.

STANDARD ELECTROLIER

NEW	EXISTING	STANDARD TYPE
		15
		15D
		15 STRUCTURE
		15D STRUCTURE
		21
		21D
		21 STRUCTURE
		21D STRUCTURE
		30
		31
		32

STATE OF CALIFORNIA
DEPARTMENT OF TRANSPORTATION

ELECTRICAL SYSTEMS (LEGEND AND ABBREVIATIONS)

NO SCALE

RSP ES-1A DATED JULY 19, 2013 SUPERSEDES STANDARD PLAN ES-1A DATED MAY 20, 2011 - PAGE 425 OF THE STANDARD PLANS BOOK DATED 2010.

REVISED STANDARD PLAN RSP ES-1A

2010 REVISED STANDARD PLAN RSP ES-1A

Dist	COUNTY	ROUTE	POST MILES TOTAL PROJECT	SHEET No.	TOTAL SHEETS
08	Riv	10	R71.8/R72.3	11	38

Theresa Gabriel
REGISTERED ELECTRICAL ENGINEER

July 19, 2013
PLANS APPROVAL DATE

REGISTERED PROFESSIONAL ENGINEER
Theresa Aziz Gabriel
No. E15129
Exp. 6-30-14
ELECTRICAL
STATE OF CALIFORNIA

THE STATE OF CALIFORNIA OR ITS OFFICERS OR AGENTS SHALL NOT BE RESPONSIBLE FOR THE ACCURACY OR COMPLETENESS OF SCANNED COPIES OF THIS PLAN SHEET.

TO ACCOMPANY PLANS DATED 11-12-13

EQUIPMENT IDENTIFICATION

ILLUMINATED SIGN IDENTIFICATION NUMBER:

SIGN No. 12345
10 ISL SCI 1.0

- SIGN NUMBER - PLACE ON POST OR STRUCTURE
- TRANSFORMER RATING (kVA)
- LIGHTING CONTROL TYPE
- NUMBER AND TYPE OF FIXTURES

} DO NOT PLACE ON STANDARD OR STRUCTURE

ELECTROLIER OR EQUIPMENT IDENTIFICATION NUMBER:

12345 - 15'-0"

- MAST ARM LENGTH, IF SHOWN. DO NOT PLACE ON STANDARD OR STRUCTURE
- EQUIPMENT NUMBER - PLACE ON STANDARD OR STRUCTURE. EXISTING EQUIPMENT NUMBERS ARE SHOWN IN PARENTHESIS

CONDUIT AND CONDUCTOR IDENTIFICATION:

1½"C, 2#10, 15#14, 2 DLC, 12P#18

- PAIR
- NUMBER AND SIZE OF CONDUCTORS AND CABLES
- SIZE OF CONDUIT IN INCHES
- Ø1, Ø2, Ø2P, etc. — TRAFFIC PHASE IDENTIFICATION FOR SIGNAL FACES, DETECTORS AND PHASE DIAGRAMS
- 1 2 3 — LEGEND NUMBERS
- A B C — EQUIPMENT, SIGNAL POLES, INSTALLATION OR ITEMS
- 1 2 3 — CONDUIT RUN NUMBERS

SIGNAL AND LIGHTING STANDARD (TYPICAL DESIGNATION):

19A - 3 - 100

- WIND VELOCITY = 100 mph
- CASE 3 ARM LOADING
- STANDARD TYPE
- STANDARD PLAN SHEET NUMBER
- DETAIL, NUMBER, SECTION, TYPE OR ELEVATION

MISCELLANEOUS EQUIPMENT

NEW	EXISTING	
CMS	cms	CHANGEABLE MESSAGE SIGN
		CLOSED CIRCUIT TELEVISION CAMERA
		HIGHWAY ADVISORY RADIO POLE AND ANTENNA
EMS	ems	EXTINGUISHABLE MESSAGE SIGN
M V	m v	DETECTION DEVICE M = MICROWAVE SENSOR V = VIDEO IMAGE SENSOR

WIRING DIAGRAM LEGEND

- EXTERNAL CONDUCTOR
- CONDUCTOR OR BUS
- TIE POINT
- CONTACTOR COIL
- CONTACTOR, NO CONTACT
- TERMINAL BLOCKS
- CONTACTOR, NC CONTACT
- ENCLOSURE BOND
- GROUNDING ELECTRODE
- CIRCUIT BREAKER
- RECEPTACLE

PULL BOXES

NEW	EXISTING	
		PULL BOX, No. 5 UNLESS OTHERWISE INDICATED OR NOTED
3	9A(21)	PULL BOX, ADDITIONAL DESIGNATIONS OR DESCRIPTIONS

3 No. 3½ PULL BOX
5 No. 5 PULL BOX
6 No. 6 PULL BOX
7 No. 7 (CEILING PULL BOX)
8 No. 8 (PENDANT SOFFIT PULL BOX)
9 No. 9 PULL BOX
9A No. 9A PULL BOX

(C) COMMUNICATIONS PULL BOX
(E) PULL BOX WITH EXTENSION
(S) SPRINKLER CONTROL PULL BOX
(21) ANCHOR BOLTS AND CONDUIT FOR FUTURE INSTALLATION OF TYPE 21 STANDARD
(T) TRAFFIC PULL BOX

VEHICLE DETECTORS

5 J 9 U

- VEHICLE DETECTOR DESIGNATION
- U = UPPER
  L = LOWER
- SLOT NUMBER IN INPUT FILE
- INPUT FILE (I OR J)
- PHASE

NEW	EXISTING	
		TYPE A DETECTOR LOOP. OUTLINE OF SAWCUT SHOWN
		TYPE B DETECTOR LOOP. OUTLINE OF SAWCUT SHOWN
		TYPE C DETECTOR LOOP. OUTLINE OF SAWCUT SHOWN
		TYPE D DETECTOR LOOP. OUTLINE OF SAWCUT SHOWN
		TYPE E DETECTOR LOOP. OUTLINE OF SAWCUT SHOWN
		TYPE Q DETECTOR LOOP. OUTLINE OF SAWCUT SHOWN
		MAGNETIC DETECTOR
DH	dh	DETECTOR HANDHOLE
		MICROWAVE OR VIDEO DETECTION ZONE

STATE OF CALIFORNIA
DEPARTMENT OF TRANSPORTATION

ELECTRICAL SYSTEMS (LEGEND AND ABBREVIATIONS)

NO SCALE

RSP ES-1C DATED JULY 19, 2013 SUPERSEDES STANDARD PLAN ES-1C DATED MAY 20, 2011 - PAGE 427 OF THE STANDARD PLANS BOOK DATED 2010.

REVISED STANDARD PLAN RSP ES-1C

2010 REVISED STANDARD PLAN RSP ES-1C

7-11-13

DIST	COUNTY	ROUTE	POST MILES TOTAL PROJECT	SHEET NO.	TOTAL SHEETS
08	Riv	10	R71.8/R72.3	12	38

Theresa Gabriel
REGISTERED ELECTRICAL ENGINEER

July 19, 2013
PLANS APPROVAL DATE

REGISTERED PROFESSIONAL ENGINEER Theresa Aziz Gabriel No. E15129 Exp. 6-30-14 ELECTRICAL STATE OF CALIFORNIA

THE STATE OF CALIFORNIA OR ITS OFFICERS OR AGENTS SHALL NOT BE RESPONSIBLE FOR THE ACCURACY OR COMPLETENESS OF SCANNED COPIES OF THIS PLAN SHEET.

TO ACCOMPANY PLANS DATED 11-12-13

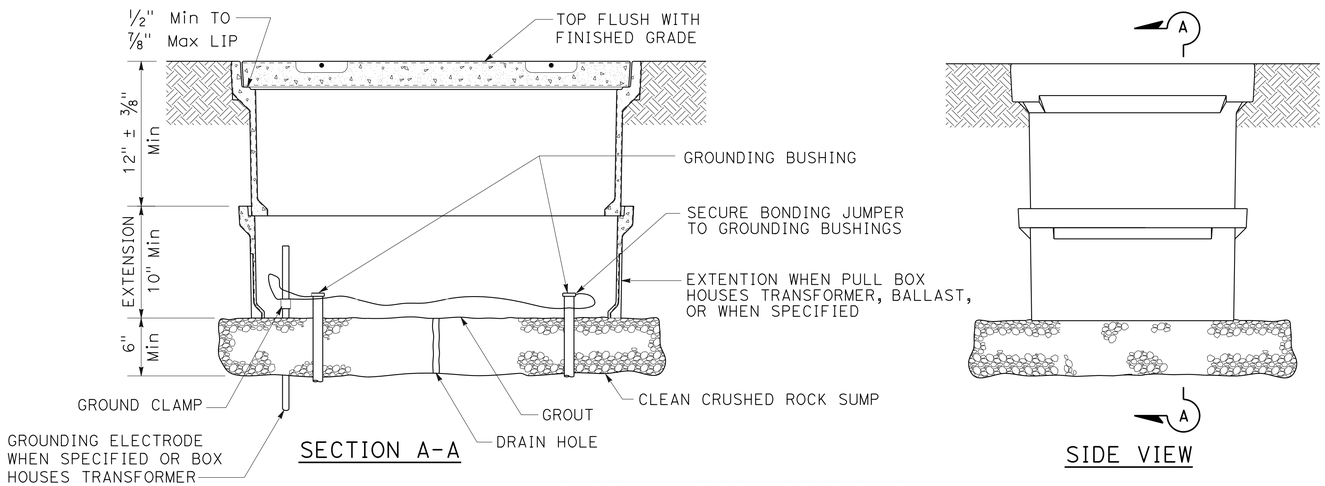

SECTION A-A

SIDE VIEW

INSTALLATION DETAILS

DETAIL A

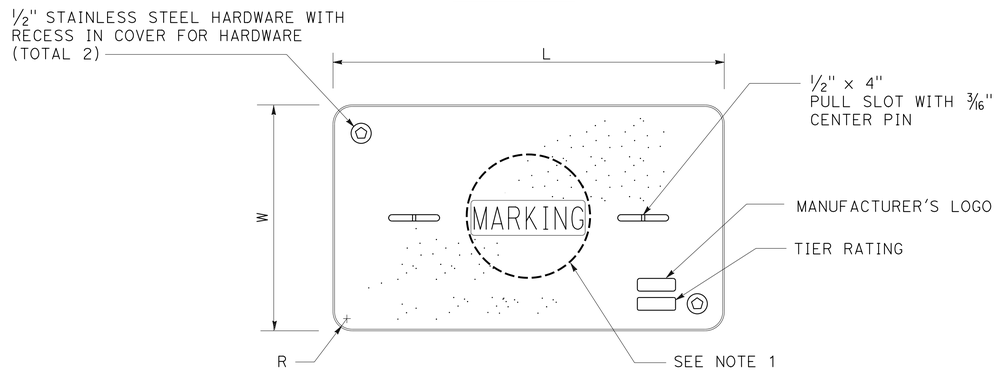

COVER TOP VIEW

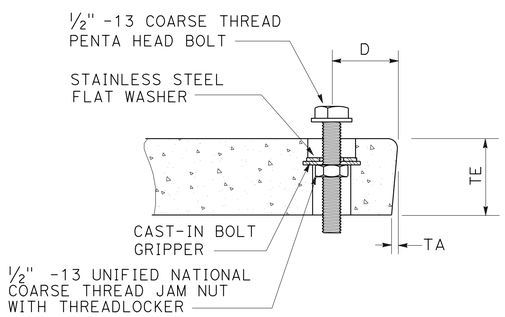

TYPICAL COVER CAPTIVE BOLT

OR SIMILAR

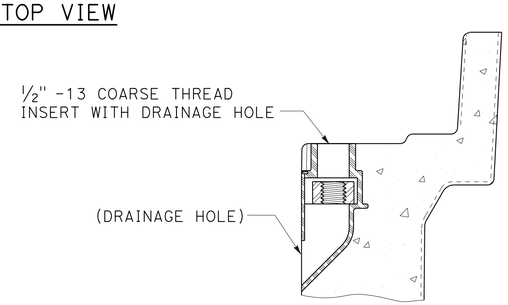

TYPICAL THREADED INSERT

OR SIMILAR

DIMENSION TABLE

PULL BOX	PULL BOX			COVER						
	MINIMUM DEPTH BOX	MINIMUM DEPTH EXTENSION	MAXIMUM WEIGHT	L	W	R	TE	TA	D	MAXIMUM WEIGHT
No. 3½	12"	N/A	40 lb	1′ - 3⅜"	10⅛"	1⅜"	2"	⅛"	1¾"	30 lb
No. 5	12"	10"	55 lb	1′ - 11¼"	1′ - 1¾"	1⅜"	2"	⅛"	1¾"	60 lb
No. 6	12"	10"	70 lb	2′ - 6½"	1′ - 5½"	1⅜"	2"	⅛"	2"	85 lb

NOTES:

1. Pull box covers shall be marked as follows: "SERVICE" Service circuits between service point and service disconnect; "SPRINKLER-CONTROL" sprinkler control circuits, 50 V or less; "CALTRANS" on all pull boxes, except pull boxes marked "SPRINKLER-CONTROL"; and "TELEPHONE" Telephone service;
   - A) No. 3½ pull box.
     - 1) "SIGNAL" - Traffic signal circuits with or without lighting or sign lighting circuits.
     - 2) "LIGHTING" - Lighting or sign lighting circuits where voltage is under 600 V.
   - B) No. 5, 6, 9 or 9A pull box.
     - 1) "TRAFFIC SIGNAL" - Traffic signal circuits with or without lighting or sign lighting circuits.
     - 2) "LIGHTING" - Lighting or sign lighting circuits where voltage is under 600 V.
     - 3) "LIGHTING-HIGH VOLTAGE" - Lighting or sign lighting circuits where voltage is above 600 V.
     - 4) "IRRIGATION" - Circuits to irrigation controller 120 V or more.
     - 5) "RAMP METER" - Ramp meter circuits.
     - 6) "COUNT STATION" - Count or speed monitor circuits.
     - 7) "COMMUNICATIONS" - Communication circuits.
     - 8) "TOS COMMUNICATIONS" - TOS communication line.
     - 9) "TOS POWER" - TOS power.
     - 10) "TDC POWER" - Telephone demarcation cabinet power.
     - 11) "CCTV" - Closed circuit television circuits.
     - 12) "TMS" - Traffic monitoring station circuits.
     - 13) "CMS" - Changeable message sign circuits.
     - 14) "HAR" - Highway advisory radio circuits.
     - 15) "BOOSTER PUMP" - Booster pump circuit.
2. The nominal dimensions of the opening in which the cover sets shall be the same as the cover dimensions except the length and width dimensions shall be ⅛" greater.
3. Covers and boxes shall be interchangeable with California standard male and female gages. When interchanged with a standard male or female gage, the top surfaces shall be flush within ⅛". Top outside radius of covers and pull boxes shall have a ⅛" radius.
4. Pull box extension may be another pull box as long as the bottom edge of the pull box can fit into the cover opening.
5. All dimensions for the cover for non-traffic pull box are nominal values.

STATE OF CALIFORNIA
DEPARTMENT OF TRANSPORTATION

ELECTRICAL SYSTEMS (NON-TRAFFIC PULL BOX)

NO SCALE

RSP ES-8A DATED JULY 19, 2013 SUPERSEDES RSP ES-8A DATED JANUARY 20, 2012 THAT SUPPLEMENTS THE STANDARD PLANS BOOK DATED 2010.

REVISED STANDARD PLAN RSP ES-8A

2010 REVISED STANDARD PLAN RSP ES-8A

7-15-13

DIST.	COUNTY	ROUTE	POST MILES TOTAL PROJECT	SHEET NO.	TOTAL SHEETS
08	Riv	10	R71.8/R72.3	13	38

Kosha K. Shah 12/03/12
REGISTERED CIVIL ENGINEER DATE

REGISTERED PROFESSIONAL ENGINEER
KOSHA K. SHAH
No. C 73864
Exp. 6/30/15
CIVIL
STATE OF CALIFORNIA

11-12-13
PLANS APPROVAL DATE

The State of California or its officers or agents shall not be responsible for the accuracy or completeness of electronic copies of this plan sheet.

INDEX OF SHEETS

SHEET No.	DESCRIPTION
	TITLE SHEET
GP-1	GENERAL PLAN
SEWER	
SS-0	NOTES, LEGEND AND ABBREVIATIONS
SS1-1	EXISTING SITE PLAN
SS-2	MODIFIED SITE PLAN
SS-3	SEPTIC TANK DETAILS
SS-4	DETAILS
SS5-1	WETLAND PLAN
SS5-2	WETLAND DETAILS
SS-6	RECIRCULATION TANK DETAILS
SS7-1	LEACHFIELD PLAN
SS7-2	LEACHFIELD AND WETLAND DETAILS
SS-8	MISCELLANEOUS DETAILS 1
SS-9	MISCELLANEOUS DETAILS 2
ELECTRICAL	
EE0-0	LEGEND
EE0-1	NOTES AND ABBREVIATIONS
EE0-2	EXISTING SITE PLAN
EE0-3	MODIFIED SITE PLAN 1
EE0-4	SEPTIC TANK AND RECIRCULATION TANK DETAILS
EE1-1	EASTBOUND-POWER PLAN 1
EE1-2	EASTBOUND-POWER PLAN 2
EE2-1	RECIRCULATION AND LEACHFIELD CONTROL STATION DETAILS 1
EE2-2	RECIRCULATION AND LEACHFIELD CONTROL STATION DETAILS 2
EE2-3	RECIRCULATION AND LEACHFIELD CONTROL STATION POWER SCHEMATIC DIAGRAM
EE2-4	RECIRCULATION AND LEACHFIELD PUMPS CONTROL STATION CONTROL SCHEMATIC DIAGRAM 1
EE2-5	RECIRCULATION AND LEACHFIELD PUMPS CONTROL STATION CONTROL SCHEMATIC DIAGRAM 2
EE2-6	RECIRCULATION AND LEACHFIELD CONTROL STATION CONTROL SCHEMATIC DIAGRAM 3

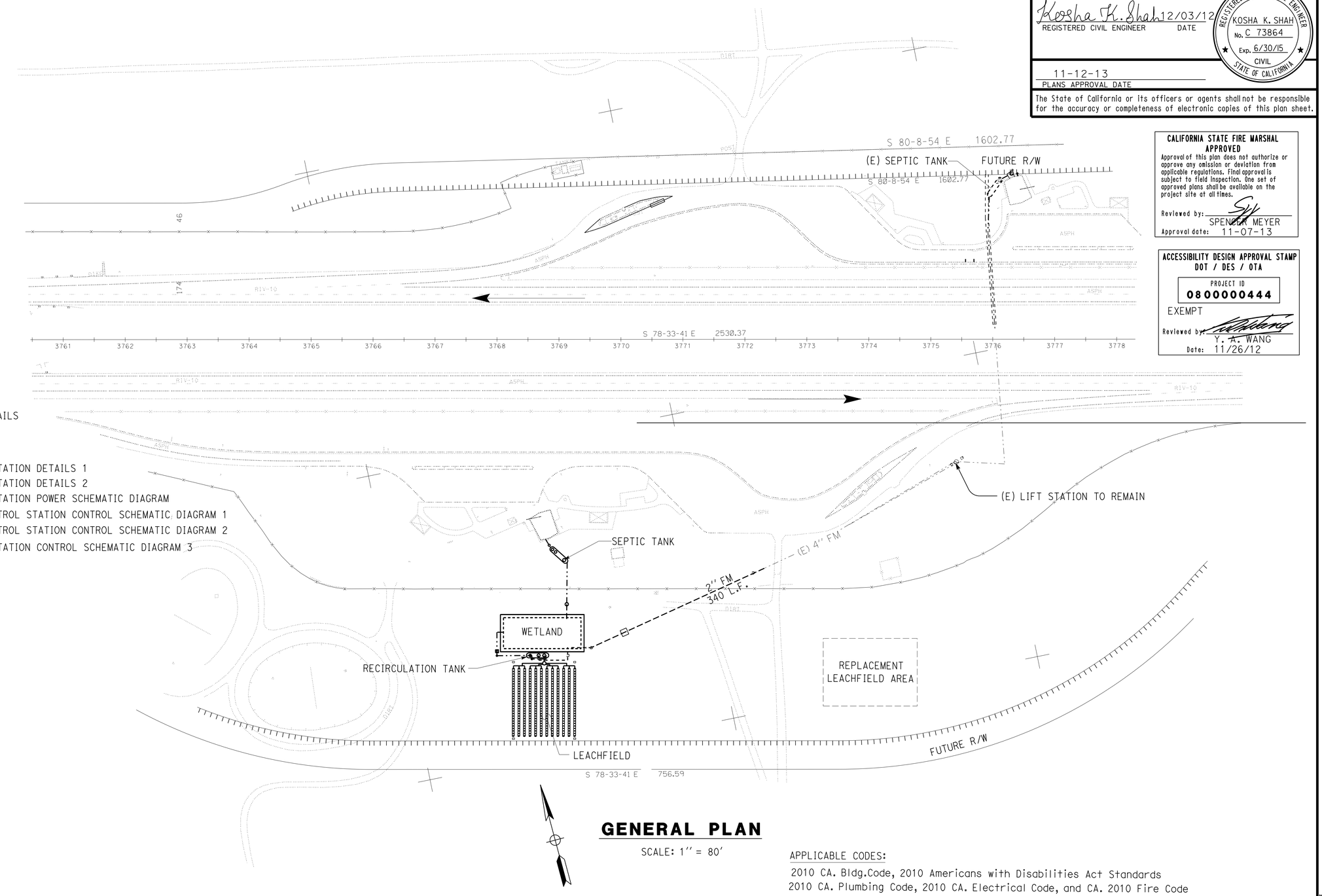

CALIFORNIA STATE FIRE MARSHAL APPROVED

Approval of this plan does not authorize or approve any omission or deviation from applicable regulations. Final approval is subject to field inspection. One set of approved plans shall be available on the project site at all times.

Reviewed by: SPENCER MEYER
Approval date: 11-07-13

ACCESSIBILITY DESIGN APPROVAL STAMP
DOT / DES / OTA

PROJECT ID
0800000444

EXEMPT

Reviewed by: Y. A. WANG
Date: 11/26/12

GENERAL PLAN

SCALE: 1" = 80'

APPLICABLE CODES:

2010 CA. Bldg.Code, 2010 Americans with Disabilities Act Standards
2010 CA. Plumbing Code, 2010 CA. Electrical Code, and CA. 2010 Fire Code

DESIGN SUPERVISOR	DESIGN	BY Kosha Shah	CHECKED Don Hansen
DESIGN ENGINEER	DETAILS	BY Kosha Shah	CHECKED Don Hansen
	QUANTITIES	BY Kosha Shah	CHECKED Don Hansen

STATE OF CALIFORNIA
DEPARTMENT OF TRANSPORTATION

DIVISION OF ENGINEERING SERVICES
ELECTRICAL-MECHANICAL-WATER AND WASTEWATER DESIGN

BRIDGE NO. 56R0003R/L
POST MILE R72.0

CACTUS CITY SAFETY ROADSIDE REST AREA WASTEWATER TREATMENT SYSTEM

GENERAL PLAN

SHEET **GP-1**

TAEMWW Imperial Rev. 7/10

ORIGINAL SCALE IN INCHES FOR REDUCED PLANS 0 1 2 3

UNIT 3616
PROJECT NUMBER & PHASE 08000004441
EA 0L9000

DISREGARD PRINTS BEARING EARLIER REVISION DATES →

REVISION DATES (PRELIMINARY STAGE ONLY)								SHEET	OF
12/20/10	2/15/11	2/25/11	4/10/11	6/8/11	6/23/11	10/18/12	12/03/12		

13-NOV-2013 09:43

gp_1.dgn

DIST.	COUNTY	ROUTE	POST MILES TOTAL PROJECT	SHEET NO.	TOTAL SHEETS
08	Riv	10	R71.8/R72.3	14	38

Kosha K. Shah 12/03/12
REGISTERED CIVIL ENGINEER DATE

REGISTERED PROFESSIONAL ENGINEER
KOSHA K. SHAH
No. C 73864
Exp. 6/30/15
CIVIL
STATE OF CALIFORNIA

11-12-13
PLANS APPROVAL DATE

The State of California or its officers or agents shall not be responsible for the accuracy or completeness of electronic copies of this plan sheet.

CALIFORNIA STATE FIRE MARSHAL APPROVED
Approval of this plan does not authorize or approve any omission or deviation from applicable regulations. Final approval is subject to field inspection. One set of approved plans shall be available on the project site at all times.
Reviewed by: SPENCER MEYER
Approval date: 11-07-13

ABBREVIATIONS:

AB	AGGREGATE BASE
AC	ASPHALT CONCRETE
B	BUNG
B.C.	BEGINING OF CURVE
BLDG	BUILDING
C	CONDUIT
C-C	CENTER TO CENTER
CFS	CUBIC FEET PER SECOND
CI	CAST IRON
CL	CHAIN LINK
CMP	CORRUGATED METAL PIPE
CO	CLEANOUT
CONC	CONCRETE
COTF	CLEANOUT TO FLOOR
COTG	CLEANOUT TO GRADE
CPLG	COUPLING
CW	COLD WATER PIPE
D	DRAIN
DBH	DIAMETER AT BREAST HEIGHT
DI	DRAIN INLET
DIA	DIAMETER
DP	DRAIN PIPE
E	ELECTRICAL
(E)	EXISTING
EA	EACH
E.C.	END OF CURVE
EL	ELEVATION
EP	EDGE OF PAVEMENT
EQ	EQUAL
FDGM	FREE DRAINING GRANULAR MATERIAL
FOB	FACE OF BUILDING
FF	FINISH FLOOR
FG	FINISH GRADE
FL	FLOW LINE
FM	FORCE MAIN
FMCO	FORCE MAIN CLEAN OUT
FOC	FACE OF CONCRETE
FS	FLOW SWITCH
FT	FEET
FTR	FLUE THROUGH ROOF
GA	GAUGE
GAC	GRANULAR ACTIVATED CARBON
GAL	GALLON
GPM	GALLONS PER MINUTE
GALV	GALVANIZED
GSP	GALVANIZED STEEL PIPE
GV	GATE VALVE
GS	GOVERNMENT SERVICE LINE
H	HEIGHT
HP	HOSE FAUCET
HF	HORSEPOWER
HZ	HERTZ
ID	INSIDE DIAMETER
IE	INVERT ELEVATION (IN FEET)
IN	INCH
JB	JUNCTION BOX
kW	KILOWATT
LB	POUND
LT	LEFT
MAX	MAXIMUM
MBV	MOTORIZED BALL VALVE
MH	MANHOLE
MIN	MINIMUM
N	NORTH
NB	NORTHBOUND
NIC	NOT IN CONTRACT
NO	NUMBER
OC	ON CENTER
OD	OUTSIDE DIAMETER
OG	ORIGINAL GROUND
P	PITCH
PCC	PORTLAND CEMENT CONCRETE
PH	PHASE
PRV	PRESSURE REDUCING VALVE
PVC	POLYVINYL CHLORIDE
R	RADIUS
R.P.	RADIUS POINT
RCP	REINFORCED CONCRETE PIPE
REQ	REQUIRED
rpm	REVOLUTIONS PER MINUTE
RPBP	REDUCED PRESSURE BACKFLOW PREVENTER
RPU	RECYCLE PROCESS UNIT
RT	RIGHT
R/W	RIGHT-OF-WAY
S	SLOPE
SB	SOUTHBOUND
SCH	SCHEDULE
SD	STORM DRAIN
SP	SEWER PIPE
SQ	SQUARE
STA	STATION
STD	STANDARD
TBM	TEMPORARY BENCH MARK
TOC	TOP OF CONCRETE
TOT	TOTAL
TYP	TYPICAL
VAC	VOLTS AC
VCP	VITRIFIED CLAY PIPE
W	WATER
W/O	WITHOUT
WP	WATER PIPE
WSP	WELDED STEEL PIPE
EB	EAST BOUND
WB	WEST BOUND

LEGEND:

X	FENCE
	SURFACE DRAINAGE
	ABANDON
S	SANITARY SEWER
D	DRAIN
RD	RETURN DRAIN
V	VENT
W	WATER
FM	FORCE MAIN
L	LEACH LINES
X %	SLOPE OF PIPE
7 / SS-5	DETAIL / SHEET NUMBER
99.00	NEW GRADE IN FEET
X (100.00)	EXISTING SPOT GRADE IN FEET
	SURFACE DRAINAGE
	ABANDON
	BENCHMARK ELEVATION
℄	CENTERLINE
Ø	DIAMETER
	SECTION / ELEVATION LETTER / SHEET NUMBER
	TREE
	DIRECTION OF TRAFFIC

GENERAL WORK NOTES:

The Contractor shall verify all controlling field dimensions and conditions before ordering or fabricating any materials.

The Contractor shall verify exact location of all underground facilities and utilities prior to start of construction.

No 90 degree bends allowed on drain or sewer pipe. Where 90 degree bends are shown, use two 45 degree bends

PIPE FITTINGS AND VALVES

MH	MANHOLE
	FORCE MAIN CLEAN OUT
	CLEAN OUT TO GRADE
	CAP
	ELBOW, TURNED DOWN
	FLEXIBLE CONNECTOR
	REDUCER, CONCENTRIC
	REDUCER, ECCENTRIC
	PRESSURE GAUGE (WITH VALVE AND SNUBBER)
	UNION
	UNION, INSULATING
	VALVE, BALL
	VALVE, CHECK
	VALVE, GATE
	VALVE, SAFETY RELIEF
	VALVE, PRESSURE REDUCING
HF	HOSE FAUCET
	ORIFICE SHIELD LOCATION
	2'' ABSORPTION CHAMBER PRESSURE CLEANOUT

	BY	CHECKED
DESIGN	Kosha Shah	Don Hansen
DETAILS	Kosha Shah	Don Hansen
QUANTITIES	Kosha Shah	Don Hansen

STATE OF CALIFORNIA
DEPARTMENT OF TRANSPORTATION

DIVISION OF ENGINEERING SERVICES
ELECTRICAL-MECHANICAL-WATER AND WASTEWATER DESIGN

BRIDGE NO. 56R0003R/L
POST MILE R72.0

CACTUS CITY SAFETY ROADSIDE REST AREA WASTEWATER TREATMENT SYSTEM

NOTES, LEGEND & ABBREVIATIONS

SHEET **SS-0**

TAEMWW Imperial Rev. 7/10

ORIGINAL SCALE IN INCHES FOR REDUCED PLANS 0 1 2 3

UNIT 3616
PROJECT NUMBER & PHASE 08000004441
EA 0L9000

DISREGARD PRINTS BEARING EARLIER REVISION DATES →
REVISION DATES (PRELIMINARY STAGE ONLY): 12/20/10 2/15/11 2/25/11 4/10/11 6/8/11 6/23/11 10/18/12 12/03/12

SHEET OF

13-NOV-2013 09:43
ss_0.dgn

DIST.	COUNTY	ROUTE	POST MILES TOTAL PROJECT	SHEET NO.	TOTAL SHEETS
08	Riv	10	R71.8/R72.3	15	38

Kosha K. Shah 12/03/12
REGISTERED CIVIL ENGINEER DATE

REGISTERED PROFESSIONAL ENGINEER
KOSHA K. SHAH
No. C 73864
Exp. 6/30/15
CIVIL
STATE OF CALIFORNIA

11-12-13
PLANS APPROVAL DATE

The State of California or its officers or agents shall not be responsible for the accuracy or completeness of electronic copies of this plan sheet.

CALIFORNIA STATE FIRE MARSHAL APPROVED
Approval of this plan does not authorize or approve any omission or deviation from applicable regulations. Final approval is subject to field inspection. One set of approved plans shall be available on the project site at all times.
Reviewed by: SPENCER MEYER
Approval date: 11-07-13

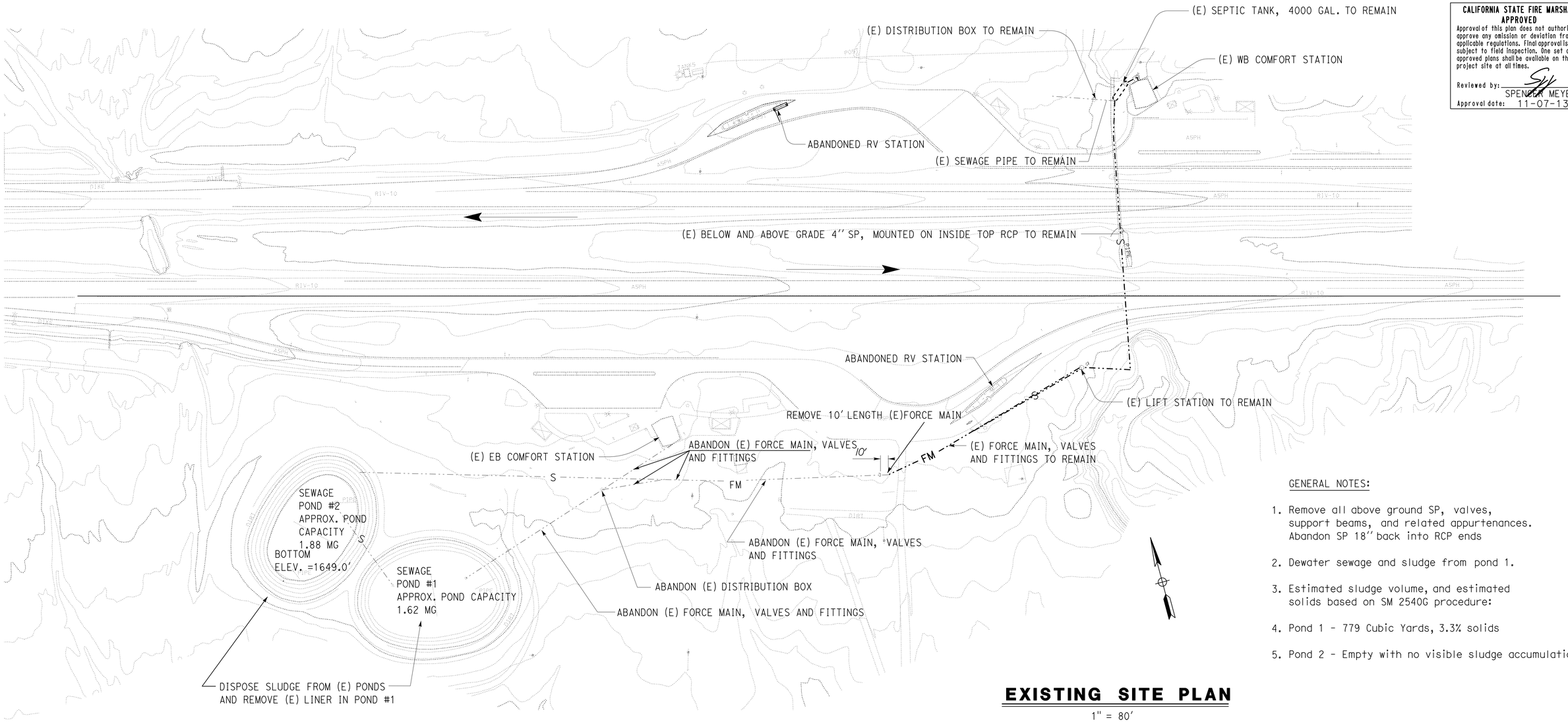

GENERAL NOTES:

1. Remove all above ground SP, valves, support beams, and related appurtenances. Abandon SP 18'' back into RCP ends
2. Dewater sewage and sludge from pond 1.
3. Estimated sludge volume, and estimated solids based on SM 2540G procedure:
4. Pond 1 - 779 Cubic Yards, 3.3% solids
5. Pond 2 - Empty with no visible sludge accumulation

EXISTING SITE PLAN

1" = 80'

DESIGN	BY Kosha Shah	CHECKED Don Hansen	
DETAILS	BY Kosha Shah	CHECKED Don Hansen	
QUANTITIES	BY Kosha Shah	CHECKED Don Hansen	

STATE OF CALIFORNIA
DEPARTMENT OF TRANSPORTATION

DIVISION OF ENGINEERING SERVICES
ELECTRICAL-MECHANICAL-WATER AND WASTEWATER DESIGN

BRIDGE NO. 56R0003R/L
POST MILE R72.0

CACTUS CITY SAFETY ROADSIDE REST AREA WASTEWATER TREATMENT SYSTEM

EXISTING SITE PLAN

SHEET SS1-1

TAEMWW Imperial Rev. 7/10

ORIGINAL SCALE IN INCHES FOR REDUCED PLANS 0 1 2 3

UNIT 3616
PROJECT NUMBER & PHASE 08000004441
EA 0L9000

DISREGARD PRINTS BEARING EARLIER REVISION DATES →
REVISION DATES (PRELIMINARY STAGE ONLY) 12/20/10 2/15/11 2/25/11 4/10/11 6/8/11 6/23/11 10/18/12 12/03/12
SHEET OF

13-NOV-2013 09:43
ss_01_1.dgn

DIST.	COUNTY	ROUTE	POST MILES TOTAL PROJECT	SHEET NO.	TOTAL SHEETS
08	Riv	10	R71.8/R72.3	16	38

Kosha K. Shah 12-03-12
REGISTERED CIVIL ENGINEER DATE

REGISTERED PROFESSIONAL ENGINEER
KOSHA K. SHAH
No. C 73864
Exp. 6/30/15
CIVIL
STATE OF CALIFORNIA

11-12-13
PLANS APPROVAL DATE

The State of California or its officers or agents shall not be responsible for the accuracy or completeness of electronic copies of this plan sheet.

CALIFORNIA STATE FIRE MARSHAL APPROVED
Approval of this plan does not authorize or approve any omission or deviation from applicable regulations. Final approval is subject to field inspection. One set of approved plans shall be available on the project site at all times.
Reviewed by: SM
SPENCER MEYER
Approval date: 11-07-13

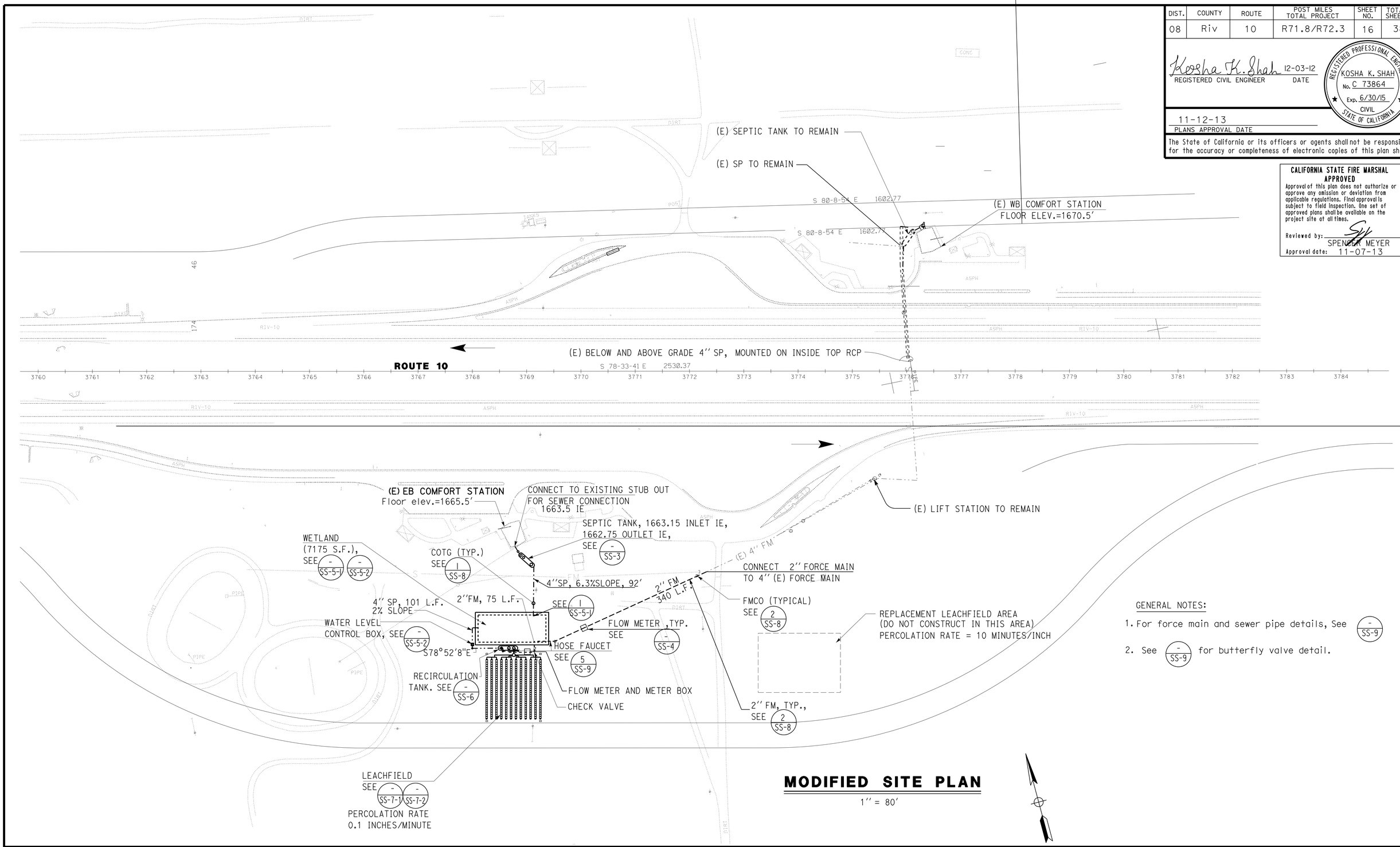

GENERAL NOTES:

1. For force main and sewer pipe details, See - SS-9
2. See - SS-9 for butterfly valve detail.

MODIFIED SITE PLAN

1'' = 80'

	BY	CHECKED
DESIGN	Kosha Shah	Don Hansen
DETAILS	Kosha Shah	Don Hansen
QUANTITIES	Kosha Shah	Don Hansen

STATE OF CALIFORNIA
DEPARTMENT OF TRANSPORTATION

DIVISION OF ENGINEERING SERVICES
ELECTRICAL-MECHANICAL-WATER AND WASTEWATER DESIGN

BRIDGE NO. 56R0003R/L
POST MILE R72.0

CACTUS CITY SAFETY ROADSIDE REST AREA WASTEWATER TREATMENT SYSTEM

MODIFIED SITE PLAN

SHEET **SS-2**

TAEMWW Imperial Rev. 7/10

ORIGINAL SCALE IN INCHES FOR REDUCED PLANS 0 1 2 3

UNIT 3616
PROJECT NUMBER & PHASE 08000004441
EA 0L9000

DISREGARD PRINTS BEARING EARLIER REVISION DATES → 12/20/10 2/15/11 2/25/11 4/10/11 6/8/11 6/23/11 10/31/11 10/18/12 12/03/12

REVISION DATES (PRELIMINARY STAGE ONLY) SHEET OF

13-NOV-2013 09:44
ss_02.dgn

DIST.	COUNTY	ROUTE	POST MILES TOTAL PROJECT	SHEET NO.	TOTAL SHEETS
08	Riv	10	R71.8/R72.3	17	38

Kosha K. Shah 12/03/12
REGISTERED CIVIL ENGINEER DATE

REGISTERED PROFESSIONAL ENGINEER
KOSHA K. SHAH
No. C 73864
Exp. 6/30/15
CIVIL
STATE OF CALIFORNIA

11-12-13
PLANS APPROVAL DATE

The State of California or its officers or agents shall not be responsible for the accuracy or completeness of electronic copies of this plan sheet.

CALIFORNIA STATE FIRE MARSHAL APPROVED
Approval of this plan does not authorize or approve any omission or deviation from applicable regulations. Final approval is subject to field inspection. One set of approved plans shall be available on the project site at all times.
Reviewed by: SPENCER MEYER
Approval date: 11-07-13

GENERAL NOTES:

1. Deadman dimensions may vary by manufacturer. Install deadman per septic tank manufacturer's recommendations.
2. Baffles shall be installed at locations to divide tank volume into approximate 5,000 gallons for the Inlet Compartment, 2,500 gallons for the second and 2,500 gallons for the third compartment. Lengths may vary by the manufacturer. Volume is approximate. Bedding thickness and depth per manufacturer's recommendations.
3. Install four guard posts on each long side of septic tank for protection.
4. Coil 6 feet of level transducer cable and tie up with copper wire in 1 feet radius loop inside manhole for level transducer. Control wiring by electrician.

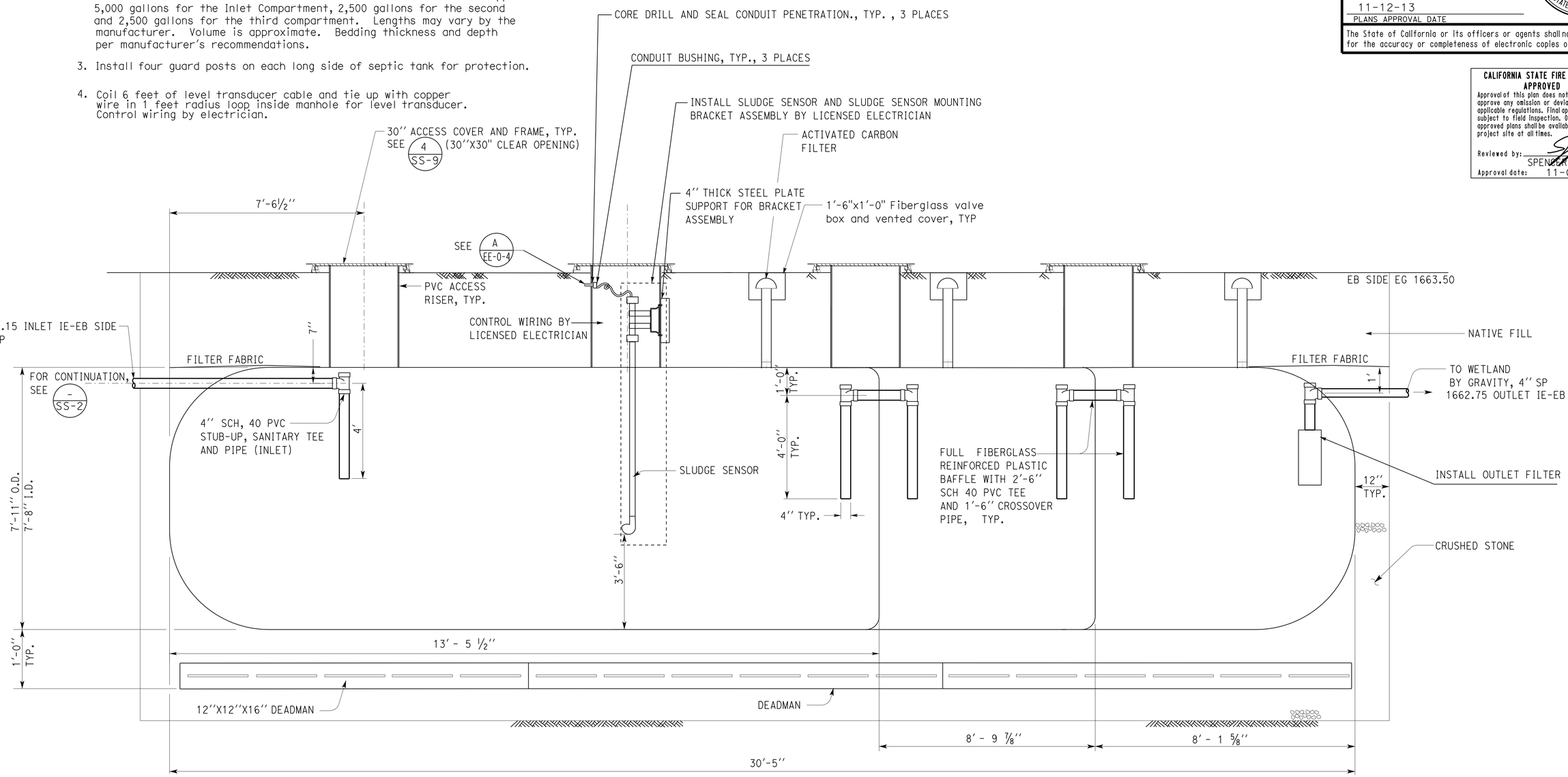

10,000 GALLON SEPTIC TANK

NO SCALE

	BY	CHECKED
DESIGN	Kosha Shah	Don Hansen
DETAILS	Kosha Shah	Don Hansen
QUANTITIES	Kosha Shah	Jerry Marcotte

STATE OF CALIFORNIA
DEPARTMENT OF TRANSPORTATION

DIVISION OF ENGINEERING SERVICES
ELECTRICAL-MECHANICAL-WATER AND WASTEWATER DESIGN

BRIDGE NO. 56R0003R/L
POST MILE R72.0

CACTUS CITY SAFETY ROADSIDE REST AREA WASTEWATER TREATMENT SYSTEM

SEPTIC TANK DETAILS

SHEET **SS-3**

TAEMWW Imperial Rev. 7/10

ORIGINAL SCALE IN INCHES FOR REDUCED PLANS 0 1 2 3

UNIT 3616
PROJECT NUMBER & PHASE 08000004441
EA 0L9000

DISREGARD PRINTS BEARING EARLIER REVISION DATES

REVISION DATES (PRELIMINARY STAGE ONLY)								SHEET	OF
12/20/10	2/15/11	2/25/11	4/10/11	6/8/11	6/23/11	6/23/11	10/18/12	12/03/12		

13-NOV-2013 09:44
ss_03.dgn

DIST.	COUNTY	ROUTE	POST MILES TOTAL PROJECT	SHEET NO.	TOTAL SHEETS
08	Riv	10	R71.8/R72.3	18	38

Kosha K. Shah 12/03/12
REGISTERED CIVIL ENGINEER DATE

REGISTERED PROFESSIONAL ENGINEER
KOSHA K. SHAH
No. C 73864
Exp. 6/30/15
CIVIL
STATE OF CALIFORNIA

11-12-13
PLANS APPROVAL DATE

The State of California or its officers or agents shall not be responsible for the accuracy or completeness of electronic copies of this plan sheet.

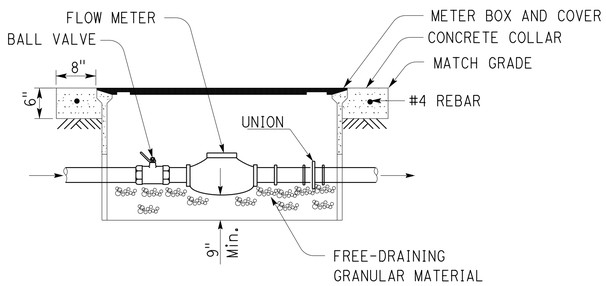

2 FLOW METER

NO SCALE

NOTE:
Min. 9" clearance on all sides

CALIFORNIA STATE FIRE MARSHAL APPROVED
Approval of this plan does not authorize or approve any omission or deviation from applicable regulations. Final approval is subject to field inspection. One set of approved plans shall be available on the project site at all times.
Reviewed by: SPENCER MEYER
Approval date: 11-07-13

DESIGN	BY Kosha Shah	CHECKED Don Hansen	
DETAILS	BY Kosha Shah	CHECKED Don Hansen	
QUANTITIES	BY Kosha Shah	CHECKED Don Hansen	

STATE OF CALIFORNIA
DEPARTMENT OF TRANSPORTATION

DIVISION OF ENGINEERING SERVICES
ELECTRICAL-MECHANICAL-WATER AND WASTEWATER DESIGN

BRIDGE NO. 56R0003R/L
POST MILE R72.0

CACTUS CITY SAFETY ROADSIDE REST AREA WASTEWATER TREATMENT SYSTEM

DETAILS

SHEET SS-4

TAEMWW Imperial Rev. 7/10

ORIGINAL SCALE IN INCHES FOR REDUCED PLANS 0 1 2 3

UNIT 3616
PROJECT NUMBER & PHASE 08000004441
EA 0L9000

DISREGARD PRINTS BEARING EARLIER REVISION DATES →
REVISION DATES (PRELIMINARY STAGE ONLY): 12/20/10 2/15/11 2/25/11 4/10/11 6/8/11 6/23/11 10/18/12 12/03/12

SHEET OF

13-NOV-2013 09:44
ss_04.dgn

DIST.	COUNTY	ROUTE	POST MILES TOTAL PROJECT	SHEET NO.	TOTAL SHEETS
08	Riv	10	R71.8/R72.3	19	38

Kosha K. Shah 12/03/12
REGISTERED CIVIL ENGINEER DATE

REGISTERED PROFESSIONAL ENGINEER
KOSHA K. SHAH
No. C 73864
Exp. 6/30/15
CIVIL
STATE OF CALIFORNIA

11-12-13
PLANS APPROVAL DATE

The State of California or its officers or agents shall not be responsible for the accuracy or completeness of electronic copies of this plan sheet.

CALIFORNIA STATE FIRE MARSHAL APPROVED
Approval of this plan does not authorize or approve any omission or deviation from applicable regulations. Final approval is subject to field inspection. One set of approved plans shall be available on the project site at all times.
Reviewed by: SPENCER MEYER
Approval date: 11-07-13

GENERAL NOTE:

1. The size orifice drilled in pipe shall be 1/8"" diameter.

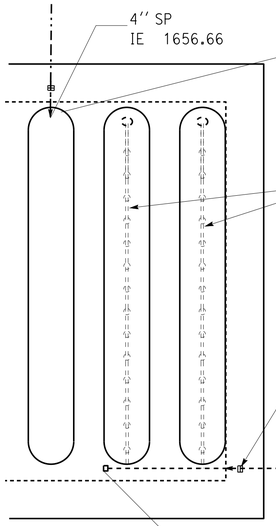

DETAIL 1

1'' = 10'

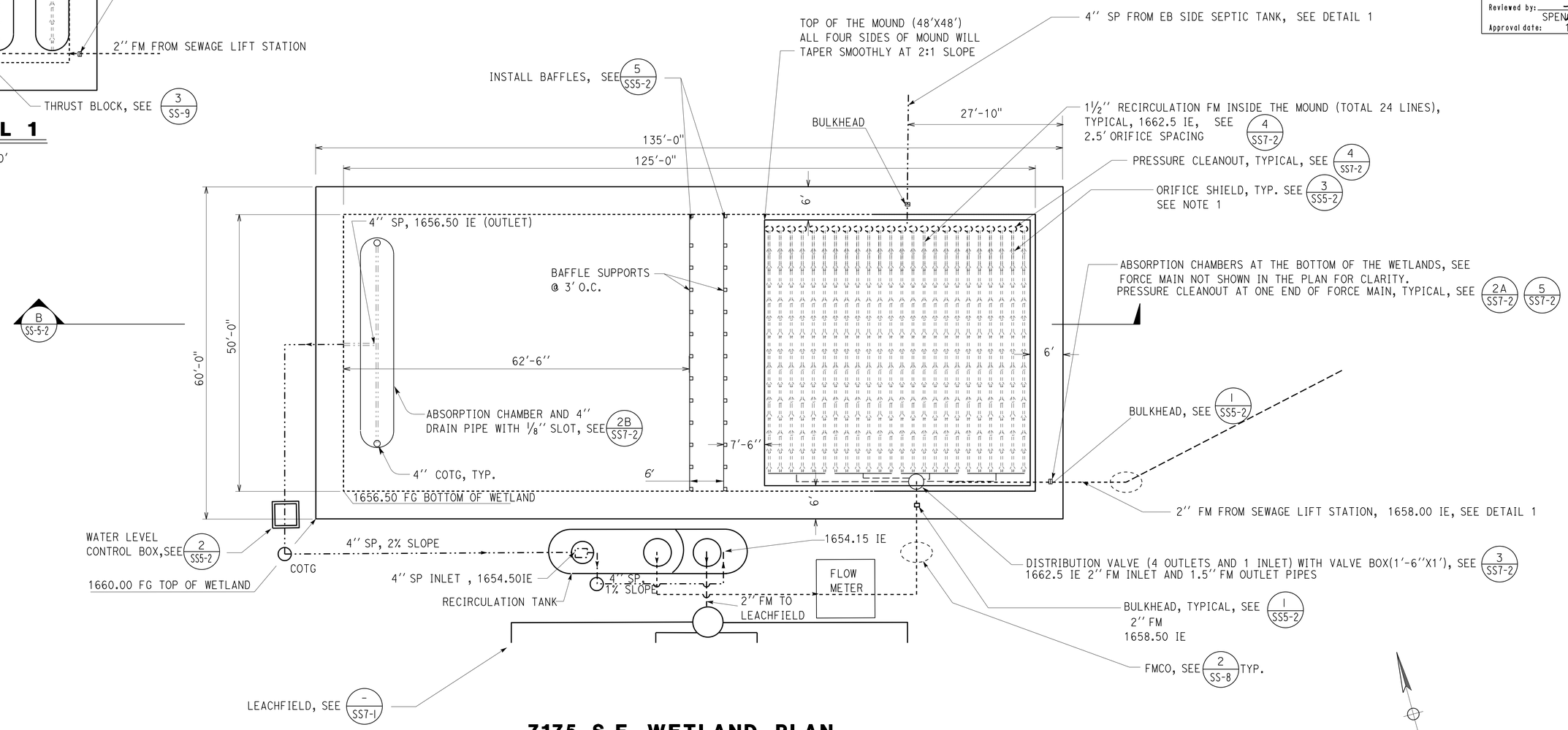

7175 S.F. WETLAND PLAN

1'' = 10'

DESIGN	BY Kosha Shah	CHECKED Don Hansen	
DETAILS	BY Kosha Shah	CHECKED Don Hansen	
QUANTITIES	BY Kosha Shah	CHECKED Don Hansen	

STATE OF CALIFORNIA
DEPARTMENT OF TRANSPORTATION

DIVISION OF ENGINEERING SERVICES
ELECTRICAL-MECHANICAL-WATER AND WASTEWATER DESIGN

BRIDGE NO. 56R0003R/L
POST MILE R72.0

CACTUS CITY SAFETY ROADSIDE REST AREA WASTEWATER TREATMENT SYSTEM

WETLAND PLAN

SHEET **SS5-1**

TAEMWW Imperial Rev. 7/10

ORIGINAL SCALE IN INCHES FOR REDUCED PLANS 0 1 2 3

UNIT 3616
PROJECT NUMBER & PHASE 08000004441
EA 0L9000

DISREGARD PRINTS BEARING EARLIER REVISION DATES → 12/20/10 2/15/11 2/25/11 4/10/11 6/8/11 6/23/11 10/18/12 12/03/12

REVISION DATES (PRELIMINARY STAGE ONLY) SHEET OF

13-NOV-2013 09:44
ss_05_1.dgn

DIST.	COUNTY	ROUTE	POST MILES TOTAL PROJECT	SHEET NO.	TOTAL SHEETS
08	Riv	10	R71.8/R72.3	20	38

Kosha K. Shah 12/03/12
REGISTERED CIVIL ENGINEER DATE

REGISTERED PROFESSIONAL ENGINEER KOSHA K. SHAH No. C 73864 Exp. 6/30/15 CIVIL STATE OF CALIFORNIA

11-12-13
PLANS APPROVAL DATE

The State of California or its officers or agents shall not be responsible for the accuracy or completeness of electronic copies of this plan sheet.

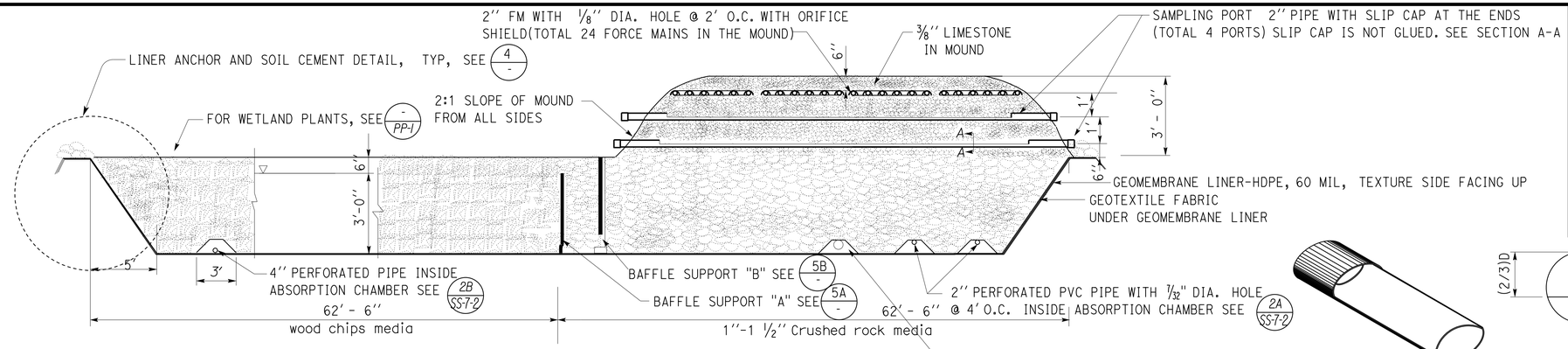

B SECTION
NO SCALE

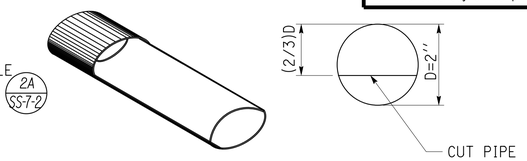

SECTION A-A
NO SCALE

CALIFORNIA STATE FIRE MARSHAL APPROVED
Approval of this plan does not authorize or approve any omission or deviation from applicable regulations. Final approval is subject to field inspection. One set of approved plans shall be available on the project site at all times.
Reviewed by: SPENCER MEYER
Approval date: 11-07-13

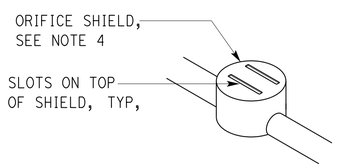

3 SLOTTED ORIFICE SHIELD
NO SCALE

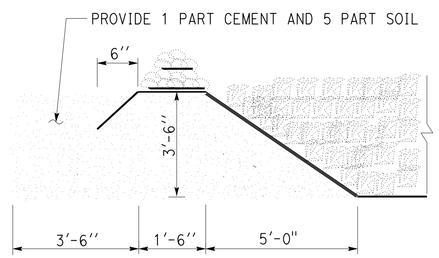

4 LINER ANCHOR SOIL CEMENT DETAIL
NO SCALE

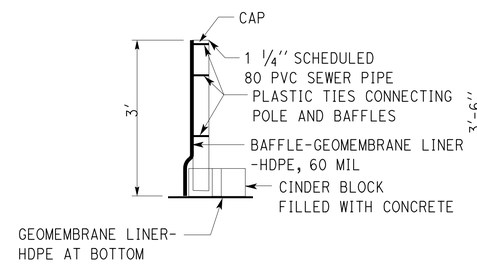

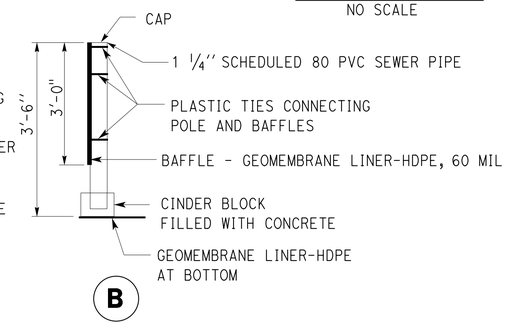

5 BAFFLE SUPPORT DETAIL
NO SCALE

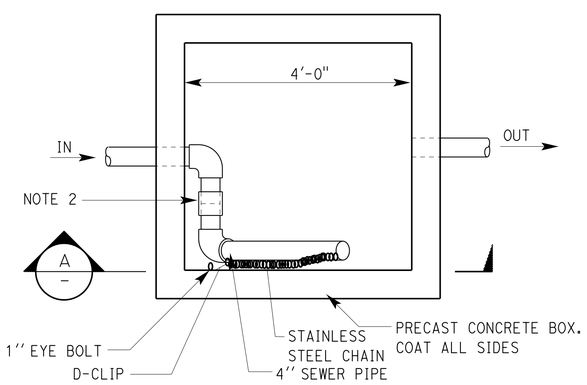

PLAN

2 WATER LEVEL CONTROL BOX
NO SCALE

GENERAL NOTES:

1. Water level control box chain. Attach to eye in wall with "S" hook. Pipe to rotate 90° supported by chain.
2. Slip joint (two). Glue upstream end only so outlet may rotate.
3. The size orifice drilled in the pipe shall be 1/8'' diameter.
4. The orifice shields may vary according to manufacturer.
5. Install sampling port under recirculation pipe orifice.

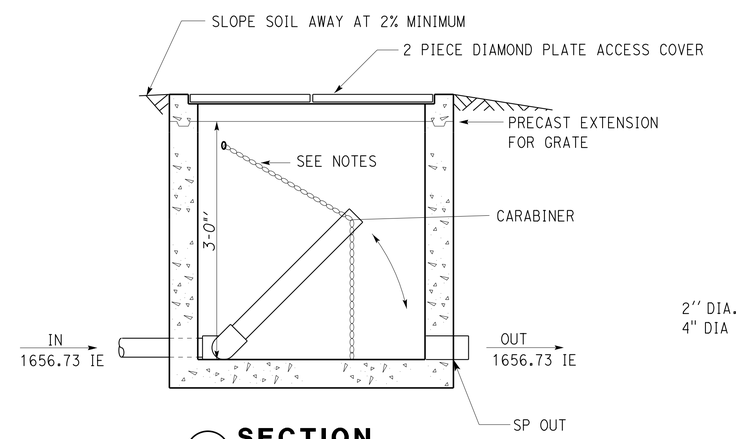

A SECTION
NO SCALE

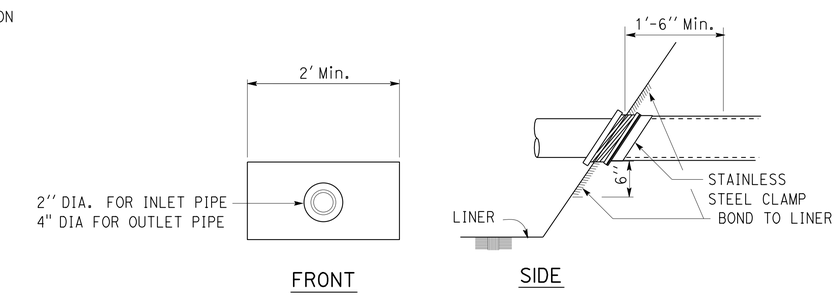

1 BULK HEAD DETAIL
NO SCALE

DESIGN	BY Kosha Shah	CHECKED Don Hansen	
DETAILS	BY Kosha Shah	CHECKED Don Hansen	
QUANTITIES	BY Kosha Shah	CHECKED Don Hansen	

STATE OF CALIFORNIA
DEPARTMENT OF TRANSPORTATION

DIVISION OF ENGINEERING SERVICES
ELECTRICAL-MECHANICAL-WATER AND WASTEWATER DESIGN

BRIDGE NO. 56R0003R/L
POST MILE R72.0

CACTUS CITY SAFETY ROADSIDE REST AREA WASTEWATER TREATMENT SYSTEM

WETLAND DETAILS

SHEET SS5-2

TAEMWW Imperial Rev. 7/10

ORIGINAL SCALE IN INCHES FOR REDUCED PLANS 0 1 2 3

UNIT 3616
PROJECT NUMBER & PHASE 08000004441
EA 0L9000

DISREGARD PRINTS BEARING EARLIER REVISION DATES →
REVISION DATES (PRELIMINARY STAGE ONLY) 12/20/10 2/15/11 2/25/11 4/10/11 6/8/11 6/23/11 10/18/12 12/03/12
SHEET OF

13-NOV-2013 09:44
ss_05_2.dgn

DIST.	COUNTY	ROUTE	POST MILES TOTAL PROJECT	SHEET NO.	TOTAL SHEETS
08	Riv	10	R71.8/R72.3	21	38

Kosha K. Shah 12/03/12
REGISTERED CIVIL ENGINEER DATE

REGISTERED PROFESSIONAL ENGINEER
KOSHA K. SHAH
No. C 73864
Exp. 6/30/15
CIVIL
STATE OF CALIFORNIA

11-12-13
PLANS APPROVAL DATE

The State of California or its officers or agents shall not be responsible for the accuracy or completeness of electronic copies of this plan sheet.

EQUIPMENT SCHEDULE FOR SEWAGE PUMPS 1 & 2						
EQUIPMENT	PUMPING RATE (GPM)	TOTAL DYNAMIC HEAD (FT)	SPEED (RPM)	HP	VOLTS	PHASE
RECIRCULATION PUMP (NO. 1 & 2) 300 CYCLES/DAY	48 50 52	62 60 58	3450 (Max)	3/4	230	1
LEACHFIELD PUMP (NO. 1 & 2)	48 50 52	75 72.5 70	3450 (Max)	1	230	1

GENERAL NOTES:

1. Deadman dimensions may vary by manufacturer. Install deadman per septic tank manufacturer's recommendations.
2. High level alarm "ON" at 4'' below inside top of tank.
   Recirculation pumps will be operated on timed dosing.
   Dosing will start every 7.5 minutes and lead pump will run for 2.6 minutes.
   Recirculation lead pump and lag pump will alternate at each dosing.
   Recirculation pump "OFF" float switch at 5'-4'' below inside top of the tank.
   Low level alarm "ON" float switch at 5'-2'' below inside top of tank.
3. Bedding thickness and depth per manufacturer's recommendation.
4. Pump piping and electrical lines are skewed in the section view for clarity.
5. Install ball float valve at 6 feet from bottom Id of tank with ball in the seated position.
6. Level transducer water level elevations for leachfield pump:
   High level alarm "ON" at 8'' below inside top of tank.
   Leachfield lag pump "ON" at 16'' below inside top of tank.
   Leachfield lead pump "ON" at 3'-4'' below inside top of tank
   Leachfield lead pump and lag pump "OFF" at 4'-10'' below inside top of tank
   Low level alarm "ON" at 5'-2'' below inside top of tank.

   Leachfield float switches water level elevations for leachfield pump:
   High level alarm "ON" at 8'' below inside top of tank.
   Low level alarm "ON" and pumps shut off at 5'-2'' below inside top of tank.
7. Coil additional 10 feet of fiber optic float switch cables and tie up with copper wire in 1 feet radius loop inside manhole for pumps. Coil additional 6 feet of motor power and control cables and tie up with copper wire in 1 feet radius loop inside manhole for pumps. Coil 6 feet of level transducer cable and tie up with copper wire in 1 feet radius loop with integral breather tube inside valve box for level transducer. Control wiring by electrician.

CALIFORNIA STATE FIRE MARSHAL APPROVED
Approval of this plan does not authorize or approve any omission or deviation from applicable regulations. Final approval is subject to field inspection. One set of approved plans shall be available on the project site at all times.
Reviewed by: SPENCER MEYER
Approval date: 11-07-13

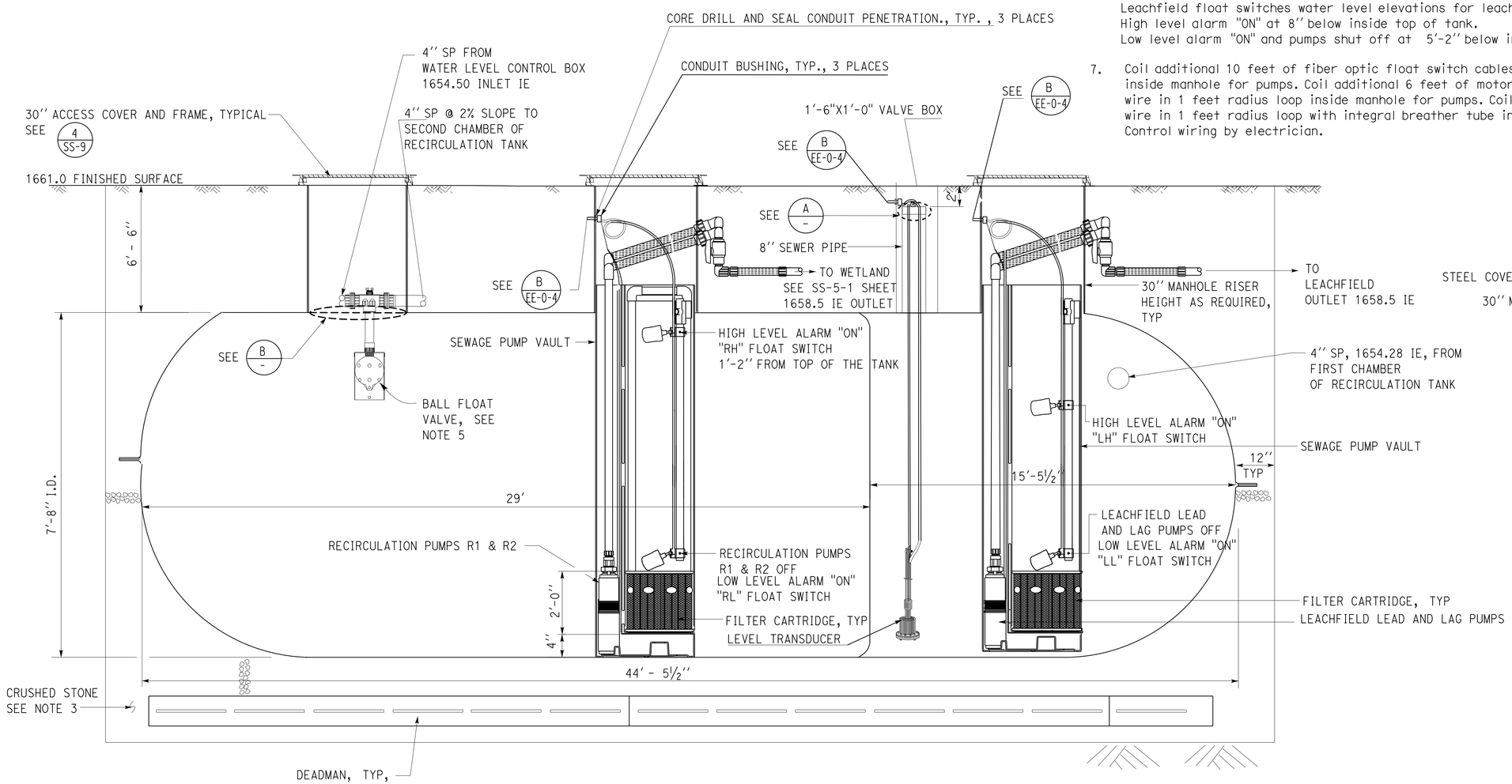

RECIRCULATION TANK - 15000 GALLON
NO SCALE

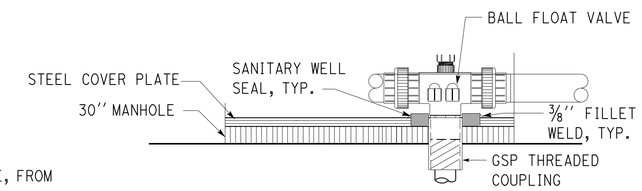

B DETAIL
NO SCALE

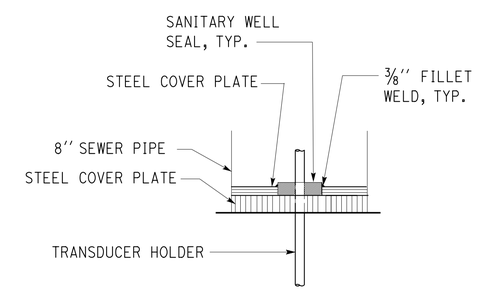

A DETAIL
NO SCALE

	BY	CHECKED
DESIGN	Kosha Shah	Don Hansen
DETAILS	Kosha Shah	Don Hansen
QUANTITIES	Kosha Shah	Don Hansen

STATE OF CALIFORNIA
DEPARTMENT OF TRANSPORTATION

DIVISION OF ENGINEERING SERVICES
ELECTRICAL-MECHANICAL-WATER AND WASTEWATER DESIGN

BRIDGE NO. 56R0003R/L
POST MILE R72.0

CACTUS CITY SAFETY ROADSIDE REST AREA WASTEWATER TREATMENT SYSTEM
RECIRCULATION TANK DETAILS

SHEET **SS-6**

TAEMWW Imperial Rev. 7/10

ORIGINAL SCALE IN INCHES FOR REDUCED PLANS 0 1 2 3

UNIT 3616
PROJECT NUMBER & PHASE 08000004441
EA 0L9000

DISREGARD PRINTS BEARING EARLIER REVISION DATES
REVISION DATES (PRELIMINARY STAGE ONLY): 12/20/10 2/15/11 2/25/11 4/10/11 6/8/11 6/23/11 10/18/12 12/03/12
SHEET OF

13-NOV-2013 09:44
ss_06.dgn

DIST.	COUNTY	ROUTE	POST MILES TOTAL PROJECT	SHEET NO.	TOTAL SHEETS
08	Riv	10	R71.8/R72.3	22	38

Kosha K. Shah 12/03/12
REGISTERED CIVIL ENGINEER DATE

REGISTERED PROFESSIONAL ENGINEER
KOSHA K. SHAH
No. C 73864
Exp. 6/30/15
CIVIL
STATE OF CALIFORNIA

11-12-13
PLANS APPROVAL DATE

The State of California or its officers or agents shall not be responsible for the accuracy or completeness of electronic copies of this plan sheet.

CALIFORNIA STATE FIRE MARSHAL APPROVED
Approval of this plan does not authorize or approve any omission or deviation from applicable regulations. Final approval is subject to field inspection. One set of approved plans shall be available on the project site at all times.
Reviewed by: SPENCER MEYER
Approval date: 11-07-13

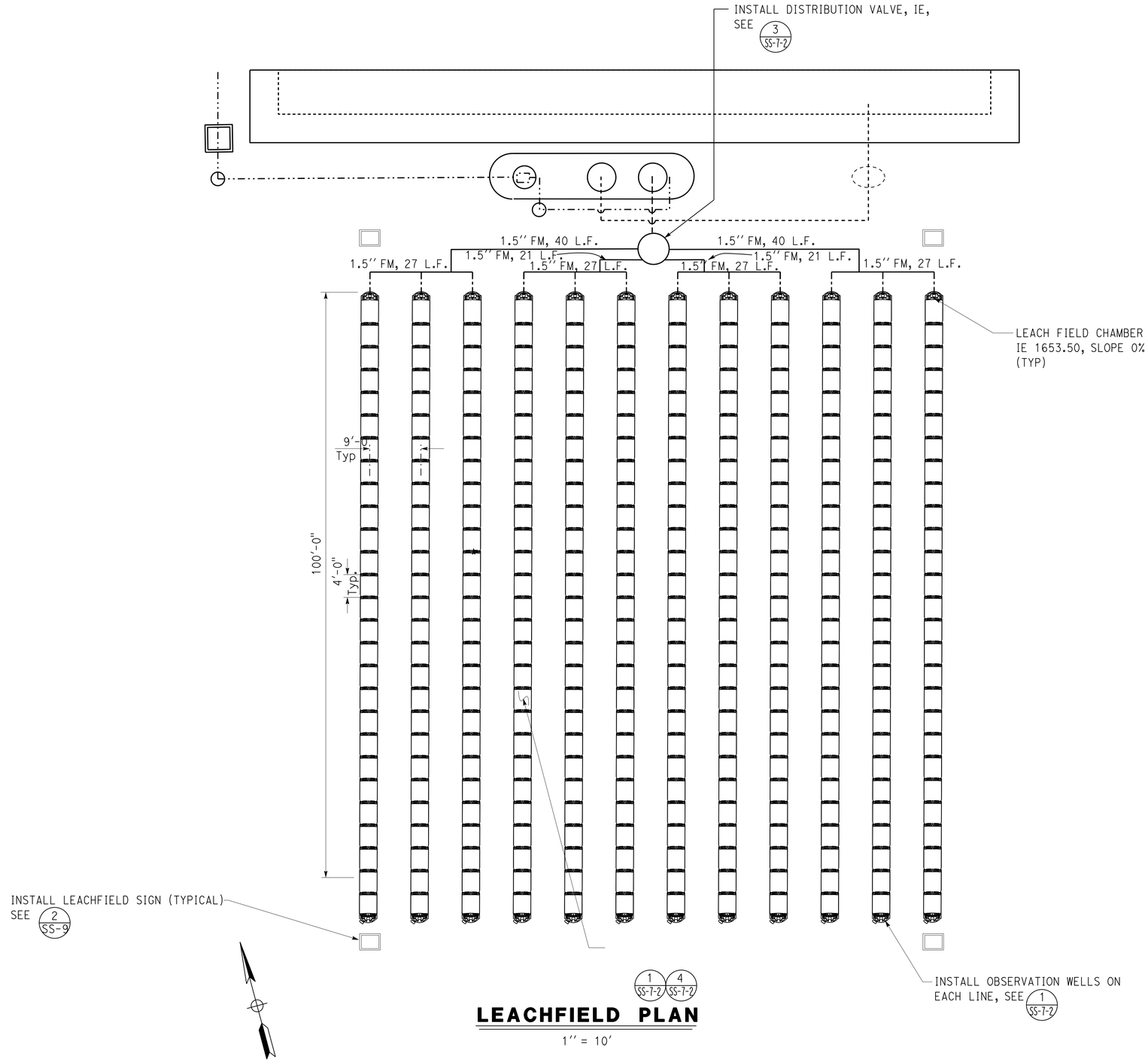

LEACHFIELD PLAN

1'' = 10'

	BY	CHECKED
DESIGN	Kosha Shah	Don Hansen
DETAILS	Kosha Shah	Don Hansen
QUANTITIES	Kosha Shah	Don Hansen

STATE OF CALIFORNIA
DEPARTMENT OF TRANSPORTATION

DIVISION OF ENGINEERING SERVICES
ELECTRICAL-MECHANICAL-WATER AND WASTEWATER DESIGN

BRIDGE NO. 56R0003R/L
POST MILE R72.0

CACTUS CITY SAFETY ROADSIDE REST AREA WASTEWATER TREATMENT SYSTEM

LEACHFIELD PLAN

SHEET **SS7-1**

TAEMWW Imperial Rev. 7/10

ORIGINAL SCALE IN INCHES FOR REDUCED PLANS 0 1 2 3

UNIT 3616
PROJECT NUMBER & PHASE 08000004441
EA 0L9000

DISREGARD PRINTS BEARING EARLIER REVISION DATES →

REVISION DATES (PRELIMINARY STAGE ONLY): 12/20/10 | 2/15/11 | 2/25/11 | 4/10/11 | 6/8/11 | 6/23/11 | 10/18/12 | 12/03/12

SHEET OF

13-NOV-2013 09:44

ss_07_1.dgn

DIST.	COUNTY	ROUTE	POST MILES TOTAL PROJECT	SHEET NO.	TOTAL SHEETS
08	Riv	10	R71.8/R72.3	23	38

CALIFORNIA STATE FIRE MARSHAL APPROVED
Approval of this plan does not authorize or approve any omission or deviation from applicable regulations. Final approval is subject to field inspection. One set of approved plans shall be available on the project site at all times.
Reviewed by: SPENCER MEYER
Approval date: 11-07-13

Kosha K. Shah 12/03/12
REGISTERED CIVIL ENGINEER DATE

REGISTERED PROFESSIONAL ENGINEER KOSHA K. SHAH No. C 73864 Exp. 6/30/15 CIVIL STATE OF CALIFORNIA

11-12-13
PLANS APPROVAL DATE

The State of California or its officers or agents shall not be responsible for the accuracy or completeness of electronic copies of this plan sheet.

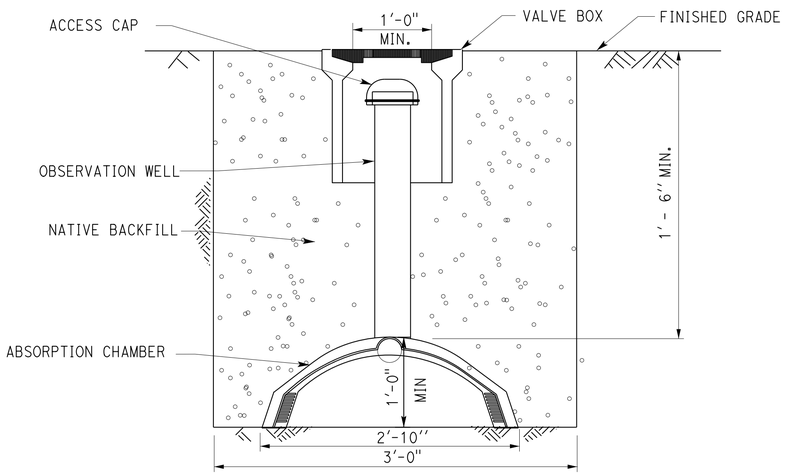

1 LEACHFIELD ABSORPTION CHAMBER AND OBSERVATION WELL

NO SCALE

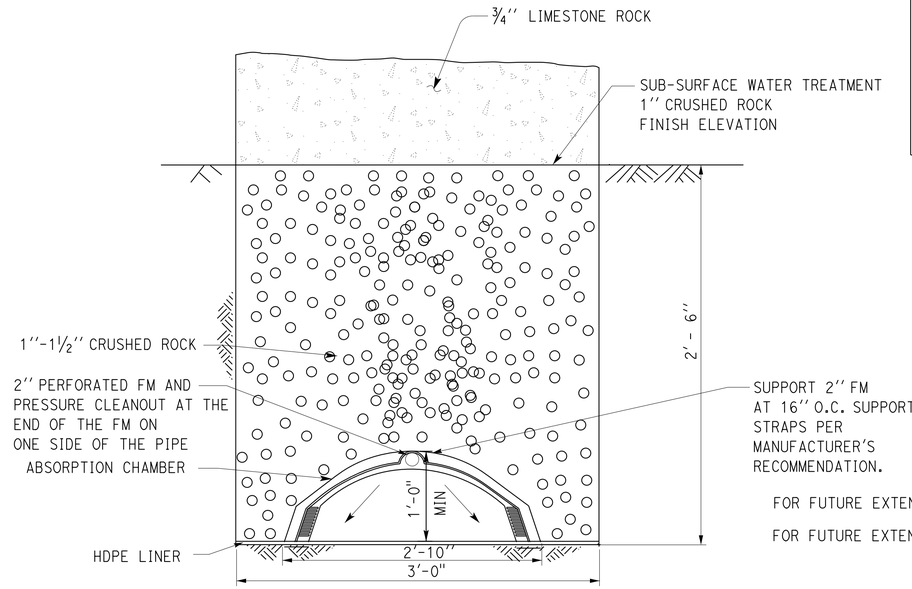

A VIEW

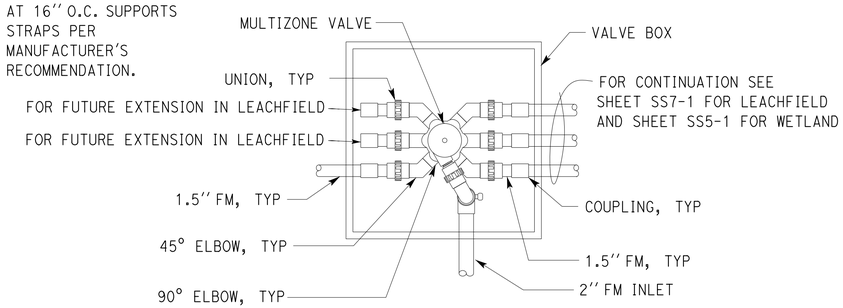

3 DISTRIBUTION VALVE DETAIL *

NO SCALE

* Note: Configuration of automatic multizone valve may vary by manufacturer. Distribution valve in wetland will have 4 outlet zones Distribution valve in leachfield will have 4 active outlets and 2 capped outlets for future use.

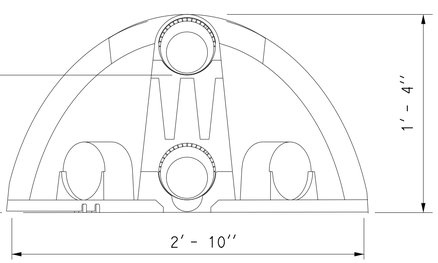

4 END CAP CHAMBER

NO SCALE

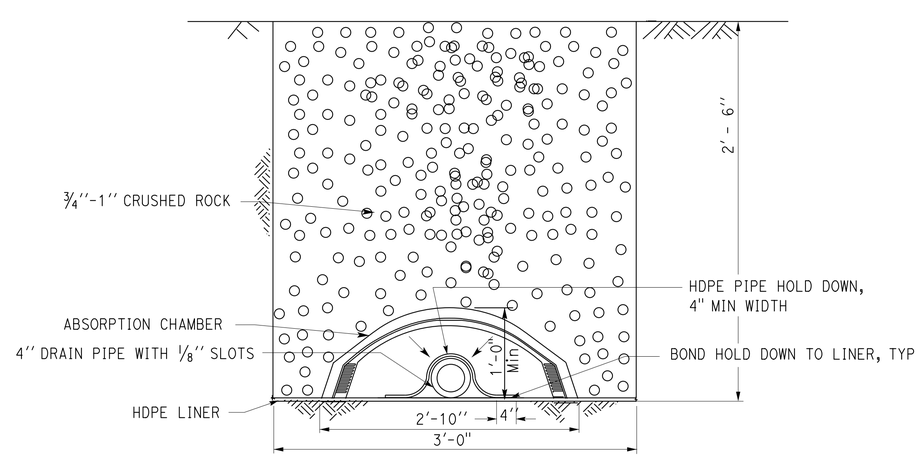

B VIEW

SUBSURFACE WATER TREATMENT ABSORPTION CHAMBERS 2

NO SCALE

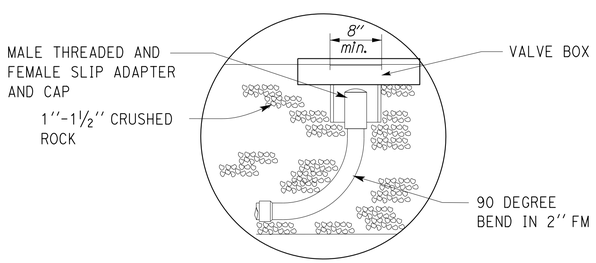

5 PRESSURE CLEANOUT

NO SCALE

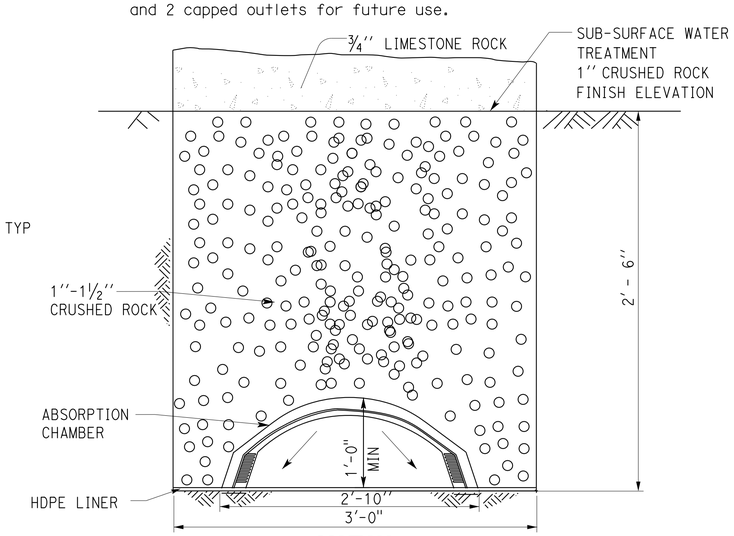

2C VIEW

DESIGN	BY Kosha Shah	CHECKED Don Hansen	
DETAILS	BY Kosha Shah	CHECKED Don Hansen	
QUANTITIES	BY Kosha Shah	CHECKED Don Hansen	

STATE OF CALIFORNIA DEPARTMENT OF TRANSPORTATION

DIVISION OF ENGINEERING SERVICES ELECTRICAL-MECHANICAL-WATER AND WASTEWATER DESIGN

BRIDGE NO. 56R0003R/L
POST MILE R72.0

CACTUS CITY SAFETY ROADSIDE REST AREA WASTEWATER TREATMENT SYSTEM

LEACHFIELD AND WETLAND DETAILS

SHEET SS7-2

TAEMWW Imperial Rev. 7/10

ORIGINAL SCALE IN INCHES FOR REDUCED PLANS 0 1 2 3

UNIT 3616
PROJECT NUMBER & PHASE 08000004441
EA 0L9000

DISREGARD PRINTS BEARING EARLIER REVISION DATES → REVISION DATES (PRELIMINARY STAGE ONLY) 12/20/10 2/15/11 2/25/11 4/10/11 6/8/11 6/23/11 10/18/12 12/03/12

SHEET OF

13-NOV-2013 09:44
ss_07_2.dgn

DIST.	COUNTY	ROUTE	POST MILES TOTAL PROJECT	SHEET NO.	TOTAL SHEETS
08	Riv	10	R71.8/R72.3	24	38

Kosha K. Shah 12/03/12
REGISTERED CIVIL ENGINEER DATE

REGISTERED PROFESSIONAL ENGINEER
KOSHA K. SHAH
No. C 73864
Exp. 6/30/15
CIVIL
STATE OF CALIFORNIA

11-12-13
PLANS APPROVAL DATE

The State of California or its officers or agents shall not be responsible for the accuracy or completeness of electronic copies of this plan sheet.

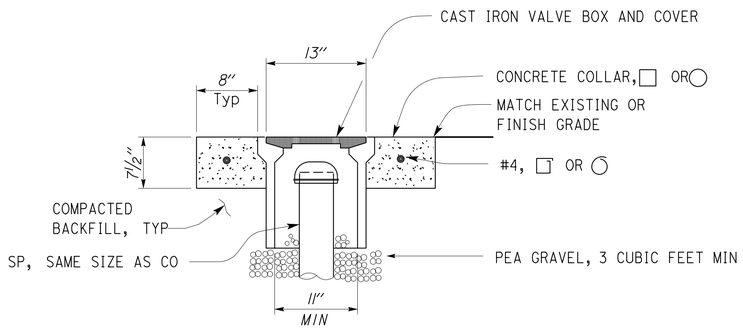

(A) COTG ACCESS BOX

NO SCALE

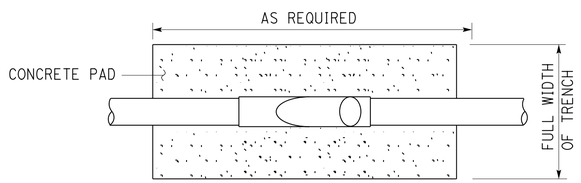

VIEW A-A

VIEW B-B

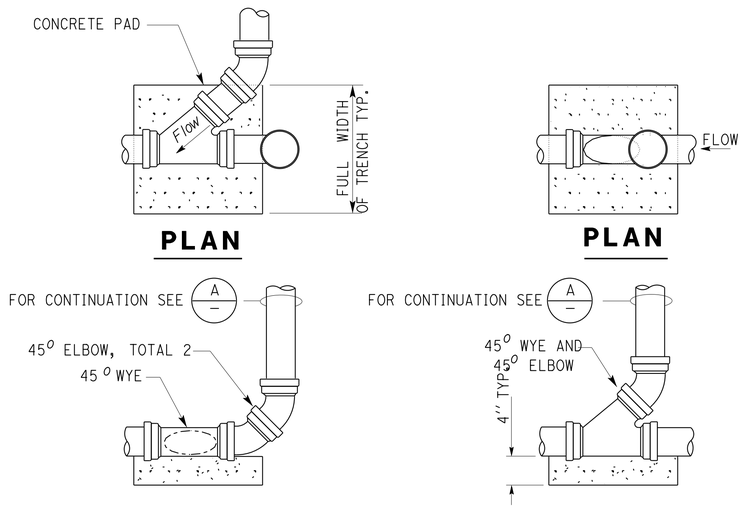

(1) CLEANOUT TO GRADE

NO SCALE

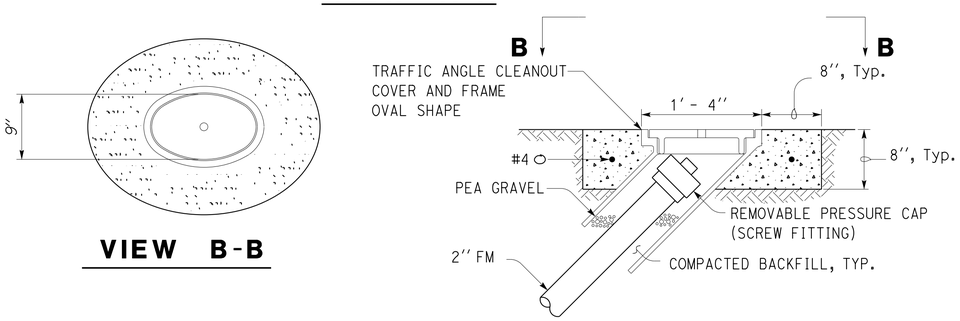

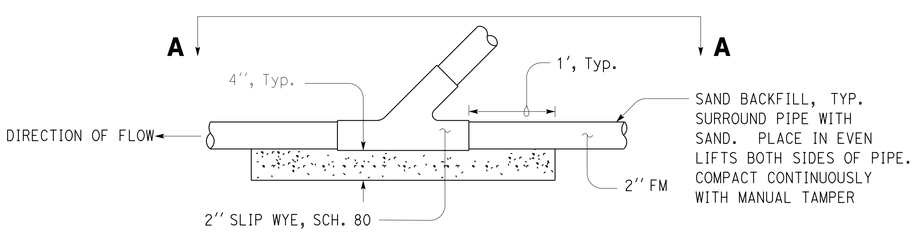

ELEVATION

(2) FORCE MAIN CLEANOUT

NO SCALE

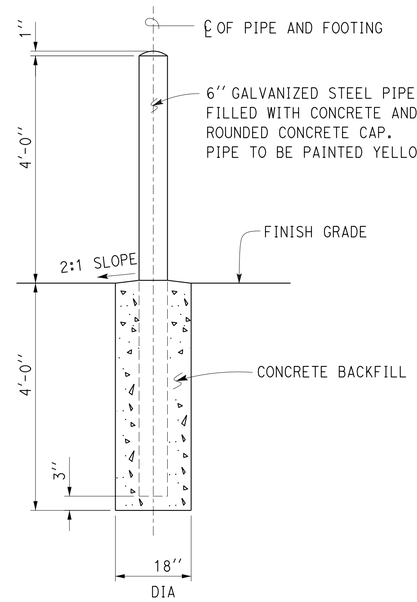

(3) GUARD POST DETAIL

NO SCALE

Notes:

(A) Manhole frame and cover, 24", match existing grade. Lettering to match existing roadway manhole.

(B) Backfill around manhole shall be structure backfill. AC and AB shall be as specified.

(C) Concentric Cone section, height as required.

(D) All pipe joints shall be sealed watertight with manhole manufacturer's recommendation, or if none, with cement mortar.

(E) Concrete barrel, height as required.

(F) Slope concrete as required to form flow line.

(G) Precast concrete base with cast in pipe sections or couplings. Flow line elevations to match plan elevations and slope.

(H) Coat all exterior surfaces of manhole with coal tar epoxy.

CALIFORNIA STATE FIRE MARSHAL APPROVED
Approval of this plan does not authorize or approve any omission or deviation from applicable regulations. Final approval is subject to field inspection. One set of approved plans shall be available on the project site at all times.
Reviewed by: SM
SPENCER MEYER
Approval date: 11-07-13

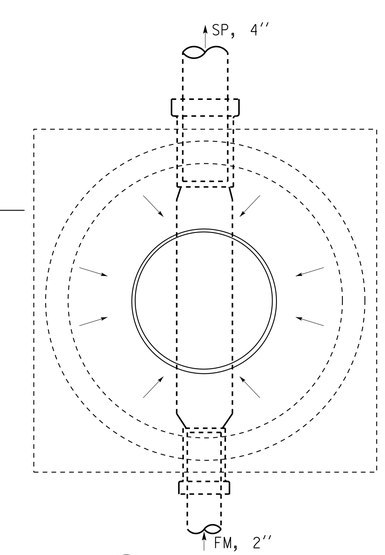

(4) MANHOLE PLAN

NO SCALE

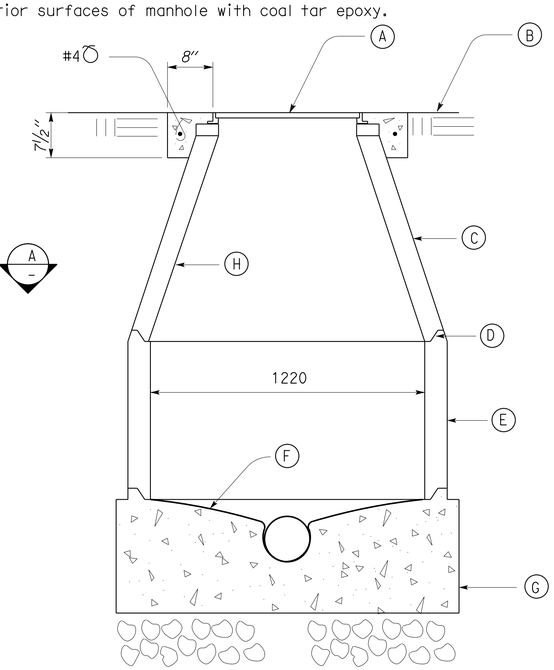

(A) SECTION

NO SCALE

DESIGN	BY Kosha Shah	CHECKED Don Hansen	
DETAILS	BY Kosha Shah	CHECKED Don Hansen	
QUANTITIES	BY Kosha Shah	CHECKED Don Hansen	

STATE OF CALIFORNIA
DEPARTMENT OF TRANSPORTATION

DIVISION OF ENGINEERING SERVICES
ELECTRICAL-MECHANICAL-WATER AND WASTEWATER DESIGN

BRIDGE NO. 56R0003R/L
POST MILE R72.0

CACTUS CITY SAFETY ROADSIDE REST AREA WASTEWATER TREATMENT SYSTEM

MISCELLANEOUS DETAILS I

SHEET **SS-8**

TAEMWW Imperial Rev. 7/10

ORIGINAL SCALE IN INCHES FOR REDUCED PLANS 0 1 2 3

UNIT 3616
PROJECT NUMBER & PHASE 08000004441
EA 0L9000

DISREGARD PRINTS BEARING EARLIER REVISION DATES

REVISION DATES (PRELIMINARY STAGE ONLY) 12/20/10 2/15/11 2/25/11 4/10/11 6/8/11 6/23/11 10/18/12 12/03/12 SHEET OF

13-NOV-2013 09:44
ss_08.dgn

DIST.	COUNTY	ROUTE	POST MILES TOTAL PROJECT	SHEET NO.	TOTAL SHEETS
08	Riv	10	R71.8/R72.3	25	38

Kosha K. Shah 12/03/12
REGISTERED CIVIL ENGINEER DATE

REGISTERED PROFESSIONAL ENGINEER KOSHA K. SHAH No. C 73864 Exp. 6/30/15 CIVIL STATE OF CALIFORNIA

11-12-13
PLANS APPROVAL DATE

The State of California or its officers or agents shall not be responsible for the accuracy or completeness of electronic copies of this plan sheet.

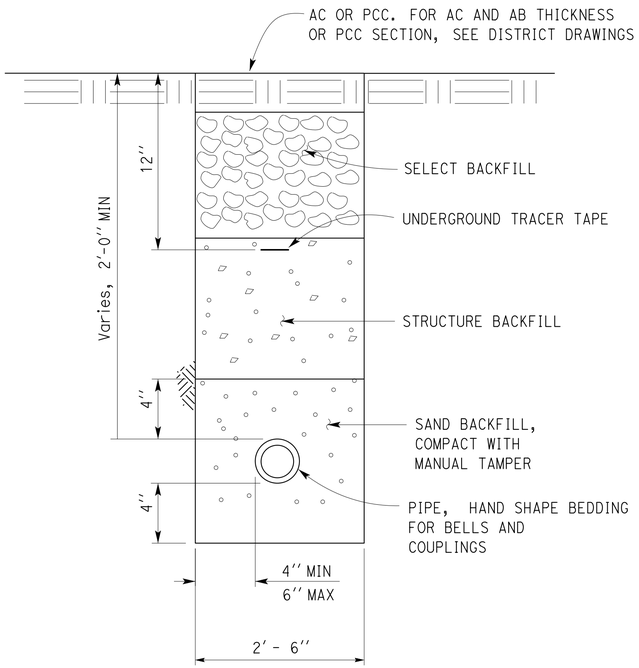

1 SEWER PIPE / FORCE MAIN

NO SCALE

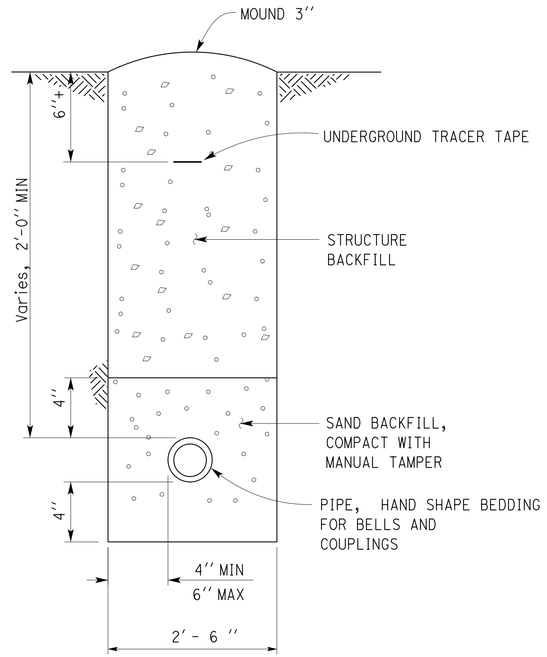

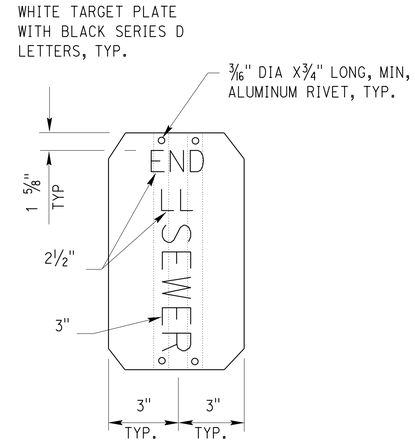

LEACHFIELD SIGN

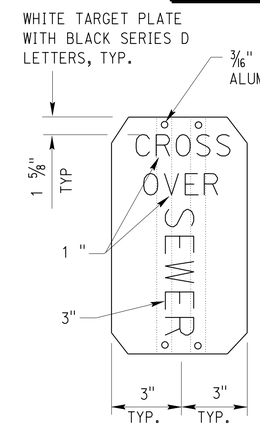

CROSS OVER SIGN

CALIFORNIA STATE FIRE MARSHAL APPROVED

Approval of this plan does not authorize or approve any omission or deviation from applicable regulations. Final approval is subject to field inspection. One set of approved plans shall be available on the project site at all times.

Reviewed by: SM
SPENCER MEYER
Approval date: 11-07-13

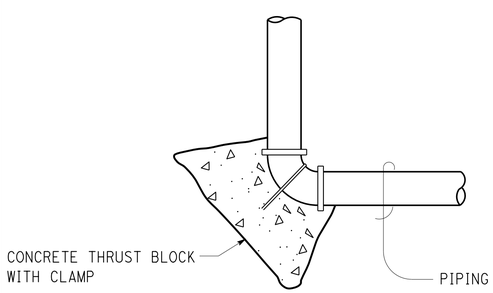

3 THRUST BLOCK DETAIL

NO SCALE

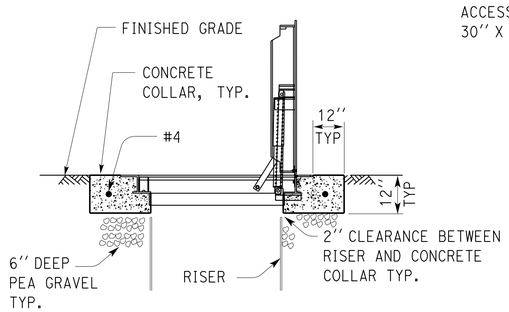

SECTION

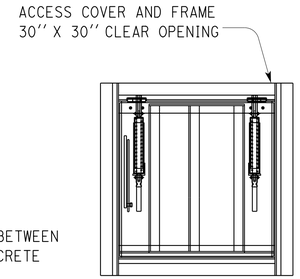

PLAN

4 ACCESS COVER AND FRAME DETAIL

NO SCALE

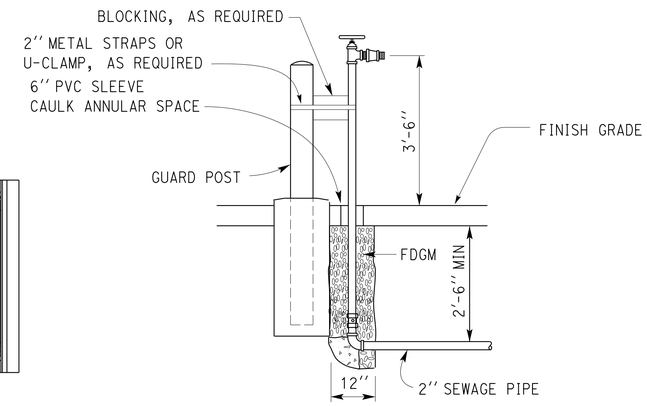

5 HOSE FAUCET

NO SCALE

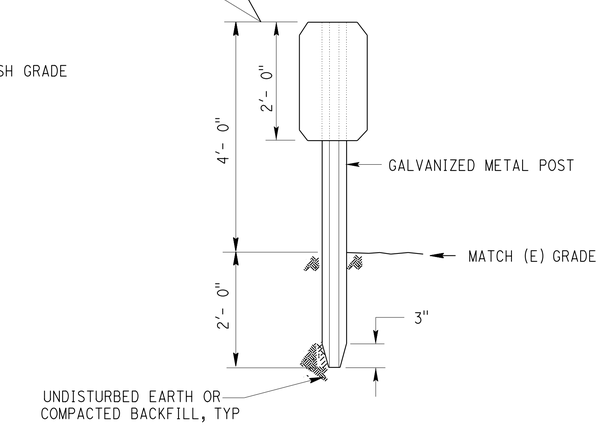

2 SIGN

NO SCALE

DESIGN	BY Kosha Shah	CHECKED Don Hansen	
DETAILS	BY Kosha Shah	CHECKED Don Hansen	
QUANTITIES	BY Kosha Shah	CHECKED Don Hansen	

STATE OF CALIFORNIA
DEPARTMENT OF TRANSPORTATION

DIVISION OF ENGINEERING SERVICES
ELECTRICAL-MECHANICAL-WATER AND WASTEWATER DESIGN

BRIDGE NO. 56R0003R/L
POST MILE R72.0

CACTUS CITY SAFETY ROADSIDE REST AREA WASTEWATER TREATMENT SYSTEM

MISCELLANEOUS DETAILS 2

SHEET SS-9

TAEMWW Imperial Rev. 7/10

ORIGINAL SCALE IN INCHES FOR REDUCED PLANS 0 1 2 3

UNIT 3616
PROJECT NUMBER & PHASE 08000004441
EA 0L9000

DISREGARD PRINTS BEARING EARLIER REVISION DATES

REVISION DATES (PRELIMINARY STAGE ONLY) 12/20/10 2/15/11 2/25/11 4/10/11 6/8/11 6/23/11 10/18/12 12/03/12

SHEET OF

13-NOV-2013 09:44
ss_09.dgn

DIST.	COUNTY	ROUTE	POST MILES TOTAL PROJECT	SHEET NO.	TOTAL SHEETS
08	Riv	10	R71.8/R72.3	26	38

Jaswinder S Sandhu 11-01-13
REGISTERED ELECTRICAL ENGINEER DATE

REGISTERED PROFESSIONAL ENGINEER Jaswinder Sandhu No. E 11803 Exp. 9-30-14 ELEC STATE OF CALIFORNIA

11-12-13
PLANS APPROVAL DATE

The State of California or its officers or agents shall not be responsible for the accuracy or completeness of electronic copies of this plan sheet.

GRAPHIC SYMBOLS FOR ELECTRICAL WIRING AND LAYOUT DIAGRAMS

SYMBOL	DESCRIPTION
	POLE-TOP ELECTROLIER
	POLE-ARM ELECTROLIER
CEILING / WALL	
S / S	SURFACE FLUORESCENT, METAL HALIDE, LED, OR SODIUM VAPOR FIXTURE
R / R	RECESSED FLUORESCENT, METAL HALIDE, LED, OR SODIUM VAPOR FIXTURE
X / X	EXIT LIGHT
	SURFACE OR PENDANT INDIVIDUAL FLUORESCENT OR LED FIXTURE
R	RECESSED INDIVIDUAL FLUORESCENT OR LED FIXTURE
	SURFACE OR PENDANT CONTINUOUS ROW FLUORESCENT OR LED FIXTURES

NOTE: A LOWER CASE LETTER NEAR GRAPHIC LIGHTING FIXTURE SYMBOL DENOTES THAT FIXTURE IS CONTROLLED BY A SIMILARLY MARKED SWITCH, AN ALPHA-NUMERIC SYMBOL NEAR GRAPHIC LIGHTING FIXTURE SYMBOL DENOTES FIXTURE TYPE, (I=INCANDESCENT, F=FLUORESCENT, MH=METAL HALIDE, H=HIGH PRESSURE SODIUM VAPOR, L=LED), DESIGN TYPE, NUMBER OF LAMPS AND WATTAGE.

EXAMPLE : (4) F2-2x32
- 32 WATT LAMPS
- 2 LAMPS
- DESIGN TYPE
- FLUORESCENT
- NUMBER OF FIXTURES

SYMBOL	DESCRIPTION
B / B	BLANK OUTLET
J / J	JUNCTION BOX
D	DROP CORD
	SINGLE RECEPTACLE OUTLET
	DUPLEX RECEPTACLE OUTLET
(GFCI)	DUPLEX RECEPTACLE OUTLET (WITH GFCI)
(GFCI) WP	DUPLEX RECEPTACLE OUTLET, WEATHERPROOF (WITH GFCI)
	SINGLE, SPECIAL PURPOSE RECEPTACLE OUTLET
	DUPLEX, SPECIAL PURPOSE RECEPTACLE OUTLET
R	RANGE OUTLET
C	CLOCK HANGER RECEPTACLE
F	FAN HANGER RECEPTACLE
	FLOOR SINGLE RECEPTACLE OUTLET
	FLOOR DUPLEX RECEPTACLE OUTLET
	FLOOR SPECIAL PURPOSE OUTLET
	FLOOR RADIO OUTLET
	FLOOR TELEPHONE OUTLET
	MULTI-FLOOR OUTLET, 2 OR MORE GANG
	MULTI-OUTLET ASSEMBLY
S	SWITCH AND SINGLE RECEPTACLE
S	SWITCH AND DUPLEX RECEPTACLE
	RADIO OUTLET
	COMMUNICATION OUTLET
	SOUND SYSTEM LOUD SPEAKER OUTLET
R	RADIO OUTLET
TV	TELEVISION OUTLET
M	MICROPHONE OUTLET
T	THERMOSTAT

SYMBOL	DESCRIPTION
S	SINGLE-POLE SWITCH
S_2	DOUBLE-POLE SWITCH
S_3	THREE-WAY SWITCH
S_4	FOUR-WAY SWITCH
S_D	AUTOMATIC DOOR
S_K	KEY OPERATED SWITCH
S_P	SWITCH AND PILOT LIGHT
S_{MC}	MOMENTARY CONTACT SWITCH
S_{RC}	REMOTE CONTROL SWITCH
S_{WP}	WEATHERPROOF SWITCH
S_F	FAN SWITCH
S_L	LIGHT SWITCH
S_H	HEATER SWITCH
S_{VS}	VARIABLE SPEED MOTOR CONTROL SWITCH
S_{CHLF}	TWO TIMER SWITCHES, ONE SWITCH FOR LIGHT AND FAN AND ONE SWITCH FOR HEAT LAMP
S^O_1	OCCUPANCY SENSOR WALL SWITCH, SINGLE LEVEL
S^O_2	OCCUPANCY SENSOR WALL SWITCH, BILEVEL
S_M	MOTION SENSOR SWITCH
S_T	MANUAL MOTOR STARTING SWITCH, THERMAL OVERLOAD TYPE
S_{HP}	MANUAL MOTOR STARTING SWITCH, WITHOUT OVERLOAD ELEMENT
T_S	TIMER SWITCH
	PUSHBUTTON
L	PUSHBUTTON STATION, NC, WITH LOCKING DEVICE FOR OPEN
	PUSHBUTTON STATION MOTOR CONTROL
	BUZZER
	BELL
	COMBINATION BELL-BUZZER
PS	PRESSURE SWITCH
R	CONTROL RELAY
FS	FLOW SWITCH
PEU	PHOTOELECTRIC UNIT
	HAND DRYER NOZZLE
H	HAND DRYER
	FLUSH-MOUNTED PANELBOARD AND CABINET
	SURFACE-MOUNTED PANELBOARD AND CABINET
	LIGHTING PANEL
	POWER PANEL
	COMBINATION LIGHTING AND POWER
MC	MOTOR CONTROLLER
	DISCONNECT SWITCH
	CONDUIT CONCEALED IN CEILING OR WALL
	CONDUIT CONCEALED IN FLOOR
	CONDUIT EXPOSED
	CROSS-LINES INDICATE NUMBER OF 12 AWG CONDUCTORS. LONGER CROSS-LINE INDICATES 1#12 AWG (G) FOR EQUIPMENT GROUNDING CONDUCTOR. NO CROSS-LINE INDICATES 2#12 WITH 1#12 (G) UNLESS OTHERWISE NOTED. ALL CONDUIT SIZE MUST BE ½" UNLESS OTHERWISE NOTED.
A1,2	HOMERUN TO PANELBOARD, ARROWS INDICATE NUMBER OF CIRCUITS, LETTER DENOTES PANELBOARD, NUMERAL DENOTES CIRCUIT

SYMBOL	DESCRIPTION
SM	SURFACE METAL RACEWAY
(2) ½"C, PVC, 2#12	CONDUCTOR INFO (PER CONDUIT); CONDUIT TYPE; CONDUIT SIZE; NUMBER OF CONDUITS (NO NUMBER INDICATES ONE CONDUIT)
MC	CONDUIT, RIGID STEEL, UNDERGROUND
PVC	CONDUIT, POLYVINYL CHLORIDE, UNDERGROUND
	CONDUIT, FLEXIBLE
	CONDUIT, TURN UP
	CONDUIT, TURN DOWN
	CONDUIT SEAL, EXPLOSION-PROOF
X	CONDUIT, EXPANSION JOINT
	ADAPTER, ONE TYPE CONDUIT TO ANOTHER
	POLE
OC	OCCUPANCY SENSOR
P	OCCUPANCY SENSOR POWER PACK
P	MANUAL PULL STATION
AV	AUDIO/VISUAL ALARM DEVICE
H	HEAT DETECTOR
S	SMOKE DETECTOR
G	GLASS BREAK DISCRIMINATOR
C	MAGNETIC CONTACT SWITCH-PEDESTRIAN DOOR
C	MAGNETIC CONTACT SWITCH-VEHICLE DOOR
K	KEYPAD FOR ALARM SYSTEM
W	COMBINATION DETECTOR (MICROWAVE/PASSIVE INFRARED)
	PULL BOX-LETTER INDICATES TYPE OF PULL BOX (E-ELECTRICAL, T-TELEPHONE, R-RADIO)
(T)	PULL BOX (TRAFFIC-RATED)-LETTER INDICATES TYPE OF PULL BOX (E-ELECTRICAL, T-TELEPHONE, R-RADIO)
CHLF	COMBINATION HEAT, LIGHT, AND FAN UNIT
A / EE-2	SECTION/ELEVATION LETTER; SHEET NUMBER
1 / EE-2	DETAIL NUMBER; SHEET NUMBER

REMODEL WORK

SYMBOL	DESCRIPTION
	EXISTING FLUORESCENT FIXTURE-TO REMAIN
	EXISTING FLUORESCENT FIXTURE-REMOVE
	EXISTING INCANDESCENT FIXTURE-TO REMAIN
	EXISTING INCANDESCENT FIXTURE-REMOVE
	EXISTING OUTLET-TO REMAIN
	EXISTING RECEPTACLE OUTLET-TO REMAIN
	EXISTING RECEPTACLE OUTLET-REMOVE
-E---E-	EXISTING CONDUIT AND CONDUCTORS-TO REMAIN UNLESS OTHERWISE NOTED
-X---X-	EXISTING CONDUIT AND CONDUCTORS-REMOVE
S	EXISTING SWITCH-TO REMAIN
	EXISTING SWITCH-REMOVE
J	EXISTING JUNCTION BOX-TO REMAIN
	EXISTING JUNCTION BOX-REMOVE

GRAPHIC SYMBOLS FOR ELECTRICAL DIAGRAMS

SYMBOL	DESCRIPTION
	CIRCUIT BREAKER, SINGLE-POLE
	CIRCUIT BREAKER, DOUBLE-POLE
	CIRCUIT BREAKER, THREE-POLE
GFCI	CIRCUIT BREAKER, WITH GROUND FAULT CIRCUIT INTERRUPTER
	CIRCUIT BREAKER, SINGLE-POLE, SWITCHED NEUTRAL
	CONTACT, NORMALLY OPEN
	CONTACT, NORMALLY CLOSED
	CONTACT, NORMALLY CLOSED, TIME DELAY CLOSING ON DE-ENERGIZING
	CONTACT, NORMALLY OPEN, TIME DELAY OPENING ON DE-ENERGIZING
	CONTACT, NORMALLY OPEN, TIME DELAY CLOSING ON ENERGIZING
	CONTACT, NORMALLY CLOSED, TIME DELAY OPENING ON ENERGIZING
	CONTACT, SINGLE-POLE, DOUBLE-THROW
	OPERATING COIL
	LIQUID LEVEL ACTUATED SWITCH, NORMALLY CLOSED
	LIQUID LEVEL ACTUATED SWITCH, NORMALLY OPEN
	PRESSURE ACTUATED SWITCH, NORMALLY CLOSED
	PRESSURE ACTUATED SWITCH, NORMALLY OPEN
	FLOW ACTUATED SWITCH, NORMALLY CLOSED
	FLOW ACTUATED SWITCH, NORMALLY OPEN
	TEMPERATURE ACTUATED SWITCH, NORMALLY CLOSED
	TEMPERATURE ACTUATED SWITCH, NORMALLY OPEN
	LIMIT SWITCH, NORMALLY CLOSED
	LIMIT SWITCH, NORMALLY OPEN
	PUSHBUTTON SWITCH, NORMALLY CLOSED
	PUSHBUTTON SWITCH, NORMALLY OPEN
	SWITCH, SINGLE-POLE
	SWITCH, SINGLE-POLE, DOUBLE-THROW
	SWITCH, DOUBLE-POLE
	SWITCH, DOUBLE-POLE, DOUBLE-THROW
	SWITCH, SINGLE-POLE, 3-POSITION
	THERMAL OVERLOAD
	FUSE
	RESISTOR
	VARIABLE RESISTOR
	TRANSFORMER WINDING
	GROUNDING ELECTRODE
	ENCLOSURE BOND
A	PILOT LIGHT (A=AMBER, G=GREEN, R=RED)
G	GENERATOR
M	MOTOR
F	FAN MOTOR

CALIFORNIA STATE FIRE MARSHAL APPROVED
Approval of this plan does not authorize or approve any omission or deviation from applicable regulations. Final approval is subject to field inspection. One set of approved plans shall be available on the project site at all times.
Reviewed by: SM SPENCER MEYER
Approval date: 11-07-13

	BY	CHECKED
DESIGN	Joseph Abdelsayed	J.S. Sandhu
DETAILS	Joseph Abdelsayed	J.S. Sandhu
QUANTITIES	Joseph Abdelsayed	J.S. Sandhu

STATE OF CALIFORNIA
DEPARTMENT OF TRANSPORTATION

DIVISION OF ENGINEERING SERVICES
ELECTRICAL-MECHANICAL-WATER AND WASTEWATER DESIGN

BRIDGE NO. 56R0003R/L
POST MILE R72.0

CACTUS CITY SAFETY ROADSIDE REST AREA WASTEWATER TREATMENT SYSTEM

LEGEND

SHEET **EE0-0**

TAEMWW Imperial Rev. 7/10

ORIGINAL SCALE IN INCHES FOR REDUCED PLANS 0 1 2 3

UNIT 3596
PROJECT NUMBER & PHASE 08000004441
EA 0L9000

DISREGARD PRINTS BEARING EARLIER REVISION DATES → 12/3/12

REVISION DATES (PRELIMINARY STAGE ONLY) SHEET OF

13-NOV-2013 05:28

ee0_00.dgn

DIST.	COUNTY	ROUTE	POST MILES TOTAL PROJECT	SHEET NO.	TOTAL SHEETS
08	Riv	10	R71.8/R72.3	27	38

CALIFORNIA STATE FIRE MARSHAL APPROVED
Approval of this plan does not authorize or approve any omission or deviation from applicable regulations. Final approval is subject to field inspection. One set of approved plans shall be available on the project site at all times.
Reviewed by: SPENCER MEYER
Approval date: 11-07-13

Jaswinder S Sandhu 11-01-13
REGISTERED ELECTRICAL ENGINEER DATE

REGISTERED PROFESSIONAL ENGINEER Jaswinder Sandhu No. E 11803 Exp. 9-30-14 ELEC STATE OF CALIFORNIA

11-12-13
PLANS APPROVAL DATE

The State of California or its officers or agents shall not be responsible for the accuracy or completeness of electronic copies of this plan sheet.

ABBREVIATIONS

A

AC ALTERNATING CURRENT
A/C AIR CONDITIONING DISCONNECT
ACD AIR COMPRESSOR STARTER
AFCI ARC FAULT CIRCUIT INTERRUPTER
AI ANALOG INPUT
AL ALARM LIGHT
AO ANALOG OUTPUT
AR ALARM RESET
AVC AIR VOLUME CONTROLLER

B

BC BARE COPPER
BD BUILDING DISCONNECT
BP BOOSTER PUMP
Brk BREAKER

C

Cat CATEGORY
CC CENTER CHANNEL LIGHT
CD CONTROL DISCONNECT
CM CENTER MARGIN LIGHT
CR CONTROL RELAY
CS CURRENT SWITCH
CT CURRENT TRANSFORMER

D

DC DIRECT CURRENT
DI DIGITAL INPUT
DMM DIGITAL MULTIMETER
DO DIGITAL OUTPUT
DP DUPLEX PLUG RECEPTACLE
DS DOOR SWITCH

E

(E) EXISTING
EF EXHAUST FAN

F

F FUSE
FL FAILURE LIGHT
FLA FLASHER
Flex FLEXIBLE CONDUIT
FLS FLOW SWITCH
FR FAILURE RESET or FLAME RESISTANT
FS FLOAT SWITCH

G

G GROUND
GB GROUND BAR
GRS GALVANIZED RIGID STEEL

H

hp HORSEPOWER

I

IC IRRIGATION CONTROLLER
ICC IRRIGATION CONTROLLER CABINET
IR INDUCTION RELAY
ISR INTRINSICALLY SAFE RELAY

J

JB JUNCTION BOX

L

L LIGHT or LENGTH
LC LIGHTING CONTACTOR
LCD LIQUID CRYSTAL DISPLAY
LCP LIGHTING CONTROL PANEL
LD LIGHT DISCONNECT
LDCI LEAK DETECTOR CIRCUIT INTERRUPTER
LL LIQUID LEVEL RELAY
LLC LIQUID LEVEL CONTROLLER
LP LIGHT PANEL
LS LIGHT SWITCH
LT LIGHT TRANSFORMER
LTO LIGHT TRANSFORMER OVERLOAD

M

MB MAIN BREAKER
MC METALLIC CONDUIT
MCP MOTOR CIRCUIT PROTECTOR
MCC MOTOR CONTROL CENTER
MD MOTOR DISCONNECT
MH MOUNTING HEIGHT
MSB MAIN SWITCHBOARD

N

(N) NEW
Nav NAVIGATIONAL LIGHTS
NSW NEUTRAL SWITCHING BREAKER

O

O/C ON CENTER
OL OVERLOAD

P

PB PULL BOX or PUSHBUTTON
PCP PUMP CONTROL PANEL
PD PUMP DISCONNECT
PFR PHASE FAILURE RELAY
PFRD PHASE FAILURE RELAY DISCONNECT
PL PILOT LIGHT
PS PRESSURE SWITCH
PTS POWER TRANSFER SWITCH
PV PHOTOVOLTAIC

R

RD RECEPTACLE DISCONNECT
RES RESISTOR
RMB RECIRCULATION AND LEACHFIELD MAIN
RTB RADIO TERMINAL BOARD

S

S STARTER COIL
Sch SCHEDULE
SD SERVICE DISCONNECT
Sec SECONDS
SFR SEAL FAILURE RELAY
SPD SPARE DISCONNECT
SPR STANDBY POWER RECEPTACLE
Sq SQUARE
SS SELECTOR SWITCH
ST STARTER
SV SOLENOID VALVE
SWIM SLOW WEIGH-IN-MOTION

T

TB TERMINAL BLOCK
TC TELEPHONE CABLE
TDR TIME DELAY RELAY
TGLS TOGGLE SWITCH
TM TIME METER
TS TIMER SWITCH
TSW TEST SWITCH
TTB TELEPHONE TERMINAL BOARD

U

UPS UNINTERRUPTIBLE POWER SUPPLY

W

WLS WATER LEVEL SWITCH
WP WEATHERPROOF
WSMS WEIGH STATION MESSAGE SIGN

PROJECT NOTES

1. Separate grounded (Neutral) conductor must be used for each 120-volt circuit.
2. Homeruns to Panelboards must be installed as shown on the plans. Homeruns must not be combined.
3. A single insulated equipment grounding conductor, sized as required, must be installed in each conduit run.

STANDARD NOTES

RLD Relocated equipment.

SYMBOLS

∠ ANGLE
° DEGREES
Δ DELTA
ø PHASE
± PLUS OR MINUS

STANDARD PLANS DATED 2010

- RSP ES-1A ELECTRICAL SYSTEMS (LEGEND AND ABBREVIATIONS)
- RSP ES-1C ELECTRICAL SYSTEMS (LEGEND AND ABBREVIATIONS)
- RSP ES-8A ELECTRICAL SYSTEMS (NON-TRAFFIC PULL BOX)

	BY	CHECKED
DESIGN	Joseph Abdelsayed	J.S. Sandhu
DETAILS	Joseph Abdelsayed	J.S. Sandhu
QUANTITIES	Joseph Abdelsayed	J.S. Sandhu

STATE OF CALIFORNIA
DEPARTMENT OF TRANSPORTATION

DIVISION OF ENGINEERING SERVICES
ELECTRICAL-MECHANICAL-WATER AND WASTEWATER DESIGN

BRIDGE NO. 56R0003R/L
POST MILE R72.0

CACTUS CITY SAFETY ROADSIDE REST AREA
WASTEWATER TREATMENT SYSTEM
NOTES AND ABBREVIATIONS

SHEET EE0-1

TAEMWW Imperial Rev. 7/10

ORIGINAL SCALE IN INCHES FOR REDUCED PLANS 0 1 2 3

UNIT 3596
PROJECT NUMBER & PHASE 08000004441
EA 0L9000

DISREGARD PRINTS BEARING EARLIER REVISION DATES → 12/3/12
REVISION DATES (PRELIMINARY STAGE ONLY) SHEET OF

13-NOV-2013 05:28
ee0_01.dgn

DIST.	COUNTY	ROUTE	POST MILES TOTAL PROJECT	SHEET NO.	TOTAL SHEETS
08	Riv	10	R71.8/R72.3	28	38

CALIFORNIA STATE FIRE MARSHAL APPROVED
Approval of this plan does not authorize or approve any omission or deviation from applicable regulations. Final approvals subject to field inspection. One set of approved plans shall be available on the project site at all times.
Reviewed by: SPENCER MEYER
Approval date: 11-07-13

Jaswinder S Sandhu 11-01-13
REGISTERED ELECTRICAL ENGINEER DATE

REGISTERED PROFESSIONAL ENGINEER Jaswinder Sandhu No. E 11803 Exp. 9-30-14 ELEC STATE OF CALIFORNIA

11-12-13
PLANS APPROVAL DATE

The State of California or its officers or agents shall not be responsible for the accuracy or completeness of electronic copies of this plan sheet.

GENERAL NOTES:

1. Existing underground electrical conduits and conductors system as shown are diagrammatic and their locations as shown are approximate only. Therefore, field verify exact location of existing underground facilities prior to the beginning of trenching and or removal work. The cost for locating existing underground utilities must be considered to be paid for in the building lump sump price, and no additional cost will be paid.

2. Not all electrical systems are shown on this plan for clarity.

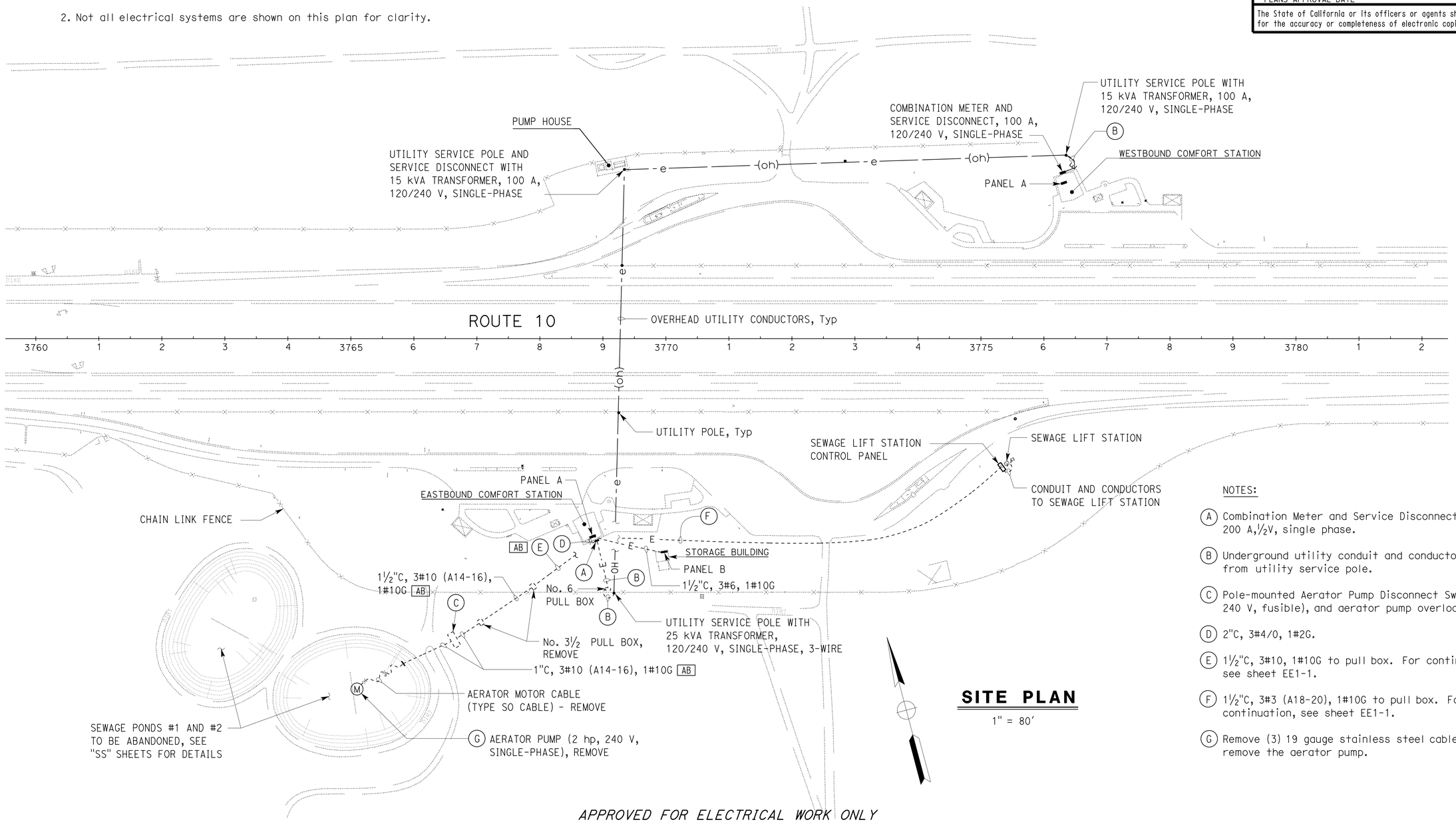

SITE PLAN

1" = 80'

NOTES:

(A) Combination Meter and Service Disconnect, 200 A, ½V, single phase.

(B) Underground utility conduit and conductors from utility service pole.

(C) Pole-mounted Aerator Pump Disconnect Switch (30 A, 240 V, fusible), and aerator pump overload - Remove.

(D) 2"C, 3#4/0, 1#2G.

(E) 1½"C, 3#10, 1#10G to pull box. For continuation, see sheet EE1-1.

(F) 1½"C, 3#3 (A18-20), 1#10G to pull box. For continuation, see sheet EE1-1.

(G) Remove (3) 19 gauge stainless steel cables to remove the aerator pump.

APPROVED FOR ELECTRICAL WORK ONLY

DESIGN SUPERVISOR	DESIGN	BY Joseph Abdelsayed	CHECKED J.S. Sandhu
DESIGN ENGINEER Jaswinder S Sandhu	DETAILS	BY Ed D. Tapalla 1/11	CHECKED Joseph Abdelsayed
	QUANTITIES	BY Joseph Abdelsayed	CHECKED J.S. Sandhu

STATE OF CALIFORNIA DEPARTMENT OF TRANSPORTATION

DIVISION OF ENGINEERING SERVICES
ELECTRICAL-MECHANICAL-WATER AND WASTEWATER DESIGN

BRIDGE NO. 56R0003R/L
POST MILE R72.0

CACTUS CITY SAFETY ROADSIDE REST AREA WASTEWATER TREATMENT SYSTEM

EXISTING SITE PLAN

SHEET **EE0-2**

TAEMWW Imperial Rev. 7/10

ORIGINAL SCALE IN INCHES FOR REDUCED PLANS 0 1 2 3

UNIT 3596
PROJECT NUMBER & PHASE 08000004441
EA 0L9000

DISREGARD PRINTS BEARING EARLIER REVISION DATES → 1/4/11 2/11/11 10/31/11 12/3/12

REVISION DATES (PRELIMINARY STAGE ONLY) SHEET OF

13-NOV-2013 05:31

ee0_02.dgn

DIST.	COUNTY	ROUTE	POST MILES TOTAL PROJECT	SHEET NO.	TOTAL SHEETS
08	Riv	10	R71.8/R72.3	29	38

CALIFORNIA STATE FIRE MARSHAL APPROVED

Approval of this plan does not authorize or approve any omission or deviation from applicable regulations. Final approval is subject to field inspection. One set of approved plans shall be available on the project site at all times.

Reviewed by: SPENCER MEYER

Approval date: 11-07-13

Jaswinder S Sandhu 11-01-13
REGISTERED ELECTRICAL ENGINEER DATE

REGISTERED PROFESSIONAL ENGINEER Jaswinder Sandhu No. E 11803 Exp. 9-30-14 ELEC STATE OF CALIFORNIA

11-12-13
PLANS APPROVAL DATE

The State of California or its officers or agents shall not be responsible for the accuracy or completeness of electronic copies of this plan sheet.

Refer to the Specifications 99-02220(C2) excavation of conduits

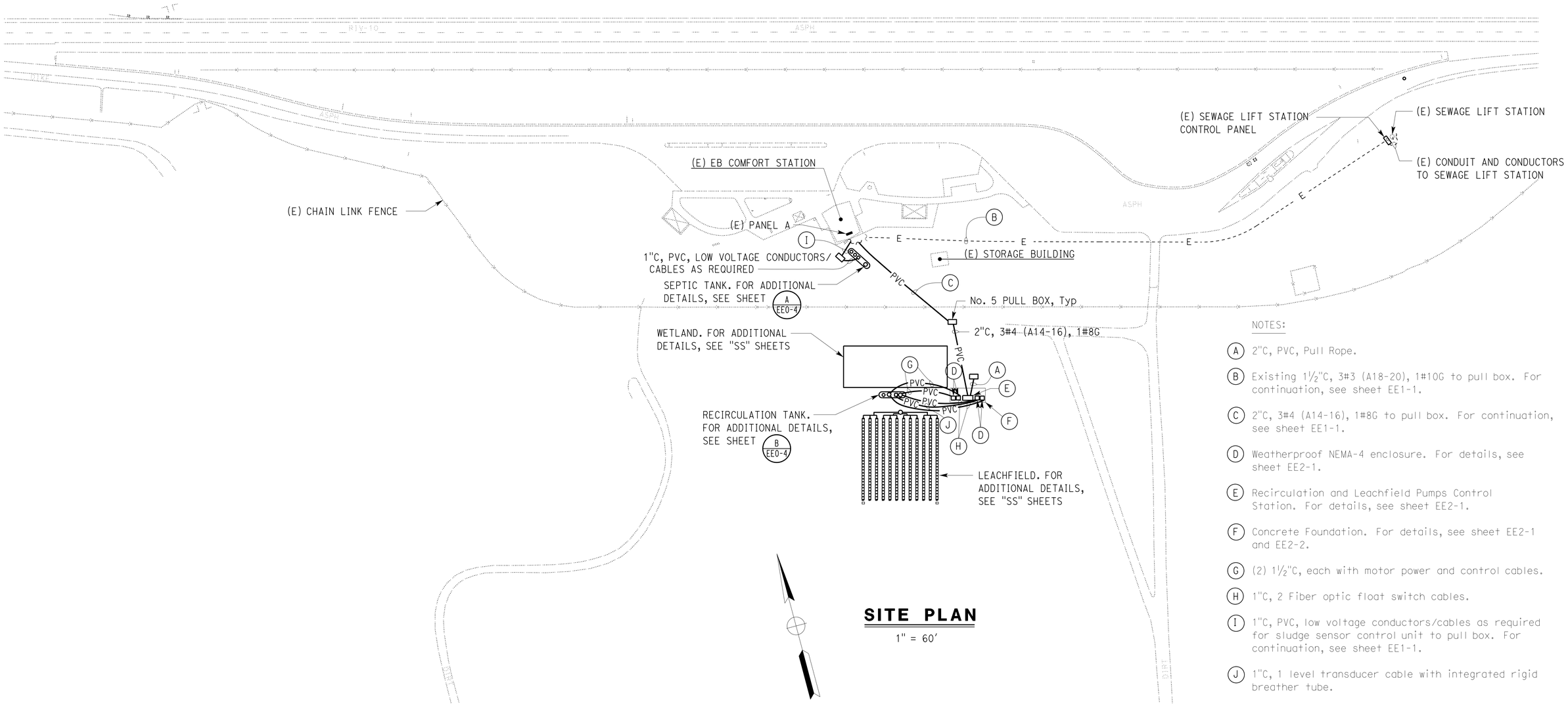

SITE PLAN

1" = 60'

NOTES:

(A) 2"C, PVC, Pull Rope.

(B) Existing 1½"C, 3#3 (A18-20), 1#10G to pull box. For continuation, see sheet EE1-1.

(C) 2"C, 3#4 (A14-16), 1#8G to pull box. For continuation, see sheet EE1-1.

(D) Weatherproof NEMA-4 enclosure. For details, see sheet EE2-1.

(E) Recirculation and Leachfield Pumps Control Station. For details, see sheet EE2-1.

(F) Concrete Foundation. For details, see sheet EE2-1 and EE2-2.

(G) (2) 1½"C, each with motor power and control cables.

(H) 1"C, 2 Fiber optic float switch cables.

(I) 1"C, PVC, low voltage conductors/cables as required for sludge sensor control unit to pull box. For continuation, see sheet EE1-1.

(J) 1"C, 1 level transducer cable with integrated rigid breather tube.

APPROVED FOR ELECTRICAL WORK ONLY

	BY	CHECKED
DESIGN	Joseph Abdelsayed	J.S. Sandhu
DETAILS	Ed D. Tapalla 1/11	Joseph Abdelsayed
QUANTITIES	Joseph Abdelsayed	J.S. Sandhu

STATE OF CALIFORNIA DEPARTMENT OF TRANSPORTATION

DIVISION OF ENGINEERING SERVICES
ELECTRICAL-MECHANICAL-WATER AND WASTEWATER DESIGN

BRIDGE NO. 56R0003R/L
POST MILE R72.0

CACTUS CITY SAFETY ROADSIDE REST AREA WASTEWATER TREATMENT SYSTEM

EASTBOUND — MODIFIED SITE PLAN 1

SHEET **EE0-3**

TAEMWW Imperial Rev. 7/10

ORIGINAL SCALE IN INCHES FOR REDUCED PLANS 0 1 2 3

UNIT 3596
PROJECT NUMBER & PHASE 08000004441
EA 0L9000

DISREGARD PRINTS BEARING EARLIER REVISION DATES → 12/4/11 10/31/11 12/3/12

REVISION DATES (PRELIMINARY STAGE ONLY) SHEET OF

13-NOV-2013 05:47

ee0_03.dgn

DIST.	COUNTY	ROUTE	POST MILES TOTAL PROJECT	SHEET NO.	TOTAL SHEETS
08	Riv	10	R71.8/R72.3	30	38

Jaswinder S Sandhu 11-01-13
REGISTERED ELECTRICAL ENGINEER DATE

REGISTERED PROFESSIONAL ENGINEER Jaswinder Sandhu No. E 11803 Exp. 9-30-14 ELEC STATE OF CALIFORNIA

11-12-13
PLANS APPROVAL DATE

The State of California or its officers or agents shall not be responsible for the accuracy or completeness of electronic copies of this plan sheet.

CALIFORNIA STATE FIRE MARSHAL APPROVED
Approval of this plan does not authorize or approve any omission or deviation from applicable regulations. Final approval is subject to field inspection. One set of approved plans shall be available on the project site at all times.
Reviewed by: SPENCER MEYER
Approval date: 11-07-13

GENERAL NOTES FOR DETAIL A:

1. All underground metallic conduit (MC) shown on this detail must be PVC coated rigid steel type conduit.
2. Complete low voltage control conduits and conductors/cables are not shown on this plan sheet. For exact location of the sludge sensor see Sanitary Plan sheets.
3. Install low voltage conduits and conductors/cable to the sludge sensor as shown on Sanitary Plans. Submit low voltage conduits and conductors/cables system layout for approval prior to installation of the system.
4. All cables must be per sludge sensor manufacturer requirements and must be shielded.
5. All conductors/cables between the sludge sensor and the sludge sensor control unit must be unspliced.
6. The entire installation must comply with Class 1, Division 1 requirements of the California Electrical Code (CEC).
7. For conduit termination at the Septic Tank, see sheet SS-3.

NOTES FOR DETAIL A:

(A) 1"C, low voltage system conductors/cables as required for sludge sensor control unit. See General Notes.

(B) Conductor/cables as required to sludge sensor.

(C) Install pull box extension to accommodate conduit seal installation inside the pull box.

(D) Provide 20 inches length of slack of conductors/cables extending out from conduit seal. Splice sludge sensor cables to conductors from sludge sensor control unit.

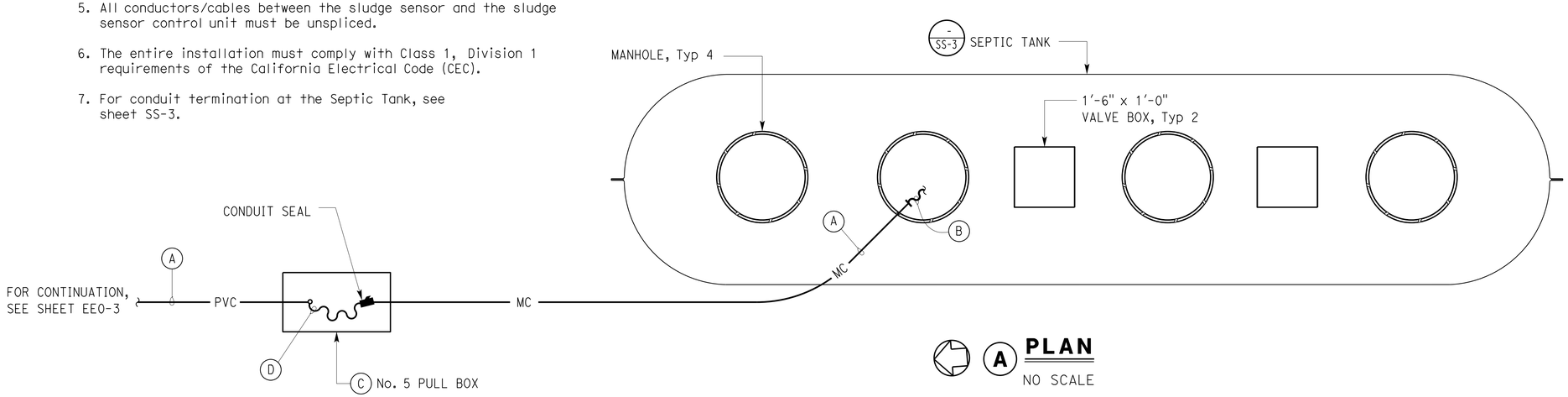

A PLAN
NO SCALE

GENERAL NOTES FOR DETAIL B:

1. For all conduit terminations at the Recirculation Tank, see sheet SS-6.

NOTES FOR DETAIL B:

(A) (2) 1½"C, 2 motor power and control cables (Pump L1 and L2).
(B) 1"C, 2 fiber optic float switch cables (LL and LH).
(C) 1"C, 1 level transducer cable with integral rigid breather tube.
(D) (2) 1½"C, 2 motor power and control cables (Pump R1 and R2).
(E) 1"C, 2 fiber optic float switch cables (RL and RH).
(F) 2 motor power and control cables (Pump L1 and L2).
(G) 2 fiber optic float switch cables (LL and LH).
(H) 1 level transducer cable with integral rigid breather tube.
(I) 2 motor power and control cables (Pump R1 and R2).
(J) 2 fiber optic float switch cables (RL and RH).

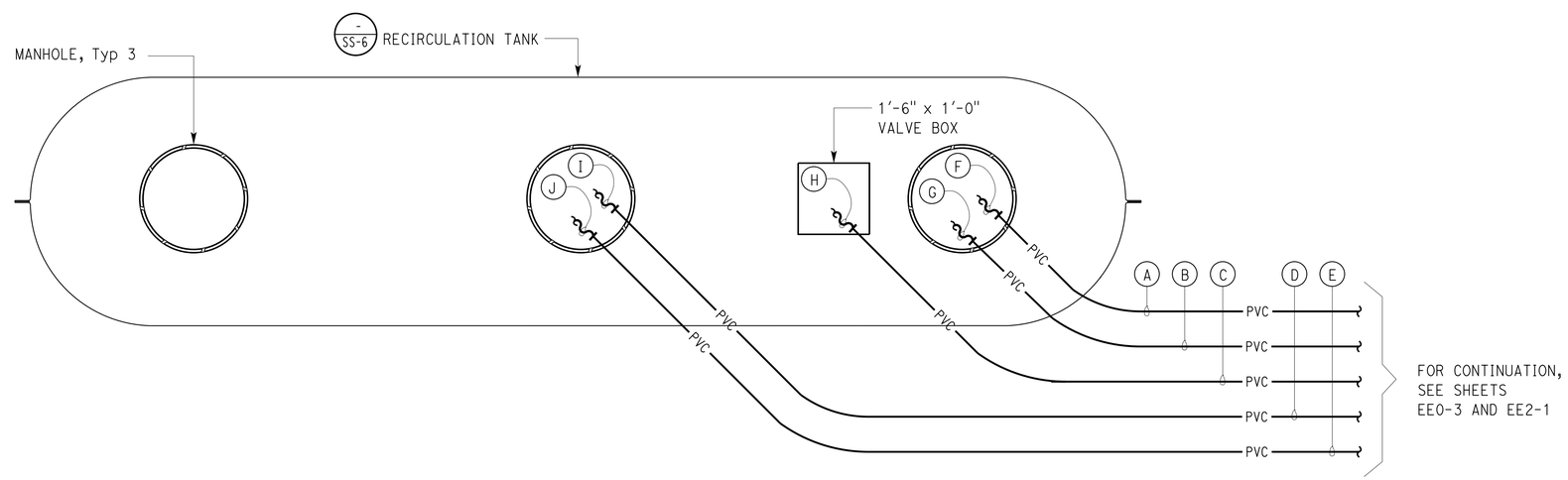

B PLAN
NO SCALE

DESIGN	BY Joseph Abdelsayed	CHECKED J.S. Sandhu	
DETAILS	BY Ed D. Tapalla 1/11	CHECKED Joseph Abdelsayed	
QUANTITIES	BY Joseph Abdelsayed	CHECKED J.S. Sandhu	

STATE OF CALIFORNIA DEPARTMENT OF TRANSPORTATION

DIVISION OF ENGINEERING SERVICES
ELECTRICAL-MECHANICAL-WATER AND WASTEWATER DESIGN

BRIDGE NO. 56R0003R/L
POST MILE R72.0

CACTUS CITY SAFETY ROADSIDE REST AREA WASTEWATER TREATMENT SYSTEM
EASTBOUND
SEPTIC TANK AND RECIRCULATION TANK DETAILS

SHEET **EE0-4**

TAEMWW Imperial Rev. 7/10

ORIGINAL SCALE IN INCHES FOR REDUCED PLANS 0 1 2 3

UNIT 3596
PROJECT NUMBER & PHASE 08000004441
EA 0L9000

DISREGARD PRINTS BEARING EARLIER REVISION DATES → 10/26/11 10/31/11 12/3/12

REVISION DATES (PRELIMINARY STAGE ONLY) SHEET OF

13-NOV-2013 06:01
ee0_04.dgn

DIST.	COUNTY	ROUTE	POST MILES TOTAL PROJECT	SHEET NO.	TOTAL SHEETS
08	Riv	10	R71.8/R72.3	31	38

Jaswinder S Sandhu 11-01-13
REGISTERED ELECTRICAL ENGINEER DATE

REGISTERED PROFESSIONAL ENGINEER
Jaswinder Sandhu
No. E 11803
Exp. 9-30-14
ELEC
STATE OF CALIFORNIA

11-12-13
PLANS APPROVAL DATE

The State of California or its officers or agents shall not be responsible for the accuracy or completeness of electronic copies of this plan sheet.

GENERAL NOTES:

1. Existing underground electrical conduits and conductors system as shown are diagrammatic and their location as shown is approximate only. Therefore, field verify exact location of existing underground facilities prior to the beginning of trenching and or removal work. The cost for existing underground utilities must be considered to be paid for in the building lump sump price, and no additional cost will be paid.

2. Not all electrical systems are shown on this plan for clarity.

NOTES:

(A) Aerator pump motor controller and timer - Remove.

(B) 1½"C, 3#10 (A14-16), 1#10G to aerator pump.

(C) ¾"C, 3#10, 1#10G. Remove conduit and conductors.

(D) Existing 1½"C, 3#3 (A18-20), 1#10G to Sewage Lift Station Control Panel.

(E) Utility conduit and conductors to Utility Service Pole.

(F) For continuation, see sheet EE0-2.

(G) Combination Meter and Service Disconnect, 200 A, 120/240 V, single phase.

(H) 2"C, 3#4/0, 1#2G.

(I) 2"C, 3#4 (A14-16), 1#8G.

(J) Existing 1½"C, intercept conduit, terminate on wall-mounted junction box, and install 3#4 (A14-16), 1#8G.

(K) For continuation, see sheet EE0-3.

(L) For work to be completed on existing Panel A, see sheet EE1-2.

(M) 1"C, low voltage conductors/cables as required for sludge sensor control unit.

CALIFORNIA STATE FIRE MARSHAL APPROVED
Approval of this plan does not authorize or approve any omission or deviation from applicable regulations. Final approval is subject to field inspection. One set of approved plans shall be available on the project site at all times.
Reviewed by: SM
SPENCER MEYER
Approval date: 11-07-13

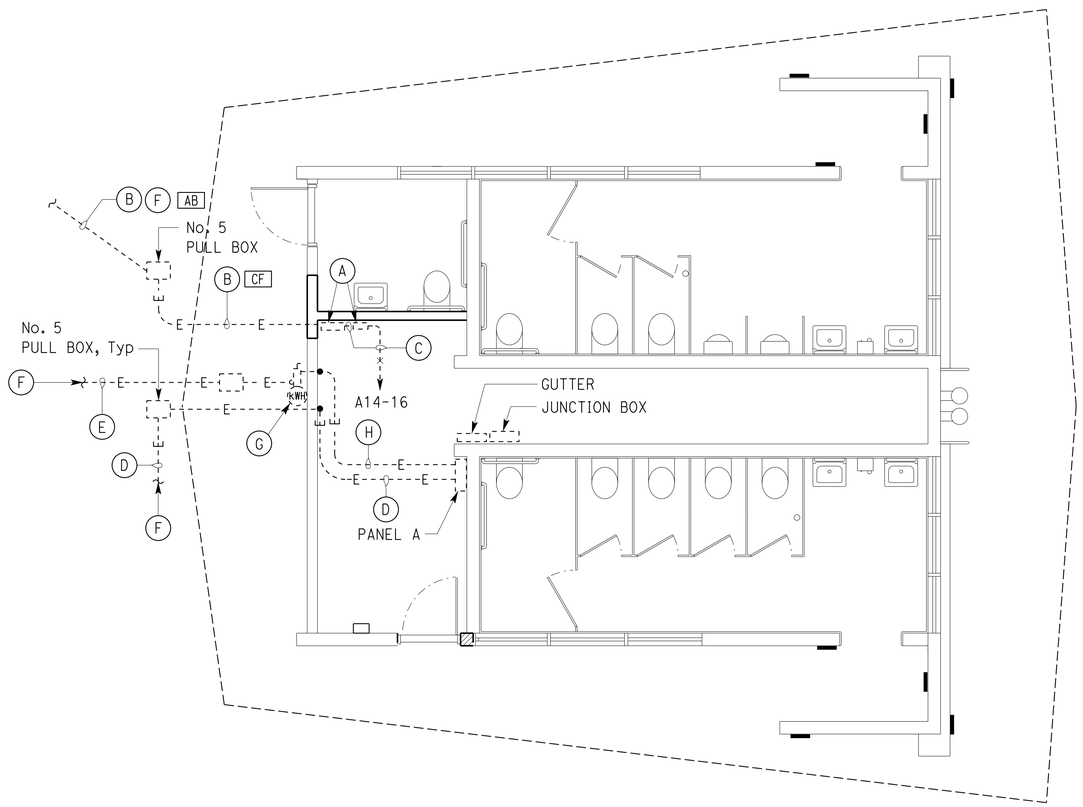

EXISTING

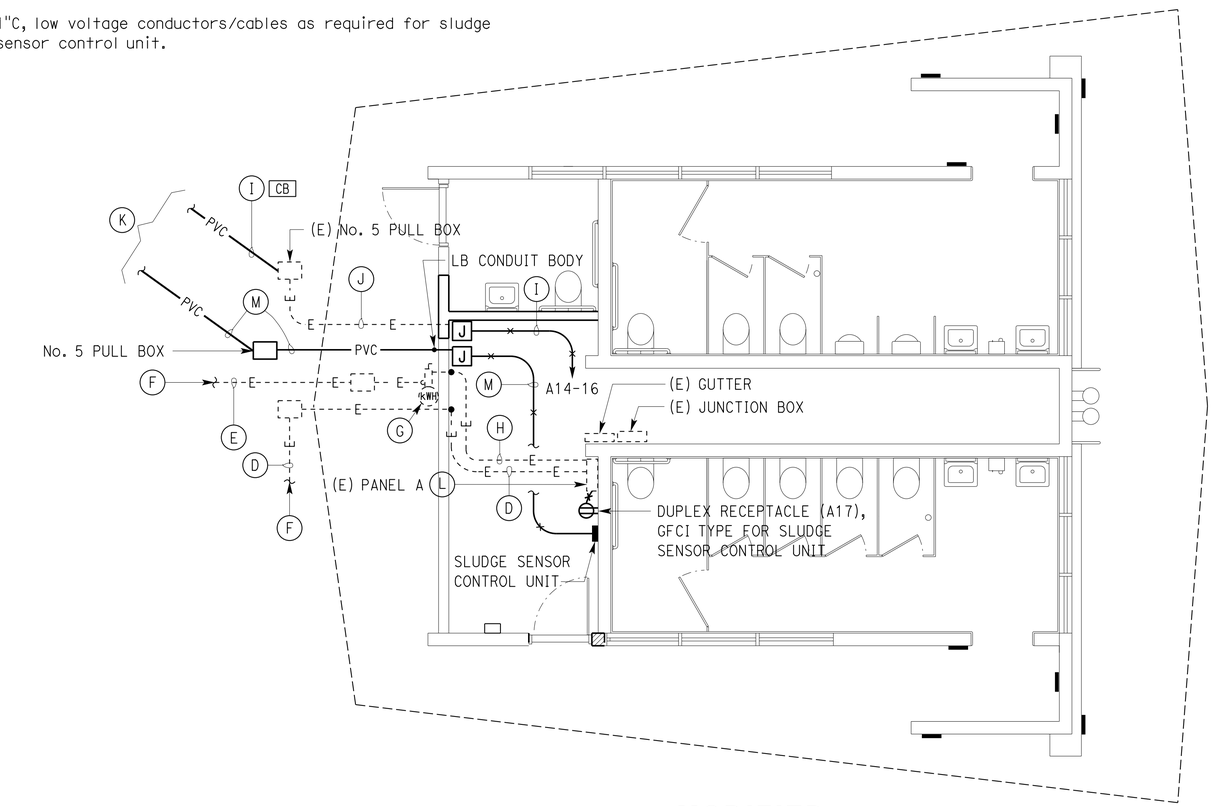

MODIFIED

PLAN
¼" = 1'-0"

DESIGN	BY Joseph Abdelsayed	CHECKED J.S. Sandhu	
DETAILS	BY Dali Zhou	CHECKED Joseph Abdelsayed	
QUANTITIES	BY Joseph Abdelsayed	CHECKED J.S. Sandhu	

STATE OF CALIFORNIA
DEPARTMENT OF TRANSPORTATION

DIVISION OF ENGINEERING SERVICES
ELECTRICAL-MECHANICAL-WATER AND WASTEWATER DESIGN

BRIDGE NO. 56R0003R/L
POST MILE R72.0

CACTUS CITY SAFETY ROADSIDE REST AREA WASTEWATER TREATMENT SYSTEM
EASTBOUND
POWER PLAN 1

SHEET **EE1-1**

TAEMWW Imperial Rev. 7/10

ORIGINAL SCALE IN INCHES FOR REDUCED PLANS 0 1 2 3

UNIT 3596
PROJECT NUMBER & PHASE 08000004441
EA 0L9000

DISREGARD PRINTS BEARING EARLIER REVISION DATES → 2/13/11 10/31/11 12/3/12

REVISION DATES (PRELIMINARY STAGE ONLY) SHEET OF

13-NOV-2013 06:01
ee1_01.dgn

DIST.	COUNTY	ROUTE	POST MILES TOTAL PROJECT	SHEET NO.	TOTAL SHEETS
08	Riv	10	R71.8/R72.3	32	38

REGISTERED ELECTRICAL ENGINEER — 11-01-13 DATE

REGISTERED PROFESSIONAL ENGINEER — Jaswinder Sandhu — No. E 11803 — Exp. 9-30-14 — ELEC — STATE OF CALIFORNIA

11-12-13
PLANS APPROVAL DATE

The State of California or its officers or agents shall not be responsible for the accuracy or completeness of electronic copies of this plan sheet.

CALIFORNIA STATE FIRE MARSHAL APPROVED
Approval of this plan does not authorize or approve any omission or deviation from applicable regulations. Final approval is subject to field inspection. One set of approved plans shall be available on the project site at all times.
Reviewed by: SPENCER MEYER
Approval date: 11-07-13

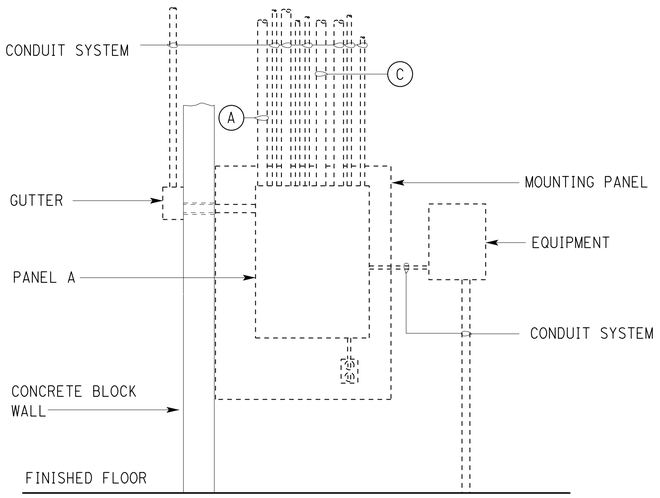

EXISTING

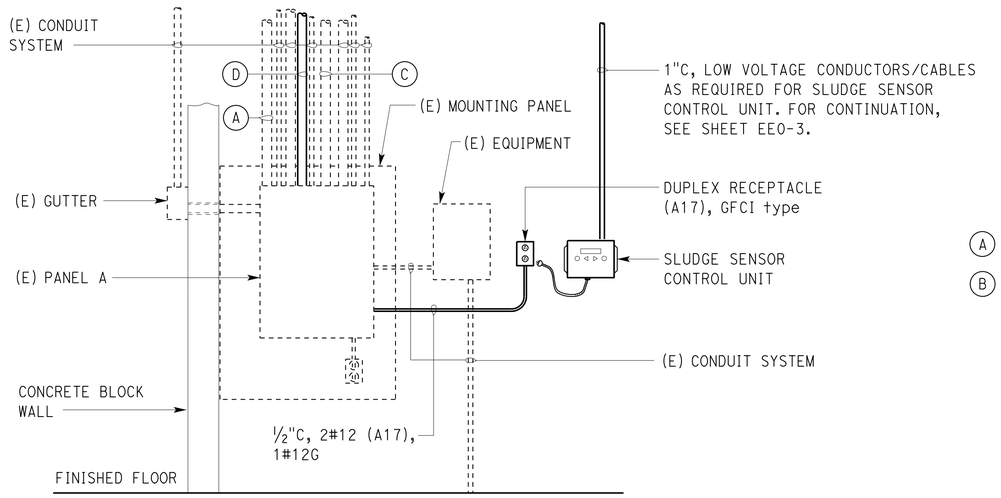

MODIFIED

ELEVATION

NO SCALE

Notes:

(A) Existing 2"C, 3#4/0, 1#2G to combination meter and service disconnect.

(B) Existing panelboard is General Electric A-Series panel board, Catalog No. AF37S, 200 A, 240/120 V, single-phase with 30 circuits as shown. Perform the following at the panelboard:

- Remove 20 A, 2-pole circuit breaker from spaces 14-16.
- Reinstall the existing 20 A, 2-pole circuit breaker at spaces 28-30 for future use.
- Install new 50 A, 2-pole circuit breaker in space 14-16 and terminate the new Recirculation and Leachfield Pumps Control Station ungrounded circuit conductors at the new circuit breaker.
- Utilize existing 15 A, single pole circuit breaker in space 17 for the sludge sensor control unit receptacle.

(C) Existing 1½"C, 3#3 (A18-20), 1#10G to sewage lift station control panel. For continuation, see sheet EE0-2.

(D) 2"C, 3#4 (A14-16), 1#8G to Recirculation and Leachfield Pumps Control Station. For continuation, see sheet EE0-3.

MAIN: 200 A/2P CB — FEEDER SIZE: 2"C, 3#4/0, 1#2G
VOLTS: 120/240 V, SINGLE PHASE, 3-WIRE — PANEL A (EASTBOUND) (B) — LOCATION: UTILITY ROOM

DESCRIPTION	AMPERES A	AMPERES C	BRK	CKT	A C	CKT	BRK	AMPERES A	AMPERES C	DESCRIPTION
LIGHTS- BUILDING EXTERIOR	3.5		15/1	1		2	20/1	5		MONITORING EQUIPMENT
SPRINKLER CONTROLLER		1	15/1	3		4	*20/1		4.5	RECEPTACLE- UTILITY ROOM
RECEPTACLE- WATER COOLER	6		20/1	5		6	20/2	5		AREA LIGHTS
LIGHTS- MEN, WOMEN, UTILITY		6.7	20/1	7		8			5	
AIR VOLUME CONTROL UNIT	1		20/1	9		10	20/1	16		HAND DRYER-MEN
EXHAUST FAN-MEN		4.4	15/1	11		12	20/1		16	HAND DRYER-WOMEN
EXHAUST FAN-WOMEN, UTLITY ROOM	8.8		15/1	13		14	20/2	12		AERATOR PUMP
RECEPTACLE- UTILITY		6	20/1	15		16			12	
SPARE	-		15/1	17		18	30/2	24		SEWAGE LIFT STATION
HIGHWAY LIGHTING		5	30/2	19		20			24	
	5			21		22	-	-		SPACE
STORAGE BUILDING (PANEL S)		3	60/2	23		24	20/1		16	HAND DRYER-AUXILIARY RESTROOM
	7.5			25		26	-	-		SPACE
SPACE		-	-	27		28	-		-	SPACE
SPACE	-		-	29		30	-	-		SPACE

* GFCI TYPE CIRCUIT BREAKER

A	C	
93.8	103.6	TOTAL AMPERES PER PHASE

EXISTING

MAIN: 200 A/2P CB — FEEDER SIZE: 2"C, 3#4/0, 1#2G
VOLTS: 120/240 V, SINGLE PHASE, 3-WIRE — PANEL A (EASTBOUND) (B) — LOCATION: UTILITY ROOM

DESCRIPTION	AMPERES A	AMPERES C	BRK	CKT	A C	CKT	BRK	AMPERES A	AMPERES C	DESCRIPTION
LIGHTS- BUILDING EXTERIOR	3.5		15/1	1		2	20/1	5		MONITORING EQUIPMENT
SPRINKLER CONTROLLER		1	15/1	3		4	*20/1		4.5	RECEPT- UTILITY ROOM
RECEPTACLE- WATER COOLER	6		20/1	5		6	20/2	5		AREA LIGHTS
LIGHTS- MEN, WOMEN, UTILITY		6.7	20/1	7		8			5	
AIR VOLUME CONTROL UNIT	1		20/1	9		10	20/1	16		HAND DRYER-MEN
EXHAUST FAN-MEN		4.4	15/1	11		12	20/1		16	HAND DRYER-WOMEN
EXHAUST FAN-WOMEN, UTLITY ROOM	8.8		15/1	13		14	**50/2**	**30**		**RECIRCULATION & LEACHFIELD PUMP CONTROL PANEL STATION**
RECEPTACLE- UTILITY		6	20/1	15		16			**30**	
SLUDGE SENSOR CONTROL UNIT	**5**		15/1	17		18	30/2	24		SEWAGE LIFT STATION
HIGHWAY LIGHTING		5	30/2	19		20			24	
	5			21		22	-	-		SPACE
STORAGE BUILDING (PANEL S)		3	60/2	23		24	20/1		16	HAND DRYER-AUXILIARY RESTROOM
	7.5			25		26	-	-		SPACE
SPACE		-	-	27		28	20/2		-	SPARE
	-			29		30		-		

* GFCI TYPE CIRCUIT BREAKER

A	C	
116.8	121.6	TOTAL AMPERES PER PHASE

MODIFIED

PANEL SCHEDULE

DESIGN	BY Joseph Abdelsayed	CHECKED J.S. Sandhu	
DETAILS	BY Dali Zhou	CHECKED Joseph Abdelsayed	
QUANTITIES	BY Joseph Abdelsayed	CHECKED J.S. Sandhu	

STATE OF CALIFORNIA DEPARTMENT OF TRANSPORTATION

DIVISION OF ENGINEERING SERVICES
ELECTRICAL-MECHANICAL-WATER AND WASTEWATER DESIGN

BRIDGE NO. 56R0003R/L
POST MILE R72.0

CACTUS CITY SAFETY ROADSIDE REST AREA WASTEWATER TREATMENT SYSTEM
EASTBOUND — POWER PLAN 2

SHEET EE1-2

TAEMWW Imperial Rev. 7/10

ORIGINAL SCALE IN INCHES FOR REDUCED PLANS 0 1 2 3

UNIT 3596
PROJECT NUMBER & PHASE 08000004441
EA 0L9000

DISREGARD PRINTS BEARING EARLIER REVISION DATES → 2/18/11 10/31/11 12/3/12

REVISION DATES (PRELIMINARY STAGE ONLY) SHEET OF

13-NOV-2013 06:01
ee1_02.dgn

DIST.	COUNTY	ROUTE	POST MILES TOTAL PROJECT	SHEET NO.	TOTAL SHEETS
08	Riv	10	R71.8/R72.3	33	38

Jaswinder S Sandhu 11-01-13
REGISTERED ELECTRICAL ENGINEER DATE

REGISTERED PROFESSIONAL ENGINEER Jaswinder Sandhu No. E 11803 Exp. 9-30-14 ELEC STATE OF CALIFORNIA

11-12-13
PLANS APPROVAL DATE

The State of California or its officers or agents shall not be responsible for the accuracy or completeness of electronic copies of this plan sheet.

CALIFORNIA STATE FIRE MARSHAL APPROVED
Approval of this plan does not authorize or approve any omission or deviation from applicable regulations. Final approval is subject to field inspection. One set of approved plans shall be available on the project site at all times.
Reviewed by: SPENCER MEYER
Approval date: 11-07-13

NOTES:

(A) 1"C, 4 fiber optic patch cords, 3#16 for level transducer, and 4#16 spare. Fiber optic patch cord must have the same characteristics as the fiber optic float switch cable.

(B) 1"C, 4 fiber optic patch cords. Fiber optic patch cord must have the same characteristics as the fiber optic float switch cable.

(C) Splice fiber optic float switch cables to fiber optic patch cords inside enclosure using approved splicing method. Terminate level transducer cable on terminal blocks as recommended by the manufacturer. Terminate breather tube as recommended by the manufacturer. Provide appropriate desiccant bag at the termination of the breather tube.

(D) Weatherproof NEMA-4 enclosure box with hinged cover. Install terminal blocks for terminating all conductors/cables. Size box as required for installing terminal blocks, conduits and conductors/cables.

(E) Splice fiber optic float switch cables to fiber optic patch cords inside junction box using approved splicing method.

(F) Do not terminate or run conductors having more than 24-Volt, AC or DC, thru the 24 V control section. Provide glued on nameplates for all devices mounted on the back of the hinged interior door. For example, nameplate for item No. 16 on the back of interior door shall read "PL0".

(G) Install Arc Flash Hazard Warning label, see Sheet EE2-2 for details.

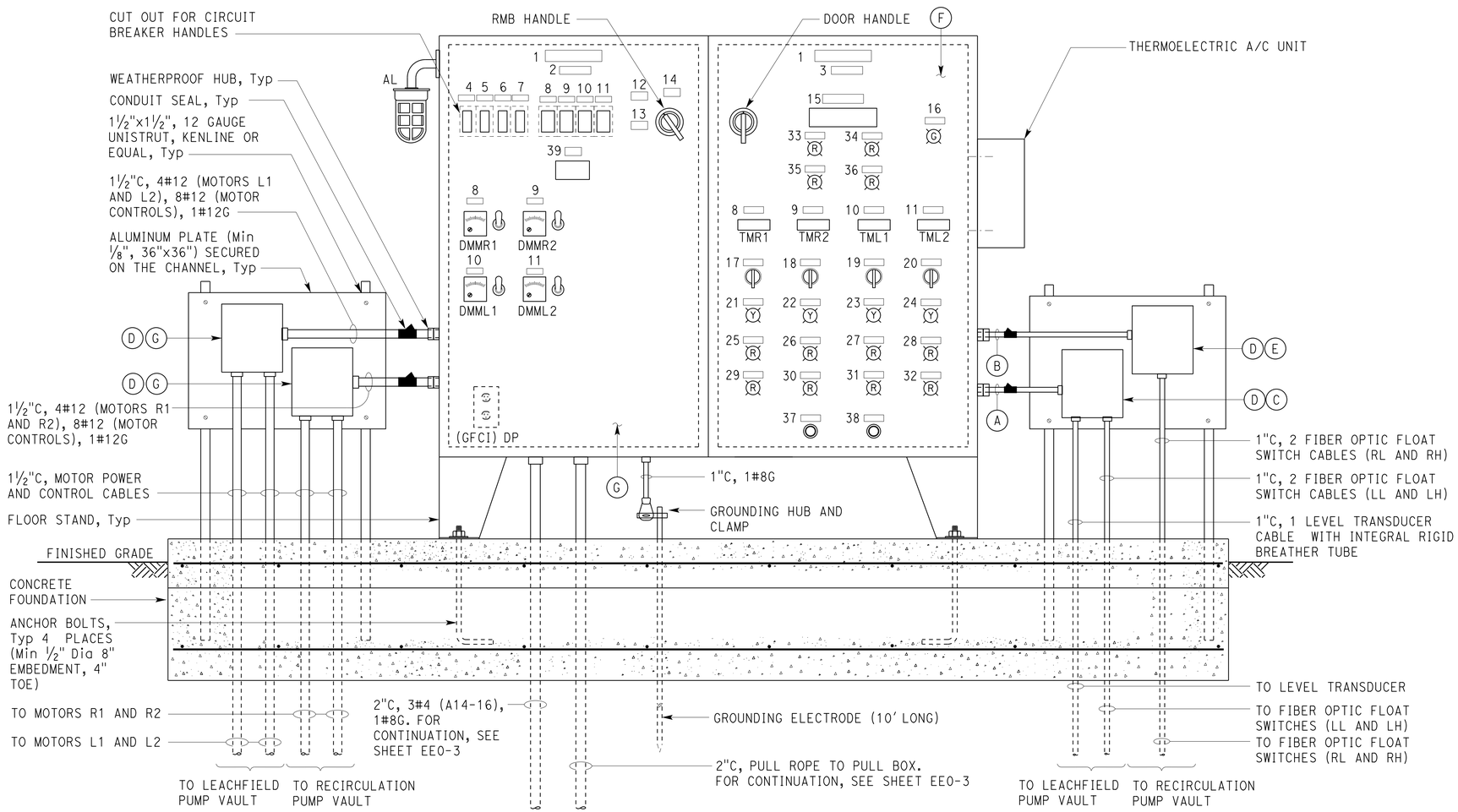

ELEVATION

NO SCALE

(HINGED EXTERIOR DOORS AND SUN SHADES ARE NOT SHOWN)

NAMEPLATE SCHEDULE

ITEM No.	INSCRIPTION	LETTER HEIGHT (INCH)
1	RECIRCULATION AND LEACHFIELD CONTROL STATION	½
2	POWER SECTION	⅛
3	CONTROL SECTION	
4	CONTROL	
5	DUPLEX RECEPTACLE	
6	AIR CONDITIONER	
7	SPARE	
8	PUMP R1	
9	PUMP R2	
10	PUMP L1	
11	PUMP L2	
12	ON	
13	OFF	
14	MAIN	
15	LEACHFIELD TANK WATER LEVEL	
16	CONTROL POWER ON	
17	SSR1	
18	SSR2	
19	SSL1	
20	SSL2	
21	PUMP R1 RUN	
22	PUMP R2 RUN	
23	PUMP L1 RUN	
24	PUMP L2 RUN	
25	PUMP R1 SEAL FAILURE	
26	PUMP R2 SEAL FAILURE	
27	PUMP L1 SEAL FAILURE	
28	PUMP L2 SEAL FAILURE	
29	PUMP R1 FAIL	
30	PUMP R2 FAIL	
31	PUMP L1 FAIL	
32	PUMP L2 FAIL	
33	LEACHFIELD LOW WATER	
34	LEACHFIELD HIGH WATER	
35	RECIRCULATION LOW WATER	
36	RECIRCULATION HIGH WATER	
37	ALARM TEST	
38	ALARM RESET	
	WARNING NAMEPLATE	
39	PUMP DISCONNECT DOES NOT OPEN CONTROL CIRCUIT	¼

DESIGN	BY Joseph Abdelsayed	CHECKED J.S. Sandhu	
DETAILS	BY Ed D. Tapalla 1/11	CHECKED Joseph Abdelsayed	
QUANTITIES	BY Joseph Abdelsayed	CHECKED J.S. Sandhu	

STATE OF CALIFORNIA
DEPARTMENT OF TRANSPORTATION

DIVISION OF ENGINEERING SERVICES
ELECTRICAL-MECHANICAL-WATER AND WASTEWATER DESIGN

BRIDGE NO. 56R0003R/L
POST MILE R72.0

CACTUS CITY SAFETY ROADSIDE REST AREA WASTEWATER TREATMENT SYSTEM
RECIRCULATION AND LEACHFIELD CONTROL STATION DETAILS 1

SHEET **EE2-1**

TAEMWW Imperial Rev. 7/10

ORIGINAL SCALE IN INCHES FOR REDUCED PLANS 0 1 2 3

UNIT 3596
PROJECT NUMBER & PHASE 08000004441
EA 0L9000

DISREGARD PRINTS BEARING EARLIER REVISION DATES
REVISION DATES (PRELIMINARY STAGE ONLY) 1/4/11 10/31/11 12/3/12
SHEET OF

13-NOV-2013 06:01
ee2_01.dgn

DIST.	COUNTY	ROUTE	POST MILES TOTAL PROJECT	SHEET NO.	TOTAL SHEETS
08	Riv	10	R71.8/R72.3	34	38

Jaswinder S Sandhu 11-01-13
REGISTERED ELECTRICAL ENGINEER DATE

REGISTERED PROFESSIONAL ENGINEER Jaswinder Sandhu No. E 11803 Exp. 9-30-14 ELEC STATE OF CALIFORNIA

11-12-13
PLANS APPROVAL DATE

The State of California or its officers or agents shall not be responsible for the accuracy or completeness of electronic copies of this plan sheet.

CALIFORNIA STATE FIRE MARSHAL APPROVED
Approval of this plan does not authorize or approve any omission or deviation from applicable regulations. Final approval is subject to field inspection. One set of approved plans shall be available on the project site at all times.
Reviewed by: SPENCER MEYER
Approval date: 11-07-13

GENERAL NOTE:

1. Nameplate shall be the identifying name or symbol for the device or component. For example, nameplate for RMB on the interior mounting panel shall be RMB.

NOTE:

(A) Install Arc Flash Hazard Warning label.

(B) Warning label must be constructed with high degree of chemical abrasion, heat resistance and UL recognized material.

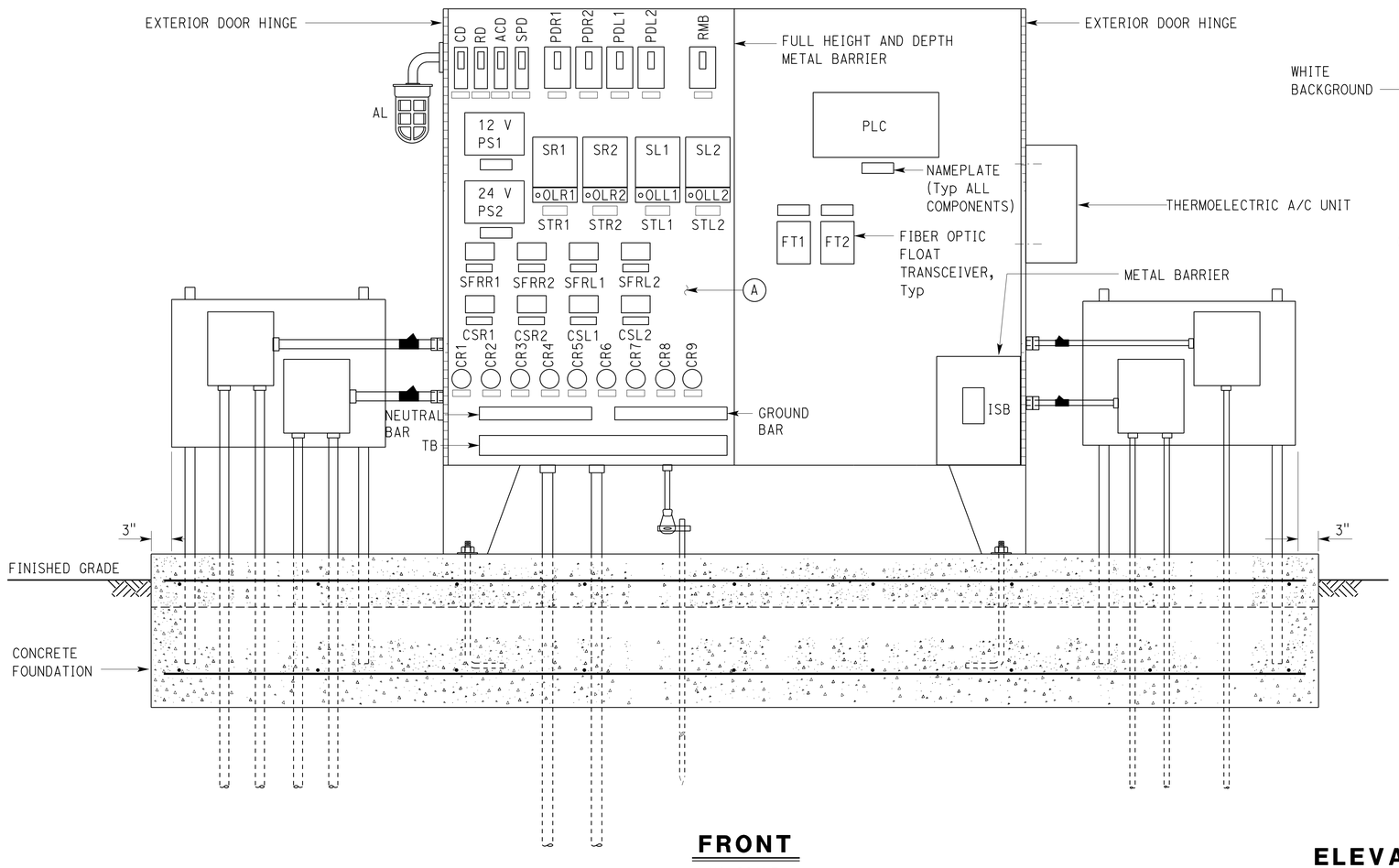

FRONT

NO SCALE

(HINGED INTERIOR DOORS, HINGED EXTERIOR DOORS AND SUN SHADES ARE NOT SHOWN)

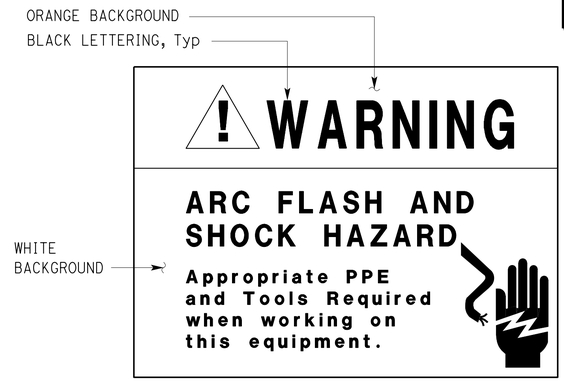

(B) ARC FLASH HAZARD WARNING LABEL

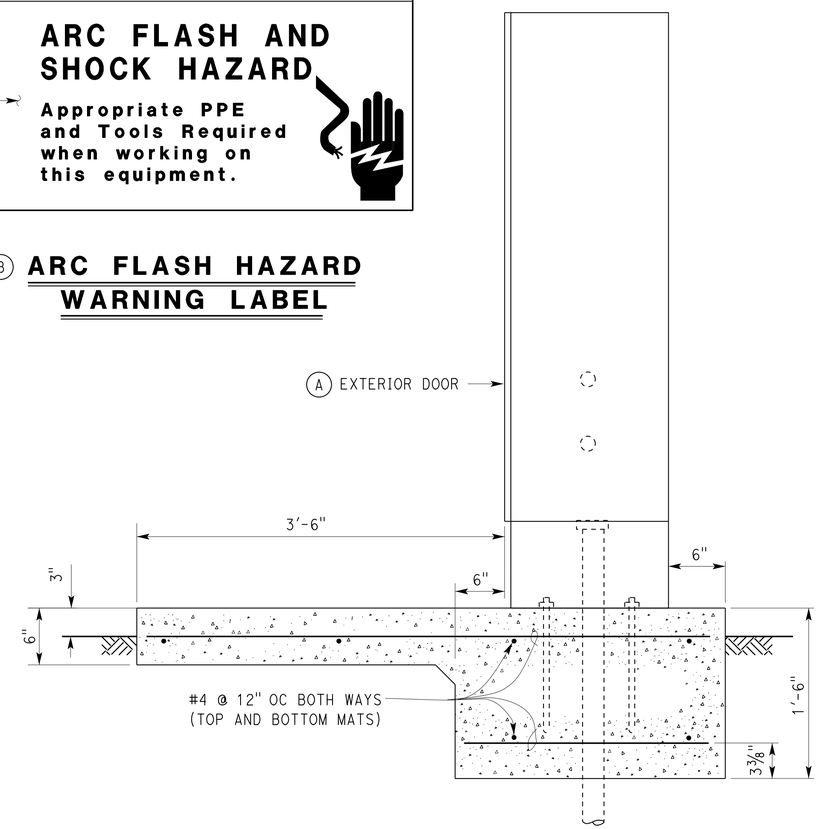

ELEVATION

NO SCALE

SIDE

NO SCALE

(WEATHERPROOF ENCLOSURE, A/C AND SUN SHADES NOT SHOWN FOR CLARITY)

DESIGN	BY Joseph Abdelsayed	CHECKED J.S. Sandhu	
DETAILS	BY Ed D. Tapalla 1/11	CHECKED Joseph Abdelsayed	
QUANTITIES	BY Joseph Abdelsayed	CHECKED J.S. Sandhu	

STATE OF CALIFORNIA
DEPARTMENT OF TRANSPORTATION

DIVISION OF ENGINEERING SERVICES
ELECTRICAL-MECHANICAL-WATER AND WASTEWATER DESIGN

BRIDGE NO. 56R0003R/L
POST MILE R72.0

CACTUS CITY SAFETY ROADSIDE REST AREA WASTEWATER TREATMENT SYSTEM
RECIRCULATION AND LEACHFIELD CONTROL STATION DETAILS 2

SHEET **EE2-2**

TAEMWW Imperial Rev. 7/10

ORIGINAL SCALE IN INCHES FOR REDUCED PLANS 0 1 2 3

UNIT 3596
PROJECT NUMBER & PHASE 08000004441
EA 0L9000

DISREGARD PRINTS BEARING EARLIER REVISION DATES → REVISION DATES (PRELIMINARY STAGE ONLY) 1/6/11 10/31/11 12/3/12 SHEET OF

13-NOV-2013 06:01
ee2_02.dgn

DIST.	COUNTY	ROUTE	POST MILES TOTAL PROJECT	SHEET NO.	TOTAL SHEETS
08	Riv	10	R71.8/R72.3	35	38

REGISTERED ELECTRICAL ENGINEER — DATE 11-01-13

REGISTERED PROFESSIONAL ENGINEER — Jaswinder Sandhu — No. E 11803 — Exp. 9-30-14 — ELEC — STATE OF CALIFORNIA

11-12-13
PLANS APPROVAL DATE

The State of California or its officers or agents shall not be responsible for the accuracy or completeness of electronic copies of this plan sheet.

CALIFORNIA STATE FIRE MARSHAL APPROVED

Approval of this plan does not authorize or approve any omission or deviation from applicable regulations. Final approval is subject to field inspection. One set of approved plans shall be available on the project site at all times.

Reviewed by: SPENCER MEYER
Approval date: 11-07-13

* Rating of fuse must be as recommended by the manufacturer of the digital multimeter.

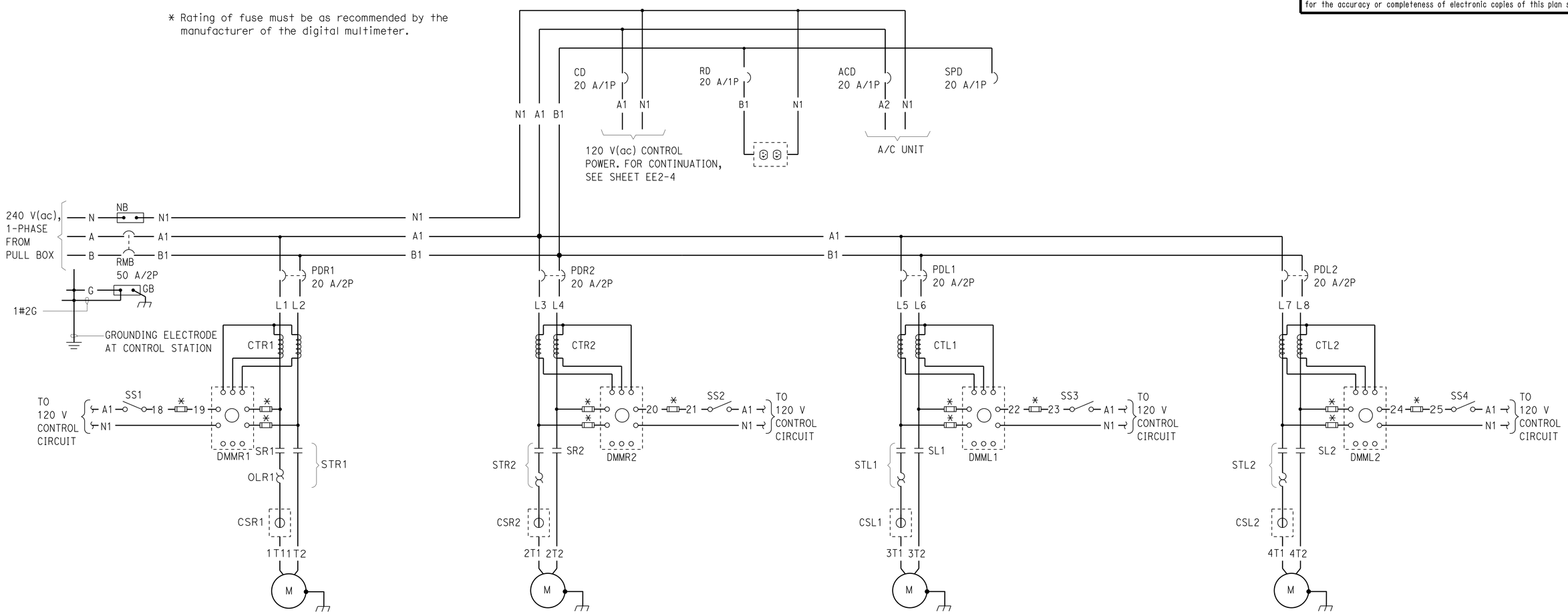

POWER SCHEMATIC DIAGRAM

DESIGN	BY Joseph Abdelsayed	CHECKED J.S. Sandhu	
DETAILS	BY Ed D. Tapalla 1/11	CHECKED Joseph Abdelsayed	
QUANTITIES	BY Joseph Abdelsayed	CHECKED J.S. Sandhu	

STATE OF CALIFORNIA
DEPARTMENT OF TRANSPORTATION

DIVISION OF ENGINEERING SERVICES
ELECTRICAL-MECHANICAL-WATER AND WASTEWATER DESIGN

BRIDGE NO. 56R0003R/L
POST MILE R72.0

CACTUS CITY SAFETY ROADSIDE REST AREA
WASTEWATER TREATMENT SYSTEM
RECIRCULATION AND LEACHFIELD
CONTROL STATION POWER SCHEMATIC DIAGRAM

SHEET **EE2-3**

TAEMWW Imperial Rev. 7/10

ORIGINAL SCALE IN INCHES FOR REDUCED PLANS 0 1 2 3

UNIT 3596
PROJECT NUMBER & PHASE 08000004441
EA 0L9000

DISREGARD PRINTS BEARING EARLIER REVISION DATES → 1/5/11 10/31/11 12/3/12

REVISION DATES (PRELIMINARY STAGE ONLY) SHEET OF

13-NOV-2013 06:01

ee2_03.dgn

DIST.	COUNTY	ROUTE	POST MILES TOTAL PROJECT	SHEET NO.	TOTAL SHEETS
08	Riv	10	R71.8/R72.3	36	38

Jaswinder S Sandhu 11-01-13
REGISTERED ELECTRICAL ENGINEER DATE

REGISTERED PROFESSIONAL ENGINEER Jaswinder Sandhu No. E 11803 Exp. 9-30-14 ELEC STATE OF CALIFORNIA

11-12-13
PLANS APPROVAL DATE

The State of California or its officers or agents shall not be responsible for the accuracy or completeness of electronic copies of this plan sheet.

CALIFORNIA STATE FIRE MARSHAL APPROVED
Approval of this plan does not authorize or approve any omission or deviation from applicable regulations. Final approval is subject to field inspection. One set of approved plans shall be available on the project site at all times.
Reviewed by: SPENCER MEYER
Approval date: 11-07-13

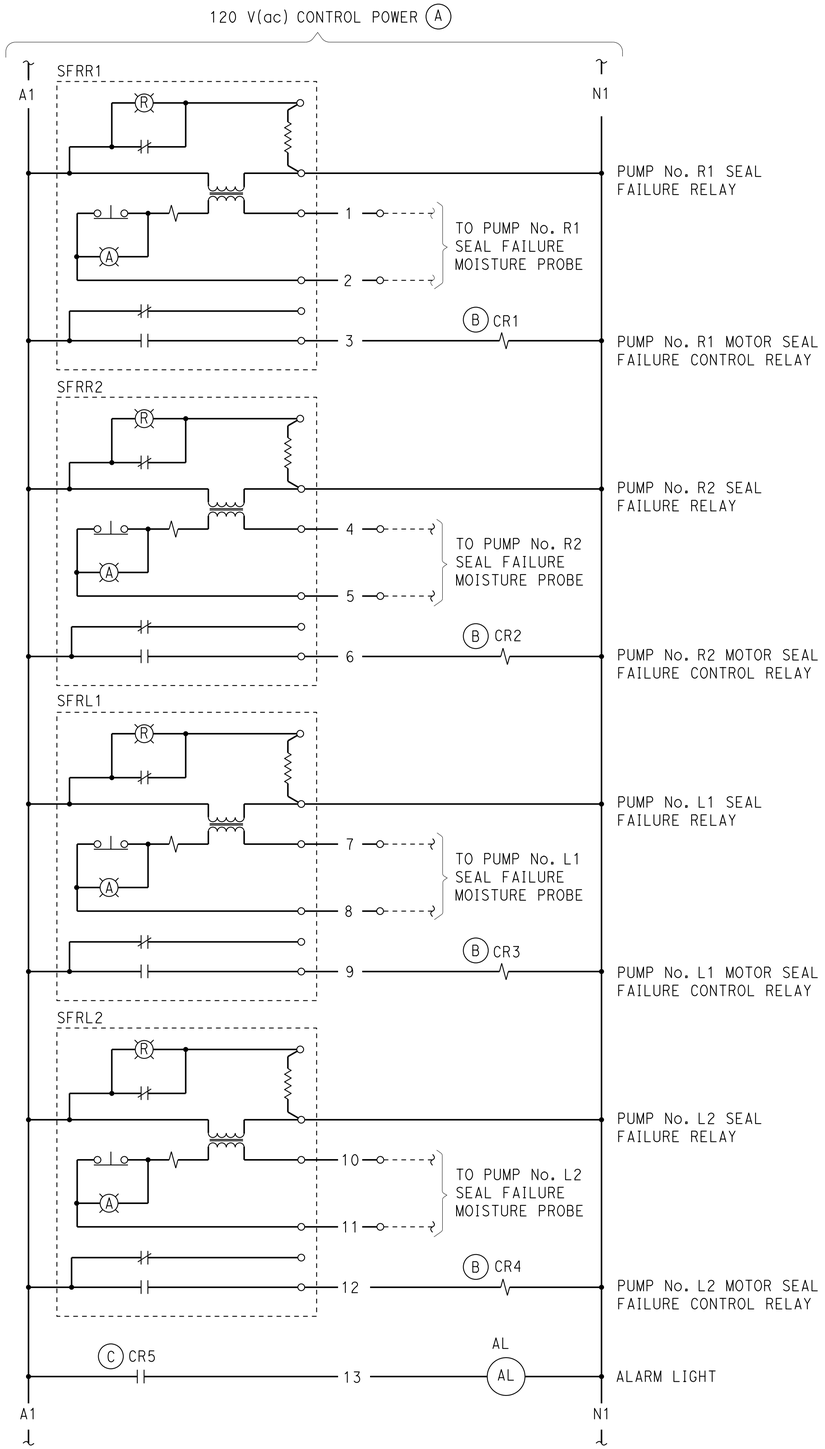

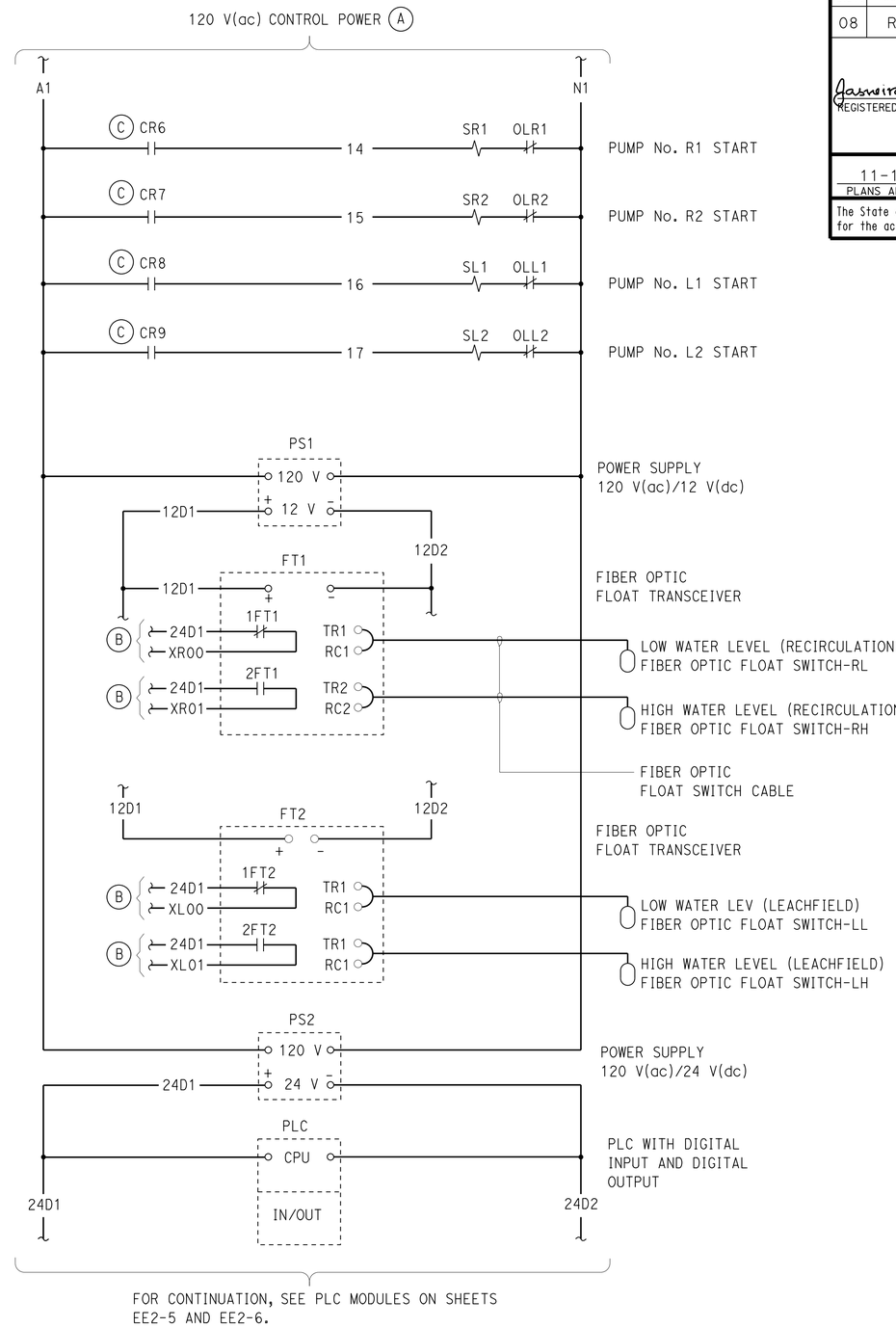

Notes:

(A) For continuation, see Recirculation and Leachfield Control Station Power Schematic Diagram, on sheet EE2-3.

(B) For connection to PLC, see PLC Digital Input Modules on sheet EE2-5.

(C) For connection to PLC, see PLC Digital Output Modules on sheet EE2-6.

CONTROL SCHEMATIC DIAGRAM

DESIGN	BY Joseph Abdelsayed	CHECKED J.S. Sandhu	
DETAILS	BY Ed D. Tapalla 1/11	CHECKED Joseph Abdelsayed	
QUANTITIES	BY Joseph Abdelsayed	CHECKED J.S. Sandhu	

STATE OF CALIFORNIA
DEPARTMENT OF TRANSPORTATION

DIVISION OF ENGINEERING SERVICES
ELECTRICAL-MECHANICAL-WATER AND WASTEWATER DESIGN

BRIDGE NO. 56R0003R/L
POST MILE R72.0

CACTUS CITY SAFETY ROADSIDE REST AREA WASTEWATER TREATMENT SYSTEM
RECIRCULATION AND LEACHFIELD PUMPS CONTROL STATION CONTROL SCHEMATIC DIAGRAM 1

SHEET **EE2-4**

TAEMWW Imperial Rev. 7/10

ORIGINAL SCALE IN INCHES FOR REDUCED PLANS 0 1 2 3

UNIT 3596
PROJECT NUMBER & PHASE 08000004441
EA 0L9000

DISREGARD PRINTS BEARING EARLIER REVISION DATES
REVISION DATES (PRELIMINARY STAGE ONLY) 1/4/11 10/24/11 12/3/12
SHEET OF

13-NOV-2013 06:01
ee2_04.dgn

DIST.	COUNTY	ROUTE	POST MILES TOTAL PROJECT	SHEET NO.	TOTAL SHEETS
08	Riv	10	R71.8/R72.3	37	38

CALIFORNIA STATE FIRE MARSHAL APPROVED
Approval of this plan does not authorize or approve any omission or deviation from applicable regulations. Final approval is subject to field inspection. One set of approved plans shall be available on the project site at all times.
Reviewed by: SPENCER MEYER
Approval date: 11-07-13

Jaswinder S Sandhu 11-01-13
REGISTERED ELECTRICAL ENGINEER DATE

REGISTERED PROFESSIONAL ENGINEER Jaswinder Sandhu No. E 11803 Exp. 9-30-14 ELEC STATE OF CALIFORNIA

11-12-13
PLANS APPROVAL DATE

The State of California or its officers or agents shall not be responsible for the accuracy or completeness of electronic copies of this plan sheet.

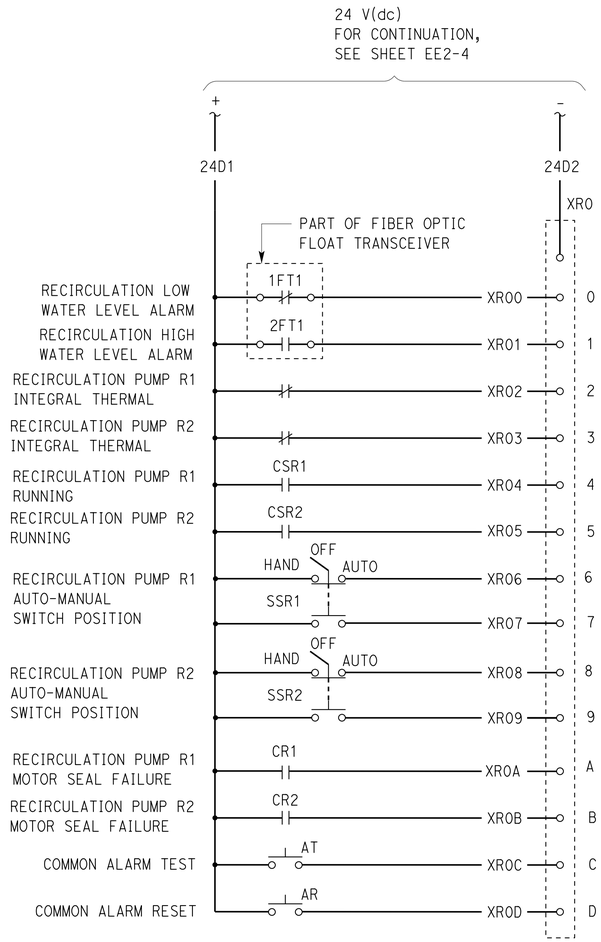

(A) PLC DIGITAL INPUT MODULES

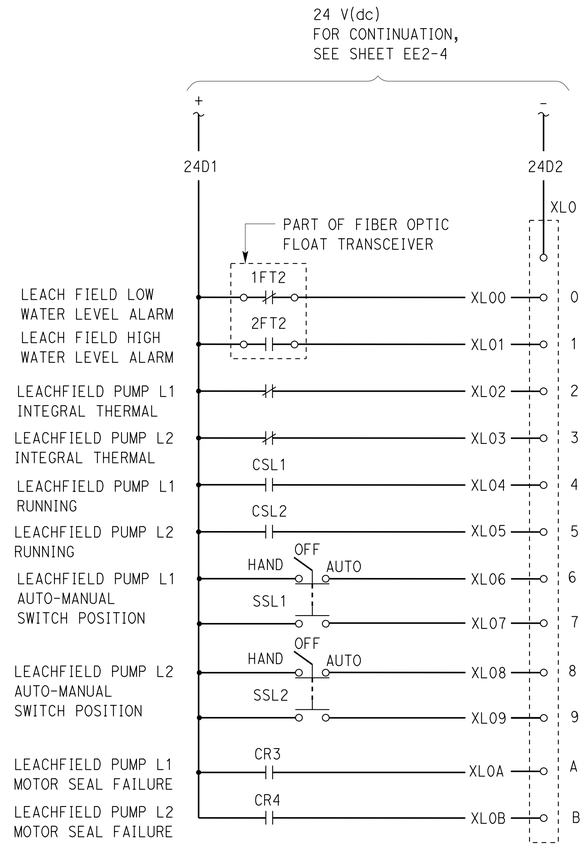

(B) PLC DIGITAL INPUT MODULES

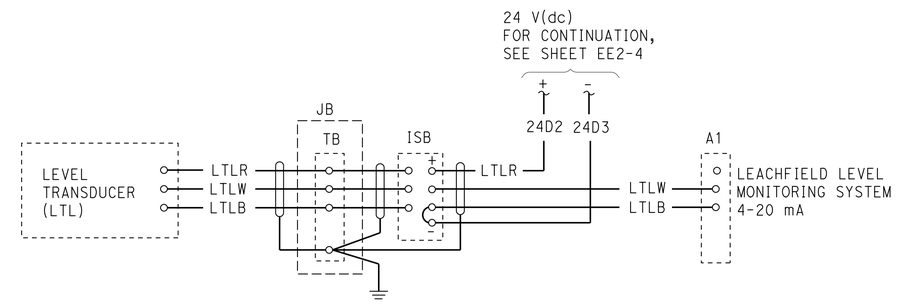

(C) PLC ANALOG INPUT MODULES

DESIGN	BY Joseph Abdelsayed	CHECKED J.S. Sandhu	
DETAILS	BY Ed D. Tapalla 1/11	CHECKED Joseph Abdelsayed	
QUANTITIES	BY Joseph Abdelsayed	CHECKED J.S. Sandhu	

STATE OF CALIFORNIA
DEPARTMENT OF TRANSPORTATION

DIVISION OF ENGINEERING SERVICES
ELECTRICAL-MECHANICAL-WATER AND WASTEWATER DESIGN

BRIDGE NO. 56R0003R/L
POST MILE R72.0

CACTUS CITY SAFETY ROADSIDE REST AREA WASTEWATER TREATMENT SYSTEM
RECIRCULATION AND LEACHFIELD PUMPS CONTROL STATION CONTROL SCHEMATIC DIAGRAM 2

SHEET **EE2-5**

TAEMWW Imperial Rev. 7/10

ORIGINAL SCALE IN INCHES FOR REDUCED PLANS 0 1 2 3

UNIT 3596
PROJECT NUMBER & PHASE 08000004441
EA 0L9000

DISREGARD PRINTS BEARING EARLIER REVISION DATES
REVISION DATES (PRELIMINARY STAGE ONLY) 1/6/11 10/31/11 12/3/12
SHEET OF

13-NOV-2013 06:01
ee2_05.dgn

DIST.	COUNTY	ROUTE	POST MILES TOTAL PROJECT	SHEET NO.	TOTAL SHEETS
08	Riv	10	R71.8/R72.3	38	38

Jaswinder S Sandhu 11-01-13
REGISTERED ELECTRICAL ENGINEER DATE

REGISTERED PROFESSIONAL ENGINEER Jaswinder Sandhu No. E 11803 Exp. 9-30-14 ELEC STATE OF CALIFORNIA

11-12-13
PLANS APPROVAL DATE

The State of California or its officers or agents shall not be responsible for the accuracy or completeness of electronic copies of this plan sheet.

CALIFORNIA STATE FIRE MARSHAL APPROVED
Approval of this plan does not authorize or approve any omission or deviation from applicable regulations. Final approval is subject to field inspection. One set of approved plans shall be available on the project site at all times.
Reviewed by: SPENCER MEYER
Approval date: 11-07-13

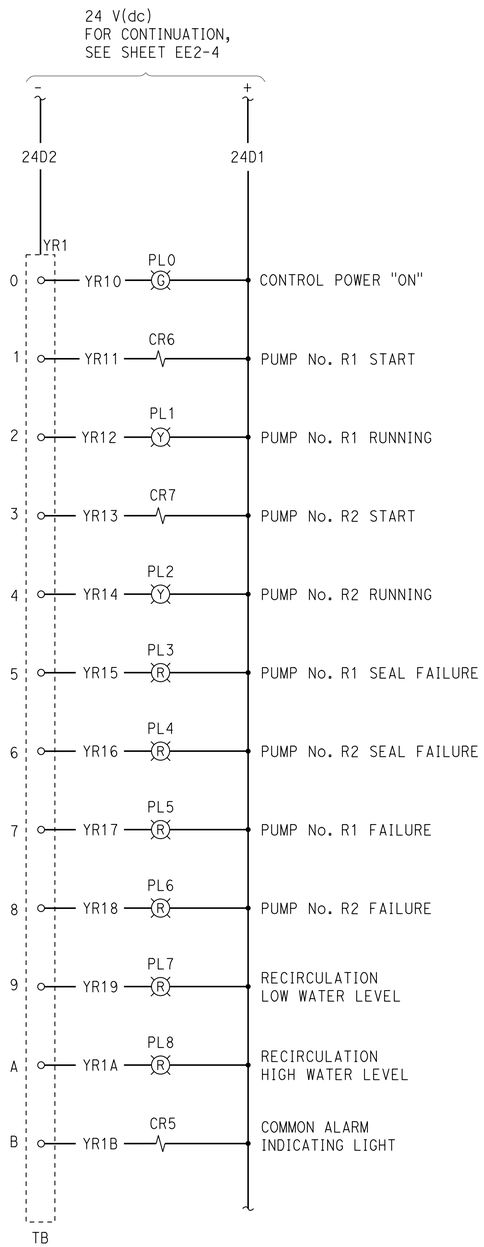

A PLC DIGITAL OUTPUT MODULES

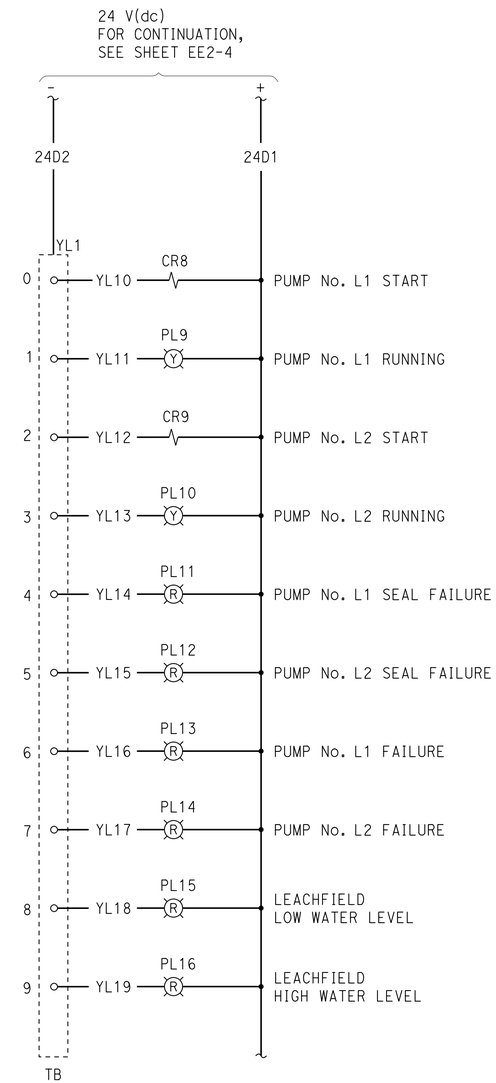

B PLC DIGITAL OUTPUT MODULES

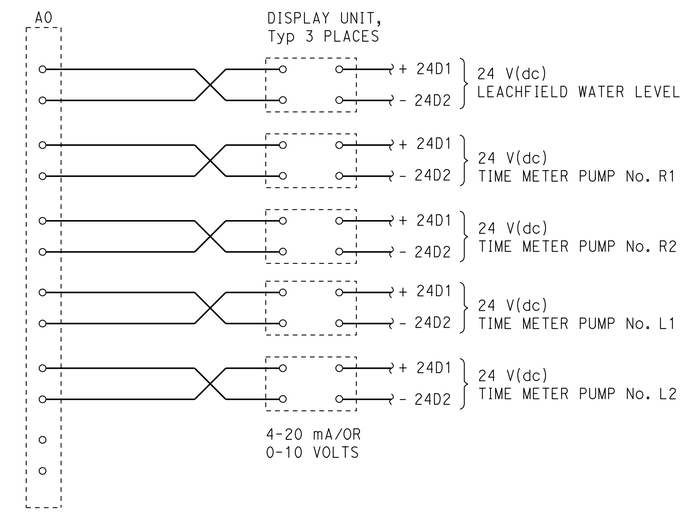

C PLC ANALOG OUTPUT MODULE

DESIGN	BY Joseph Abdelsayed	CHECKED J.S. Sandhu	
DETAILS	BY Ed D. Tapalla 1/11	CHECKED Joseph Abdelsayed	
QUANTITIES	BY Joseph Abdelsayed	CHECKED J.S. Sandhu	

STATE OF CALIFORNIA
DEPARTMENT OF TRANSPORTATION

DIVISION OF ENGINEERING SERVICES
ELECTRICAL-MECHANICAL-WATER AND WASTEWATER DESIGN

BRIDGE NO. 56R0003R/L
POST MILE R72.0

CACTUS CITY SAFETY ROADSIDE REST AREA
WASTEWATER TREATMENT SYSTEM
RECIRCULATION AND LEACHFIELD CONTROL
STATION CONTROL SCHEMATIC DIAGRAM 3

SHEET **EE2-6**

TAEMWW Imperial Rev. 7/10

ORIGINAL SCALE IN INCHES FOR REDUCED PLANS 0 1 2 3

UNIT 3596
PROJECT NUMBER & PHASE 08000004441
EA 0L9000

DISREGARD PRINTS BEARING EARLIER REVISION DATES → 1/4/11 10/31/11 12/3/12

REVISION DATES (PRELIMINARY STAGE ONLY) SHEET OF

13-NOV-2013 06:01
ee2_06.dgn