INDEX OF PLANS

SHEET No.	DESCRIPTION
1	TITLE AND LOCATION MAP
2	TYPICAL CROSS SECTIONS
3-6	LAYOUTS
7-9	CONSTRUCTION DETAILS
10	DRAINAGE PROFILES
11-14	UTILITY PLANS
15	CONSTRUCTION AREA SIGNS
16-18	TRAFFIC HANDLING PLANS
19	PAVEMENT DELINEATION AND SIGN PLANS
20	PAVEMENT DELINEATION QUANTITIES
21	SIGN QUANTITIES
22	SUMMARY OF QUANTITIES
23-32	REVISED STANDARDS PLANS

THE STANDARD PLANS LIST APPLICABLE TO THIS CONTRACT IS INCLUDED IN THE NOTICE TO BIDDERS AND SPECIAL PROVISIONS BOOK

STATE OF CALIFORNIA

DEPARTMENT OF TRANSPORTATION

PROJECT PLANS FOR CONSTRUCTION ON

STATE HIGHWAY

IN SAN BERNADINO COUNTY
IN AND NEAR YUCCA VALLEY
FROM YUCCA PARK ROAD TO SHAFTNER AVENUE

TO BE SUPPLEMENTED BY STANDARD PLANS DATED MAY 2006

Dist	COUNTY	ROUTE	POST MILES TOTAL PROJECT	SHEET No.	TOTAL SHEETS
08	SBd	62	7.6/8.5	1	32

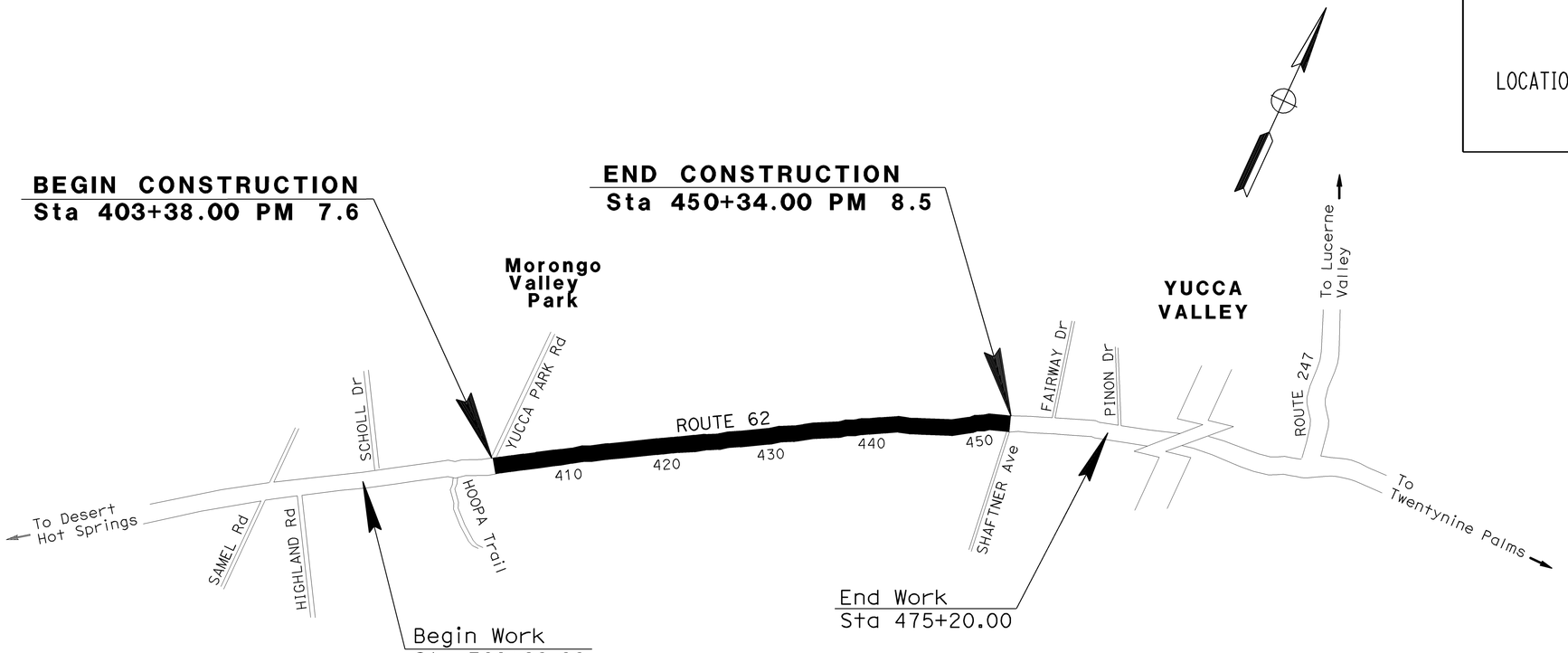

NO SCALE

THE CONTRACTOR SHALL POSSESS THE CLASS (OR CLASSES) OF LICENSE AS SPECIFIED IN THE "NOTICE TO BIDDERS."

PROJECT MANAGER: HONG VAN

DESIGN ENGINEER: PARWAZ KHASRAW

12-21-09
PROJECT ENGINEER — DATE
REGISTERED CIVIL ENGINEER

REGISTERED PROFESSIONAL ENGINEER — HAISSAM YAHYA — No. 56288 — Exp. 12-31-10 — CIVIL — STATE OF CALIFORNIA

February 16, 2010
PLANS APPROVAL DATE

THE STATE OF CALIFORNIA OR ITS OFFICERS OR AGENTS SHALL NOT BE RESPONSIBLE FOR THE ACCURACY OR COMPLETENESS OF SCANNED COPIES OF THIS PLAN SHEET.

LAST REVISION 12-21-09
DATE PLOTTED => 16-FEB-2010
TIME PLOTTED => 13:28

CONTRACT No. 08-0K8804

Dist	COUNTY	ROUTE	POST MILES TOTAL PROJECT	SHEET No.	TOTAL SHEETS
08	SBd	62	7.6/8.5	2	32

REGISTERED CIVIL ENGINEER — DATE 12-21-09

HAISSAM YAHYA No. 56288 Exp. 12-31-10 CIVIL — REGISTERED PROFESSIONAL ENGINEER — STATE OF CALIFORNIA

02-16-10
PLANS APPROVAL DATE

THE STATE OF CALIFORNIA OR ITS OFFICERS OR AGENTS SHALL NOT BE RESPONSIBLE FOR THE ACCURACY OR COMPLETENESS OF SCANNED COPIES OF THIS PLAN SHEET.

NOTES:

1. DIMENSIONS OF THE STRUCTURAL SECTIONS ARE SUBJECT TO THE TOLERANCES SPECIFIED IN THE STANDARD SPECIFICATIONS.
2. EXACT LIMITS OF WORK SHALL BE DETERMINED BY THE ENGINEER.
3. SUPERELEVATION AS SHOWN OR AS DIRECTED BY THE ENGINEER.

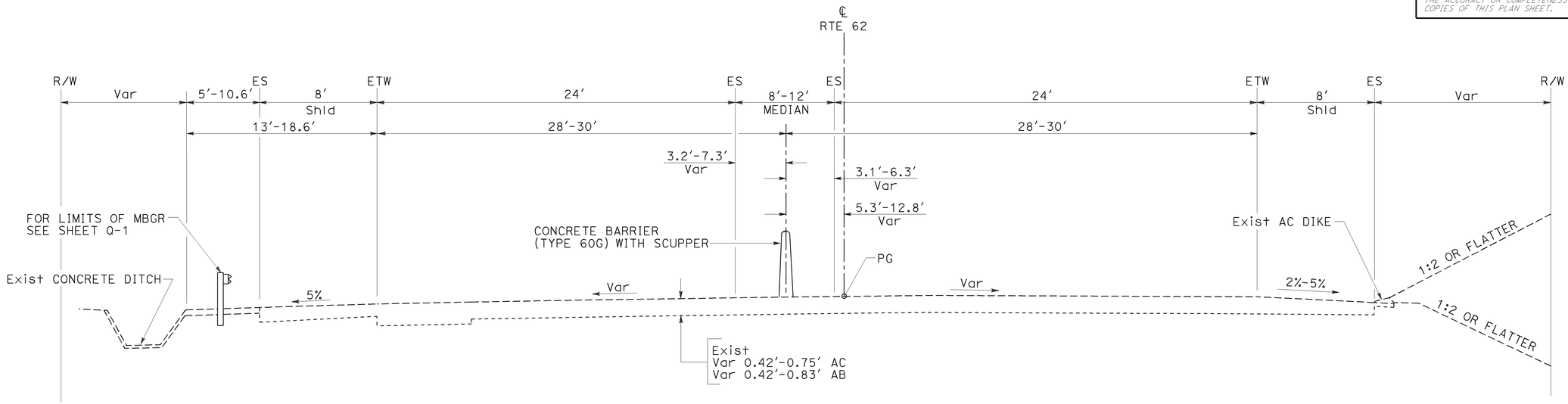

ROUTE 62

STA 426+09.60 To STA 435+60.00

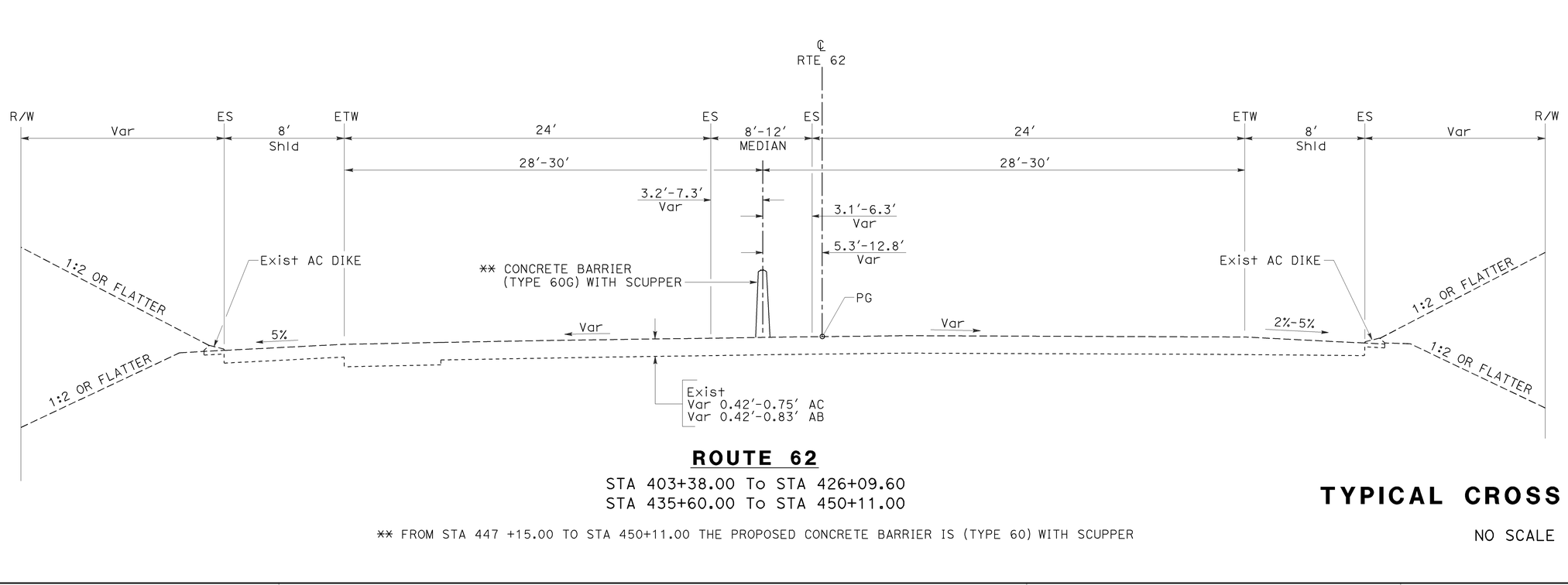

ROUTE 62

STA 403+38.00 To STA 426+09.60
STA 435+60.00 To STA 450+11.00

** FROM STA 447 +15.00 TO STA 450+11.00 THE PROPOSED CONCRETE BARRIER IS (TYPE 60) WITH SCUPPER

TYPICAL CROSS SECTIONS

NO SCALE

X-1

REVISED BY | DATE REVISED
PARWAZ KHASRAW | HAISSAM YAHYA
CALCULATED-DESIGNED BY | CHECKED BY
FUNCTIONAL SUPERVISOR: HAISSAM YAHYA
STATE OF CALIFORNIA - DEPARTMENT OF TRANSPORTATION
Caltrans® DESIGN DIVISION

LAST REVISION | DATE PLOTTED => 16-FEB-2010 | TIME PLOTTED => 13:16
12-21-09

BORDER LAST REVISED 4/11/2008 | RELATIVE BORDER SCALE IS IN INCHES 0 1 2 3 | USERNAME => dmcbride | DGN FILE => 80k880ca001.dgn | CU 08367 | EA 0K8801

Dist	COUNTY	ROUTE	POST MILES TOTAL PROJECT	SHEET No.	TOTAL SHEETS
08	SBd	62	7.6/8.5	3	32

12-21-09
REGISTERED CIVIL ENGINEER DATE

HAISSAM YAHYA
No. 56288
Exp. 12-31-10
CIVIL
REGISTERED PROFESSIONAL ENGINEER
STATE OF CALIFORNIA

02-16-10
PLANS APPROVAL DATE

THE STATE OF CALIFORNIA OR ITS OFFICERS OR AGENTS SHALL NOT BE RESPONSIBLE FOR THE ACCURACY OR COMPLETENESS OF SCANNED COPIES OF THIS PLAN SHEET.

NOTE: FOR COMPLETE RIGHT OF WAY DATA, SEE RIGHT OF WAY RECORD MAPS AT DISTRICT OFFICE.

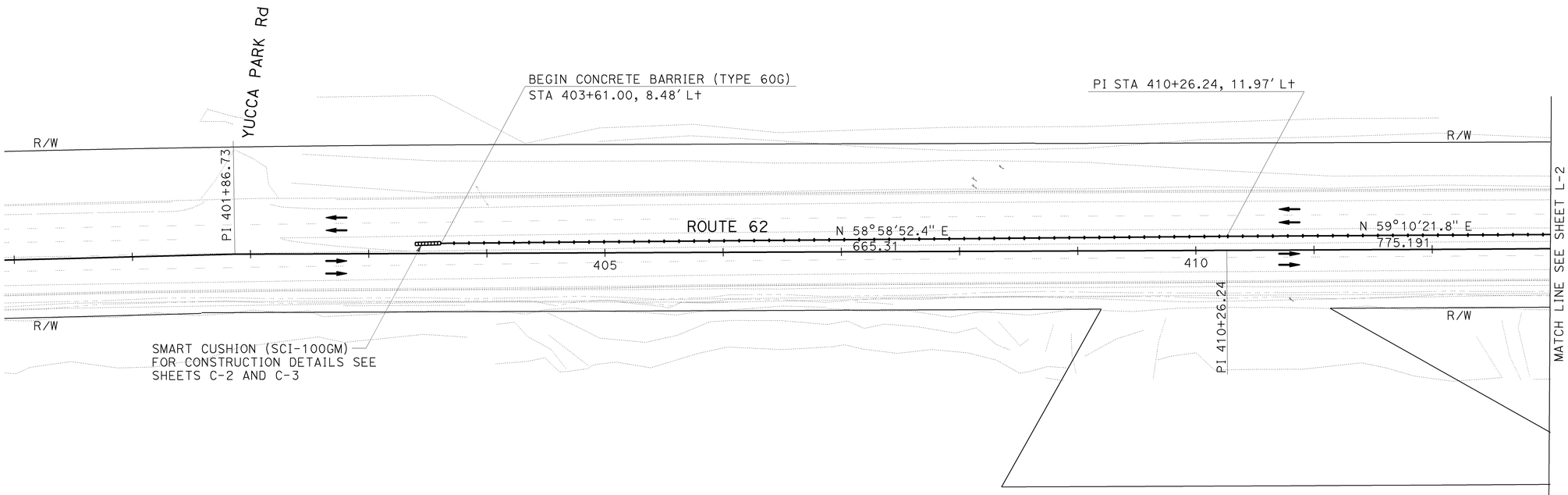

LAYOUT

SCALE: 1" = 50'

L-1

PARWAZ KHASRAW — CALCULATED-DESIGNED BY
HAISSAM YAHYA — CHECKED BY
REVISED BY — DATE REVISED
FUNCTIONAL SUPERVISOR: HAISSAM YAHYA

STATE OF CALIFORNIA - DEPARTMENT OF TRANSPORTATION
Caltrans® DESIGN DIVIDION

LAST REVISION 12-21-09
DATE PLOTTED => 16-FEB-2010
TIME PLOTTED => 13:16

BORDER LAST REVISED 4/11/2008
RELATIVE BORDER SCALE IS IN INCHES 0 1 2 3
USERNAME => dmcbride
DGN FILE => 80k880ea001.dgn
CU 08367
EA 0K8801

Dist	COUNTY	ROUTE	POST MILES TOTAL PROJECT	SHEET No.	TOTAL SHEETS
08	SBd	62	7.6/8.5	4	32

HAISSAM YAHYA 12-21-09
REGISTERED CIVIL ENGINEER DATE

02-16-10
PLANS APPROVAL DATE

REGISTERED PROFESSIONAL ENGINEER
HAISSAM YAHYA
No. 56288
Exp. 12-31-10
CIVIL
STATE OF CALIFORNIA

THE STATE OF CALIFORNIA OR ITS OFFICERS OR AGENTS SHALL NOT BE RESPONSIBLE FOR THE ACCURACY OR COMPLETENESS OF SCANNED COPIES OF THIS PLAN SHEET.

NOTE: FOR COMPLETE RIGHT OF WAY DATA, SEE RIGHT OF WAY RECORD MAPS AT DISTRICT OFFICE.

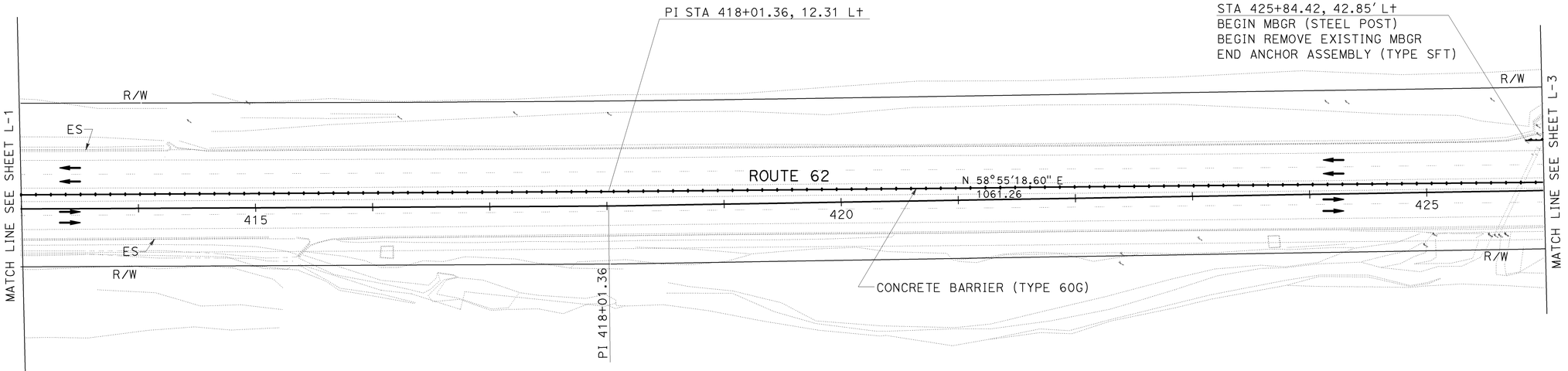

LAYOUT

SCALE: 1" = 50'

L-2

CALCULATED-DESIGNED BY	CHECKED BY	REVISED BY	DATE REVISED
PARWAZ KHASRAW	HAISSAM YAHYA		

FUNCTIONAL SUPERVISOR: HAISSAM YAHYA

STATE OF CALIFORNIA - DEPARTMENT OF TRANSPORTATION
Caltrans® DESIGN DIVIDION

LAST REVISION 12-21-09 | DATE PLOTTED => 16-FEB-2010 | TIME PLOTTED => 13:16

BORDER LAST REVISED 4/11/2008

RELATIVE BORDER SCALE IS IN INCHES 0 1 2 3

USERNAME => dmcbride
DGN FILE => 80k880ea002.dgn

CU 08367

EA 0K8801

Dist	COUNTY	ROUTE	POST MILES TOTAL PROJECT	SHEET No.	TOTAL SHEETS
08	SBd	62	7.6/8.5	5	32

12-21-09
REGISTERED CIVIL ENGINEER DATE

HAISSAM YAHYA
No. 56288
Exp. 12-31-10
CIVIL
REGISTERED PROFESSIONAL ENGINEER
STATE OF CALIFORNIA

02-16-10
PLANS APPROVAL DATE

THE STATE OF CALIFORNIA OR ITS OFFICERS OR AGENTS SHALL NOT BE RESPONSIBLE FOR THE ACCURACY OR COMPLETENESS OF SCANNED COPIES OF THIS PLAN SHEET.

NOTE: FOR COMPLETE RIGHT OF WAY DATA, SEE RIGHT OF WAY RECORD MAPS AT DISTRICT OFFICE.

LEGEND:

(X) DRAINAGE SYSTEM No.

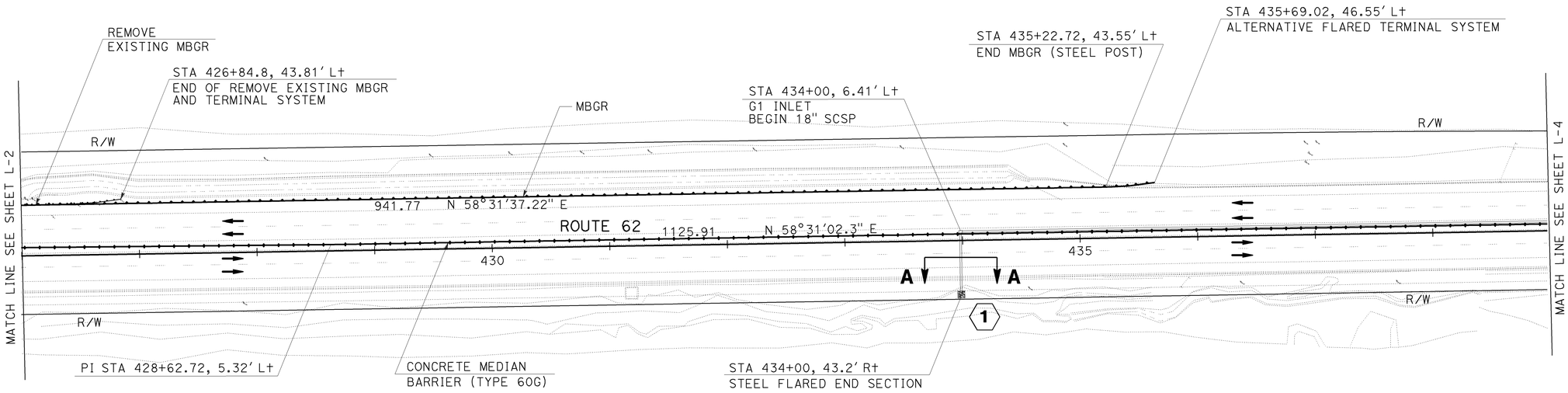

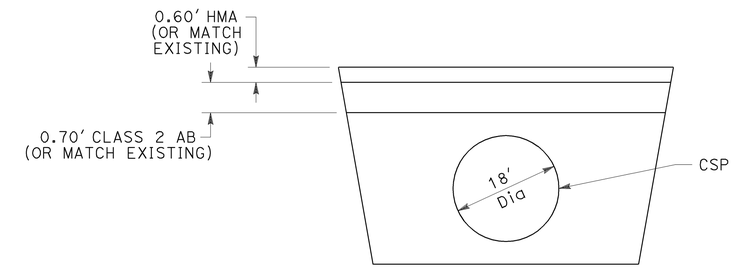

SECTION A-A
TYPICAL

LAYOUT

SCALE: 1" = 50′

L-3

PARWAZ KHASRAW — CALCULATED-DESIGNED BY
HAISSAM YAHYA — CHECKED BY
HAISSAM YAHYA — FUNCTIONAL SUPERVISOR
REVISED BY
DATE REVISED

STATE OF CALIFORNIA - DEPARTMENT OF TRANSPORTATION
Caltrans® DESIGN DIVISION

LAST REVISION DATE PLOTTED => 16-FEB-2010
12-21-09 TIME PLOTTED => 13:16

Dist	COUNTY	ROUTE	POST MILES TOTAL PROJECT	SHEET No.	TOTAL SHEETS
08	SBd	62	7.6/8.5	6	32

12-21-09
REGISTERED CIVIL ENGINEER DATE

HAISSAM YAHYA
No. 56288
Exp. 12-31-10
CIVIL
REGISTERED PROFESSIONAL ENGINEER
STATE OF CALIFORNIA

02-16-10
PLANS APPROVAL DATE

THE STATE OF CALIFORNIA OR ITS OFFICERS OR AGENTS SHALL NOT BE RESPONSIBLE FOR THE ACCURACY OR COMPLETENESS OF SCANNED COPIES OF THIS PLAN SHEET.

NOTE: FOR COMPLETE RIGHT OF WAY DATA, SEE RIGHT OF WAY RECORD MAPS AT DISTRICT OFFICE.

CURVE DATA

No.	R	△	T	L
①	3242.16	13°17′35"	377.80	752.21
②	3035.86	5°57′13"	157.87	315.46

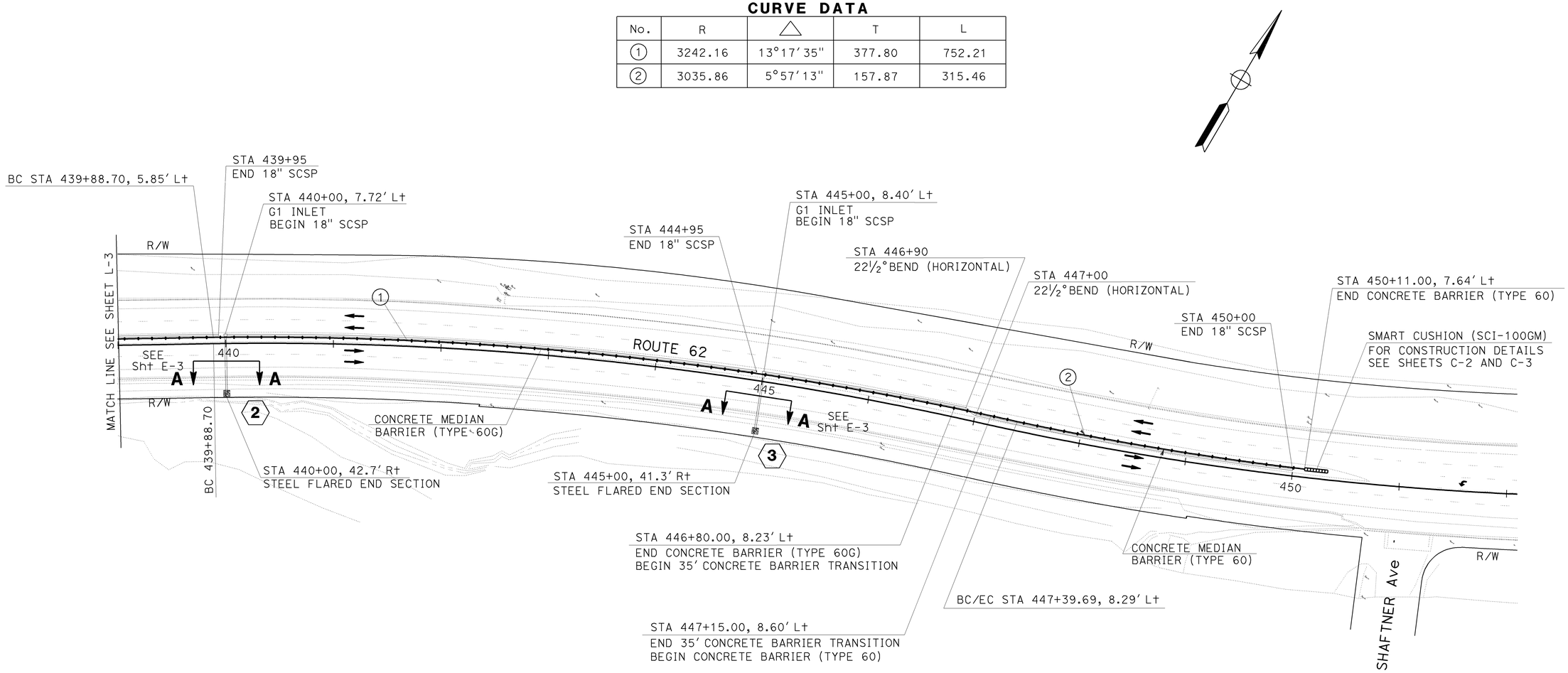

LAYOUT

SCALE: 1" = 50′

L-4

STATE OF CALIFORNIA - DEPARTMENT OF TRANSPORTATION
DESIGN DIVIDION
FUNCTIONAL SUPERVISOR: HAISSAM YAHYA
CALCULATED-DESIGNED BY: PARWAZ KHASRAW
CHECKED BY: HAISSAM YAHYA
REVISED BY
DATE REVISED

LAST REVISION DATE PLOTTED => 16-FEB-2010
12-21-09 TIME PLOTTED => 13:16

BORDER LAST REVISED 4/11/2008
RELATIVE BORDER SCALE IS IN INCHES 0 1 2 3
USERNAME => dmcbride
DGN FILE => 80k880ea004.dgn
CU 08367
EA 0K8801

Dist	COUNTY	ROUTE	POST MILES TOTAL PROJECT	SHEET No.	TOTAL SHEETS
08	SBd	62	7.6/8.5	7	32

REGISTERED CIVIL ENGINEER — DATE 12-21-09

HAISSAM YAHYA No. 56288 Exp. 12-31-10 CIVIL — REGISTERED PROFESSIONAL ENGINEER — STATE OF CALIFORNIA

02-16-10
PLANS APPROVAL DATE

THE STATE OF CALIFORNIA OR ITS OFFICERS OR AGENTS SHALL NOT BE RESPONSIBLE FOR THE ACCURACY OR COMPLETENESS OF SCANNED COPIES OF THIS PLAN SHEET.

NOTES:

1. THE CONTRACTOR CAN USE ANY METHOD APPROVED BY THE ENGINEER FOR FORMING THE SCUPPERS AS THE BARRIER IS BEING SLIP FORMED.
2. SEE STANDARD PLAN SHEETS A76A, A76B, A76O AND A76E FOR MORE INFORMATION.

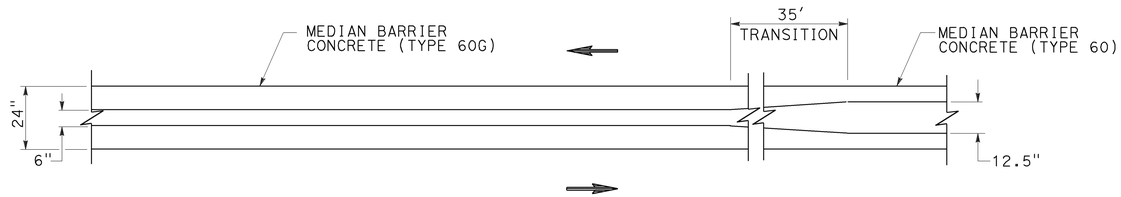

PLAN

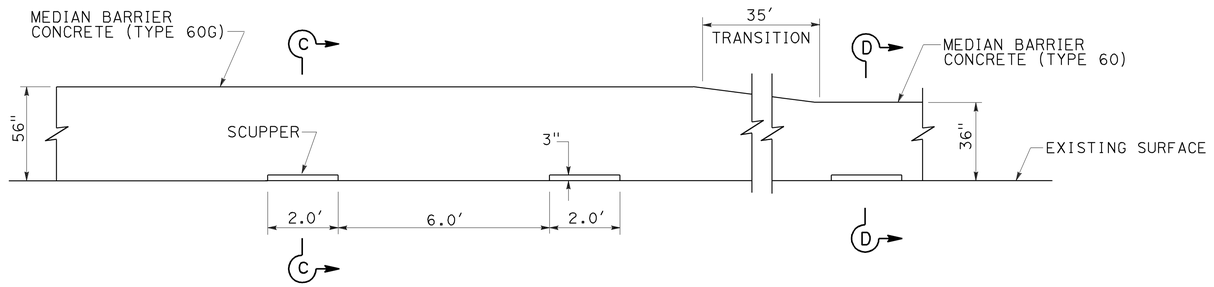

ELEVATION

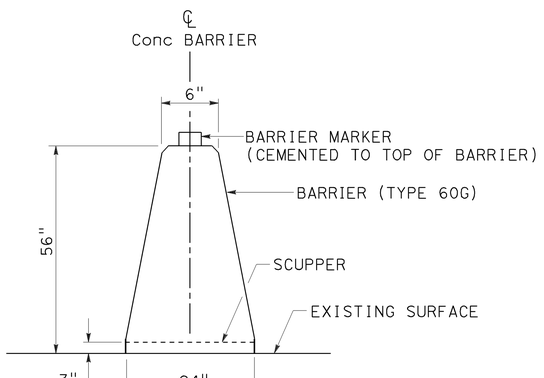

SECTION C-C

CONCRETE BARRIER TYPE 60G

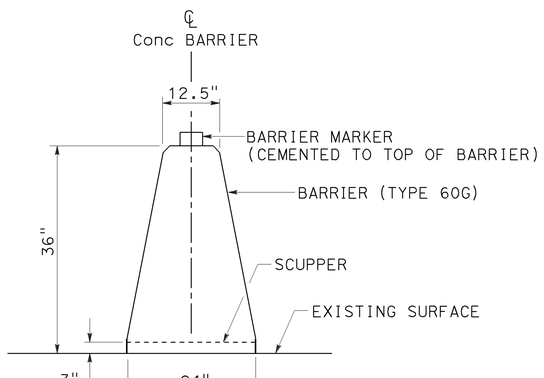

SECTION D-D

CONCRETE BARRIER TYPE 60

CONSTRUCTION DETAILS

NO SCALE

C-1

REVISED BY | DATE REVISED
PARWAZ KHASRAW | HAISSAM YAHYA
CALCULATED-DESIGNED BY | CHECKED BY
FUNCTIONAL SUPERVISOR: HAISSAM YAHYA

STATE OF CALIFORNIA - DEPARTMENT OF TRANSPORTATION
Caltrans® DESIGN DIVIDION

LAST REVISION: DATE PLOTTED => 16-FEB-2010 | TIME PLOTTED => 13:16
12-21-09

BORDER LAST REVISED 4/11/2008

RELATIVE BORDER SCALE IS IN INCHES 0 1 2 3

USERNAME => dmcbride
DGN FILE => 80k880ga001.dgn

CU 08367 | EA 0K8801

Dist	COUNTY	ROUTE	POST MILES TOTAL PROJECT	SHEET No.	TOTAL SHEETS
08	SBd	62	7.6/8.5	8	32

12-21-09
REGISTERED CIVIL ENGINEER DATE

02-16-10
PLANS APPROVAL DATE

REGISTERED PROFESSIONAL ENGINEER
HAISSAM YAHYA
No. 56288
Exp. 12-31-10
CIVIL
STATE OF CALIFORNIA

THE STATE OF CALIFORNIA OR ITS OFFICERS OR AGENTS SHALL NOT BE RESPONSIBLE FOR THE ACCURACY OR COMPLETENESS OF SCANNED COPIES OF THIS PLAN SHEET.

NOTE:

1. FOR ADDITIONAL DETAILS REFER TO MANUFACTURES DRAWINGS AND INSTRUCTIONS FOR SMART CUSHION (SCI-100GM)

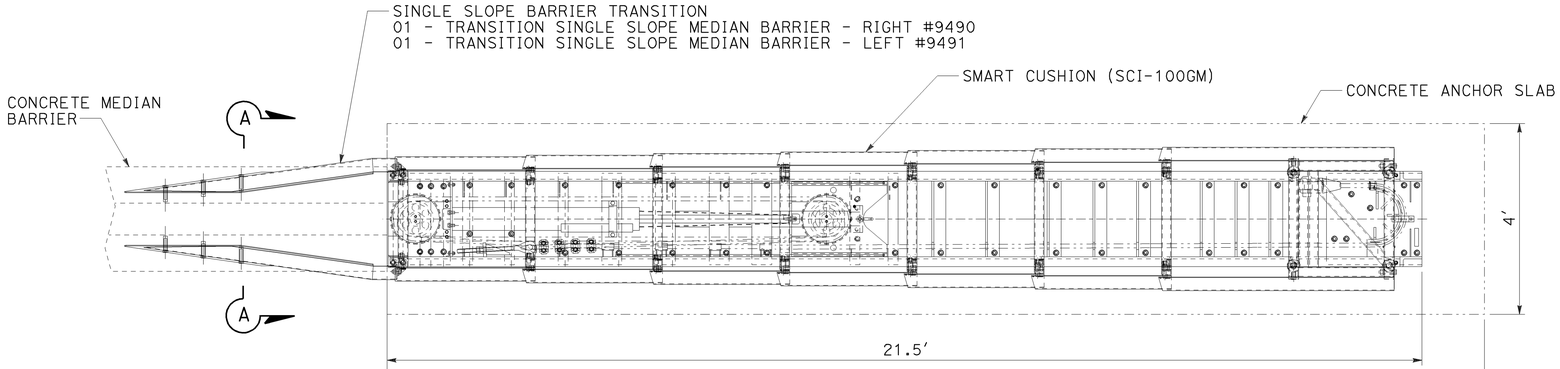

PLAN VIEW

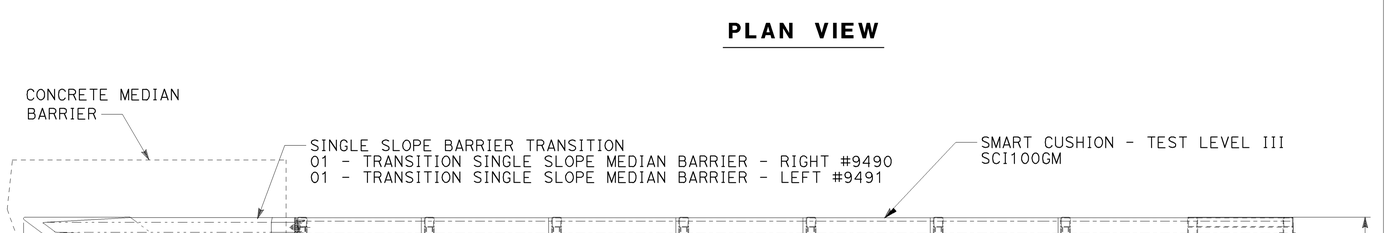

ELEVATION

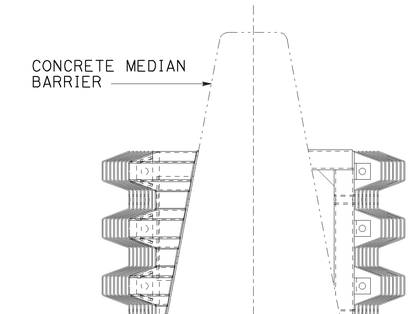

SECTION A-A

SMART CUSHION (SCI-100GM)

CONSTRUCTION DETAILS

NO SCALE

C-2

STATE OF CALIFORNIA - DEPARTMENT OF TRANSPORTATION
Caltrans® DESIGN DIVIDION
FUNCTIONAL SUPERVISOR: HAISSAM YAHYA
CALCULATED-DESIGNED BY: PARWAZ KHASRAW
CHECKED BY: HAISSAM YAHYA
REVISED BY
DATE REVISED

LAST REVISION DATE PLOTTED => 16-FEB-2010
12-21-09 TIME PLOTTED => 13:16

Dist	COUNTY	ROUTE	POST MILES TOTAL PROJECT	SHEET No.	TOTAL SHEETS
08	SBd	62	7.6/8.5	9	32

REGISTERED CIVIL ENGINEER — 12-21-09 DATE

02-16-10
PLANS APPROVAL DATE

HAISSAM YAHYA
No. 56288
Exp. 12-31-10
CIVIL
REGISTERED PROFESSIONAL ENGINEER
STATE OF CALIFORNIA

THE STATE OF CALIFORNIA OR ITS OFFICERS OR AGENTS SHALL NOT BE RESPONSIBLE FOR THE ACCURACY OR COMPLETENESS OF SCANNED COPIES OF THIS PLAN SHEET.

NOTES:

1. CROSS SLOPE AT TOP SURFACE NOT TO EXCEED 1 TO 10, FOUNDATION MUST BE ON A LEVEL PLANE.
2. THE CONTRACTOR SHALL FURNISH A CERTIFICATION FOR MATERIAL INSTALLED.
3. WIDE OBSTACLES AND TRANSITIONS MAY REQUIRE THE FOUNDATION TO BE LONGER.

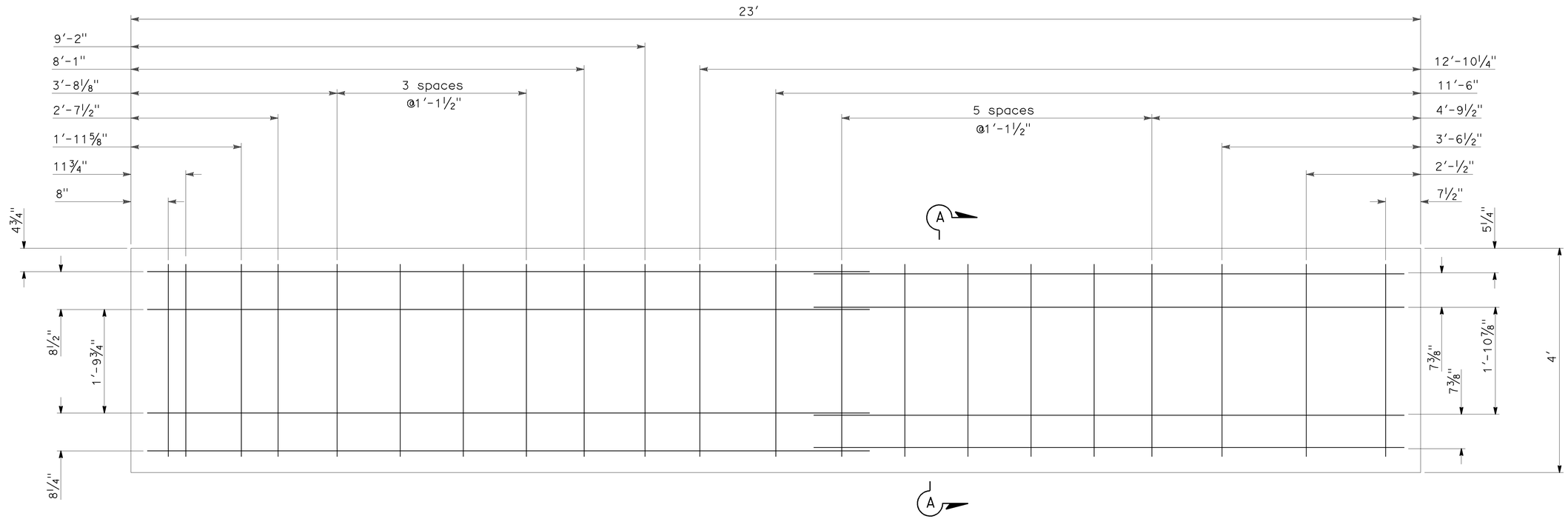

PLAN VIEW

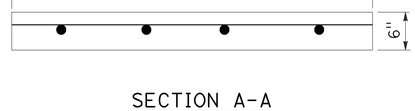

SECTION A-A

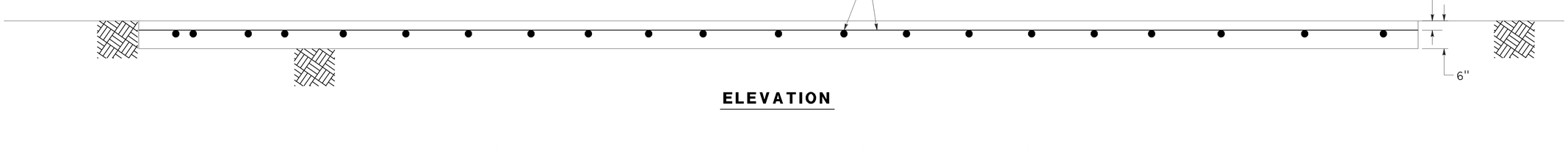

ELEVATION

CONCRETE FOUNDATION FOR SMART CUSHION

CONSTRUCTION DETAILS

NO SCALE

C-3

STATE OF CALIFORNIA - DEPARTMENT OF TRANSPORTATION
Caltrans® DESIGN DIVISION

FUNCTIONAL SUPERVISOR: HAISSAM YAHYA
CALCULATED-DESIGNED BY: PARWAZ KHASRAW
CHECKED BY: HAISSAM YAHYA
REVISED BY
DATE REVISED

LAST REVISION DATE PLOTTED => 16-FEB-2010
TIME PLOTTED => 13:17
12-21-09

BORDER LAST REVISED 4/11/2008

RELATIVE BORDER SCALE IS IN INCHES 0 1 2 3

USERNAME => dmcbride
DGN FILE => 80k880ga003.dgn

CU 08367

EA 0K8801

Dist	COUNTY	ROUTE	POST MILES TOTAL PROJECT	SHEET No.	TOTAL SHEETS
08	SBd	62	7.6/8.5	10	32

HAISSAM YAHYA 12-21-09
REGISTERED CIVIL ENGINEER DATE

02-16-10
PLANS APPROVAL DATE

REGISTERED PROFESSIONAL ENGINEER — HAISSAM YAHYA — No. 56288 — Exp. 12-31-10 — CIVIL — STATE OF CALIFORNIA

THE STATE OF CALIFORNIA OR ITS OFFICERS OR AGENTS SHALL NOT BE RESPONSIBLE FOR THE ACCURACY OR COMPLETENESS OF SCANNED COPIES OF THIS PLAN SHEET.

NOTE:

1. THE BACKFILL AFTER PLACING CORRUGATED STEEL PIPE SHALL BE SLURRY CEMENT BACKFILL.

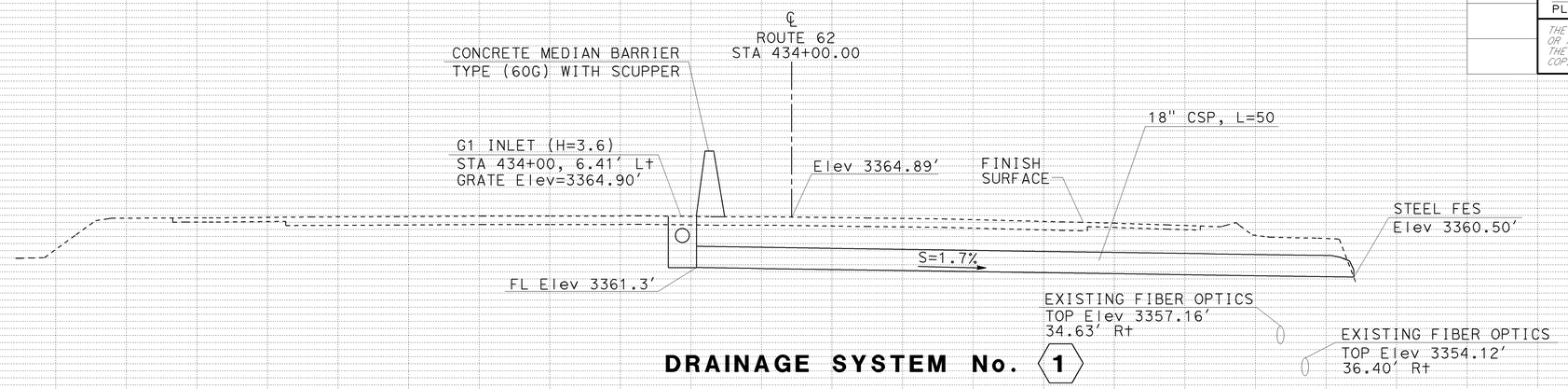

DRAINAGE SYSTEM No. 1

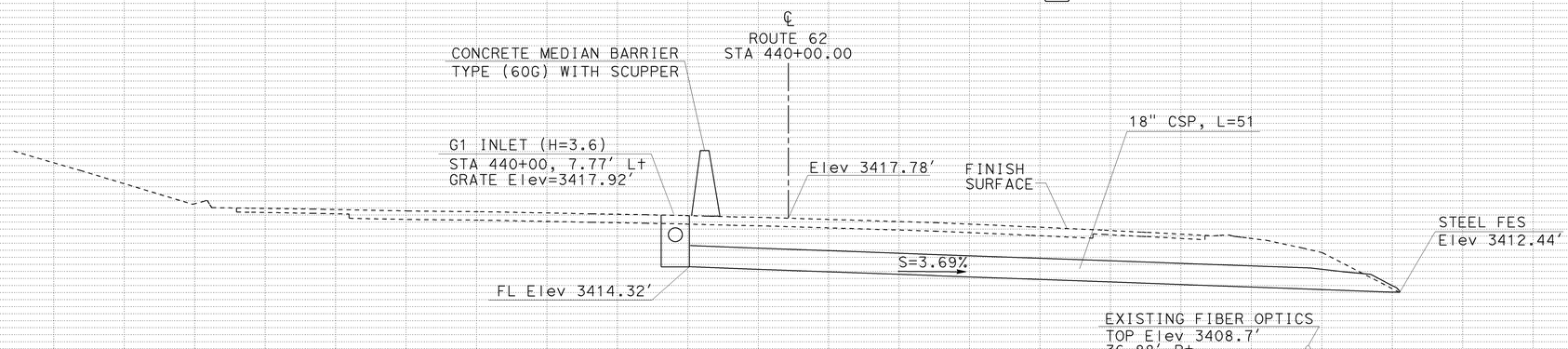

DRAINAGE SYSTEM No. 2

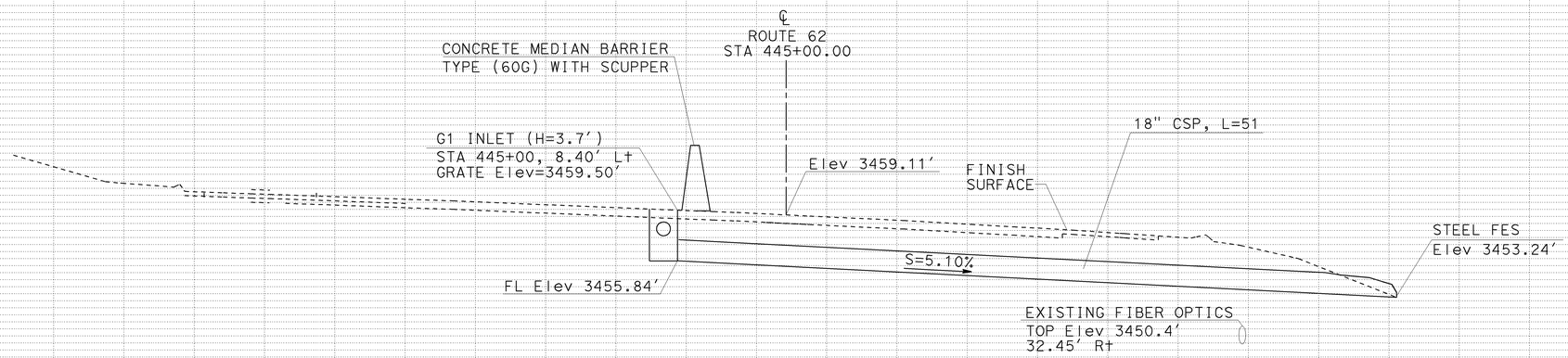

DRAINAGE SYSTEM No. 3

(1) (2) (3)

DRAINAGE PROFILES

SCALE: Horiz 1" = 5'
Vert 1" = 5'

DP-1

REVISED BY | DATE REVISED

PARWAZ KHASRAW | HAISSAM YAHYA

CALCULATED-DESIGNED BY | CHECKED BY

FUNCTIONAL SUPERVISOR: HAISSAM YAHYA

STATE OF CALIFORNIA - DEPARTMENT OF TRANSPORTATION
Caltrans® DESIGN DIVISION

LAST REVISION DATE PLOTTED => 16-FEB-2010
12-21-09 TIME PLOTTED => 13:17

Dist	COUNTY	ROUTE	POST MILES TOTAL PROJECT	SHEET No.	TOTAL SHEETS
08	SBd	62	7.6/8.5	11	32

12-21-09
REGISTERED CIVIL ENGINEER DATE

02-16-10
PLANS APPROVAL DATE

REGISTERED PROFESSIONAL ENGINEER
HAISSAM YAHYA
No. 56288
Exp. 12-31-10
CIVIL
STATE OF CALIFORNIA

THE STATE OF CALIFORNIA OR ITS OFFICERS OR AGENTS SHALL NOT BE RESPONSIBLE FOR THE ACCURACY OR COMPLETENESS OF SCANNED COPIES OF THIS PLAN SHEET.

NOTE: FOR COMPLETE RIGHT OF WAY DATA, SEE RIGHT OF WAY RECORD MAPS AT DISTRICT OFFICE.

LEGEND:

---OHE—OTV----	Exist OVERHEAD ELECTRICAL AND OVERHEAD TV
——G——G———	EXISTING HP STEEL GAS
---GS———GS——	EXISTING HP PETROLEUM
—T---FO—T---FO—	EXISTING TELEPHONE AND FIBER OPTIC
--OHT-----OHT---	EXISTING OVERHEAD TELEPHONE
--T——--T——--T——	EXISTING TELEPHONE

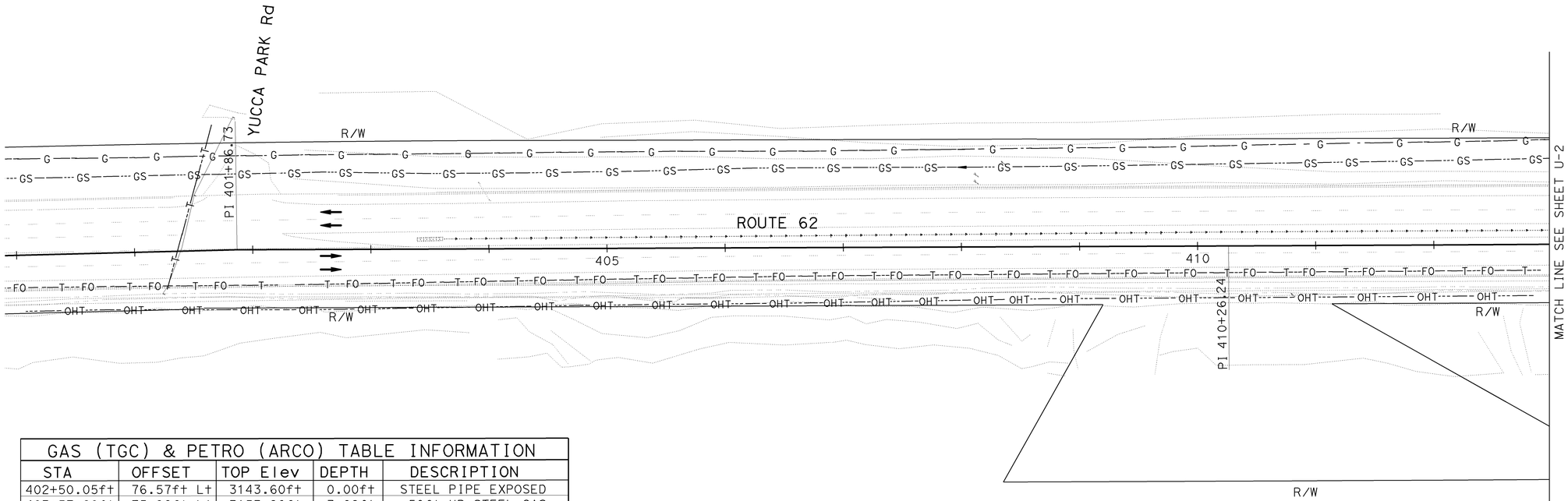

GAS (TGC) & PETRO (ARCO) TABLE INFORMATION				
STA	OFFSET	TOP Elev	DEPTH	DESCRIPTION
402+50.05ft	76.57ft Lt	3143.60ft	0.00ft	STEEL PIPE EXPOSED
403+57.60ft	75.98ft Lt	3153.90ft	3.08ft	.50ft HP STEEL GAS
404+61.80ft	76.38ft Lt	3161.51ft	2.30ft	.50ft HP STEEL GAS
405+64.55ft	76.48ft Lt	3167.41ft	2.99ft	.50ft HP STEEL GAS
406+67.24ft	75.85ft Lt	3174.11ft	3.08ft	.50ft HP STEEL GAS
407+69.87ft	76.38ft Lt	3180.60ft	3.22ft	.50ft HP STEEL GAS
408+60.55ft	76.90ft Lt	3187.00ft	1.51ft	.50ft HP STEEL GAS
409+63.27ft	77.07ft Lt	3193.99ft	3.41ft	.50ft HP STEEL GAS
410+66.65ft	78.54ft Lt	3203.01ft	2.89ft	.50ft HP STEEL GAS
411+47.82ft	79.43ft Lt	3206.78ft	3.41ft	.50ft HP STEEL GAS
412+45.26ft	80.15ft Lt	3212.40ft	4.10ft	.50ft HP STEEL GAS
402+60.62ft	61.88ft Lt	3147.60ft	5.41ft	1.33ft HP STEEL PETRO
403+49.33ft	59.45ft Lt	3153.31ft	4.00ft	1.33ft HP STEEL PETRO
404+32.27ft	59.28ft Lt	3158.39ft	3.81ft	1.33ft HP STEEL PETRO
405+34.11ft	60.14ft Lt	3165.41ft	4.00ft	1.33ft HP STEEL PETRO
406+25.12ft	61.97ft Lt	3171.29ft	3.08ft	1.33ft HP STEEL PETRO
407+19.24ft	61.78ft Lt	3177.39ft	3.22ft	1.33ft HP STEEL PETRO
408+15.99ft	61.35ft Lt	3183.79ft	3.08ft	1.33ft HP STEEL PETRO
409+12.84ft	61.71ft Lt	3190.71ft	3.22ft	1.33ft HP STEEL PETRO
410+11.47ft	63.98ft Lt	3197.80ft	2.20ft	1.33ft HP STEEL PETRO
411+11.27ft	63.25ft Lt	3204.49ft	2.99ft	1.33ft HP STEEL PETRO
412+04.08ft	64.01ft Lt	3210.10ft	3.31ft	1.33ft HP STEEL PETRO

THIS PLAN ACCURATE FOR UTILITY INFORMATION ONLY

UTILITY PLAN

SCALE: 1" = 50'

U-1

CALCULATED-DESIGNED BY: PARWAZ KHASRAW
CHECKED BY: HAISSAM YAHYA
FUNCTIONAL SUPERVISOR: HAISSAM YAHYA
REVISED BY
DATE REVISED

STATE OF CALIFORNIA - DEPARTMENT OF TRANSPORTATION
Caltrans® DESIGN DIVIDION

LAST REVISION 12-21-09 DATE PLOTTED => 16-FEB-2010 TIME PLOTTED => 13:17

BORDER LAST REVISED 4/11/2008
RELATIVE BORDER SCALE IS IN INCHES 0 1 2 3
USERNAME => dmcbride
DGN FILE => 80k880ka001.dgn
CU 08367
EA 0K8801

Dist	COUNTY	ROUTE	POST MILES TOTAL PROJECT	SHEET No.	TOTAL SHEETS
08	SBd	62	7.6/8.5	12	30

HAISSAM YAHYA 12-21-09
REGISTERED CIVIL ENGINEER DATE

02-16-10
PLANS APPROVAL DATE

REGISTERED PROFESSIONAL ENGINEER
HAISSAM YAHYA
No. 56288
Exp. 12-31-10
CIVIL
STATE OF CALIFORNIA

THE STATE OF CALIFORNIA OR ITS OFFICERS OR AGENTS SHALL NOT BE RESPONSIBLE FOR THE ACCURACY OR COMPLETENESS OF SCANNED COPIES OF THIS PLAN SHEET.

NOTE: FOR COMPLETE RIGHT OF WAY DATA, SEE RIGHT OF WAY RECORD MAPS AT DISTRICT OFFICE.

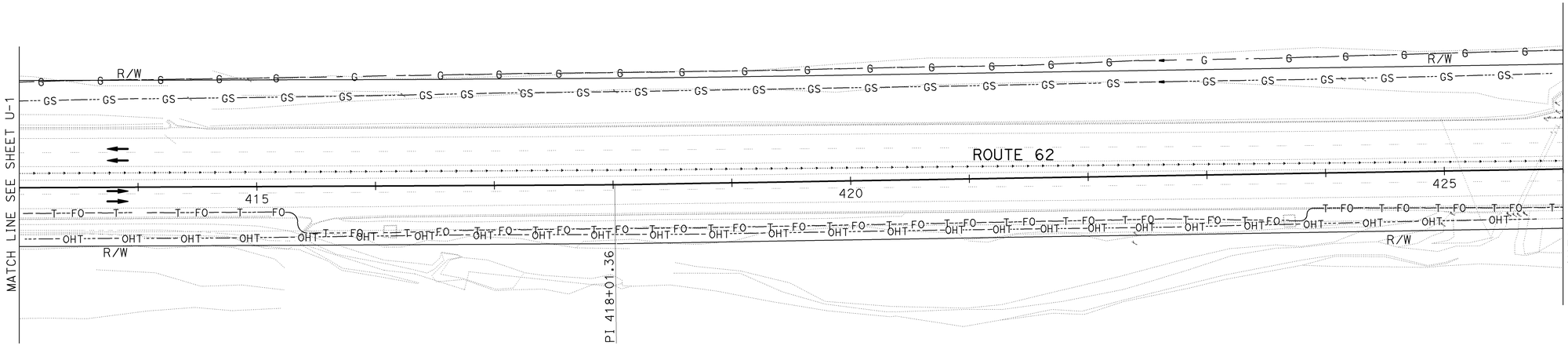

GAS (TGC) & PETRO (ARCO) TABLE INFORMATION				
STA	OFFSET	TOP Elev	DEPTH	DESCRIPTION
413+42.50ft	82.09ft Lt	3221.09ft	4.00ft	.50ft HP STEEL GAS
414+45.23ft	83.10ft Lt	3229.55ft	4.30ft	.50ft HP STEEL GAS
415+41.03ft	84.22ft Lt	3239.89ft	3.22ft	.50ft HP STEEL GAS
416+30.89ft	85.43ft Lt	3248.19ft	4.00ft	.50ft HP STEEL GAS
417+29.77ft	86.65ft Lt	3257.11ft	3.90ft	.50ft HP STEEL GAS
418+33.48ft	86.84ft Lt	3265.51ft	3.90ft	.50ft HP STEEL GAS
419+39.45ft	86.94ft Lt	3272.40ft	3.51ft	.50ft HP STEEL GAS
420+45.06ft	87.66ft Lt	3283.29ft	3.31ft	.50ft HP STEEL GAS
421+46.31ft	87.63ft Lt	3290.41ft	3.90ft	.50ft HP STEEL GAS
422+44.31ft	90.06ft Lt	3295.01ft	3.71ft	.05ft HP STEEL GAS
423+47.26ft	90.03ft Lt	3298.29ft	3.51ft	.50ft HP STEEL GAS
424+42.80ft	91.31ft Lt	3301.60ft	3.41ft	.50ft HP STEEL GAS
425+45.29ft	92.59ft Lt	3304.00ft	3.51ft	.50ft HP STEEL GAS
413+05.27ft	65.45ft Lt	3217.81ft	2.89ft	1.33ft HP STEEL PETRO
414+04.81ft	66.70ft Lt	3225.81ft	2.99ft	1.33ft HP STEEL PETRO
415+04.97ft	67.55ft Lt	3236.21ft	2.00ft	1.33ft HP STEEL PETRO
416+03.26ft	68.70ft Lt	3246.09ft	1.90ft	1.33ft HP STEEL PETRO
417+07.23ft	70.47ft Lt	3255.01ft	2.10ft	1.33ft HP STEEL PETRO
418+02.80ft	70.83ft Lt	3263.41ft	2.49ft	1.33ft HP STEEL PETRO
419+04.18ft	71.19ft Lt	3269.81ft	3.51ft	1.33ft HP STEEL PETRO
419+97.26ft	71.29ft Lt	3278.41ft	1.90ft	1.33ft HP STEEL PETRO
420+96.93ft	71.26ft Lt	3287.30ft	3.08ft	1.33ft HP STEEL PETRO
421+95.88ft	71.69ft Lt	3293.30ft	2.89ft	1.33ft HP STEEL PETRO
422+82.76ft	72.08ft Lt	3296.52ft	2.79ft	1.33ft HP STEEL PETRO
423+80.89ft	71.98ft Lt	3299.50ft	2.99ft	1.33ft HP STEEL PETRO
424+82.33ft	72.60ft Lt	3302.49ft	2.89ft	1.33ft HP STEEL PETRO
425+79.41ft	73.49ft Lt	3303.11ft	4.00ft	1.33ft HP STEEL PETRO

UTILITY PLAN

SCALE: 1" = 50'

U-2

THIS PLAN ACCURATE FOR UTILITY INFORMATION ONLY

STATE OF CALIFORNIA - DEPARTMENT OF TRANSPORTATION
DESIGN DIVIDION

FUNCTIONAL SUPERVISOR: HAISSAM YAHYA

CALCULATED-DESIGNED BY: PARWAZ KHASRAW
CHECKED BY: HAISSAM YAHYA

REVISED BY | DATE REVISED

LAST REVISION | DATE PLOTTED => 16-FEB-2010 | TIME PLOTTED => 13:17 | 12-21-09

BORDER LAST REVISED 4/11/2008

RELATIVE BORDER SCALE IS IN INCHES 0 1 2 3

USERNAME => dmcbride
DGN FILE => 80k880ka002.dgn

CU 08367

EA 0K8801

Dist	COUNTY	ROUTE	POST MILES TOTAL PROJECT	SHEET No.	TOTAL SHEETS
08	SBd	62	7.6/8.5	13	32

REGISTERED CIVIL ENGINEER — DATE 12-21-09

02-16-10
PLANS APPROVAL DATE

REGISTERED PROFESSIONAL ENGINEER
HAISSAM YAHYA
No. 56288
Exp. 12-31-10
CIVIL
STATE OF CALIFORNIA

THE STATE OF CALIFORNIA OR ITS OFFICERS OR AGENTS SHALL NOT BE RESPONSIBLE FOR THE ACCURACY OR COMPLETENESS OF SCANNED COPIES OF THIS PLAN SHEET.

NOTE: FOR COMPLETE RIGHT OF WAY DATA, SEE RIGHT OF WAY RECORD MAPS AT DISTRICT OFFICE.

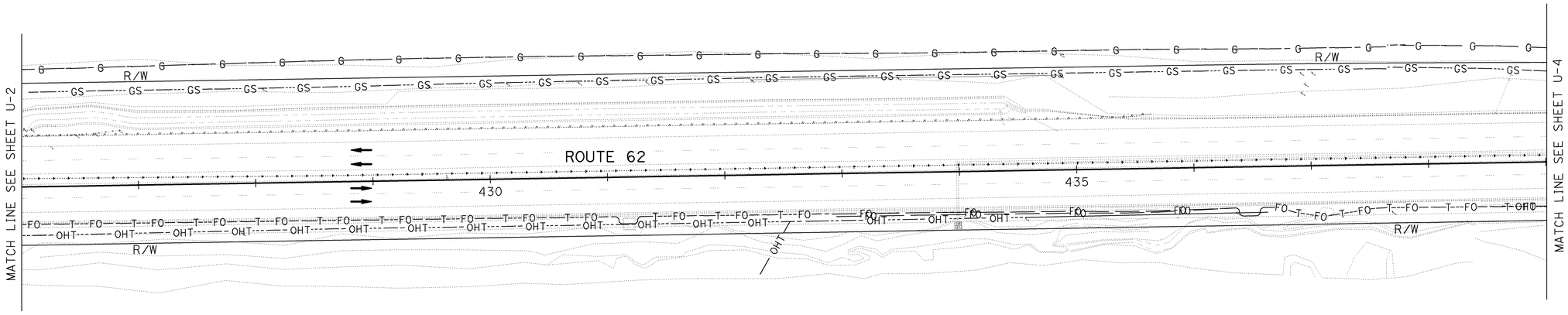

GAS (TGC) & PETRO (ARCO) TABLE INFORMATION				
STA	OFFSET	TOP Elev	DEPTH	DESCRIPTION
426+44.17ft	93.27ft Lt	3306.78ft	4.20ft	.50ft HP STEEL GAS
427+48.57ft	94.62ft Lt	3315.18ft	3.71ft	.50ft HP STEEL GAS
428+50.57ft	95.87ft Lt	3320.50ft	3.81ft	.50ft HP STEEL GAS
429+49.00ft	96.52ft Lt	3328.41ft	2.79ft	.50ft HP STEEL GAS
430+54.54ft	96.39ft Lt	3333.00ft	3.61ft	.50ft HP STEEL GAS
431+55.46ft	95.60ft Lt	3340.34ft	3.31ft	.50ft HP STEEL GAS
432+55.52ft	95.08ft Lt	3348.39ft	3.51ft	.50ft HP STEEL GAS
433+56.11ft	93.73ft Lt	3358.00ft	3.31ft	.50ft HP STEEL GAS
434+56.97ft	93.54ft Lt	3368.99ft	3.71ft	.50ft HP STEEL GAS
435+62.51ft	93.41ft Lt	3381.69ft	3.90ft	.50ft HP STEEL GAS
436+61.53ft	92.26ft Lt	3392.51ft	3.31ft	.50ft HP STEEL GAS
438+61.26ft	91.93ft Lt	3413.41ft	3.90ft	.50ft HP STEEL GAS
426+77.44ft	73.82ft Lt	3311.12ft	2.49ft	1.33ft HP STEEL PETRO
428+75.70ft	73.56ft Lt	3317.81ft	3.31ft	1.33ft HP STEEL PETRO
428+68.32ft	73.65ft Lt	3320.50ft	4.30ft	1.33ft HP STEEL PETRO
429+75.77ft	74.54ft Lt	3325.81ft	4.99ft	1.33ft HP STEEL PETRO
430+76.98ft	74.84ft Lt	3334.61ft	3.08ft	1.33ft HP STEEL PETRO
431+70.45ft	74.87ft Lt	3341.20ft	3.41ft	1.33ft HP STEEL PETRO
432+69.89ft	75.13ft Lt	3349.80ft	3.41ft	1.33ft HP STEEL PETRO
433+67.99ft	74.90ft Lt	3359.21ft	3.31ft	1.33ft HP STEEL PETRO
434+63.43ft	74.47ft Lt	3369.91ft	2.99ft	1.33ft HP STEEL PETRO
435+62.77ft	74.34ft Lt	3381.29ft	2.89ft	1.33ft HP STEEL PETRO
436+59.16ft	74.25ft Lt	3392.18ft	2.59ft	1.33ft HP STEEL PETRO
437+57.43ft	74.28ft Lt	3402.19ft	2.59ft	1.33ft HP STEEL PETRO
438+51.52ft	72.77ft Lt	3411.21ft	3.41ft	1.33ft HP STEEL PETRO

UTILITY PLAN

SCALE: 1" = 50'

U-3

THIS PLAN ACCURATE FOR UTILITY INFORMATION ONLY

STATE OF CALIFORNIA - DEPARTMENT OF TRANSPORTATION
DESIGN DIVIDION
FUNCTIONAL SUPERVISOR: HAISSAM YAHYA
CALCULATED-DESIGNED BY: PARWAZ KHASRAW
CHECKED BY: HAISSAM YAHYA
REVISED BY
DATE REVISED

LAST REVISION | DATE PLOTTED => 16-FEB-2010 | 12-21-09 | TIME PLOTTED => 13:17

BORDER LAST REVISED 4/11/2008

RELATIVE BORDER SCALE IS IN INCHES 0 1 2 3

USERNAME => dmcbride
DGN FILE => 80k880ka003.dgn

CU 08367

EA 0K8801

Dist	COUNTY	ROUTE	POST MILES TOTAL PROJECT	SHEET No.	TOTAL SHEETS
08	SBd	62	7.6/8.5	14	32

REGISTERED CIVIL ENGINEER 12-21-09 DATE

02-16-10
PLANS APPROVAL DATE

REGISTERED PROFESSIONAL ENGINEER HAISSAM YAHYA No. 56288 Exp. 12-31-10 CIVIL STATE OF CALIFORNIA

THE STATE OF CALIFORNIA OR ITS OFFICERS OR AGENTS SHALL NOT BE RESPONSIBLE FOR THE ACCURACY OR COMPLETENESS OF SCANNED COPIES OF THIS PLAN SHEET.

NOTE: FOR COMPLETE RIGHT OF WAY DATA, SEE RIGHT OF WAY RECORD MAPS AT DISTRICT OFFICE.

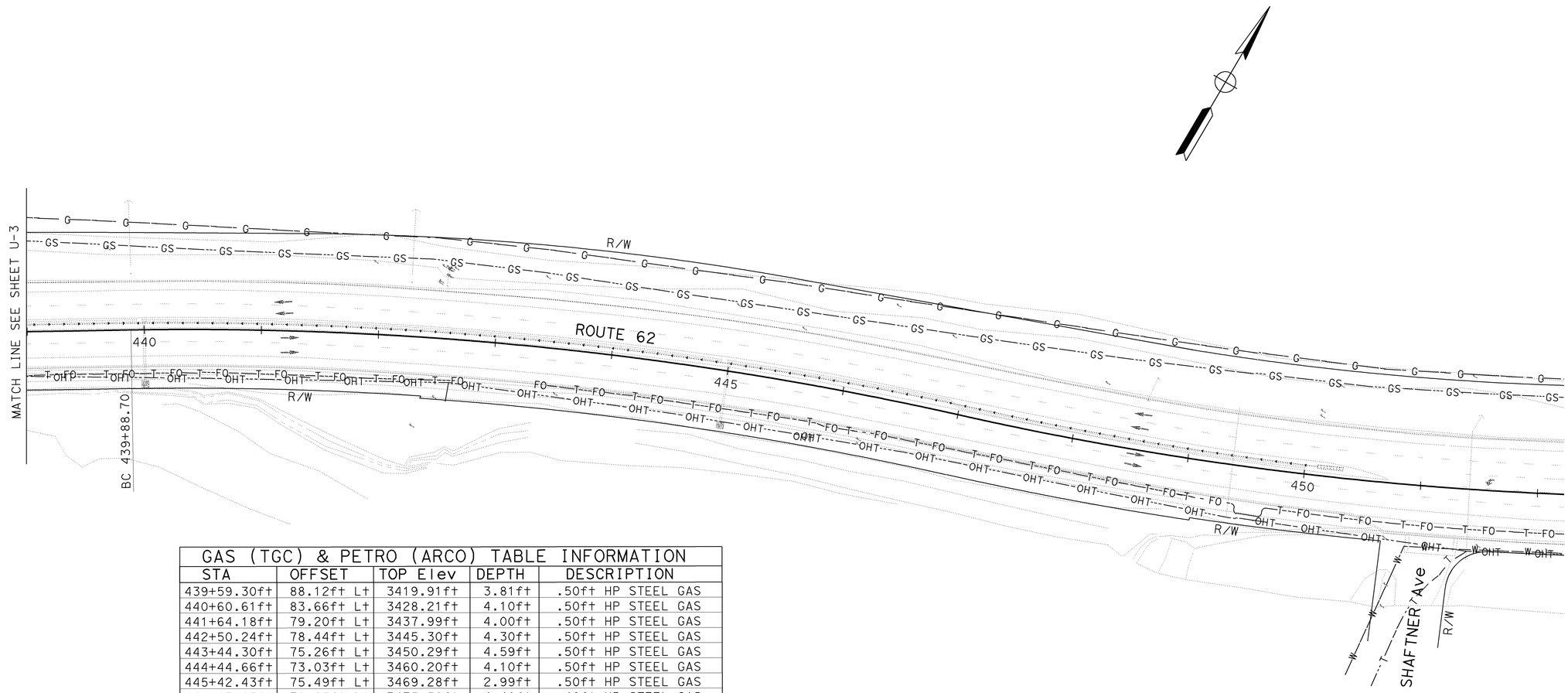

GAS (TGC) & PETRO (ARCO) TABLE INFORMATION				
STA	OFFSET	TOP Elev	DEPTH	DESCRIPTION
439+59.30ft	88.12ft Lt	3419.91ft	3.81ft	.50ft HP STEEL GAS
440+60.61ft	83.66ft Lt	3428.21ft	4.10ft	.50ft HP STEEL GAS
441+64.18ft	79.20ft Lt	3437.99ft	4.00ft	.50ft HP STEEL GAS
442+50.24ft	78.44ft Lt	3445.30ft	4.30ft	.50ft HP STEEL GAS
443+44.30ft	75.26ft Lt	3450.29ft	4.59ft	.50ft HP STEEL GAS
444+44.66ft	73.03ft Lt	3460.20ft	4.10ft	.50ft HP STEEL GAS
445+42.43ft	75.49ft Lt	3469.28ft	2.99ft	.50ft HP STEEL GAS
446+45.15ft	78.15ft Lt	3475.58ft	4.40ft	.40ft HP STEEL GAS
447+46.10ft	81.20ft Lt	3487.99ft	2.69ft	.50ft HP STEEL GAS
448+47.09ft	84.25ft Lt	3495.30ft	4.30ft	.50ft HP STEEL GAS
449+54.60ft	87.20ft Lt	3499.01ft	5.18ft	.50ft HP STEEL GAS
450+60.38ft	87.30ft Lt	3504.29ft	4.59ft	.50ft HP STEEL GAS
439+48.93ft	68.57ft Lt	3417.91ft	3.90ft	1.33ft HP STEEL PETRO
440+47.78ft	61.02ft Lt	3426.01ft	3.81ft	1.33ft HP STEEL PETRO
441+48.04ft	61.02ft Lt	3434.70ft	4.40ft	1.33ft HP STEEL PETRO
442+43.19ft	60.24ft Lt	3443.69ft	2.89ft	1.33ft HP STEEL PETRO
443+39.15ft	55.74ft Lt	3448.48ft	3.08ft	1.33ft HP STEEL PETRO
444+44.66ft	51.80ft Lt	3457.31ft	3.22ft	1.33ft HP STEEL PETRO
448+35.51ft	52.89ft Lt	3465.71ft	3.31ft	1.33ft HP STEEL PETRO
446+31.64ft	56.10ft Lt	3472.40ft	3.81ft	1.33ft HP STEEL PETRO
447+37.74ft	59.48ft Lt	3483.69ft	2.89ft	1.33ft HP STEEL PETRO
448+37.48ft	63.45ft Lt	3493.79ft	2.69ft	1.33ft HP STEEL PETRO
449+41.94ft	69.26ft Lt	3499.70ft	2.69ft	1.33ft HP STEEL PETRO
450+47.97ft	71.16ft Lt	3504.59ft	2.89ft	1.33ft HP STEEL PETRO

UTILITY PLAN

SCALE: 1" = 50'

U-4

THIS PLAN ACCURATE FOR UTILITY INFORMATION ONLY

STATE OF CALIFORNIA - DEPARTMENT OF TRANSPORTATION
Caltrans DESIGN DIVIDION

FUNCTIONAL SUPERVISOR: HAISSAM YAHYA
CALCULATED-DESIGNED BY: PARWAZ KHASRAW
CHECKED BY: HAISSAM YAHYA
REVISED BY
DATE REVISED

LAST REVISION 12-21-09
DATE PLOTTED => 16-FEB-2010
TIME PLOTTED => 13:21

Dist	COUNTY	ROUTE	POST MILES TOTAL PROJECT	SHEET No.	TOTAL SHEETS
08	SBd	62	7.6/8.5	15	32

Sidhartha Chowdhury 12-21-09
REGISTERED CIVIL ENGINEER DATE

02-16-10
PLANS APPROVAL DATE

REGISTERED PROFESSIONAL ENGINEER — SIDHARTHA CHOWDHURY — No. 55418 — Exp. 12-31-10 — CIVIL — STATE OF CALIFORNIA

THE STATE OF CALIFORNIA OR ITS OFFICERS OR AGENTS SHALL NOT BE RESPONSIBLE FOR THE ACCURACY OR COMPLETENESS OF SCANNED COPIES OF THIS PLAN SHEET.

REVISED BY | DATE REVISED

CALCULATED-DESIGNED BY: SIDHARTHA CHOWDHURY
CHECKED BY: LARRY SARTORI

FUNCTIONAL SUPERVISOR: LARRY SARTORI

STATE OF CALIFORNIA - DEPARTMENT OF TRANSPORTATION
Caltrans® TRAFFIC DESIGN B

LEGEND:

- 1 POST SIGN
- PORTABLE CHANGEABLE MESSAGE SIGN (PCMS)
- 2 POST SIGN

NOTES:

1. LOCATIONS OF CONSTRUCTION AREA SIGNS SHOWN ON THE DRAWING ARE APPROXIMATE. EXACT LOCATIONS WILL BE DETERMINED BY THE ENGINEER.
2. MESSAGES IN THE PCMS SIGNS SHALL BE DETERMINED BY THE ENGINEER.

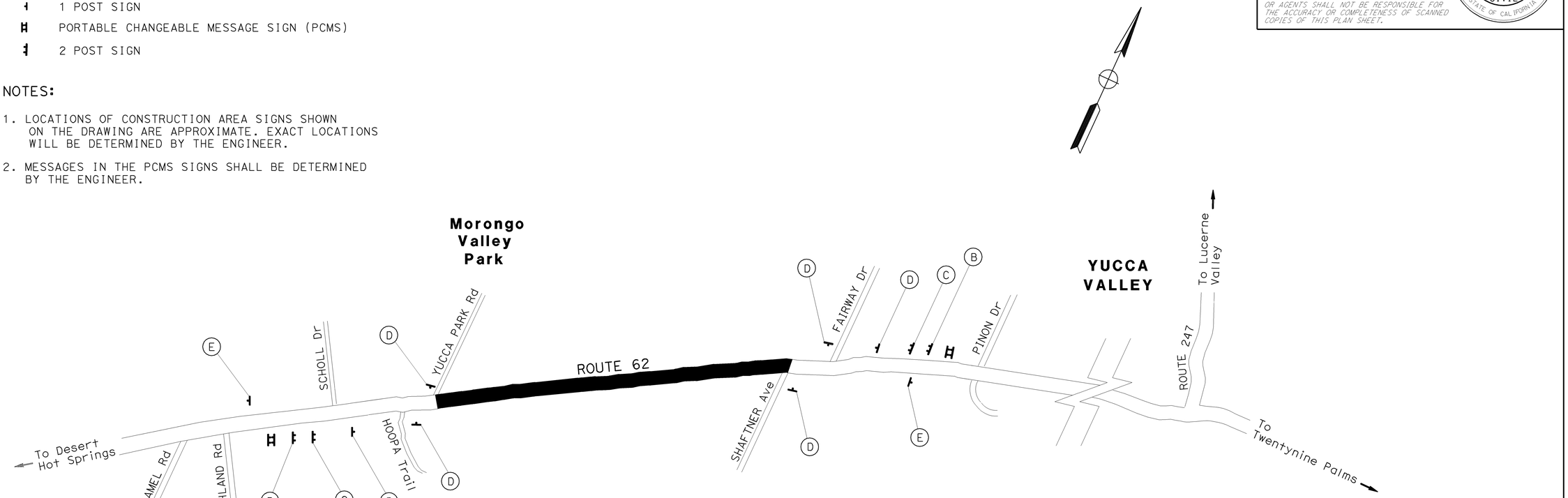

STATIONARY MOUNTED CONSTRUCTION AREA SIGNS

SIGN No.	SIGN CODE	PANEL SIZE (In X In)	SIGN MESSAGE	No. OF POST(S) AND SIZE (In X In)	No. OF SIGNS (EA)
(B)	G20-1	90 X 48	ROAD WORK NEXT 2 MILES	2 - 6 X 6	2
(C)	C40A(CA)	48 X 48	TRAFFIC FINES DOUBLED IN WORK ZONES	2 - 4 X 4	2
(D)	W20-1	48 X 48	ROAD WORK AHEAD	1 - 4 X 6	6
(E)	G20-2	48 X 24	END ROAD WORK	1 - 4 X 4	2

PORTABLE CHANGEABLE MESSAGE SIGN (PCMS)
EA
2

TRAFFIC PLASTIC DRUM
EA
240

CONSTRUCTION AREA SIGNS

NO SCALE

THIS PLAN IS ACCURATE FOR CONSTRUCTION AREA SIGN WORK ONLY

CS-1

LAST REVISION DATE PLOTTED => 16-FEB-2010
TIME PLOTTED => 13:21
12-21-09

BORDER LAST REVISED 4/11/2008 | RELATIVE BORDER SCALE IS IN INCHES 0 1 2 3 | USERNAME => dmcbride | DGN FILE => 80k8801a001.dgn | CU 08381 | EA 0K8801

Dist	COUNTY	ROUTE	POST MILES TOTAL PROJECT	SHEET No.	TOTAL SHEETS
08	SBd	62	7.6/8.5	16	32

Sidhartha Chowdhury 12-21-09
REGISTERED CIVIL ENGINEER DATE

SIDHARTHA CHOWDHURY No. 55418 Exp. 12-31-10 CIVIL — REGISTERED PROFESSIONAL ENGINEER — STATE OF CALIFORNIA

02-16-10
PLANS APPROVAL DATE

THE STATE OF CALIFORNIA OR ITS OFFICERS OR AGENTS SHALL NOT BE RESPONSIBLE FOR THE ACCURACY OR COMPLETENESS OF SCANNED COPIES OF THIS PLAN SHEET.

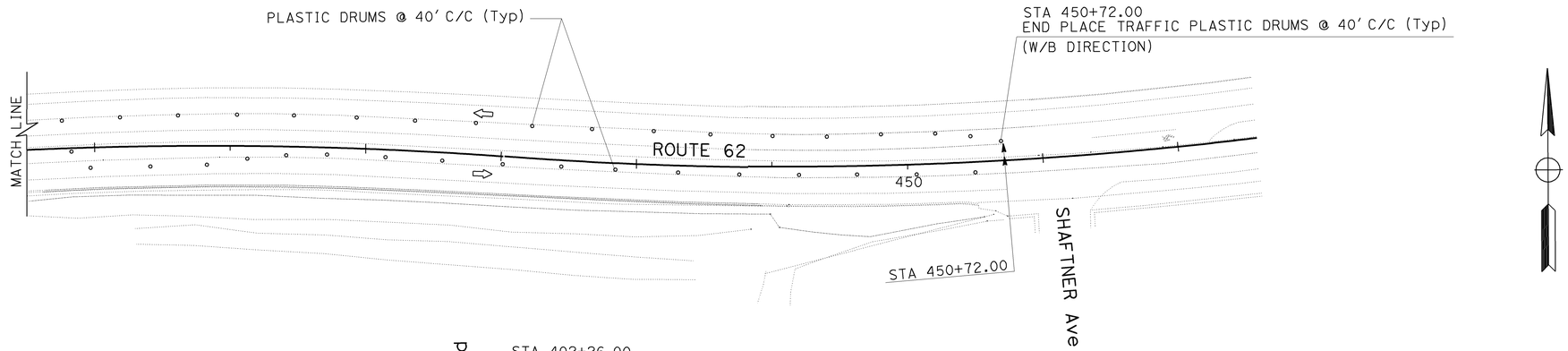

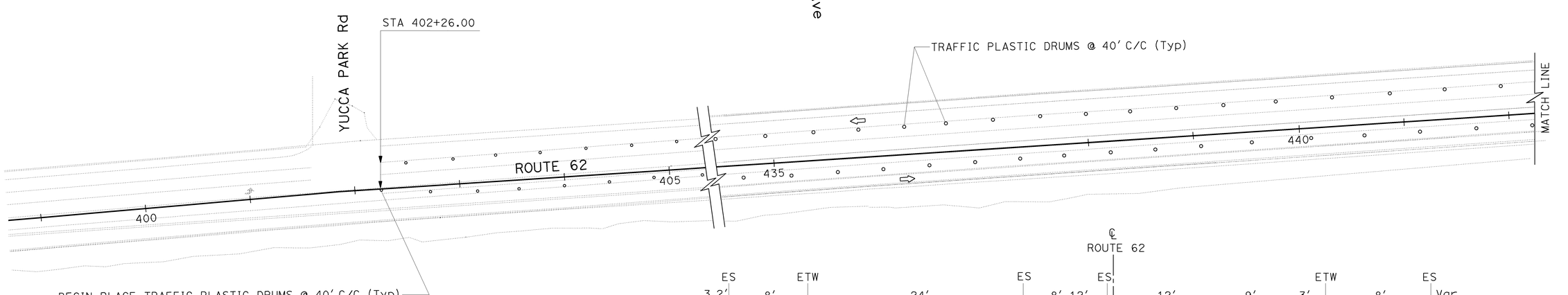

LEGEND:

○ TRAFFIC DRUM
⇨ DIRECTION OF TRAVEL

NOTES:

1. CONTRACTOR SHALL KEEP TRAFFIC PLASTIC DRUMS AFTER END OF EACH DAY'S WORK DURING CONSTRUCTION AS SHOWN ON THE PLAN.
2. REFER TO STANDARD PLANS T11, T12 AND T17 FOR LANE CLOSURE.
3. CONTRACTOR SHALL PLACE TEMPORARY CRASH CUSHIONS ARRAY TYPE 'TB11' AT EACH END OF THE MEDIAN BARRIER AT THE END OF EACH DAY'S WORK.

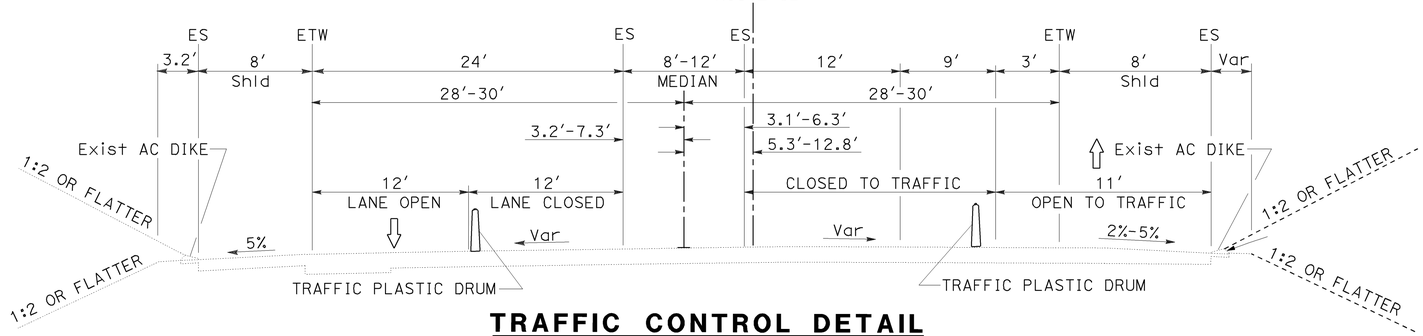

TRAFFIC CONTROL DETAIL
DRAINAGE WORK - MEDIAN AND INSIDE LANES
ROUTE 62
(STA 432+80.00 TO STA 446+20.00)

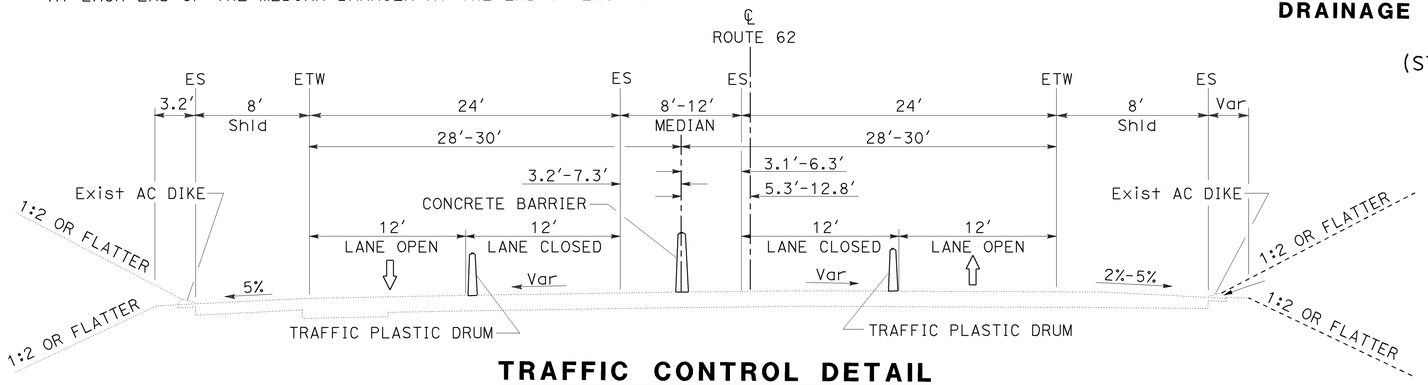

TRAFFIC CONTROL DETAIL
ROUTE 62
STA 402+26.00 TO STA 432+80.00
AND STA 446+20.00 TO STA 450+72.00

TRAFFIC HANDLING PLAN
STAGE 1A
NO SCALE

THIS PLAN ACCURATE FOR TRAFFIC HANDLING WORK ONLY

TH-1

STATE OF CALIFORNIA - DEPARTMENT OF TRANSPORTATION
Caltrans® TRAFFIC DESIGN B
FUNCTIONAL SUPERVISOR: LARRY SARTORI
CALCULATED-DESIGNED BY
CHECKED BY
REVISED BY
DATE REVISED
SIDHARTHA CHOWDHURY
LARRY SARTORI

LAST REVISION DATE PLOTTED => 16-FEB-2010
12-21-09 TIME PLOTTED => 13:21

BORDER LAST REVISED 4/11/2008
RELATIVE BORDER SCALE IS IN INCHES 0 1 2 3
USERNAME => dmcbride
DGN FILE => 80k880md001.dgn
CU 08381
EA 0K8801

Dist	COUNTY	ROUTE	POST MILES TOTAL PROJECT	SHEET No.	TOTAL SHEETS
08	SBd	62	7.6/8.5	17	32

Sidhartha Chowdhury 12-21-09
REGISTERED CIVIL ENGINEER DATE

02-16-10
PLANS APPROVAL DATE

REGISTERED PROFESSIONAL ENGINEER — SIDHARTHA CHOWDHURY — No. 55418 — Exp. 12-31-10 — CIVIL — STATE OF CALIFORNIA

THE STATE OF CALIFORNIA OR ITS OFFICERS OR AGENTS SHALL NOT BE RESPONSIBLE FOR THE ACCURACY OR COMPLETENESS OF SCANNED COPIES OF THIS PLAN SHEET.

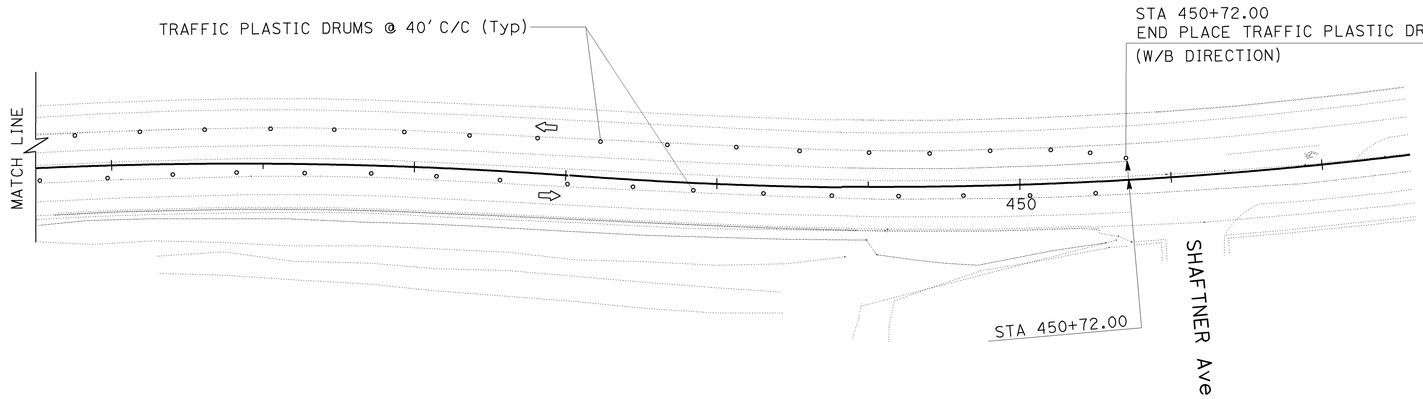

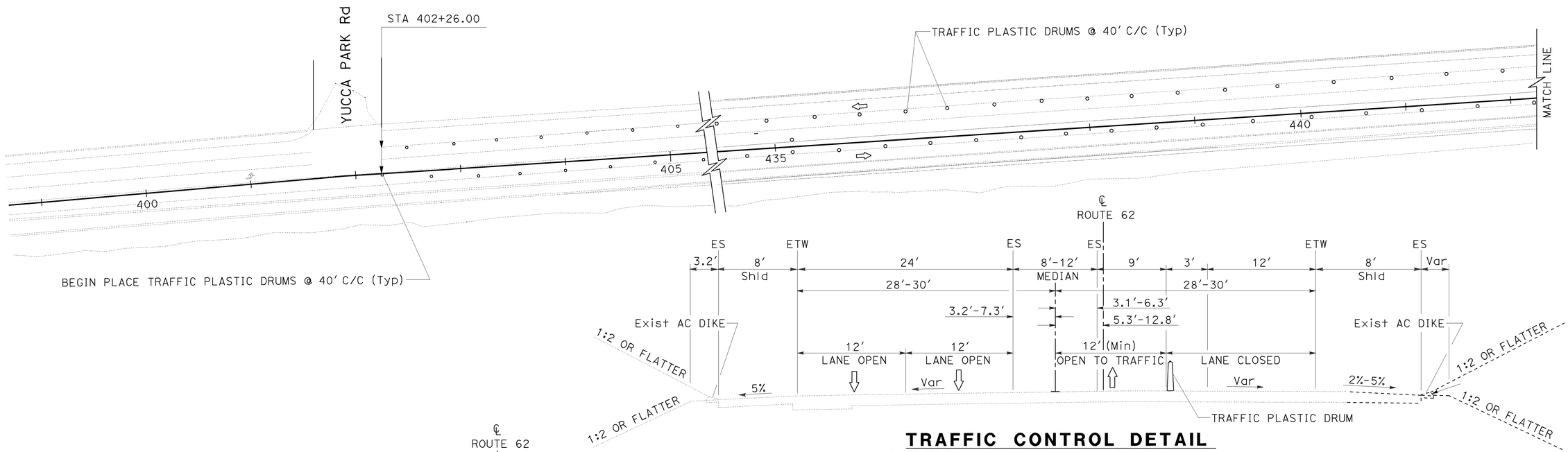

TRAFFIC CONTROL DETAIL
DRAINAGE WORK - OUTSIDE LANES
(STA 432+80.00 TO STA 446+20.00)

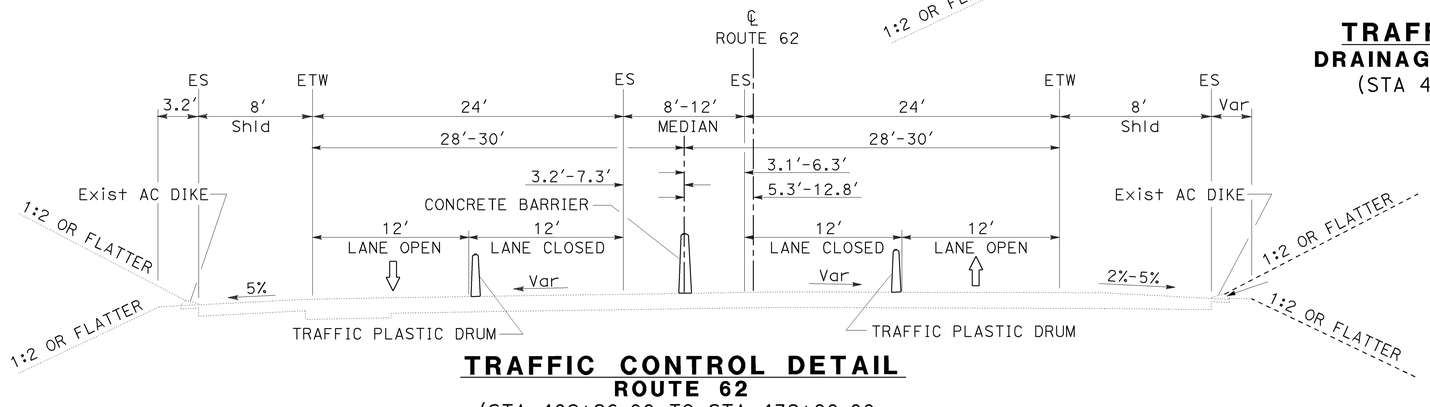

TRAFFIC CONTROL DETAIL
ROUTE 62
(STA 402+26.00 TO STA 432+80.00
AND STA 446+20.00 TO STA 450+72.00)

TRAFFIC HANDLING PLAN
STAGE 1B
NO SCALE

THIS PLAN ACCURATE FOR TRAFFIC HANDLING WORK ONLY

TH-2

STATE OF CALIFORNIA - DEPARTMENT OF TRANSPORTATION
Caltrans® TRAFFIC DESIGN B
FUNCTIONAL SUPERVISOR: LARRY SARTORI
CALCULATED-DESIGNED BY: SIDHARTHA CHOWDHURY
CHECKED BY: LARRY SARTORI
REVISED BY | DATE REVISED

LAST REVISION DATE PLOTTED => 16-FEB-2010
12-21-09 TIME PLOTTED => 13:22

BORDER LAST REVISED 4/11/2008
RELATIVE BORDER SCALE IS IN INCHES 0 1 2 3
USERNAME => dmcbride
DGN FILE => 80k880md002.dgn
CU 08381
EA 0K8801

Dist	COUNTY	ROUTE	POST MILES TOTAL PROJECT	SHEET No.	TOTAL SHEETS
08	SBd	62	7.6/8.5	18	32

Sidhartha Chowdhury 12-21-09
REGISTERED CIVIL ENGINEER DATE

02-16-10
PLANS APPROVAL DATE

REGISTERED PROFESSIONAL ENGINEER — SIDHARTHA CHOWDHURY — No. 55418 — Exp. 12-31-10 — CIVIL — STATE OF CALIFORNIA

THE STATE OF CALIFORNIA OR ITS OFFICERS OR AGENTS SHALL NOT BE RESPONSIBLE FOR THE ACCURACY OR COMPLETENESS OF SCANNED COPIES OF THIS PLAN SHEET.

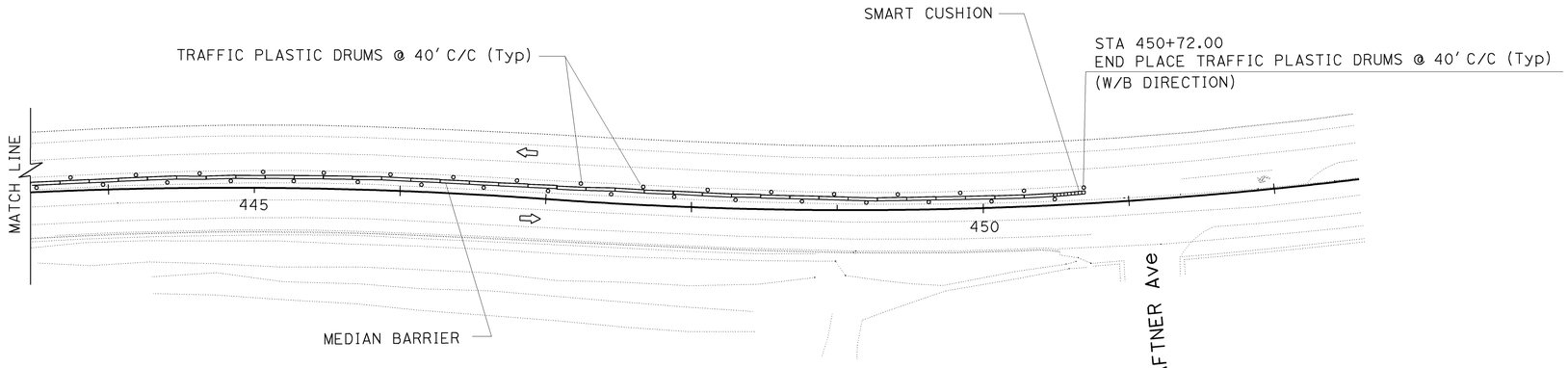

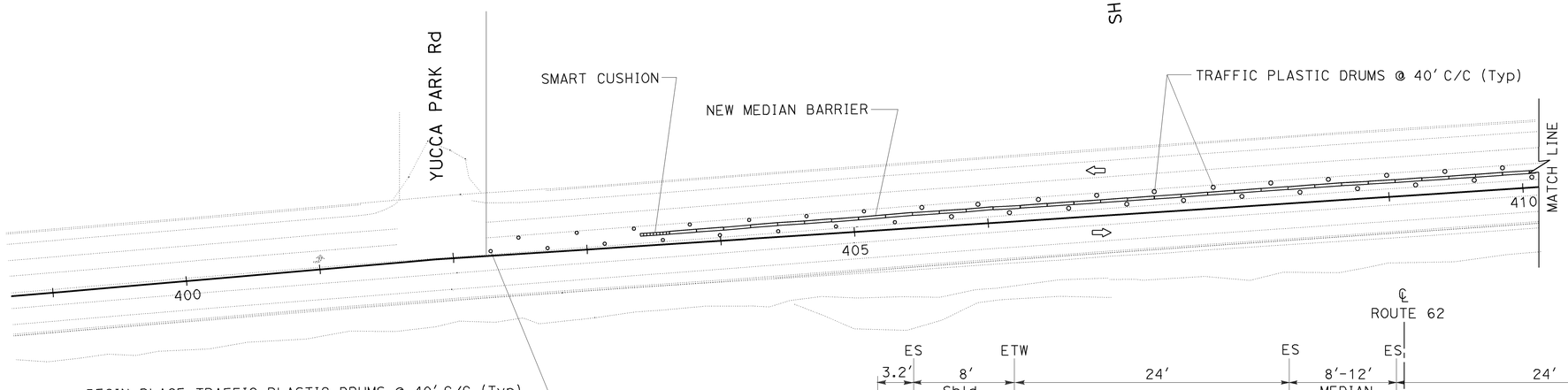

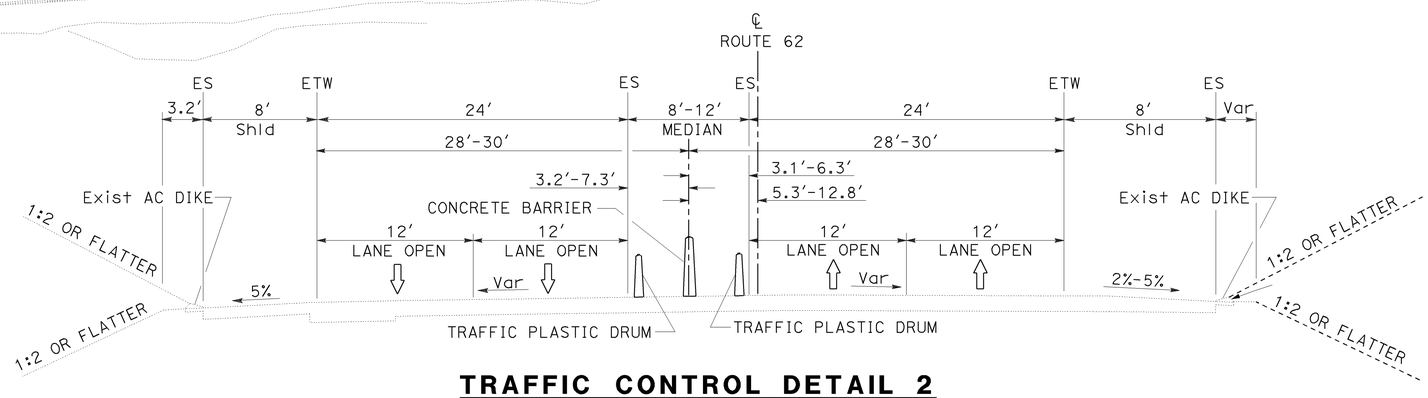

TRAFFIC CONTROL DETAIL 2
ROUTE 62
(DURING NON-WORKING HOURS)

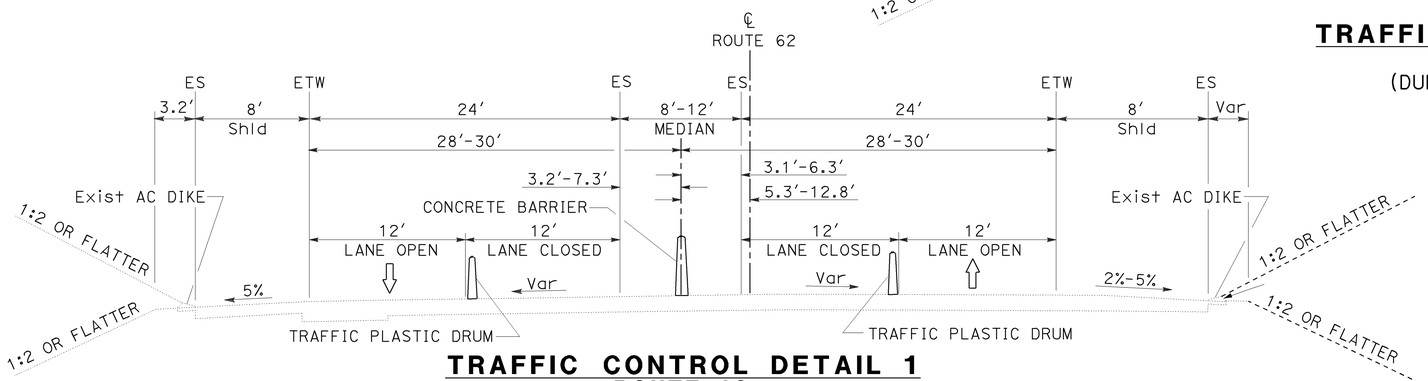

TRAFFIC CONTROL DETAIL 1
ROUTE 62
(DURING WORKING HOURS)

TRAFFIC HANDLING PLAN
STAGE 2
NO SCALE

THIS PLAN ACCURATE FOR TRAFFIC HANDLING WORK ONLY

TH-3

REVISED BY | DATE REVISED
SIDHARTHA CHOWDHURY | LARRY SARTORI
CALCULATED-DESIGNED BY | CHECKED BY
FUNCTIONAL SUPERVISOR: LARRY SARTORI

STATE OF CALIFORNIA - DEPARTMENT OF TRANSPORTATION
Caltrans® TRAFFIC DESIGN B

LAST REVISION | DATE PLOTTED => 16-FEB-2010 | TIME PLOTTED => 13:22 | 12-21-09

BORDER LAST REVISED 4/11/2008 | RELATIVE BORDER SCALE IS IN INCHES 0 1 2 3 | USERNAME => dmcbride | DGN FILE => 80k880md003.dgn | CU 08381 | EA 0K8801

Dist	COUNTY	ROUTE	POST MILES TOTAL PROJECT	SHEET No.	TOTAL SHEETS
08	SBd	62	7.6/8.5	19	32

Sidhartha Chowdhury 12-21-09
REGISTERED CIVIL ENGINEER DATE

02-16-10
PLANS APPROVAL DATE

REGISTERED PROFESSIONAL ENGINEER
SIDHARTHA CHOWDHURY
No. 55418
Exp. 12-31-10
CIVIL
STATE OF CALIFORNIA

THE STATE OF CALIFORNIA OR ITS OFFICERS OR AGENTS SHALL NOT BE RESPONSIBLE FOR THE ACCURACY OR COMPLETENESS OF SCANNED COPIES OF THIS PLAN SHEET.

LEGEND:

(X) ROAD SIGN NUMBER

1- POST SIGN

(XX) TEMPORARY STRIPING DETAIL

NOTES:

1. NEW STRIPING SHALL BE DONE WITHIN THE LIMITS AS SHOWN ON THE PLAN. CONTRACTOR SHALL MATCH NEW STRIPING WITH EXISTING.
2. LOCATION OF R4-7, R5-1 AND R5-1A SIGNS SHOWN ON THE PLAN ARE APPROXIMATE. FINAL LOCATION FOR THESE SIGNS SHALL BE DECIDED DURING CONSTRUCTION BY THE RESIDENT ENGINEER.
3. CONTRACTOR SHALL RE-STRIPE ALL EXISTING STRIPING (SEE SHEETS L-3 AND L-4) THAT ARE REMOVED DURING PIPE LAYING OPERATION.

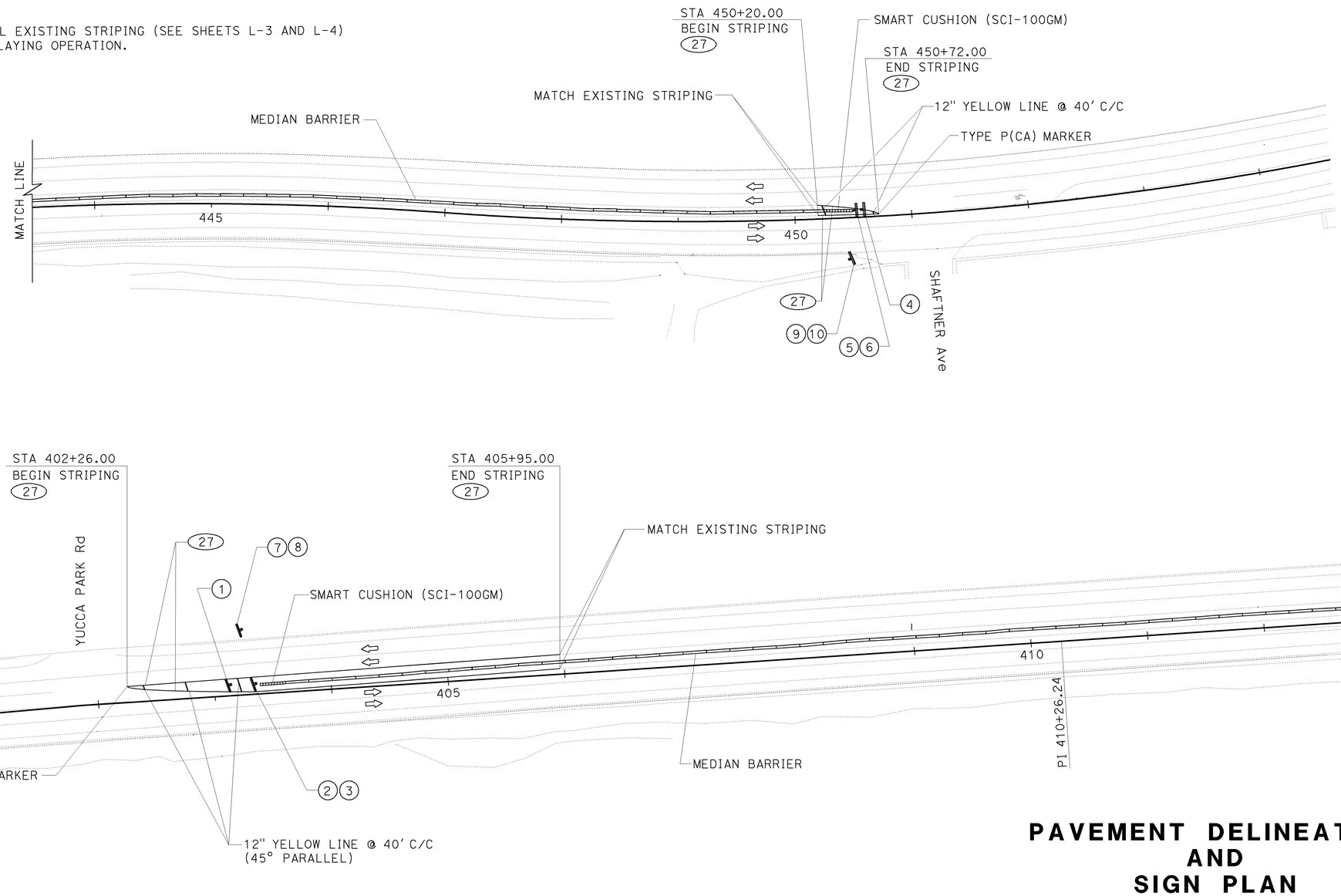

PAVEMENT DELINEATION AND SIGN PLAN

NO SCALE

PD-1

THIS PLAN ACCURATE FOR PAVEMENT DELINEATION AND SIGN WORK ONLY

STATE OF CALIFORNIA - DEPARTMENT OF TRANSPORTATION
Caltrans® TRAFFIC DESIGN B

FUNCTIONAL SUPERVISOR	LARRY SARTORI
CALCULATED-DESIGNED BY	SIDHARTHA CHOWDHURY
CHECKED BY	LARRY SARTORI
REVISED BY	
DATE REVISED	

LAST REVISION DATE PLOTTED => 16-FEB-2010
12-21-09 TIME PLOTTED => 13:22

BORDER LAST REVISED 4/11/2008

RELATIVE BORDER SCALE IS IN INCHES 0 1 2 3

USERNAME => dmcbride
DGN FILE => 80k880na001.dgn

CU 08381

EA 0K8801

Dist	COUNTY	ROUTE	POST MILES TOTAL PROJECT	SHEET No.	TOTAL SHEETS
08	SBd	62	7.6/8.5	20	32

Sidhartha Chowdhury 12-21-09
REGISTERED CIVIL ENGINEER DATE

SIDHARTHA CHOWDHURY No. 55418 Exp. 12-31-10 CIVIL — REGISTERED PROFESSIONAL ENGINEER — STATE OF CALIFORNIA

02-16-10
PLANS APPROVAL DATE

THE STATE OF CALIFORNIA OR ITS OFFICERS OR AGENTS SHALL NOT BE RESPONSIBLE FOR THE ACCURACY OR COMPLETENESS OF SCANNED COPIES OF THIS PLAN SHEET.

NOTE:

1. PAVEMENT MARKERS SHALL BE PLACED BEFORE SPRAYABLE THERMOPLASTIC STRIPE IS APPLIED.

PAVEMENT DELINEATION QUANTITIES

LOCATION	STRIPING LIMIT		STRIPING DETAIL No.	THERMOPLASTIC TRAFFIC STRIPE (SPRAYABLE)		PAVEMENT MARKER			REMOVE THERMOPLASTIC TRAFFIC STRIPE		REMOVE PAVEMENT MARKER			
	FROM STATION	TO STATION		4" YELLOW	4" WHITE	NON RETRO-REFLECTIVE	RETRO-REFLECTIVE		4" YELLOW	4" WHITE	NON RETRO-REFLECTIVE	RETRO-REFLECTIVE		
						TYPE A	TYPE G	TYPE H			TYPE A	TYPE D	TYPE G	TYPE H
				FT	FT	EA	EA	EA	FT	FT	EA	EA	EA	EA
INTERSECTION OF ROUTE 62 AND YUCCA PARK ROAD	402+26.00	405+95.00	19						924			20		40
			27	1476				32						
INTERSECTION OF ROUTE 62 AND SHAFTNER AVENUE	450+20.00	450+72.00	27	104				5	104					5
BETWEEN YUCCA PARK ROAD AND SHAFTNER AVENUE AT DRAINAGE CULVERT LOCATIONS	434+00.00	445+00.00	13M		12	4	1			12	4		1	
			27	24				1	24					1
			27B		24					24				
SUBTOTAL				1604	36	4	1	38	1052	36	4	20	1	46
TOTAL				1640		43			1088		71			

PAVEMENT DELINEATION QUANTITIES

LOCATION	DELINEATION LIMIT		THERMOPLASTIC PAVEMENT MARKING	
	FROM STATION	TO STATION	DESCRIPTION	SQFT
INTERSECTION OF ROUTE 62 AND YUCCA PARK ROAD	402+26.00	405+95.00	12" YELLOW DIAGONAL LINE	35
INTERSECTION OF ROUTE 62 AND SHAFTNER AVENUE	450+20.00	450+72.00	12" YELLOW DIAGONAL LINE	15
			TOTAL	50

MARKER

DESCRIPTION	EA (N)
TYPE P (CA)	2
MEDIAN BARRIER MARKER	390

(N) - NOT A SEPARATE PAY ITEM; FOR INFORMATION ONLY

PAVEMENT DELINEATION QUANTITIES

PDQ-1

REVISED BY | DATE REVISED
SIDHARTHA CHOWDHURY | LARRY SARTORI
CALCULATED-DESIGNED BY | CHECKED BY
FUNCTIONAL SUPERVISOR: LARRY SARTORI
STATE OF CALIFORNIA - DEPARTMENT OF TRANSPORTATION
Caltrans® TRAFFIC DESIGN B

LAST REVISION DATE PLOTTED => 16-FEB-2010
12-21-09 TIME PLOTTED => 13:22

Dist	COUNTY	ROUTE	POST MILES TOTAL PROJECT	SHEET No.	TOTAL SHEETS
08	SBd	62	7.6/8.5	21	32

Sidhartha Chowdhury 12-21-09
REGISTERED CIVIL ENGINEER DATE

02-16-10
PLANS APPROVAL DATE

REGISTERED PROFESSIONAL ENGINEER
SIDHARTHA CHOWDHURY
No. 55418
Exp. 12-31-10
CIVIL
STATE OF CALIFORNIA

THE STATE OF CALIFORNIA OR ITS OFFICERS OR AGENTS SHALL NOT BE RESPONSIBLE FOR THE ACCURACY OR COMPLETENESS OF SCANNED COPIES OF THIS PLAN SHEET.

LEGEND:

x = APPLICALBLE
B = BLACK
W = WHITE
R = RED
L = LENGTH OF SIGN
D = DEPTH OF SIGN
(XX) SIGN No.

NOTES:

1. NEW R4-7, R5-1 AND R5-1A SIGNS SHALL BE FURNISHED AND INSTALLED BY THE THE CONTRACTOR AT LOCATIONS SHOWN ON THE PLAN IN COMPLIANCE WITH CALTRANS STANDARD PLANS RS1, RS2 AND RS4 FOR REGULATORY SIGN INSTALLATIONS.
2. LOCATIONS OF NEW R4-7, R5-1 AND R5-1A SIGNS SHOWN ON THE PLAN ARE APPROXIMATE. FINAL LOCATION FOR INSTALLATION OF THE REGULATORY SIGNS SHALL BE AS DETERMINED BY THE RESIDENT ENGINEER.
3. CALIFORNIA SIGN CODES ARE DESIGNATED BY (CA); OTHERWISE, FEDERAL SIGN CODES ARE SHOWN

SIGN PANEL MATERIAL QUANTITIES

SIGN No.	SIGN CODE	SIGN SIZE L X D	FURNISH PANEL SIGN SQFT	SIGN No.	ROADSIDE SIGN	No. POST AND SIZE	BACKGROUND		LEGEND		ROADSIDE SINGLE-SHEET UNFRAMED ALUMINUM	REMARKS
			SINGLE SHEET ALUMINUM (0.06" UNFRAMED)				SHEETING COLOR	RETRO-REFLECTIVE ASTM TYPE	SHEETING COLOR	CIRCLE SYMBOL	0.06 in	
		(in x in)			EA	(in x in)						
(1)	R4-7	24 X 30	5.0	(1)	1	1 - 4 X 4	W	×	B	-	×	INSTALL SINGLE POST SIGN ON MEDIAN FEBT (SEE PLAN)
(2)	R5-1	36 X 36	9.0	(2)	1	1 - 4 X 4	W	×	W	R	×	INSTALL SINGLE POST SIGN ON MEDIAN FEBT (SEE PLAN)
(3)	R5-1A	36 X 21	5.25	(3)			R	×	W	-	×	INSTALL SINGLE POST SIGN ON MEDIAN FEBT (SEE PLAN)
(4)	R4-7	24 X 30	5.0	(4)	1	1 - 4 X 4	W	×	B	-	×	INSTALL SINGLE POST SIGN ON MEDIAN FWBT (SEE PLAN)
(5)	R5-1	36 X 36	9.0	(5)	1	1 - 4 X 4	W	×	W	R	×	INSTALL SINGLE POST SIGN ON MEDIAN FWBT (SEE PLAN)
(6)	R5-1A	36 X 21	5.25	(6)			W	×	W	-	×	INSTALL SINGLE POST SIGN ON MEDIAN FWBT (SEE PLAN)
(7)	R5-1	36 X 36	9.0	(7)	1	1 - 4 X 4	W	×	W	R	×	INSTALL SINGLE POST SIGN ON R+ OF SHOULDER FEBT (SEE PLAN)
(8)	R5-1A	36 X 21	5.25	(8)			R	×	W	-	×	INSTALL SINGLE POST SIGN ON R+ OF SHOULDER FEBT (SEE PLAN)
(9)	R5-1	36 X 36	9.0	(9)	1	1 - 4 X 4	W	×	W	R	×	INSTALL SINGLE POST SIGN ON R+ OF SHOULDER FWBT (SEE PLAN)
(10)	R5-1A	36 X 21	5.25	(10)			W	×	W	-	×	INSTALL SINGLE POST SIGN ON R+ OF SHOULDER FWBT (SEE PLAN)
		TOTAL	67.0		6							

SIGN QUANTITIES

SQ-1

REVISED BY | DATE REVISED
CALCULATED-DESIGNED BY: SIDHARTHA CHOWDHURY | CHECKED BY: LARRY SARTORI
FUNCTIONAL SUPERVISOR: LARRY SARTORI
STATE OF CALIFORNIA - DEPARTMENT OF TRANSPORTATION
Caltrans® TRAFFIC DESIGN B

LAST REVISION | DATE PLOTTED => 16-FEB-2010
12-21-09 | TIME PLOTTED => 13:22

BORDER LAST REVISED 4/11/2008 | RELATIVE BORDER SCALE IS IN INCHES 0 1 2 3 | USERNAME => dmcbride | DGN FILE => 80k880oc001.dgn | CU 08381 | EA 0K8801

Dist	COUNTY	ROUTE	POST MILES TOTAL PROJECT	SHEET No.	TOTAL SHEETS
08	SBd	62	7.6/8.5	22	32

12-21-09
REGISTERED CIVIL ENGINEER DATE

02-16-10
PLANS APPROVAL DATE

REGISTERED PROFESSIONAL ENGINEER
HAISSAM YAHYA
No. 56288
Exp. 12-31-10
CIVIL
STATE OF CALIFORNIA

THE STATE OF CALIFORNIA OR ITS OFFICERS OR AGENTS SHALL NOT BE RESPONSIBLE FOR THE ACCURACY OR COMPLETENESS OF SCANNED COPIES OF THIS PLAN SHEET.

NOTE:

1. EXACT LOCATIONS TO BE DETERMINED BY ENGINEER

CONCRETE MEDIAN BARRIER

STATION	TYPE 60G	TYPE 60	REMARKS
	LF		
403+61.00 TO 446+80.00	4319		*
446+80.00 To 447+15.00	35		TRANSITION *
447+15.00 To 450+11.00		296	*
TOTAL	4354	296	

* BARRIER MARKERS REQUIRED

CRASH CUSHION

ITEM	QUANTITY
	EA
SMART CUSHION, (SCI-100GM)	2

METAL BEAM GUARD RAILING

LOCATION	MGBR (STEEL POST)	ALTERNATIVE FLARED TERMINAL SYSTEM	REMOVE TERMINAL SYSTEM (N)	REMOVE EXISTING MBGR
	LF	EA	EA	LF
STA 425+84.42, 42.85' Lt TO STA 435+22.72, 43.55' Lt	942.00			
STA 425+84.42, 42.85' Lt TO STA 426+46.97, 43.81' Lt				63.00
STA 435+22.72, 43.55' Lt TO STA 435+69.02, 46.55' Lt		1		
STA 426+46.97, 43.81' Lt TO STA 426+84.03, 46.89' Lt			1	37.00
TOTAL	942.00	1	1	100

(N) - NOT A SEPARATE PAY ITEM; FOR INFORMATION ONLY

HOT MIX ASPHALT AND DRAINAGE QUANTITES

LOCATION	DRAINAGE SYSTEM No.	MINOR CONCERTE (MINOR STRUCTURE)	18" CORRUGATED STEEL PIPE (0.079" THICK)	18" SLOTTED CORRUGATED STEEL PIPE (0.079" THICK)	18" STEEL FLARED END SECTION	HMA (TYPE A)	MISCELLANEOUS IRON AND STEEL	GRADE TYPE 24-9 (N)	CLASS2 AGGREGATE BASE
STATION		CY	LF	LF	EA	TON	LB	EA	CY
434+00.00	1	1.24	50		1	33	263	1	43
440+00.00	2	1.24	51		1	33	263	1	43
445+00.00	3	1.24	51		1	34	263	1	44
434+00.00 TO 450+00.00				1600		40			40
TOTAL		3.72	152	1600	3	140	789		130

(N) - NOT A SEPARATE PAY ITEM; FOR INFORMATION ONLY

RECONSTRUCT SURVEY MONUMENT

EA
10

SUMMARY OF QUANTITIES

Q-1

REVISED BY | DATE REVISED
PARWAZ KHASRAW | HAISSAM YAHYA
CALCULATED-DESIGNED BY | CHECKED BY
FUNCTIONAL SUPERVISOR: HAISSAM YAHYA
STATE OF CALIFORNIA - DEPARTMENT OF TRANSPORTATION
DESIGN DIVIDION

LAST REVISION | DATE PLOTTED => 16-FEB-2010
12-21-09 | TIME PLOTTED => 13:22

BORDER LAST REVISED 4/11/2008 | RELATIVE BORDER SCALE IS IN INCHES 0 1 2 3 | USERNAME => dmcbride | DGN FILE => 80k880pa001.dgn | CU 08367 | EA 0K8801

DIST	COUNTY	ROUTE	POST MILES TOTAL PROJECT	SHEET NO.	TOTAL SHEETS
08	SBd	62	7.6/8.5	23	32

Mark S. Turner
PROFESSIONAL LAND SURVEYOR

June 30, 2006
PLANS APPROVAL DATE

LICENSED LAND SURVEYOR — Mark S. Turner No. 6228 Exp. 3-31-08 — STATE OF CALIFORNIA

The State of California or its officers or agents shall not be responsible for the accuracy or completeness of electronic copies of this plan sheet.

To accompany plans dated February 16, 2010

2006 REVISED STANDARD PLAN RSP A74

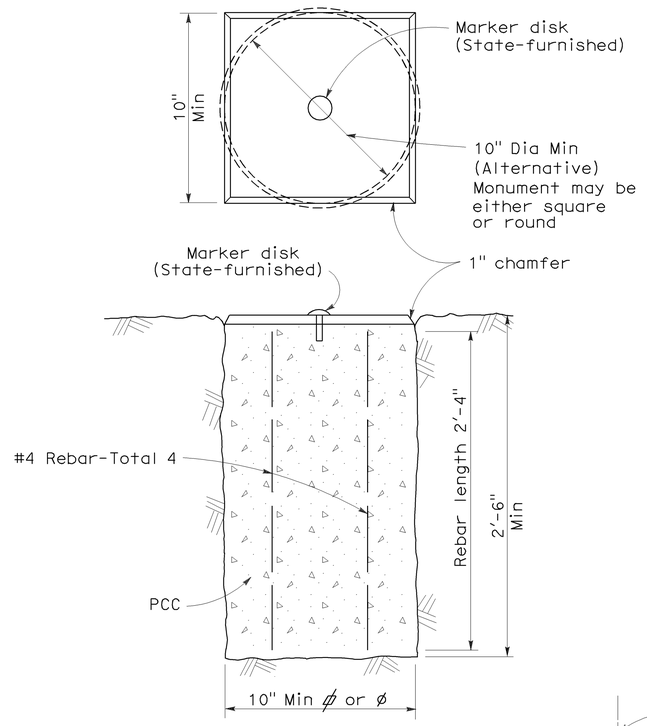

TYPE A

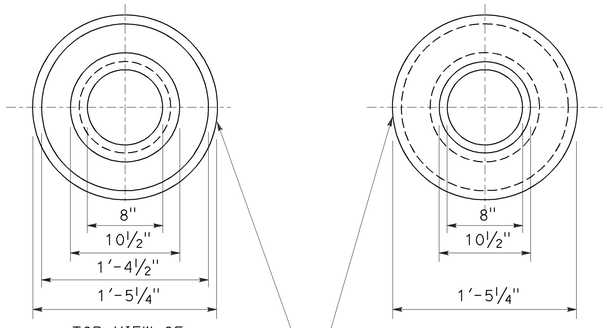

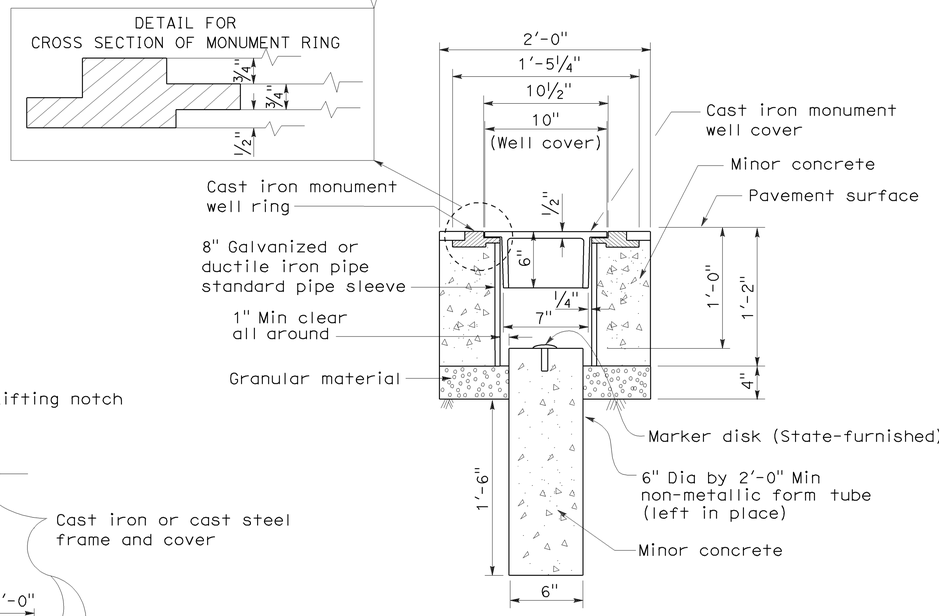

TYPE B

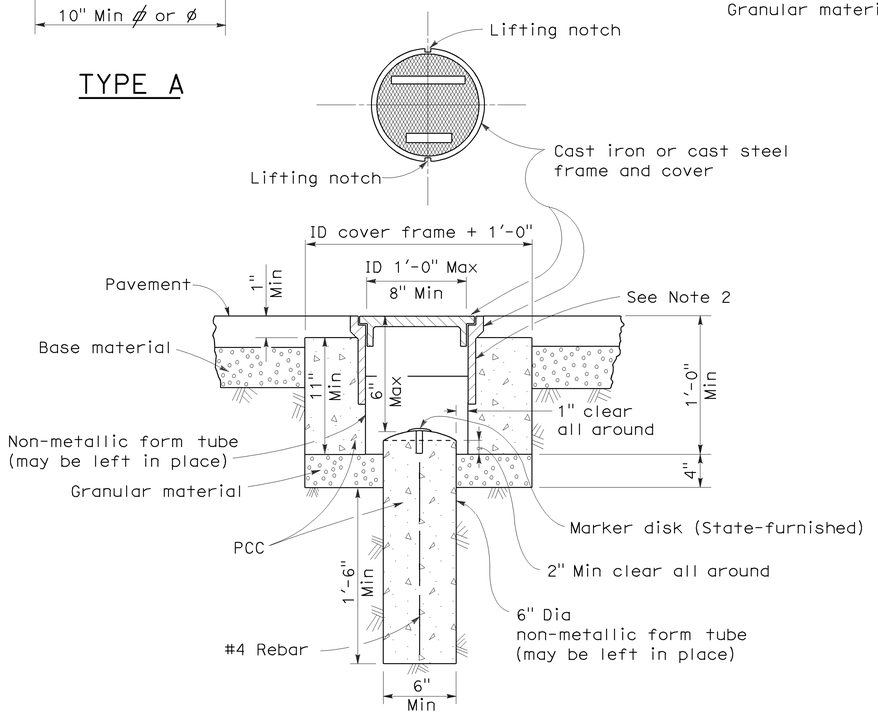

TYPE D
Alternative No. 1

NOTES:

1. The configuration of the cast iron or cast steel frame and cover may vary from that shown.
2. Frame shall be embedded in the concrete a minimum of 3".
3. Type D monument shall be either Alternative No. 1 or Alternative No. 2 at the contractor's option.
4. All portland cement concrete shall be Class 2 or minor concrete with 1" maximum aggregate.

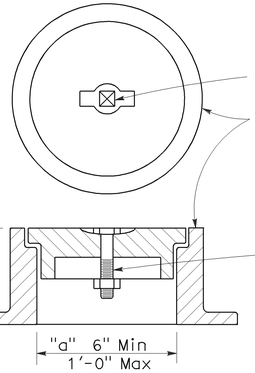

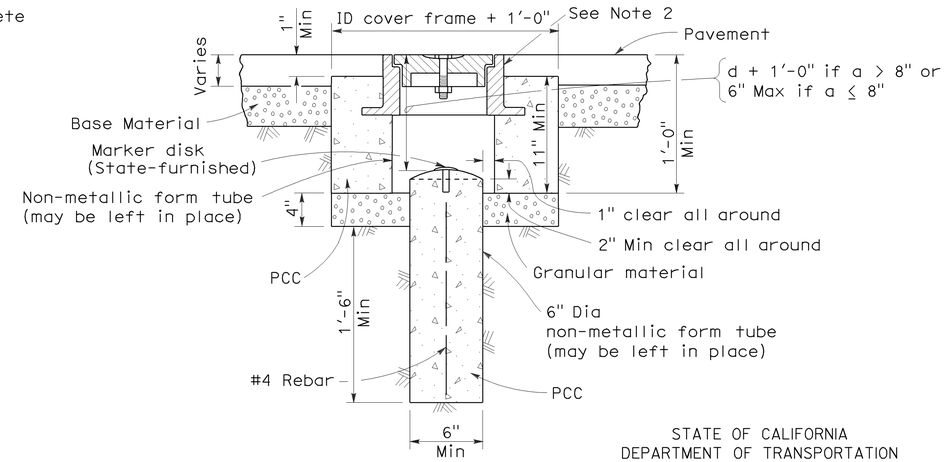

STATE OF CALIFORNIA
DEPARTMENT OF TRANSPORTATION

TYPE D
Alternative No. 2

SURVEY MONUMENTS

NO SCALE

RSP A74 DATED JUNE 30, 2006 SUPERSEDES STANDARD PLAN DATED MAY 1, 2006 - PAGE 28 OF THE STANDARD PLANS BOOK DATED MAY 2006.

REVISED STANDARD PLAN RSP A74

5-24-06

DIST	COUNTY	ROUTE	POST MILES TOTAL PROJECT	SHEET NO.	TOTAL SHEETS
08	SBd	62	7.6/8.5	24	32

Randell D. Hiatt
REGISTERED CIVIL ENGINEER

June 6, 2008
PLANS APPROVAL DATE

REGISTERED PROFESSIONAL ENGINEER — Randell D. Hiatt — No. C50200 — Exp. 6-30-09 — CIVIL — STATE OF CALIFORNIA

The State of California or its officers or agents shall not be responsible for the accuracy or completeness of electronic copies of this plan sheet.

To accompany plans dated February 16, 2010

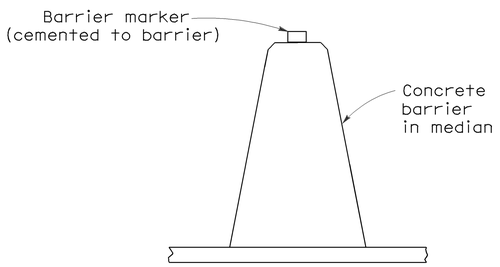

CONCRETE BARRIER TYPE 60 DELINEATION

See Notes 7 and 8

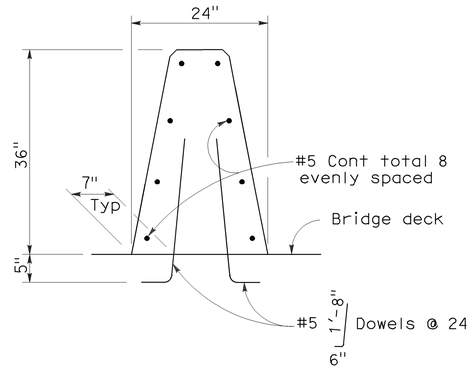

CONCRETE BARRIER TYPE 60A

Details similar to Type 60 except as noted.

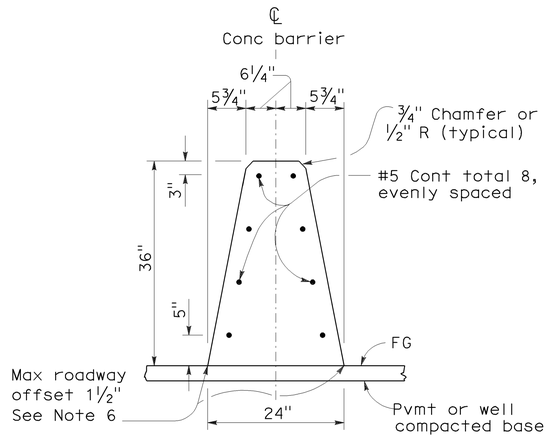

CONCRETE BARRIER TYPE 60

NOTES:

1. See Standard Plan A76B for details of Concrete Barrier Type 60 end anchors, connection to structures and transitions to Concrete Barrier Type 50 and Concrete Barrier Type 60S.
2. See Standard Plan A76C for Concrete Barrier Type 60 transitions at bridge column and sign pedestals.
3. Where glare screen is required on Concrete Barrier Type 60, use Concrete Barrier Type 60G.
4. Where the concrete barrier is added to the face of existing concrete structure, match existing weep holes.
5. Expansion joints in concrete barrier shall be located at all deck, pavement and principal wall joints. Expansion joint filler material shall be the same size as joint or ½" minimum.
6. Where roadway offset is greater than 1½", see Concrete Barrier Type 60C.
7. Barrier delineation to be used when required by the Special Provisions.
8. Spacing of barrier markers to match spacing of raised pavement markers on the adjacent median edgeline pavement delineation.
9. Reinforcing stirrup not required for roadway offsets less than 1'-0".
10. For roadway surfaces offset greater than 1½" to 3", no rebars required. For roadway surfaces offset greater than 3" to 8" use two #4 rebars at 3" above the lower roadway surface. For roadway surfaces offset greater than 8" to 12", use two #4 rebars at 3" above the lower roadway surface and two #4 rebars at 8" above the lower roadway surface. For roadway surfaces offset greater than 12" to 36", use two #4 rebars at 3" above the lower roadway surface and two #4 rebars at every 8" increment vertical spacing above the first two #4 rebars.

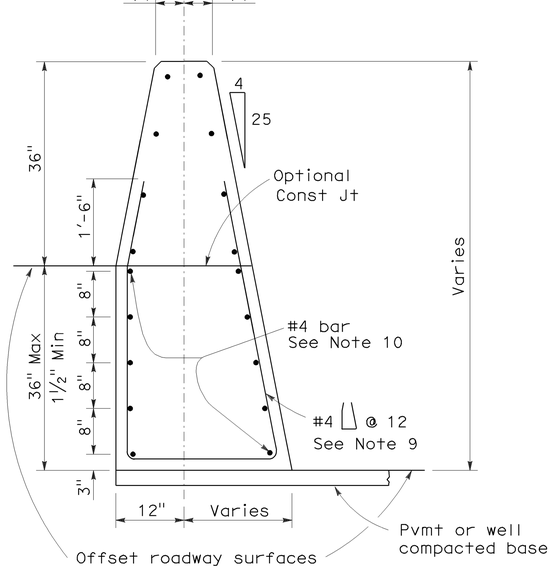

CONCRETE BARRIER TYPE 60C

Details similar to Type 60 except as noted.
Concrete barrier end anchor when necessary.
36" roadway surfaces offset shown.

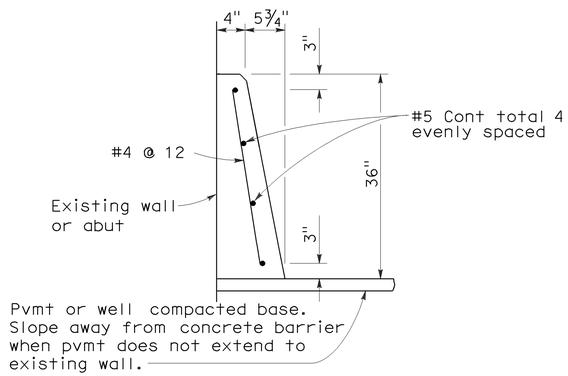

CONCRETE BARRIER TYPE 60D

STATE OF CALIFORNIA
DEPARTMENT OF TRANSPORTATION

CONCRETE BARRIER TYPE 60

NO SCALE

RSP A76A DATED JUNE 6, 2008 SUPERSEDES STANDARD PLAN A76A
DATED MAY 1, 2006 - PAGE 29 OF THE STANDARD PLANS BOOK DATED MAY 2006.

REVISED STANDARD PLAN RSP A76A

2006 REVISED STANDARD PLAN RSP A76A

5-21-08

DIST	COUNTY	ROUTE	POST MILES TOTAL PROJECT	SHEET NO.	TOTAL SHEETS
08	SBd	62	7.6/8.5	25	32

Raymond Don Tsztoo
REGISTERED CIVIL ENGINEER

January 18, 2008
PLANS APPROVAL DATE

REGISTERED PROFESSIONAL ENGINEER — Raymond Don Tsztoo — No. C37332 — Exp. 6-30-08 — CIVIL — STATE OF CALIFORNIA

The State of California or its officers or agents shall not be responsible for the accuracy or completeness of electronic copies of this plan sheet.

To accompany plans dated February 16, 2010

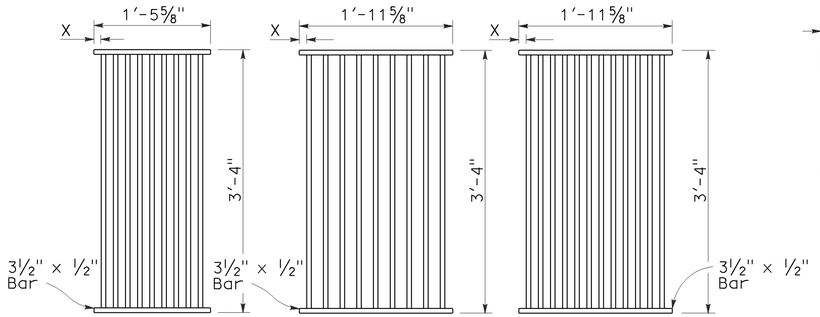

TYPE 18-9

1⅜" Clear spacing. Use within the roadbed on highways where bicycles and pedestrians are excluded.

TYPE 24-9

2" Clear spacing. Use in locations off the roadbed on all types of highways.

TYPE 24-12

1⅜" Clear spacing. Use within the roadbed on highways where bicycles and pedestrians are excluded.

RECTANGULAR GRATE DETAILS

(See table below)

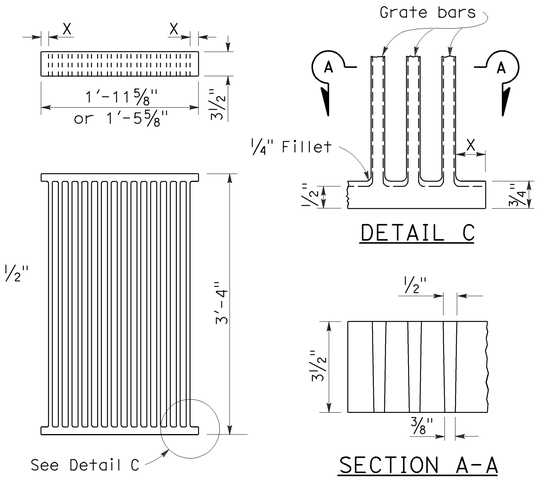

DETAIL C

SECTION A-A

ALTERNATIVE CAST NODULAR IRON GRATE OR CAST STEEL GRATE

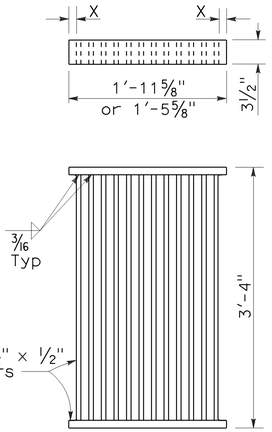

ALTERNATIVE WELDED GRATE

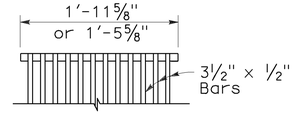

CAST END BLOCK

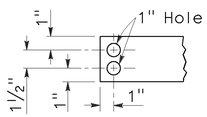

END OF BAR

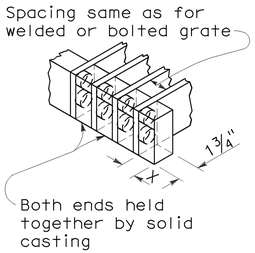

ALTERNATIVE CAST NODULAR IRON OR CAST STEEL END BLOCK GRATE

NOTES:

1. Grate type numbers refer to approximate width of grate in inches and number of bars, respectively.
2. Contractor has the option of using cast nodular iron, cast steel, welded, bolted, or cast end block grate.
3. See Special Provisions for requirements pertaining to galvanizing or asphalt dipping of grates and frames.
4. Rounded top of bars optional on all grates.
5. Pipe inlets with a grate shall be placed so that bars parallel direction of principle surface flow.
6. Full penetration butt welds may be substituted for the fillet welds on all anchors.
7. Standard square, hexagon, round or equivalent headed anchors may be substituted for the right angle hooks on the anchors shown on this plan.
8. Grate and frame weights are based on welded grates (weights of face angles, steps, protection bars, etc. are not included).

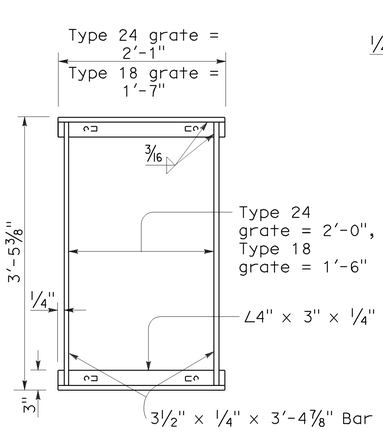

TYPICAL FRAME

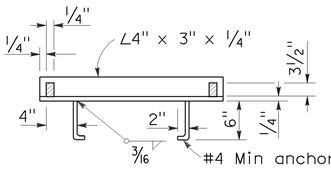

CROSS SECTION
(Thru frame)

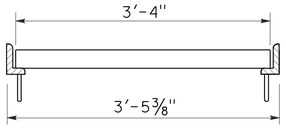

LONGITUDINAL SECTION
(Thru frame and grate)

RECTANGULAR FRAME DETAILS

(For all rectangular grates)

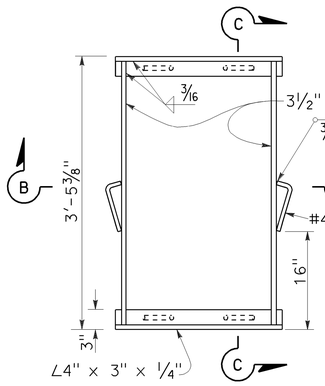

TYPICAL FRAME

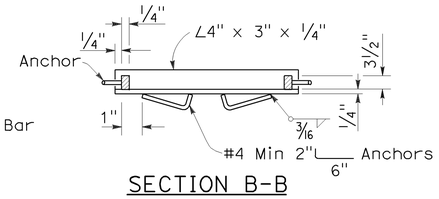

SECTION B-B

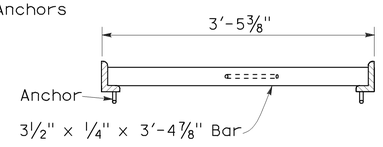

SECTION C-C

ALTERNATIVE ANCHOR FOR RECTANGULAR FRAME

(For details not shown, See Rectangular Frame Details)

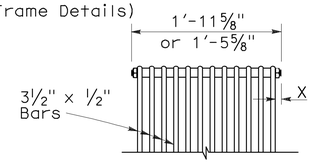

BOLTED END BLOCK

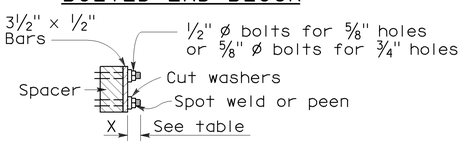

BOLTING DETAIL

ALTERNATIVE BOLTED GRATE

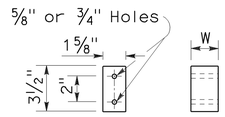

BAR SPACER

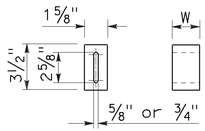

ALTERNATIVE SPACER
W = 1⅜" or 2"

GRATE BAR SPACING TABLE

TYPE	No. OF BARS	CLEAR BAR SPACING	X
18-9	9	1⅜"	1 1/16"
24-9	9	2"	1 9/16"
24-12	12	1⅜"	1¼"

INLET TYPE	COVER TYPE	WEIGHT LB
OS	PLATE	174
OL-7	PLATE	170
OL-10	PLATE	170
OL-14	PLATE	170
OL-21	PLATE	170
OCP	PLATE	112
OCPI	PLATE	112
OCPI	REDWOOD	42
OMP	PLATE	177
OMPI	PLATE	177

INLET TYPE	GRATE TYPE	No. OF GRATES	WEIGHT LB
GDO	24-12	2	634
GOL-7	24-12	1	326
GOL-10	24-12	1	326
GO,G1,G2,G3,G4 (TYPE 24)	24-9	1	263
	24-12	1	326
G4 (TYPE 18),G5,G6	18-9	1	249
GT1	18-9	2	498
GT2	18-9	2	498
GT3	24-12	2	652
GT4	24-12	2	652
TRASH RACK			22

BASIS FOR MISC IRON & STEEL FINAL PAY WEIGHTS FOR DRAINAGE INLETS

(See General Notes, No 8)

STATE OF CALIFORNIA
DEPARTMENT OF TRANSPORTATION

GRATE DETAILS

NO SCALE

RSP D77A DATED JANUARY 18, 2008 SUPERSEDES STANDARD PLAN D77A DATED MAY 1, 2006 - PAGE 155 OF THE STANDARD PLANS BOOK DATED MAY 2006.

REVISED STANDARD PLAN RSP D77A

12-14-07

DIST	COUNTY	ROUTE	POST MILES TOTAL PROJECT	SHEET NO.	TOTAL SHEETS
08	SBd	62	7.6/8.5	26	32

Raymond Don Tsztoo
REGISTERED CIVIL ENGINEER

June 6, 2008
PLANS APPROVAL DATE

Raymond Don Tsztoo No. C37332 Exp. 6-30-08 CIVIL — REGISTERED PROFESSIONAL ENGINEER — STATE OF CALIFORNIA

The State of California or its officers or agents shall not be responsible for the accuracy or completeness of electronic copies of this plan sheet.

To accompany plans dated February 16, 2010

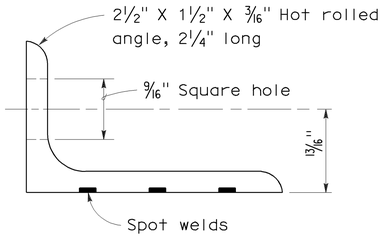

ANGLE

NOTES:

1. All ferrous metal coupling band connection hardware shall be galvanized or electroplated in accordance with the Standard Specifications.
2. Dimensions and thicknesses shown are minimum.
3. Spot welds shall develop minimum required strength of strap.
4. Fillet welds of equivalent strength may be substituted for spot welds or rivets.
5. Dimension depends upon whether end condition is lips up or lips down.

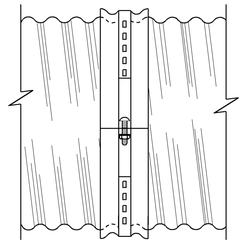

SIDE VIEW
ANGLE

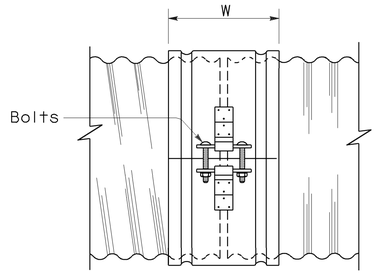

SIDE VIEW
SINGLE BAR AND STRAP

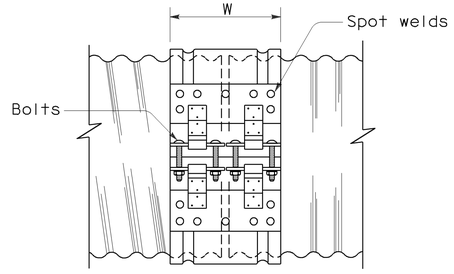

SIDE VIEW
DOUBLE BAR AND STRAP

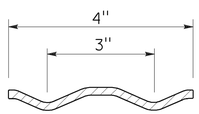

SECTION
H-4 HUGGER BAND

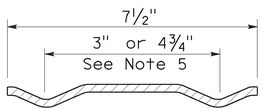

SECTION
H-7 HUGGER BAND

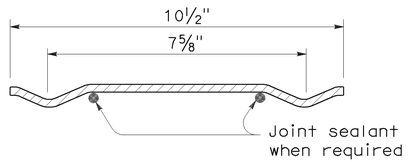

SECTION
H-10 HUGGER BAND

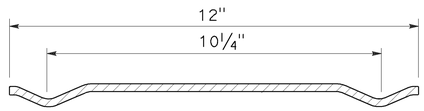

SECTION
H-12 HUGGER BAND

HUGGER COUPLING BANDS

STATE OF CALIFORNIA
DEPARTMENT OF TRANSPORTATION

CORRUGATED METAL PIPE COUPLING DETAILS No. 4 HUGGER COUPLING BANDS

NO SCALE

RSP D97D DATED JUNE 6, 2008 SUPERSEDES STANDARD PLAN D97D
DATED MAY 1, 2006 - PAGE 186 OF THE STANDARD PLANS BOOK DATED MAY 2006.

REVISED STANDARD PLAN RSP D97D

2006 REVISED STANDARD PLAN RSP D97D

3-24-08

DIST	COUNTY	ROUTE	POST MILES TOTAL PROJECT	SHEET NO.	TOTAL SHEETS
08	SBd	62	7.6/8.5	27	32

Raymond Don Tsztoo
REGISTERED CIVIL ENGINEER

June 6, 2008
PLANS APPROVAL DATE

Raymond Don Tsztoo, No. C37332, Exp. 6-30-08, CIVIL, REGISTERED PROFESSIONAL ENGINEER, STATE OF CALIFORNIA

The State of California or its officers or agents shall not be responsible for the accuracy or completeness of electronic copies of this plan sheet.

ANNULAR AND HELICAL PROFILE

COUPLING TYPE	PIPE CORRUGATION	PIPE SIZE	W OR A	PIPE WALL THICKNESS CSP	PIPE WALL THICKNESS CAP	BAND THICKNESS CSP	BAND THICKNESS CAP	BAR AND STRAP (CSP ONLY) STRAP THICKNESS	BOLTS Dia	BAR Dia	BAR YIELD STRENGTH	ANGLE DIMENSIONS CSP	ANGLE DIMENSIONS CAP	BOLTS (No.- Dia) CSP	BOLTS (No.- Dia) CAP	RIVETS ANGLE TO BAND CSP	RIVETS ANGLE TO BAND CAP	SPOT WELDS ANGLE TO BAND CSP
TWO PIECE INTEGRAL FLANGE	1½′ × ¼"	6"-10"	7"	0.052"-0.079"	0.048"-0.060"	0.052"	0.060"							2-⅜"	2-⅜"			
		12"-18"	7"	0.052"-0.079"		0.064"								2-½"				
	2⅔" × ½"	12"-24"	7"	0.052"-0.079"	0.060"-0.105"	0.064"	0.060"							2-½"	2-½"			
UNIVERSAL	2⅔" × ½"	THROUGH 36"	12"	0.052"-0.138"	0.060"-0.135"	0.052"	0.060"					2" × 2" × 3/16"	2" × 2" × 3/16"	3-½"	3-½"	3-⅜"	3-⅜"	3-½"
		42"-60"	12"	0.052"-0.168"	0.075"-0.164"	0.052"	0.060"					2" × 2" × 3/16"	2" × 2" × 3/16"	3-½"	3-½"	3-⅜"	3-⅜"	5-½"
		THROUGH 72"	12"	0.052"-0.168"	0.164"	0.052"	0.105"	0.079"	½"	⅞"	32 ksi	2" × 2" × 3/16"	2" × 2" × 3/16"	3-½"	3-½"	3-⅜"	3-⅜"	5-½"
		78"-84"	16¼"	0.168"		0.079"		DOUBLE 0.079"	½"	⅞"	32 ksi							
ANNULAR	2⅔" × ½"	THROUGH 36"	7"	0.064"-0.138"	0.060"-0.135"	0.052"	0.060"	0.079"	½"	⅞"	32 ksi	2" × 2" × 3/16"	2" × 2" × 3/16"	2-½"	2-½"	3-⅜"	3-⅜"	3-½"
		42"-72"	12"	0.064"-0.168"	0.075"-0.164"	0.052"	0.105"	0.079"	½"	⅞"	32 ksi	2" × 2" × 3/16"	2" × 2" × 3/16"	3-½"	3-½"	3-⅜"	3-⅜"	5-½"
		78"-84"	12"	0.168"		0.079"		0.109"	½"	⅞"	45 ksi	2" × 2" × 3/16"		3-½"		3-⅜"		5-½"
	3" × 1"	48"-90"	14"	0.064"-0.109"		0.052"		0.079"	½"	⅞"	32 ksi	2" × 2" × 3/16"		3-½"		3-⅜"		5-½"
		96"-120"	14"	0.079"-0.109"		0.052"		0.109"	½"	⅞"	45 ksi	2" × 2" × 3/16"		3-½"		4-⅜"		
		42"-108"	14"		0.060"-0.135"		0.060"						2" × 2" × 3/16"		3-½"		3-⅜"	
HELICAL	2⅔" × ½"	THROUGH 36"	12"	0.052"-0.138"	0.060"-0.135"	0.052"	0.060"	0.079"	½"	⅞"	32 ksi	2" × 2" × 3/16"	2" × 2" × 3/16"	3-½"	3-½"	3-⅜"	3-⅜"	3-½"
		42"-72"	12"	0.052"-0.168"	0.075"-0.164"	0.052"	0.060"	0.079"	½"	⅞"	32 ksi	2" × 2" × 3/16"	2" × 2" × 3/16"	3-½"	3-½"	3-⅜"	3-⅜"	5-½"
		78"-84"	12"	0.168"		0.079"		0.109"	½"	⅞"	45 ksi	2" × 2" × 3/16"		3-½"		3-⅜"		5-½"
	3" × 1"	48"-90"	14"	0.064"-0.109"		0.052"		0.079"	½"	⅞"	32 ksi	2" × 2" × 3/16"		3-½"		3-⅜"		5-½"
		96"-120"	14"	0.079"-0.109"		0.052"		0.109"	½"	⅞"	45 ksi	2" × 2" × 3/16"		3-½"		4-⅜"		
		42"-108"	14"		0.060"-0.135"		0.060"						2" × 2" × 3/16"		3-½"		3-⅜"	
HUGGER	2⅔" × ½" REROLLED END	12"-54"	4"	0.052"-0.109"		0.052"						2½" × 1½" × 3/16"	2½" × 1½" × 3/16"	1-½"				3-½"
		60"-66"	4"	0.109"		0.064"						2½" × 1½" × 3/16"	2½" × 1½" × 3/16"	1-½"				3-½"
		36"-48"	4"	0.138"		0.064"						2½" × 1½" × 3/16"	2½" × 1½" × 3/16"	1-½"				3-½"
		THROUGH 72"	10½"	0.052"-0.168"		0.052"		0.079"	½"	⅞"	32 ksi							
		78"-84"	10½"	0.168"		0.079"		0.109"	½"	⅞"	45 ksi							
	3" × 1" REROLLED END	48"-90"	10½"	0.064"-0.109"		0.052"		0.079"	½"	⅞"	32 ksi							
		96"-120"	10½"	0.079"-0.109"		0.052"		0.109"	½"	⅞"	45 ksi							
	5" × 1" REROLLED END	48"-66"	7½"	0.064"-0.109"		0.064"		0.079"	½"	⅞"	32 ksi	2½" × 1½" × 3/16"	2½" × 1½" × 3/16"	1-½"				3-½"
		72"-90"	7½"	0.064"-0.079"		0.064"		0.079"	½"	⅞"	32 ksi	2½" × 1½" × 3/16"	2½" × 1½" × 3/16"	1-½"				3-½"
		48"-90"	7½"	0.064"-0.138"		0.064"		0.079"	½"	⅞"	32 ksi							
		48"-120"	12" SEE NOTE 11	0.064"-0.109"		0.064"		0.079"	½"	⅞"	32 ksi							
		48"-84"	12" SEE NOTE 11	0.138"		0.064"		0.079"	½"	⅞"	32 ksi							
		90"-120"	12" SEE NOTE 11	0.138"		0.064"		DOUBLE 0.079"	½"	⅞"	32 ksi							

SPIRAL RIB PROFILE

COUPLING TYPE	PIPE CORRUGATION	PIPE SIZE	W	PIPE WALL THICKNESS SSRP	PIPE WALL THICKNESS ASRP	BAND THICKNESS SSRP	BAND THICKNESS ASRP	BAR AND STRAP (SSRP ONLY) STRAP THICKNESS	BOLTS Dia	BAR Dia	BAR YIELD STRENGTH	ANGLE DIMENSIONS SSRP	ANGLE DIMENSIONS ASRP	BOLTS (No.- Dia) SSRP	BOLTS (No.- Dia) ASRP	RIVETS ANGLE TO BAND SSRP	RIVETS ANGLE TO BAND ASRP	SPOT WELDS ANGLE TO BAND SSRP
ANNULAR	2⅔" × ½" * REROLLED END	24"-36"	12"	0.064"-0.109"	0.060"-0.105"	0.052"	0.060"	0.079"	½"	⅞"	32 ksi	2" × 2" × 3/16"	2" × 2" × 3/16"	3-½"	3-½"	3-⅜"	3-⅜"	5-½"
		42"-60"	12"	0.064"-0.109"	0.075"-0.105"	0.052"	0.105"	0.079"	½"	⅞"	32 ksi	2" × 2" × 3/16"	2" × 2" × 3/16"	3-½"	3-½"	3-⅜"	3-⅜"	5-½"
		66"-72"	12"	0.064"-0.109"		0.052"		0.079"	½"	⅞"	32 ksi	2" × 2" × 3/16"	2" × 2" × 3/16"	3-½"	3-½"	3-⅜"	3-⅜"	5-½"
		78"-114"	12"	0.079"-0.109"		0.079"		0.109"	½"	⅞"	45 ksi	2" × 2" × 3/16"	2" × 2" × 3/16"	3-½"	3-½"	3-⅜"	3-⅜"	5-½"
HUGGER	2⅔" × ½" * REROLLED END	24"-72"	10½"	0.064"-0.109"		0.052"		0.079"	½"	⅞"	32 ksi							
		78"-84"	10½"	0.109"		0.079"		0.109"	½"	⅞"	45 ksi							

* See Note 14.

NOTES:

To accompany plans dated February 16, 2010

1. All ferrous metal coupling band connection hardware shall be galvanized or electro-plated in accordance with the Standard Specifications.
2. For helically corrugated coupling bands, the connection angles may be oriented parallel to the pipe axis, provided connecting holes are slotted lengthwise sufficiently to allow adjustment for the helix angle.
3. Tension strap may be connected to band with either spot welds or fillet welds that develop minimum required strength of strap.
4. Use 1¼" gage line dimension on attached angle leg for rivets and spot welds.
5. Band thickness shall not be less than:
   a. 3 standard thicknesses lighter than the thickness of the pipe for Corrugated Steel Pipe.
   b. 2 standard thicknesses lighter than the thickness of the pipe and in no case lighter than 0.060" for Corrugated Aluminum Pipe.
6. Dimensions, thicknesses and strengths shown are minimum.
7. For pipe arches use same width band as for round pipe of equal periphery.
8. Fillet welds of equivalent strenght may be substituted for spot welds or rivets.
9. Spot welds shall develop minimum required strength of strap.
10. Pipe with rerolled ends having at least two 2⅔" × ½" annular corrugations at each end with or without an upturned flange may be connected with any of the annular coupling bands shown for pipe of the same diameter and wall thickness and having 2⅔" × ½" corrugations.
11. In the case of H-12 huggerbands, two piece bands are required for diameters through 96" and three piece bands are required for diameters 102" through 120".
12. Two piece bands are required for pipes greater than 42" diameter.
13. The 2¼" × 2" x 0.109" thick galvanized die-formed angle connector may be used in lieu of the 2" × 2" × 3/16" angle connector for standard joints only on pipes through 72" diameter.
14. All profiles of Spiral Rib Pipe (¾" × ¾" ribs at 7½" pitch and ¾" × 1" ribs at 11½" pitch in both steel and aluminum and ¾" × 1" ribs at 8½" pitch in steel only) shall be manufactured with rerolled ends. Corrugation profile of the rerolled ends shall be 2⅔" × ½" annual corrugations with a minimum of two full corrugations at each end.

STATE OF CALIFORNIA
DEPARTMENT OF TRANSPORTATION

CORRUGATED METAL PIPE COUPLING DETAILS No. 5 STANDARD JOINT

NO SCALE

RSP D97E DATED JUNE 6, 2008 SUPERSEDES STANDARD PLAN D97E
DATED MAY 1, 2006 - PAGE 187 OF THE STANDARD PLANS BOOK DATED MAY 2006.

REVISED STANDARD PLAN RSP D97E

2006 REVISED STANDARD PLAN RSP D97E

4-2-08

DIST	COUNTY	ROUTE	POST MILES TOTAL PROJECT	SHEET NO.	TOTAL SHEETS
08	SBd	62	7.6/8.5	28	32

Raymond Don Tsztoo
REGISTERED CIVIL ENGINEER

June 6, 2008
PLANS APPROVAL DATE

REGISTERED PROFESSIONAL ENGINEER — Raymond Don Tsztoo — No. C37332 — Exp. 6-30-08 — CIVIL — STATE OF CALIFORNIA

The State of California or its officers or agents shall not be responsible for the accuracy or completeness of electronic copies of this plan sheet.

To accompany plans dated February 16, 2010

ANNULAR AND HELICAL PROFILE

COUPLING TYPE	PIPE CORRUGATION	PIPE SIZE	W OR A	PIPE WALL THICKNESS		BAND THICKNESS		BAR AND STRAP (CSP ONLY)				ANGLE						
												DIMENSIONS		BOLTS (No. - Dia)		RIVETS ANGLE TO BAND		SPOT WELDS ANGLE TO BAND
				CSP	CAP	CSP	CAP	STRAP THICKNESS	BOLTS Dia	BAR Dia	BAR YIELD STRENGTH	CSP	CAP	CSP	CAP	CSP	CAP	CSP
TWO PIECE INTEGRAL FLANGE	1½" × ¼"	6"-10"	7"	0.064"-0.079"	0.060"	0.064"	0.060"							2-⅜"	2-⅜"			
	2⅔" × ½"	12"-24"	12"		0.060"-0.105"		0.060"								3-½"			
UNIVERSAL	2⅔" × ½"	THROUGH 36"	12"	0.064"-0.138"	0.060"-0.135"	0.064"	0.060"	0.079"	½"	⅞"	32 ksi	2" × 2" × 3/16"	2" × 2" × 3/16"	3-½"	3-½"	3-⅜"	3-⅜"	5-½"
		42"-60"	16¼"	0.064"-0.168"	0.060"-0.164"	0.064"	0.060"	DOUBLE 0.079"	½"	⅞"	32 ksi	2" × 2" × ¼"	2" × 2" × ¼"	4-½"	4-½"	5-⅜"	5-⅜"	
ANNULAR	2⅔" × ½"	THROUGH 36"	12"	0.064"-0.138"	0.060"-0.135"	0.064"	0.060"					2" × 2" × 3/16"	2" × 2" × 3/16"	3-½"	3-½"	3-⅜"	3-⅜"	5-½"
		42"-60"	12"	0.064"-0.079"		0.064"						2" × 2" × 3/16"		3-½"		3-⅜"		5-½"
		42"-60"	12"	0.109"-0.168"	0.135"-0.164"	0.064"	0.075"					2" × 2" × ¼"	2" × 2" × ¼"	3-½"	3-½"	5-⅜"	5-⅜"	
		66"-72"	24"		0.164"		0.105"						2" × 2" × ¼"		5-½"		5-½"	
		66"-84"	24"	0.109"-0.168"		0.064"						2" × 2" × ¼"		5-½"		7-⅜"		
		42"-54"	12"		0.060"-0.105"		0.060"						2" × 2" × 3/16"		3-½"		3-⅜"	
	3" × 1"	48"-60"	14"	0.064"-0.079"		0.064"						2" × 2" × 3/16"		3-½"		3-⅜"		5-½"
		48"-60"	14"	0.109"		0.064"						2" × 2" × 3/16"		3-½"		5-⅜"		
		66"-120"	25"	0.064"-0.109"		0.064"						2" × 2" × 3/16"		5-½"		9-⅜"		
		42"-60"	14"		0.060"-0.105"		0.060"						2" × 2" × 3/16"		3-½"		5-⅜"	
		42"-60"	14"		0.135"		0.075"						2" × 2" × ¼"		3-½"		5-⅜"	
		66"-96"	25"		0.060"-0.135"		0.060"						2" × 2" × ¼"		5-½"		7-⅜"	
		96"-108"	25"		0.135"		0.075"						2" × 2" × ¼"		5-½"		7-⅜"	
HELICAL	2⅔" × ½"	THROUGH 36"	12"	0.064"-0.138"	0.060"-0.135"	0.064"	0.060"					2" × 2" × 3/16"	2" × 2" × 3/16"	3-½"	3-½"	3-⅜"	3-⅜"	5-½"
		42"-54"	12"		0.060"-0.105"		0.060"						2" × 2" × 3/16"		3-½"		3-⅜"	
		42"-60"	12"	0.064"-0.079"		0.064"						2" × 2" × 3/16"		3-½"		3-⅜"		5-½"
		42"-60"	12"	0.109"-0.168"	0.135"-0.164"	0.064"	0.075"					2" × 2" × ¼"	2" × 2" × ¼"	3-½"	3-½"	5-⅜"	5-⅜"	
		66'-84"	24"	0.109"-0.168"		0.064"						2" × 2" × ¼"		5-½"		7-⅜"		
		66"-72"	24"		0.164"		0.105"						2" × 2" × ¼"		5-½"		5-⅜"	
	3" × 1"	48"-60"	14"	0.064"-0.079"		0.064"						2" × 2" × 3/16"		3-½"		3-⅜"		5-½"
		48"-60"	14"	0.109"		0.064"						2" × 2" × 3/16"		3-½"		5-⅜"		
		66"-120"	25"	0.064"-0.109"		0.064"						2" × 2" × 3/16"		5-½"		9-⅜"		
		42"-60"	14"		0.060"-0.105"		0.060"						2" × 2" × 3/16"		3-½"		5-⅜"	
		42"-60"	14"		0.135"		0.075"						2" × 2" × ¼"		3-½"		5-⅜"	
		66"-96"	25"		0.060"-0.135"		0.060"						2" × 2" × ¼"		5-½"		7-⅜"	
		96"-108"	25"		0.135"		0.075"						2" × 2" × ¼"		5-½"		7-⅜"	
HUGGER	2⅔" × ½" REROLLED END	THROUGH 48"	10½"	0.109"		0.064"		0.079"	½"	⅞"	32 ksi							
		54"- 66"	10½"	0.109"		0.064"		DOUBLE 0.079"	½"	⅞"	32 ksi							
		THROUGH 54"	10½"	0.064"-0.079"		0.064"		0.079"	½"	⅞"	32 ksi							
		THROUGH 60"	10½"	0.138"		0.079"		DOUBLE 0.079"	½"	⅞"	32 ksi							
		66"-72"	10½"	0.138"		0.109"		DOUBLE 0.079"	½"	⅞"	32 ksi							
		THROUGH 72"	10½"	0.168"		0.109"		DOUBLE 0.109"	½"	⅞"	45 ksi							
	3" × 1" REROLLED END	48"-84"	10½"	0.109"		0.079"		DOUBLE 0.079"	½"	⅞"	32 ksi							
		48"-90"	10½"	0.064"-0.079"		0.064"		DOUBLE 0.079"	½"	⅞"	32 ksi							
		96"-102"	10½"	0.079"		0.079"		DOUBLE 0.079"	½"	⅞"	32 ksi							
		90"-120"	10½"	0.109"		0.109"		DOUBLE 0.109"	½"	⅞"	45 ksi							

SPIRAL RIB PROFILE

COUPLING TYPE	PIPE CORRUGATION	PIPE SIZE	W	PIPE WALL THICKNESS		BAND THICKNESS		BAR AND STRAP (SSRP ONLY)				ANGLE						
												DIMENSIONS		BOLTS (No.- Dia)		RIVETS ANGLE TO BAND		SPOT WELDS ANGLE TO BAND
				SSRP	ASRP	SSRP	ASRP	STRAP THICKNESS	BOLTS Dia	BAR Dia	BAR YIELD STRENGTH	SSRP	ASRP	SSRP	ASRP	SSRP	ASRP	SSRP
ANNULAR	2⅔" × ½" * REROLLED END	24"-36"	12"	0.064"-0.109"	0.060"-0.105"	0.064"	0.060"	0.079"	½"	⅞"	32 ksi	2" × 2" × 3/16"	2" × 2" × 3/16"	3-½"	3-½"	3-⅜"	3-⅜"	5-½"
		42"-60"	12"	0.064"-0.079"	0.075"-0.105"	0.064"	0.075"	0.079"	½"	⅞"	32 ksi	2" × 2" × 3/16"	2" × 2" × 3/16"	3-½"	3-½"	3-⅜"	3-⅜"	5-½"
		42"-60"	12"	0.109"		0.064"		0.079"	½"	⅞"	32 ksi	2" × 2" × ¼"		3-½"		5-⅜"		
		66"-84"	24"	0.109"		0.064"		0.079"	½"	⅞"	32 ksi	2" × 2" × ¼"		5-½"		7-⅜"		
HUGGER	2⅔" × ½" * REROLLED END	24"-54"	10½"	0.064"-0.079"		0.064"		0.079"	½"	⅞"	32 ksi							
		24"-48"	10½"	0.109"		0.064"		0.079"	½"	⅞"	32 ksi							
		54"-66"	10½"	0.109"		0.064"		Double 0.079"	½"	⅞"	32 ksi							

* See Note 13.

NOTES:

1. All ferrous metal coupling band connection hardware shall be galvanized or electro-plated in accordance with the Standard Specifications.
2. For helically corrugated coupling bands, the connection angles may be oriented parallel to the pipe axis, provided connecting holes are slotted lengthwise sufficiently to allow adjustment for the helix angle.
3. Tension strap may be connected to band with either spot welds or fillet welds that develop minimum required strength of strap.
4. Use 1¼" gage line dimension on attached angle leg for rivets and spot welds.
5. Band thickness shall not be less than:
   a. 3 standard thicknesses lighter than the thickness of the pipe for Corrugated Steel Pipe.
   b. 2 standard thicknesses lighter than the thickness of the pipe and in no case lighter than 0.060" for Corrugated Aluminum Pipe.
6. Dimensions, thicknesses and strengths shown are minimum.
7. For pipe arches use same width band as for round pipe of equal periphery.
8. Fillet welds of equivalent strength may be substituted for spot welds or rivets.
9. Spot welds shall develop minimum required strength of strap.
10. Pipe with rerolled ends having at least two 2⅔" × ½" annular corrugations at each end with or without an upturned flange may be connected with any of the annular coupling bands shown for pipe of the same diameter and wall thickness and having 2⅔" × ½" corrugations.
11. In the case of H-12 huggerbands, two piece bands are required for diameters through 96" and three piece bands are required for diameters 102" through 120".
12. Two piece bands are required for pipes greater than 42" diameter.
13. All profiles of Spiral Rib Pipe (¾" × ¾" ribs at 7½" pitch and ¾" × 1" ribs at 11½" pitch in both steel and aluminum and ¾" × 1" ribs at 8½" pitch in steel only) shall be manufactured with rerolled ends. Corrugation profile of the rerolled ends shall be 2⅔" × ½" annual corrugations with a minimum of two full corrugations at each end.

STATE OF CALIFORNIA
DEPARTMENT OF TRANSPORTATION

CORRUGATED METAL PIPE COUPLING DETAILS No. 6 POSITIVE JOINT

NO SCALE

RSP D97F DATED JUNE 6, 2008 SUPERSEDES STANDARD PLAN D97F
DATED MAY 1, 2006 - PAGE 188 OF THE STANDARD PLANS BOOK DATED MAY 2006.

REVISED STANDARD PLAN RSP D97F

2006 REVISED STANDARD PLAN RSP D97F

4-2-08

DIST	COUNTY	ROUTE	POST MILES TOTAL PROJECT	SHEET NO.	TOTAL SHEETS
08	SBd	62	7.6/8.5	29	32

Raymond Don Tsztoo
REGISTERED CIVIL ENGINEER

June 6, 2008
PLANS APPROVAL DATE

REGISTERED PROFESSIONAL ENGINEER
Raymond Don Tsztoo
No. C37332
Exp. 6-30-08
CIVIL
STATE OF CALIFORNIA

The State of California or its officers or agents shall not be responsible for the accuracy or completeness of electronic copies of this plan sheet.

To accompany plans dated February 16, 2010

ANNULAR AND HELICAL PROFILE

COUPLING TYPE	PIPE CORRUGATION	PIPE SIZE	W OR A	PIPE WALL THICKNESS		BAND THICKNESS		BAR AND STRAP (CSP ONLY)			ANGLE						
											DIMENSIONS		BOLTS (No.- Dia)		RIVETS ANGLE TO BAND		SPOT WELDS ANGLE TO BAND
				CSP	CAP	CSP	CAP	STRAP THICKNESS	BOLTS Dia	BAR Dia	CSP	CAP	CSP	CAP	CSP	CAP	CSP
TWO PIECE INTEGRAL FLANGE	1½′ × ¼"	6"	7"	0.064"-0.168"		0.052"							3-⅜"				
	1½′ × ¼"	8"-10"	7"	0.064"-0.168"	0.060"-0.164"	0.064"	0.060"						3-⅜"	3-⅜"			
ANNULAR	2⅔" × ½"	THROUGH 24"	12"	0.064"-0.168"	0.060"-0.164"	0.064"	0.060"				2" × 2" × 3/16"	2" × 2" × 3/16"	3-½"	3-½"	3-⅜"	3-⅜"	3-½"
HUGGER	2⅔" × ½" REROLLED END	THROUGH 24"	10½"	0.064"-0.168"		0.064"		0.079"	½"	⅞"							

SPIRAL RIB PROFILE

COUPLING TYPE	PIPE CORRUGATION	PIPE SIZE	W	PIPE WALL THICKNESS		BAND THICKNESS		BAR AND STRAP (SSRP ONLY)			ANGLE						
											DIMENSIONS		BOLTS (No.- Dia)		RIVETS ANGLE TO BAND		SPOT WELDS ANGLE TO BAND
				SSRP	ASRP	SSRP	ASRP	STRAP THICKNESS	BOLTS Dia	BAR Dia	SSRP	ASRP	SSRP	ASRP	SSRP	ASRP	SSRP
ANNULAR	2⅔" × ½" * REROLLED END	24"	12"	0.064"-0.168"	0.060"-0.164"	0.064"	0.060"				2" × 2" × 3/16"	2" × 2" × 3/16"	3-½"	3-½"	3-⅜"	3-⅜"	3-½"
HUGGER	2⅔" × ½" * REROLLED END	24"	10½"	0.064"-0.168"		0.064"		0.079"	½"	⅞"							

* See Note 12.

NOTES:

1. All ferrous metal coupling band connection hardware shall be galvanized or electro-plated in accordance with the Standard Specifications.
2. For helically corrugated coupling bands, the connection angles may be oriented parallel to the pipe axis, provided connecting holes are slotted lengthwise sufficiently to allow adjustment for the helix angle.
3. Tension strap may be connected to band with either spot welds or fillet welds that develop minimum required strength of strap.
4. Use 1¼" gage line dimension on attached angle leg for rivets and spot welds.
5. Band thickness shall not be less than:
   a. 3 standard thicknesses lighter than the thickness of the pipe for Corrugated Steel Pipe.
   b. 2 standard thicknesses lighter than the thickness of the pipe and in no case lighter than 0.060" for Corrugated Aluminum Pipe.
6. Dimensions, thicknesses and strengths shown are minimum.
7. For pipe arches use same width band as for round pipe of equal periphery.
8. Fillet welds of equivalent strenght may be substituted for spot welds or rivets.
9. Spot welds shall develop minimum required strength of strap.
10. Pipe with rerolled ends having at least two 2⅔" × ½" annular corrugations at each end with or without an upturned flange may be connected with any of the annular coupling bands shown for pipe of the same diameter and wall thickness and having 2⅔" × ½" corrugations.
11. For downdrain applications, two piece integral flange couplers shall have factory applied sleeve type rubber gaskets with a minimum length of 7" measured along the length of the pipe.
12. All profiles of Spiral Rib Pipe (¾" × ¾" ribs at 7½" pitch and ¾" × 1" ribs at 11½" pitch in both steel and aluminum and ¾" × 1" ribs at 8½" pitch in steel only) shall be manufactured with rerolled ends. Corrugation profile of the rerolled ends shall be 2⅔" × ½" annual corrugations with a minimum of two full corrugations at each end.

STATE OF CALIFORNIA
DEPARTMENT OF TRANSPORTATION

CORRUGATED METAL PIPE COUPLING DETAILS No. 7 DOWNDRAIN

NO SCALE

RSP D97G DATED JUNE 6, 2008 SUPERSEDES STANDARD PLAN D97G
DATED MAY 1, 2006 - PAGE 189 OF THE STANDARD PLANS BOOK DATED MAY 2006.

REVISED STANDARD PLAN RSP D97G

2006 REVISED STANDARD PLAN RSP D97G

4-4-08

DIST	COUNTY	ROUTE	POST MILES TOTAL PROJECT	SHEET NO.	TOTAL SHEETS
08	SBd	62	7.6/8.5	30	32

Randell D. Hiatt
REGISTERED CIVIL ENGINEER

June 6, 2008
PLANS APPROVAL DATE

Randell D. Hiatt
No. C50200
Exp. 6-30-09
CIVIL
REGISTERED PROFESSIONAL ENGINEER
STATE OF CALIFORNIA

The State of California or its officers or agents shall not be responsible for the accuracy or completeness of electronic copies of this plan sheet.

To accompany plans dated February 16, 2010

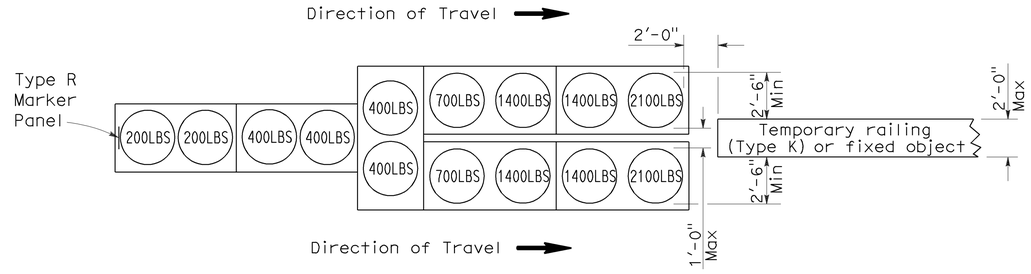

ARRAY 'TU14'

Approach speed 45 mph or more

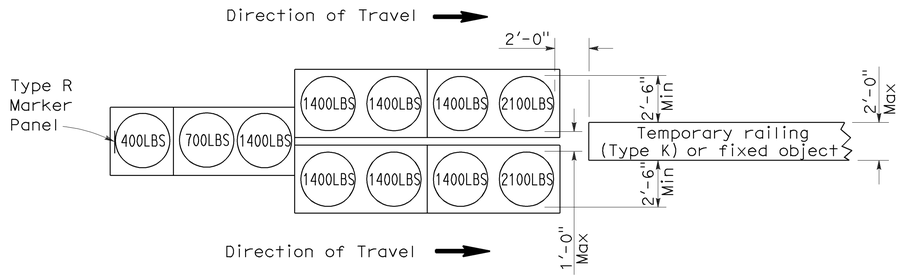

ARRAY 'TU11'

Approach speed less than 45 mph

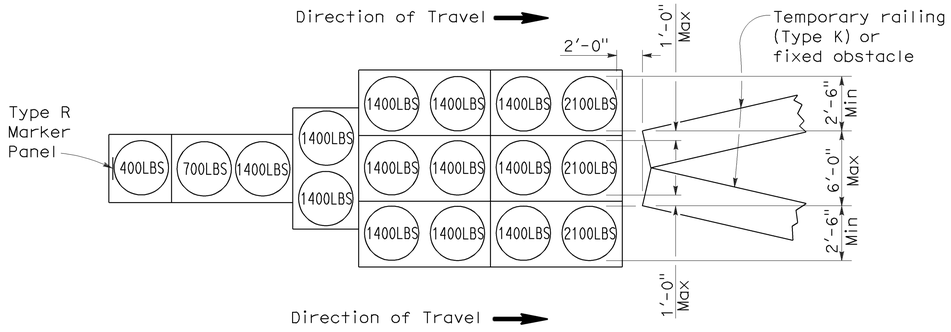

ARRAY 'TU17'

Approach speed less than 45 mph

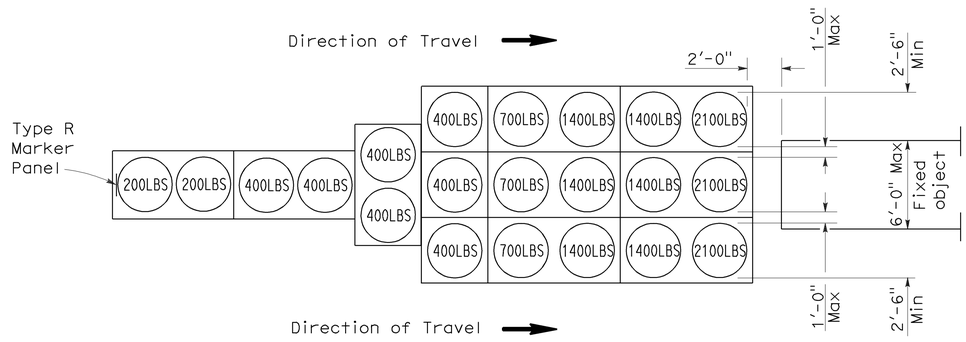

ARRAY 'TU21'

Approach speed 45 mph or more

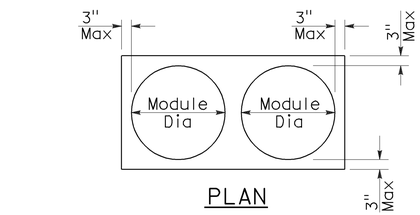

PLAN

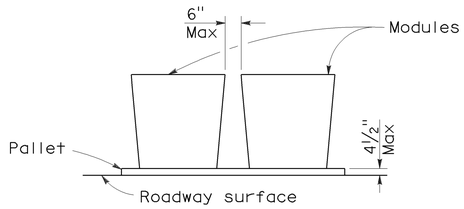

ELEVATION

CRASH CUSHION PALLET DETAIL

See Note 7

NOTES:

1. (XXX) Indicates sand filled module location and weight of sand in pounds for each module. Module spacing is based on the greater diameter of the module.
2. All sand weights are nominal.
3. Temporary crash cushion arrays shall not encroach on the traveled way.
4. Place the top of Type R marker panel 1" below the module lid.
5. Refer to Standard Plan A73B for marker details.
6. Approach speeds indicated conform to NCHRP 350 Report criteria.
7. Use of pallets is optional.

STATE OF CALIFORNIA
DEPARTMENT OF TRANSPORTATION

TEMPORARY CRASH CUSHION, SAND FILLED (UNIDIRECTIONAL)

NO SCALE

RSP T1A DATED JUNE 6, 2008 SUPERSEDES STANDARD PLAN T1A
DATED MAY 1, 2006 - PAGE 211 OF THE STANDARD PLANS BOOK DATED MAY 2006.

REVISED STANDARD PLAN RSP T1A

2006 REVISED STANDARD PLAN RSP T1A

5-15-08

DIST	COUNTY	ROUTE	POST MILES TOTAL PROJECT	SHEET NO.	TOTAL SHEETS
08	SBd	62	7.6/8.5	31	32

Randell D. Hiatt
REGISTERED CIVIL ENGINEER

June 6, 2008
PLANS APPROVAL DATE

REGISTERED PROFESSIONAL ENGINEER
Randell D. Hiatt
No. C50200
Exp. 6-30-09
CIVIL
STATE OF CALIFORNIA

The State of California or its officers or agents shall not be responsible for the accuracy or completeness of electronic copies of this plan sheet.

To accompany plans dated February 16, 2010

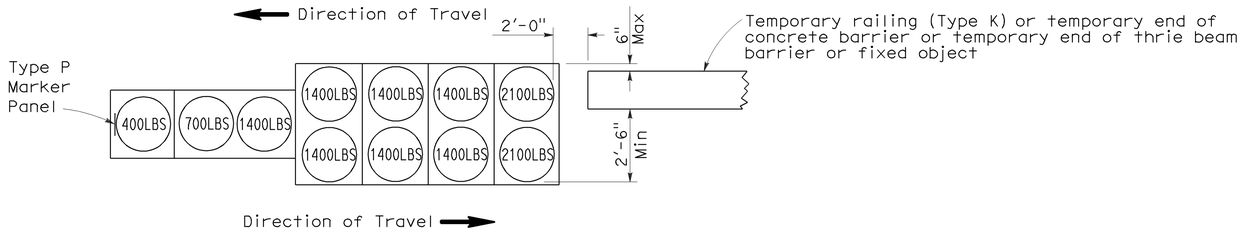

ARRAY 'TB11'

Approach speed less than 45 mph

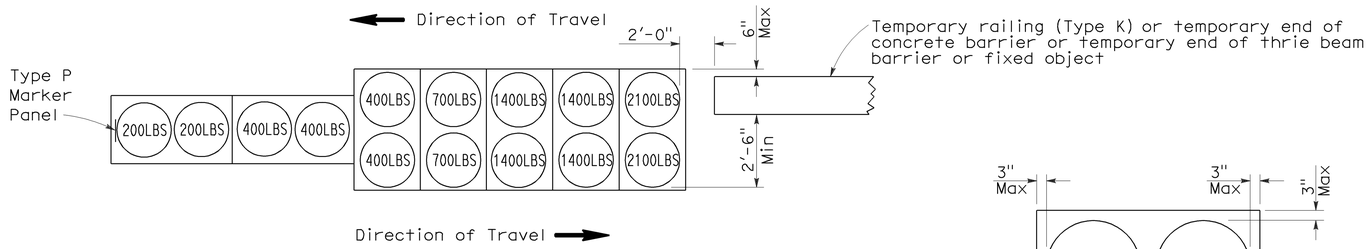

ARRAY 'TB14'

Approach speed 45 mph or more

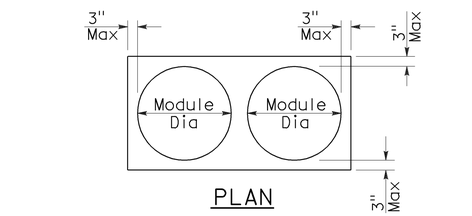

CRASH CUSHION PALLET DETAIL

See Note 7

NOTES:

1. (XXX) Indicates sand filled module location and weight of sand in pounds for each module. Module spacing is based on the greater diameter of the module.
2. All sand weights are nominal.
3. Temporary crash cushion arrays shall not encroach on the traveled way.
4. Place the Type P marker panel so that the bottom of the panel rests upon the pallet.
5. Refer to Standard Plan A73B for marker details.
6. Approach speeds indicated conform to NCHRP 350 Report criteria.
7. Use of pallets is optional.

STATE OF CALIFORNIA
DEPARTMENT OF TRANSPORTATION

TEMPORARY CRASH CUSHION, SAND FILLED (BIDIRECTIONAL)

NO SCALE

RSP T1B DATED JUNE 6, 2008 SUPERSEDES STANDARD PLAN T1B
DATED MAY 1, 2006 - PAGE 212 OF THE STANDARD PLANS BOOK DATED MAY 2006.

REVISED STANDARD PLAN RSP T1B

2006 REVISED STANDARD PLAN RSP T1B

5-15-08

DIST	COUNTY	ROUTE	POST MILES TOTAL PROJECT	SHEET NO.	TOTAL SHEETS
08	SBd	62	7.6/8.5	32	32

Randell D. Hiatt
REGISTERED CIVIL ENGINEER

June 6, 2008
PLANS APPROVAL DATE

REGISTERED PROFESSIONAL ENGINEER
Randell D. Hiatt
No. C50200
Exp. 6-30-09
CIVIL
STATE OF CALIFORNIA

The State of California or its officers or agents shall not be responsible for the accuracy or completeness of electronic copies of this plan sheet.

To accompany plans dated February 16, 2010

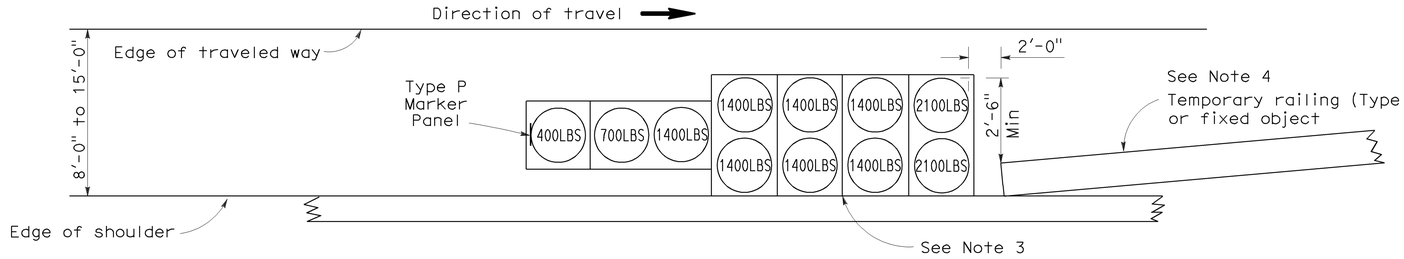

ARRAY 'TS11'

Approach speed less than 45 mph
See Note 9

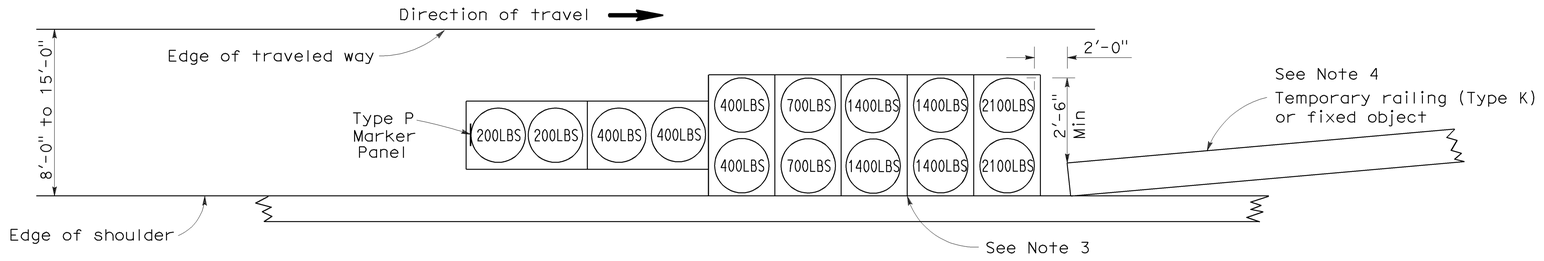

ARRAY 'TS14'

Approach speed 45 mph or more
See Note 9

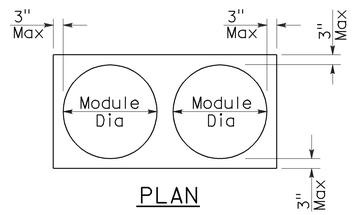

PLAN

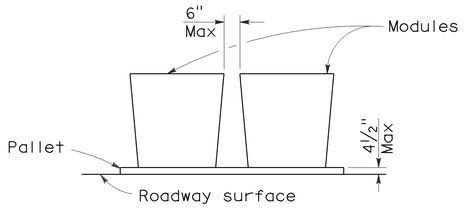

ELEVATION

CRASH CUSHION PALLET DETAIL

See Note 11

NOTES:

1. (XXX) Indicates sand filled module location and weight of sand in pounds for each module. Module spacing is based on the greater diameter of the module.
2. All sand weights are nominal.
3. The temporary crash cushion arrays shown on this plan shall be used only in locations where there will be traffic on one side of the temporary crash cushion array.
4. If the fixed object or approach end of the temporary railing is less than 15'-0" from the edge of traveled way, a temporary crash cushion is required in a construction or work zone.
5. Temporary crash cushion arrays shall not encroach on the traveled way.
6. Arrays for median shoulders shall conform to details shown on this plan for outside shoulders.
7. Place the Type P marker panel so that the bottom of the panel rests upon the pallet and faces traffic.
8. Refer to Standard Plan A73B for marker details.
9. For shoulder widths less than 8'-0", appropriate approved crash cushion protection, other than sand filled modules, shall be provided at fixed objects and at approach ends of temporary railing. The specific type of crash cushion shall be as shown on the project plans or as specified in the Special Provisions, or if not shown on the project plans or specified in the Special Provisions, shall be as approved by the Engineer.
10. Approach speeds indicated conform to NCHRP 350 Report criteria.
11. Use of pallets is optional.

STATE OF CALIFORNIA
DEPARTMENT OF TRANSPORTATION

TEMPORARY CRASH CUSHION, SAND FILLED (SHOULDER INSTALLATIONS)

NO SCALE

RSP T2 DATED JUNE 6, 2008 SUPERSEDES STANDARD PLAN T2
DATED MAY 1, 2006 - PAGE 213 OF THE STANDARD PLANS BOOK DATED MAY 2006.

REVISED STANDARD PLAN RSP T2

2006 REVISED STANDARD PLAN RSP T2

5-15-08