Dist	COUNTY	ROUTE	POST MILES TOTAL PROJECT	SHEET No.	TOTAL SHEETS
08	SBd	62	7.6/8.5	5	32

REGISTERED CIVIL ENGINEER 12-21-09 DATE

02-16-10
PLANS APPROVAL DATE

REGISTERED PROFESSIONAL ENGINEER HAISSAM YAHYA No. 56288 Exp. 12-31-10 CIVIL STATE OF CALIFORNIA

THE STATE OF CALIFORNIA OR ITS OFFICERS OR AGENTS SHALL NOT BE RESPONSIBLE FOR THE ACCURACY OR COMPLETENESS OF SCANNED COPIES OF THIS PLAN SHEET.

NOTE: FOR COMPLETE RIGHT OF WAY DATA, SEE RIGHT OF WAY RECORD MAPS AT DISTRICT OFFICE.

LEGEND:

X DRAINAGE SYSTEM No.

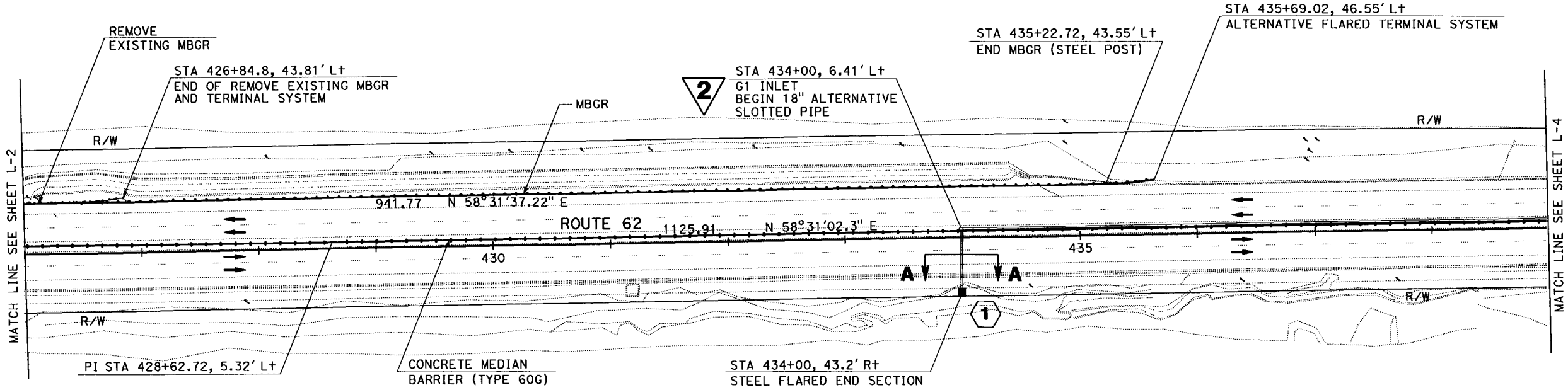

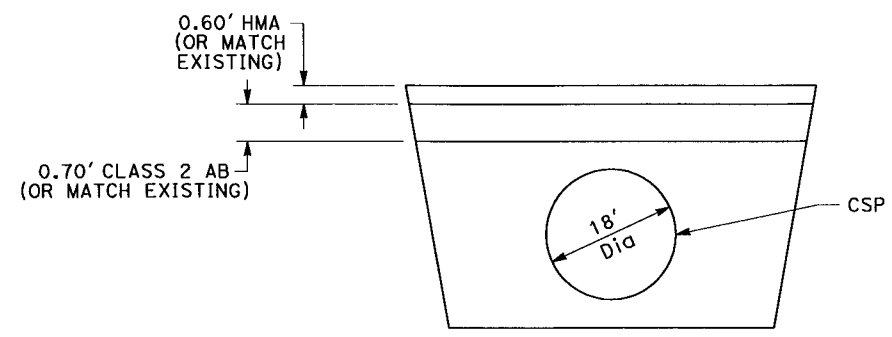

2 REVISED PER ADDENDUM No. 2 DATED APRIL 30, 2010

SECTION A-A
TYPICAL

LAYOUT

SCALE: 1" = 50'

L-3

STATE OF CALIFORNIA - DEPARTMENT OF TRANSPORTATION
Caltrans DESIGN DIVIDION

FUNCTIONAL SUPERVISOR: HAISSAM YAHYA
CALCULATED-DESIGNED BY: PARWAZ KHASRAW
CHECKED BY: HAISSAM YAHYA
REVISED BY
DATE REVISED

LAST REVISION 12-21-09
DATE PLOTTED => 27-APR-2010
TIME PLOTTED => 15:03

Dist	COUNTY	ROUTE	POST MILES TOTAL PROJECT	SHEET No.	TOTAL SHEETS
08	SBd	62	7.6/8.5	6	32

REGISTERED CIVIL ENGINEER 12-21-09 DATE

02-16-10
PLANS APPROVAL DATE

REGISTERED PROFESSIONAL ENGINEER HAISSAM YAHYA No. 56288 Exp. 12-31-10 CIVIL STATE OF CALIFORNIA

THE STATE OF CALIFORNIA OR ITS OFFICERS OR AGENTS SHALL NOT BE RESPONSIBLE FOR THE ACCURACY OR COMPLETENESS OF SCANNED COPIES OF THIS PLAN SHEET.

NOTE: FOR COMPLETE RIGHT OF WAY DATA, SEE RIGHT OF WAY RECORD MAPS AT DISTRICT OFFICE.

CURVE DATA

No.	R	△	T	L
1	3242.16	13°17′35″	377.80	752.21
2	3035.86	5°57′13″	157.87	315.46

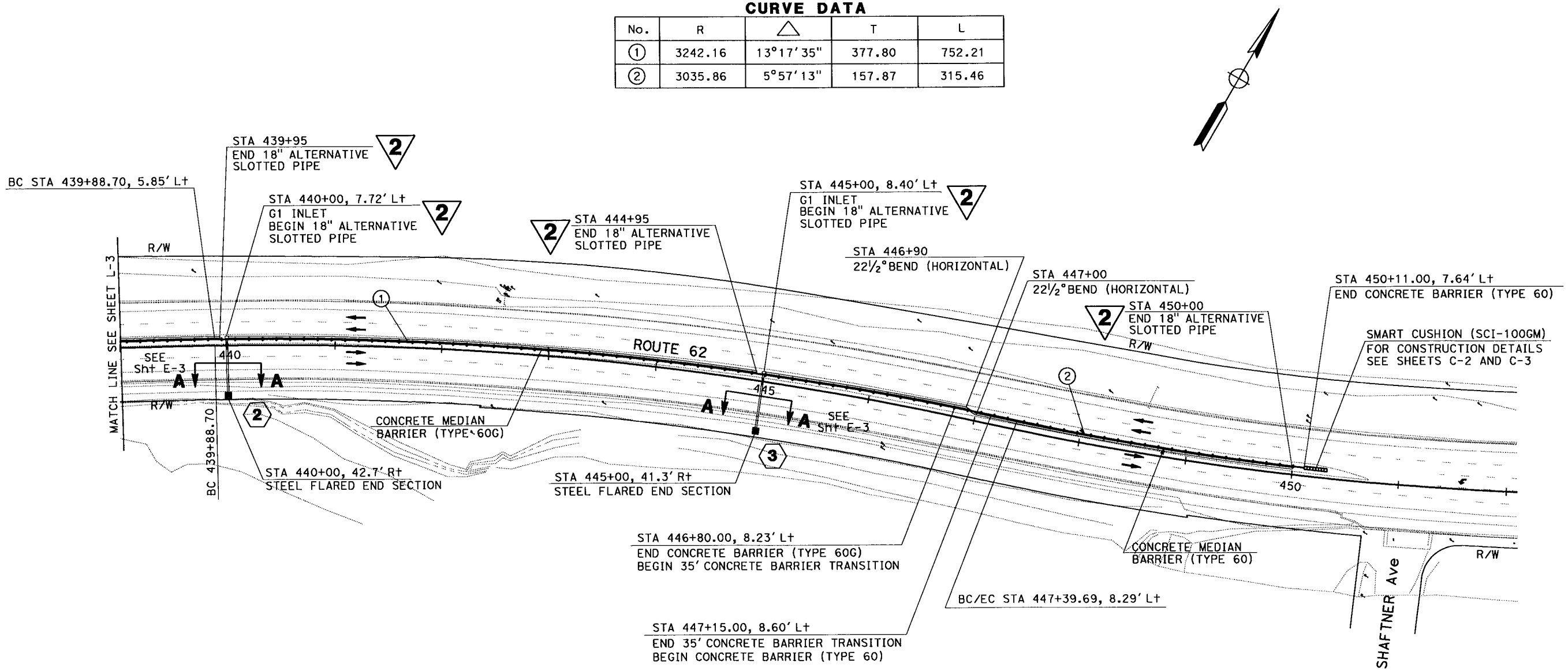

2 REVISED PER ADDENDUM No. 2 DATED APRIL 30, 2010

LAYOUT

SCALE: 1" = 50′

L-4

REVISED BY	DATE REVISED

CALCULATED-DESIGNED BY	CHECKED BY
PARWAZ KHASRAW	HAISSAM YAHYA

FUNCTIONAL SUPERVISOR: HAISSAM YAHYA

STATE OF CALIFORNIA - DEPARTMENT OF TRANSPORTATION
Caltrans DESIGN DIVIDION

LAST REVISION 12-21-09 | DATE PLOTTED => 27-APR-2010 | TIME PLOTTED => 15:03

Dist	COUNTY	ROUTE	POST MILES TOTAL PROJECT	SHEET No.	TOTAL SHEETS
08	SBd	62	7.6/8.5	22	32

REGISTERED CIVIL ENGINEER 12-21-09 DATE

02-16-10
PLANS APPROVAL DATE

REGISTERED PROFESSIONAL ENGINEER HAISSAM YAHYA No. 56288 Exp. 12-31-10 CIVIL STATE OF CALIFORNIA

THE STATE OF CALIFORNIA OR ITS OFFICERS OR AGENTS SHALL NOT BE RESPONSIBLE FOR THE ACCURACY OR COMPLETENESS OF SCANNED COPIES OF THIS PLAN SHEET.

NOTE:

1. EXACT LOCATIONS TO BE DETERMINED BY ENGINEER

CONCRETE MEDIAN BARRIER

STATION	TYPE 60G	TYPE 60	REMARKS
	LF		
403+61.00 TO 446+80.00	4319		*
446+80.00 To 447+15.00	35		TRANSITION *
447+15.00 To 450+11.00		296	*
TOTAL	4354	296	

* BARRIER MARKERS REQUIRED

CRASH CUSHION

ITEM	QUANTITY
	EA
SMART CUSHION, (SCI-100GM)	2

METAL BEAM GUARD RAILING

LOCATION	MGBR (STEEL POST)	ALTERNATIVE FLARED TERMINAL SYSTEM	REMOVE TERMINAL SYSTEM (N)	REMOVE EXISTING MBGR
	LF	EA	EA	LF
STA 425+84.42, 42.85' Lt TO STA 435+22.72, 43.55' Lt	942.00			
STA 425+84.42, 42.85' Lt TO STA 426+46.97, 43.81' Lt				63.00
STA 435+22.72, 43.55' Lt TO STA 435+69.02, 46.55' Lt		1		
STA 426+46.97, 43.81' Lt TO STA 426+84.03, 46.89' Lt			1	37.00
TOTAL	942.00	1	1	100

(N) - NOT A SEPARATE PAY ITEM; FOR INFORMATION ONLY

HOT MIX ASPHALT AND DRAINAGE QUANTITES

LOCATION	DRAINAGE SYSTEM No.	MINOR CONCERTE (MINOR STRUCTURE)	18" CORRUGATED STEEL PIPE (0.079" THICK)	2 18" ALTERNATIVE SLOTTED PIPE	18" STEEL FLARED END SECTION	HMA (TYPE A)	MISCELLANEOUS IRON AND STEEL	GRADE TYPE 24-9 (N)	CLASS2 AGGREGATE BASE
STATION		CY	LF	LF	EA	TON	LB	EA	CY
434+00.00	1	1.24	50		1	33	263	1	43
440+00.00	2	1.24	51		1	33	263	1	43
445+00.00	3	1.24	51		1	34	263	1	44
434+00.00 TO 450+00.00				1600		40			40
TOTAL		3.72	152	1600	3	140	789		130

(N) - NOT A SEPARATE PAY ITEM; FOR INFORMATION ONLY

RECONSTRUCT SURVEY MONUMENT

EA
10

2 REVISED PER ADDENDUM No. 2 DATED APRIL 30, 2010

SUMMARY OF QUANTITIES

Q-1

STATE OF CALIFORNIA - DEPARTMENT OF TRANSPORTATION
Caltrans DESIGN DIVIDION

FUNCTIONAL SUPERVISOR: HAISSAM YAHYA
CALCULATED-DESIGNED BY: PARWAZ KHASRAW
CHECKED BY: HAISSAM YAHYA
REVISED BY
DATE REVISED

LAST REVISION 12-21-09
DATE PLOTTED => 27-APR-2010
TIME PLOTTED => 15:03

DIST	COUNTY	ROUTE	POST MILES TOTAL PROJECT	SHEET NO.	TOTAL SHEETS
08	Sbd	62	7.6/8.5	29A	32

REGISTERED CIVIL ENGINEER

January 18, 2008
PLANS APPROVAL DATE

REGISTERED PROFESSIONAL ENGINEER Raymond Don Tsztoo No. C37332 Exp. 6-30-08 CIVIL STATE OF CALIFORNIA

The State of California or its officers or agents shall not be responsible for the accuracy or completeness of electronic copies of this plan sheet.

2

To accompany plans dated February 16, 2010

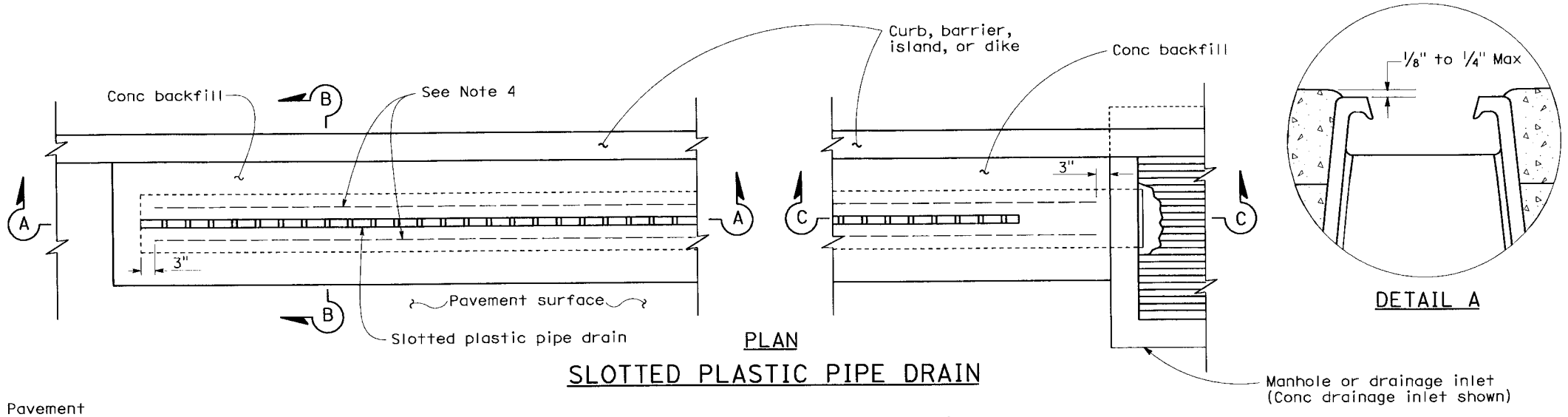

PLAN

DETAIL A

SLOTTED PLASTIC PIPE DRAIN

NOTES:

1. Plastic weld shall be factory fabricated.
2. When Heel Resistant Grate is to be used, see New Standard Plan NSP D98E for details.
3. Exterior wall stiffener ridges and details not shown on section views. See transition fitting detail for typical exterior ridges and throat stiffeners.
4. Lateral support, #4 bar, to be placed on both sides of slotted plastic pipe.

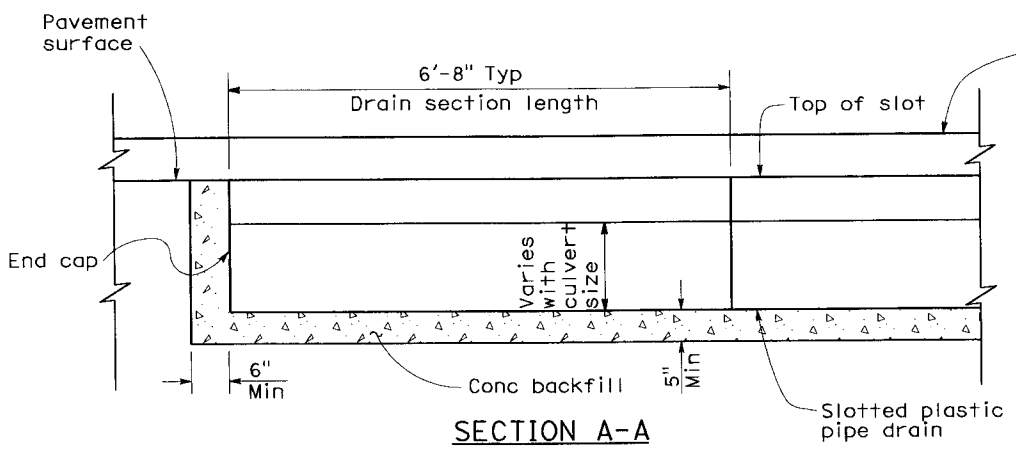

SECTION A-A

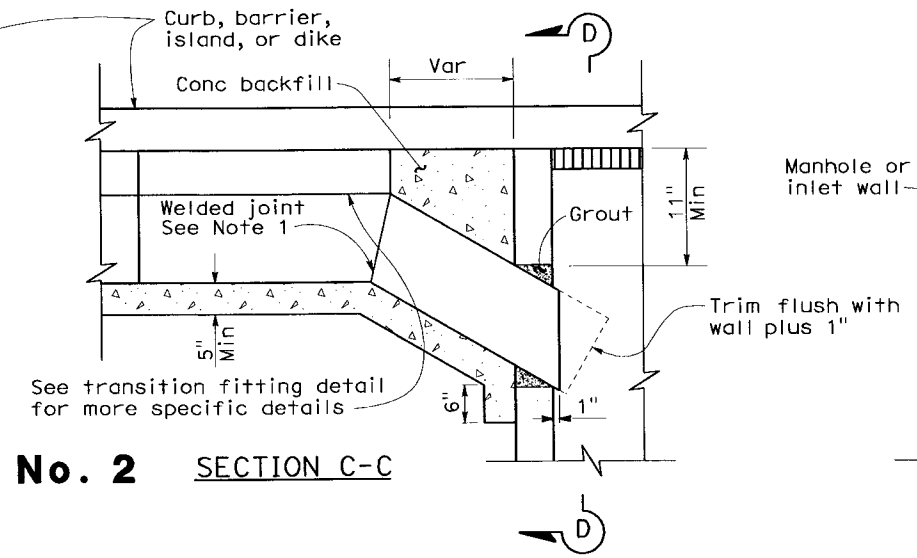

SECTION C-C

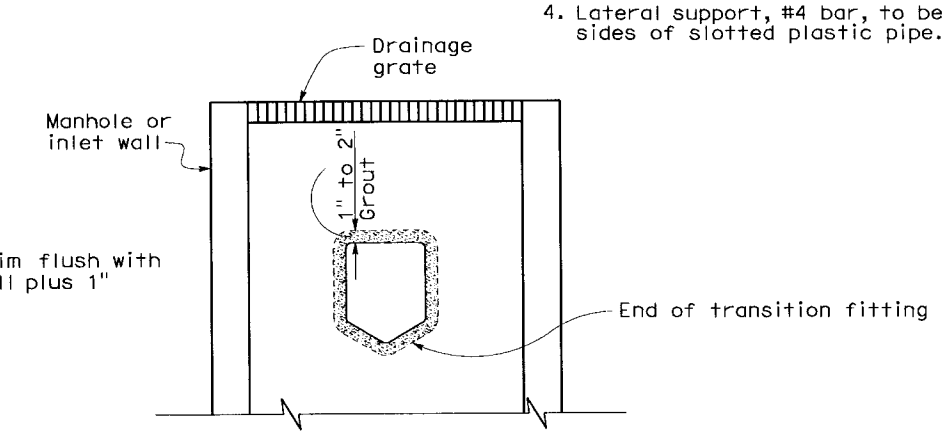

SECTION D-D

2 **ADDED PER ADDENDUM No. 2 DATED APRIL 30, 2010**

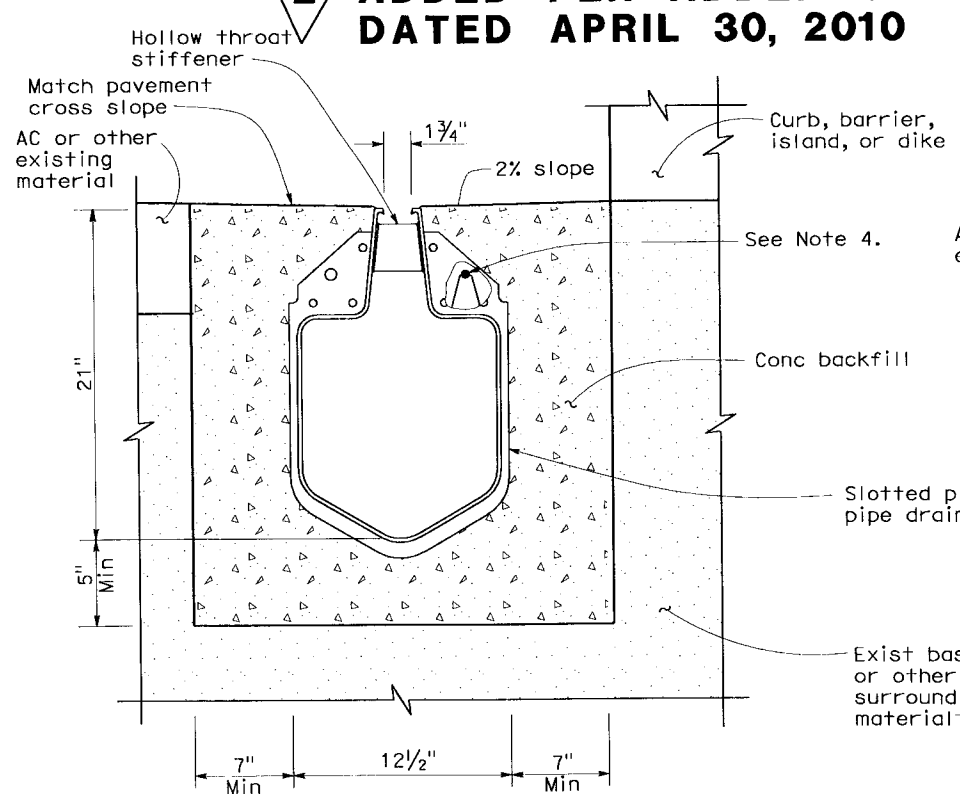

SECTION B-B
18" Slotted Plastic Pipe Drain

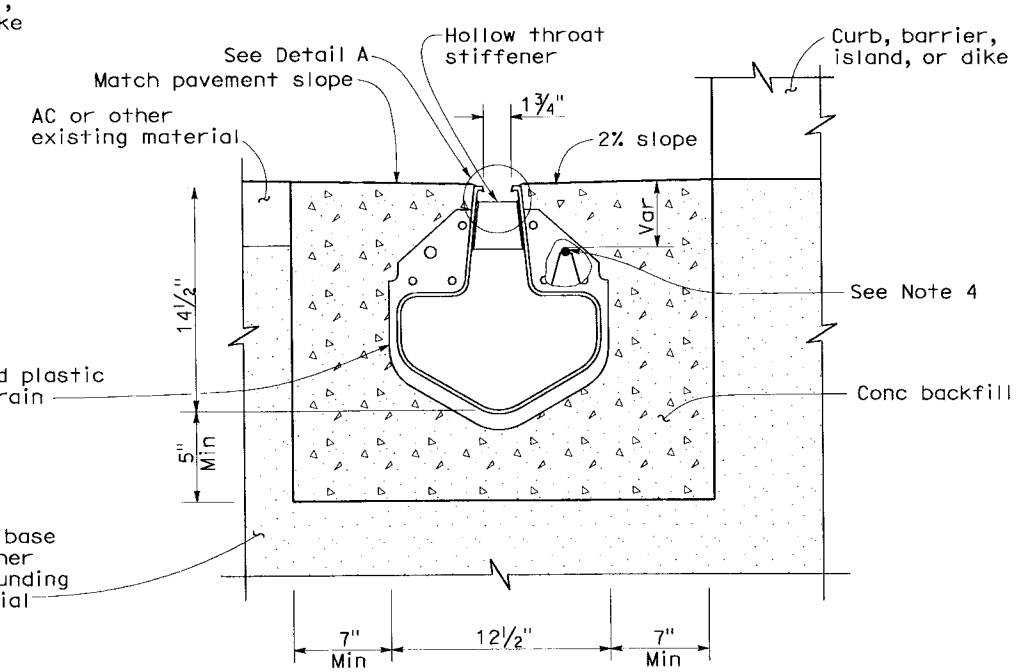

SECTION B-B
12" Slotted Plastic Pipe Drain

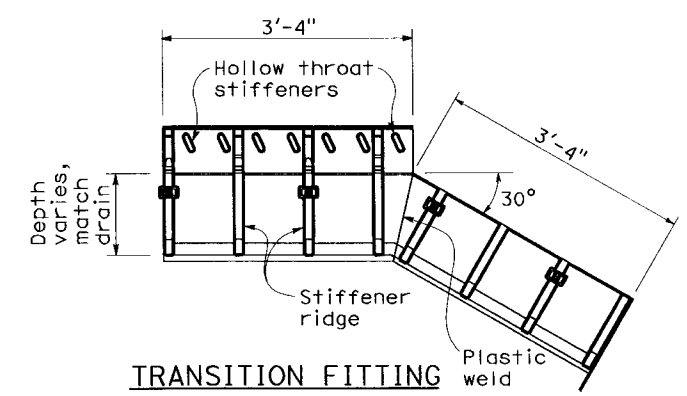

TRANSITION FITTING
with stiffeners and details shown

STATE OF CALIFORNIA
DEPARTMENT OF TRANSPORTATION

SLOTTED PLASTIC PIPE DRAIN DETAILS

NO SCALE

NSP D98D DATED JANUARY 18, 2008 SUPPLEMENTS THE STANDARD PLANS BOOK DATED MAY 2006.

NEW STANDARD PLAN NSP D98D

2006 NEW STANDARD PLAN NSP D98D

193A

11-5-07