Dist	COUNTY	ROUTE	POST MILES TOTAL PROJECT	SHEET No.	TOTAL SHEETS
08	Riv	10	94.7/99.0	1	19

STATE OF CALIFORNIA

DEPARTMENT OF TRANSPORTATION

ACBRIM-010-4(060)176E

PROJECT PLANS FOR CONSTRUCTION ON

STATE HIGHWAY

IN RIVERSIDE COUNTY
NEAR DESERT CENTER AT VARIOUS LOCATIONS
FROM 5.2 MILES EAST OF HAYFIELD ROAD
TO 3.0 MILES WEST OF EAGLE MOUNTAIN ROAD

TO BE SUPPLEMENTED BY STANDARD PLANS DATED MAY 2006

INDEX OF PLANS

SHEET No.	DESCRIPTION
1	TITLE AND LOCATION MAP
2	TYPICAL CROSS SECTIONS
3-6	CONSTRUCTION DETAILS
7	CONSTRUCTION AREA SIGNS
8	PAVEMENT DELINEATION QUANTITIES
9	SUMMARY OF QUANTITIES
10-14	REVISED STANDARD PLANS

STRUCTURE PLANS

15-19	ROUTE 10 BRIDGES

THE STANDARD PLANS LIST APPLICABLE TO THIS CONTRACT IS INCLUDED IN THE NOTICE TO BIDDERS AND SPECIAL PROVISIONS BOOK.

LOCATION MAP

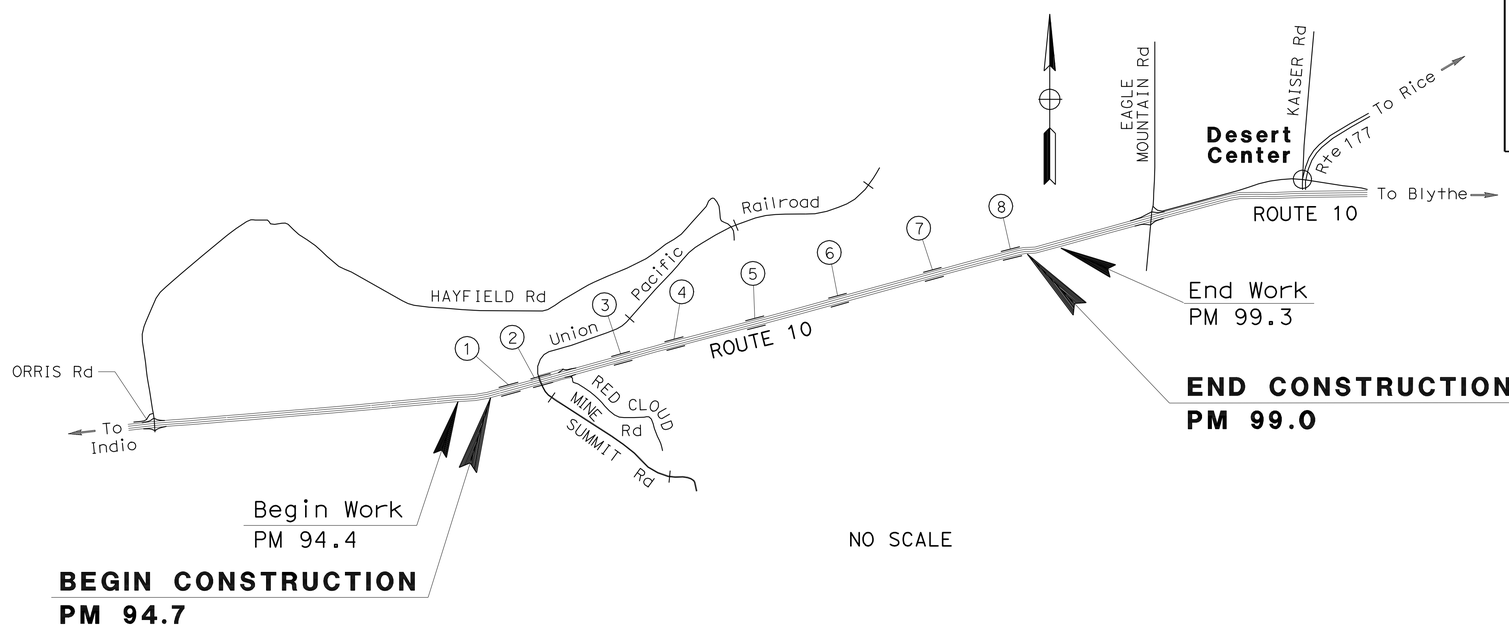

NO SCALE

LOCATIONS OF CONSTRUCTION

Loc No.	COUNTY	ROUTE	PM	STRUCTURE NAME	STRUCTURE NUMBER
1	Riv	10	94.7	TECKA DITCH	56-0118 L/R
2	Riv	10	95.0	EAGLE MOUNTAIN OH	56-0263 L/R
3	Riv	10	96.5	IROLO DITCH	56-0113 L/R
4	Riv	10	96.8	AJAX DITCH	56-0112 L/R
5	Riv	10	97.3	SHANTY DITCH	56-0111 L/R
6	Riv	10	97.8	UNION DITCH	56-0109 L/R
7	Riv	10	98.8	BULA DITCH	56-0105 L/R
8	Riv	10	99.0	TARO DITCH	56-0104 L/R

PROJECT ENGINEER
REGISTERED CIVIL ENGINEER

DATE

November 2, 2009
PLANS APPROVAL DATE

REGISTERED PROFESSIONAL ENGINEER
KEVIN H. CHEN
No. 70017
Exp. 9/30/10
CIVIL
STATE OF CALIFORNIA

THE STATE OF CALIFORNIA OR ITS OFFICERS OR AGENTS SHALL NOT BE RESPONSIBLE FOR THE ACCURACY OR COMPLETENESS OF SCANNED COPIES OF THIS PLAN SHEET.

PROJECT MANAGER: STEVE CROUCH

DESIGN ENGINEER: KEVIN H. CHEN

THE CONTRACTOR SHALL POSSESS THE CLASS (OR CLASSES) OF LICENSE AS SPECIFIED IN THE "NOTICE TO BIDDERS."

CONTRACT No. 08-0K6814

LAST REVISION 08-10-09

DATE PLOTTED => 20-MAY-2010
TIME PLOTTED => 10:28

Dist	COUNTY	ROUTE	POST MILES TOTAL PROJECT	SHEET No.	TOTAL SHEETS
08	Riv	10	94.7/99.0	2	19

REGISTERED CIVIL ENGINEER DATE

11-2-09
PLANS APPROVAL DATE

REGISTERED PROFESSIONAL ENGINEER KEVIN H. CHEN No. 70017 Exp. 9/30/10 CIVIL STATE OF CALIFORNIA

THE STATE OF CALIFORNIA OR ITS OFFICERS OR AGENTS SHALL NOT BE RESPONSIBLE FOR THE ACCURACY OR COMPLETENESS OF SCANNED COPIES OF THIS PLAN SHEET.

NOTES:

1. DIMENSIONS OF THE PAVEMENT STRUCTURE ARE SUBJECT TO TOLERANCES SPECIFIED IN THE STANDARD SPECIFICATIONS.
2. SUPERELEVATION AS SHOWN OR AS DIRECTED BY THE ENGINEER.
3. NO RUMBLE STRIP ON STRUCTURE DECKS.
4. FOR LOCATION, TYPE, AND REMOVE OF METAL BEAM GUARD RAILING SEE SHEET Q-1.
5. FOR LOCATION, TYPE, AND REMOVE OF AC DIKE SEE SHEET Q-1.
6. SEE SHEET C-1 AND C-2 FOR LIMITS OF CONSTRUCTION.

DESIGN DESIGNATION

2009 ADT = 25,600 D = 39.6%
2009 DHV = 2,800 T = 19.5%
2019 ADT = 32,000 D = 39.8%
2019 DHV = 3,000 T = 18.8%
2029 ADT = 40,000 D = 40.0%
2029 DHV = 3,250 T = 18.1%
$ESAL_{20}$ =71,990,555 TI_{20} =15.0

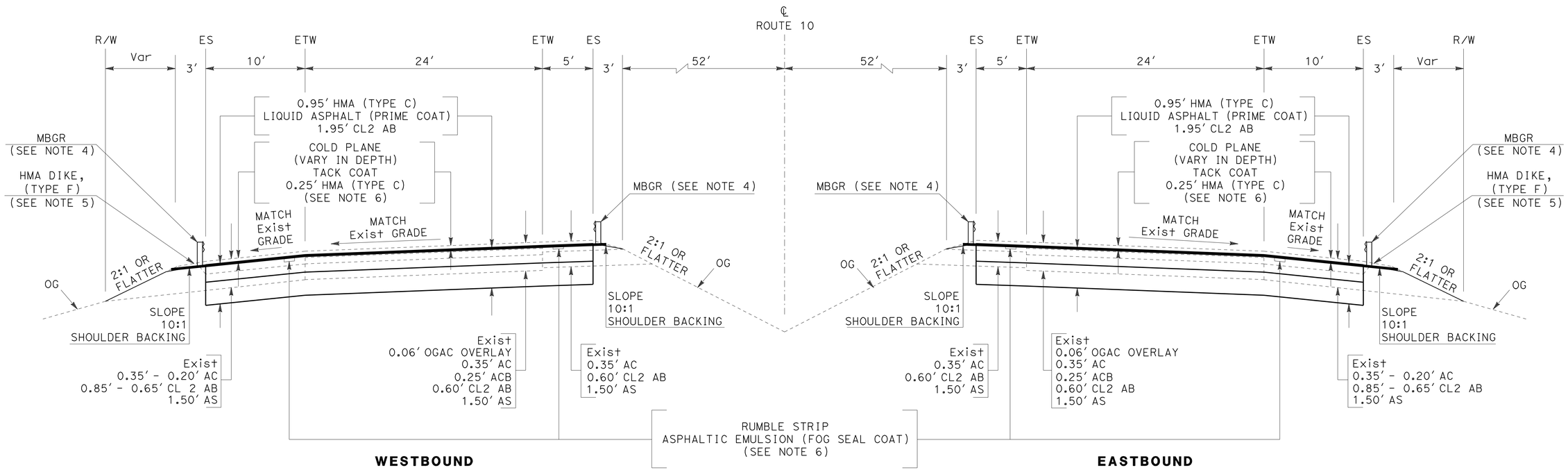

PM 94.7 TO PM 99.0

ROUTE 10

TYPICAL CROSS SECTIONS

NO SCALE

X-1

REVISED BY	DATE REVISED

CALCULATED-DESIGNED BY: KEVIN H. CHEN
CHECKED BY: KEVIN CHEN
FUNCTIONAL SUPERVISOR: KEVIN CHEN

STATE OF CALIFORNIA - DEPARTMENT OF TRANSPORTATION
Caltrans MAINTENANCE DESIGN

LAST REVISION 08-10-09 | DATE PLOTTED => 03-NOV-2009 | TIME PLOTTED => 09:29

Dist	COUNTY	ROUTE	POST MILES TOTAL PROJECT	SHEET No.	TOTAL SHEETS
08	Riv	10	94.7/99.0	3	19

REGISTERED CIVIL ENGINEER DATE

11-2-09
PLANS APPROVAL DATE

REGISTERED PROFESSIONAL ENGINEER KEVIN H. CHEN No. 70017 Exp. 9/30/10 CIVIL STATE OF CALIFORNIA

THE STATE OF CALIFORNIA OR ITS OFFICERS OR AGENTS SHALL NOT BE RESPONSIBLE FOR THE ACCURACY OR COMPLETENESS OF SCANNED COPIES OF THIS PLAN SHEET.

NOTES:

1. FOR LOCATION, TYPE, AND REMOVE OF METAL BEAM GUARD RAILING SEE SHEET Q-1.
2. FOR TYPE, AND REMOVE OF AC DIKE SEE SHEET Q-1.
3. EXISTING CMP PROTECT IN PLACE.

LEGEND:

- LIMITS OF WORK
- COLD PLANE AC PAVEMENT
- COLD PLANE AC PAVEMENT AND PLACE 0.25′ HOT MIX ASPHALT (TYPE C)
- ROADWAY EXCAVATION AND 0.95′ HMA (TYPE C) OVER 1.95′ CL2 AB
- INSTALL RUMBLE STRIP (AC GROUND-IN INDENTATIONS) AND ASPHALTIC EMULSION (FOG SEAL COAT) SHOULDER
- MBGR & DIKE LIMITS OF WORK
- INSTALL MBGR

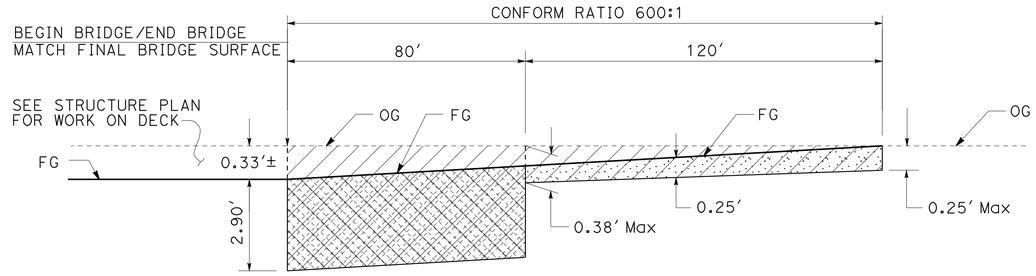

CONFORM DETAIL
(TRANSVERSE)
(TYPICAL)

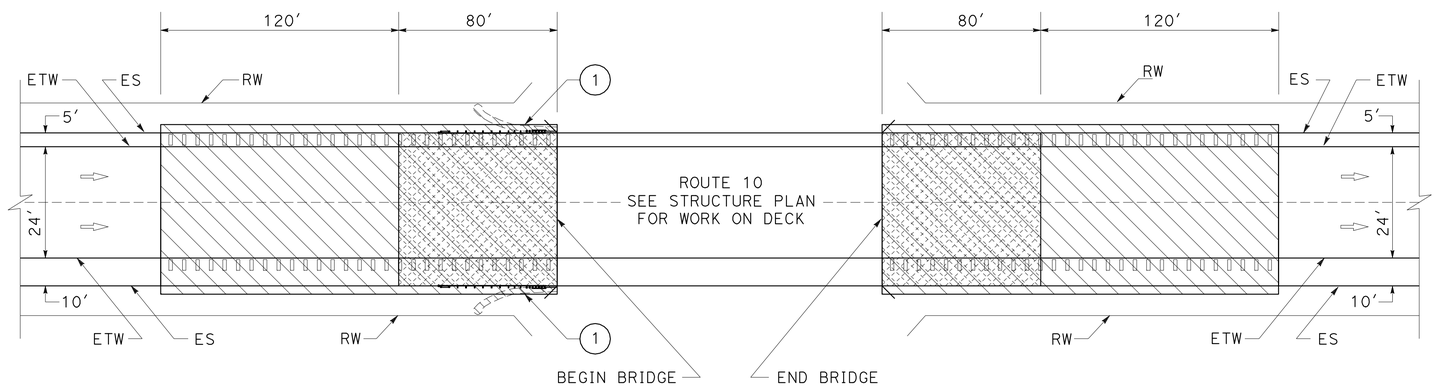

LIMITS OF WORK
(TYPICAL)

CONSTRUCTION DETAILS
NO SCALE

C-1

REVISED BY | DATE REVISED
KEVIN H. CHEN | KEVIN CHEN
CALCULATED-DESIGNED BY | CHECKED BY
FUNCTIONAL SUPERVISOR: KEVIN CHEN

STATE OF CALIFORNIA - DEPARTMENT OF TRANSPORTATION
Caltrans® MAINTENANCE DESIGN

LAST REVISION 08-10-09 | DATE PLOTTED => 03-NOV-2009 | TIME PLOTTED => 09:30

Dist	COUNTY	ROUTE	POST MILES TOTAL PROJECT	SHEET No.	TOTAL SHEETS
08	Riv	10	94.7/99.0	4	19

REGISTERED CIVIL ENGINEER DATE

11-2-09
PLANS APPROVAL DATE

REGISTERED PROFESSIONAL ENGINEER
KEVIN H. CHEN
No. 70017
Exp. 9/30/10
CIVIL
STATE OF CALIFORNIA

THE STATE OF CALIFORNIA OR ITS OFFICERS OR AGENTS SHALL NOT BE RESPONSIBLE FOR THE ACCURACY OR COMPLETENESS OF SCANNED COPIES OF THIS PLAN SHEET.

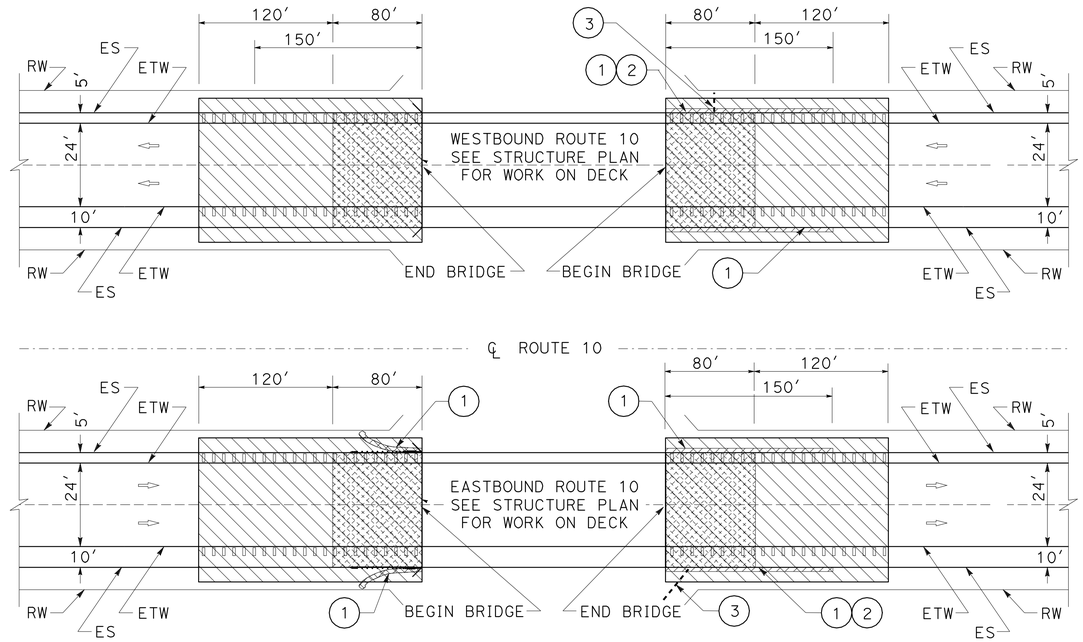

LIMITS OF WORK
(TECKA DITCH)

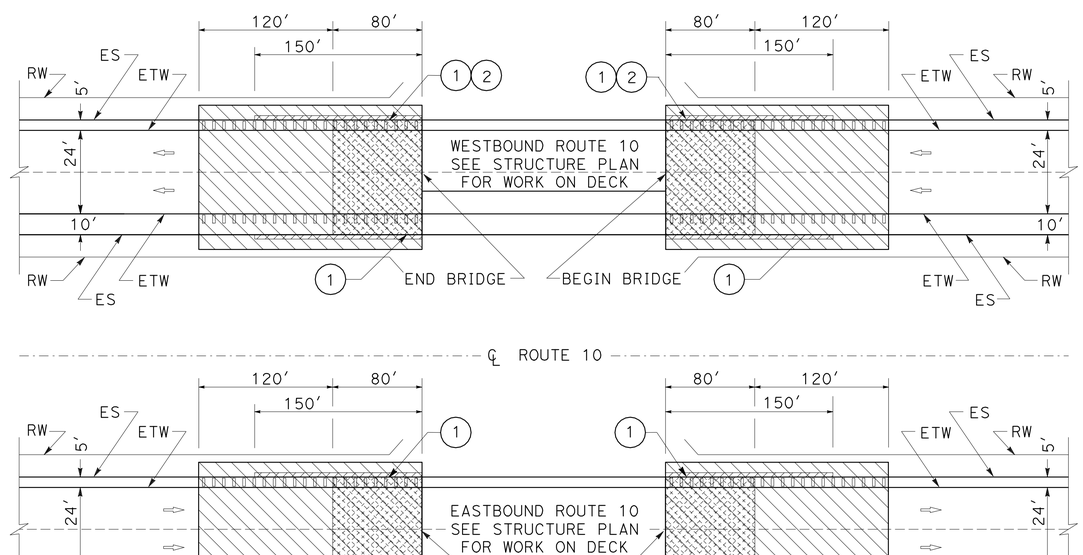

LIMITS OF WORK
(EAGLE MOUNTAIN OH)

CONSTRUCTION DETAILS
NO SCALE

C-2

STATE OF CALIFORNIA - DEPARTMENT OF TRANSPORTATION
Caltrans MAINTENANCE DESIGN

FUNCTIONAL SUPERVISOR: KEVIN CHEN
CALCULATED-DESIGNED BY: KEVIN H. CHEN
CHECKED BY: KEVIN CHEN
REVISED BY
DATE REVISED

LAST REVISION 08-10-09 | DATE PLOTTED => 03-NOV-2009 | TIME PLOTTED => 09:30

Dist	COUNTY	ROUTE	POST MILES TOTAL PROJECT	SHEET No.	TOTAL SHEETS
08	Riv	10	94.7/99.0	5	19

REGISTERED CIVIL ENGINEER DATE

11-2-09
PLANS APPROVAL DATE

REGISTERED PROFESSIONAL ENGINEER KEVIN H. CHEN No. 70017 Exp. 9/30/10 CIVIL STATE OF CALIFORNIA

THE STATE OF CALIFORNIA OR ITS OFFICERS OR AGENTS SHALL NOT BE RESPONSIBLE FOR THE ACCURACY OR COMPLETENESS OF SCANNED COPIES OF THIS PLAN SHEET.

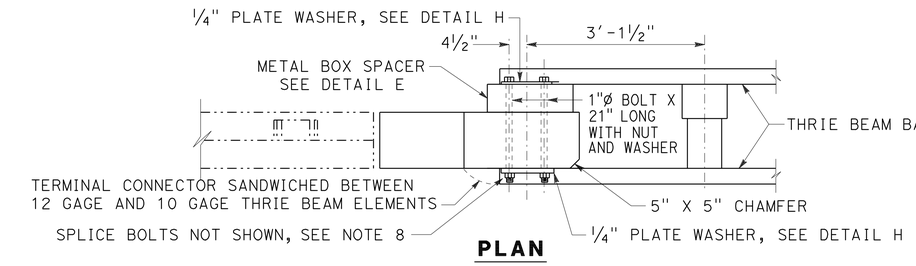

PLAN

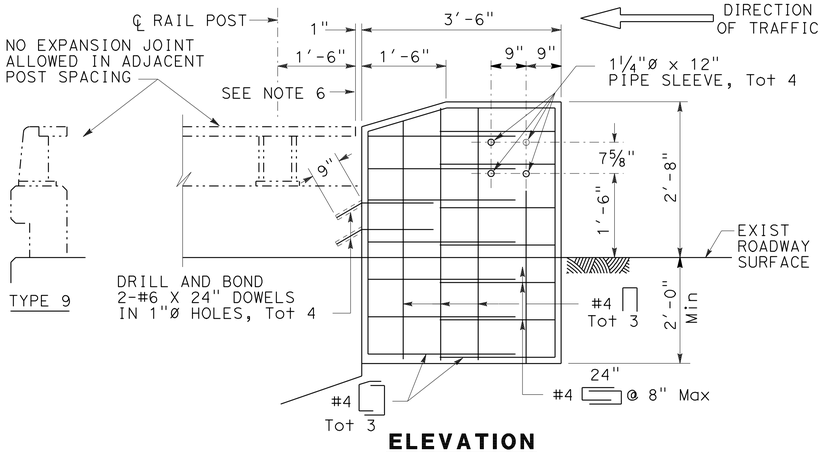

ELEVATION

EXISTING BARRIER RAILING TYPE 9 ALTERNATIVE 1

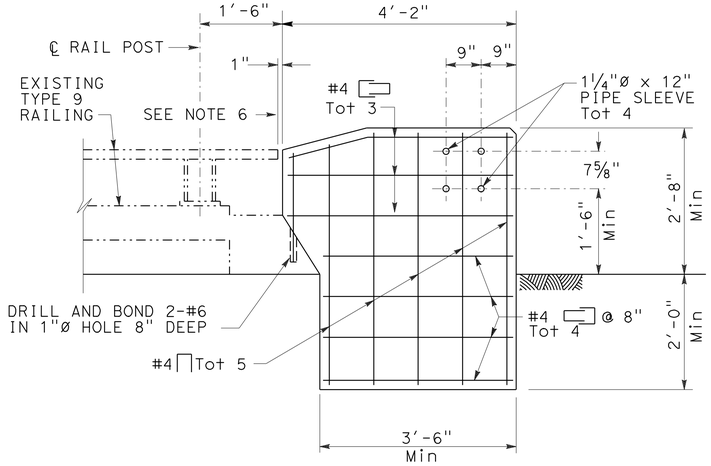

ELEVATION

EXISTING BARRIER RAILING TYPE 9 ALTERNATIVE 3

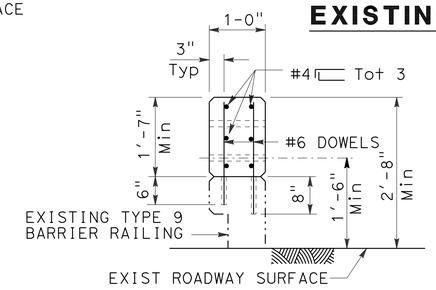

SECTION C-C

NOTES:

1. FOR DETAILS NOT SHOWN, SEE STANDARD PLANS.
2. DEPENDENT DIMENSIONS WILL BE VERIFIED IN THE FIELD BEFORE FABRICATING ANY END CONNECTION TO CONFORM WITH EXISTING PAVED CONDITIONS.
3. WHEN END SECTION IS CALLED FOR, MODIFY TYPICAL TERMINAL SECTION TO FIT. SEE DETAIL E, SHEET C-4.
4. FOR THRIE BEAM CONNECTION, SEE STANDARD PLANS "THRIE BEAM BARRIER CONNECTIONS TO BRIDGE RAILING".
5. ALL PLATES AND BOLTS ARE GALVANIZED.
6. CUT AND REMOVE THAT PORTION OF TYPE 9, 9-11 AND BAGR AS REQUIRED.
7. IF RAIL IS NOT CONTINUOUS OVER 2 POSTS, USE SPLICE AT EXPANSION JOINT.
8. EXTERIOR SPLICE BOLT HOLES SHALL BE THE STANDARD 7/8" x 1 1/8" SLOT SIZE FOR RAIL SPLICES AT POST # T4 AND THE CONNECTION TO THE CONCRETE BARRIER OR RAILING. INTERIOR SPLICE BOLT HOLES MAY BE INCREASED UP TO 1 1/8" Dia. WASHERS SHALL BE USED WITH SPLICE BOLTS ON BACK SIDE OF RAIL ELEMENT AT POST # T4 AND CONNECTION TO THE CONCRETE BARRIER OR RAILING.
10. TAPER THE TOP OF THE END OF THE BRIDGE RAILING AT 4:1 TO MATCH THE TOP ELEVATION OF THE THRIE BEAM RAIL ELEMENT.

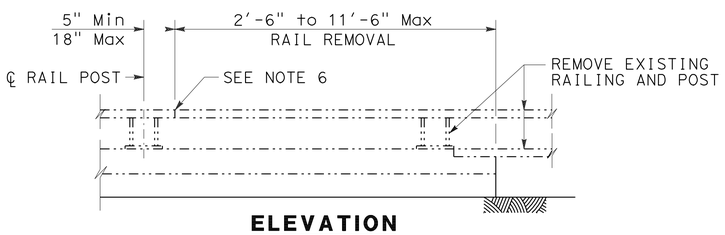

ELEVATION
RAIL REMOVAL

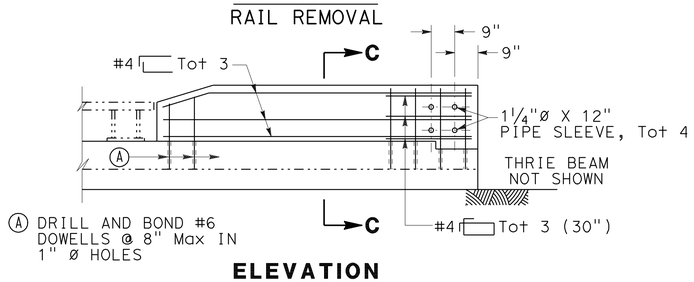

ELEVATION
NEW END POST

EXISTING BARRIER RAILING TYPE 9 ALTERNATIVE 2

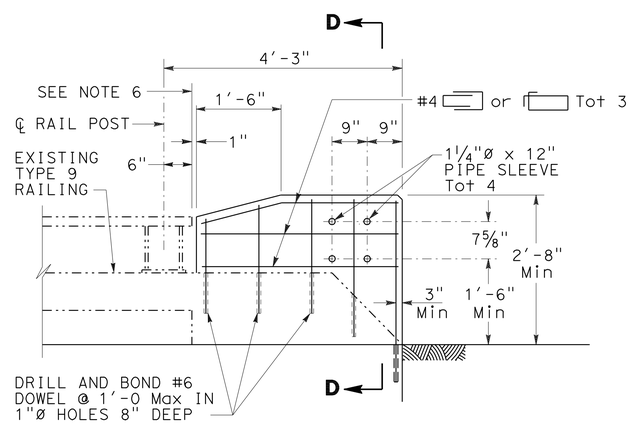

ELEVATION

EXISTING BARRIER RAILING TYPE 9 ALTERNATIVE 4

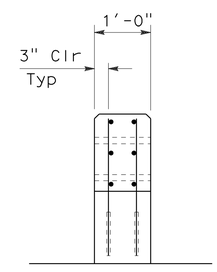

SECTION D-D

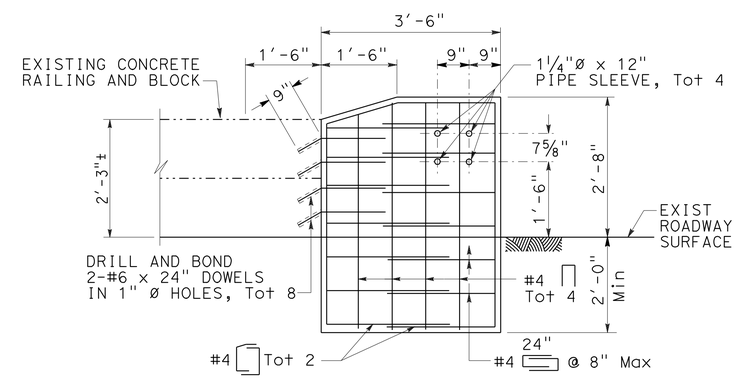

ELEVATION

EXISTING BARRIER RAILING TYPE 9 ALTERNATIVE 5

CONSTRUCTION DETAILS
(CONNECTION DETAILS)
(BARRIER RAILING TYPE 9 AND TYPE 9-11)

NO SCALE

C-3

STATE OF CALIFORNIA - DEPARTMENT OF TRANSPORTATION
Caltrans MAINTENANCE DESIGN

FUNCTIONAL SUPERVISOR: KEVIN CHEN
CALCULATED-DESIGNED BY: KEVIN H. CHEN
CHECKED BY: KEVIN CHEN
REVISED BY
DATE REVISED

LAST REVISION 08-10-09 | DATE PLOTTED => 03-NOV-2009 | TIME PLOTTED => 09:30

Dist	COUNTY	ROUTE	POST MILES TOTAL PROJECT	SHEET No.	TOTAL SHEETS
08	Riv	10	94.7/99.0	6	19

REGISTERED CIVIL ENGINEER DATE

11-2-09
PLANS APPROVAL DATE

REGISTERED PROFESSIONAL ENGINEER KEVIN H. CHEN No. 70017 Exp. 9/30/10 CIVIL STATE OF CALIFORNIA

THE STATE OF CALIFORNIA OR ITS OFFICERS OR AGENTS SHALL NOT BE RESPONSIBLE FOR THE ACCURACY OR COMPLETENESS OF SCANNED COPIES OF THIS PLAN SHEET.

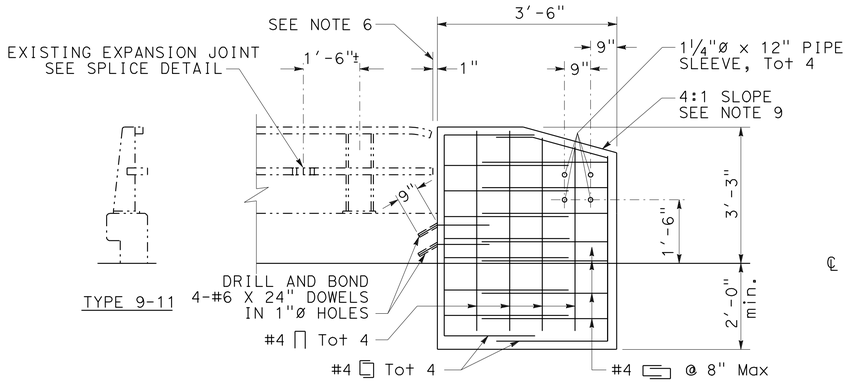

ELEVATION

EXISTING BARRIER RAILING TYPE 9-11
ALTERNATIVE 1

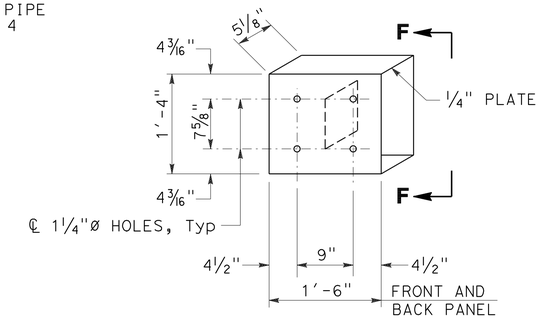

DETAIL E

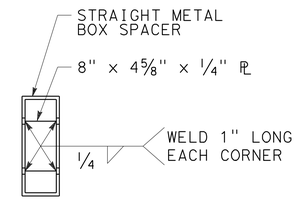

VIEW F-F

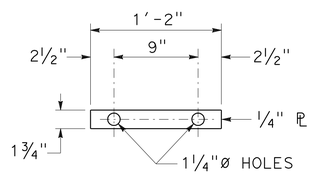

DETAIL H

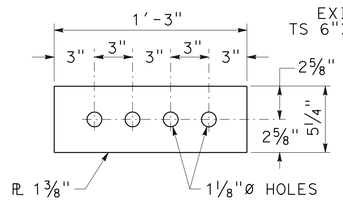

SPLICE PLATE

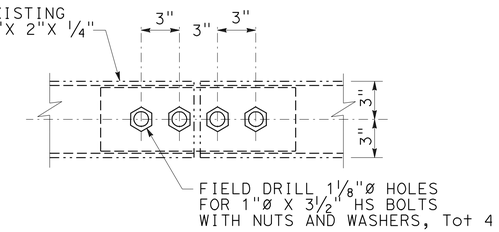

MODIFIED TUBE

RAIL SPLICE DETAIL
SEE NOTE 7

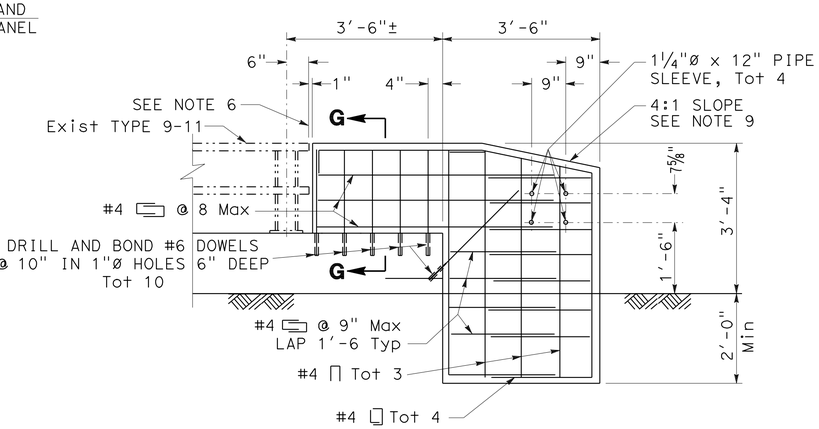

ELEVATION

EXISTING BARRIER RAILING TYPE 9-11
ALTERNATIVE 3

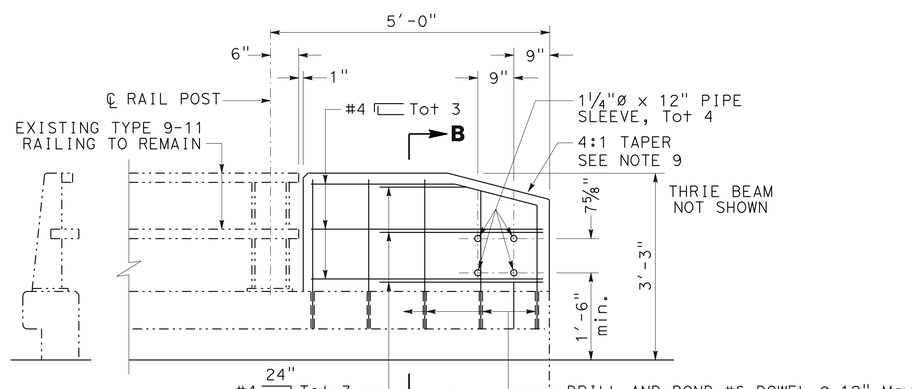

EXISTING BARRIER RAILING TYPE 9-11
ALTERNATIVE 2

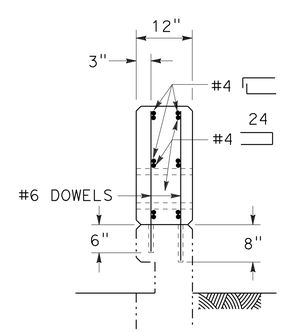

SECTION B-B

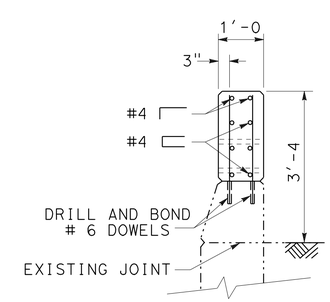

SECTION G-G

CONSTRUCTION DETAILS
(CONNECTION DETAILS)
(BARRIER RAILING TYPE 9 AND TYPE 9-11)

NO SCALE

C-4

STATE OF CALIFORNIA - DEPARTMENT OF TRANSPORTATION
Caltrans® MAINTENANCE DESIGN

FUNCTIONAL SUPERVISOR: KEVIN CHEN
CALCULATED-DESIGNED BY: KEVIN H. CHEN
CHECKED BY: KEVIN CHEN
REVISED BY
DATE REVISED

LAST REVISION 08-10-09 | DATE PLOTTED => 03-NOV-2009 | TIME PLOTTED => 09:30

Dist	COUNTY	ROUTE	POST MILES TOTAL PROJECT	SHEET No.	TOTAL SHEETS
08	Riv	10	94.7/99.0	7	19

W E Wasser
REGISTERED CIVIL ENGINEER DATE

11-2-09
PLANS APPROVAL DATE

REGISTERED PROFESSIONAL ENGINEER W.E. WASSER No. 37378 Exp 6/30/10 CIVIL STATE OF CALIFORNIA

THE STATE OF CALIFORNIA OR ITS OFFICERS OR AGENTS SHALL NOT BE RESPONSIBLE FOR THE ACCURACY OR COMPLETENESS OF SCANNED COPIES OF THIS PLAN SHEET.

NOTES:

1. LOCATIONS OF THE CONSTRUCTION AREA SIGNS ARE APPROXIMATE. THE EXACT LOCATIONS WILL BE DETERMINED BY THE FIELD ENGINEER.
2. CONSTRUCTION AREA SIGNS SHALL BE STATIONARY OR PORTABLE MOUNTED.
3. REFER TO Std PLANS T10 AND T14 FOR TRAFFIC CONTROL REQUIREMENTS.
4. REFER TO Std PLANS T15 AND T16 FOR TRAFFIC CONTROL SYSTEM FOR MOVING LANE CLOSURES.
5. MINIMUM SPACING BETWEEN TWO CONSECUTIVE SIGNS SHALL BE 500 FEET OR AS DETERMINED BY THE FIELD ENGINEER.
6. PORTABLE W8-7 "LOOSE GRAVEL" SHALL BE MOVED TO THE CURRENT WORK AREA AS NEEDED.

LEGEND

- CONSTRUCTION AREA SIGNS (1 POST)
- CONSTRUCTION AREA SIGNS (2 POSTS)
- CONSTRUCTION AREA SIGN (PORTABLE)
- ROAD WORK AREA
- (X-X) CONSTRUCTION AREA SIGN CODE
- PORTABLE CHANGEABLE MESSAGE SIGN (PCMS)

CONSTRUCTION AREA SIGNS

SIGN No.	SIGN CODE	PANEL SIZE	SIGN MESSAGE	No. OF POST(S) AND SIZE	No. OF SIGNS (N) (EA)
1-1	C40(CA)	144" x 60"	TRAFFIC FINES DOUBLED IN CONSTRUCTION ZONES	2 - 6" x 8"	2
1-2	G20-1	90" x 36"	ROAD WORK NEXT 6 MILES	2 - 4" x 6"	2
1-3	G20-2	48" x 24"	END ROAD WORK	2 - 4" x 6"	2
1-4	W8-7	48" x 48"	LOOSE GRAVEL	PORTABLE (*)	16
1-5	W20-1	48" x 48"	ROAD WORK AHEAD	2 - 4" x 6"	3

(N) - NOT A SEPARATE PAY ITEM; FOR INFORMATION ONLY.
(*) - REFER TO TYPICAL W8-7 SIGN PLACEMENT, SHOWN BELOW.

PORTABLE CHANGEABLE MESSAGE SIGN (PCMS)
(EA)
2

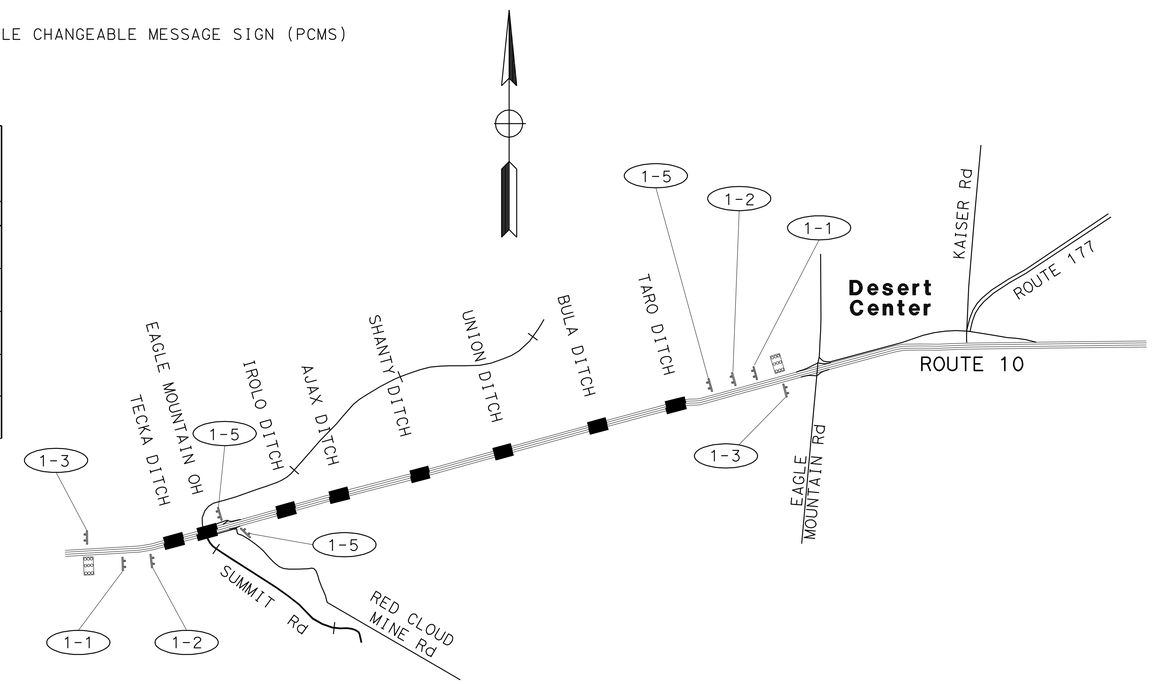

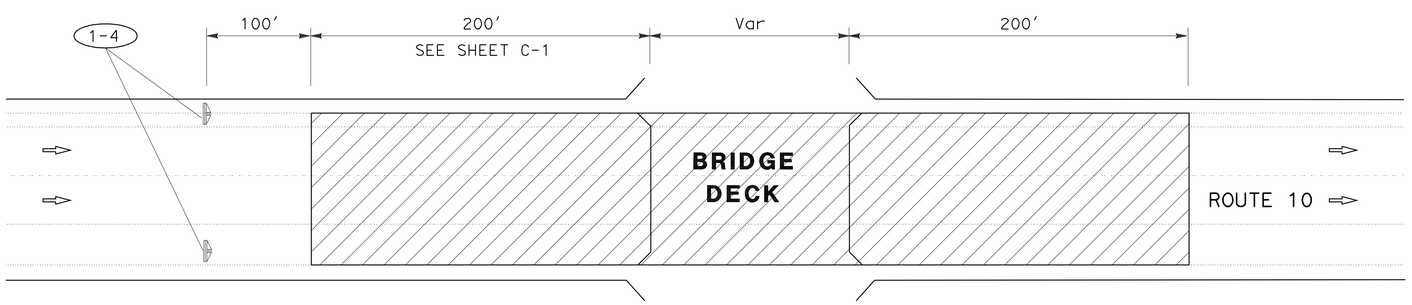

* TYPICAL W8-7 SIGN PLACEMENT ON ROUTE 10

PLACE PORTABLE W8-7 (AS SHOWN ABOVE) BEFORE EACH DITCH OR OH WORK LOCATION

THIS PLAN ACCURATE FOR CONSTRUCTION AREA SIGN WORK ONLY.

CONSTRUCTION AREA SIGNS

NO SCALE

CS-1

REVISED BY	DATE REVISED
P.B.	4/09

PATTI BARTOLI — SHABBIR AHMED — CALCULATED-DESIGNED BY — CHECKED BY

FUNCTIONAL SUPERVISOR: BILL WASSER

STATE OF CALIFORNIA - DEPARTMENT OF TRANSPORTATION
Caltrans TRAFFIC DESIGN A

LAST REVISION 08-10-09 | DATE PLOTTED => 03-NOV-2009 | TIME PLOTTED => 09:30

Dist	COUNTY	ROUTE	POST MILES TOTAL PROJECT	SHEET No.	TOTAL SHEETS
08	Riv	10	94.7/99.0	8	19

W E Wasser
REGISTERED CIVIL ENGINEER DATE

11-2-09
PLANS APPROVAL DATE

REGISTERED PROFESSIONAL ENGINEER W.E. WASSER No. 37378 Exp 6/30/10 CIVIL STATE OF CALIFORNIA

THE STATE OF CALIFORNIA OR ITS OFFICERS OR AGENTS SHALL NOT BE RESPONSIBLE FOR THE ACCURACY OR COMPLETENESS OF SCANNED COPIES OF THIS PLAN SHEET.

LEGEND

DIRECTION OF TRAFFIC

THERMOPLASTIC PAVEMENT MARKING

POST MILE LIMITS	DIRECTION	THERMOPLASTIC PAVEMENT MARKING		
		INSTALL	QUANTITY EA	Sq Ft
R95.0	WB/EB	AIRCRAFT MARKING @ 6.0 Sq Ft EACH	2	12.00
R95.0	WB/EB	'9'	2	6.26
		'5'	2	7.02
R99.0	WB/EB	AIRCRAFT MARKING @ 6.0 Sq Ft EACH	2	12.00
		TOTAL		37.28

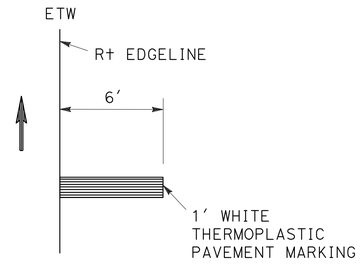

AIRCRAFT MARKING AT R99.0
(INSTALL ON WESTBOUND AND EASTBOUND SHOULDERS)

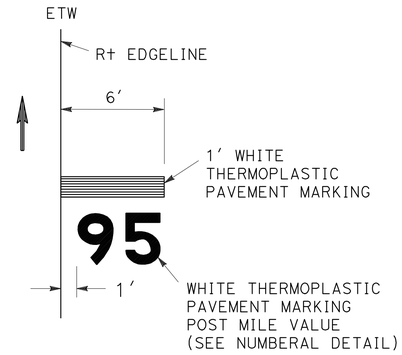

AIRCRAFT MARKING AT R95.0
(INSTALL ON WESTBOUND AND EASTBOUND SHOULDERS)

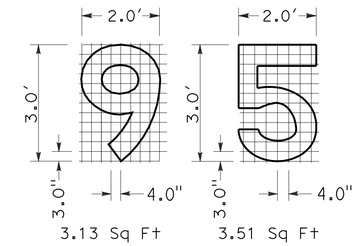

NUMBERAL DETAIL
POST MILE VALUE FOR AIRCRAFT MARKING

PAVEMENT DELINEATION QUANTITIES

POST MILE LIMITS	DIRECTION	DETAIL No.	REMOVE PAVEMENT MARKER (N)	PAVEMENT MARKER					THERMOPLASTIC TRAFFIC STRIPE (SPRAYABLE)		
				NON-REFLECTIVE	RETROREFLECTIVE						
				TYPE A	TYPE C	TYPE D	TYPE G	TYPE H	4" YLW	4" WHT	8" WHT
			EA	EA	EA				LF		
R94.7 TO R99.0	WB	13M	506	404			102			4,822	
	WB	25	102					102	4,822		
	WB	27B								4,822	
	RED CLOUD MINE WB EXIT RAMP	36	14				14				300
	RED CLOUD MINE WB ENTRANCE RAMP	8								150	
	EB	13M	506	404			102			4,822	
	EB	25	102					102	4,822		
	EB	27B								4,822	
	RED CLOUD MINE EB EXIT RAMP	36	14				14				300
	RED CLOUD MINE EB ENTRANCE RAMP	8								150	
		SUBTOTAL	1244	808			232	204	9,644	19,588	600
		TOTAL	1244	808	436				29,832		

(N) NOT A SEPARATE PAY ITEM, FOR INFORMATION ONLY.

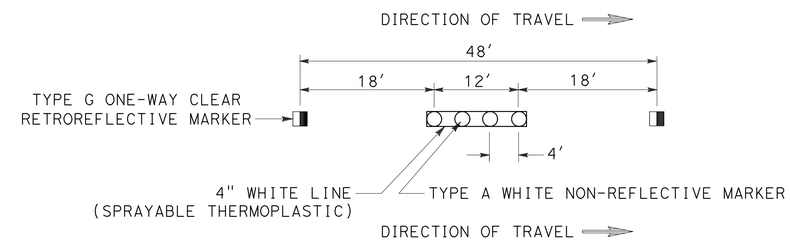

DETAIL 13 MODIFIED (13M)
INSTALL TYPE A NON-REFLECTIVE MARKER WITH STRIPING DETAIL 13M
INSTALL TYPE A MARKER BEFORE STRIPING TO GET THE PROPER BONDING

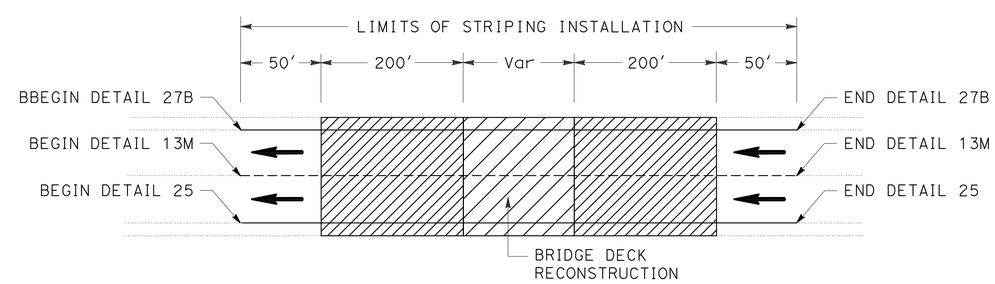

TYPICAL TRAFFIC STRIPE INSTALLATION
REPLACE IN KIND

PAVEMENT DELINEATION QUANTITIES

NO SCALE

PDQ-1

THIS PLAN ACCURATE FOR PAVEMENT DELINEATION WORK ONLY.

REVISED BY	DATE REVISED
P.B.	4/09

CALCULATED-DESIGNED BY: PATTI BARTOLI
CHECKED BY: SHABBIR AHMED
FUNCTIONAL SUPERVISOR: BILL WASSER

STATE OF CALIFORNIA - DEPARTMENT OF TRANSPORTATION
Caltrans
TRAFFIC DESIGN A

LAST REVISION 08-10-09 | DATE PLOTTED => 03-NOV-2009 | TIME PLOTTED => 0931

Dist	COUNTY	ROUTE	POST MILES TOTAL PROJECT	SHEET No.	TOTAL SHEETS
08	Riv	10	94.7/99.0	9	19

REGISTERED CIVIL ENGINEER DATE

11-2-09
PLANS APPROVAL DATE

REGISTERED PROFESSIONAL ENGINEER KEVIN H. CHEN No. 70017 Exp. 9/30/10 CIVIL STATE OF CALIFORNIA

THE STATE OF CALIFORNIA OR ITS OFFICERS OR AGENTS SHALL NOT BE RESPONSIBLE FOR THE ACCURACY OR COMPLETENESS OF SCANNED COPIES OF THIS PLAN SHEET.

PAVEMENT QUANTITIES

PM	LENGTH	WIDTH	HOT MIX ASPHALT (TYPE C)	TACK COAT	LIQUID ASPHALT (PRIME COAT)	COLD PLANE ASPHALT CONCRETE PAVEMENT	RUMBLE STRIPE	ASPHALTIC EMULSION (FOG SEAL COAT)	ROADWAY EXCAVATION	CL2 AB
	(Ft)	(Ft)	(TON)	(TON)	(TON)	(SqYd)	(Sta)	(TON)	(CY)	(CY)
R94.7/R99.0	2,560	39	7,115	-	3	-	-	-	9,505	7,215
R94.7/R99.0	6,400	39	-	7	-	27,735	-	-	-	-
R94.7/R99.0	3,840	39	1,685	-	-	-	-	-	-	-
R94.7/R99.0	12,800	15	-	-	-	-	128	11	-	-
TOTAL			8,800	7	3	27,735	128	11	9,505	7,215

ROADWAY QUANTITIES

PM	STRUCTURE NAME	STRUCTURE No.	LOCATION	RECONSTRUCT MBGR	MBGR	ALTERNATIVE IN-LINE TERMINAL SYSTEM	TRANSITION RAILING (TYPE WB) *	MINOR CONCRETE (MINOR STRUCTURE)	REMOVE METAL BEAM GUARD RAILING	REMOVE AC DIKE	PLACE HMA DIKE (TYPE F)	IMPORTED MATERIAL (SHOULDER BACKING)	MINOR HMA
				(LF)	(FT)	(EA)	(EA)	(CF)	(LF)	(LF)	(LF)	(TON)	(TON)
R94.7	TECKA DITCH	56-0118R	Rt Shld	150	0	1	1	32.6	65	150	150	0.31	4
			Lt Shld	150	0	1	1	32.6	65	-	-	0.31	-
R94.7	TECKA DITCH	56-0118L	Rt Shld	150	0	0	0	16.3	0	150	150	0.31	4
			Lt Shld	150	0	0	0	16.3	0	-	-	0.31	-
R95.0	EAGLE MOUNTAIN OH	56-0263R	Rt Shld	300	0	0	0	32.6	0	300	300	0.31	4
			Lt Shld	300	0	0	0	32.6	0	-	-	0.31	-
R95.0	EAGLE MOUNTAIN OH	56-0263L	Rt Shld	300	0	0	0	32.6	0	300	300	0.31	4
			Lt Shld	300	0	0	0	32.6	0	-	-	0.31	-
R96.5	IROLO DITCH	56-0113R	Rt Shld	0	75	1	1	16.3	65	-	-	0.31	-
			Lt Shld	0	75	1	1	16.3	65	-	-	0.31	-
R96.5	IROLO DITCH	56-0113L	Rt Shld	0	75	1	1	16.3	65	-	-	0.31	-
			Lt Shld	0	75	1	1	16.3	65	-	-	0.31	-
R96.8	AJAX DITCH	56-0112R	Rt Shld	0	75	1	1	16.3	65	-	-	0.31	-
			Lt Shld	0	75	1	1	16.3	65	-	-	0.31	-
R96.8	AJAX DITCH	56-0112L	Rt Shld	0	75	1	1	16.3	65	-	-	0.31	-
			Lt Shld	0	75	1	1	16.3	65	-	-	0.31	-
R97.3	SHANTY DITCH	56-0111L	Rt Shld	0	75	1	1	16.3	65	-	-	0.31	-
			Lt Shld	0	75	1	1	16.3	65	-	-	0.31	-
R97.3	SHANTY DITCH	56-0111R	Rt Shld	0	75	1	1	16.3	65	-	-	0.31	-
			Lt Shld	0	75	1	1	16.3	65	-	-	0.31	-
R97.8	UNION DITCH	56-0109L	Rt Shld	0	75	1	1	16.3	65	-	-	0.31	-
			Lt Shld	0	75	1	1	16.3	65	-	-	0.31	-
R97.8	UNION DITCH	56-0109R	Rt Shld	0	75	1	1	16.3	65	-	-	0.31	-
			Lt Shld	0	75	1	1	16.3	65	-	-	0.31	-
R98.8	BULA DITCH	56-0105L	Rt Shld	0	75	1	1	16.3	65	-	-	0.31	-
			Lt Shld	0	75	1	1	16.3	65	-	-	0.31	-
R98.8	BULA DITCH	56-0105R	Rt Shld	0	75	1	1	16.3	65	-	-	0.31	-
			Lt Shld	0	75	1	1	16.3	65	-	-	0.31	-
R99.0	TARO DITCH	56-0104L	Rt Shld	0	75	1	1	16.3	65	-	-	0.31	-
			Lt Shld	0	75	1	1	16.3	65	-	-	0.31	-
R99.0	TARO DITCH	56-0104R	Rt Shld	0	75	1	1	16.3	65	-	-	0.31	-
			Lt Shld	0	75	1	1	16.3	65	-	-	0.31	-
TOTAL				1,800	1,800	26	26	619.4	1,690	900	900	9.92	16

* FOR CONNECTION TYPE, SEE SHEET C-3 (TYPE 9 ALTERNATIVE 1).

SUMMARY OF QUANTITIES

Q-1

REVISED BY | DATE REVISED
KEVIN H. CHEN | KEVIN CHEN
CALCULATED-DESIGNED BY | CHECKED BY
FUNCTIONAL SUPERVISOR | KEVIN CHEN
STATE OF CALIFORNIA - DEPARTMENT OF TRANSPORTATION
Caltrans MAINTENANCE DESIGN

LAST REVISION 08-10-09 | DATE PLOTTED => 03-NOV-2009 | TIME PLOTTED => 09:31

DIST	COUNTY	ROUTE	POST MILES TOTAL PROJECT	SHEET NO.	TOTAL SHEETS
08	Riv	10	94.7/99.0	10	19

Randell D. Hiatt
REGISTERED CIVIL ENGINEER

June 6, 2008
PLANS APPROVAL DATE

REGISTERED PROFESSIONAL ENGINEER
Randell D. Hiatt
No. C50200
Exp. 6-30-09
CIVIL
STATE OF CALIFORNIA

The State of California or its officers or agents shall not be responsible for the accuracy or completeness of electronic copies of this plan sheet.

To accompany plans dated 11-2-09

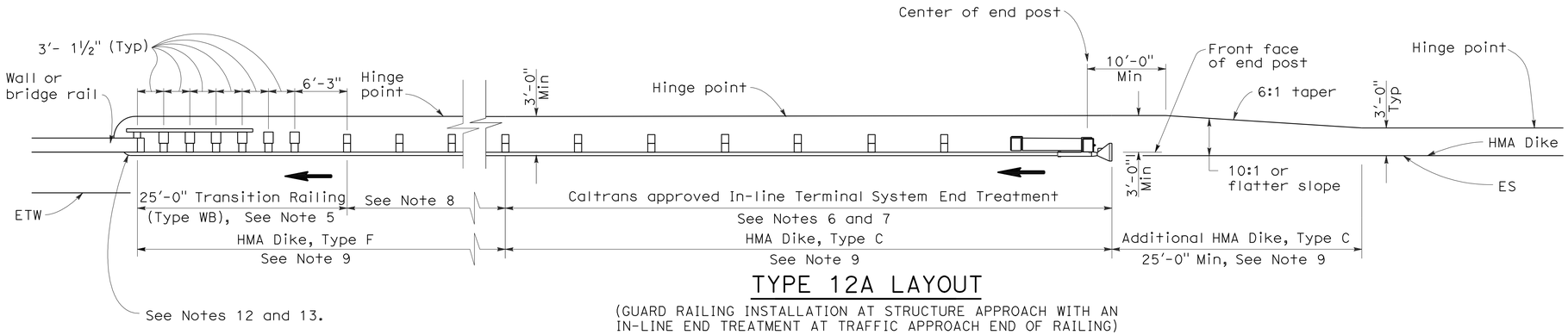

TYPE 12A LAYOUT

(GUARD RAILING INSTALLATION AT STRUCTURE APPROACH WITH AN IN-LINE END TREATMENT AT TRAFFIC APPROACH END OF RAILING)
See Notes 10

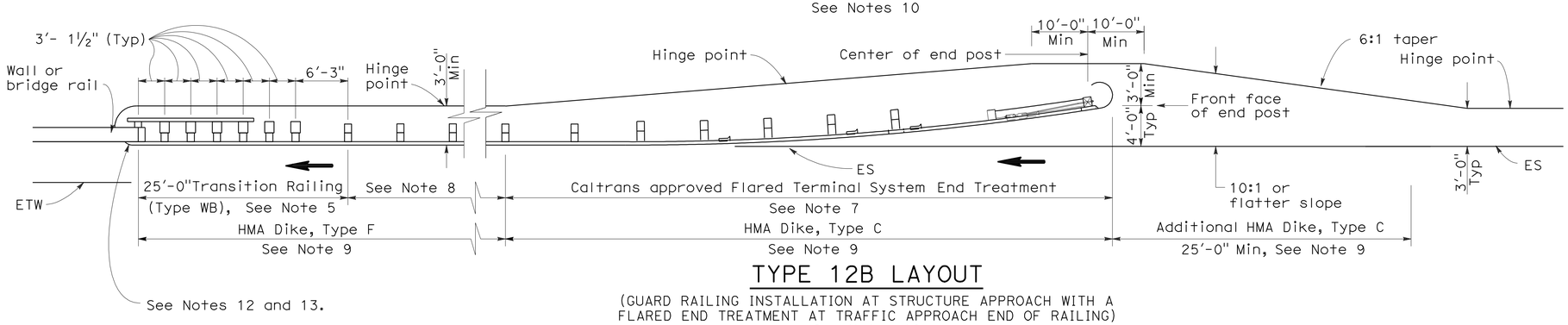

TYPE 12B LAYOUT

(GUARD RAILING INSTALLATION AT STRUCTURE APPROACH WITH A FLARED END TREATMENT AT TRAFFIC APPROACH END OF RAILING)
See Notes 10

NOTES:

1. Line post, blocks and hardware to be used are shown on Standard Plans A77A1, A77A2, A77B1, A77C1 and A77C2.
2. Guard rail post spacing to be 6'-3" center to center, except as otherwise noted.
3. Except as noted, line posts are 6" x 8" x 6'-0" wood with 6" x 8" x 1'-2" wood blocks. W6 x 9 steel posts, 6'-0" in length, with 6" x 8" x 1'-2" notched wood blocks or plastic blocks may be used for 6" x 8" x 6'-0" wood posts with 6" x 8" x 1'-2" wood blocks where applicable and when specified.
4. Direction of adjacent traffic indicated by ➡.
5. For Transition Railing (Type WB) details for Types 12A and 12B Layouts, see Standard Plan A77J4.
6. In-line Terminal System End Treatments are used where site conditions will not accommodate a flared end treatment.
7. The type of terminal system end treatment to be used will be shown on the Project Plans.
8. Dependent on site conditions (embankment height, side slopes, or other fixed objects), it may be advisable to construct additional guard railing (a length equal to multiples of 12'-6" with 6'-3" post spacing) between the transition railing and end treatment.
9. Where placement of dike is required with guard railing installations, see Revised Standard Plan RSP A77C4 for dike positioning details.
10. Type 12A or Type 12B Layouts are typically used:
    a. To the right of approaching traffic, at the end of a structure, on two-lane conventional highway where the roadbed width across the structure is less than 40 feet.
    b. To the left of approaching traffic, at the end of a structure, on two-lane conventional highway where the roadbed width across the structure is less than 40 feet.
    c. To the right of approaching traffic at the end of each structure on multilane freeways or expressways with separate adjacent or parallel bridges.
    d. To the right of approaching traffic at the end of the structure on multilane freeways or expressways with decked median on the bridge.
11. See Revised Standard Plan RSP A77F3 for typical layout used left of approaching traffic at the ends of each structure on multilane freeways or expressways with separate adjacent or parallel bridges.
12. For additional details of typical connections to bridge rail, see Connection Detail AA on Revised Standard Plans RSP A77J1 and RSP A77J2 and Connection Detail FF on Standard Plans A77K1 and A77K2.
13. For additional details of a typical connection to walls or abutments, see Standard Plan A77J3.

STATE OF CALIFORNIA
DEPARTMENT OF TRANSPORTATION

METAL BEAM GUARD RAILING TYPICAL LAYOUTS FOR STRUCTURE APPROACH

NO SCALE

RSP A77F1 DATED JUNE 6, 2008 SUPERSEDES STANDARD PLAN A77F1
DATED MAY 1, 2006 - PAGE 54 OF THE STANDARD PLANS BOOK DATED MAY 2006.

REVISED STANDARD PLAN RSP A77F1

2006 REVISED STANDARD PLAN RSP A77F1

12-10-07

DIST	COUNTY	ROUTE	POST MILES TOTAL PROJECT	SHEET NO.	TOTAL SHEETS
08	Riv	10	94.7/99.0	11	19

Randell D. Hiatt
REGISTERED CIVIL ENGINEER

June 5, 2009
PLANS APPROVAL DATE

REGISTERED PROFESSIONAL ENGINEER Randell D. Hiatt No. C50200 Exp. 6-30-09 CIVIL STATE OF CALIFORNIA

The State of California or its officers or agents shall not be responsible for the accuracy or completeness of electronic copies of this plan sheet.

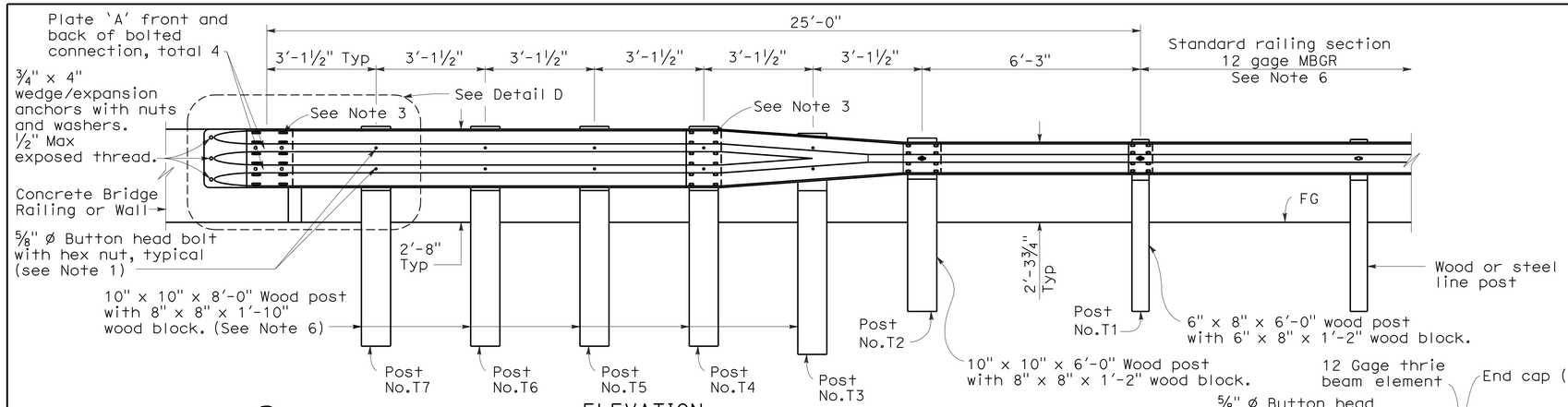

ELEVATION

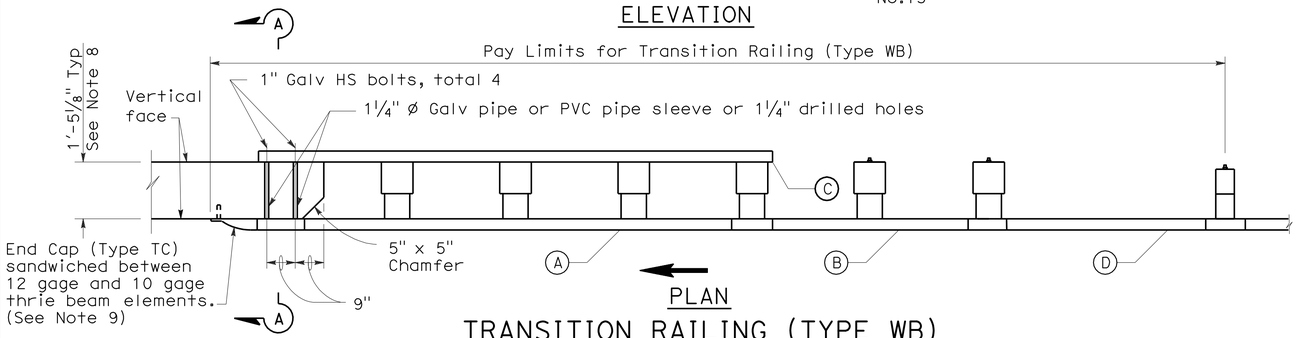

PLAN

TRANSITION RAILING (TYPE WB)

(No Blockout Attachment)

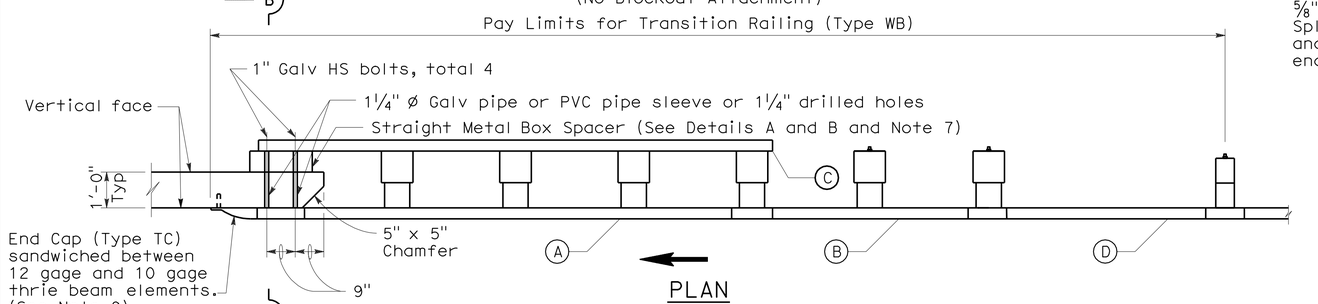

PLAN

TRANSITION RAILING (TYPE WB)

(Blockout Attachment)

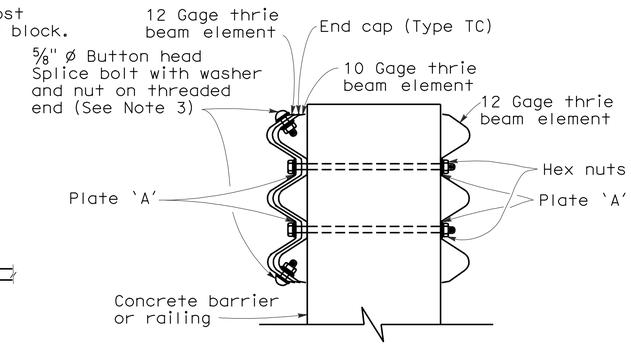

SECTION A-A

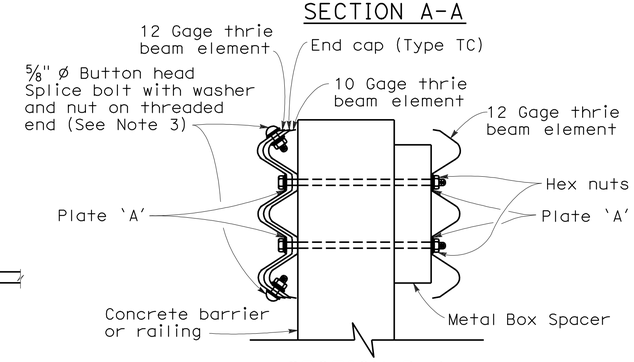

SECTION B-B

NOTES:

To accompany plans dated 11-2-09

1. Use 5/8 " Ø Button head bolts and hex nuts for connections to posts. No washer on rail face for bolted connections to post.
2. The nested rail elements, end cap, and 'W' beam to thrie beam element may be spliced together prior to bolting the elements to the wood post and concrete barrier or railing.
3. Exterior splice bolt holes for rail element splices at Post No.T4 and the connection to the concrete barrier or railing shall be the standard 29/32 " x 1 1/8 " slot size. Interior splice bolt holes at these locations may be increased up to 1 1/4 " Ø. Only the top 2 and the bottom 2 splice bolts with washers and nuts are required for rail splices at Post No.T4 and the connection to the concrete barrier or railing.
4. Direction of adjacent traffic indicated by →.
5. The top elevation of Post Nos.T2 through T7 shall not project more than 1" above the top elevation of the rail element.
6. Typically, the railing connected to Transition Railing (Type WB) will be either standard railing section of metal beam guard railing or an approved Caltrans end treatment attached to Post No.T1.
7. The depth of the metal box spacer varies from the 5 1/8 " to 1 1/2 " and is dependent on the width of the concrete railing or wall. The combined dimension for the depth of the metal box spacer plus the width of railing or wall is typically 17 1/8 ". Where the space between the backside of the concrete railing or wall and the rear thrie beam element is less than 1 1/2 ", metal plates similar to Plate 'A' are to be used as spacers.
8. Where the width of the concrete railing or wall is greater than 17 1/8 ", wood blocks are to be used to fill the space created between the backside of Posts No.4 through No.7 and the rear thrie beam element. These wood blocks shall be 8" in width and 1'-2" in length. The dimension between the front thrie beam element and the rear thrie beam element is to match the width of the concrete railing or wall.
9. End cap may be installed over 12 gage and 10 gage thrie beam elements where transition railing is installed on the departure end of bridge railing.

LEGEND

(A) Nested thrie beam elements (one 12 gage element nested over one 10 gage element).

(B) One 10 gage "W" beam to thrie beam element.

(C) One 12 gage thrie beam element.

(D) One 10 gage "W" beam rail element (7'-3½" length)

10 gage = 0.135" thick

12 gage = 0.108" thick

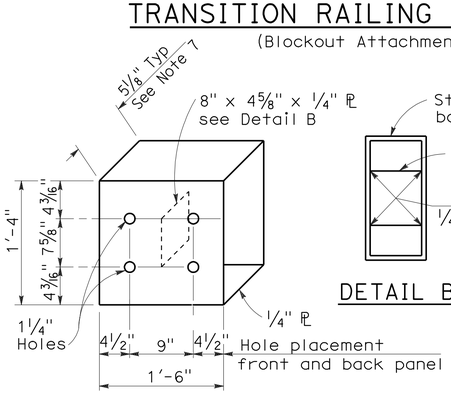

DETAIL A

STRAIGHT METAL BOX SPACER

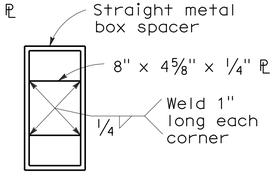

DETAIL B

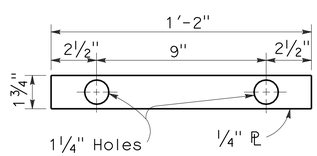

DETAIL C

PLATE 'A'

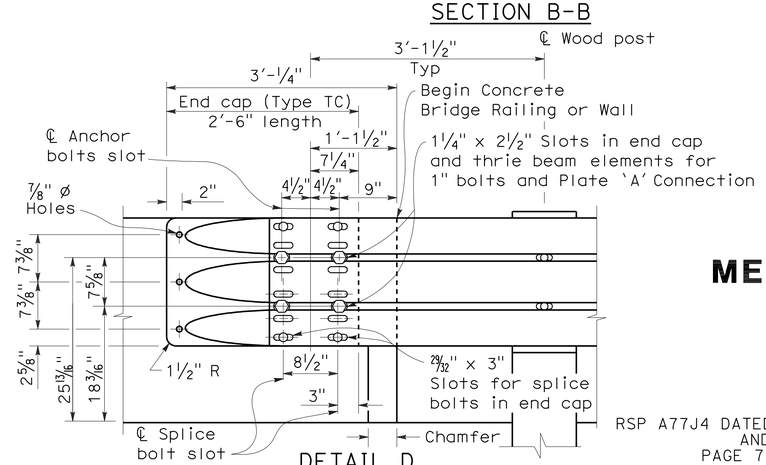

DETAIL D

STATE OF CALIFORNIA
DEPARTMENT OF TRANSPORTATION

METAL BEAM GUARD RAILING TRANSITION RAILING (TYPE WB)

NO SCALE

RSP A77J4 DATED JUNE 5, 2009 SUPERSEDES RSP A77J4 DATED JUNE 6, 2008 AND STANDARD PLAN A77J4 DATED MAY 1, 2006 - PAGE 75 OF THE STANDARD PLANS BOOK DATED MAY 2006.

REVISED STANDARD PLAN RSP A77J4

2006 REVISED STANDARD PLAN RSP A77J4

5-14-09

DIST	COUNTY	ROUTE	POST MILES TOTAL PROJECT	SHEET NO.	TOTAL SHEETS
08	Riv	10	94.7/99.0	12	19

Randell D. Hiatt
REGISTERED CIVIL ENGINEER

June 6, 2008
PLANS APPROVAL DATE

REGISTERED PROFESSIONAL ENGINEER
Randell D. Hiatt
No. C50200
Exp. 6-30-09
CIVIL
STATE OF CALIFORNIA

The State of California or its officers or agents shall not be responsible for the accuracy or completeness of electronic copies of this plan sheet.

To accompany plans dated 11-2-09

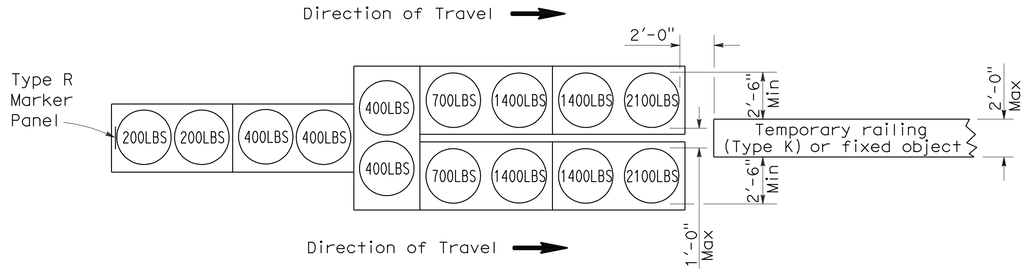

ARRAY 'TU14'

Approach speed 45 mph or more

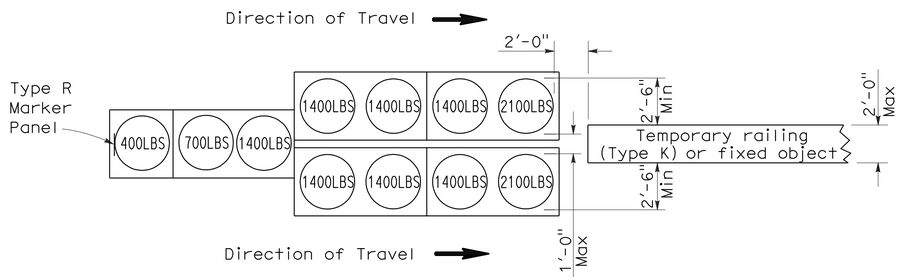

ARRAY 'TU11'

Approach speed less than 45 mph

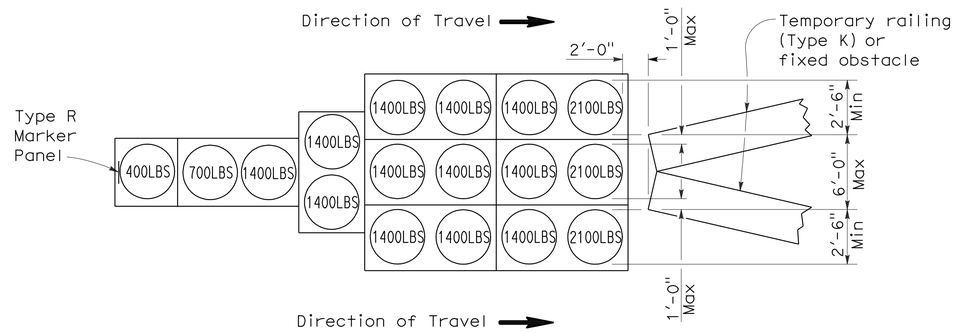

ARRAY 'TU17'

Approach speed less than 45 mph

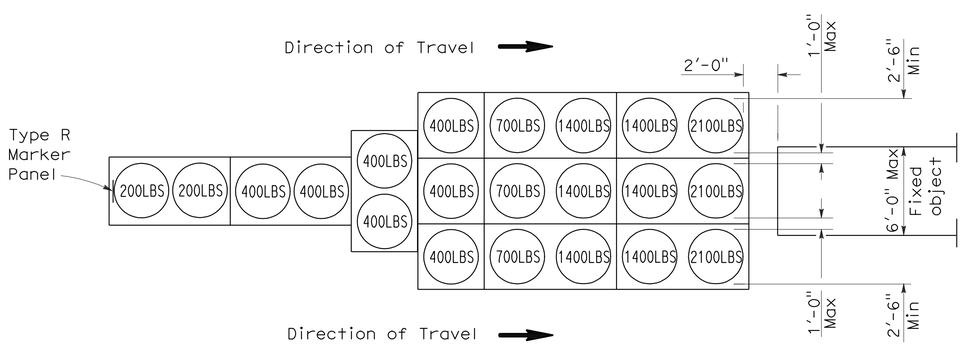

ARRAY 'TU21'

Approach speed 45 mph or more

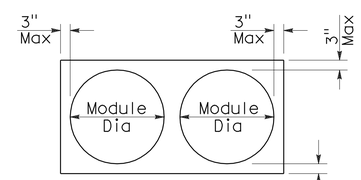

PLAN

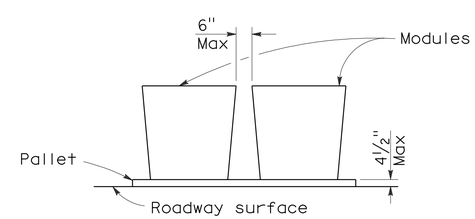

ELEVATION

CRASH CUSHION PALLET DETAIL

See Note 7

NOTES:

1. (XXX) Indicates sand filled module location and weight of sand in pounds for each module. Module spacing is based on the greater diameter of the module.
2. All sand weights are nominal.
3. Temporary crash cushion arrays shall not encroach on the traveled way.
4. Place the top of Type R marker panel 1" below the module lid.
5. Refer to Standard Plan A73B for marker details.
6. Approach speeds indicated conform to NCHRP 350 Report criteria.
7. Use of pallets is optional.

STATE OF CALIFORNIA
DEPARTMENT OF TRANSPORTATION

TEMPORARY CRASH CUSHION, SAND FILLED (UNIDIRECTIONAL)

NO SCALE

RSP T1A DATED JUNE 6, 2008 SUPERSEDES STANDARD PLAN T1A
DATED MAY 1, 2006 - PAGE 211 OF THE STANDARD PLANS BOOK DATED MAY 2006.

REVISED STANDARD PLAN RSP T1A

2006 REVISED STANDARD PLAN RSP T1A

DIST	COUNTY	ROUTE	POST MILES TOTAL PROJECT	SHEET NO.	TOTAL SHEETS
08	Riv	10	94.7/99.0	13	19

Randell D. Hiatt
REGISTERED CIVIL ENGINEER

June 6, 2008
PLANS APPROVAL DATE

REGISTERED PROFESSIONAL ENGINEER
Randell D. Hiatt
No. C50200
Exp. 6-30-09
CIVIL
STATE OF CALIFORNIA

The State of California or its officers or agents shall not be responsible for the accuracy or completeness of electronic copies of this plan sheet.

To accompany plans dated 11-2-09

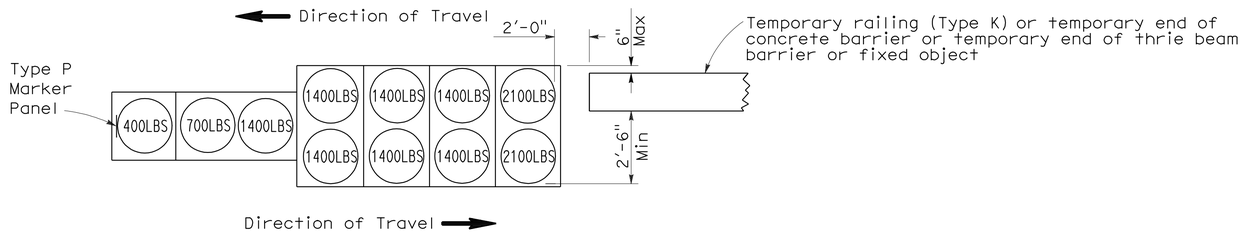

ARRAY 'TB11'

Approach speed less than 45 mph

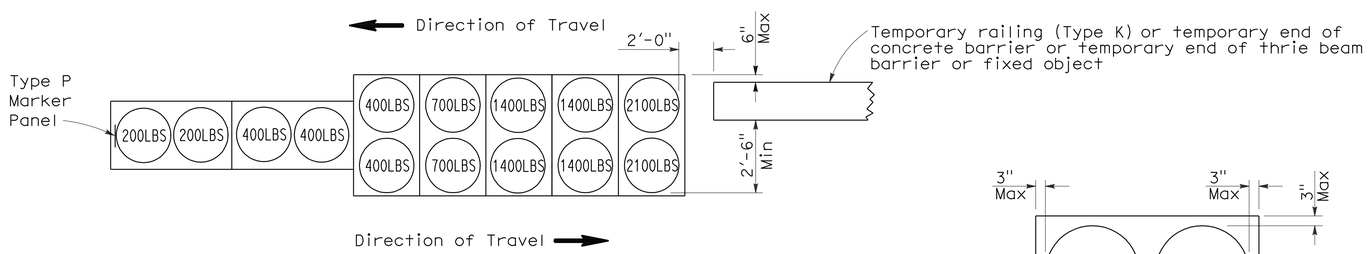

ARRAY 'TB14'

Approach speed 45 mph or more

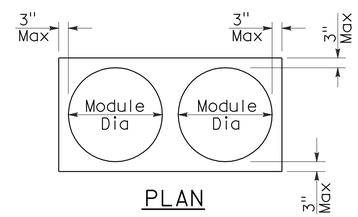

PLAN

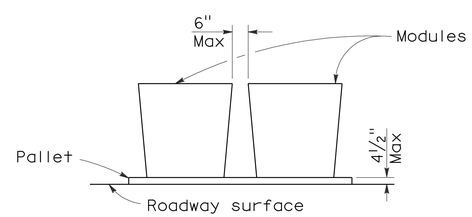

ELEVATION

CRASH CUSHION PALLET DETAIL

See Note 7

NOTES:

1. (XXX) Indicates sand filled module location and weight of sand in pounds for each module. Module spacing is based on the greater diameter of the module.
2. All sand weights are nominal.
3. Temporary crash cushion arrays shall not encroach on the traveled way.
4. Place the Type P marker panel so that the bottom of the panel rests upon the pallet.
5. Refer to Standard Plan A73B for marker details.
6. Approach speeds indicated conform to NCHRP 350 Report criteria.
7. Use of pallets is optional.

STATE OF CALIFORNIA
DEPARTMENT OF TRANSPORTATION

TEMPORARY CRASH CUSHION, SAND FILLED (BIDIRECTIONAL)

NO SCALE

RSP T1B DATED JUNE 6, 2008 SUPERSEDES STANDARD PLAN T1B
DATED MAY 1, 2006 - PAGE 212 OF THE STANDARD PLANS BOOK DATED MAY 2006.

REVISED STANDARD PLAN RSP T1B

2006 REVISED STANDARD PLAN RSP T1B

5-15-08

DIST	COUNTY	ROUTE	POST MILES TOTAL PROJECT	SHEET NO.	TOTAL SHEETS
08	Riv	10	94.7/99.0	14	19

Randell D. Hiatt
REGISTERED CIVIL ENGINEER

June 6, 2008
PLANS APPROVAL DATE

REGISTERED PROFESSIONAL ENGINEER
Randell D. Hiatt
No. C50200
Exp. 6-30-09
CIVIL
STATE OF CALIFORNIA

The State of California or its officers or agents shall not be responsible for the accuracy or completeness of electronic copies of this plan sheet.

To accompany plans dated 11-2-09

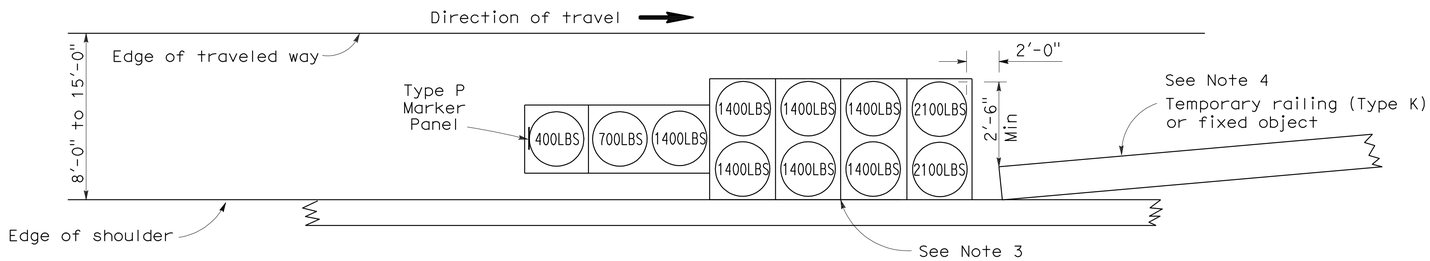

ARRAY 'TS11'

Approach speed less than 45 mph
See Note 9

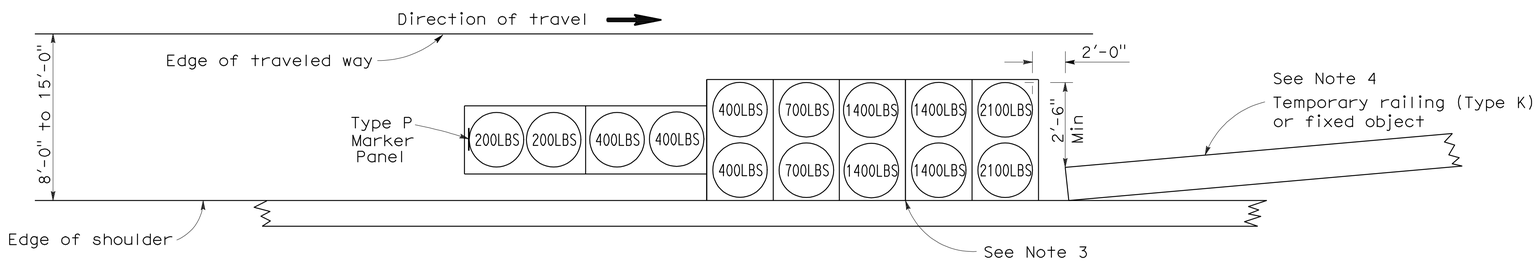

ARRAY 'TS14'

Approach speed 45 mph or more
See Note 9

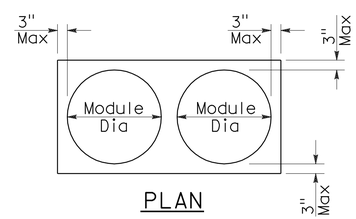

PLAN

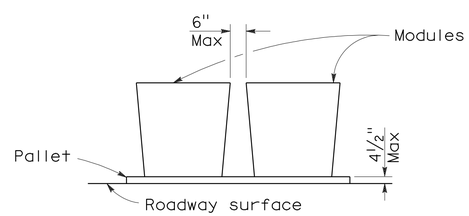

ELEVATION

CRASH CUSHION PALLET DETAIL

See Note 11

NOTES:

1. (XXX) Indicates sand filled module location and weight of sand in pounds for each module. Module spacing is based on the greater diameter of the module.
2. All sand weights are nominal.
3. The temporary crash cushion arrays shown on this plan shall be used only in locations where there will be traffic on one side of the temporary crash cushion array.
4. If the fixed object or approach end of the temporary railing is less than 15'-0" from the edge of traveled way, a temporary crash cushion is required in a construction or work zone.
5. Temporary crash cushion arrays shall not encroach on the traveled way.
6. Arrays for median shoulders shall conform to details shown on this plan for outside shoulders.
7. Place the Type P marker panel so that the bottom of the panel rests upon the pallet and faces traffic.
8. Refer to Standard Plan A73B for marker details.
9. For shoulder widths less than 8'-0", appropriate approved crash cushion protection, other than sand filled modules, shall be provided at fixed objects and at approach ends of temporary railing. The specific type of crash cushion shall be as shown on the project plans or as specified in the Special Provisions, or if not shown on the project plans or specified in the Special Provisions, shall be as approved by the Engineer.
10. Approach speeds indicated conform to NCHRP 350 Report criteria.
11. Use of pallets is optional.

STATE OF CALIFORNIA
DEPARTMENT OF TRANSPORTATION

TEMPORARY CRASH CUSHION, SAND FILLED (SHOULDER INSTALLATIONS)

NO SCALE

RSP T2 DATED JUNE 6, 2008 SUPERSEDES STANDARD PLAN T2
DATED MAY 1, 2006 - PAGE 213 OF THE STANDARD PLANS BOOK DATED MAY 2006.

REVISED STANDARD PLAN RSP T2

2006 REVISED STANDARD PLAN RSP T2

5-15-08

DIST	COUNTY	ROUTE	POST MILES TOTAL PROJECT	SHEET NO.	TOTAL SHEETS
08	Riv	10	94.7/99.0	15	19

REGISTERED CIVIL ENGINEER 5-13-09 DATE

11-2-09
PLANS APPROVAL DATE

REGISTERED PROFESSIONAL ENGINEER MARTIN B. FURLONG No. C70764 Exp. 06-30-11 CIVIL STATE OF CALIFORNIA

THE STATE OF CALIFORNIA OR ITS OFFICERS OR AGENTS SHALL NOT BE RESPONSIBLE FOR THE ACCURACY OR COMPLETENESS OF ELECTRONIC COPIES OF THIS PLAN SHEET.

INDEX TO PLANS

SHEET NO.	TITLE
1	GENERAL PLAN NO.1
2	GENERAL PLAN NO.2
3	GENERAL PLAN NO.3
4	GENERAL PLAN NO.4
5	QUANTITIES AND DETAILS

STANDARD PLANS DATED MAY 2006

SHEET NO.	TITLE
A10A	ACRONYMS AND ABBREVIATIONS (SHEET 1 OF 2)
A10B	ACRONYMS AND ABBREVIATIONS (SHEET 2 OF 2)

NOTES:

Indicates existing.

Indicates limits of clean and treat bridge deck with high molecular weight methacrylate. Prior to bridge deck treatment remove unsound concrete and patch with rapid setting concrete.

Indicates limits of remove existing 4"± thick AC overlay.

Indicates epoxy inject soffit cracks. Location to be detemined by the Engineer.

(1) See "ROAD PLANS" for remove existing pavement surface to conform to new deck grade.

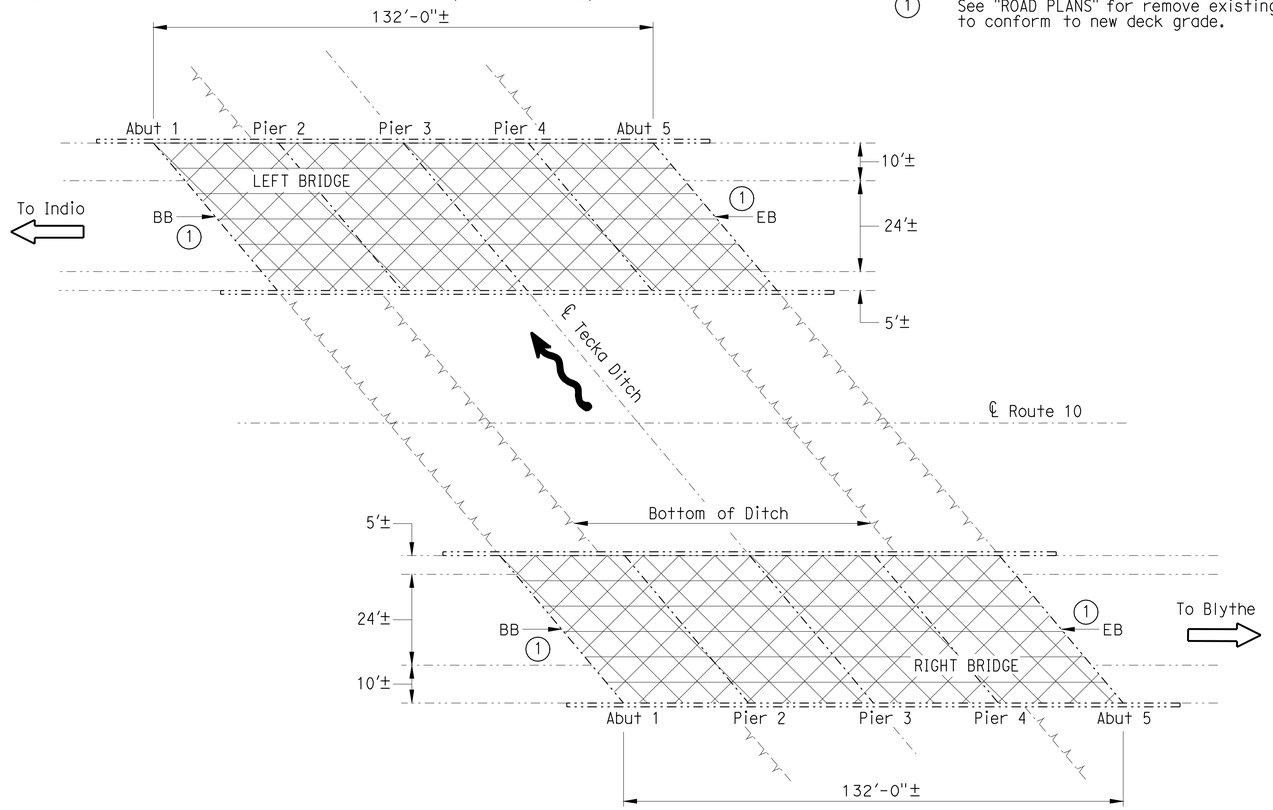

TECKA DITCH

Br No. 56-0118 L/R, RIV, Route 10, PM R94.73
1"=20'

TECKA DITCH BRIDGE Br No. 56-0118 L/R

QUANTITIES

REMOVE ASPHALT CONCRETE SURFACING	10,300	SQFT
REMOVE UNSOUND CONCRETE	26	CF
CLEAN BRIDGE DECK	10,300	SQFT
RAPID SETTING CONCRETE (PATCH)	26	CF
INJECT CRACK (EPOXY)	225	LF
TREAT BRIDGE DECK	10,300	SQFT
FURNISH BRIDGE DECK TREATMENT MATERIAL	114	GAL

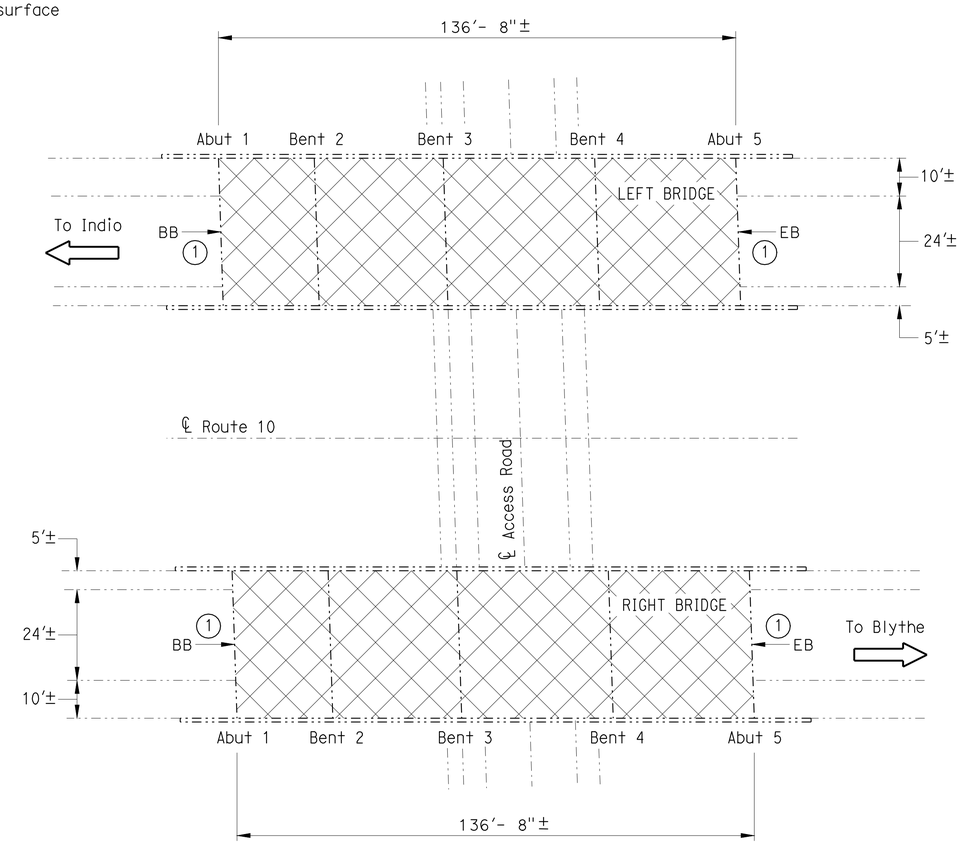

EAGLE MOUNTAIN OH

Br No. 56-0263 L/R, RIV, Route 10, PM R95.05
1"=20'

EAGLE MOUNTAIN OVERHEAD Br No. 56-0263 L/R

QUANTITIES

REMOVE ASPHALT CONCRETE SURFACING	10,660	SQFT
REMOVE UNSOUND CONCRETE	27	CF
CLEAN BRIDGE DECK	10,660	SQFT
RAPID SETTING CONCRETE (PATCH)	27	CF
TREAT BRIDGE DECK	10,660	SQFT
FURNISH BRIDGE DECK TREATMENT MATERIAL	118	GAL

NOTE:
THE CONTRACTOR SHALL VERIFY ALL CONTROLLING FIELD DIMENSIONS BEFORE ORDERING OR FABRICATING ANY MATERIAL.

DESIGN ENGINEER 5-13-09	DESIGN	BY M. Furlong	CHECKED D. Acoba	LAYOUT	BY N. Kelley	CHECKED D. Acoba	STATE OF CALIFORNIA DEPARTMENT OF TRANSPORTATION
	DETAILS	BY N. Kelley	CHECKED D. Acoba	SPECIFICATIONS	BY T. Kershell	PLANS AND SPECIFICATIONS COMPARED M. Furlong	
	QUANTITIES	BY M. Furlong	CHECKED D. Acoba				

DIVISION OF MAINTENANCE
STRUCTURE MAINTENANCE DESIGN

BRIDGE NO. Varies
POST MILE Various

ROUTE 10 BRIDGES
GENERAL PLAN NO. 1

STRUCTURES MAINTENANCE GENERAL PLAN & DETAIL SHEET (ENGLISH) (REV. 10/17/07)

ORIGINAL SCALE IN INCHES FOR REDUCED PLANS 0 1 2 3

CU 08608
EA 0K6811

DISREGARD PRINTS BEARING EARLIER REVISION DATES

REVISION DATES: 10-3-08 10-20-08 4-22-09 5-14-09

SHEET 1 OF 5

FILE => 08_0k6811_ggp1.dgn

USERNAME => trfright DATE PLOTTED => 03-NOV-2009 TIME PLOTTED => 09:32

DIST	COUNTY	ROUTE	POST MILES TOTAL PROJECT	SHEET NO.	TOTAL SHEETS
08	Riv	10	94.7/99.0	16	19

REGISTERED CIVIL ENGINEER 5-13-09 DATE

11-2-09
PLANS APPROVAL DATE

REGISTERED PROFESSIONAL ENGINEER MARTIN B. FURLONG No. C70764 Exp. 06-30-11 CIVIL STATE OF CALIFORNIA

THE STATE OF CALIFORNIA OR ITS OFFICERS OR AGENTS SHALL NOT BE RESPONSIBLE FOR THE ACCURACY OR COMPLETENESS OF ELECTRONIC COPIES OF THIS PLAN SHEET.

NOTES:

-·-·-·-·- Indicates existing.

Indicates limits of clean and treat bridge deck with high molecular weight methacrylate. Prior to bridge deck treatment remove unsound concrete and patch with rapid setting concrete.

Indicates limits of remove existing 4"± thick AC overlay.

(1) See "ROAD PLANS" for remove existing pavement surface to conform to new deck grade.

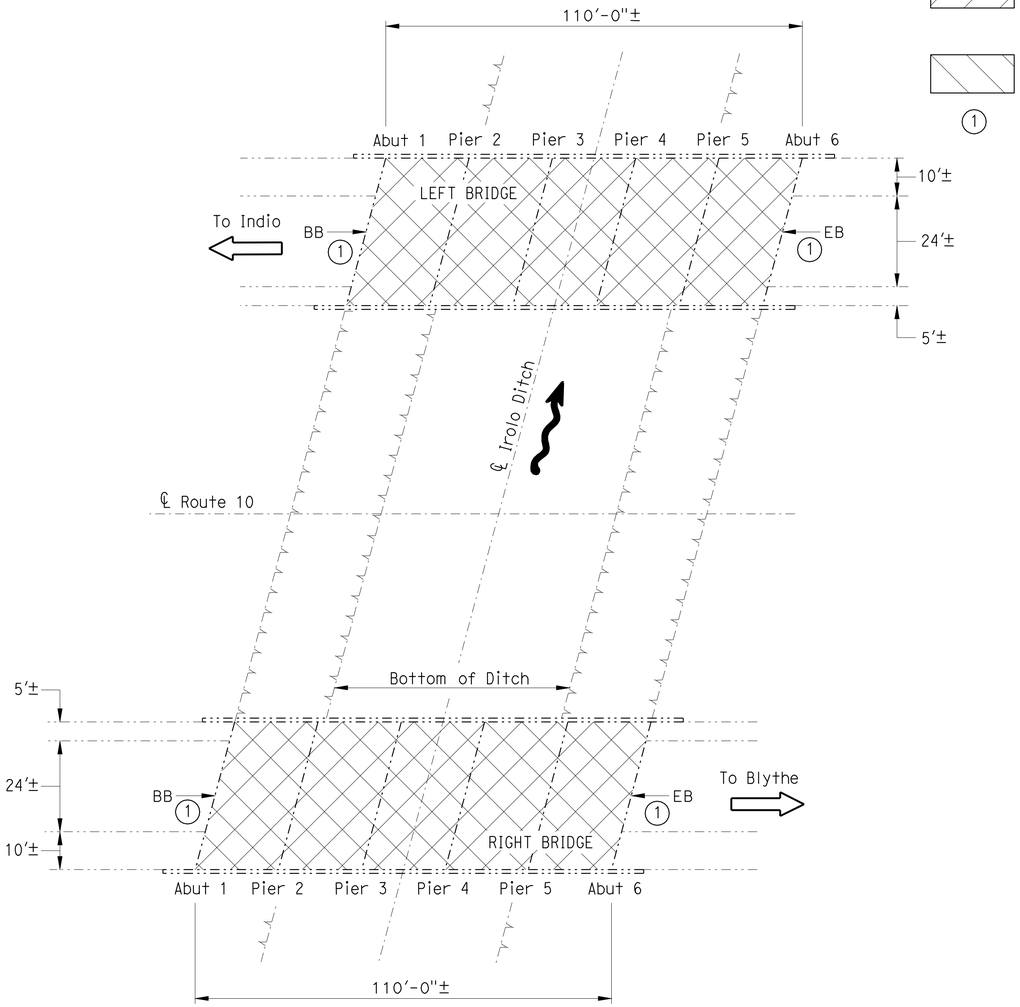

IROLO DITCH

Br No. 56-0113 L/R, RIV, Route 10, PM R96.50
1"=20'

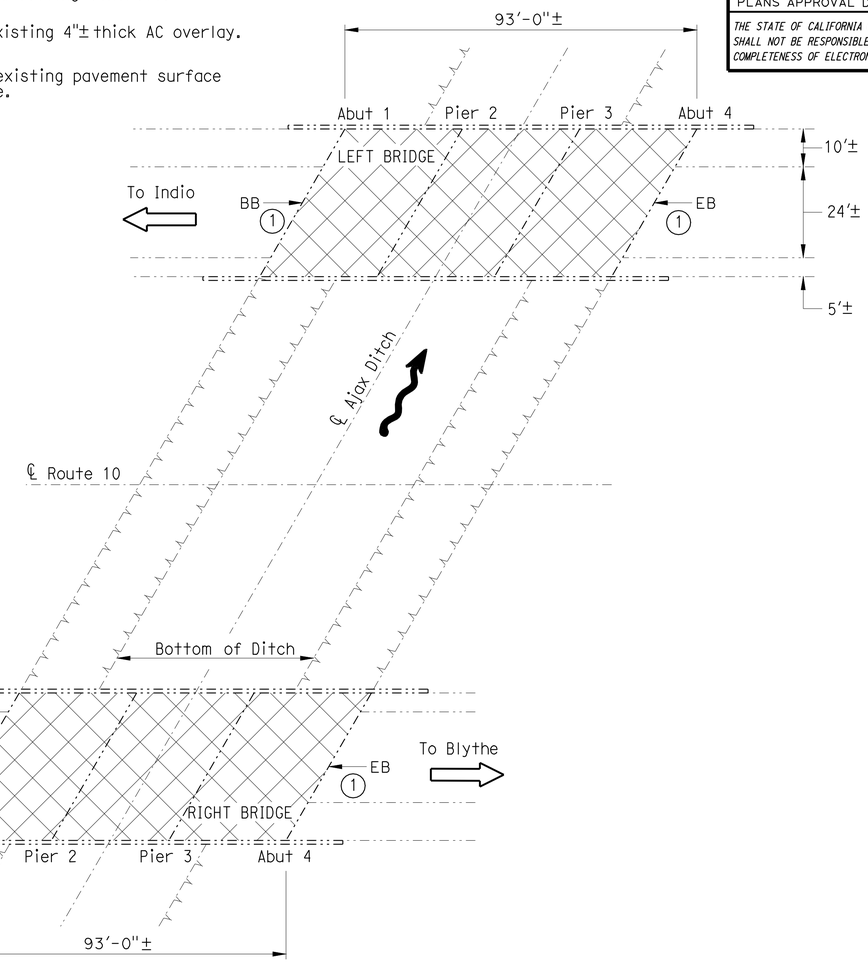

AJAX DITCH

Br No. 56-0112 L/R, RIV, Route 10, PM R96.83
1"=20'

IROLO DITCH BRIDGE — Br No. 56-0113 L/R

QUANTITIES

REMOVE ASPHALT CONCRETE SURFACING	8,580	SQFT
REMOVE UNSOUND CONCRETE	21	CF
CLEAN BRIDGE DECK	8,580	SQFT
RAPID SETTING CONCRETE (PATCH)	21	CF
TREAT BRIDGE DECK	8,580	SQFT
FURNISH BRIDGE DECK TREATMENT MATERIAL	95	GAL

AJAX DITCH BRIDGE — Br No. 56-0112 L/R

QUANTITIES

REMOVE ASPHALT CONCRETE SURFACING	7,260	SQFT
REMOVE UNSOUND CONCRETE	18	CF
CLEAN BRIDGE DECK	7,260	SQFT
RAPID SETTING CONCRETE (PATCH)	18	CF
TREAT BRIDGE DECK	7,260	SQFT
FURNISH BRIDGE DECK TREATMENT MATERIAL	80	GAL

NOTE:
THE CONTRACTOR SHALL VERIFY ALL CONTROLLING FIELD DIMENSIONS BEFORE ORDERING OR FABRICATING ANY MATERIAL.

5-13-09 DESIGN ENGINEER	DESIGN	BY M. Furlong	CHECKED D. Acoba	LAYOUT	BY N. Kelley	CHECKED D. Acoba
	DETAILS	BY N. Kelley	CHECKED D. Acoba	SPECIFICATIONS	BY T. Kershell	PLANS AND SPECIFICATIONS COMPARED M. Furlong
	QUANTITIES	BY M. Furlong	CHECKED D. Acoba			

STATE OF CALIFORNIA DEPARTMENT OF TRANSPORTATION

DIVISION OF MAINTENANCE STRUCTURE MAINTENANCE DESIGN

CU 08608
EA 0K6811

BRIDGE NO. Varies
POST MILE Various

ROUTE 10 BRIDGES

GENERAL PLAN NO. 2

STRUCTURES MAINTENANCE GENERAL PLAN & DETAIL SHEET (ENGLISH) (REV. 10/17/07)

ORIGINAL SCALE IN INCHES FOR REDUCED PLANS 0 1 2 3

DISREGARD PRINTS BEARING EARLIER REVISION DATES — REVISION DATES 10-3-08 10-20-08 4-22-09 5-14-09

SHEET 2 OF 5

FILE => 08_0k6811_bgp2.dgn

USERNAME => trrichf DATE PLOTTED => 03-NOV-2009 TIME PLOTTED => 09:32

DIST	COUNTY	ROUTE	POST MILES TOTAL PROJECT	SHEET NO.	TOTAL SHEETS
08	Riv	10	94.7/99.0	17	19

REGISTERED CIVIL ENGINEER 5-13-09 DATE

11-2-09
PLANS APPROVAL DATE

REGISTERED PROFESSIONAL ENGINEER MARTIN B. FURLONG No. C70764 Exp. 06-30-11 CIVIL STATE OF CALIFORNIA

THE STATE OF CALIFORNIA OR ITS OFFICERS OR AGENTS SHALL NOT BE RESPONSIBLE FOR THE ACCURACY OR COMPLETENESS OF ELECTRONIC COPIES OF THIS PLAN SHEET.

NOTES:

-·-·-·-·- Indicates existing.

Indicates limits of clean and treat bridge deck with high molecular weight methacrylate. Prior to bridge deck treatment remove unsound concrete and patch with rapid setting concrete.

Indicates limits of remove existing 4"± thick AC overlay.

(1) See "ROAD PLANS" for remove existing pavement surface to conform to new deck grade.

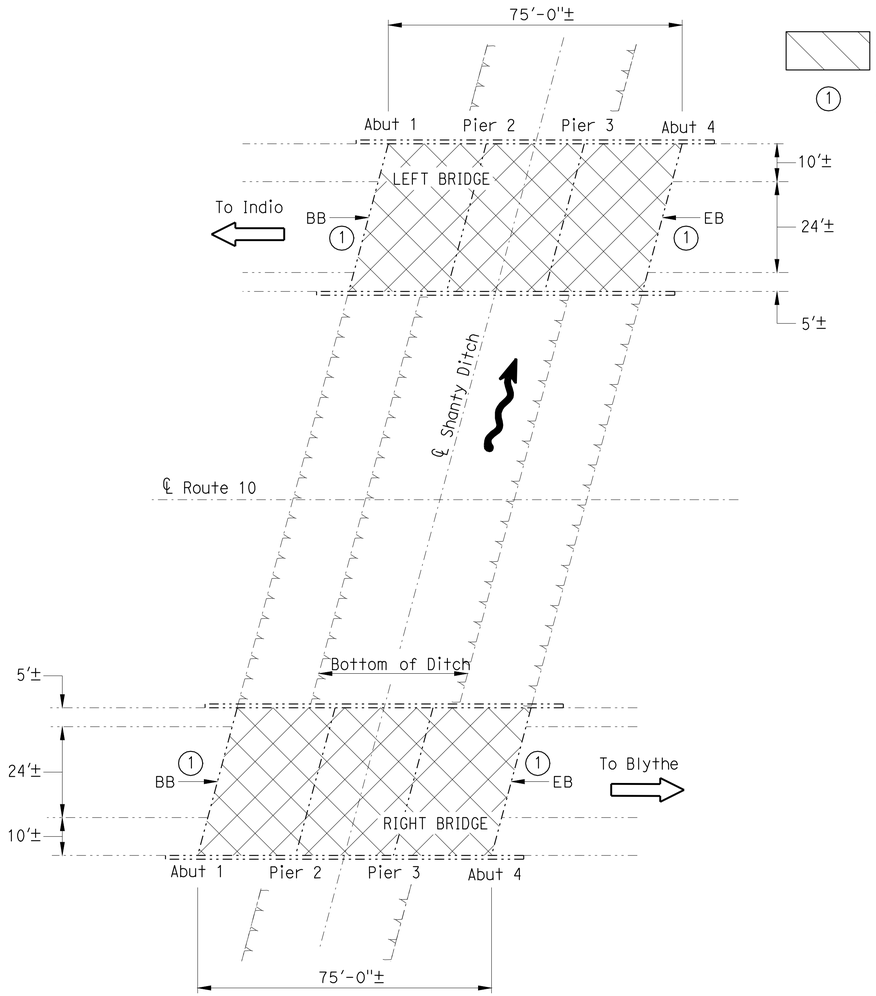

SHANTY DITCH

Br No. 56-0111 L/R, RIV, Route 10, PM R97.33
1"=20'

SHANTY DITCH BRIDGE — Br No. 56-0111 L/R

QUANTITIES

REMOVE ASPHALT CONCRETE SURFACING	5,850	SQFT
REMOVE UNSOUND CONCRETE	15	CF
CLEAN BRIDGE DECK	5,850	SQFT
RAPID SETTING CONCRETE (PATCH)	15	CF
TREAT BRIDGE DECK	5,850	SQFT
FURNISH BRIDGE DECK TREATMENT MATERIAL	65	GAL

NOTE:
THE CONTRACTOR SHALL VERIFY ALL CONTROLLING FIELD DIMENSIONS BEFORE ORDERING OR FABRICATING ANY MATERIAL.

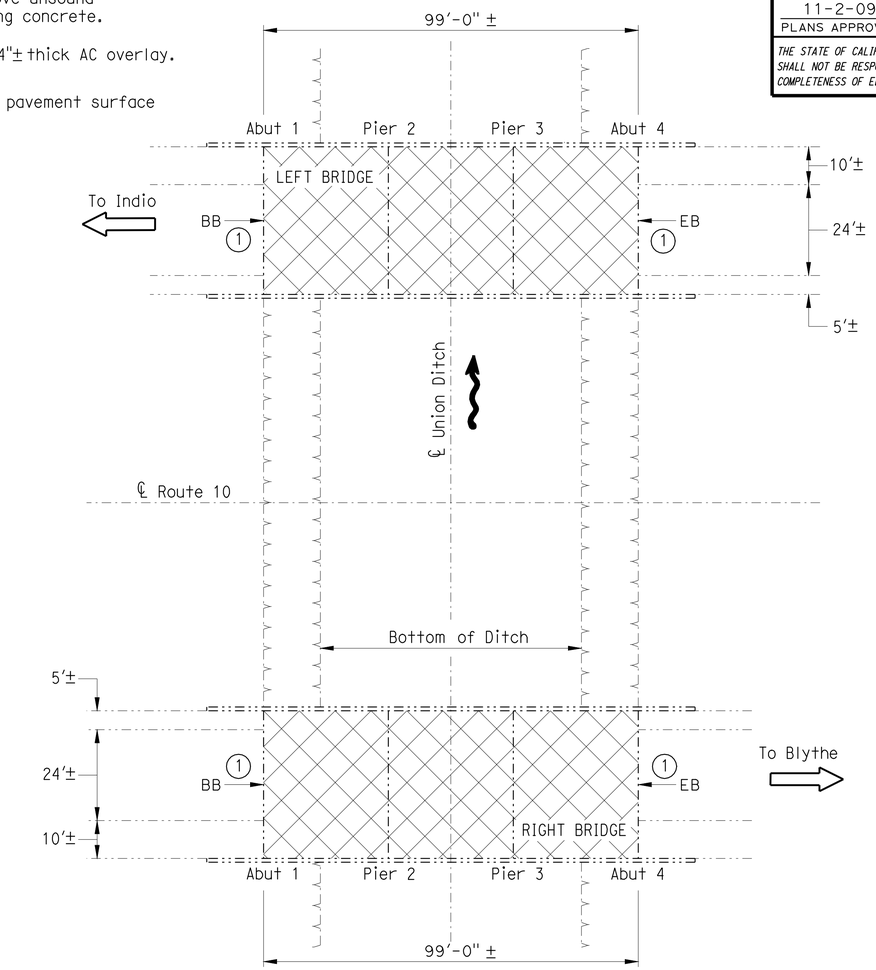

UNION DITCH

Br No. 56-0109L/R, RIV, Route 10, PM R97.81
1"=20'

UNION DITCH BRIDGE — Br No. 56-0109 L/R

QUANTITIES

REMOVE ASPHALT CONCRETE SURFACING	7,730	SQFT
REMOVE UNSOUND CONCRETE	19	CF
CLEAN BRIDGE DECK	7,730	SQFT
RAPID SETTING CONCRETE (PATCH)	19	CF
TREAT BRIDGE DECK	7,730	SQFT
FURNISH BRIDGE DECK TREATMENT MATERIAL	86	GAL

DESIGN ENGINEER 5-13-09	DESIGN	BY M. Furlong	CHECKED D. Acoba	LAYOUT	BY N. Kelley
	DETAILS	BY N. Kelley	CHECKED D. Acoba		
	QUANTITIES	BY M. Furlong	CHECKED D. Acoba	SPECIFICATIONS	BY T. Kershell

CHECKED D. Acoba
PLANS AND SPECIFICATIONS COMPARED M. Furlong

STATE OF CALIFORNIA
DEPARTMENT OF TRANSPORTATION

DIVISION OF MAINTENANCE
STRUCTURE MAINTENANCE DESIGN

BRIDGE NO. Varies
POST MILE Various

ROUTE 10 BRIDGES
GENERAL PLAN NO. 3

STRUCTURES MAINTENANCE GENERAL PLAN & DETAIL SHEET (ENGLISH) (REV. 10/17/07)

ORIGINAL SCALE IN INCHES FOR REDUCED PLANS 0 1 2 3

CU 08608
EA 0K6811

DISREGARD PRINTS BEARING EARLIER REVISION DATES

REVISION DATES: 10-3-08 10-20-08 4-22-09 5-14-09

SHEET 3 OF 5

FILE => 08_0k6811_cgp3.dgn

USERNAME => trrright DATE PLOTTED => 03-NOV-2009 TIME PLOTTED => 09:33

DIST	COUNTY	ROUTE	POST MILES TOTAL PROJECT	SHEET NO.	TOTAL SHEETS
08	Riv	10	94.7/99.0	18	19

REGISTERED CIVIL ENGINEER 5-13-09 DATE

11-2-09
PLANS APPROVAL DATE

REGISTERED PROFESSIONAL ENGINEER MARTIN B. FURLONG No. C70764 Exp. 06-30-11 CIVIL STATE OF CALIFORNIA

THE STATE OF CALIFORNIA OR ITS OFFICERS OR AGENTS SHALL NOT BE RESPONSIBLE FOR THE ACCURACY OR COMPLETENESS OF ELECTRONIC COPIES OF THIS PLAN SHEET.

NOTES:

-·-·-·-·- Indicates existing.

Indicates limits of clean and treat bridge deck with high molecular weight methacrylate. Prior to bridge deck treatment remove unsound concrete and patch with rapid setting concrete.

Indicates limits of remove existing 4"± thick AC overlay.

Indicates epoxy inject soffit cracks. Location to be determined by Engineer.

(1) See "ROAD PLANS" for remove existing pavement surface to conform to new deck grade.

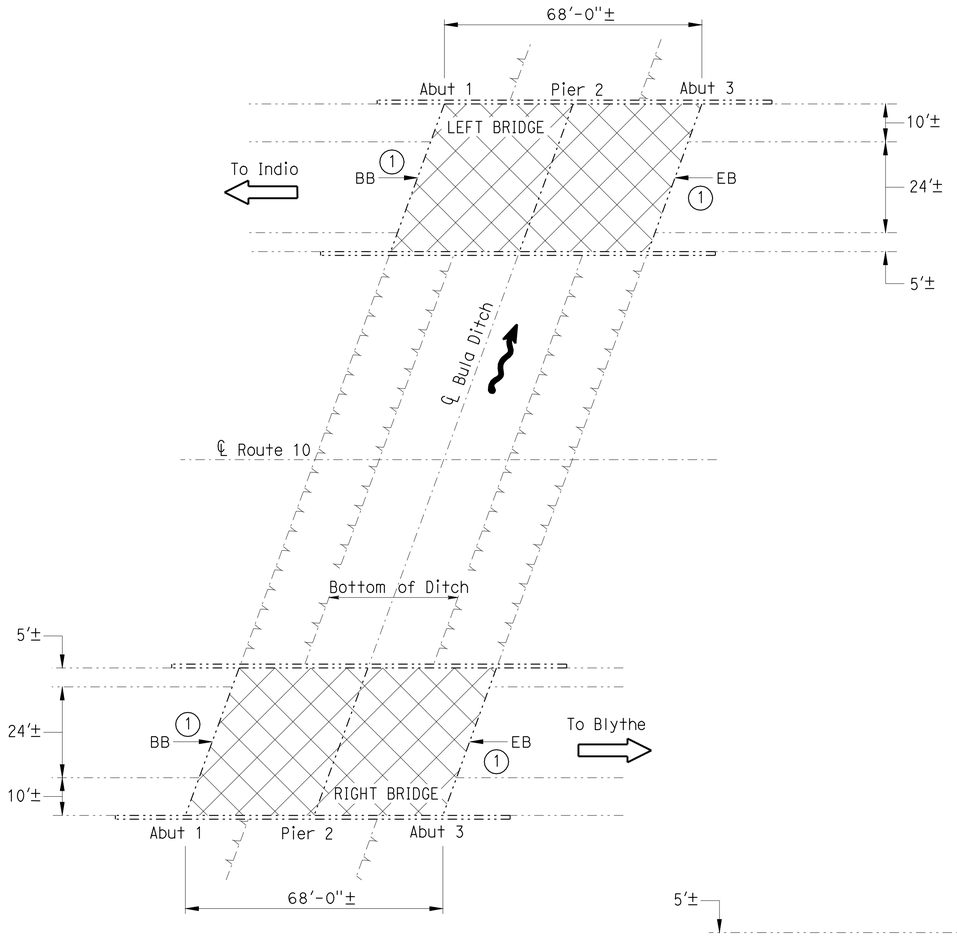

BULA DITCH

Br No. 56-0105L/R, RIV, Route 10, PM R98.78
1"=20'

BULA DITCH BRIDGEE — Br No. 56-0105 L/R

QUANTITIES

REMOVE ASPHALT CONCRETE SURFACING	5,310	SQFT
REMOVE UNSOUND CONCRETE	13	CF
CLEAN BRIDGE DECK	5,310	SQFT
RAPID SETTING CONCRETE (PATCH)	13	CF
TREAT BRIDGE DECK	5,310	SQFT
FURNISH BRIDGE DECK TREATMENT MATERIAL	59	GAL

NOTE:
THE CONTRACTOR SHALL VERIFY ALL CONTROLLING FIELD DIMENSIONS BEFORE ORDERING OR FABRICATING ANY MATERIAL.

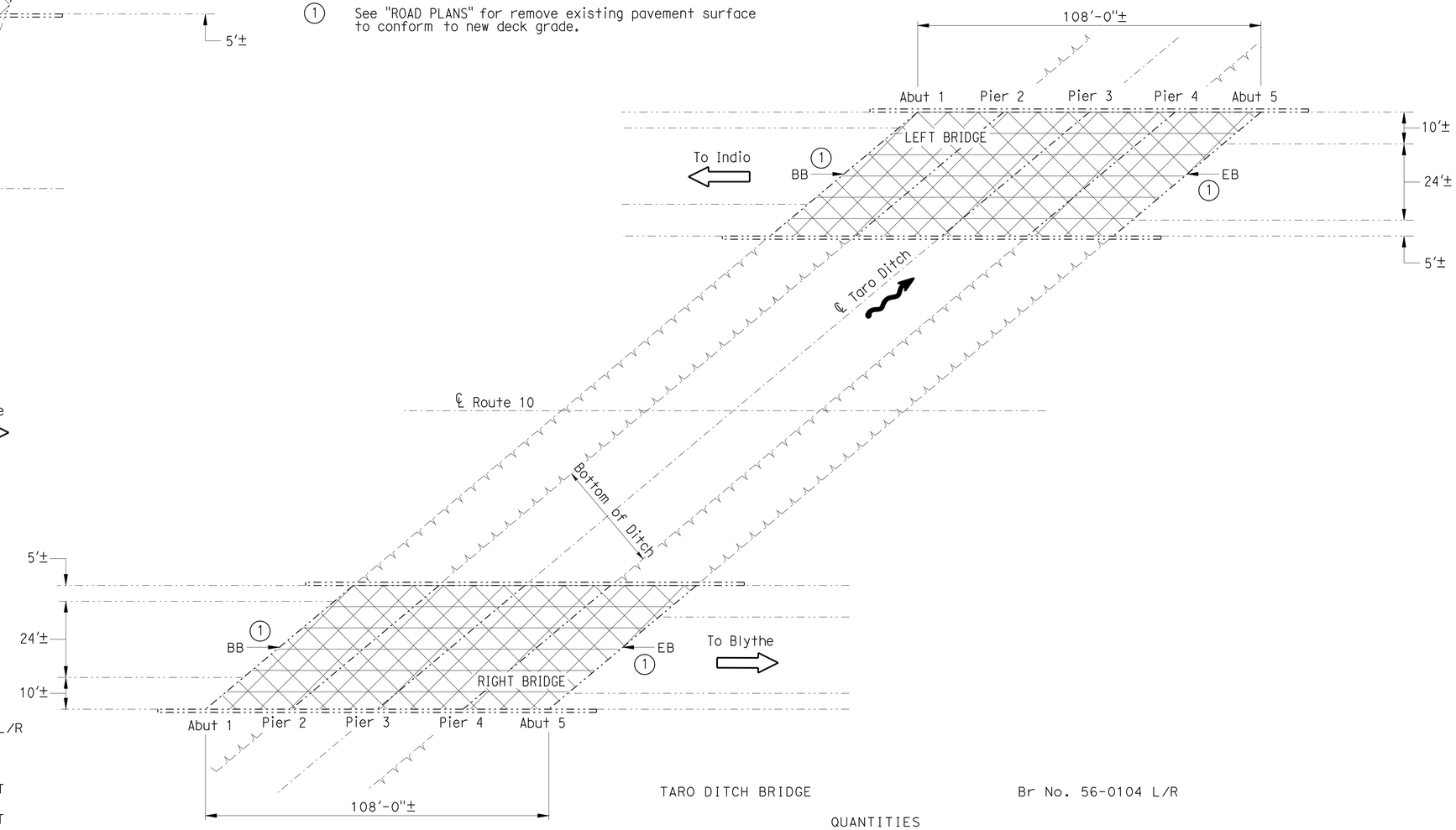

TARO DITCH

Br No. 56-0104L/R, RIV, Route 10, PM R99.04
1"=20'

TARO DITCH BRIDGE — Br No. 56-0104 L/R

QUANTITIES

REMOVE ASPHALT CONCRETE SURFACING	8,430	SQFT
REMOVE UNSOUND CONCRETE	21	CF
CLEAN BRIDGE DECK	8,430	SQFT
RAPID SETTING CONCRETE (PATCH)	21	CF
INJECT CRACK (EPOXY)	160	LF
TREAT BRIDGE DECK	8,430	SQFT
FURNISH BRIDGE DECK TREATMENT MATERIAL	94	GAL

DESIGN ENGINEER 5-13-09

	BY	CHECKED
DESIGN	M. Furlong	D. Acobo
DETAILS	N. Kelley	D. Acobo
QUANTITIES	M. Furlong	D. Acobo
LAYOUT	N. Kelley	D. Acobo
SPECIFICATIONS	T. Kershell	M. Furlong (PLANS AND SPECIFICATIONS COMPARED)

STATE OF CALIFORNIA
DEPARTMENT OF TRANSPORTATION

DIVISION OF MAINTENANCE
STRUCTURE MAINTENANCE DESIGN

BRIDGE NO. Varies
POST MILE Various

ROUTE 10 BRIDGES
GENERAL PLAN NO. 4

STRUCTURES MAINTENANCE GENERAL PLAN & DETAIL SHEET (ENGLISH) (REV. 10/17/07)

ORIGINAL SCALE IN INCHES FOR REDUCED PLANS 0 1 2 3

CU 08608
EA 0K6811

DISREGARD PRINTS BEARING EARLIER REVISION DATES

REVISION DATES: ~~10-3-08~~ ~~10-20-08~~ ~~4-22-09~~ 5-14-09

SHEET 4 OF 5

FILE => 08_0k6811_dgp4.dgn

USERNAME => trrichf DATE PLOTTED => 03-NOV-2009 TIME PLOTTED => 09:33

DIST	COUNTY	ROUTE	POST MILES TOTAL PROJECT	SHEET NO.	TOTAL SHEETS
08	Riv	10	94.7/99.0	19	19

REGISTERED CIVIL ENGINEER 5-13-09 DATE

11-2-09
PLANS APPROVAL DATE

REGISTERED PROFESSIONAL ENGINEER MARTIN B. FURLONG No. C70764 Exp. 06-30-11 CIVIL STATE OF CALIFORNIA

THE STATE OF CALIFORNIA OR ITS OFFICERS OR AGENTS SHALL NOT BE RESPONSIBLE FOR THE ACCURACY OR COMPLETENESS OF ELECTRONIC COPIES OF THIS PLAN SHEET.

NOTE:

-·-·-·-·- Indicates existing.

DECK REPAIR TABLE
REMOVE UNSOUND CONCRETE AND RAPID SETTING CONCRETE (PATCH)

BRIDGE NUMBER	BRIDGE NAME	APPROXIMATE AREA DAMAGED (PERCENT)	APPROXIMATE DEPTH (INCHES)
56-0118L	TECKA DITCH	1	3
56-0118R	TECKA DITCH	1	3
56-0263L	EAGLE MT DITCH	1	3
56-0263R	EAGLE MT DITCH	1	3
56-0113L	IROLO DITCH	1	3
56-0113R	IROLO DITCH	1	3
56-0112L	AJAX DITCH	1	3
56-0112R	AJAX DITCH	1	3
56-0111L	SHANTY DITCH	1	3
56-0111R	SHANTY DITCH	1	3
56-0109L	UNION DITCH	1	3
56-0109R	UNION DITCH	1	3
56-0105L	BULA DITCH	1	3
56-0105R	BULA DITCH	1	3
56-0104L	TARO DITCH	1	3
56-0104R	TARO DITCH	1	3

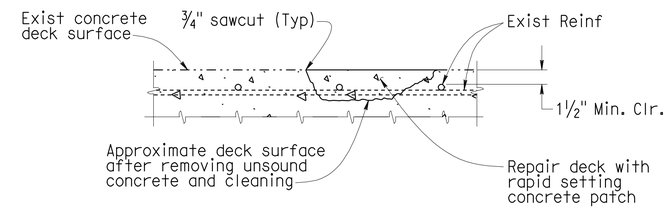

DECK REPAIR DETAIL

Reinforcement may be encountered during deck concrete removal.

NO SCALE

NOTE:
THE CONTRACTOR SHALL VERIFY ALL CONTROLLING FIELD DIMENSIONS BEFORE ORDERING OR FABRICATING ANY MATERIAL.

DESIGN	BY M. Furlong	CHECKED D. Acoba	
DETAILS	BY N. Kelley	CHECKED D. Acoba	
QUANTITIES	BY M. Furlong	CHECKED D. Acoba	

STATE OF CALIFORNIA
DEPARTMENT OF TRANSPORTATION

DIVISION OF MAINTENANCE
STRUCTURE MAINTENANCE DESIGN

BRIDGE NO. Varies
POST MILE Various

ROUTE 10 BRIDGES
QUANTITIES AND DETAILS

STRUCTURES MAINTENANCE GENERAL PLAN & DETAIL SHEET (ENGLISH) (REV. 10/17/07)

ORIGINAL SCALE IN INCHES FOR REDUCED PLANS 0 1 2 3

CU 08608
EA 0K6811

DISREGARD PRINTS BEARING EARLIER REVISION DATES → REVISION DATES 10-3-08 10-20-08 4-22-09 5-14-09

SHEET 5 OF 5

FILE => 08_0k6811_edet.dgn

USERNAME => trrichf DATE PLOTTED => 03-NOV-2009 TIME PLOTTED => 09:33