ACIM-040-1(079)73E

Dist	COUNTY	ROUTE	POST MILES TOTAL PROJECT	SHEET No.	TOTAL SHEETS
08	SBd	40	R73.0/R89.0	1	36

STATE OF CALIFORNIA

DEPARTMENT OF TRANSPORTATION

PROJECT PLANS FOR CONSTRUCTION ON

STATE HIGHWAY

IN SAN BERNARDINO COUNTY
NEAR LUDLOW
FROM 1.5 MILES WEST OF OLD DAD WASH
TO 1.5 MILES WEST OF FORTRESS WASH

TO BE SUPPLEMENTED BY STANDARD PLANS DATED MAY 2010

INDEX OF PLANS

SHEET No.	DESCRIPTION
1	TITLE AND LOCATION MAP
2	TYPICAL CROSS SECTIONS
3-8	CONSTRUCTION DETAILS
9	CONSTRUCTION AREA SIGNS
10	TRAFFIC HANDLING QUANTITIES
11-12	DETOUR PLAN
13	PAVEMENT DELINEATION QUANTITIES
14-17	SUMMARY OF QUANTITIES
18-36	REVISED STANDARD PLANS

THE STANDARD PLANS LIST APPLICABLE TO THIS CONTRACT IS INCLUDED IN THE NOTICE TO BIDDERS AND SPECIAL PROVISIONS BOOK.

LOCATION MAP

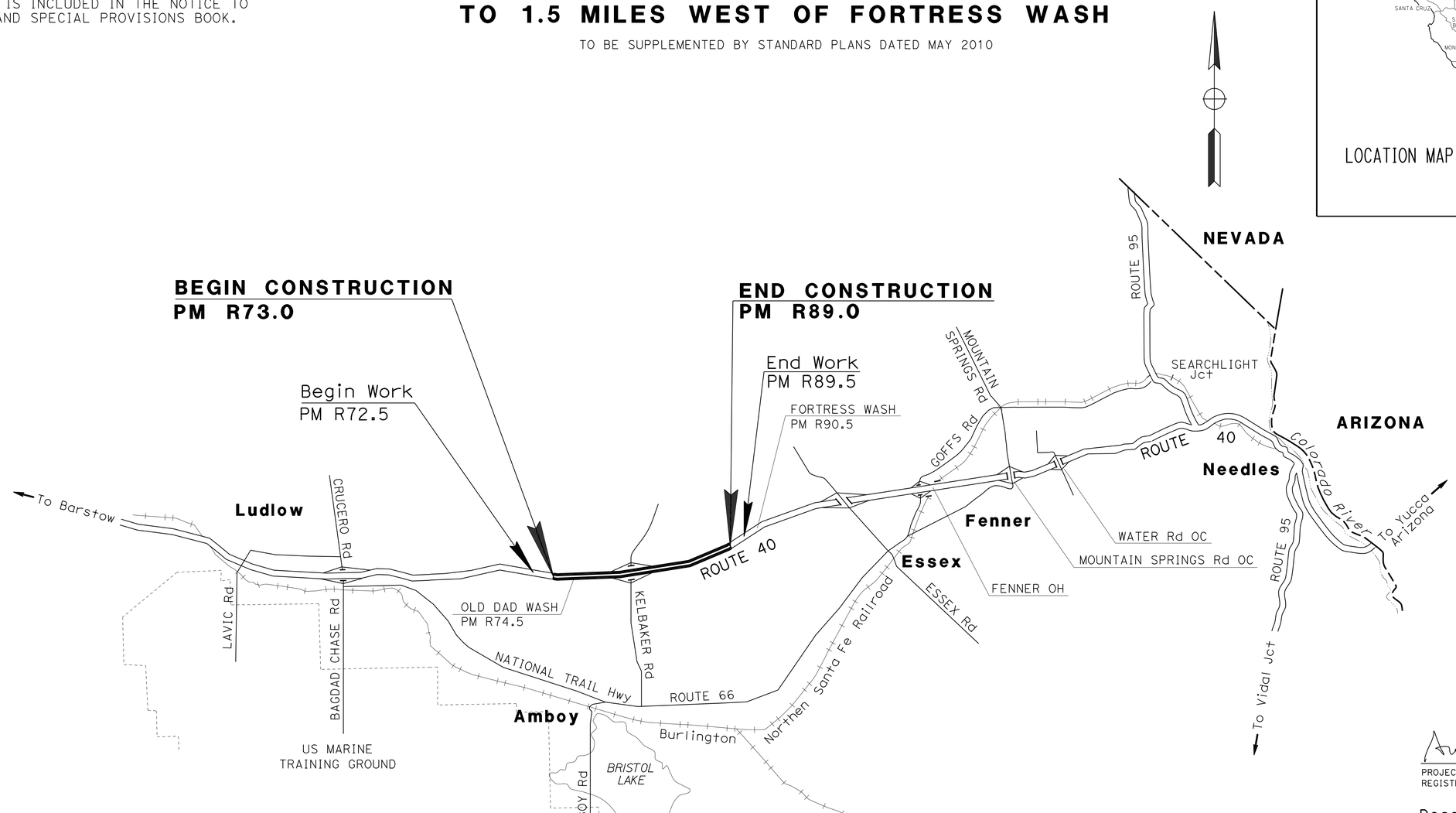

NO SCALE

THE CONTRACTOR SHALL POSSESS THE CLASS (OR CLASSES) OF LICENSE AS SPECIFIED IN THE "NOTICE TO BIDDERS."

PROJECT MANAGER: M. MOLLAZADEH

DESIGN ENGINEER: ANH PHAN

12-13-13
PROJECT ENGINEER REGISTERED CIVIL ENGINEER — DATE

REGISTERED PROFESSIONAL ENGINEER: ANH V PHAN, No. C 62294, Exp. 9-30-15, CIVIL, STATE OF CALIFORNIA

December 16, 2013
PLANS APPROVAL DATE

THE STATE OF CALIFORNIA OR ITS OFFICERS OR AGENTS SHALL NOT BE RESPONSIBLE FOR THE ACCURACY OR COMPLETENESS OF SCANNED COPIES OF THIS PLAN SHEET.

CONTRACT No.	08-0K2804
PROJECT ID	0800000338

LAST REVISION 12-13-13 | DATE PLOTTED => 13-DEC-2013 | TIME PLOTTED => 09:45

Dist	COUNTY	ROUTE	POST MILES TOTAL PROJECT	SHEET No.	TOTAL SHEETS
08	SBd	40	R73.0/R89.0	2	36

REGISTERED CIVIL ENGINEER 12-13-13 DATE

12-16-13
PLANS APPROVAL DATE

REGISTERED PROFESSIONAL ENGINEER ANH V PHAN No. 62294 Exp. 9-30-15 CIVIL STATE OF CALIFORNIA

THE STATE OF CALIFORNIA OR ITS OFFICERS OR AGENTS SHALL NOT BE RESPONSIBLE FOR THE ACCURACY OR COMPLETENESS OF SCANNED COPIES OF THIS PLAN SHEET.

NOTES:

1. DIMENSIONS OF STRUCTURAL SECTIONS ARE SUBJECT TO TOLERANCES SPECIFIED IN THE STANDARD SPECIFICATIONS.
2. SUPERELEVATION AS SHOWN OR AS DIRECTED BY THE ENGINEER.
3. COLD PLANE TO BE 0.35′ AND HMA TO BE 0.45′ AT ONLY THOSE LOCATIONS SHOWN ON SHEET Q-1.
4. SEE 2010 STD PLAN A40B FOR SHOULDER RUMBLE STRIP (GROUND-IN INDENTATION) DETAILS.
5. SEAL COAT (RUBBERIZED) APPLIES FOR TRAVELED WAY ONLY.
6. NO COLD PLANING, SEAL COAT (RUBBERIZED), AND HMA OVERLAY ON APPROACH SLABS AND BRIDGE DECKS.
7. FOR LOCATIONS AND TYPE OF HMA DIKE SEE SHEET Q-2.

DESIGN DESIGNATION (ROUTE 40)

ADT (2010) = 12,800	D = 88%
ADT (2020) = 17,900	T = 47%
DHV = 1,540	V = 65 MPH
ESAL = 25,144,408	TI_{10} = 13.0

PAVEMENT CLIMATE REGION
DESERT

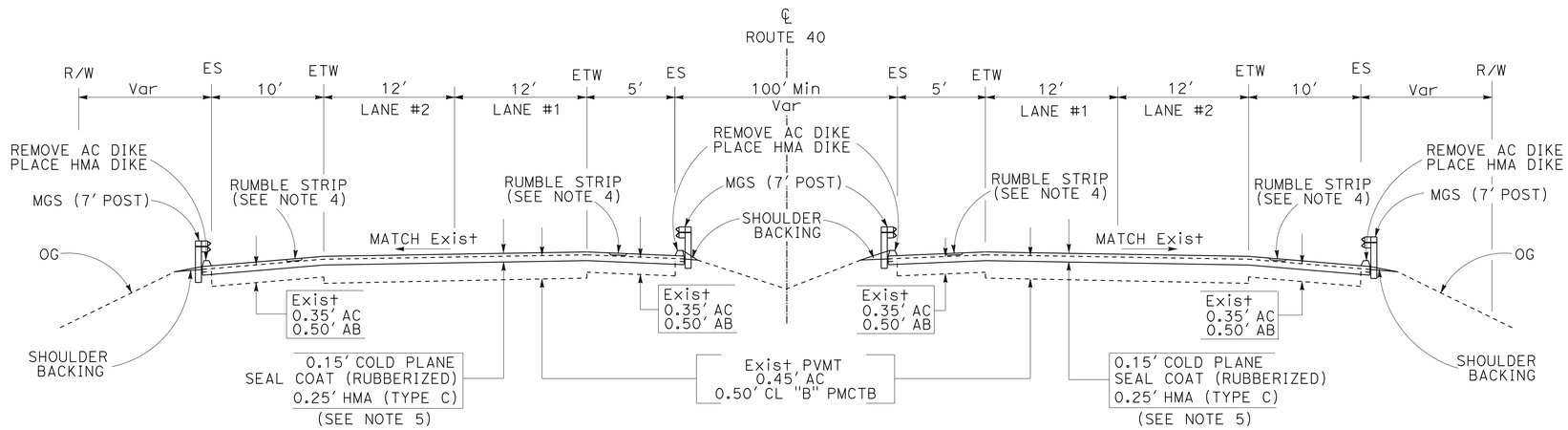

ROUTE 40
PM R73.0/R89.0

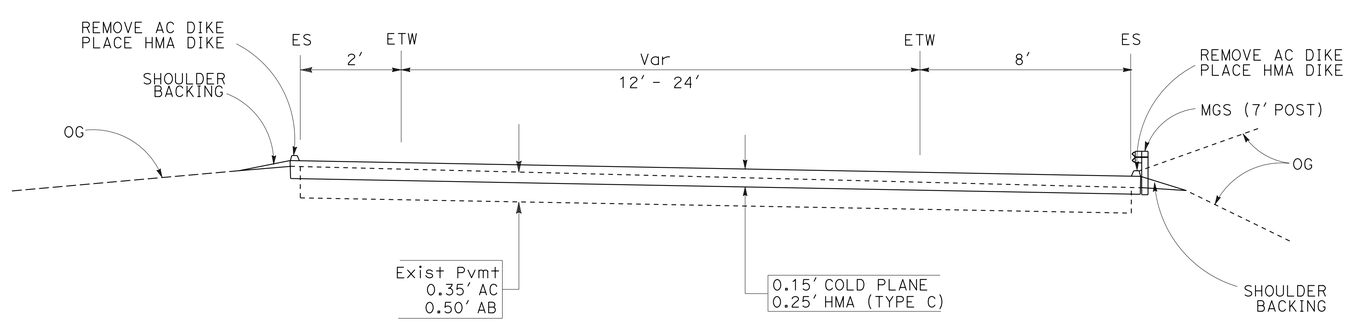

ROUTE 40
KELBAKER ROAD ENTRANCE AND EXIT RAMPS (PM R78.2)
(Typ)

EXISTING UTILITY FACILITIES HAVE NOT BEEN PLOTTED ON THESE PLANS.

TYPICAL CROSS SECTIONS
NO SCALE

X-1

STATE OF CALIFORNIA - DEPARTMENT OF TRANSPORTATION
Caltrans® DESIGN
FUNCTIONAL SUPERVISOR: RENEE SASSE
CALCULATED-DESIGNED BY: MARC CHAVOUSHI
CHECKED BY: ANH PHAN
REVISED BY
DATE REVISED

LAST REVISION 12-13-13 | DATE PLOTTED => 13-DEC-2013 | TIME PLOTTED => 09:45

Dist	COUNTY	ROUTE	POST MILES TOTAL PROJECT	SHEET No.	TOTAL SHEETS
08	SBd	40	R73.0/R89.0	3	36

REGISTERED CIVIL ENGINEER 12-13-13 DATE

12-16-13
PLANS APPROVAL DATE

REGISTERED PROFESSIONAL ENGINEER ANH V PHAN No. 62294 Exp. 9-30-15 CIVIL STATE OF CALIFORNIA

THE STATE OF CALIFORNIA OR ITS OFFICERS OR AGENTS SHALL NOT BE RESPONSIBLE FOR THE ACCURACY OR COMPLETENESS OF SCANNED COPIES OF THIS PLAN SHEET.

NOTES:

1. EXACT LOCATIONS FOR BEGIN AND END PAVEMENT CONSTRUCTION TO BE DETERMINED BY THE ENGINEER.
2. FOR PCC ANCHOR BLOCKS DETAILS SEE SHEET C-2.
3. FOR LOCATIONS, LENGTH, AND TYPE OF MIDWEST GUARDRAIL SYSTEM, SEE SHEET Q-3.
4. FOR MGS TYPICAL LAYOUTS FOR STRUCTURE APPROACH SEE RSP-A77Q1.

LEGEND:

COLD PLANE

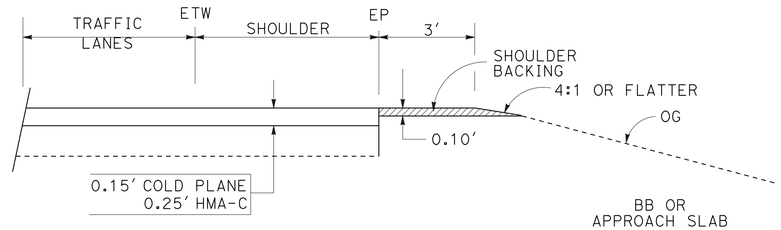

SHOULDER BACKING

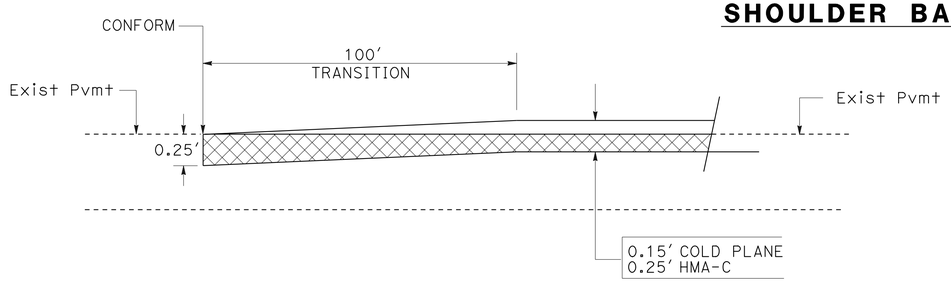

BEGIN OR END OF PAVEMENT TRANSITION

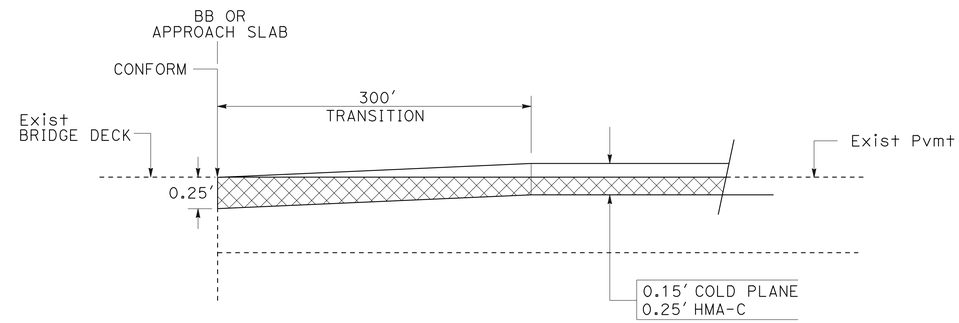

PAVEMENT CONFORM AT BEGIN - END BRIDGE

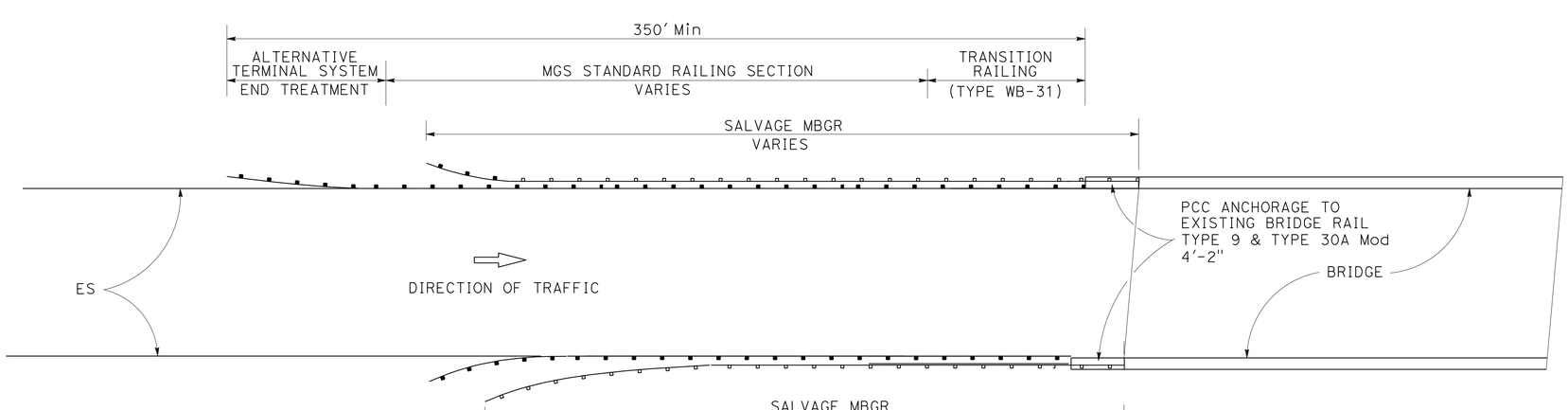

TYPICAL MGS-BRIDGE CONNECTION

CONSTRUCTION DETAILS

NO SCALE

C-1

STATE OF CALIFORNIA - DEPARTMENT OF TRANSPORTATION
Caltrans® DESIGN

FUNCTIONAL SUPERVISOR: RENEE SASSE

CALCULATED-DESIGNED BY: MARC CHAVOUSHI
CHECKED BY: ANH PHAN

REVISED BY | DATE REVISED

LAST REVISION 12-13-13 | DATE PLOTTED => 13-DEC-2013 | TIME PLOTTED => 09:45

Dist	COUNTY	ROUTE	POST MILES TOTAL PROJECT	SHEET No.	TOTAL SHEETS
08	SBd	40	R73.0/R89.0	4	36

REGISTERED CIVIL ENGINEER 12-13-13 DATE

12-16-13
PLANS APPROVAL DATE

REGISTERED PROFESSIONAL ENGINEER ANH V PHAN No. 62294 Exp. 9-30-15 CIVIL STATE OF CALIFORNIA

THE STATE OF CALIFORNIA OR ITS OFFICERS OR AGENTS SHALL NOT BE RESPONSIBLE FOR THE ACCURACY OR COMPLETENESS OF SCANNED COPIES OF THIS PLAN SHEET.

NOTES:

1. CONTRACTOR SHALL VERIFY DIMENSIONS IN THE FIELD BEFORE FABRICATING ANY END CONNECTION TO CONFORM WITH EXISTING PAVED CONDITIONS.
2. ALL PLATES, NUTS, WASHERS AND BOLTS TO BE GALVANIZED.
3. TAPER THE TOP OF THE END OF THE BRIDGE RAILING AT 4:1 TO MATCH THE TOP ELEVATION OF THE THRIE BEAM RAIL ELEMENT.
4. FOR TRANSITION RAILING (TYPE WB-31) DETAILS, SEE 2010 REVISED STANDARD PLAN SHEET RSP A77U4.
5. SEE SHEET Q-3 FOR BRIDGE LOCATIONS AND BRIDGE RAILING TYPES.

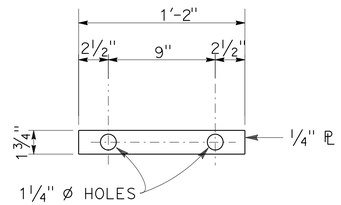

DETAIL H

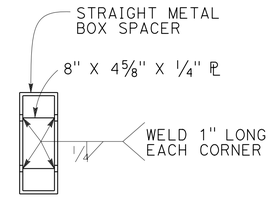

VIEW F-F

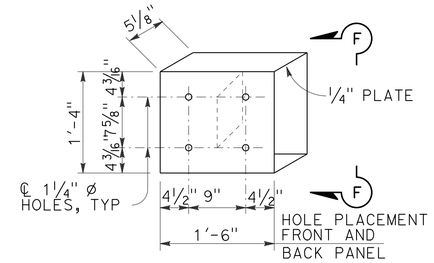

DETAIL E

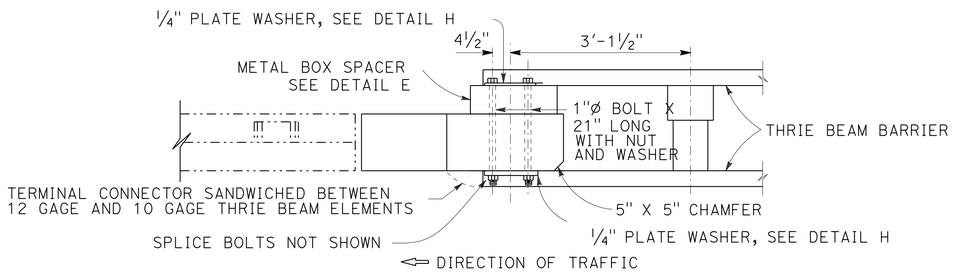

PLAN

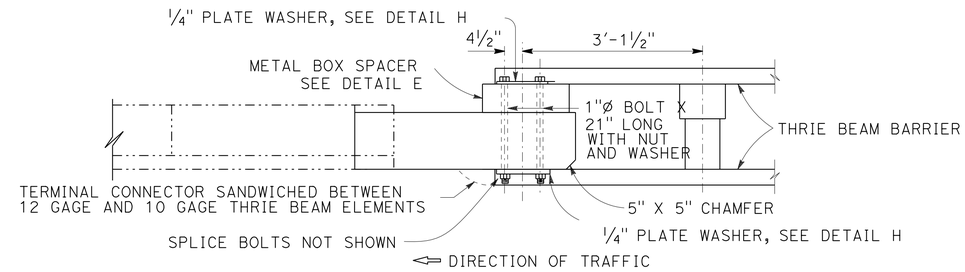

PLAN

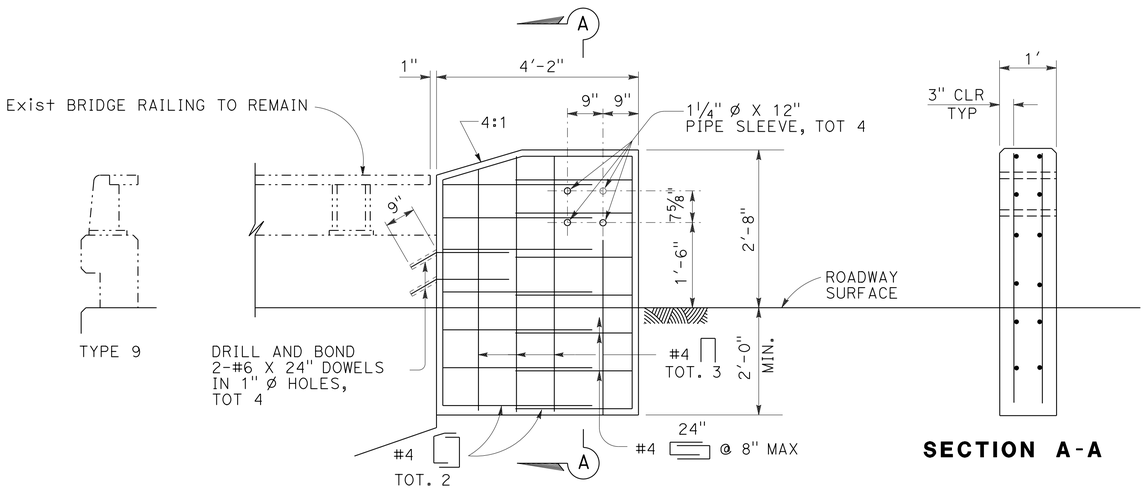

SECTION A-A

ELEVATION
PCC ANCHORAGE BLOCK DETAILS
FOR TRANSITION RAILING TO EXISTING BRIDGE RAILING TYPE 9

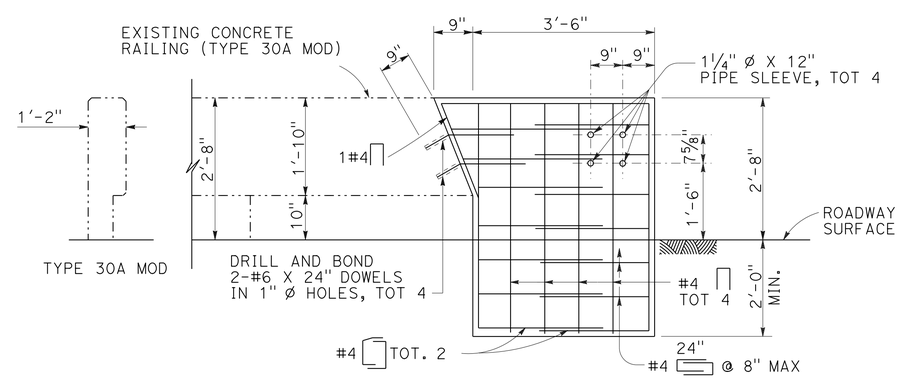

ELEVATION
PCC ANCHORAGE BLOCK DETAILS
FOR TRANSITION RAILING TO
EXISTING BRIDGE RAILING TYPE 30A MOD (CONCRETE)

CONSTRUCTION DETAILS

NO SCALE

C-2

STATE OF CALIFORNIA - DEPARTMENT OF TRANSPORTATION
Caltrans® DESIGN
FUNCTIONAL SUPERVISOR: RENEE SASSE
CALCULATED-DESIGNED BY: MARC CHAVOUSHI
CHECKED BY: ANH PHAN
REVISED BY / DATE REVISED

LAST REVISION 12-13-13
DATE PLOTTED => 13-DEC-2013
TIME PLOTTED => 09:46

Dist	COUNTY	ROUTE	POST MILES TOTAL PROJECT	SHEET No.	TOTAL SHEETS
08	SBd	40	R73.0/R89.0	5	36

REGISTERED CIVIL ENGINEER 12-13-13 DATE

12-16-13
PLANS APPROVAL DATE

REGISTERED PROFESSIONAL ENGINEER ANH V PHAN No. 62294 Exp. 9-30-15 CIVIL STATE OF CALIFORNIA

THE STATE OF CALIFORNIA OR ITS OFFICERS OR AGENTS SHALL NOT BE RESPONSIBLE FOR THE ACCURACY OR COMPLETENESS OF SCANNED COPIES OF THIS PLAN SHEET.

NOTE:

1. SEE QUANTITY SHEET Q-2 FOR LOCATIONS OF HMA OVERSIDE DRAINS AND HMA DIKES.

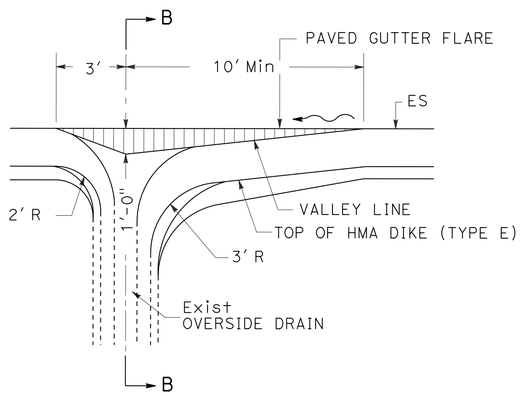

PLAN

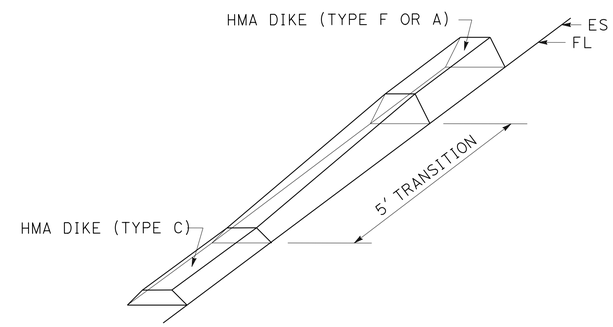

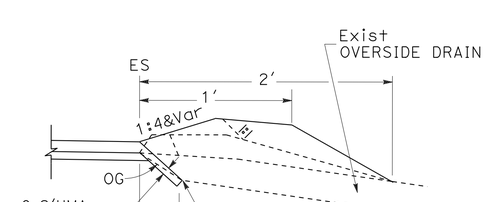

SECTION B-B

MODIFY OVERSIDE DRAIN

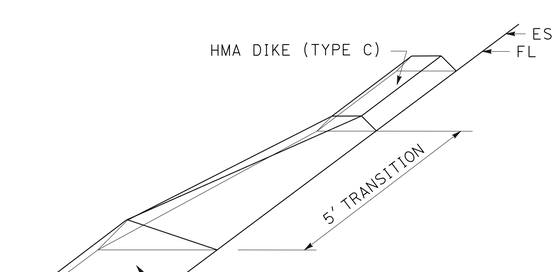

HMA DIKE TRANSITION

CONSTRUCTION DETAILS

NO SCALE

C-3

STATE OF CALIFORNIA - DEPARTMENT OF TRANSPORTATION
Caltrans® DESIGN

FUNCTIONAL SUPERVISOR: RENEE SASSE
CALCULATED-DESIGNED BY: MARC CHAVOUSHI
CHECKED BY: ANH PHAN
REVISED BY
DATE REVISED

LAST REVISION 12-13-13 | DATE PLOTTED => 13-DEC-2013 | TIME PLOTTED => 09:46

Dist	COUNTY	ROUTE	POST MILES TOTAL PROJECT	SHEET No.	TOTAL SHEETS
08	SBd	40	R73.0/R89.0	6	36

REGISTERED CIVIL ENGINEER 12-13-13 DATE

12-16-13
PLANS APPROVAL DATE

REGISTERED PROFESSIONAL ENGINEER ANH V PHAN No. 62294 Exp. 9-30-15 CIVIL STATE OF CALIFORNIA

THE STATE OF CALIFORNIA OR ITS OFFICERS OR AGENTS SHALL NOT BE RESPONSIBLE FOR THE ACCURACY OR COMPLETENESS OF SCANNED COPIES OF THIS PLAN SHEET.

NOTES:

1. SEE QUANTITY SHEET Q-3 FOR LOCATIONS OF MIDWEST GUARDRAIL SYSTEM.
2. USE CASE 1 OR CASE 2 WHEN ONE POST IS OMITTED.
3. USE CASE 3 WHEN TWO POSTS ARE OMITTED.
4. FOR OTHER DETAILS, SEE 2010 REVISED STANDARD PLANS RSP A77L1, RSP A77M1, RSP A77N1, RSP A77N3, AND RSP A77N4.
5. DIRECTION OF TRAFFIC INDICATED BY ←

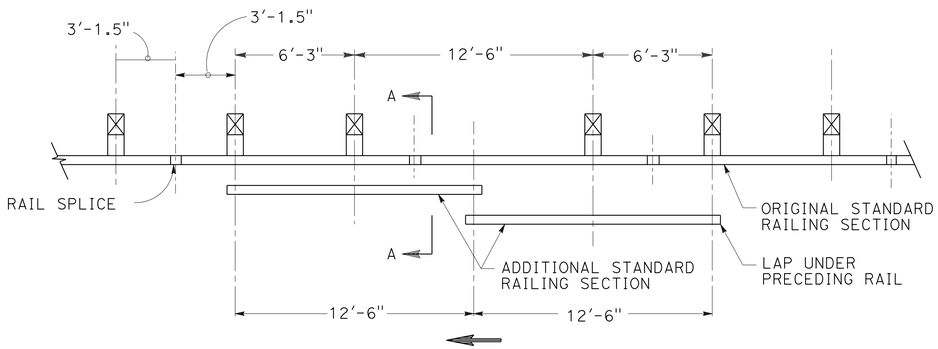

CASE 1

ONE POST OMITTED (SPLICE AT POSTS)

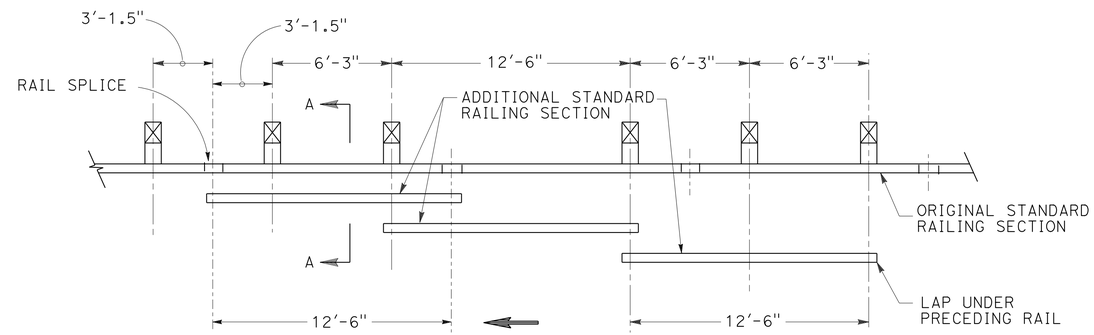

CASE 2

ONE POST OMITTED (SPLICE AT POSTS)

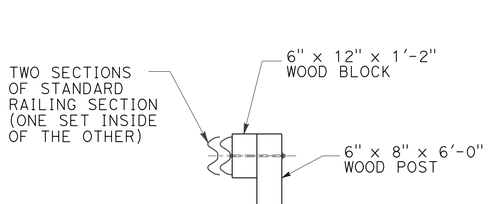

SECTION A-A

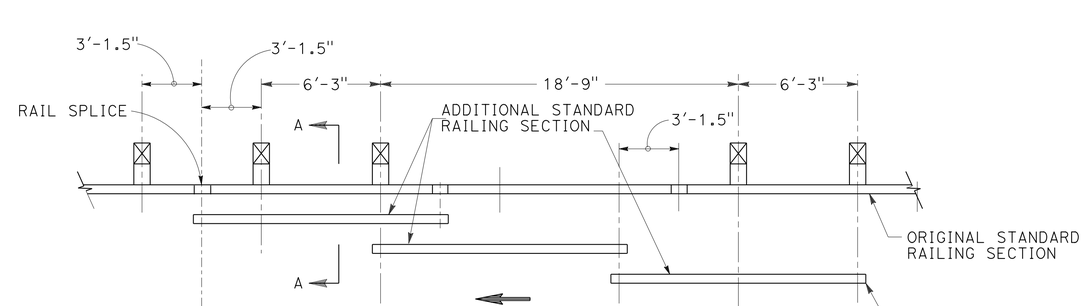

CASE 3

TWO POSTS OMITTED

LONG SPAN NESTED STANDARD RAILING SECTION

EXISTING UTILITY FACILITIES HAVE NOT BEEN PLOTTED ON THESE PLANS.

CONSTRUCTION DETAILS

NO SCALE

C-4

STATE OF CALIFORNIA - DEPARTMENT OF TRANSPORTATION
Caltrans® DESIGN
FUNCTIONAL SUPERVISOR RENEE SASSE
CALCULATED-DESIGNED BY MARC CHAVOUSHI
CHECKED BY ANH PHAN
REVISED BY
DATE REVISED

LAST REVISION 12-13-13
DATE PLOTTED => 13-DEC-2013
TIME PLOTTED => 09:46

Dist	COUNTY	ROUTE	POST MILES TOTAL PROJECT	SHEET No.	TOTAL SHEETS
08	SBd	40	R73.0/R89.0	7	36

REGISTERED CIVIL ENGINEER 12-13-13 DATE

12-16-13
PLANS APPROVAL DATE

REGISTERED PROFESSIONAL ENGINEER
ANH V PHAN
No. 62294
Exp. 9-30-15
CIVIL
STATE OF CALIFORNIA

THE STATE OF CALIFORNIA OR ITS OFFICERS OR AGENTS SHALL NOT BE RESPONSIBLE FOR THE ACCURACY OR COMPLETENESS OF SCANNED COPIES OF THIS PLAN SHEET.

LEGEND:

- DIRECTION OF TRAFFIC
- LIMIT OF PLACING HMA
- RUMBLE STRIP

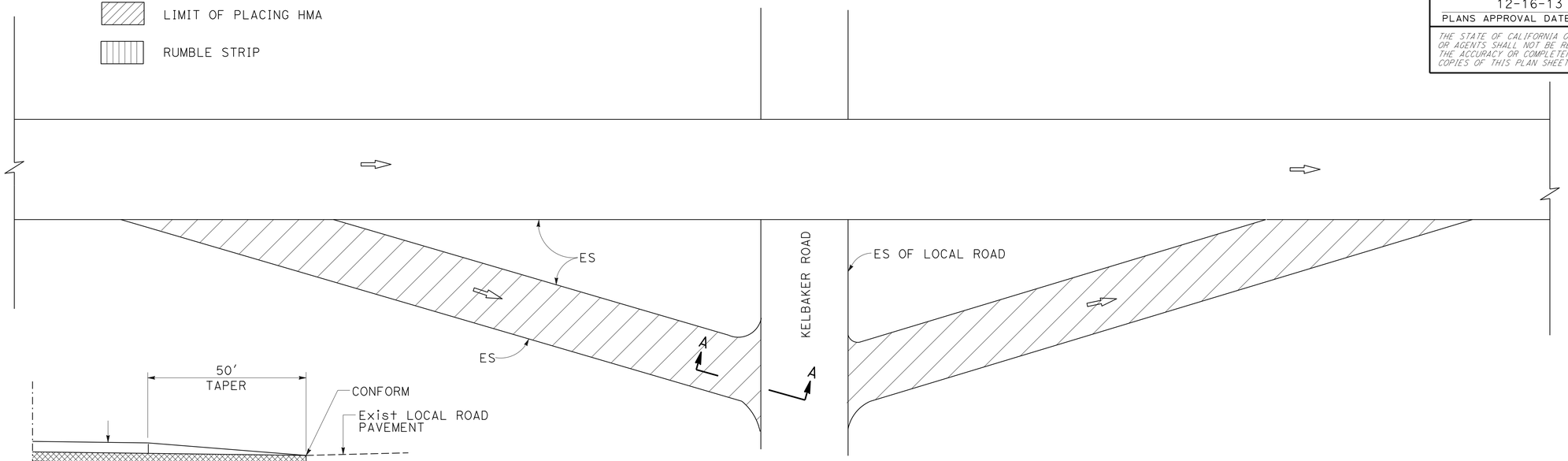

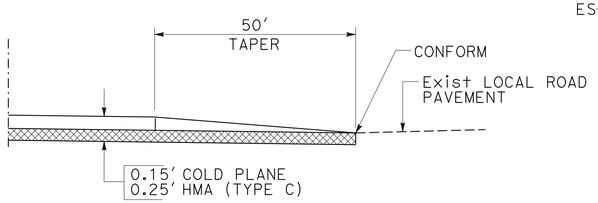

SECTION A-A

KELBAKER ROAD HMA CONFORM DETAIL

TYPICAL LIMIT OF PLACING HMA AT RAMPS

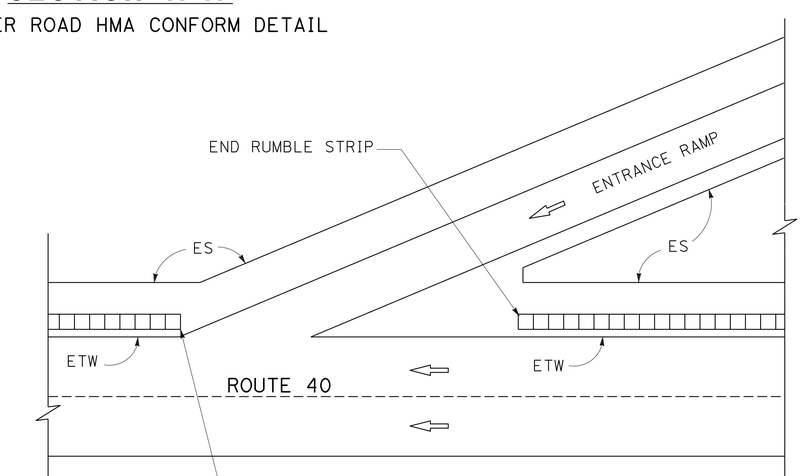

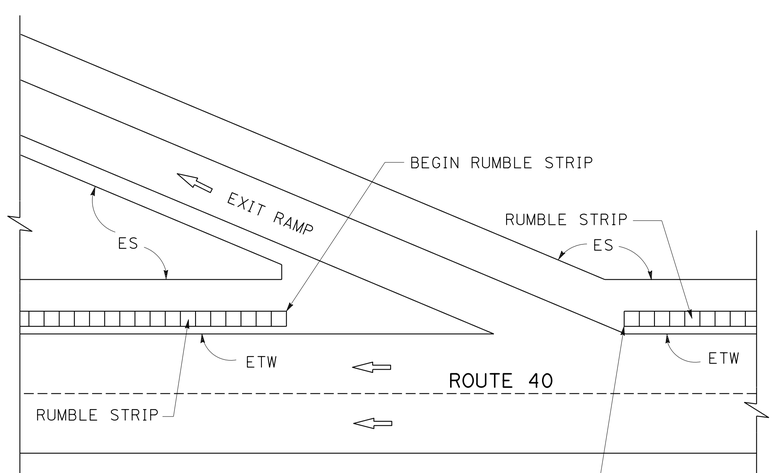

TYPICAL LIMIT OF RUMBLE STRIP AT RAMPS

ROUTE 40

CONSTRUCTION DETAILS

NO SCALE

C-5

STATE OF CALIFORNIA - DEPARTMENT OF TRANSPORTATION
Caltrans
DESIGN

FUNCTIONAL SUPERVISOR: RENEE SASSE
CALCULATED-DESIGNED BY: MARC CHAVOUSHI
CHECKED BY: ANH PHAN
REVISED BY
DATE REVISED

LAST REVISION 12-13-13
DATE PLOTTED => 13-DEC-2013
TIME PLOTTED => 09:46

Dist	COUNTY	ROUTE	POST MILES TOTAL PROJECT	SHEET No.	TOTAL SHEETS
08	SBd	40	R73.0/R89.0	8	36

REGISTERED CIVIL ENGINEER 12-13-13 DATE

12-16-13
PLANS APPROVAL DATE

REGISTERED PROFESSIONAL ENGINEER ANH V PHAN No. 62294 Exp 9-30-15 CIVIL STATE OF CALIFORNIA

THE STATE OF CALIFORNIA OR ITS OFFICERS OR AGENTS SHALL NOT BE RESPONSIBLE FOR THE ACCURACY OR COMPLETENESS OF SCANNED COPIES OF THIS PLAN SHEET.

NOTE:
EXACT LOCATIONS FOR TEMPORARY FENCE (TYPE DESERT TORTOISE) WILL BE DETERMINED BY THE ENGINEER.

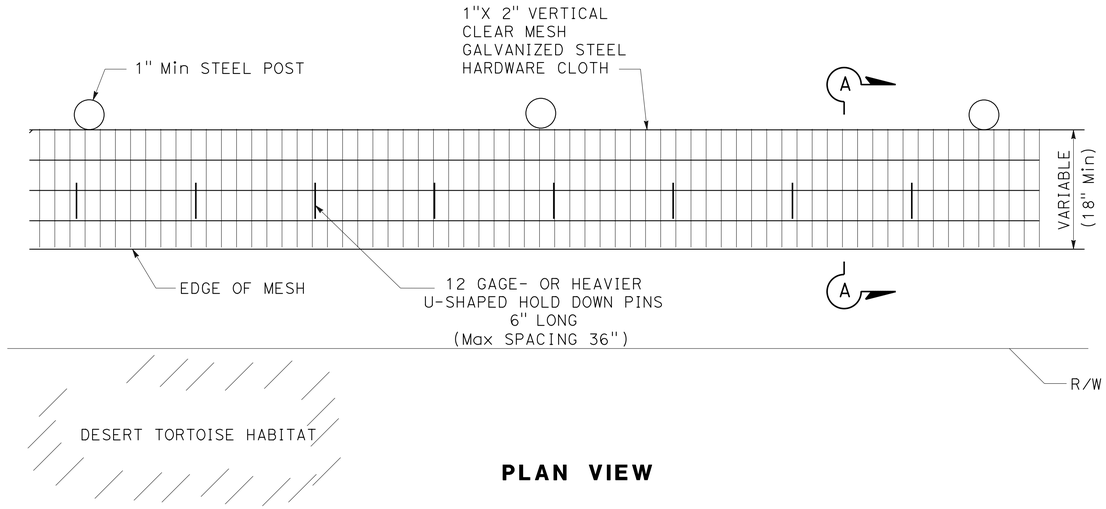

PLAN VIEW

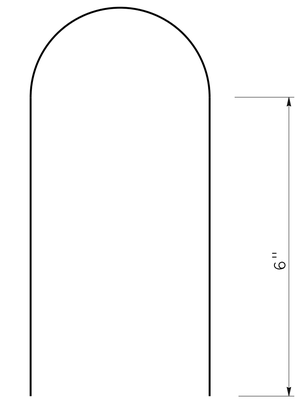

12 GAGE- OR HEAVIER U-SHAPED HOLD DOWN PINS 6" LONG (Max SPACING 36")

PIN DETAIL

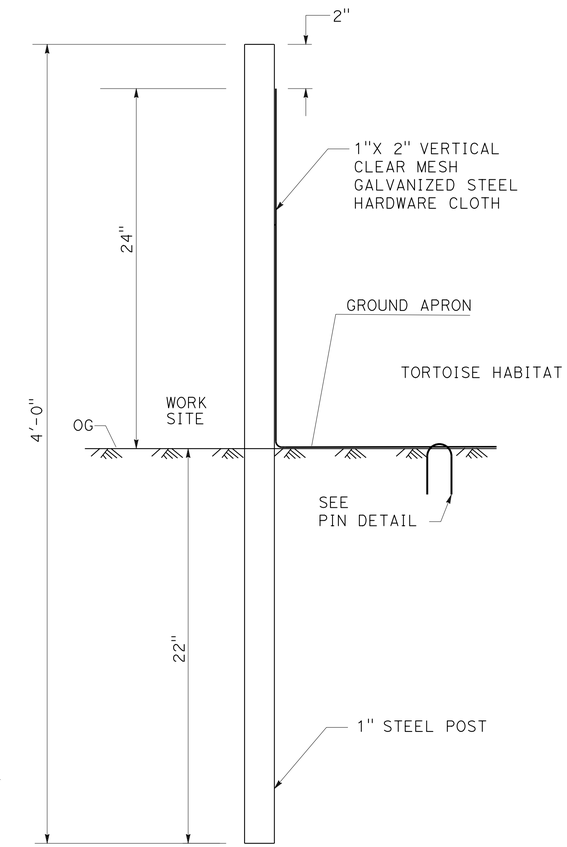

SECTION A-A

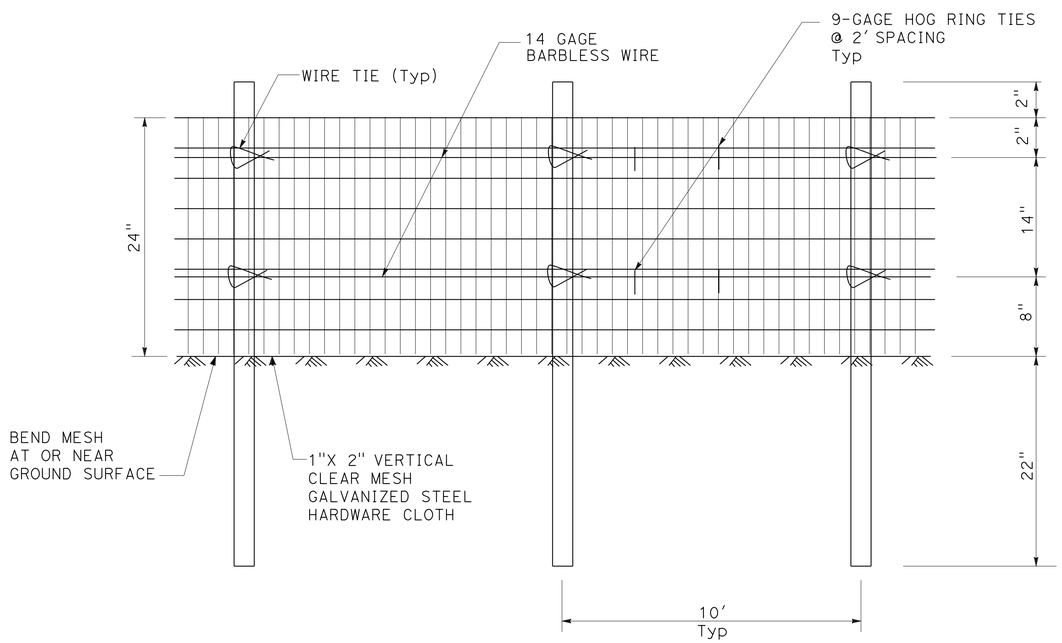

FRONT VIEW

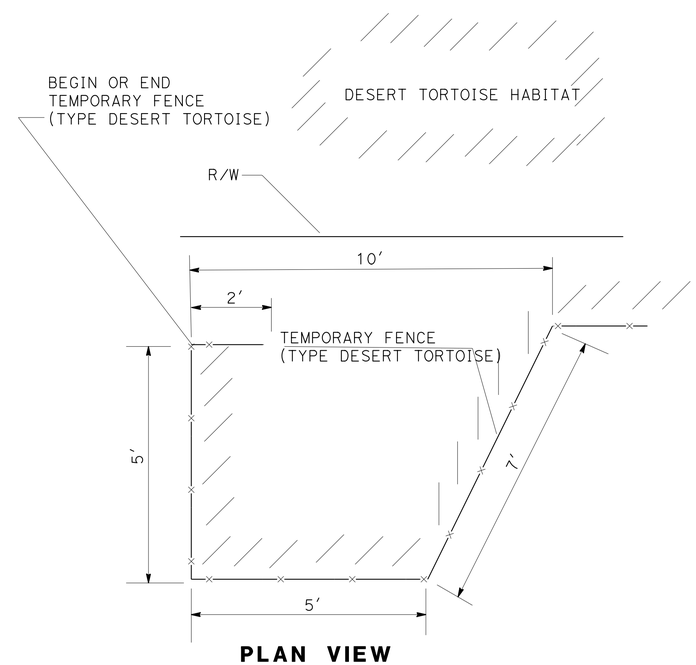

PLAN VIEW
REDIRECTIONAL CONFIGURATION

TEMPORARY FENCE (TYPE DESERT TORTOISE)

CONSTRUCTION DETAILS

NO SCALE

C-6

STATE OF CALIFORNIA - DEPARTMENT OF TRANSPORTATION
Caltrans® DESIGN
FUNCTIONAL SUPERVISOR: RENEE SASSE
CALCULATED-DESIGNED BY: MARC CHAVOUSHI
CHECKED BY: ANH PHAN
REVISED BY
DATE REVISED

LAST REVISION 12-13-13
DATE PLOTTED => 13-DEC-2013
TIME PLOTTED => 09:46

Dist	COUNTY	ROUTE	POST MILES TOTAL PROJECT	SHEET No.	TOTAL SHEETS
08	SBd	40	R73.0/R89.0	9	36

Thanh Trinh 12-13-13
REGISTERED CIVIL ENGINEER DATE

12-16-13
PLANS APPROVAL DATE

REGISTERED PROFESSIONAL ENGINEER T. TRINH No. C41189 Exp. 3-31-15 CIVIL STATE OF CALIFORNIA

THE STATE OF CALIFORNIA OR ITS OFFICERS OR AGENTS SHALL NOT BE RESPONSIBLE FOR THE ACCURACY OR COMPLETENESS OF SCANNED COPIES OF THIS PLAN SHEET.

NOTES:

1. CONSTRUCTION AREA SIGN LOCATIONS SHOWN ARE APPROXIMATE.
2. USE STANDARD PLANS T10 FOR ROUTE 40, AND T14 FOR RAMP FOR TRAFFIC HANDLING.
3. EXACT MESSAGE AND LOCATIONS OF PORTABLE CHANGE MESSAGE SIGN (PCMS) TO BE DETERMINED BY THE ENGINEER.

LEGEND:

- WORK AREA
- CONSTRUCTION AREA SIGN (ONE POST)
- CONSTRUCTION AREA SIGN (TWO POST)
- (X) CONSTRUCTION AREA SIGN LETTER

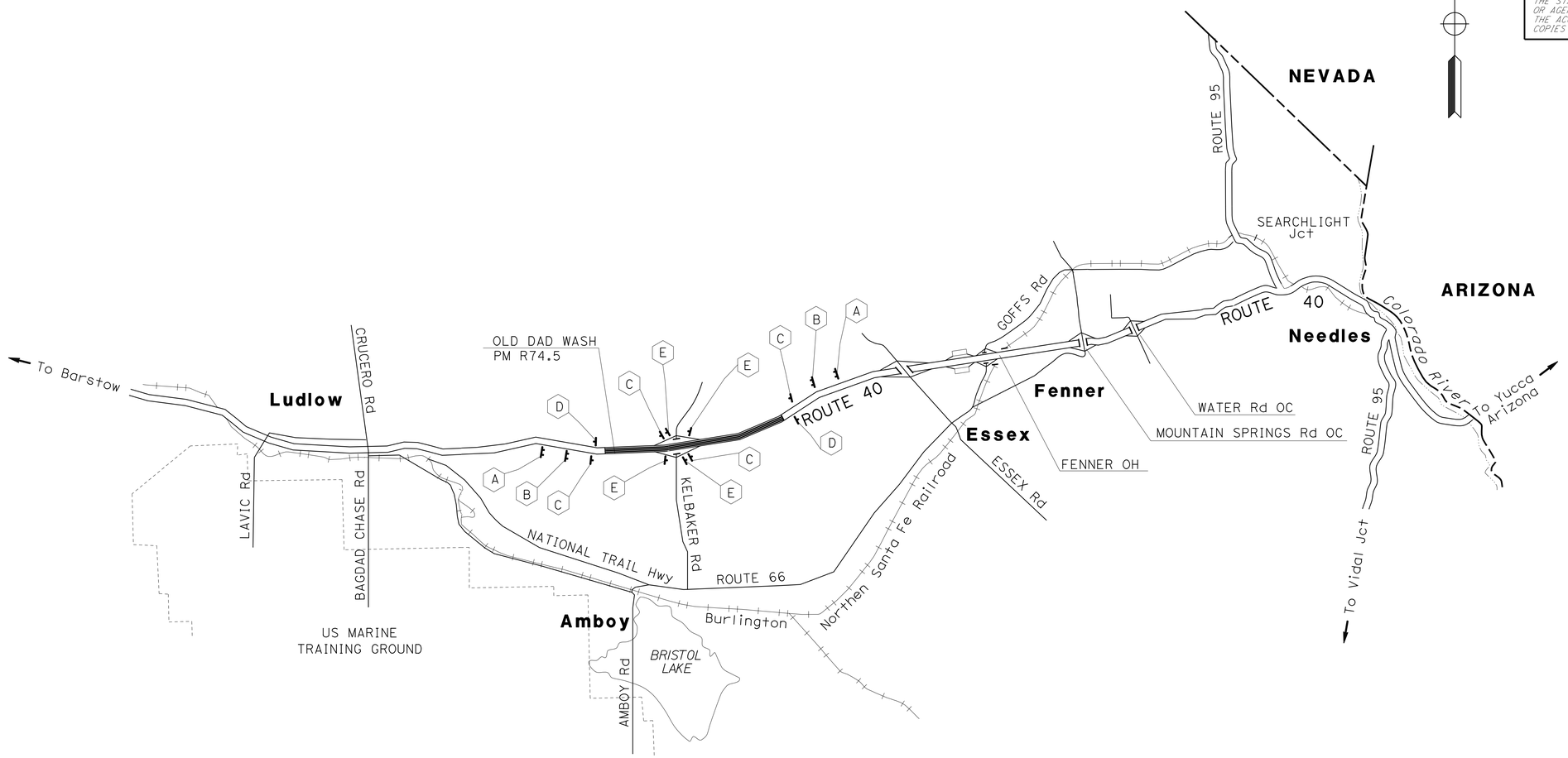

STATIONARY MOUNTED CONSTRUCTION AREA SIGNS

SIGN No. (X)	SIGN CODE FEDERAL	SIGN CODE CALIFORNIA	PANEL SIZE	SIGN MESSAGE	NUMBER OF POSTS AND SIZE	NUMBER OF SIGNS
A		C40(CA)	144" x 60"	TRAFFIC FINES DOUBLED IN CONSTRUCTION ZONES	2 - 6" x 8"	2
B	G20-1		90" x 48"	ROAD WORK NEXT 16 MILES	2 - 4" x 4"	2
C	W20-1		48" x 48"	ROAD WORK AHEAD	1 - 6" x 6"	4
D	G20-2		48" x 24"	END ROAD WORK	1 - 4" x 6"	2
E		SC6-4(CA)	48" x 60"	RAMP CLOSED	1 - 6" x 6"	4

PORTABLE CHANGEABLE MESSAGE SIGNS (PCMS)

(EA)
4

APPROVED FOR CONSTRUCTION AREA SIGN WORK ONLY

CONSTRUCTION AREA SIGNS

NO SCALE

CS-1

STATE OF CALIFORNIA - DEPARTMENT OF TRANSPORTATION
Caltrans® TRAFFIC DESIGN

FUNCTIONAL SUPERVISOR: BILL WASSER
CALCULATED-DESIGNED BY: KEVIN NGUYEN
CHECKED BY: THANH TRINH
REVISED BY
DATE REVISED

LAST REVISION 12-13-13
DATE PLOTTED => 13-DEC-2013
TIME PLOTTED => 09:46

Dist	COUNTY	ROUTE	POST MILES TOTAL PROJECT	SHEET No.	TOTAL SHEETS
08	SBd	40	R73.0/R89.0	10	36

Thanh Trinh 12-13-13
REGISTERED CIVIL ENGINEER DATE

12-16-13
PLANS APPROVAL DATE

REGISTERED PROFESSIONAL ENGINEER
T. TRINH
No. C41189
Exp. 3-31-15
CIVIL
STATE OF CALIFORNIA

THE STATE OF CALIFORNIA OR ITS OFFICERS OR AGENTS SHALL NOT BE RESPONSIBLE FOR THE ACCURACY OR COMPLETENESS OF SCANNED COPIES OF THIS PLAN SHEET.

TEMPORARY PAVEMENT DELINEATION

LOCATION	TRAFFIC STRIPE DETAIL No./ PAVEMENT MARKING	(N) LENGTH	PAINT PAVEMENT MARKING	PAINT TRAFFIC STRIPE 4" YELLOW	PAINT TRAFFIC STRIPE 4" WHITE	PAINT TRAFFIC STRIPE 8" WHITE	REMARKS
		LF	SQFT	LF			
PM R73.0 TO PM R89.0 (EASTBOUND)	8	300			300		PM R78.2 (KELBAKER Rd ENTRANCE RAMP)
	11	84480			84480		REPLACE DETAIL 13M
	24	84480		84480			REPLACE DETAIL 25
	24	2780		2780			REPLACE DETAIL 25A @ KELBAKER Rd RAMPS
	27B	89608			89608		
	38A	865				865	REPLACE DETAILS 36 & 36A @ KELBAKER Rd RAMPS
	LIMIT LINE (1'-0" WHITE LINE)		60				PM R78.2 (KELBAKER Rd EXIT RAMP)
	"STOP"		44				PM R78.2 (KELBAKER Rd EXIT RAMP)
	"AHEAD"		31				PM R78.2 (KELBAKER Rd EXIT RAMP)
	TYPE I (18'-0") ARROW		25				PM R78.2 (KELBAKER Rd EXIT RAMP)
	TYPE V ARROW		66				PM R78.2 (KELBAKER Rd EXIT RAMP)
PM R73.0 TO PM R89.0 (WESTBOUND)	8	300			300		PM R78.2 (KELBAKER Rd ENTRANCE RAMP)
	11	84480			84480		REPLACE DETAIL 13M
	24	84480		84480			REPLACE DETAIL 25
	24	2780		2780			REPLACE DETAIL 25A @ KELBAKER Rd RAMPS
	27B	89608			89608		
	38A	865				865	REPLACE DETAILS 36 & 36A @ KELBAKER Rd RAMPS
	LIMIT LINE (1'-0" WHITE LINE)		60				PM R78.2 (KELBAKER Rd EXIT RAMP)
	"STOP"		44				PM R78.2 (KELBAKER Rd EXIT RAMP)
	"AHEAD"		31				PM R78.2 (KELBAKER Rd EXIT RAMP)
	TYPE I (18'-0") ARROW		25				PM R78.2 (KELBAKER Rd ENTRANCE RAMP)
	TYPE V ARROW		66				PM R78.2 (KELBAKER Rd EXIT RAMP)
SUBTOTAL			452	174520	348776	1730	
TOTAL			452	525026			

(N) - NOT A SEPARATE PAY ITEM, FOR INFORMATION ONLY

TRAFFIC HANDLING QUANTITIES

THQ-1

STATE OF CALIFORNIA - DEPARTMENT OF TRANSPORTATION
Caltrans® TRAFFIC DESIGN

FUNCTIONAL SUPERVISOR: BILL WASSER
CALCULATED-DESIGNED BY: KEVIN NGUYEN
CHECKED BY: THANH TRINH
REVISED BY
DATE REVISED

LAST REVISION 12-13-13
DATE PLOTTED => 13-DEC-2013
TIME PLOTTED => 09:46

Dist	COUNTY	ROUTE	POST MILES TOTAL PROJECT	SHEET No.	TOTAL SHEETS
08	SBd	40	R73.0/R89.0	11	36

Thanh Trinh 12-13-13
REGISTERED CIVIL ENGINEER DATE

12-16-13
PLANS APPROVAL DATE

REGISTERED PROFESSIONAL ENGINEER
T. TRINH
No. C41189
Exp. 3-31-15
CIVIL
STATE OF CALIFORNIA

THE STATE OF CALIFORNIA OR ITS OFFICERS OR AGENTS SHALL NOT BE RESPONSIBLE FOR THE ACCURACY OR COMPLETENESS OF SCANNED COPIES OF THIS PLAN SHEET.

LEGEND:

- WORK AREA
- CONSTRUCTION AREA SIGN (ONE POST)
- CONSTRUCTION AREA SIGN (TWO POST)
- RAMP CLOSED

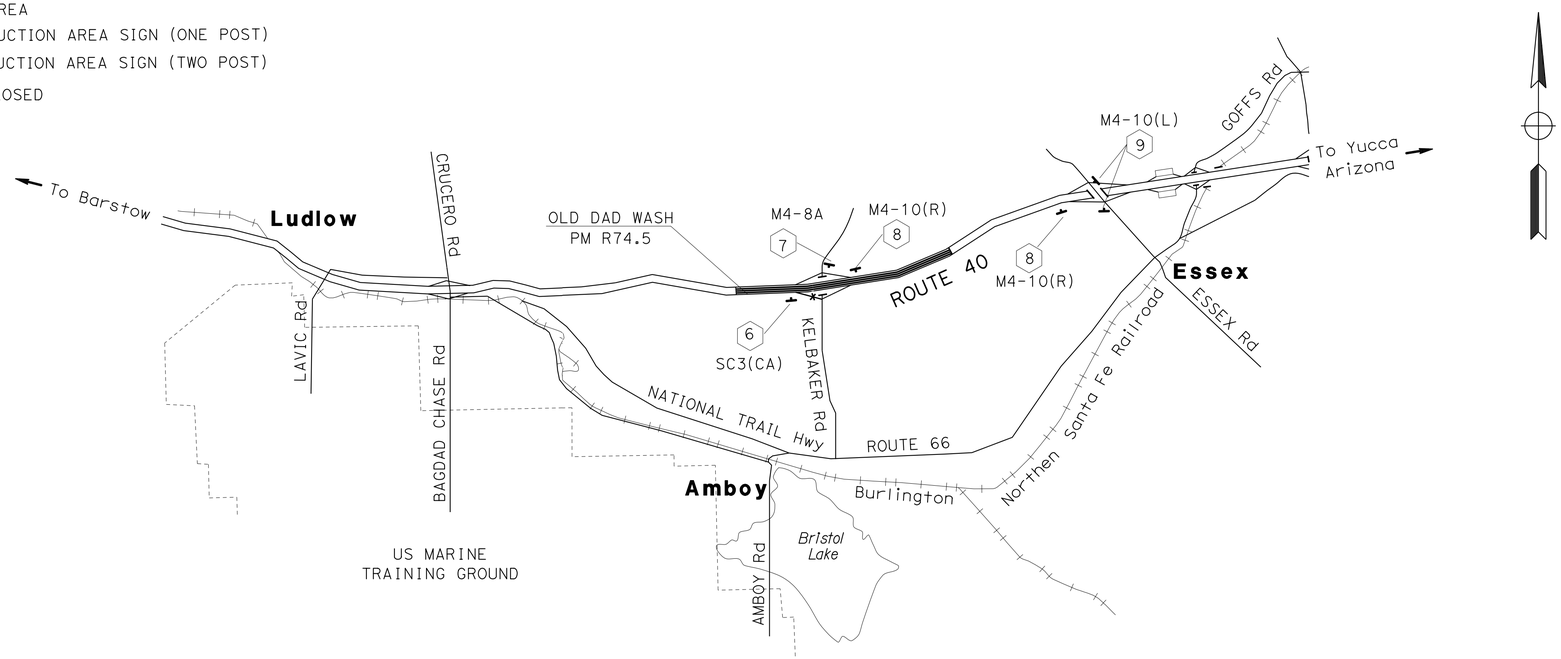

EASTBOUND EXIT RAMP CLOSURE AT KELBAKER Rd

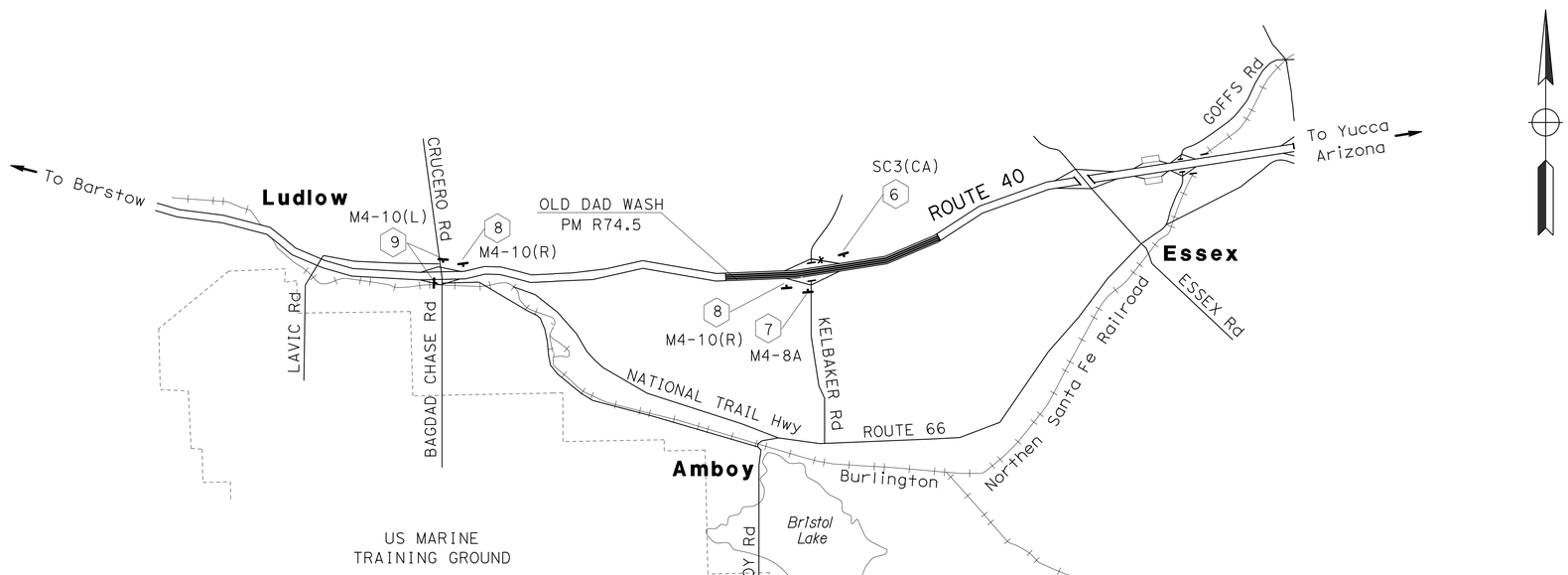

WESTBOUND EXIT RAMP CLOSURE AT KELBAKER Rd

APPROVED FOR DETOUR CONSTRUCTION WORK ONLY

DETOUR PLAN

NO SCALE

DE-1

REVISED BY	DATE REVISED
KEVIN NGUYEN	THANH TRINH
CALCULATED-DESIGNED BY	CHECKED BY
FUNCTIONAL SUPERVISOR	BILL WASSER

STATE OF CALIFORNIA - DEPARTMENT OF TRANSPORTATION
Caltrans® TRAFFIC DESIGN

LAST REVISION 12-13-13 | DATE PLOTTED => 13-DEC-2013 | TIME PLOTTED => 09:46

Dist	COUNTY	ROUTE	POST MILES TOTAL PROJECT	SHEET No.	TOTAL SHEETS
08	SBd	40	R73.0/R89.0	12	36

Thanh Trinh 12-13-13
REGISTERED CIVIL ENGINEER DATE

12-16-13
PLANS APPROVAL DATE

REGISTERED PROFESSIONAL ENGINEER
T. TRINH
No. C41189
Exp. 3-31-15
CIVIL
STATE OF CALIFORNIA

THE STATE OF CALIFORNIA OR ITS OFFICERS OR AGENTS SHALL NOT BE RESPONSIBLE FOR THE ACCURACY OR COMPLETENESS OF SCANNED COPIES OF THIS PLAN SHEET.

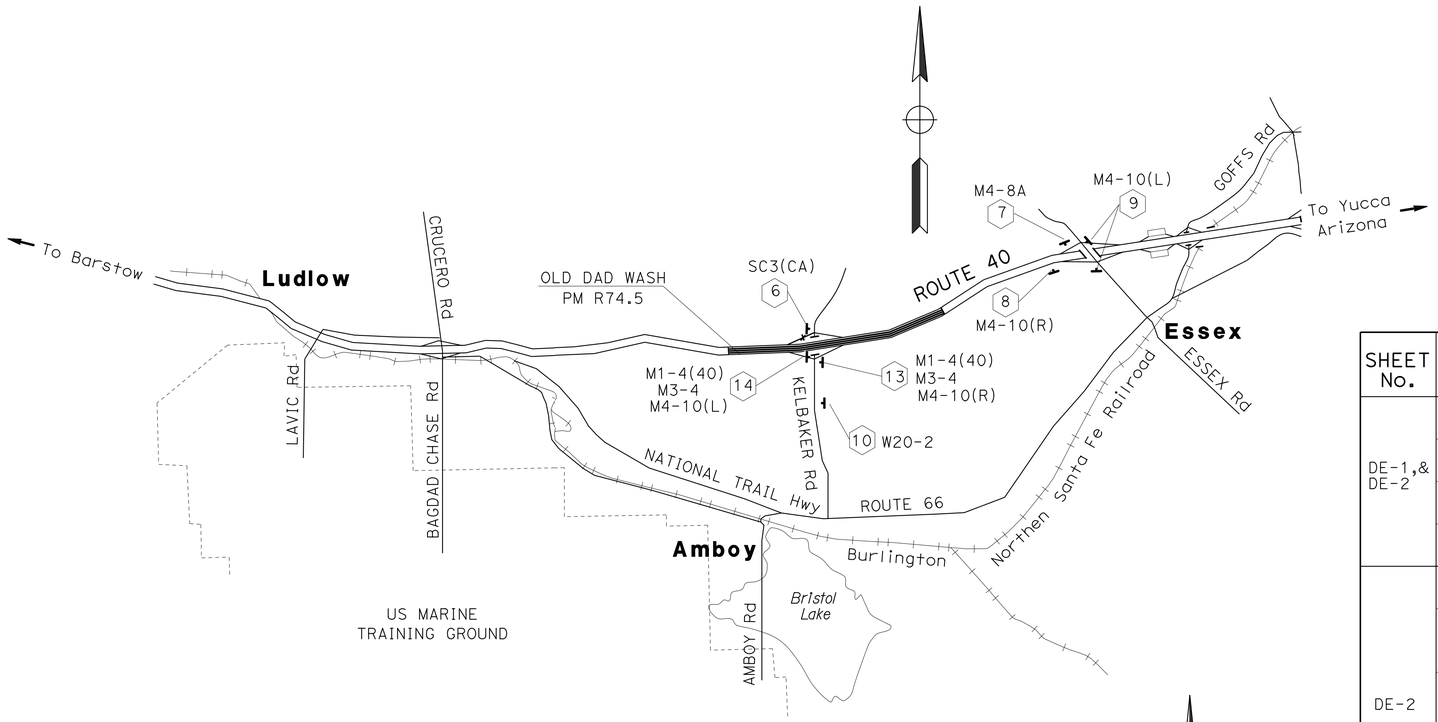

WESTBOUND ENTRANCE RAMP CLOSURE AT KELBAKER Rd

CONSTRUCTION AREA SIGNS FOR DETOUR

SHEET No.	SIGN	SIGN CODE	PANEL SIZE	SIGN MESSAGE	No. OF POST AND SIZE	No. OF SIGNS (EA)
DE-1,& DE-2	6	SC3(CA)	48" x 18"	DETOUR STRAIGHT	1 - 4" x 4"	4
	7	M4-8A	24" x 18"	END DETOUR	1 - 4" x 4"	4
	8	M4-10(R)	48" x 18"	DETOUR R†	1 - 4" x 4"	6
	9	M4-10(L)	48" x 18"	DETOUR L†	1 - 4" x 4"	8
DE-2	10	W20-2	36" x 36"	DETOUR AHEAD	1 - 4" x 6"	2
	11	M1-4(40) M3-2 M4-10(R)	24" x 24" 24" x 12" 48" x 18"	ROUTE 40 EAST DETOUR R†	1 - 4" x 6"	1
	12	M1-4(40) M3-2 M4-10(L)	24" x 24" 24" x 12" 48" x 18"	ROUTE 40 EAST DETOUR L†	1 - 4" x 6"	1
	13	M1-4(40) M3-4 M4-10(R)	24" x 24" 24" x 12" 48" x 18"	ROUTE 40 WEST DETOUR R†	1 - 4" x 6"	1
	14	M1-4(40) M3-4 M4-10(L)	24" x 24" 24" x 12" 48" x 18"	ROUTE 40 WEST DETOUR L†	1 - 4" x 6"	1

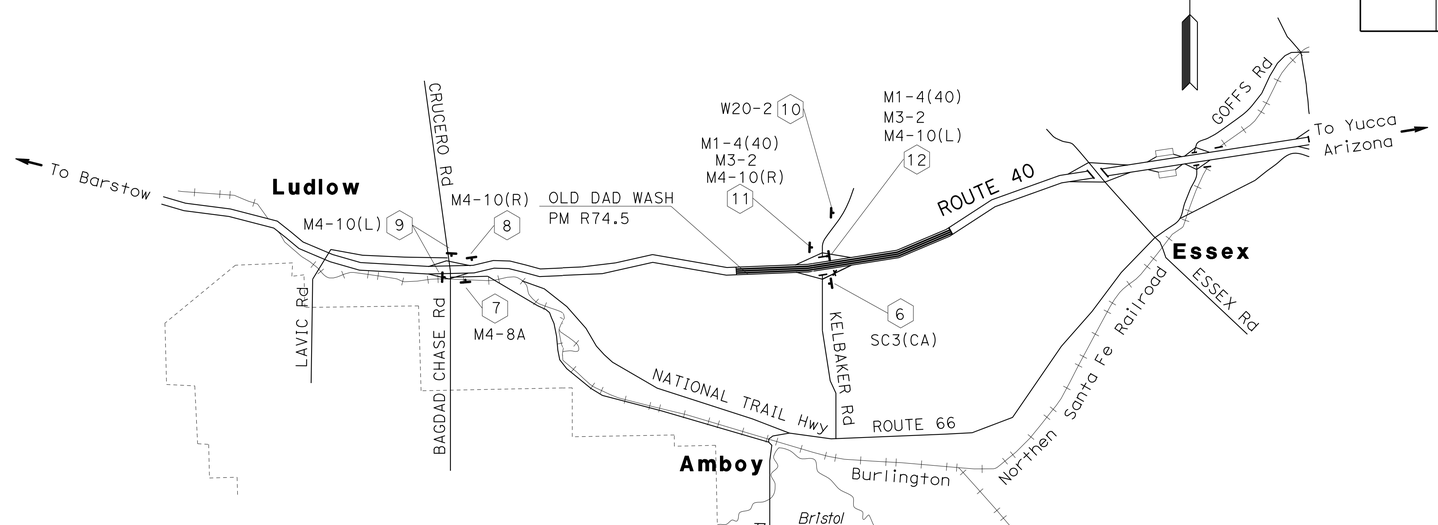

EASTBOUND ENTRANCE RAMP CLOSURE AT KELBAKER Rd

APPROVED FOR DETOUR CONSTRUCTION WORK ONLY

DETOUR PLAN

NO SCALE

DE-2

STATE OF CALIFORNIA - DEPARTMENT OF TRANSPORTATION
Caltrans® TRAFFIC DESIGN

FUNCTIONAL SUPERVISOR: BILL WASSER
CALCULATED-DESIGNED BY: KEVIN NGUYEN
CHECKED BY: THANH TRINH
REVISED BY
DATE REVISED

LAST REVISION 12-13-13
DATE PLOTTED => 13-DEC-2013
TIME PLOTTED => 09:46

Dist	COUNTY	ROUTE	POST MILES TOTAL PROJECT	SHEET No.	TOTAL SHEETS
08	SBd	40	R73.0/R89.0	13	36

Thanh Trinh 12-13-13
REGISTERED CIVIL ENGINEER DATE

12-16-13
PLANS APPROVAL DATE

REGISTERED PROFESSIONAL ENGINEER T. TRINH No. C41189 Exp. 3-31-15 CIVIL STATE OF CALIFORNIA

THE STATE OF CALIFORNIA OR ITS OFFICERS OR AGENTS SHALL NOT BE RESPONSIBLE FOR THE ACCURACY OR COMPLETENESS OF SCANNED COPIES OF THIS PLAN SHEET.

DETAIL 13M

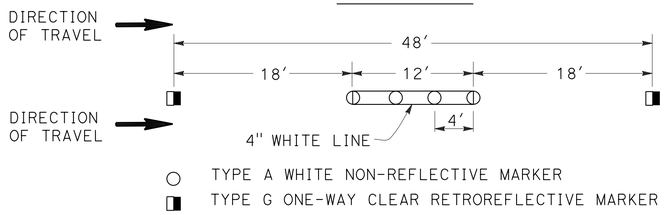

AIRCRAFT MARKING

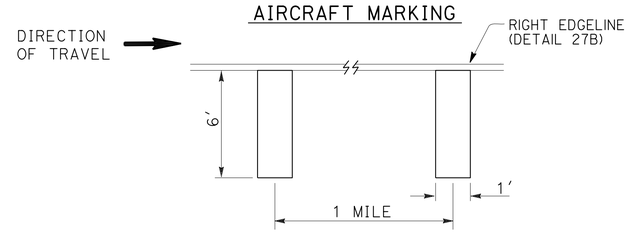

PAVEMENT DELINEATION QUANTITIES

LOCATION	DETAIL No. OR PAVEMENT MARKING	(N) REMOVE PAVEMENT MARKERS	PAVEMENT MARKER			THERMOPLASTIC TRAFFIC STRIPE (SPRAYABLE)			THERMOPLASTIC PAVEMENT MARKING
			NON-REFLECTIVE TYPE	RETRO-REFLECTIVE TYPE					
			A	G	H	4" YELLOW	4" WHITE	8" WHITE	WHITE
		EA	EA	EA			LF		SQFT
PM R78.2 EB (KELBAKER Rd ENTRANCE-RAMP)	8						300		
PM R73.0 TO R89.0 EB	13M	8800	7040	1760			84480		
PM R78.2 EB (KELBAKER Rd ENTRANCE AND EXIT-RAMPS)	25A	116			116	2780			
PM R73.0 TO R89.0 EB	25	1760			1760	84480			
PM R73.0 TO R89.0 EB (INCLUDE STRIPING @ KELBAKER Rd ENTRANCE AND EXIT-RAMPS)	27B						89608		
PM R78.2 EB (KELBAKER Rd ENTRANCE-RAMP)	36A	15		15				348	
PM R78.2 EB (KELBAKER Rd EXIT-RAMP)	36	23		23				518	
PM R78.2 EB (KELBAKER Rd EXIT-RAMP)	LIMIT LINE (1'-0" WHITE LINE)								60
PM R78.2 EB (KELBAKER Rd EXIT-RAMP)	"STOP"								44
PM R78.2 EB (KELBAKER Rd EXIT-RAMP)	"AHEAD"								31
PM R78.2 EB (KELBAKER Rd ENTRANCE-RAMP)	TYPE I (18'-0") ARROW								25
PM R78.2 EB (KELBAKER Rd EXIT-RAMP)	TYPE V ARROW								66
PM R73.0 TO R89.0 EB	AIRCRAFT MARKING (1'-00" WHITE LINE)								108
PM R78.2 WB (KELBAKER Rd ENTRANCE-RAMP)	8						300		
PM R73.0 TO R89.0 WB	13M	8800	7040	1760			84480		
PM R78.2 WB (KELBAKER Rd ENTRANCE AND EXIT-RAMPS)	25A	116			116	2780			
PM R73.0 TO R89.0 WB	25	1760			1760	84480			
PM R73.0 TO R89.0 WB (INCLUDE STRIPING @ KELBAKER Rd ENTRANCE AND EXIT-RAMPS)	27B						89608		
PM R78.2 WB (KELBAKER Rd ENTRANCE-RAMP)	36A	15		15				348	
PM R78.2 WB (KELBAKER Rd EXIT-RAMP)	36	23		23				518	
PM R78.2 WB (KELBAKER Rd EXIT-RAMP)	LIMIT LINE (1'-0" WHITE LINE)								60
PM R78.2 WB (KELBAKER Rd EXIT-RAMP)	"STOP"								44
PM R78.2 WB (KELBAKER Rd EXIT-RAMP)	"AHEAD"								31
PM R78.2 WB (KELBAKER Rd ENTRANCE-RAMP)	TYPE I (18'-0") ARROW								25
PM R78.2 WB (KELBAKER Rd EXIT-RAMP)	TYPE V ARROW								66
PM R73.0 TO R89.0 WB	AIRCRAFT MARKING * (1'-00" WHITE LINE)								108
SUB-TOTAL		21428	14080	3596	3752	174520	348776	1732	668
TOTAL		21428	14080	7348		525028			668

(N)- NOT A SEPARATE PAY ITEM, FOR INFORMATION ONLY.
* REPLACE IN KIND

LOCATION	GUARDRAIL DELINEATOR *	
	TYPE	(EA)
R73.0/R89.0	F	142
R73.0/R89.0	G	58
TOTAL		200

* REPLACE IN KIND

LOCATION	OBJECT MARKER *	
	TYPE	(EA)
R73.0/R89.0	L-1(CA)	30
TOTAL		30

* REPLACE IN KIND

RESET MILEPOST MARKER	
LOCATION	(EA)
R73.0/R89.0	10
TOTAL	10

PAVEMENT DELINEATION QUANTITIES

PDQ-1

STATE OF CALIFORNIA - DEPARTMENT OF TRANSPORTATION
Caltrans® TRAFFIC DESIGN

FUNCTIONAL SUPERVISOR: BILL WASSER
CALCULATED-DESIGNED BY: KEVIN NGUYEN
CHECKED BY: THANH TRINH
REVISED BY
DATE REVISED

LAST REVISION 12-13-13
DATE PLOTTED => 13-DEC-2013
TIME PLOTTED => 09:46

Dist	COUNTY	ROUTE	POST MILES TOTAL PROJECT	SHEET No.	TOTAL SHEETS
08	SBd	40	R73.0/R89.0	14	36

REGISTERED CIVIL ENGINEER DATE 12-13-13

PLANS APPROVAL DATE 12-16-13

REGISTERED PROFESSIONAL ENGINEER ANH V PHAN No. 62294 Exp. 9-30-15 CIVIL STATE OF CALIFORNIA

THE STATE OF CALIFORNIA OR ITS OFFICERS OR AGENTS SHALL NOT BE RESPONSIBLE FOR THE ACCURACY OR COMPLETENESS OF SCANNED COPIES OF THIS PLAN SHEET.

NOTE:

POST MILES ARE APPROXIMATE FOR LIMITS OF 0.35' COLD PLANING AND 0.45' HMA (TYPE C).
EXACT LOCATIONS TO BE DETERMINED BY THE ENGINEER.

LOCATIONS TO BE COLD PLANED 0.35' AND PAVED WITH 0.45' HMA (TYPE C)

WESTBOUND

PM TO PM	LANE No.	LANE WIDTH LF	(N) AREA SQFT
R73 TO R74	2	12	5,400
R74 TO R75	2	12	104
R75 TO R76	2	12	4,872
R76 TO R77	2	12	2,160
	2	12	5,572
	2	12	3,940
R81 TO R82	2	12	10,560
R83 TO R84	2	12	2,800
R86 TO R87	2	12	3,128
R87 TO R88	2	12	13,360
R88 TO R89	2	12	6,552
	2	12	3,560
	1	12	6,400
TOTAL			68,408

(N) NOT A SEPARATE PAY ITEM, FOR INFORMATION ONLY.

EASTBOUND

PM TO PM	LANE No.	LANE WIDTH LF	(N) AREA SQFT
R74 TO R75	2	12	1,440
R75 TO R76	2	12	800
R76 TO R77	2	12	1,100
R77 TO R78	2	12	480
	1	12	240
R78 TO R79	2	12	480
R79 TO R80	2	12	9,800
R80 TO R81	2	12	884
R81 TO R82	2	12	960
	1	12	48
R83 TO R84	2	12	1,560
	2	12	520
R86 TO R87	2	12	1,352
R87 TO R88	2	12	3,296
R88 TO R89	2	12	9,112
TOTAL EASTBOUND			32,072
TOTAL WESTBOUND			68,408
TOTAL			100,480

(N) NOT A SEPARATE PAY ITEM, FOR INFORMATION ONLY.
FOR QUANTITIES OF COLD PLANE AND HMA, SEE SHEET Q-4.

SUMMARY OF QUANTITIES

Q-1

REVISED BY | DATE REVISED
MARC CHAVOUSHI | ANH PHAN
CALCULATED-DESIGNED BY | CHECKED BY
FUNCTIONAL SUPERVISOR: RENEE SASSE
STATE OF CALIFORNIA - DEPARTMENT OF TRANSPORTATION
Caltrans DESIGN

LAST REVISION 12-13-13 | DATE PLOTTED => 13-DEC-2013 TIME PLOTTED => 09:46

Dist	COUNTY	ROUTE	POST MILES TOTAL PROJECT	SHEET No.	TOTAL SHEETS
08	SBd	40	R73.0/R89.0	15	36

REGISTERED CIVIL ENGINEER 12-13-13 DATE

12-16-13
PLANS APPROVAL DATE

REGISTERED PROFESSIONAL ENGINEER
ANH V PHAN
No. 62294
Exp. 9-30-15
CIVIL
STATE OF CALIFORNIA

THE STATE OF CALIFORNIA OR ITS OFFICERS OR AGENTS SHALL NOT BE RESPONSIBLE FOR THE ACCURACY OR COMPLETENESS OF SCANNED COPIES OF THIS PLAN SHEET.

HMA DIKE AND MISCELLANEOUS AREA QUANTITIES

WESTBOUND

PM TO PM	REMOVE AC DIKE	PLACE HMA DIKE TYPE A	PLACE HMA DIKE TYPE E	PLACE HMA DIKE TYPE F	PLACE HMA MISCELLANEOUS AREA	NOTE
	LF	LF			SQFT	
R80.61 TO R80.57 R†	211		211			
R80.39 TO R80.38 R†	53			53		
R79.40 TO R79.36 R†	211			211		
R79.36 TO R79.34 R†	106	106			6.5	OVERSIDE DRAIN
R78.92 TO R78.25 R†	3,538			3,538		EXIT-RAMP AT KELBAKER
R78.05 TO R77.95 R†	528		528			ENTRANCE-RAMP AT KELBAKER
R78.15 TO R78.07 R†	422		422			
R77.94 TO R77.68 R†	1,373			1,373		
R77.68 TO R77.66 R†	106		106			
R76.55 TO R76.50 R†	264			264		
R74.28 TO R74.14 R†	740			740		
R74.14 TO R74.02 R†	634		634		13.0	TWO OVERSIDE DRAINS
R74.02 TO R73.98 R†	211	211				
R73.98 TO R73.96 R†	106		106		6.5	OVERSIDE DRAIN
R73.53 TO R73.34 R†	1,003			1,003		
RAMPS	2,000		2,000			
TOTAL (WESTBOUND)	11,506	317	4,007	7,182	26	

EASTBOUND

PM TO PM	REMOVE AC DIKE	PLACE HMA DIKE TYPE A	PLACE HMA DIKE TYPE E	PLACE HMA DIKE TYPE F	PLACE HMA MISCELLANEOUS AREA	NOTE
	LF	LF			SQFT	
R73.23 TO R73.33 R†	528		528			
R73.48 TO R73.68 R†	1,056			1,056	19.5	THREE OVERSIDE DRAINS
R73.98 TO R74.25 R†	1,426			1,426	19.5	THREE OVERSIDE DRAINS
R75.48 TO R75.49 R†	54			54		AT BADGER WASH
R76.41 TO R76.45 R†	158		158			
R76.45 TO R76.49 R†	264			264		
R76.51 TO R76.57 R†	317		317			
R77.10 TO R77.28 R†	950		950		13.0	TWO OVERSIDE DRAINS
R77.28 TO R77.36 R†	422			422		
R77.40 TO R77.42 R†	106		106			
R77.59 TO R77.69 R†	528		528			
R77.69 TO R77.88 R†	1,003			1,003		
R77.88 TO R78.03 R†	792		792			EXIT-RAMP AT KELBAKER
R78.13 TO R78.15 R†	106			106		
R78.19 TO R78.42 R†	1,214		1,214		6.5	OVERSIDE DRAIN
R78.33 TO R78.52 R†	1,003		1,003			ON-RAMP AT KELBAKER
R78.52 TO R78.67 R†	792		792			
R78.66 TO R79.17 L†	2,693			2,693		
R78.67 TO R79.52 R†	4,488			4,488	6.5	OVERSIDE DRAIN
R79.52 TO R79.54 R†	106	106				
R79.60 TO R79.76 R†	850	850			6.5	OVERSIDE DRAIN
R80.14 TO R80.38 R†	1,267		1,267			AT V-DITCH
R80.38 TO R80.42 L†	211			211		
R80.40 TO R80.43 R†	164			164		
R83.44 TO R83.54 R†	539		539		6.5	OVERSIDE DRAIN
RAMPS	2,500		2,500			
TOTAL (EASTBOUND)	23,537	956	10,694	11,887	78	
TOTAL (WESTBOUND)	11,506	317	4,007	7,182	26	
TOTAL	35,043	1,273	14,701	19,069	104	

NOTE:

1. FOR QUANTITY OF HOT MIX ASPHALT (TYPE A) RELATED TO HMA DIKE AND OVERSIDE DRAIN, SEE SHEET Q-4.

SUMMARY OF QUANTITIES

Q-2

REVISED BY | DATE REVISED
MARC CHAVOUSHI | ANH PHAN
CALCULATED-DESIGNED BY | CHECKED BY
FUNCTIONAL SUPERVISOR: RENEE SASSE
STATE OF CALIFORNIA - DEPARTMENT OF TRANSPORTATION
Caltrans® DESIGN

LAST REVISION 12-13-13 | DATE PLOTTED => 13-DEC-2013 | TIME PLOTTED => 09:46

Dist	COUNTY	ROUTE	POST MILES TOTAL PROJECT	SHEET No.	TOTAL SHEETS
08	SBd	40	R73.0/R89.0	16	36

REGISTERED CIVIL ENGINEER 12-13-13 DATE

12-16-13
PLANS APPROVAL DATE

REGISTERED PROFESSIONAL ENGINEER ANH V PHAN No. 62294 Exp 9-30-15 CIVIL STATE OF CALIFORNIA

THE STATE OF CALIFORNIA OR ITS OFFICERS OR AGENTS SHALL NOT BE RESPONSIBLE FOR THE ACCURACY OR COMPLETENESS OF SCANNED COPIES OF THIS PLAN SHEET.

NOTE:

1. SEE 2010 REVISED STD PLANS RSP A77P1 AND RSP A77T2 FOR DETAILS OF BURIED POST END ANCHOR, ALTERNATIVE TERMINAL SYSTEM AND TYPE 11C LAYOUT.

METAL BEAM GUARD RAILING

WESTBOUND

LOCATION	SALVAGE GUARD RAIL	MGS (7' POST)	MINOR CONCRETE (MINOR STRUCTURE)	TRANSITION RAILING (TYPE WB-31)	ALTERNATIVE TERMINAL SYSTEM FLARED	ALTERNATIVE TERMINAL SYSTEM IN-LINE	END ANCHOR ASSEMBLY (TYPE SFT)	NOTE
	LF		CY	EA	EA		EA	
VAN WINKLE WASH 54-903 R† PM R85.230	125.0	62.5	0.72	1	1			BRIDGE RAIL (TYPE 9)
VAN WINKLE WASH 54-903 L† PM R85.230	300.0	287.5	0.72	1	1			
MARBLE WASH 54-886 R† PM R80.190	150.0	112.5			1			
MARBLE WASH 54-886 L† PM R80.190	137.5	312.5			1			
PM R79.70 TO PM R79.36 R†	1,800.0	1,762.5			1		1	
PM R79.51 TO PM R78.63 L†	4,675.0	4,637.5			1		1	
PM R78.94 TO PM R78.25 R†	3,650.0	3,612.5			1		1	OFF RAMP AT KELBAKER
KELBAKER RD UC 54-885 R† PM R78.174	100.0	37.5	0.72	1	1			BRIDGE RAIL (TYPE 9)
KELBAKER RD UC 54-885 L† PM R78.174	100.0	275.0	0.72	1		1		
PM R77.94 TO PM R77.68 R†	1,362.5	1,325.0			1		1	
PM R77.87 TO PM R77.63 L†	1350	1,300.0				1	1	
WILLOW SPR WASH 54-853 R† PM R77.371	175.0	112.5	0.72	1	1			BRIDGE RAIL (TYPE 9)
WILLOW SPR WASH 54-853 L† PM R77.371	175.0	287.5	0.72	1	1			
GRANITE MT WASH 54-852 R† PM R76.497	200.0	137.5	0.72	1	1			BRIDGE RAIL (TYPE 9)
GRANITE MT WASH 54-852 L† PM R76.497	200.0	287.5	0.72	1	1			
BADGER WASH 54-851 R† PM R75.496	125.0	62.5	0.72	1	1			BRIDGE RAIL (TYPE 9)
BADGER WASH 54-851 L† PM R75.496	125.0	275.0	0.72	1		1		
OLD DAD WASH 54-850 R† PM R74.507	112.5	50.0	0.72	1	1			BRIDGE RAIL (TYPE 9)
OLD DAD WASH 54-850 L† PM R74.507	125.0	275.0	0.72	1		1		
PM R74.30 TO PM R74.14 R†	850.0	812.5			1		1	
PM R74.02 TO PM R73.98 R†	225.0	187.5			1		1	
PM R73.88 TO PM R73.84 R†	200.0	162.5			1		1	
SUBTOTAL (WESTBOUND)	16,262.5	16,375.0	8.64	12	18	4	8	

EASTBOUND

LOCATION	SALVAGE GUARD RAIL	MGS (7' POST)	MINOR CONCRETE (MINOR STRUCTURE)	TRANSITION RAILING (TYPE WB-31)	ALTERNATIVE TERMINAL SYSTEM FLARED	ALTERNATIVE TERMINAL SYSTEM IN-LINE	END ANCHOR ASSEMBLY (TYPE SFT)	NOTE
	LF		CY	EA	EA		EA	
PM R73.45 TO PM R73.68 R†	1,225.0	1,225.0					1	SEE NOTE FOR BURIED END
PM R73.80 TO PM R73.84 R†	175.0	137.5			1		1	
PM R73.95 TO PM R74.26 R†	1,600.0	1,562.5			1		1	
OLD DAD WASH 54-850 R† PM R74.507	100.0	37.5	0.72	1	1			BRIDGE RAIL (TYPE 9)
OLD DAD WASH 54-850 L† PM R74.507	100.0	275.0	0.72	1		1		
BADGER WASH 54-851 R† PM R75.496	100.0	37.5	0.72	1	1			BRIDGE RAIL (TYPE 9)
BADGER WASH 54-851 L† PM R75.496	100.0	275.0	0.72	1		1		
GRANITE MT WASH 54-852 R† PM R76.497	275.0	212.5	0.72	1	1			BRIDGE RAIL TYPE 30A MOD (CONCRETE)
GRANITE MT WASH 54-852 L† PM R76.497	275.0	287.5	0.72	1	1			
WILLOW SPR WASH 54-853 R† PM R77.371	475.0	412.5	0.72	1	1			BRIDGE RAIL TYPE 30A MOD (CONCRETE)
WILLOW SPR WASH 54-853 L† PM R77.371	62.5	312.5	0.72	1	1			
PM R77.59 TO PM R77.87 L†	1,500.0	1,462.5			1		1	
PM R77.69 TO PM R77.88 R†	1,125.0	1,087.5			1		1	
KELBAKER RD UC 54-885 R† PM R78.174	100.0	37.5	0.72	1	1			BRIDGE RAIL (TYPE 9)
KELBAKER RD UC 54-885 L† PM R78.174	100.0	275.0	0.72	1		1		
PM R78.66 TO PM R79.49 L†	4,362.5	4,312.5				1	1	
PM R78.67 TO PM R79.52 R†	4,450.0	4,412.5			1		1	
MARBLE WASH 54-886 R† PM R80.190	150.0	112.5			1			
MARBLE WASH 54-886 L† PM R80.190	250.0	312.5			1			
PM R80.45 TO PM R80.58 R†	687.5	687.5					1	AT END OF BRIDGE
VAN WINKLE WASH 54-903 R† PM R85.230	100.0	37.5	0.72	1	1			BRIDGE RAIL (TYPE 9)
VAN WINKLE WASH 54-903 L† PM R85.230	175.0	287.5	0.72	1	1			
SUBTOTAL (EASTBOUND)	17,487.5	17,800.0	8.64	12	16	4	8	
SUBTOTAL (WESTBOUND)	16,262.5	16,375.0	8.64	12	18	4	8	
TOTAL	33,750	34,175	17.28	24	34	8	16	

SUMMARY OF QUANTITIES

Q-3

STATE OF CALIFORNIA - DEPARTMENT OF TRANSPORTATION
Caltrans® DESIGN

FUNCTIONAL SUPERVISOR: RENEE SASSE
CALCULATED-DESIGNED BY: MARC CHAVOUSHI
CHECKED BY: ANH PHAN
REVISED BY
DATE REVISED

LAST REVISION 12-13-13
DATE PLOTTED => 13-DEC-2013
TIME PLOTTED => 09:46

Dist	COUNTY	ROUTE	POST MILES TOTAL PROJECT	SHEET No.	TOTAL SHEETS
08	SBd	40	R73.0/R89.0	17	36

REGISTERED CIVIL ENGINEER 12-13-13 DATE

12-16-13
PLANS APPROVAL DATE

REGISTERED PROFESSIONAL ENGINEER
ANH V PHAN
No. 62294
Exp. 9-30-15
CIVIL
STATE OF CALIFORNIA

THE STATE OF CALIFORNIA OR ITS OFFICERS OR AGENTS SHALL NOT BE RESPONSIBLE FOR THE ACCURACY OR COMPLETENESS OF SCANNED COPIES OF THIS PLAN SHEET.

ROADWAY QUANTITIES

LOCATION	COLD PLANE AC			HMA (TYPE C)				HMA (TYPE A)			TACK COAT	IMPORTED BORROW	SHOULDER RUMBLE STRIP (HMA, GROUND-IN-INDENTATIONS)	SEAL COAT (RUBBERIZED)			
	DEPTH 0.15′	DEPTH 0.35′	SUB-TOTAL	DEPTH 0.25′	DEPTH 0.45′	UNDER DIKE	SUB-TOTAL	DIKE	MODIFIED OVERSIDE DRAIN	SUB-TOTAL				ASPHALT-RUBBER BINDER	SCREENINGS	ASPHALTIC EMULSION (FOG SEAL COAT)	SAND COVER (SEAL)
	SQYD			TON				TON			TON		STA	TON	TON	TON	TON
EASTBOUND PM R73.0/R89.0	362,517	3,563	366,080	61,175	1,082	370	62,627	401	1.50	402.5	168	3,675	1,690	563	3,830	27	563
WESTBOUND PM R73.0/R89.0	358,479	7,601	366,080	60,493	2,309	146	62,948	157	0.50	157.5	168	3,675	1,690	563	3,830	27	563
RAMPS AT KELBAKER Rd EB EXIT 1570 LF WB ENTRANCE 1700 LF EB ENTRANCE 1750 LF WB EXIT 1470 LF	20,191		20,191	3,407		112	3,519	118		118	9	282					
TOTAL			752,351				129,094			678	345	7,632	3,380	1,126	7,660	54	1,126

TEMPORARY FENCE

TEMPORARY FENCE (TYPE DESERT TORTOISE)	LF
TOTAL	1500

TEMPORARY CONSTRUCTION BMPs

TEMPORARY CONSTRUCTION SITE BMPs	UNITS	QUANTITIES
TEMPORARY FIBER ROLL	LF	500

SUMMARY OF QUANTITIES

Q-4

STATE OF CALIFORNIA - DEPARTMENT OF TRANSPORTATION
Caltrans
DESIGN
FUNCTIONAL SUPERVISOR: RENEE SASSE
CALCULATED-DESIGNED BY: MARC CHAVOUSHI
CHECKED BY: ANH PHAN
REVISED BY
DATE REVISED

LAST REVISION 12-13-13
DATE PLOTTED => 13-DEC-2013
TIME PLOTTED => 09:46

M

Maint	MAINTENANCE
Max	MAXIMUM
MB	METAL BEAM
MBB	METAL BEAM BARRIER
MBGR	METAL BEAM GUARD RAILING
Med	MEDIAN
MGS	MIDWEST GUARDRAIL SYSTEM
MH	MANHOLE
Min	MINIMUM
Misc	MISCELLANEOUS
Misc I & S	MISCELLANEOUS IRON AND STEEL
Mkr	MARKER
Mod	MODIFIED, MODIFY
Mon	MONUMENT
MP	METAL PLATE
MPGR	METAL PLATE GUARD RAILING
MR	MOVEMENT RATING
MSE	MECHANICALLY STABILIZED EMBANKMENT
Mt	MOUNTAIN, MOUNT
Mtl	MATERIAL
MVP	MAINTENANCE VEHICLE PULLOUT

N

N	NORTH
NB	NORTHBOUND
No.	NUMBER (MUST HAVE PERIOD)
Nos.	NUMBERS (MUST HAVE PERIOD)
NPS	NOMINAL PIPE SIZE
NS	NEAR SIDE
NSP	NEW STANDARD PLAN
NTS	NOT TO SCALE

O

Oblr	OBLITERATE
OC	OVERCROSSING
OD	OUTSIDE DIAMETER
OF	OUTSIDE FACE
OG	ORIGINAL GROUND
OGAC	OPEN GRADED ASPHALT CONCRETE
OGFC	OPEN GRADED FRICTION COURSE
OH	OVERHEAD
OHWM	ORDINARY HIGH WATER MARK
O-O	OUT TO OUT
Opp	OPPOSITE
OSD	OVERSIDE DRAIN

P

p	PAGE
PAP	PERFORATED ALUMINUM PIPE
PB	PULL BOX
PC	POINT OF CURVATURE, PRECAST
PCC	POINT OF COMPOUND CURVE, PORTLAND CEMENT CONCRETE
PCMS	PORTABLE CHANGEABLE MESSAGE SIGN
PCP	PERFORATED CONCRETE PIPE, PRESTRESSED CONCRETE PIPE
PCVC	POINT OF COMPOUND VERTICAL CURVE
PEC	PERMIT TO ENTER AND CONSTRUCT
Ped	PEDESTRIAN
Ped OC	PEDESTRIAN OVERCROSSING
Ped UC	PEDESTRIAN UNDERCROSSING
Perm Mtl	PERMEABLE MATERIAL

P continued

PG	PROFILE GRADE
PI	POINT OF INTERSECTION
PJP	PARTIAL JOINT PENETRATION
Pkwy	PARKWAY
₱,PL	PLATE
P/L	PROPERTY LINE
PM	POST MILE, TIME FROM NOON TO MIDNIGHT
PN	PAVING NOTCH
POC	POINT OF HORIZONTAL CURVE
POT	POINT OF TANGENT
POVC	POINT OF VERTICAL CURVE
PP	PIPE PILE, PLASTIC PIPE, POWER POLE
PPL	PREFORMED PERMEABLE LINER
PPP	PERFORATED PLASTIC PIPE
PRC	POINT OF REVERSE CURVE
PRF	PAVEMENT REINFORCING FABRIC
PRVC	POINT OF REVERSE VERTICAL CURVE
PS&E	PLANS, SPECIFICATIONS AND ESTIMATES
PS, P/S	PRESTRESSED
PSP	PERFORATED STEEL PIPE
PT	POINT OF TANGENCY
PVC	POLYVINYL CHLORIDE
Pvmt	PAVEMENT

Q

Qty	QUANTITY

R

R	RADIUS
R & D	REMOVE AND DISPOSE
R & S	REMOVE AND SALVAGE
R/C	RATE OF CHANGE
RCA	REINFORCED CONCRETE ARCH
RCB	REINFORCED CONCRETE BOX
RCP	REINFORCED CONCRETE PIPE
RCPA	REINFORCED CONCRETE PIPE ARCH
Rd	ROAD
Reinf	REINFORCED, REINFORCEMENT, REINFORCING
Rel	RELOCATE
Repl	REPLACEMENT
Ret	RETAINING
Rev	REVISED, REVISION
Rdwy	ROADWAY
RHMA	RUBBERIZED HOT MIX ASPHALT
Riv	RIVER
RM	ROAD-MIXED
RP	RADIUS POINT, REFERENCE POINT
RR	RAILROAD
RSP	ROCK SLOPE PROTECTION, REVISED STANDARD PLAN
Rt	RIGHT
Rte	ROUTE
RW	REDWOOD, RETAINING WALL
R/W	RIGHT OF WAY
Rwy	RAILWAY

S

S	SOUTH, SUPPLEMENT
SAE	STRUCTURE APPROACH EMBANKMENT
Salv	SALVAGE
SAPP	STRUCTURAL ALUMINUM PLATE PIPE
SB	SOUTHBOUND
SC	SAND CUSHION
SCSP	SLOTTED CORRUGATED STEEL PIPE
SD	STORM DRAIN
Sec	SECOND, SECTION
Sep	SEPARATION
SG	SUBGRADE
Shld	SHOULDER
Sht	SHEET
Sim	SIMILAR
℄	STATION LINE
SM	SELECTED MATERIAL
Spec	SPECIAL, SPECIFICATIONS
SPP	SLOTTED PLASTIC PIPE
SS	SLOPE STAKE
SSBM	STRAP AND SADDLE BRACKET METHOD
SSD	STRUCTURAL SECTION DRAIN
SSPA	STRUCTURAL STEEL PLATE ARCH
SSPP	STRUCTURAL STEEL PLATE PIPE
SSPPA	STRUCTURAL STEEL PLATE PIPE ARCH
SSRP	STEEL SPIRAL RIB PIPE
St	STREET
Sta	STATION
STBB	SINGLE THRIE BEAM BARRIER
Std	STANDARD
Str	STRUCTURE
Surf	SURFACING
SW	SIDEWALK, SOUND WALL
Swr	SEWER
Sym	SYMMETRICAL
S4S	SURFACE 4 SIDES

T

T	SEMI-TANGENT
Tan	TANGENT
TBB	THRIE BEAM BARRIER
Tbr	TIMBER
TC	TOP OF CURB
TCB	TRAFFIC CONTROL BOX
TCE	TEMPORARY CONSTRUCTION EASEMENT
Tel	TELEPHONE
Temp	TEMPORARY
TG	TOP OF GRADE
Tot	TOTAL
TP	TELEPHONE POLE
TPB	TREATED PERMEABLE BASE
TPM	TREATED PERMEABLE MATERIAL
Trans	TRANSITION

T continued

TS	TRANSVERSE, TRAFFIC SIGNAL, TUBULAR STEEL
Typ	TYPICAL

U

UC	UNDERCROSSING
UD	UNDERDRAIN
UG	UNDERGROUND
UON	UNLESS OTHERWISE NOTED
UP	UNDERPASS

V

V	VALVE, DESIGN SPEED
Var	VARIABLE, VARIES
VC	VERTICAL CURVE
VCP	VITRIFIED CLAY PIPE
Vert	VERTICAL
Via	VIADUCT
Vol	VOLUME

W

W	WEST, WIDTH
WB	WESTBOUND
WH	WEEP HOLE
WM	WIRE MESH
WS	WATER SURFACE
WSP	WELDED STEEL PIPE
Wt	WEIGHT
WV	WATER VALVE
WW	WINGWALL
WWLOL	WINGWALL LAYOUT LINE

X

X Sec	CROSS SECTION
Xing	CROSSING

Y

Yr	YEAR
Yrs	YEARS

Dist	COUNTY	ROUTE	POST MILES TOTAL PROJECT	SHEET No.	TOTAL SHEETS
08	SBd	40	R73.0/R89.0	18	36

Grace M. Tsushima
REGISTERED CIVIL ENGINEER

July 19, 2013
PLANS APPROVAL DATE

REGISTERED PROFESSIONAL ENGINEER
Grace M. Tsushima
No. C49814
Exp. 9-30-14
CIVIL
STATE OF CALIFORNIA

THE STATE OF CALIFORNIA OR ITS OFFICERS OR AGENTS SHALL NOT BE RESPONSIBLE FOR THE ACCURACY OR COMPLETENESS OF SCANNED COPIES OF THIS PLAN SHEET.

TO ACCOMPANY PLANS DATED 12-16-13

UNIT OF MEASUREMENT SYMBOLS:

Some of the symbols used in the project plan quantity tables and in the Bid Item List are:

TABLE A

SYMBOL USED	DEFINITIONS
ACRE	ACRE
CF	CUBIC FOOT
CY	CUBIC YARD
EA	EACH
GAL	GALLON
LB	POUND
LF	LINEAR FOOT
SQFT	SQUARE FOOT
SQYD	SQUARE YARD
STA	100 FEET
TAB	TABLET
TON	2,000 POUNDS

Some of the symbols used in the plans other than in the project plan quantity tables are:

TABLE B

SYMBOL USED	DEFINITIONS
ksi	KIPS PER SQUARE INCH
ksf	KIPS PER SQUARE FOOT
psi	POUNDS PER SQUARE INCH
psf	POUNDS PER SQUARE FOOT
lb/ft^3, pcf	POUNDS PER CUBIC FOOT
tsf	TONS PER SQUARE FOOT
mph, MPH *	MILES PER HOUR
ø	NOMINAL DIAMETER
oz	OUNCE
lb	POUND
kip	1,000 POUNDS
cal	CALORIE
ft	FOOT OR FEET
gal	GALLON

* For use on a sign panel only

STATE OF CALIFORNIA
DEPARTMENT OF TRANSPORTATION

ABBREVIATIONS (SHEET 2 OF 2)

NO SCALE

RSP A10B DATED JULY 19, 2013 SUPERSEDES STANDARD PLAN A10B DATED MAY 20, 2011 - PAGE 2 OF THE STANDARD PLANS BOOK DATED 2010.

REVISED STANDARD PLAN RSP A10B

2010 REVISED STANDARD PLAN RSP A10B

6-7-13

Dist	COUNTY	ROUTE	POST MILES TOTAL PROJECT	SHEET No.	TOTAL SHEETS
08	SBd	40	R73.0/R89.0	19	36

REGISTERED CIVIL ENGINEER

July 19, 2013
PLANS APPROVAL DATE

REGISTERED PROFESSIONAL ENGINEER Roberta L. McLaughlin No. C40375 Exp. 3-31-15 CIVIL STATE OF CALIFORNIA

THE STATE OF CALIFORNIA OR ITS OFFICERS OR AGENTS SHALL NOT BE RESPONSIBLE FOR THE ACCURACY OR COMPLETENESS OF SCANNED COPIES OF THIS PLAN SHEET.

TO ACCOMPANY PLANS DATED 12-16-13

EXIT RAMP NEUTRAL AREA (GORE) TREATMENT

DETAIL 36

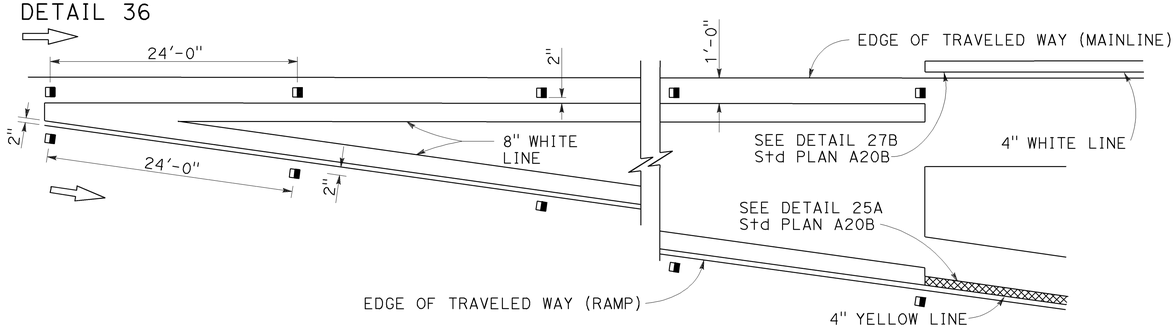

ENTRANCE RAMP NEUTRAL AREA (MERGE) TREATMENT

DETAIL 36A

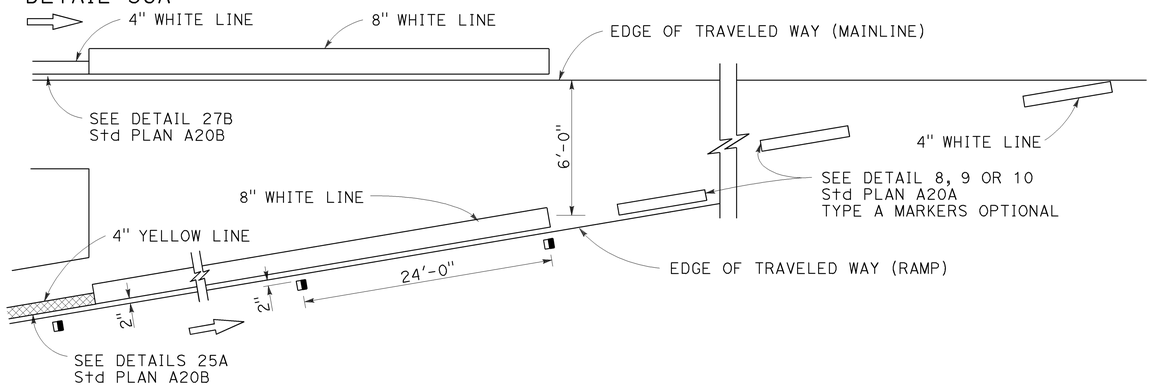

ENTRANCE RAMP NEUTRAL AREA (ACCELERATION LANE) TREATMENT

DETAIL 36B

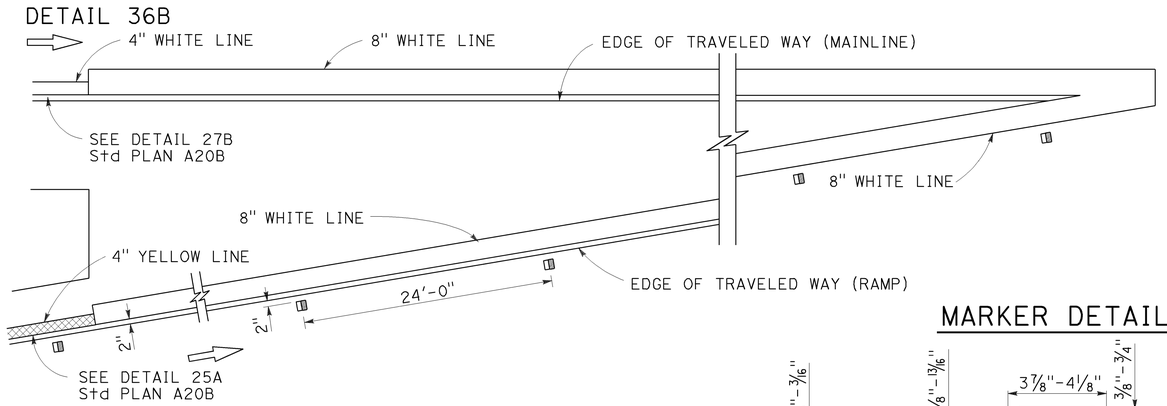

MARKER DETAILS

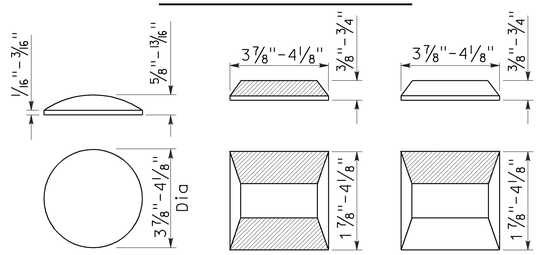

RETROREFLECTIVE FACE

LEGEND:

MARKERS

- ○ TYPE A WHITE NON-REFLECTIVE
- ⊟ TYPE C RED-CLEAR RETROREFLECTIVE
- ◨ TYPE G ONE-WAY CLEAR RETROREFLECTIVE

LANE DROP AT EXIT RAMPS

DETAIL 37

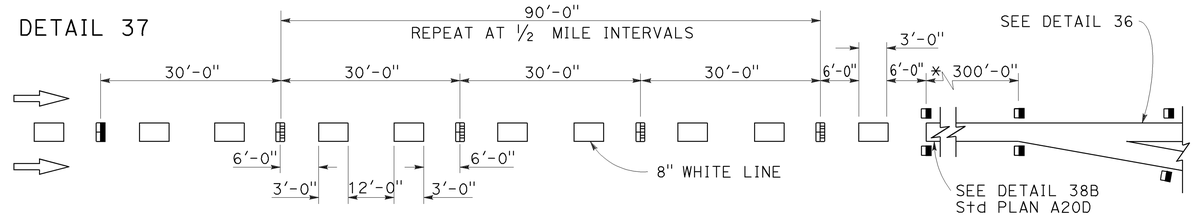

DETAIL 37A

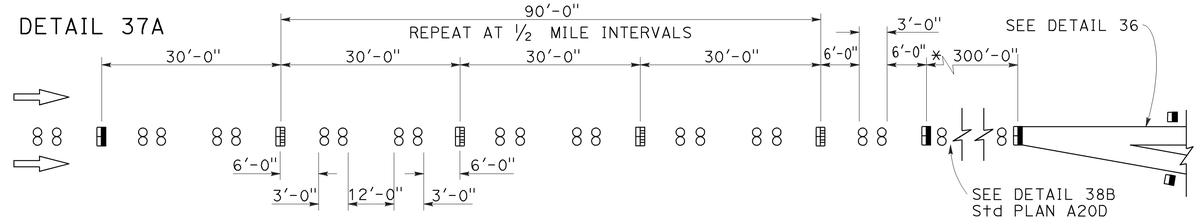

* The solid channelizing line shown may be omitted on short auxiliary lanes where weaving length is critical.

LANE DROP AT INTERSECTIONS

DETAIL 37B

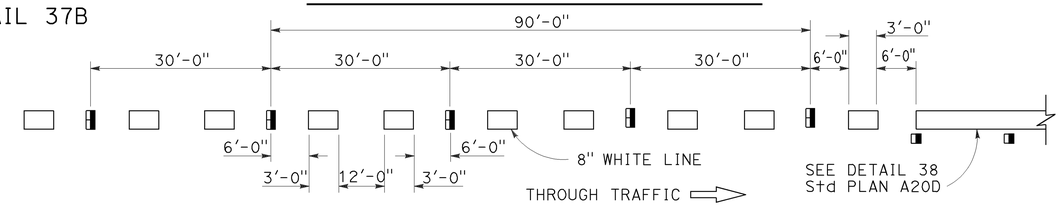

DETAIL 37C

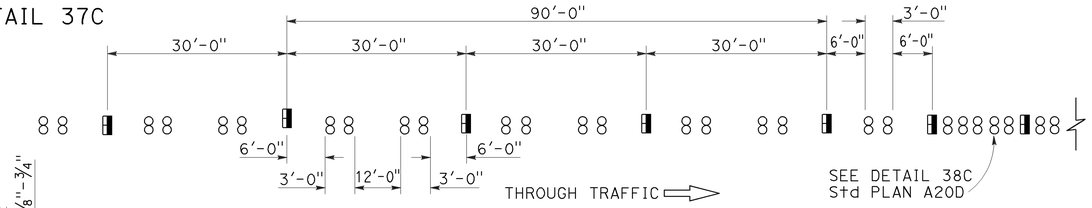

STATE OF CALIFORNIA
DEPARTMENT OF TRANSPORTATION

PAVEMENT MARKERS AND TRAFFIC LINE TYPICAL DETAILS

NO SCALE

RSP A20C DATED JULY 19, 2013 SUPERSEDES STANDARD PLAN A20C DATED MAY 20, 2011 - PAGE 11 OF THE STANDARD PLANS BOOK DATED 2010.

REVISED STANDARD PLAN RSP A20C

2010 REVISED STANDARD PLAN RSP A20C

4-29-13

Dist	COUNTY	ROUTE	POST MILES TOTAL PROJECT	SHEET No.	TOTAL SHEETS
08	SBd	40	R73.0/R89.0	20	36

REGISTERED CIVIL ENGINEER

April 20, 2012
PLANS APPROVAL DATE

REGISTERED PROFESSIONAL ENGINEER
Roberta L. McLaughlin
No. C40375
Exp. 3-31-13
CIVIL
STATE OF CALIFORNIA

THE STATE OF CALIFORNIA OR ITS OFFICERS OR AGENTS SHALL NOT BE RESPONSIBLE FOR THE ACCURACY OR COMPLETENESS OF SCANNED COPIES OF THIS PLAN SHEET.

TO ACCOMPANY PLANS DATED 12-16-13

2010 REVISED STANDARD PLAN RSP A24A

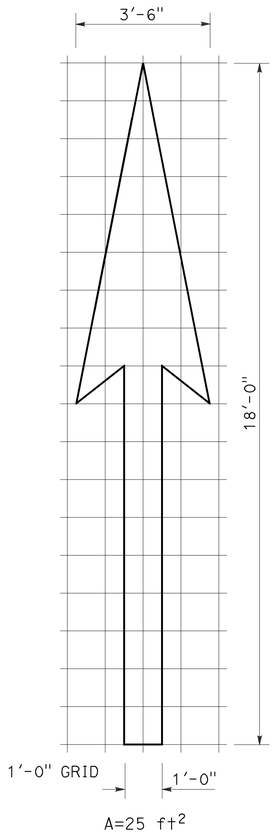

A=25 ft^2

TYPE I 18'-0" ARROW

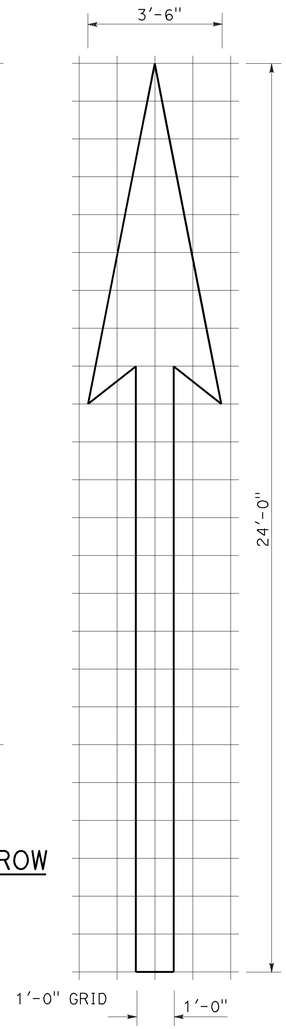

A=31 ft^2

TYPE I 24'-0" ARROW

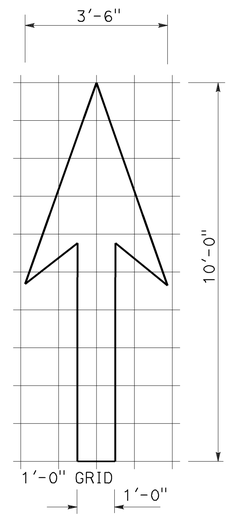

A=14 ft^2

TYPE I 10'-0" ARROW

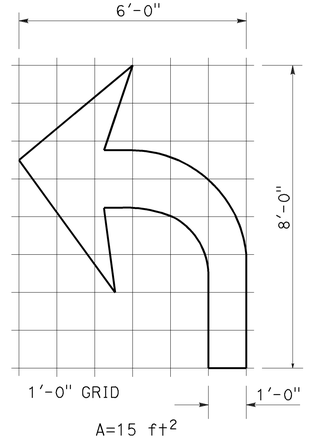

A=15 ft^2

TYPE IV (L) ARROW

(For Type IV (R) arrow, use mirror image)

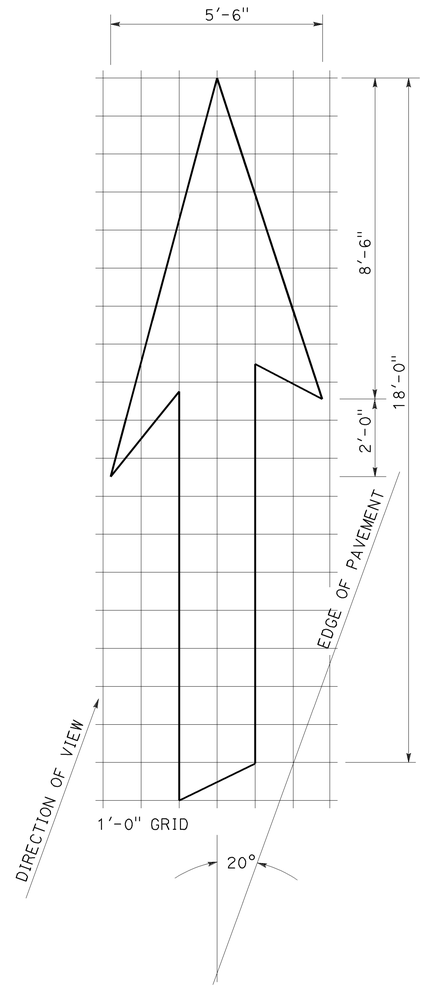

A=42 ft^2

TYPE VI ARROW

Right lane drop arrow
(For left lane, use mirror image)

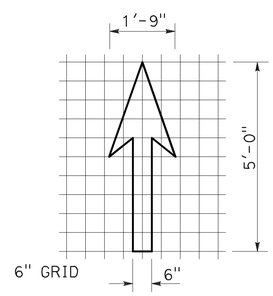

A=3.5 ft^2

BIKE LANE ARROW

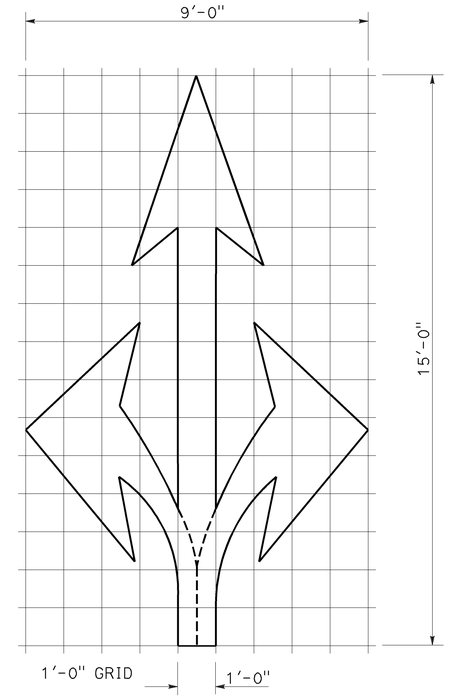

A=36 ft^2

TYPE VIII ARROW

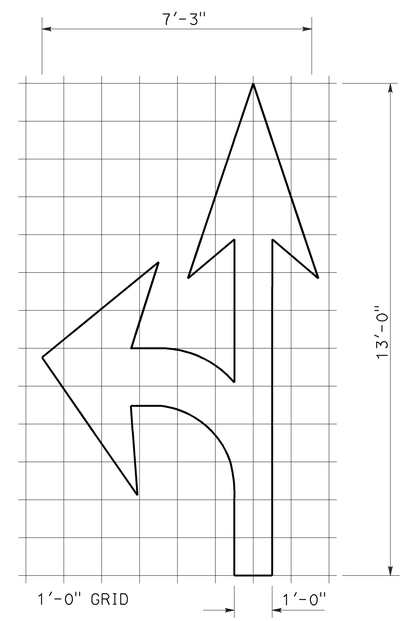

A=27 ft^2

TYPE VII (L) ARROW

(For Type VII (R) arrow, use mirror image)

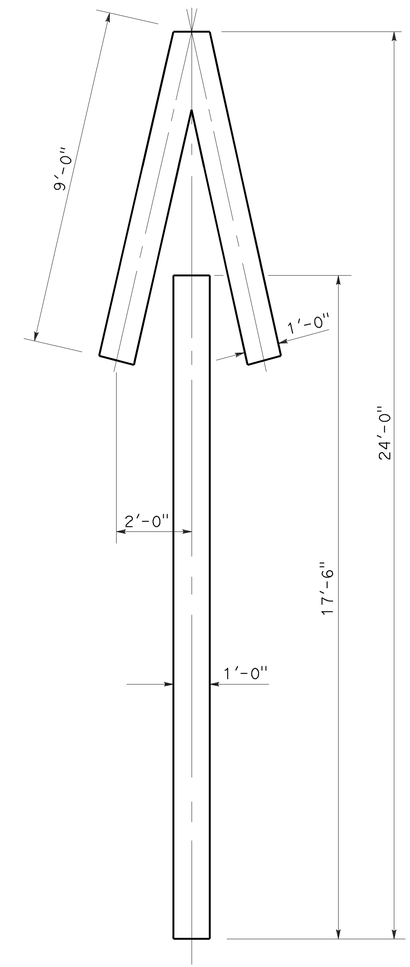

A=33 ft^2

TYPE V ARROW

NOTE:
Minor variations in dimensions may be accepted by the Engineer.

STATE OF CALIFORNIA
DEPARTMENT OF TRANSPORTATION

PAVEMENT MARKINGS ARROWS

NO SCALE

RSP A24A DATED APRIL 20, 2012 SUPERSEDES STANDARD PLAN A24A DATED MAY 20, 2011 - PAGE 13 OF THE STANDARD PLANS BOOK DATED 2010.

REVISED STANDARD PLAN RSP A24A

3-14-12

Dist	COUNTY	ROUTE	POST MILES TOTAL PROJECT	SHEET No.	TOTAL SHEETS
08	SBd	40	R73.0/R89.0	21	36

REGISTERED CIVIL ENGINEER

July 20, 2012
PLANS APPROVAL DATE

REGISTERED PROFESSIONAL ENGINEER
Roberta L. McLaughlin
No. C40375
Exp. 3-31-13
CIVIL
STATE OF CALIFORNIA

THE STATE OF CALIFORNIA OR ITS OFFICERS OR AGENTS SHALL NOT BE RESPONSIBLE FOR THE ACCURACY OR COMPLETENESS OF SCANNED COPIES OF THIS PLAN SHEET.

TO ACCOMPANY PLANS DATED 12-16-13

2010 REVISED STANDARD PLAN RSP A24E

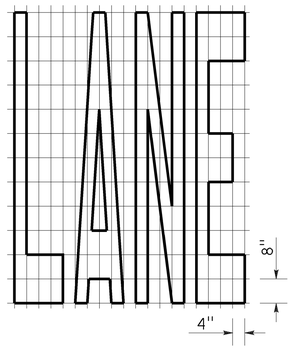

A=24 ft^2

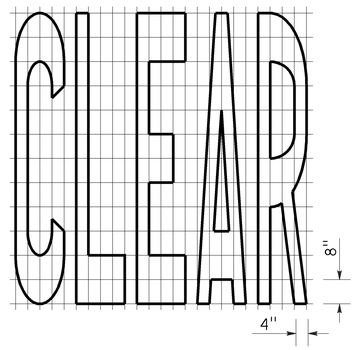

A=27 ft^2

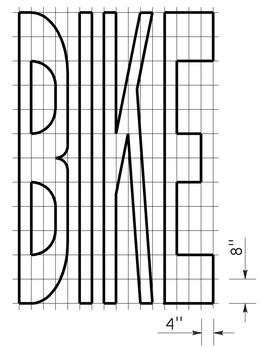

A=21 ft^2

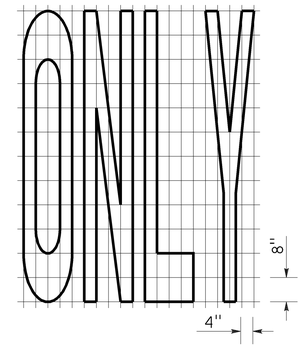

A=22 ft^2

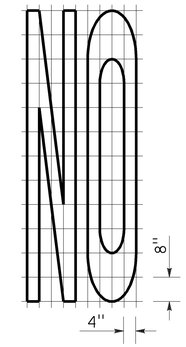

A=14 ft^2

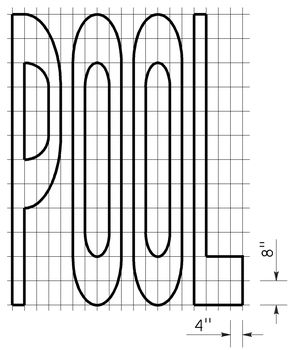

A=23 ft^2

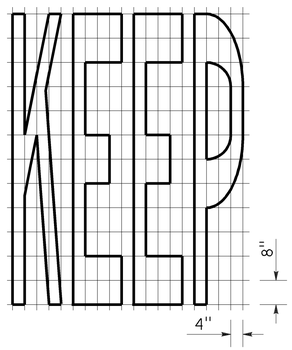

A=24 ft^2

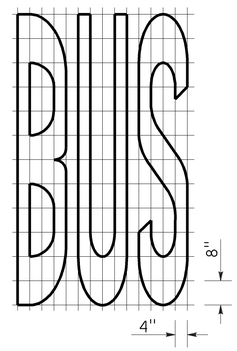

A=20 ft^2

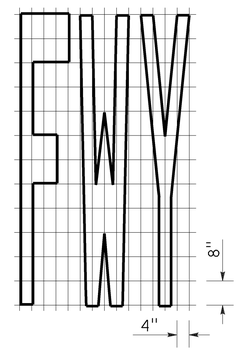

A=16 ft^2

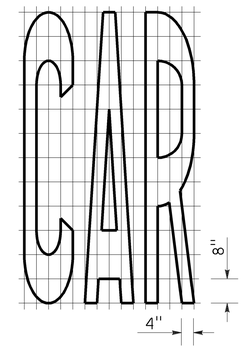

A=17 ft^2

WORD MARKINGS			
ITEM	ft^2	ITEM	ft^2
LANE	24	NO	14
POOL	23	BIKE	21
CAR	17	BUS	20
CLEAR	27	ONLY	22
KEEP	24	FWY	16

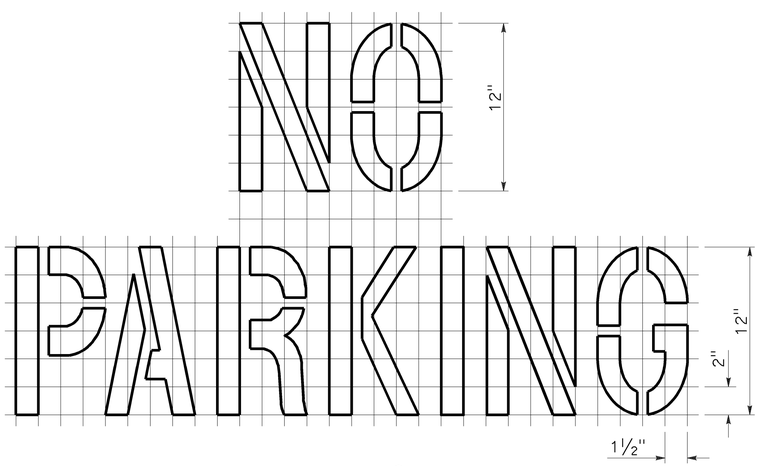

A=2 ft^2
See Notes 6 and 7

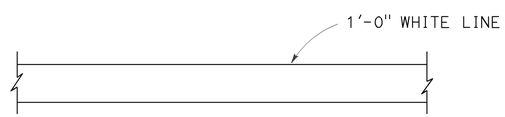

LIMIT LINE (STOP LINE)

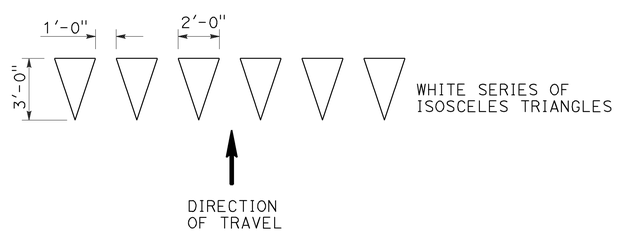

YIELD LINE

NOTES:

1. If a message consists of more than one word, it should read "UP", i.e., the first word should be nearest the driver.
2. The space between words should be at least four times the height of the characters for low speed roads, but not more than ten times the height of the characters. The space may be reduced appropriately where there is limited space because of local conditions.
3. Minor variations in dimensions may be accepted by the Engineer.
4. Portions of a letter, number or symbol may be separated by connecting segments not to exceed 2" in width.
5. The words "NO PARKING" pavement marking is to be used for parking facilities. For typical locations of markings, see Standard Plans A90A and A90B.
6. The words "NO PARKING", shall be painted in white letters no less than 1'-0" high on a contrasting background and located so that it is visible to traffic enforcement officials.

STATE OF CALIFORNIA
DEPARTMENT OF TRANSPORTATION

PAVEMENT MARKINGS
WORDS, LIMIT AND YIELD LINES

NO SCALE

RSP A24E DATED JULY 20, 2012 SUPERSEDES STANDARD PLAN A24E
DATED MAY 20, 2011 - PAGE 17 OF THE STANDARD PLANS BOOK DATED 2010.

REVISED STANDARD PLAN RSP A24E

6-12-12

Dist	COUNTY	ROUTE	POST MILES TOTAL PROJECT	SHEET No.	TOTAL SHEETS
08	SBd	40	R73.0/R89.0	22	36

REGISTERED CIVIL ENGINEER

July 20, 2012
PLANS APPROVAL DATE

REGISTERED PROFESSIONAL ENGINEER
Roberta L. McLaughlin
No. C40375
Exp. 3-31-13
CIVIL
STATE OF CALIFORNIA

THE STATE OF CALIFORNIA OR ITS OFFICERS OR AGENTS SHALL NOT BE RESPONSIBLE FOR THE ACCURACY OR COMPLETENESS OF SCANNED COPIES OF THIS PLAN SHEET.

TO ACCOMPANY PLANS DATED 12-16-13

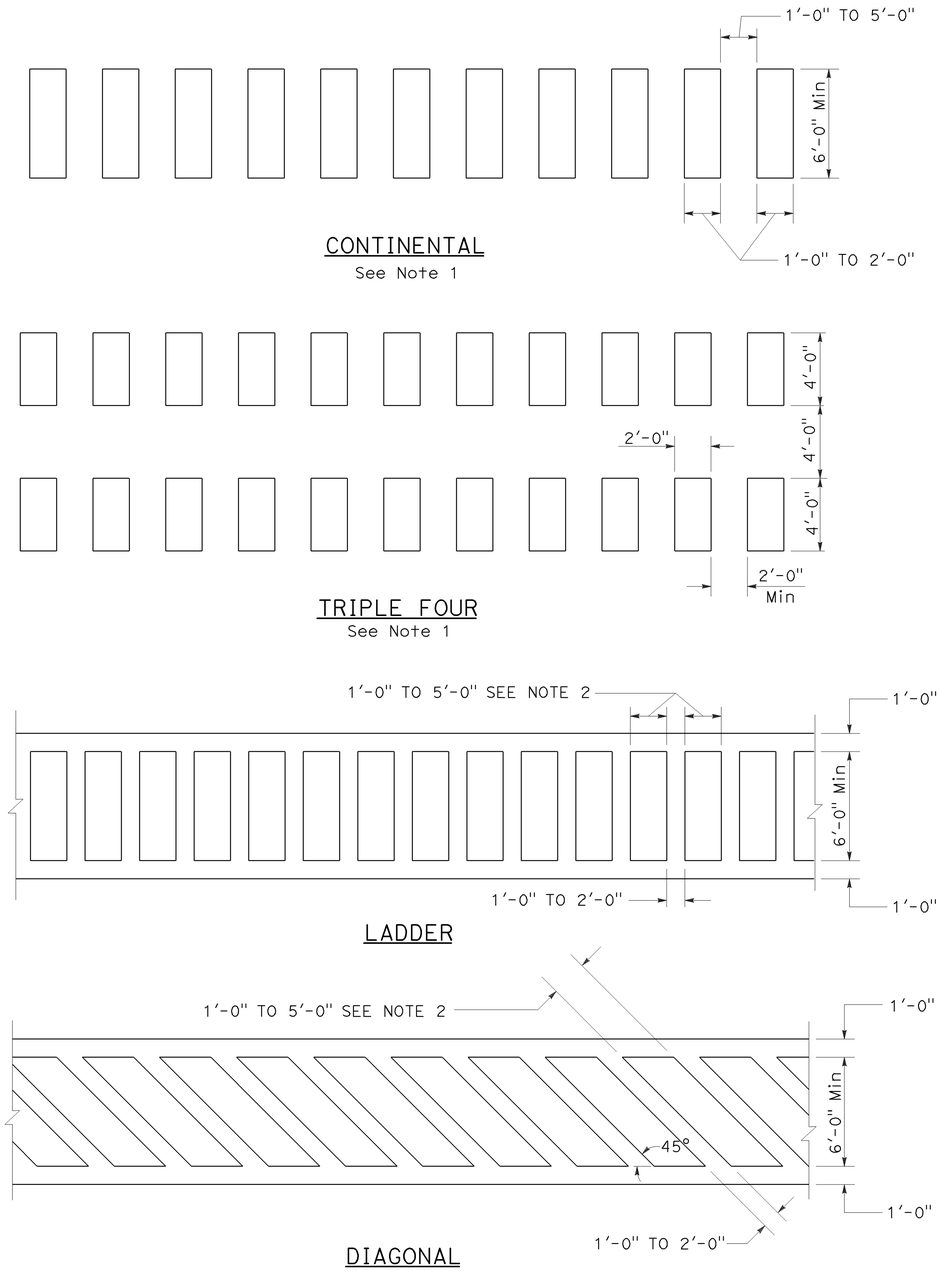

HIGHER VISIBILITY CROSSWALKS

NOTES:

1. Spaces between markings should be placed in wheel tracks of each lane.
2. Spacings not to exceed 2.5 times width of longitudinal line.
3. All crosswalk markings must be white except for those near schools must be yellow.

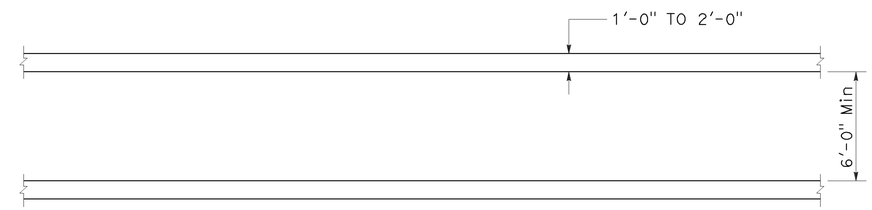

BASIC

STATE OF CALIFORNIA
DEPARTMENT OF TRANSPORTATION

PAVEMENT MARKINGS CROSSWALKS

NO SCALE

RSP A24F DATED JULY 20, 2012 SUPPLEMENTS THE STANDARD PLANS BOOK DATED 2010.

REVISED STANDARD PLAN RSP A24F

2010 REVISED STANDARD PLAN RSP A24F

6-28-12

Dist	COUNTY	ROUTE	POST MILES TOTAL PROJECT	SHEET No.	TOTAL SHEETS
08	SBd	40	R73.0/R89.0	23	36

Randell D. Hiatt
REGISTERED CIVIL ENGINEER

July 19, 2013
PLANS APPROVAL DATE

REGISTERED PROFESSIONAL ENGINEER
Randell D. Hiatt
No. C50200
Exp. 6-30-15
CIVIL
STATE OF CALIFORNIA

THE STATE OF CALIFORNIA OR ITS OFFICERS OR AGENTS SHALL NOT BE RESPONSIBLE FOR THE ACCURACY OR COMPLETENESS OF SCANNED COPIES OF THIS PLAN SHEET.

TO ACCOMPANY PLANS DATED 12-16-13

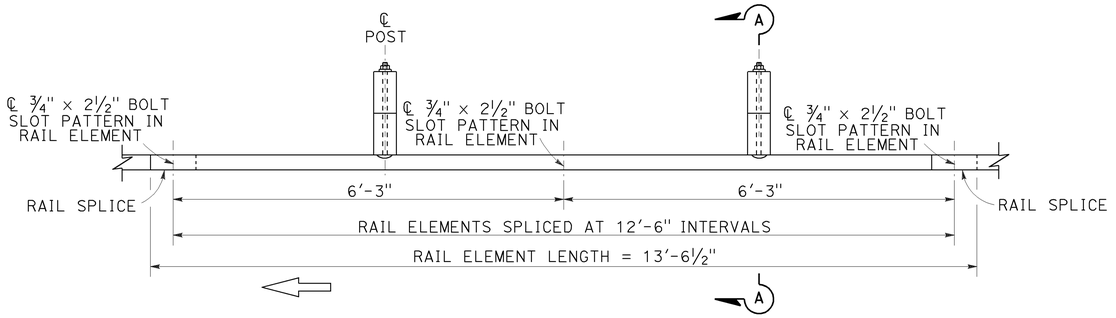

PLAN

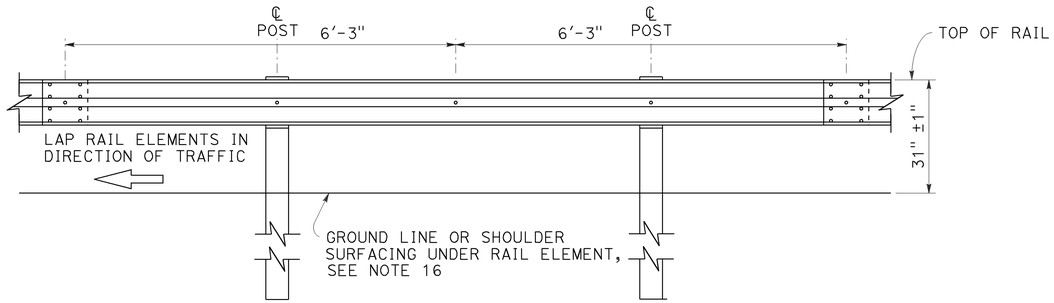

ELEVATION

MIDWEST GUARDRAIL SYSTEM WITH WOOD POST AND BLOCKS

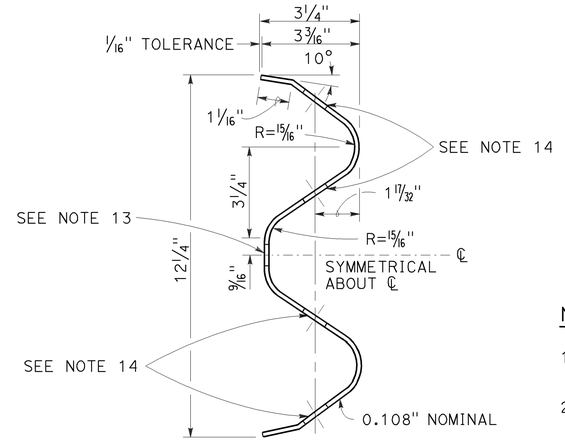

SECTION THRU RAIL ELEMENT

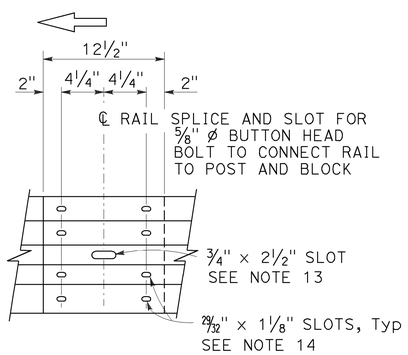

ELEVATION

RAIL ELEMENT SPLICE DETAIL

a) Connect the over lapped end of the rail elements with ⅝" ø × 1⅜" button head oval shoulder splice bolts inserted into the 29/32" × 1⅛" slots and bolted together with ⅝" ø recessed hex nuts. Recess of hex nut points toward rail element. A total of 8 bolts and nuts are to be used at each rail splice connection.

b) The ends of the rail elements are to be overlapped in the direction of traffic (see details).

c) Where end cap is to be attached to the end of a rail element, a total of 4 of the above described splice bolts and nuts are to be used.

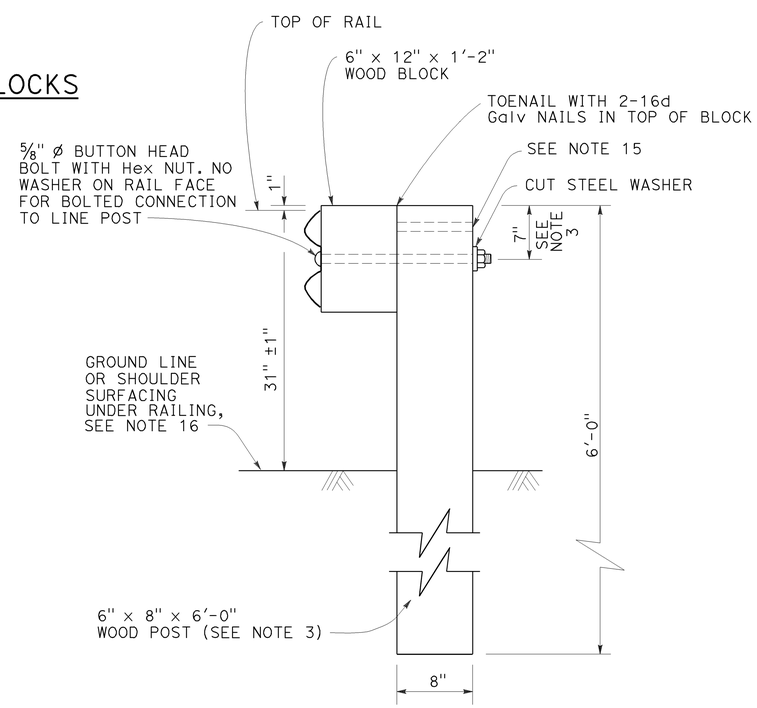

SECTION A-A

TYPICAL WOOD LINE POST INSTALLATION

See Note 4

NOTES:

1. For details of steel post installations, see Revised Standard Plan RSP A77L2.
2. For details of standard hardware used to construct MGS, see Revised Standard Plan RSP A77M1.
3. For details of wood posts and wood blocks used to construct MGS, see Revised Standard Plan RSP A77N1.
4. For additional installation details, see Revised Standard Plan RSP A77N3.
5. MGS post spacing to be 6'-3" center to center, except as otherwise noted.
6. For MGS typical layouts, see the A77P, A77Q and A77R Series of Standard Plans.
7. If railing is connected to terminal system end treatment, use 31" height terminal system end treatment.
8. For MGS end anchor details, see Revised Standard Plans RSP A77S1 and RSP A77T2.
9. For details of MGS transition to bridge railing, see Revised Standard Plan RSP A77U4.
10. For additional details of MSG connection to bridge railing, see Revised Standard Plans RSP A77U1, RSP A77U2 and RSP A77V1.
11. For MGS connection details to abutments and walls, see Revised Standard Plan RSP A77U3.
12. For typical MGS delineation and dike positioning details, see Revised Standard Plan RSP A77N4.
13. Slotted hole for bolted connection of rail element to block and post. See "Section Thru Rail Element".
14. Slotted holes for splice bolts to overlap ends of rail element. See "Section Thru Rail Element".
15. Additional hole in uppermost portion of line post is for potential future adjustments of railing height. See Revised Standard Plan RSP A77N1.
16. Install posts in soil.

STATE OF CALIFORNIA
DEPARTMENT OF TRANSPORTATION

MIDWEST GUARDRAIL SYSTEM STANDARD RAILING SECTION (WOOD POST WITH WOOD BLOCK)

NO SCALE

RSP A77L1 DATED JULY 19, 2013 SUPPLEMENTS STANDARD PLANS BOOK DATED 2010.

REVISED STANDARD PLAN RSP A77L1

2010 REVISED STANDARD PLAN RSP A77L1

7-3-13

Dist	COUNTY	ROUTE	POST MILES TOTAL PROJECT	SHEET No.	TOTAL SHEETS
08	SBd	40	R73.0/R89.0	24	36

Randell D. Hiatt
REGISTERED CIVIL ENGINEER

July 19, 2013
PLANS APPROVAL DATE

REGISTERED PROFESSIONAL ENGINEER
Randell D. Hiatt
No. C50200
Exp. 6-30-15
CIVIL
STATE OF CALIFORNIA

THE STATE OF CALIFORNIA OR ITS OFFICERS OR AGENTS SHALL NOT BE RESPONSIBLE FOR THE ACCURACY OR COMPLETENESS OF SCANNED COPIES OF THIS PLAN SHEET.

TO ACCOMPANY PLANS DATED 12-16-13

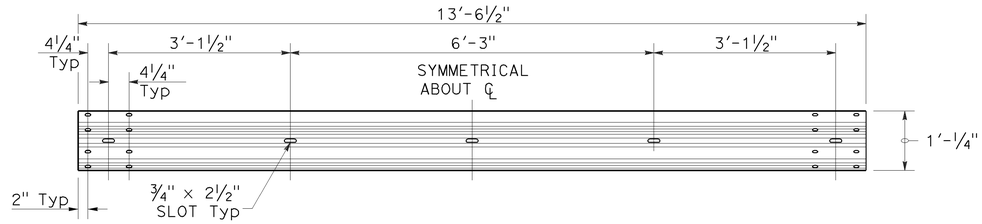

TYPICAL RAIL ELEMENT

NOTE:

1. Slotted holes for splice bolts to overlap ends of rail element.

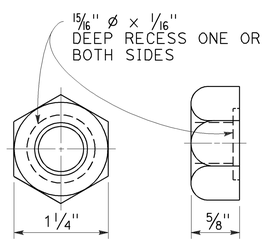

5/8" ø RECESS NUT

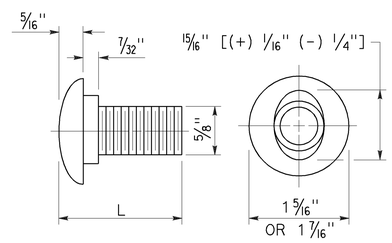

5/8" ø BUTTON HEAD BOLT

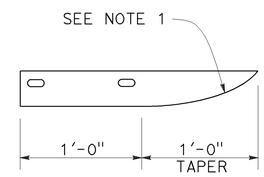

PLAN

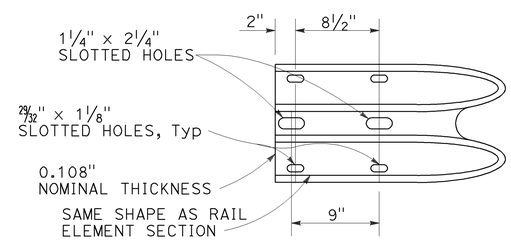

ELEVATION
END CAP
(TYPE A)

BUTTON HEAD BOLT

L	THREAD LENGTH
1 3/8"	FULL THREAD LENGTH
2"	FULL THREAD LENGTH
10"	4" Min THREAD LENGTH
18"	4" Min THREAD LENGTH
20"	4" Min THREAD LENGTH
22"	4" Min THREAD LENGTH
26"	4" Min THREAD LENGTH
36"	4" Min THREAD LENGTH
** 2 3/4"	2" Min THREAD LENGTH
** 19"	4" Min THREAD LENGTH

** For nested rail applications.

STATE OF CALIFORNIA
DEPARTMENT OF TRANSPORTATION

MIDWEST GUARDRAIL SYSTEM STANDARD HARDWARE

NO SCALE

RSP A77M1 DATED JULY 19, 2013 SUPPLEMENTS THE STANDARD PLANS BOOK DATED 2010.

REVISED STANDARD PLAN RSP A77M1

2010 REVISED STANDARD PLAN RSP A77M1

7-3-13

Dist	COUNTY	ROUTE	POST MILES TOTAL PROJECT	SHEET No.	TOTAL SHEETS
08	SBd	40	R73.0/R89.0	25	36

Randell D. Hiatt
REGISTERED CIVIL ENGINEER

July 19, 2013
PLANS APPROVAL DATE

REGISTERED PROFESSIONAL ENGINEER
Randell D. Hiatt
No. C50200
Exp. 6-30-15
CIVIL
STATE OF CALIFORNIA

THE STATE OF CALIFORNIA OR ITS OFFICERS OR AGENTS SHALL NOT BE RESPONSIBLE FOR THE ACCURACY OR COMPLETENESS OF SCANNED COPIES OF THIS PLAN SHEET.

TO ACCOMPANY PLANS DATED 12-16-13

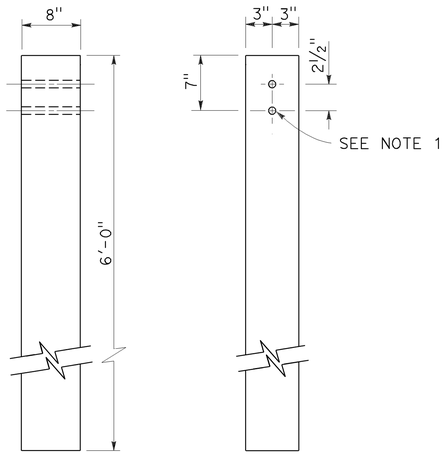

SIDE FRONT

6" x 8" WOOD POST
See Note 3

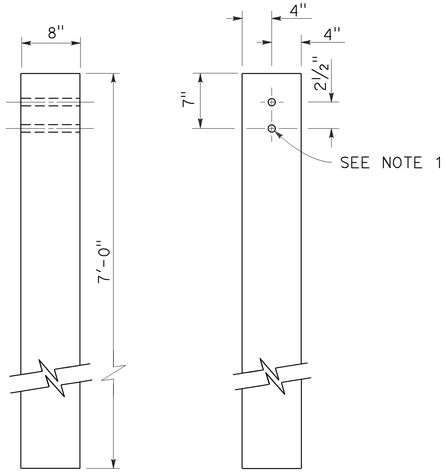

SIDE FRONT

8" x 8" WOOD POST
See Note 4

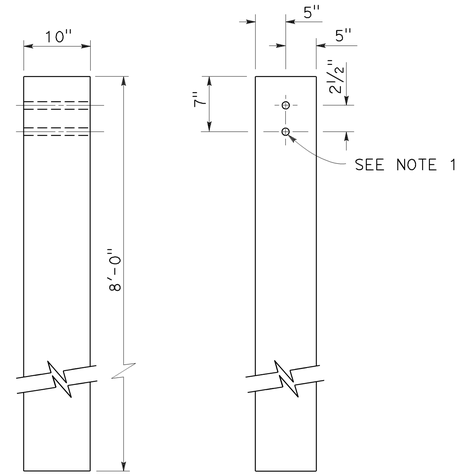

SIDE FRONT

10" x 10" WOOD POST
See Note 5

NOTES:

1. All holes in wood posts and blocks shall be ¾" Dia ± 1/16".
2. Dimensions shown for wood post are nominal.
3. This post and block combination used for standard line post sections of MGS.
4. This post and 8" x 12" block combination used for line post sections of MGS on narrow roadways.
5. This post and 8" x 12" block combination is typically used where strengthened line post sections of MGS are warranted to shield fixed objects.
6. See Revised Standard Plan RSP A77L3 for use of 6" x 8" and 8" x 8" wood blocks.

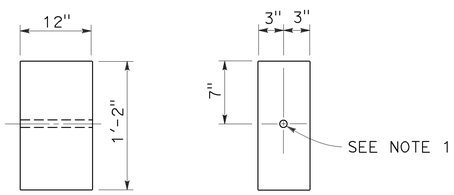

SIDE FRONT

6" x 12" WOOD BLOCK
See Note 3

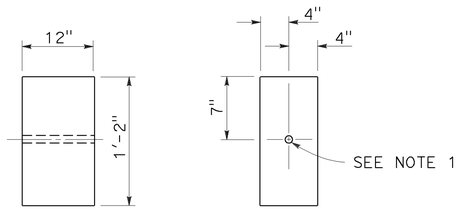

SIDE FRONT

8" x 12" WOOD BLOCK

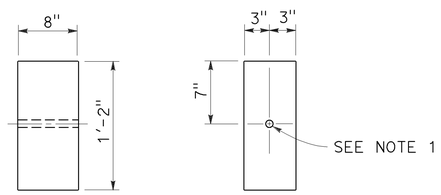

SIDE FRONT

6" x 8" WOOD BLOCK
Only for use with metal beam guard rail see Note 6

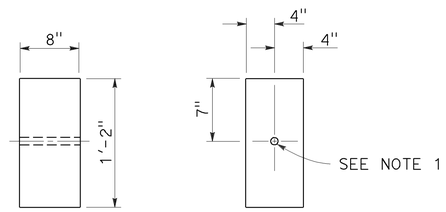

SIDE FRONT

8" x 8" WOOD BLOCK
Only for use with metal beam guard rail see Note 6

STATE OF CALIFORNIA
DEPARTMENT OF TRANSPORTATION

MIDWEST GUARDRAIL SYSTEM WOOD POST AND WOOD BLOCK DETAILS

NO SCALE

RSP A77N1 DATED JULY 19, 2013 SUPPLEMENTS THE STANDARD PLANS BOOK DATED 2010.

REVISED STANDARD PLAN RSP A77N1

2010 REVISED STANDARD PLAN RSP A77N1

Dist	COUNTY	ROUTE	POST MILES TOTAL PROJECT	SHEET No.	TOTAL SHEETS
08	SBd	40	R73.0/R89.0	26	36

Randell D. Hiatt
REGISTERED CIVIL ENGINEER

July 19, 2013
PLANS APPROVAL DATE

REGISTERED PROFESSIONAL ENGINEER
Randell D. Hiatt
No. C50200
Exp. 6-30-15
CIVIL
STATE OF CALIFORNIA

THE STATE OF CALIFORNIA OR ITS OFFICERS OR AGENTS SHALL NOT BE RESPONSIBLE FOR THE ACCURACY OR COMPLETENESS OF SCANNED COPIES OF THIS PLAN SHEET.

TO ACCOMPANY PLANS DATED 12-16-13

2010 REVISED STANDARD PLAN RSP A77N3

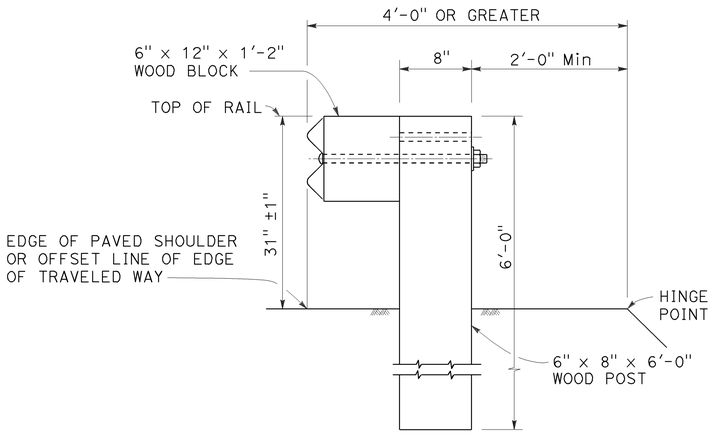

DETAIL A

TYPICAL ROADWAY INSTALLATION

See Note 1

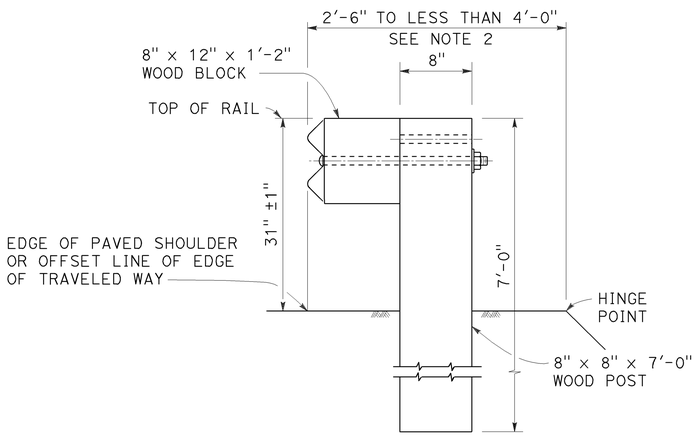

DETAIL B

NARROW ROADWAY INSTALLATION

See Note 1

POST EMBEDMENT

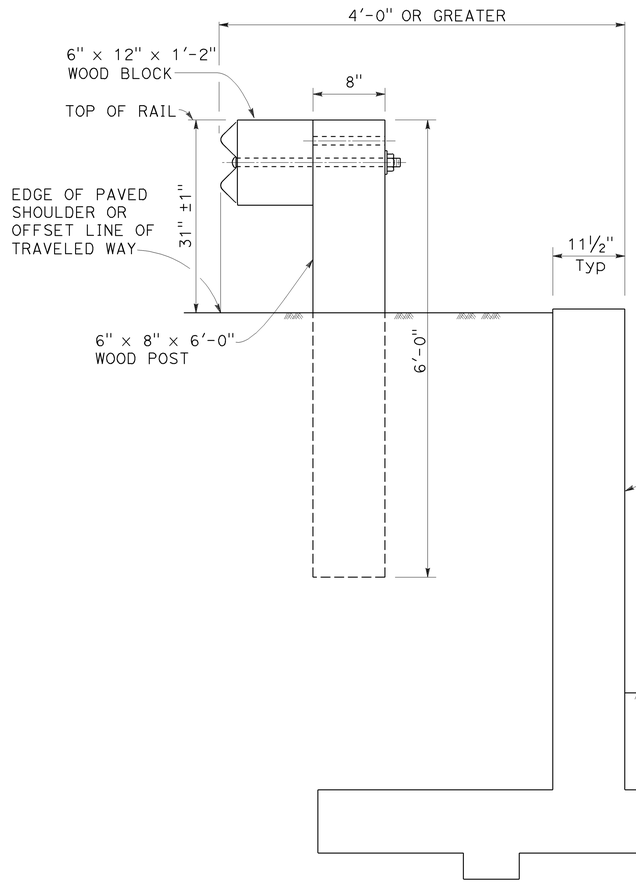

DETAIL C

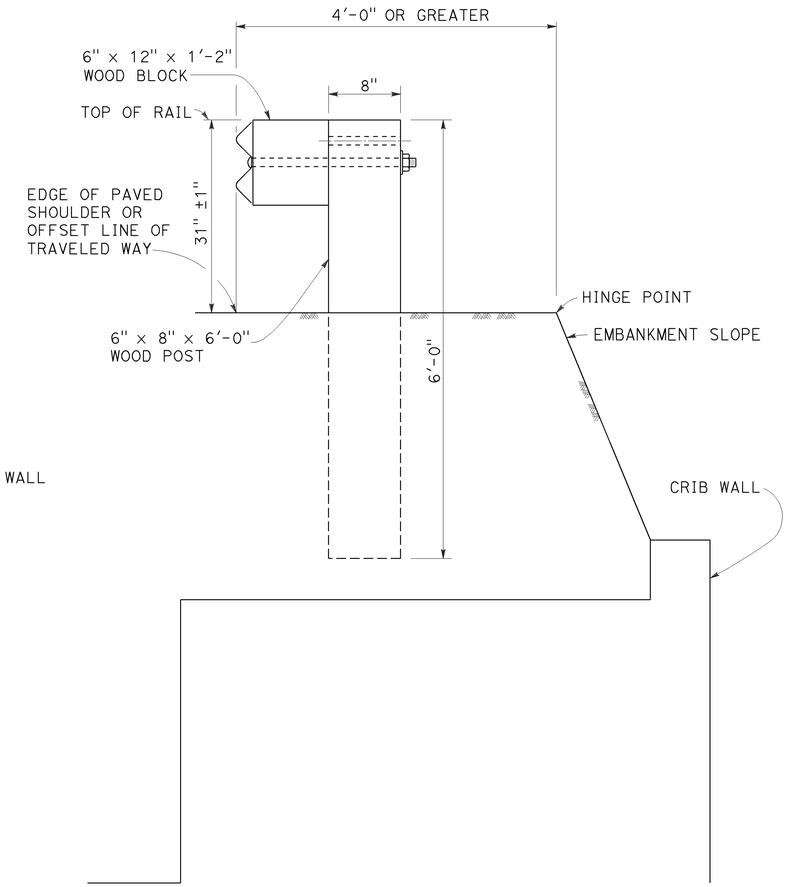

DETAIL D

INSTALLATION AT EARTH RETAINING WALLS

NOTES:

1. These installation details also applicable to steel line post installations. For Detail A, C, and D, where steel line post installations are constructed, W6 x 8.5 or W6 x 9 steel post, 6'-0" in length, with 6" x 12" x 1'-2" notched wood blocks or notched recycled plastic blocks are to be used in place of the size of wood post and wood block shown. For Detail B, where steel line post installations are constructed, or W6 x 15 steel post, 8'-0" in length, with 8" x 12" x 1'-2" notched wood blocks or notched recycled plastic blocks are to be used in place of the size of wood post and wood block shown. For additional installation details, see Revised Standard Plan RSP A77L1 and RSP A77L2.
2. Where the distance between the face of the rail and the hinge point is less than 2'-6", see the Project Plans for special details.
3. For dike positioning with MGS installations, see Revised Standard Plan RSP A77N4.

STATE OF CALIFORNIA
DEPARTMENT OF TRANSPORTATION

MIDWEST GUARDRAIL SYSTEM TYPICAL LINE POST EMBEDMENT AND HINGE POINT OFFSET DETAILS

NO SCALE

RSP A77N3 DATED JULY 19, 2013 SUPPLEMENTS THE STANDARD PLANS BOOK DATED 2010.

REVISED STANDARD PLAN RSP A77N3

Dist	COUNTY	ROUTE	POST MILES TOTAL PROJECT	SHEET No.	TOTAL SHEETS
08	SBd	40	R73.0/R89.0	27	36

Randell D. Hiatt
REGISTERED CIVIL ENGINEER

July 19, 2013
PLANS APPROVAL DATE

REGISTERED PROFESSIONAL ENGINEER
Randell D. Hiatt
No. C50200
Exp. 6-30-15
CIVIL
STATE OF CALIFORNIA

THE STATE OF CALIFORNIA OR ITS OFFICERS OR AGENTS SHALL NOT BE RESPONSIBLE FOR THE ACCURACY OR COMPLETENESS OF SCANNED COPIES OF THIS PLAN SHEET.

TO ACCOMPANY PLANS DATED 12-16-13

NOTES:

1. When necessary to place dike more than 7" in front of face of MGS, only Type C dike may be used. For dike details, see Revised Standard Plan RSP A87B.
2. For standard railing post embedment, see Revised Standard Plan RSP A77N3.
3. MGS delineation to be used where shown on the Project Plans.
4. When dike or curb is placed under MGS, the maximum height of the dike or curb shall be 6". Mountable dike should not be used. For dike and curb details, see Revised Standard Plans RSP A87A and RSP A87B.
5. For details of typical distance between the face of rail and hinge point, see Revised Standard Plan RSP A77N3.
6. For steel line posts, use 1/4 - 20 self-tapping screws in 0.22" diameter holes or 1/4" bolts in 9/32" diameter holes.

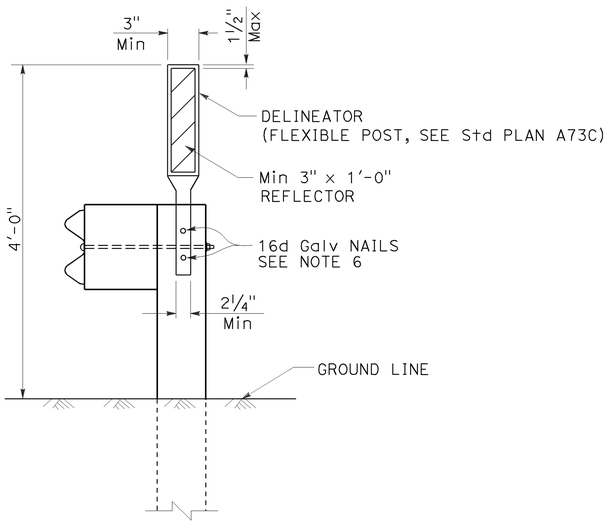

MGS DELINEATION

See Note 3

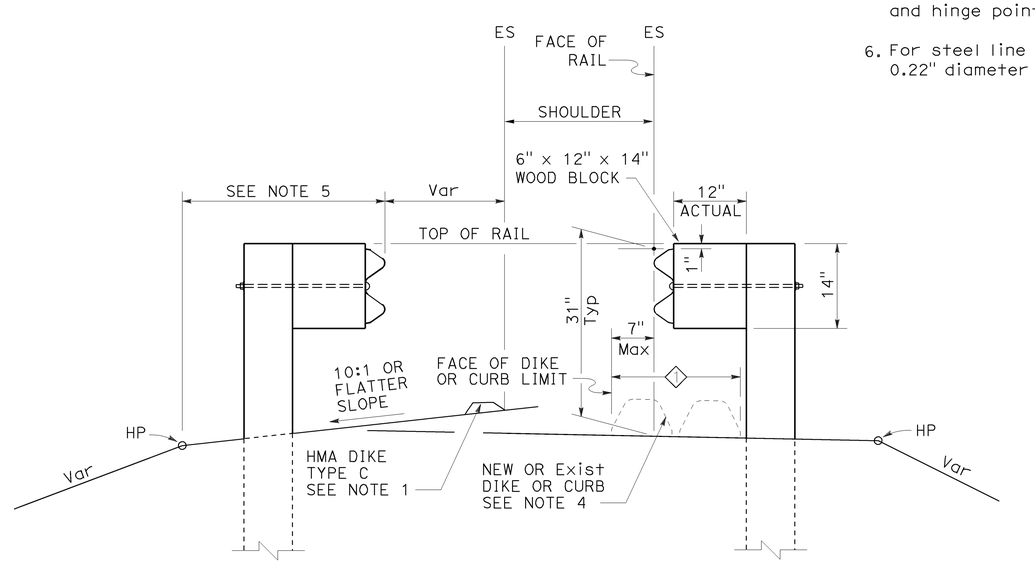

DIKE POSITIONING

See Note 1

1 PERMISSIBLE DIKE OR CURB PLACEMENT AREA

STATE OF CALIFORNIA
DEPARTMENT OF TRANSPORTATION

MIDWEST GUARDRAIL SYSTEM TYPICAL RAILING DELINEATION AND DIKE POSITIONING DETAILS

NO SCALE

RSP A77N4 DATED JULY 19, 2013 SUPPLEMENTS THE STANDARD PLANS BOOK DATED 2010.

REVISED STANDARD PLAN RSP A77N4

2010 REVISED STANDARD PLAN RSP A77N4

7-10-13

Dist	COUNTY	ROUTE	POST MILES TOTAL PROJECT	SHEET No.	TOTAL SHEETS
08	SBd	40	R73.0/R89.0	28	36

Randell D. Hiatt
REGISTERED CIVIL ENGINEER

July 19, 2013
PLANS APPROVAL DATE

REGISTERED PROFESSIONAL ENGINEER
Randell D. Hiatt
No. C50200
Exp. 6-30-15
CIVIL
STATE OF CALIFORNIA

THE STATE OF CALIFORNIA OR ITS OFFICERS OR AGENTS SHALL NOT BE RESPONSIBLE FOR THE ACCURACY OR COMPLETENESS OF SCANNED COPIES OF THIS PLAN SHEET.

TO ACCOMPANY PLANS DATED 12-16-13

2010 REVISED STANDARD PLAN RSP A77P1

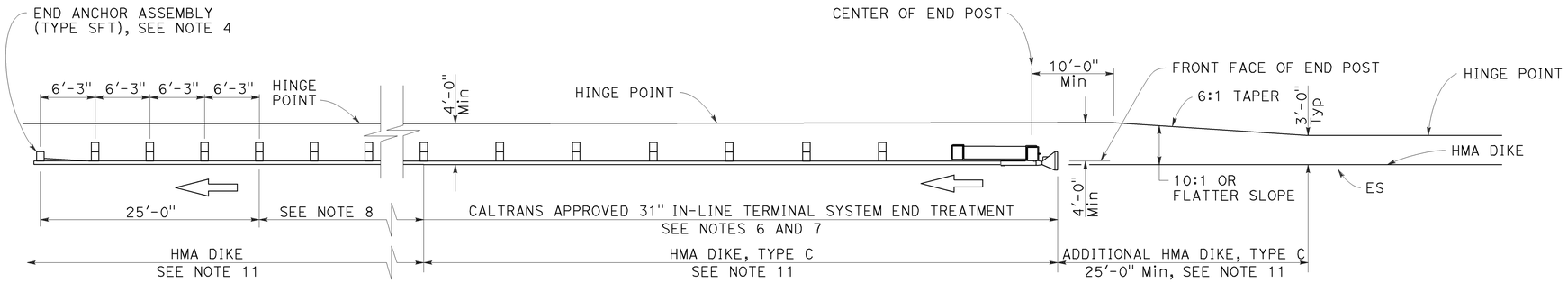

TYPE 11A LAYOUT

(Embankment MGS installation with 31" in-line end treatment at traffic approach end of railing) see Note 5

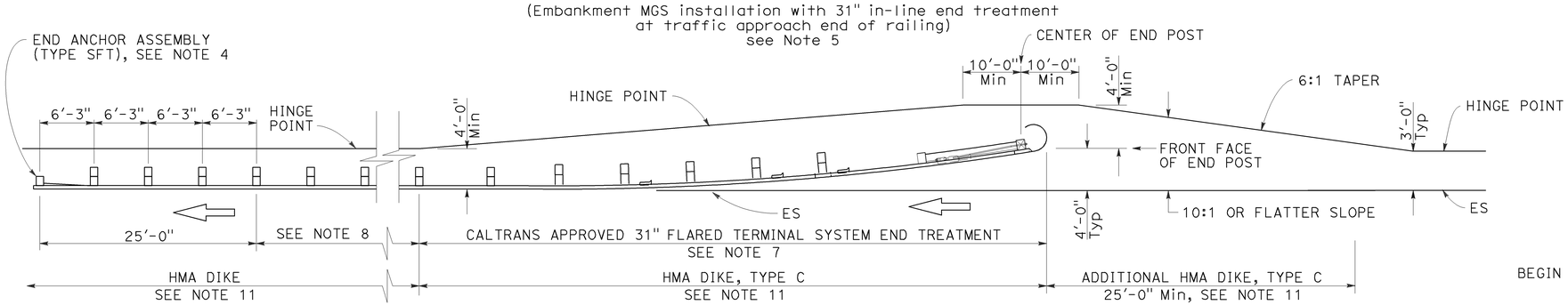

TYPE 11B LAYOUT

(Embankment MGS installation with 31" flared end treatment at traffic approach end of railing) see Note 5

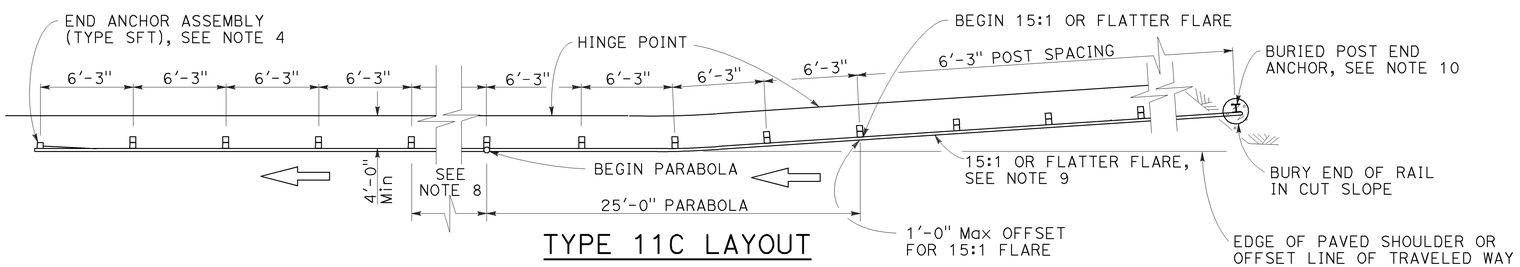

TYPE 11C LAYOUT

(Embankment MGS installation with buried end anchor treatment at traffic approach end of railing) see Notes 5 and 11

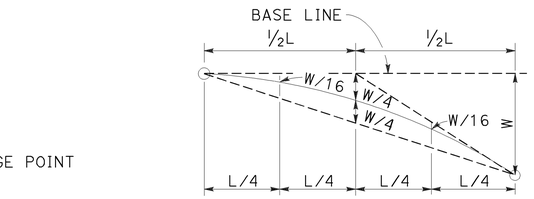

TYPICAL PARABOLIC LAYOUT

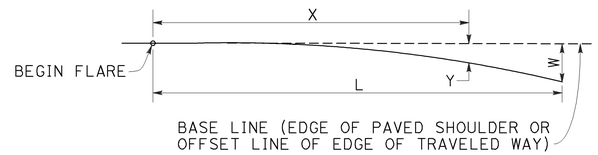

$$Y = \frac{WX^2}{L^2}$$

Y = OFFSET FROM BASE LINE
W = MAXIMUM OFFSET
X = DISTANCE ALONG BASE LINE
L = LENGTH OF FLARE

PARABOLIC FLARE OFFSETS

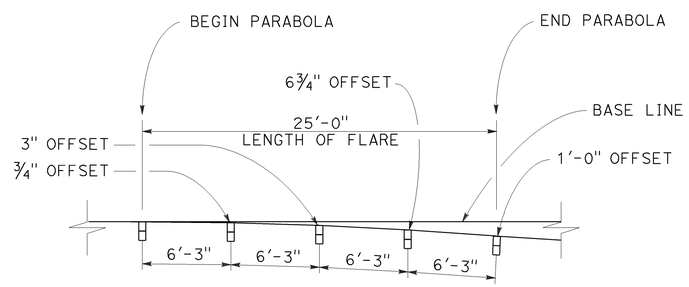

TYPICAL FLARE OFFSETS FOR 1 FOOT Max END OFFSET

STATE OF CALIFORNIA
DEPARTMENT OF TRANSPORTATION

MIDWEST GUARDRAIL SYSTEM TYPICAL LAYOUTS FOR EMBANKMENTS

NO SCALE

NOTES:

1. Line post, blocks and hardware to be used are shown on Revised Standard Plans RSP A77L1, RSP A77L2, RSP A77M1, RSP A77N1 and RSP A77N2.
2. MGS post spacing to be 6'-3" center to center, except as otherwise noted.
3. Except as noted, line posts are 6" x 8" x 6'-0" wood with 6" x 12" x 1'-2" wood blocks. W6 x 8.5 or W6 x 9 steel posts, 6'-0" in length, with 6" x 12" x 1'-2" notched wood blocks or recycled plastic blocks may be used for 6" x 8" x 6'-0" wood post with 6" x 12" x 1'-2" wood blocks where applicable and when specified.
4. For End Anchor Assembly (Type SFT) details, see Revised Standard Plan RSP A77H1.
5. Layout Types 11A, 11B or 11C are typically used where MGS is recommended to shield embankment slopes and a crashworthy end treatment is required for only one direction of traffic.
6. 31" in-line terminal system end treatments are used where site conditions will not accommodate a flared end treatment.
7. The type of 31" terminal system end treatment to be used will be shown on the Project Plans.
8. Dependent on site conditions (embankment height and side slope), construction of additional MGS (length equal to multiples of 12'-6" with 6'-3" post spacing) may be advisable.
9. The 15:1 or flatter flare used with buried end anchors is based on the edge of the paved shoulder or offset line of edge of the traveled way. The length of MGS within the 15:1 or flatter flare is based on site conditions and should be a length equal to multiples of 12'-6".
10. For details of the buried post end anchor used with Type 11C Layout, see Revised Standard Plan RSP A77T2.
11. Where placement of dike is required with MGS installations, see Revised Standard Plan RSP A77N4 for dike positioning details.

RSP A77P1 DATED JULY 19, 2013 SUPPLEMENTS THE STANDARD PLANS BOOK DATED 2010.

REVISED STANDARD PLAN RSP A77P1

6-20-13

Dist	COUNTY	ROUTE	POST MILES TOTAL PROJECT	SHEET No.	TOTAL SHEETS
08	SBd	40	R73.0/R89.0	29	36

Randell D. Hiatt
REGISTERED CIVIL ENGINEER

July 19, 2013
PLANS APPROVAL DATE

REGISTERED PROFESSIONAL ENGINEER
Randell D. Hiatt
No. C50200
Exp. 6-30-15
CIVIL
STATE OF CALIFORNIA

THE STATE OF CALIFORNIA OR ITS OFFICERS OR AGENTS SHALL NOT BE RESPONSIBLE FOR THE ACCURACY OR COMPLETENESS OF SCANNED COPIES OF THIS PLAN SHEET.

TO ACCOMPANY PLANS DATED 12-16-13

2010 REVISED STANDARD PLAN RSP A77Q1

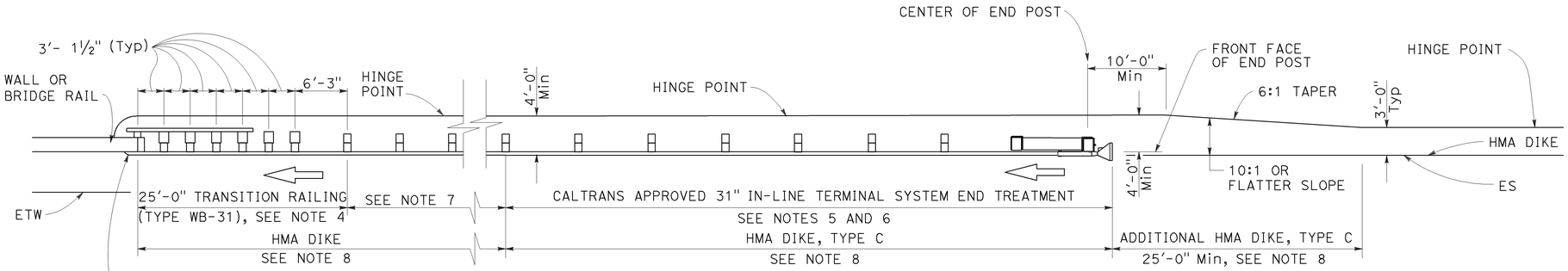

TYPE 12A LAYOUT

(MGS installation at structure approach with
31" In-line end treatment at traffic approach end of railing)
See Notes 9

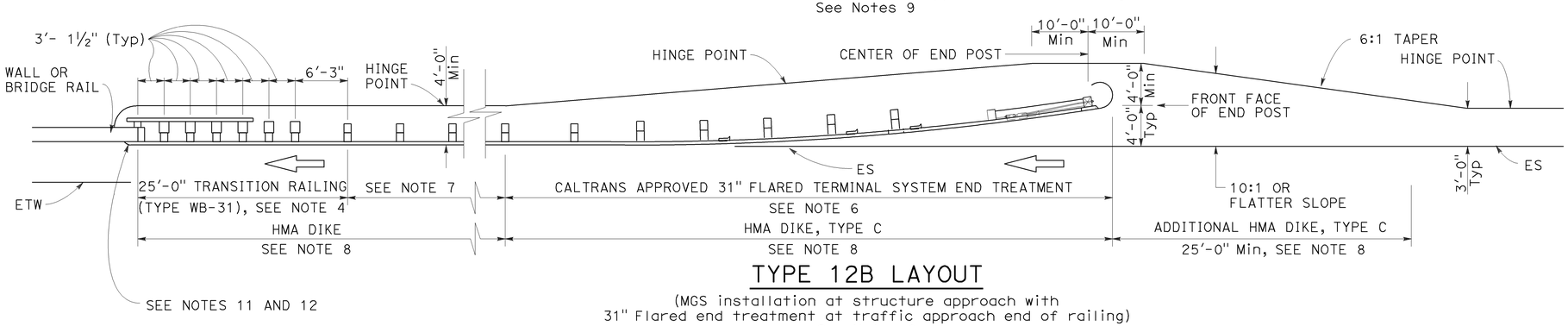

TYPE 12B LAYOUT

(MGS installation at structure approach with
31" Flared end treatment at traffic approach end of railing)
See Notes 9

NOTES:

1. Line post, blocks and hardware to be used are shown on Revised Standard Plans RSP A77L1, RSP A77L2, RSP A77M1, RSP A77N1 and RSP A77N2.
2. MGS post spacing to be 6'-3" center to center, except as otherwise noted.
3. Except as noted, line posts are 6" x 8" x 6'-0" wood with 6" x 12" x 1'-2" wood blocks. W6 x 8.5 or W6 x 9 steel posts, 6'-0" in length, with 6" x 12" x 1'-2" notched wood blocks or plastic blocks may be used for 6" x 8" x 6'-0" wood posts with 6" x 12" x 1'-2" wood blocks where applicable and when specified.
4. For Transition Railing (Type WB-31) details for Types 12A and 12B Layouts, see Revised Standard Plan RSP A77U4.
5. 31" in-line terminal system end treatments are used where site conditions will not accommodate a 31" flared end treatment.
6. The type 31" of terminal system end treatment to be used will be shown on the Project Plans.
7. Dependent on site conditions (embankment height, side slopes, or other fixed objects), it may be advisable to construct additional guard railing (a length equal to multiples of 12'-6" with 6'-3" post spacing) between the transition railing and end treatment. A 12.5 degree angle of departure can be drawn on the Project Plans from the edge of traveled way through the outer most point of the fixed object to determine the additional length of railing needed.
8. Where placement of dike is required with guard railing installations, see Revised Standard Plan RSP A77N4 for dike positioning details.
9. Type 12A or Type 12B Layouts are typically used:
   a. To the right of approaching traffic, at the end of a structure, on two-lane conventional highway where the roadbed width across the structure is less than 40 feet.
   b. To the left of approaching traffic, at the end of a structure, on two-lane conventional highway where the roadbed width across the structure is less than 40 feet.
   c. To the right of approaching traffic at the end of each structure on multilane freeways or expressways with separate adjacent or parallel bridges.
   d. To the right of approaching traffic at the end of the structure on multilane freeways or expressways with decked median on the bridge.
10. See Revised Standard Plan RSP A77Q3 for typical layout used left of approaching traffic at the ends of each structure on multilane freeways or expressways with separate adjacent or parallel bridges.
11. For additional details of typical connections to bridge rail, see Connection Detail AA on Revised Standard Plans RSP A77U1 and RSP A77U2 and Connection Detail FF on Revised Standard Plans RSP A77V1 and RSP A77V2.
12. For additional details of a typical connection to walls or abutments, see Revised Standard Plan RSP A77U3.

STATE OF CALIFORNIA
DEPARTMENT OF TRANSPORTATION

MIDWEST GUARDRAIL SYSTEM TYPICAL LAYOUTS FOR STRUCTURE APPROACH

NO SCALE

RSP A77Q1 DATED JULY 19, 2013 SUPPLEMENTS THE STANDARD PLANS BOOK DATED 2010.

REVISED STANDARD PLAN RSP A77Q1

Dist	COUNTY	ROUTE	POST MILES TOTAL PROJECT	SHEET No.	TOTAL SHEETS
08	SBd	40	R73.0/R89.0	30	36

Randell D. Hiatt
REGISTERED CIVIL ENGINEER

July 19, 2013
PLANS APPROVAL DATE

REGISTERED PROFESSIONAL ENGINEER
Randell D. Hiatt
No. C50200
Exp. 6-30-15
CIVIL
STATE OF CALIFORNIA

THE STATE OF CALIFORNIA OR ITS OFFICERS OR AGENTS SHALL NOT BE RESPONSIBLE FOR THE ACCURACY OR COMPLETENESS OF SCANNED COPIES OF THIS PLAN SHEET.

TO ACCOMPANY PLANS DATED 12-16-13

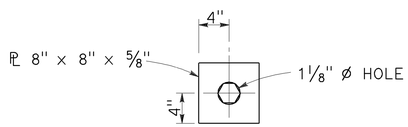

DETAIL "A"
CABLE CONNECTION END PLATE

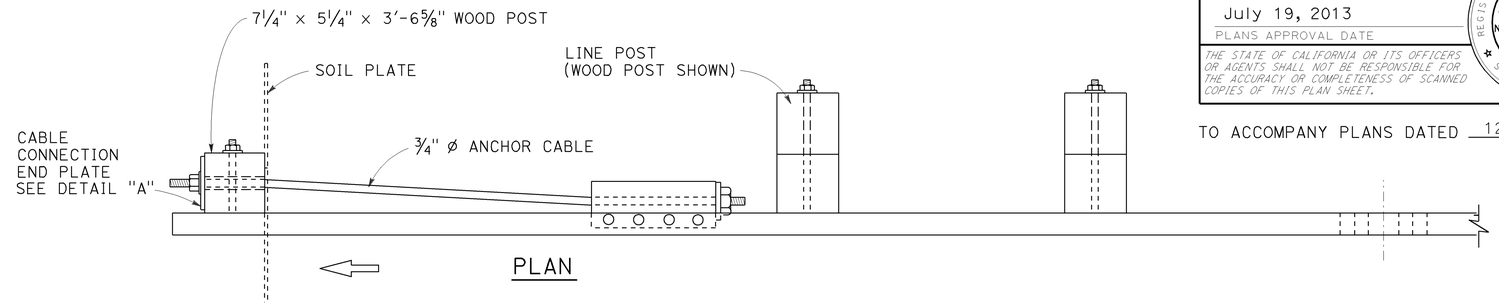

PLAN

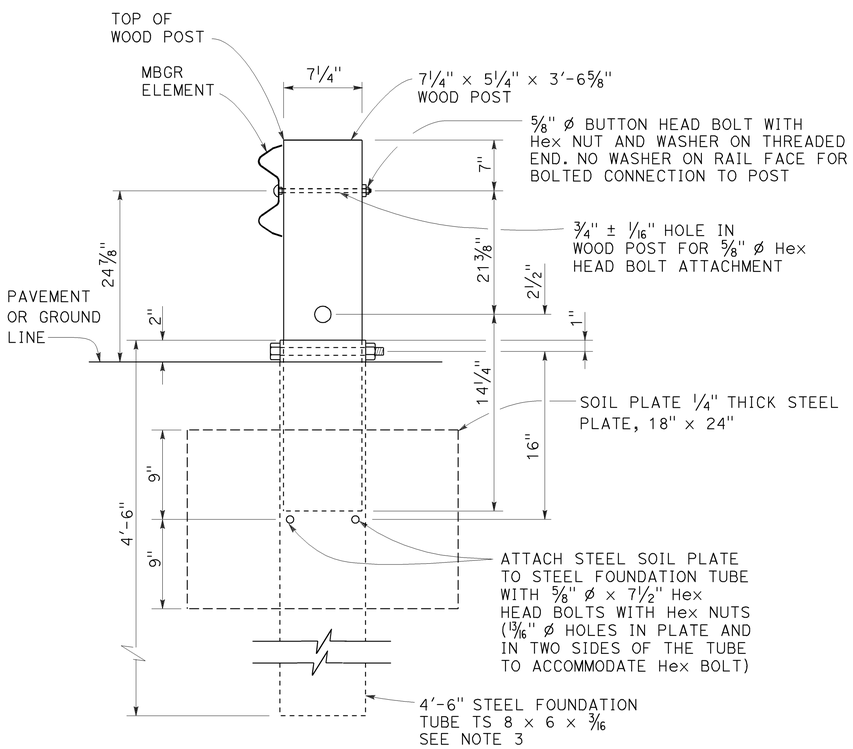

SECTION A-A

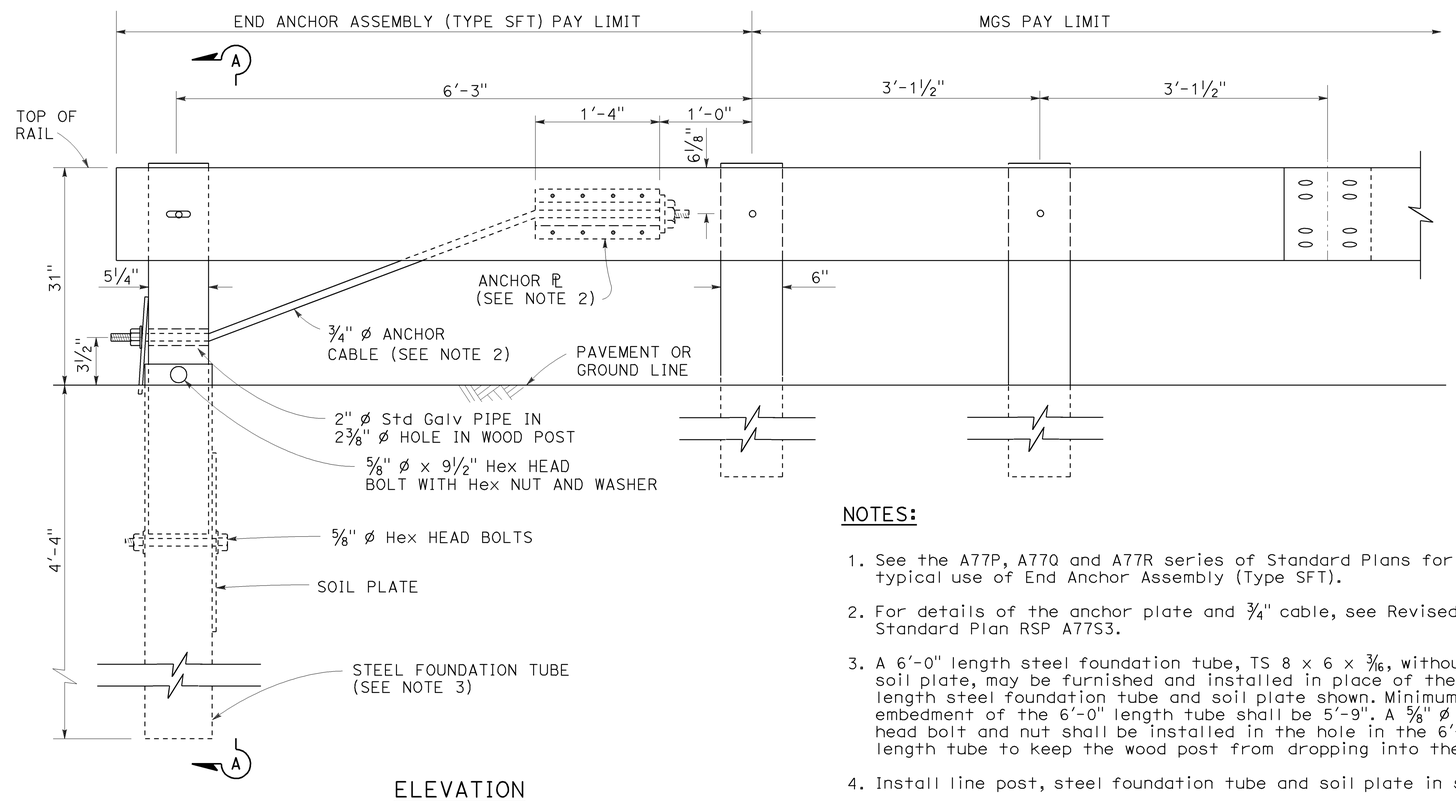

ELEVATION

END ANCHOR
ASSEMBLY (TYPE SFT)
See Note 1

NOTES:

1. See the A77P, A77Q and A77R series of Standard Plans for typical use of End Anchor Assembly (Type SFT).
2. For details of the anchor plate and 3/4" cable, see Revised Standard Plan RSP A77S3.
3. A 6'-0" length steel foundation tube, TS 8 × 6 × 3/16, without a soil plate, may be furnished and installed in place of the 4'-6" length steel foundation tube and soil plate shown. Minimum embedment of the 6'-0" length tube shall be 5'-9". A 5/8" ø Hex head bolt and nut shall be installed in the hole in the 6'-0" length tube to keep the wood post from dropping into the tube.
4. Install line post, steel foundation tube and soil plate in soil.

STATE OF CALIFORNIA
DEPARTMENT OF TRANSPORTATION

MIDWEST GUARDRAIL SYSTEM END ANCHOR ASSEMBLY (TYPE SFT)

NO SCALE

RSP A77S1 DATED JULY 19, 2013 SUPPLEMENTS THE STANDARD PLANS BOOK DATED 2010.

REVISED STANDARD PLAN RSP A77S1

2010 REVISED STANDARD PLAN RSP A77S1

7-3-13

Dist	COUNTY	ROUTE	POST MILES TOTAL PROJECT	SHEET No.	TOTAL SHEETS
08	SBd	40	R73.0/R89.0	31	36

Randell D. Hiatt
REGISTERED CIVIL ENGINEER

July 19, 2013
PLANS APPROVAL DATE

REGISTERED PROFESSIONAL ENGINEER
Randell D. Hiatt
No. C50200
Exp. 6-30-15
CIVIL
STATE OF CALIFORNIA

THE STATE OF CALIFORNIA OR ITS OFFICERS OR AGENTS SHALL NOT BE RESPONSIBLE FOR THE ACCURACY OR COMPLETENESS OF SCANNED COPIES OF THIS PLAN SHEET.

TO ACCOMPANY PLANS DATED 12-16-13

2010 REVISED STANDARD PLAN RSP A77S3

NOTE:

See Revised Standard Plans RSP A77S1, RSP A77S2 and RSP A77T1 for typical use of anchor cable and anchor plate.

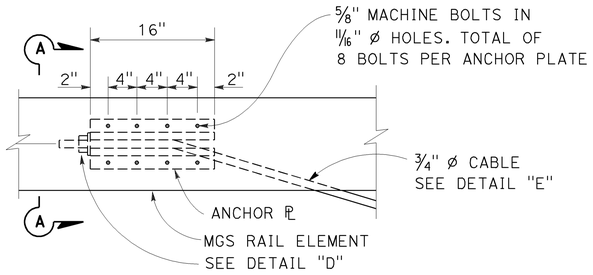

ANCHOR PLATE DETAIL
(MGS shown, TBB similar)

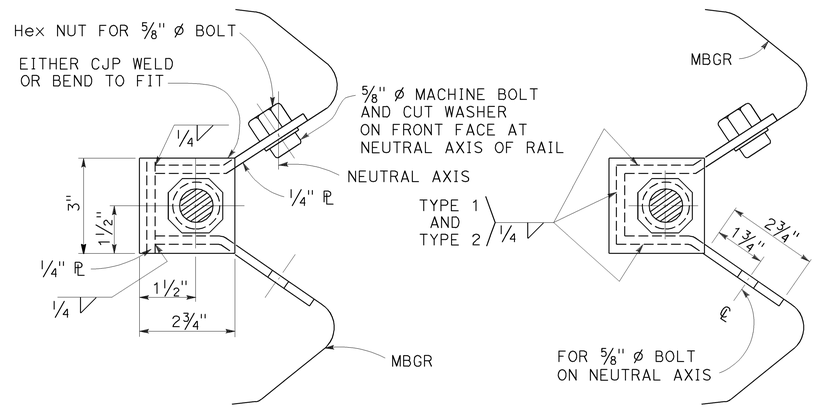

NOTE:
Dimensioning applies to both types.

SECTION A-A
(ALTERNATIVE TYPE 1)

SECTION A-A
(ALTERNATIVE TYPE 2)

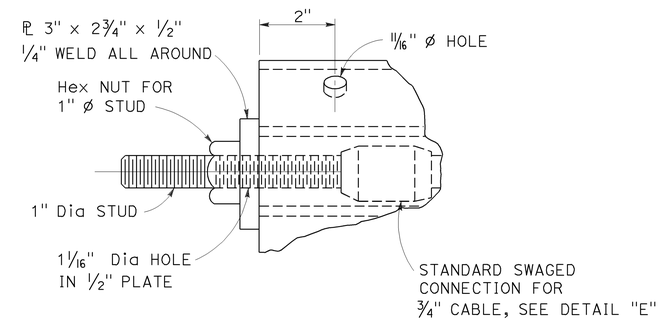

DETAIL "D"

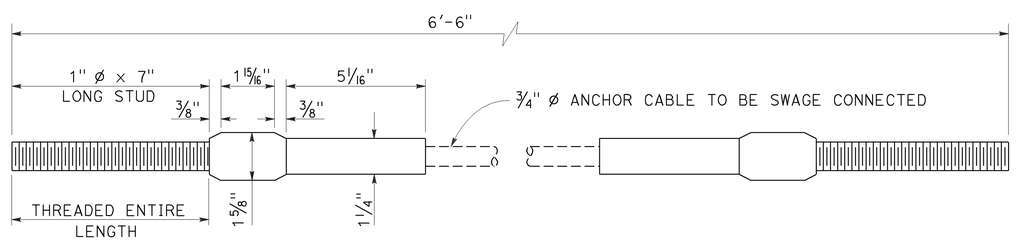

ANCHOR CABLE WITH
SWAGED FITTING AND STUD
DETAIL "E"

STATE OF CALIFORNIA
DEPARTMENT OF TRANSPORTATION

METAL RAILING ANCHOR CABLE AND ANCHOR PLATE DETAILS

NO SCALE

RSP A77S3 DATED JULY 19, 2013 SUPPLEMENTS THE STANDARD PLANS BOOK DATED 2010.

REVISED STANDARD PLAN RSP A77S3

7-3-13

Dist	COUNTY	ROUTE	POST MILES TOTAL PROJECT	SHEET No.	TOTAL SHEETS
08	SBd	40	R73.0/R89.0	32	36

Randell D. Hiatt
REGISTERED CIVIL ENGINEER

July 19, 2013
PLANS APPROVAL DATE

REGISTERED PROFESSIONAL ENGINEER
Randell D. Hiatt
No. C50200
Exp. 6-30-15
CIVIL
STATE OF CALIFORNIA

THE STATE OF CALIFORNIA OR ITS OFFICERS OR AGENTS SHALL NOT BE RESPONSIBLE FOR THE ACCURACY OR COMPLETENESS OF SCANNED COPIES OF THIS PLAN SHEET.

TO ACCOMPANY PLANS DATED 12-16-13

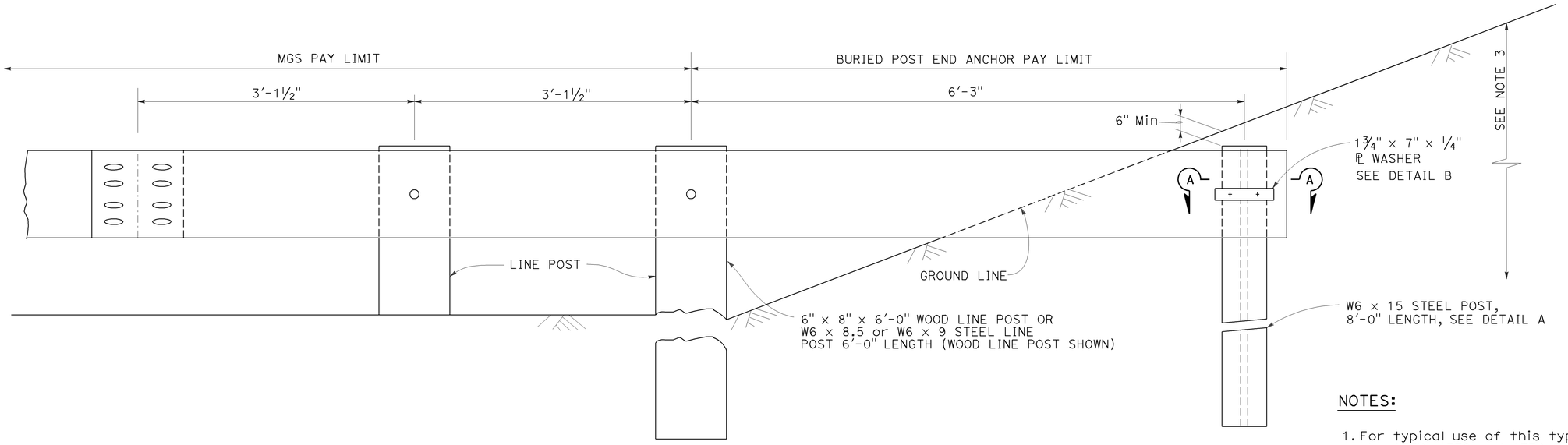

BURIED POST END ANCHOR

See Note 3

NOTES:

1. For typical use of this type of end anchor with MGS see the A77P, A77Q and A77R Series of the Standard Plans.
2. Holes excavation in the slope to construct the buried post end anchor shall be backfilled with selected earth, placed in layers approximately 1'-0" thick. Each layer shall be moistened and thoroughly compacted.
3. The buried post end anchor shall only be constructed at those locations where the slope perpendicular to the roadway is non-traversable.

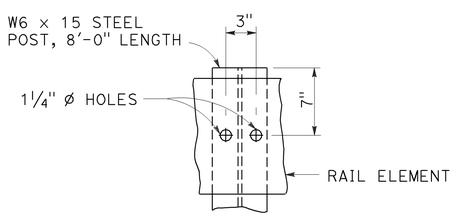

DETAIL A

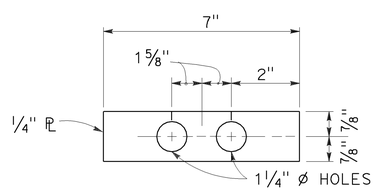

DETAIL B

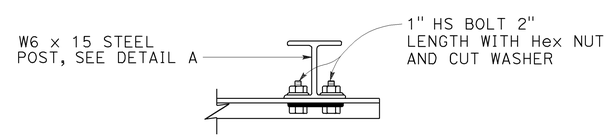

SECTION A-A

STATE OF CALIFORNIA
DEPARTMENT OF TRANSPORTATION

MIDWEST GUARDRAIL SYSTEM BURIED POST END ANCHOR

NO SCALE

RSP A77T2 DATED JULY 19, 2013 SUPPLEMENTS THE STANDARD PLANS BOOK DATED 2010.

REVISED STANDARD PLAN RSP A77T2

2010 REVISED STANDARD PLAN RSP A77T2

7-3-13

Dist	COUNTY	ROUTE	POST MILES TOTAL PROJECT	SHEET No.	TOTAL SHEETS
08	SBd	40	R73.0/R89.0	33	36

Randell D. Hiatt
REGISTERED CIVIL ENGINEER

July 19, 2013
PLANS APPROVAL DATE

REGISTERED PROFESSIONAL ENGINEER
Randell D. Hiatt
No. C50200
Exp. 6-30-15
CIVIL
STATE OF CALIFORNIA

THE STATE OF CALIFORNIA OR ITS OFFICERS OR AGENTS SHALL NOT BE RESPONSIBLE FOR THE ACCURACY OR COMPLETENESS OF SCANNED COPIES OF THIS PLAN SHEET.

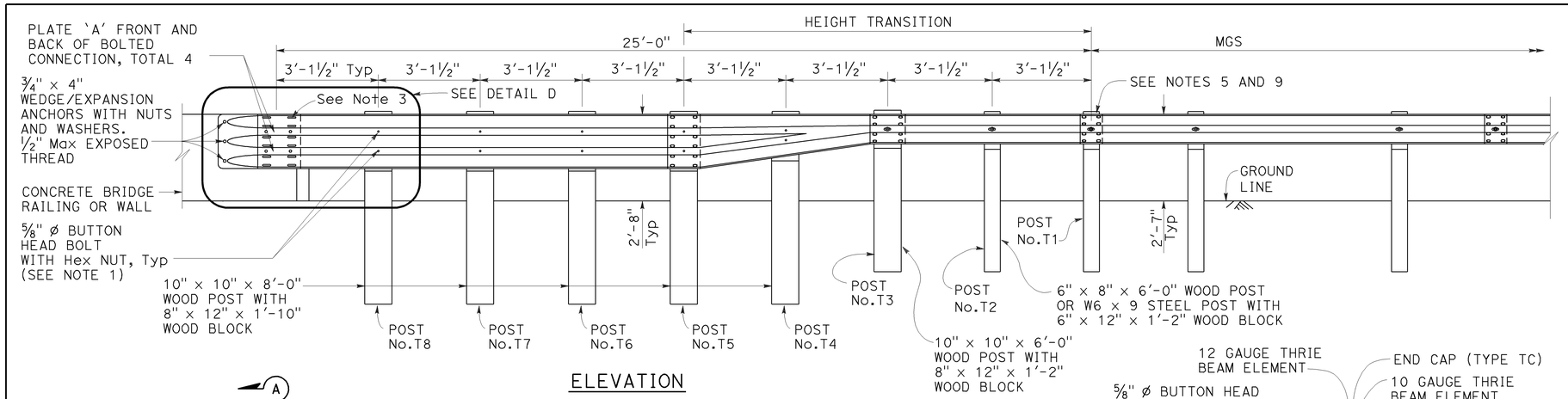

ELEVATION

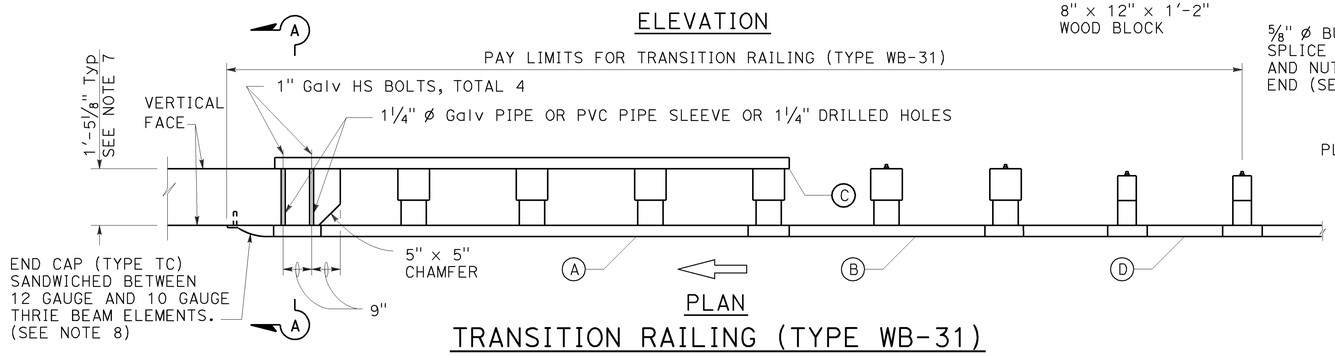

PLAN

TRANSITION RAILING (TYPE WB-31)

(No Blockout Attachment)

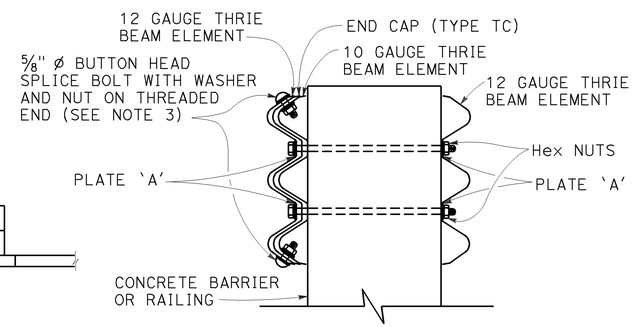

SECTION A-A

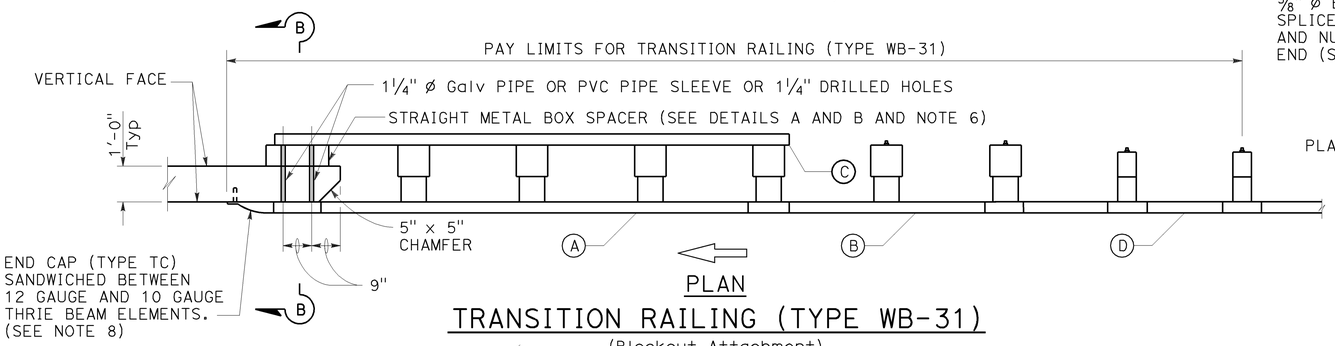

PLAN

TRANSITION RAILING (TYPE WB-31)

(Blockout Attachment)

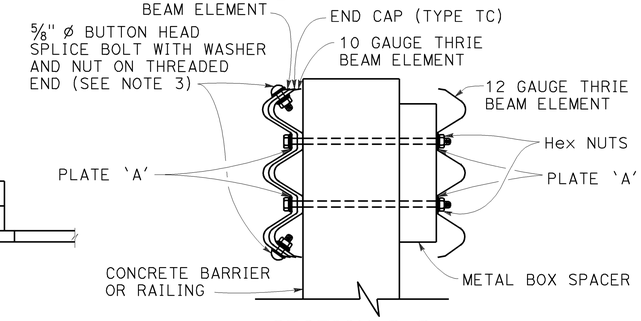

SECTION B-B

NOTES:

TO ACCOMPANY PLANS DATED 12-16-13

1. Use 5/8" Ø Button head bolts and hex nuts for connections to posts. No washer on rail face for bolted connections to post.
2. The nested rail elements, end cap, and 'W' beam to thrie beam element may be spliced together prior to bolting the elements to the wood post and concrete barrier or railing.
3. Exterior splice bolt holes for rail element splices at Post No. T5 and the connection to the concrete barrier or railing shall be the standard 29/32" × 1 1/8" slot size. Interior splice bolt holes at these locations may be increased up to 1 1/4" Ø. Only the top 4 and the bottom 4 splice bolts with washers and nuts are required for rail splices at Post No. T5 and the connection to the concrete barrier or railing.
4. The top elevation of Posts No. T2 through No. T7 shall not project more than 1" above the top elevation of the rail element.
5. Typically, the railing connected to Transition Railing (Type WB-31) will be either standard railing section of MGS with height transition ratio of 150:1 or a Caltrans approved 31" end treatment attached to Post No. T1.
6. The depth of the metal box spacer varies from the 9 1/8" to 1 1/2" and is dependent on the width of the concrete railing or wall. The combined dimension for the depth of the metal box spacer plus the width of railing or wall is typically 21 1/8". Where the space between the backside of the concrete railing or wall and the rear thrie beam element is less than 1 1/2", metal plates similar to Plate 'A' are to be used as spacers.
7. Where the width of the concrete railing or wall is greater than 17 1/8", wood blocks are to be used to fill the space created between the backside of Posts No. T4 through No. T7 and the rear thrie beam element. These wood blocks shall be 8" in width and 1'-2" in length. The dimension between the front thrie beam element and the rear thrie beam element is to match the width of the concrete railing or wall.
8. End cap may be installed over 12 gauge and 10 gauge thrie beam elements where transition railing is installed on the departure end of bridge railing.
9. Conform standard railing section height to 31" at Post No. T1 using height transition ratio of 150:1.

LEGEND:

(A) NESTED THRIE BEAM ELEMENTS (ONE 12 GAUGE ELEMENT NESTED OVER ONE 10 GAUGE ELEMENT).

(B) ONE ASYMMETRICAL 10 GAUGE "W" BEAM TO THRIE BEAM ELEMENT.

(C) ONE 12 GAUGE THRIE BEAM ELEMENT.

(D) ONE 10 GAUGE "W" BEAM RAIL ELEMENT (7'-3 1/2" LENGTH)

10 GAUGE = 0.138" THICK
12 GAUGE = 0.108" THICK

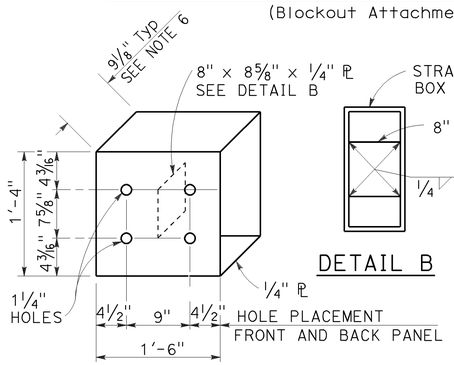

DETAIL A

STRAIGHT METAL BOX SPACER

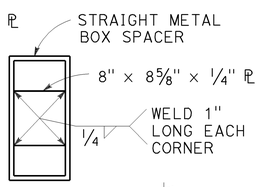

DETAIL B

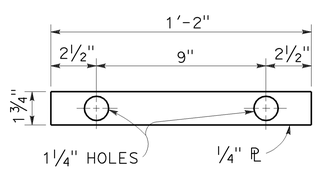

DETAIL C

PLATE 'A'

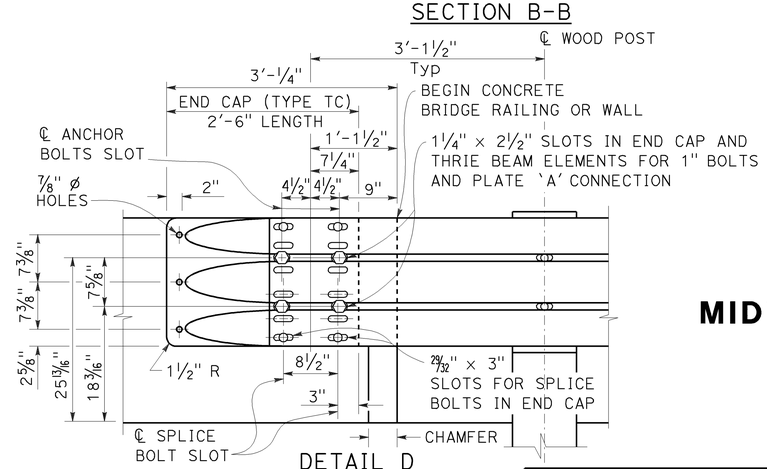

DETAIL D

STATE OF CALIFORNIA
DEPARTMENT OF TRANSPORTATION

MIDWEST GUARDRAIL SYSTEM TRANSITION RAILING (TYPE WB-31)

NO SCALE

RSP A77U4 DATED JULY 19, 2013 SUPPLEMENTS THE STANDARD PLANS BOOK DATED 2010.

REVISED STANDARD PLAN RSP A77U4

2010 REVISED STANDARD PLAN RSP A77U4

7-8-13

Dist	COUNTY	ROUTE	POST MILES TOTAL PROJECT	SHEET No.	TOTAL SHEETS
08	SBd	40	R73.0/R89.0	34	36

REGISTERED CIVIL ENGINEER

July 19, 2013
PLANS APPROVAL DATE

REGISTERED PROFESSIONAL ENGINEER
Michael Janzen
No. 44788
Exp. 03-31-14
CIVIL
STATE OF CALIFORNIA

THE STATE OF CALIFORNIA OR ITS OFFICERS OR AGENTS SHALL NOT BE RESPONSIBLE FOR THE ACCURACY OR COMPLETENESS OF SCANNED COPIES OF THIS PLAN SHEET.

TO ACCOMPANY PLANS DATED 12-16-13

2010 REVISED STANDARD PLAN RSP A87B

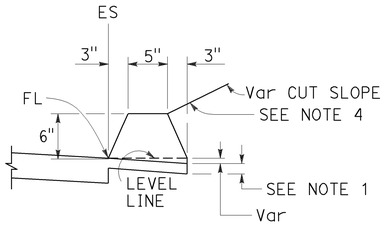

TYPE A
See Note 3

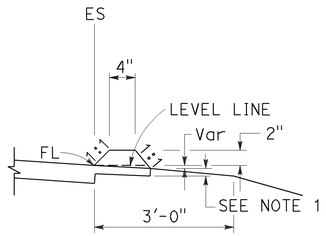

TYPE C

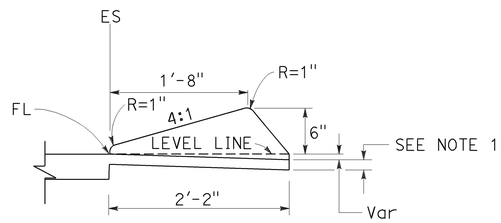

TYPE D

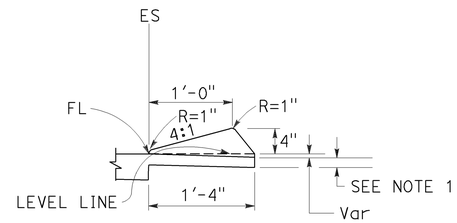

TYPE E

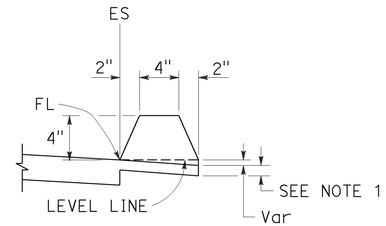

TYPE F
See Note 5

DIKES

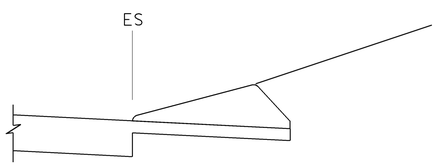

CASE C-1
Cut Slope

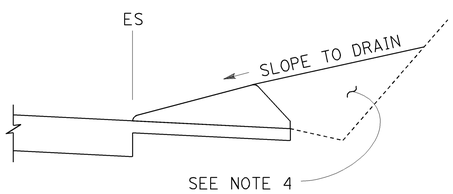

CASE C-2
Cut Slope

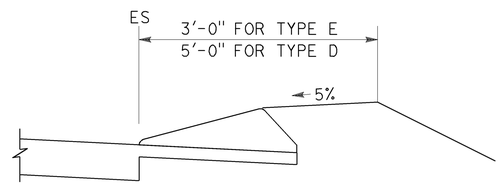

CASE F

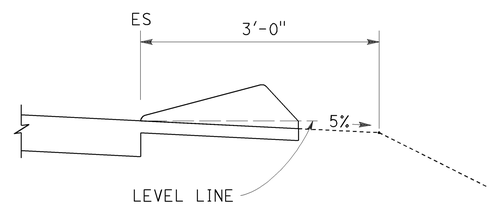

CASE R
See Note 2

TYPE D AND E BACKFILL DETAILS

NOTES:

1. For HMA shoulders only, extend top layer of HMA placed on the shoulder under dike with no joint at the ES. For projects with OGFC shoulders, do not extend OGFC under dike. See project plans for modified dike detail.
2. Case R applies to retrofit only projects where restrictive conditions do not provide enough width for Case F backfill.
3. Type A dike only to be used where restrictive slope conditions do not provide enough width to use Type D or Type E dike.
4. Fill and compact with excavated material to top of dike.
5. Use Type F dike, where dike is required with guard railing installations. See Revised Standard Plan RSP A77N4 for dike positioning details.

DIKE QUANTITIES

TYPE	CUBIC YARDS PER LINEAR FOOT
A	0.0135
C	0.0038
D	0.0293
E	0.0130
F	0.0066

Quantities based on 5% cross slope.

STATE OF CALIFORNIA
DEPARTMENT OF TRANSPORTATION

HOT MIX ASPHALT DIKES

NO SCALE

RSP A87B DATED JULY 19, 2013 SUPERSEDES STANDARD PLAN A87B
DATED MAY 20, 2011 - PAGE 120 OF THE STANDARD PLANS BOOK DATED 2010.

REVISED STANDARD PLAN RSP A87B

6-27-13

Dist	COUNTY	ROUTE	POST MILES TOTAL PROJECT	SHEET No.	TOTAL SHEETS
08	SBd	40	R73.0/R89.0	35	36

REGISTERED CIVIL ENGINEER

April 19, 2013
PLANS APPROVAL DATE

REGISTERED PROFESSIONAL ENGINEER Gurinderpal Bhullar No. C48815 Exp. 9-30-14 CIVIL STATE OF CALIFORNIA

THE STATE OF CALIFORNIA OR ITS OFFICERS OR AGENTS SHALL NOT BE RESPONSIBLE FOR THE ACCURACY OR COMPLETENESS OF SCANNED COPIES OF THIS PLAN SHEET.

TO ACCOMPANY PLANS DATED 12-16-13

NOTES:

See Revised Standard Plan RSP T9 for tables.

Use cone spacing X for taper segment, Y for tangent segment or Z for conflict situations, as approriate, per Table 1, unless X, Y, or Z cone spacing is shown on this sheet.

Unless otherwise specified in the special provisions, all temporary warning signs shall have black legend on fluorescent orange background.

California codes are designated by (CA). Otherwise, Federal (MUTCD) codes are shown.

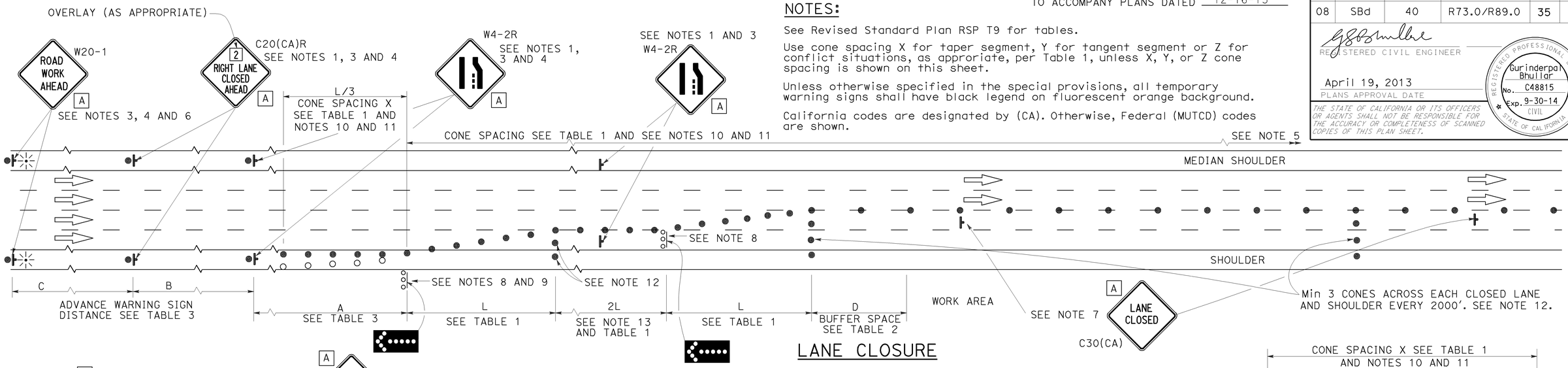

LANE CLOSURE

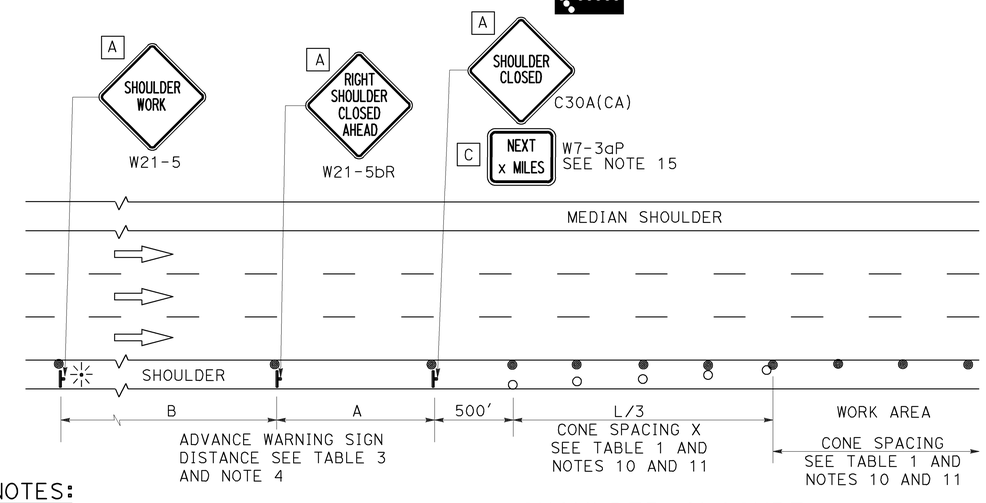

SHOULDER CLOSURE

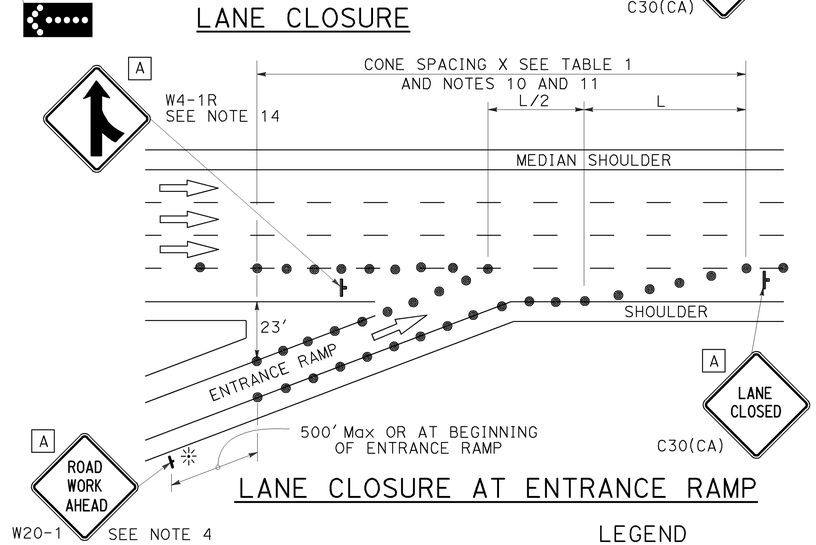

LANE CLOSURE AT ENTRANCE RAMP

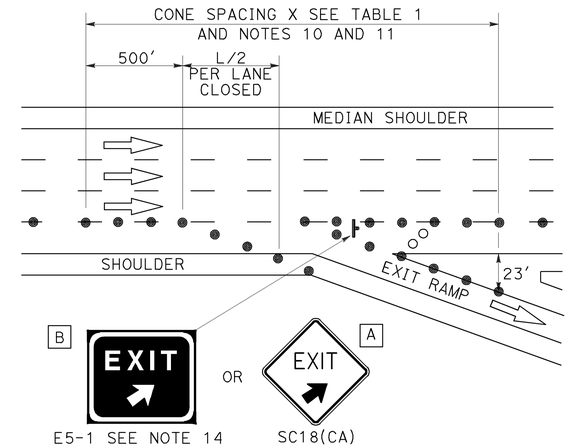

LANE CLOSURE AT EXIT RAMP

NOTES:

1. Median lane closures shall conform to the details as shown except that C20(CA)L and W4-2L signs shall be used.
2. At least one person shall be assigned to provide full time maintenance of traffic control devices for lane closures.
3. Duplicate sign installations are not required:
   a) On opposite shoulder if at least one-half of the available lanes remain open to traffic.
   b) In the median if the width of the median shoulder is less than 8' and the outside lanes are to be closed.
4. Each advance warning sign on each side of the roadway shall be equipped with at least two flags for daytime closure. Each flag shall be at least 16" x 16" in size and shall be orange or fluorescent red-orange in color. Flashing beacons shall be placed at the locations indicated for lane closure during hours of darkness.
5. A G20-2 "END ROAD WORK" sign, with minimum size of 48" x 24" as appropriate, shall be placed at the end of the lane closure unless the end of work area is obvious or ends within a larger project's limits.
6. If the W20-1 sign would follow within 2000' of a stationary W20-1 or G20-1 "ROAD WORK NEXT _____ MILES", use a C20(CA) sign for the first advance warning sign.
7. Place a C30(CA) sign every 2000' throughout length of lane closure.
8. One flashing arrow sign for each lane closed. The flashing arrow signs shall be Type I.
9. A minimum 1500' of sight distance shall be provided where possible for vehicles approaching the first flashing arrow sign. Lane closures shall not begin at top of crest vertical curve or on a horizontal curve.
10. All cones used for lane closures during the hours of darkness shall be fitted with retroreflective bands (or sleeves) as specified in the specifications.
11. Portable delineators, placed at one-half the spacing indicated for traffic cones may be used instead of cones for daytime closures only.
12. Unless otherwise specified in the special provisions, a minimum of 3 cones shall be placed transversely across each closed lane and shoulder at each location where a taper across a traffic lane ends and every 2000' as shown on the "Lane Closure" detail. Two Type II barricades may be used instead of the 3 cones. The transverse alignment of the cones or barricades on the closed shoulder may be shifted from the transverse alignment to provide access to the work.
13. Unless otherwise specified in the special provisions, the 2L tangent shown along lane lines shall be used between the L tapers required for each closed traffic lane.
14. Unless otherwise specified in the special provisions, the E5-1 or SC18(CA) and W4-1 signs shall be used as shown.
15. A W7-3aP "NEXT____ MILES" plaque must be used if theshoulder closure extends beyond the distance that can be perceived by road users.

LEGEND

- TRAFFIC CONE
- TRAFFIC CONE (OPTIONAL TAPER)
- TEMPORARY TRAFFIC CONTROL SIGN
- FLASHING ARROW SIGN (FAS)
- FAS SUPPORT OR TRAILER
- PORTABLE FLASHING BEACON

SIGN PANEL SIZE (Min)

A	48" x 48"
B	72" x 60"
C	36" x 30"

STATE OF CALIFORNIA
DEPARTMENT OF TRANSPORTATION

TRAFFIC CONTROL SYSTEM FOR LANE CLOSURE ON FREEWAYS AND EXPRESSWAYS

NO SCALE

RSP T10 DATED APRIL 19, 2013 SUPERSEDES STANDARD PLAN T10 DATED MAY 20, 2011 - PAGE 237 OF THE STANDARD PLANS BOOK DATED 2010.

REVISED STANDARD PLAN RSP T10

2010 REVISED STANDARD PLAN RSP T10

12-18-12

Dist	COUNTY	ROUTE	POST MILES TOTAL PROJECT	SHEET No.	TOTAL SHEETS
08	SBd	40	R73.0/R89.0	36	36

REGISTERED CIVIL ENGINEER

April 19, 2013
PLANS APPROVAL DATE

REGISTERED PROFESSIONAL ENGINEER Gurinderpal Bhullar No. C48815 Exp. 9-30-14 CIVIL STATE OF CALIFORNIA

THE STATE OF CALIFORNIA OR ITS OFFICERS OR AGENTS SHALL NOT BE RESPONSIBLE FOR THE ACCURACY OR COMPLETENESS OF SCANNED COPIES OF THIS PLAN SHEET.

TO ACCOMPANY PLANS DATED 12-16-13

TYPICAL RAMP CLOSURES

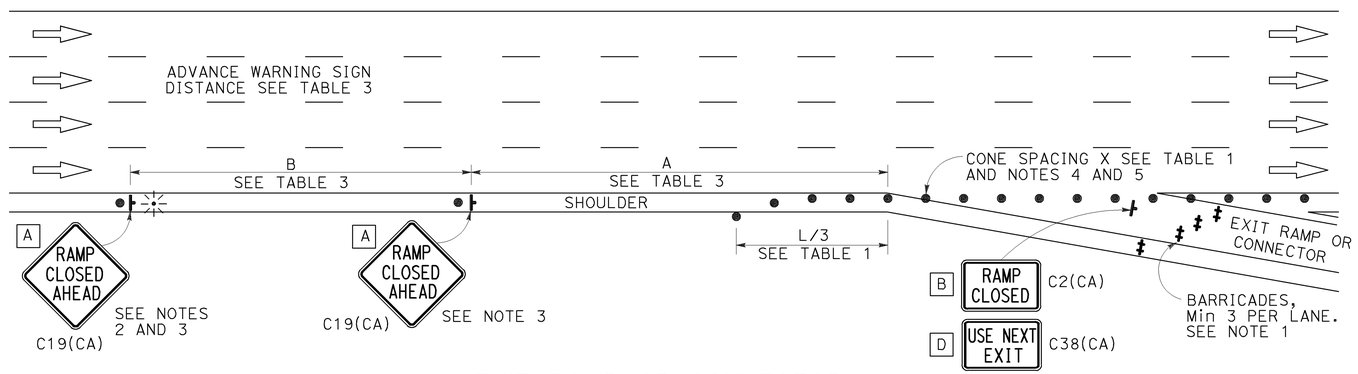

EXIT RAMP OR CONNECTOR

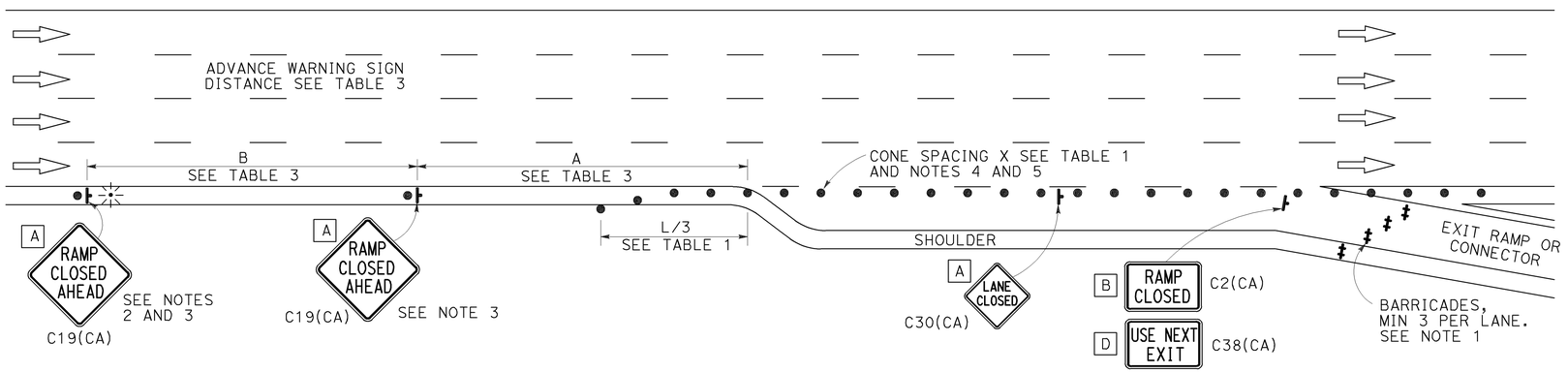

EXIT RAMP OR CONNECTOR WITH ADDITIONAL LANE

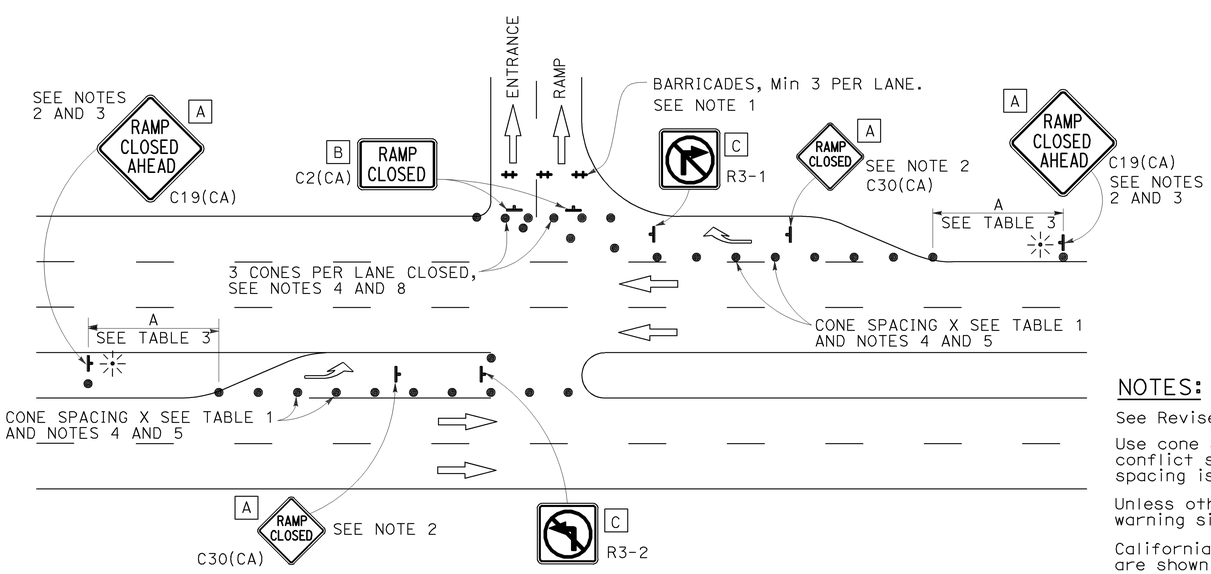

ENTRANCE RAMP WITH TURNING POCKETS

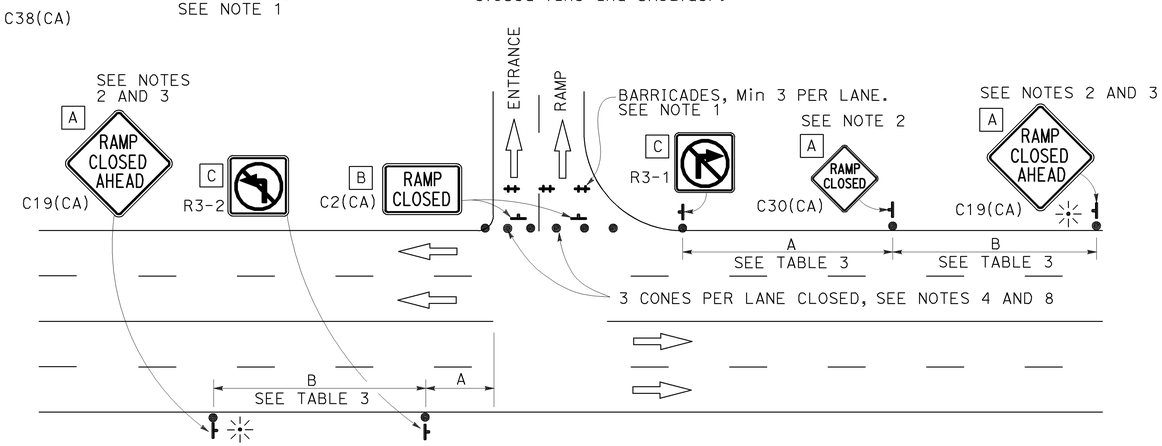

ENTRANCE RAMP WITHOUT TURNING POCKETS

SIGN PANEL SIZE (Min)

- A 48" × 48"
- B 48" × 30"
- C 36" × 36"
- D 48" × 36"

LEGEND

- TRAFFIC CONE
- TEMPORARY TRAFFIC CONTROL SIGN
- BARRICADES
- PORTABLE FLASHING BEACON

NOTES:

1. Barricades shall be Type I, II, or III for closures lasting one week or less and Type III for closures lasting longer than one week.
2. In addition to placing the C19(CA) "RAMP CLOSED AHEAD" and C30(CA) "RAMP CLOSED" signs, black on orange overlay plates with the word "CLOSED" may be mounted, as directed by the Engineer, on all guide signs that refer to the closed ramp. The letter size on the overlay shall be the same as the guide sign.
3. Each advance C19(CA) "RAMP CLOSED AHEAD" sign shall be equipped with at least two flags for daytime closure. Each flag shall be at least 16" × 16" in size and shall be orange or fluorescent red-orange in color. A flashing beacon shall be placed on top of the first C19(CA) sign during hours of darkness.
4. All cones used for ramp closures during the hours of darkness shall be fitted with retroreflective bands (or sleeves) as specified in the specifications.
5. Portable delineators, placed at one-half the spacing indicated for traffic cones, may be used instead of cones for daytime ramp closures only.
6. At least one person shall be assigned to provide full time maintenance of traffic control devices, unless otherwise directed by the Engineer.
7. The existing "EXIT" signs shall be covered during ramp closures.
8. A minimum of 3 cones shall be placed transversely across each closed lane and shoulder.

NOTES:

See Revised Standard Plan RSP T9 for tables.

Use cone spacing X for taper segment, Y for tangent segment or Z for conflict situations, as approriate, per Table 1, unless X, Y, or Z cone spacing is shown on this sheet.

Unless otherwise specified in the special provisions, all temporary warning signs shall have black legend on fluorescent orange background.

California codes are designated by (CA). Otherwise, Federal (MUTCD) codes are shown.

STATE OF CALIFORNIA
DEPARTMENT OF TRANSPORTATION

TRAFFIC CONTROL SYSTEM FOR RAMP CLOSURE

NO SCALE

RSP T14 DATED APRIL 19, 2013 SUPERSEDES STANDARD PLAN T14
DATED MAY 20, 2011 - PAGE 242 OF THE STANDARD PLANS BOOK DATED 2010.

REVISED STANDARD PLAN RSP T14

2010 REVISED STANDARD PLAN RSP T14

12-18-12