ACIM-040-2(058)E

Dist	COUNTY	ROUTE	POST MILES TOTAL PROJECT	SHEET No.	TOTAL SHEETS
08	SBd	40	R119.0/R138.3	1	29

STATE OF CALIFORNIA
DEPARTMENT OF TRANSPORTATION

PROJECT PLANS FOR CONSTRUCTION ON
STATE HIGHWAY
IN SAN BERNARDINO COUNTY
NEAR NEEDLES
FROM 0.5 MILE WEST OF TANK TOWER DITCH
TO BUZZARD WASH

TO BE SUPPLEMENTED BY STANDARD PLANS DATED MAY 2010

INDEX OF PLANS

SHEET No.	DESCRIPTION
1	TITLE AND LOCATION MAP
2-3	TYPICAL CROSS SECTIONS
4-11	CONSTRUCTION DETAILS
12	CONSTRUCTION AREA SIGNS
13-16	DETOUR PLANS
17-18	PAVEMENT DELINEATION DETAILS
19-22	PAVEMENT DELINEATION QUANTITIES
23-26	SUMMARY OF QUANTITIES
27	ELECTRICAL PLANS
28-29	REVISED STANDARD PLANS

THE STANDARD PLANS LIST APPLICABLE TO THIS CONTRACT IS INCLUDED IN THE NOTICE TO BIDDERS AND SPECIAL PROVISIONS BOOK

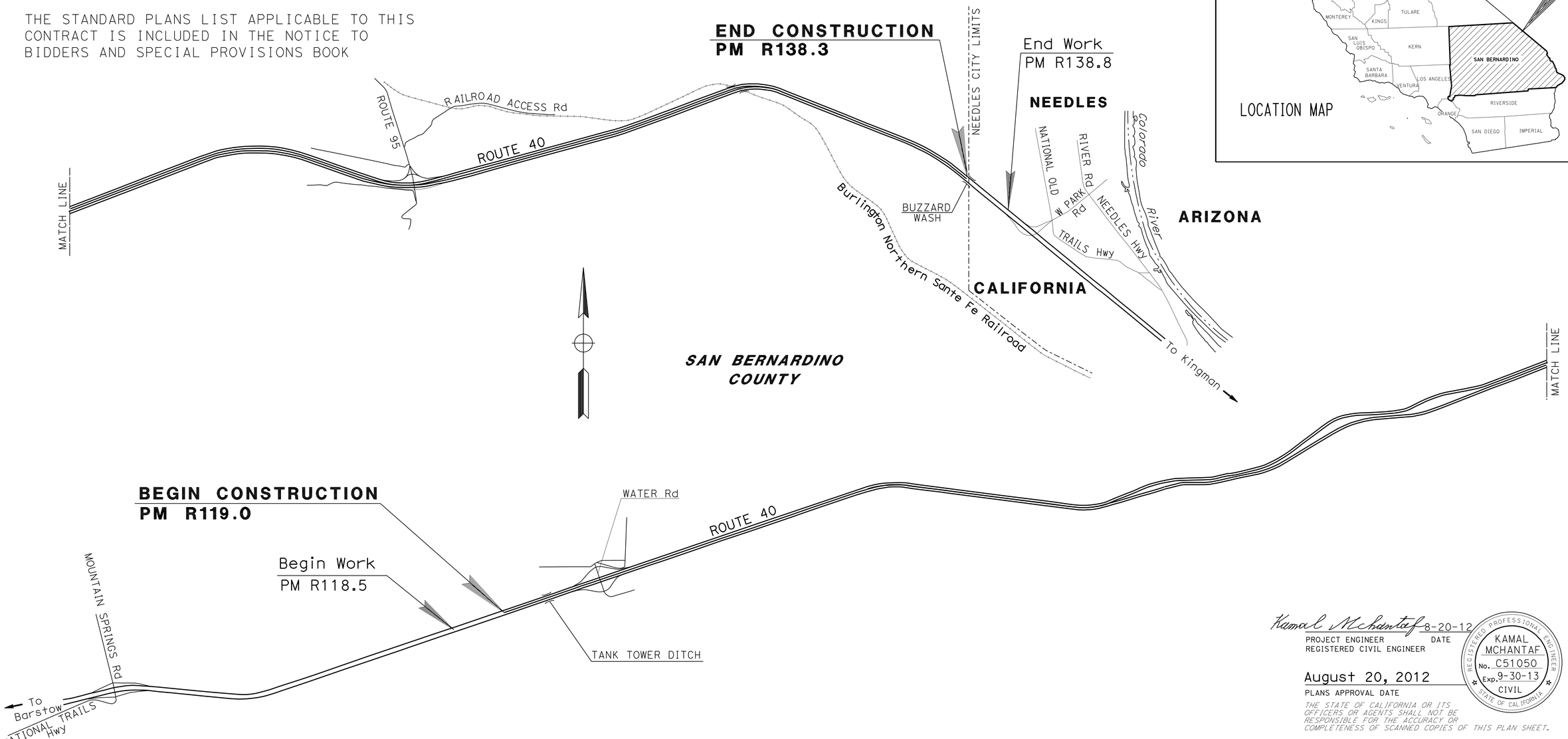

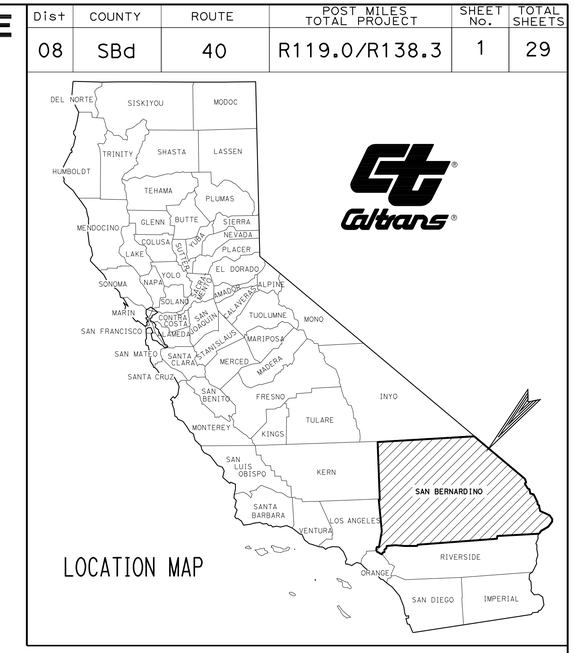

LOCATION MAP

NO SCALE

THE CONTRACTOR SHALL POSSESS THE CLASS (OR CLASSES) OF LICENSE AS SPECIFIED IN THE "NOTICE TO BIDDERS."

Kamal Mchantaf 8-20-12
PROJECT ENGINEER REGISTERED CIVIL ENGINEER — DATE

August 20, 2012
PLANS APPROVAL DATE

REGISTERED PROFESSIONAL ENGINEER — KAMAL MCHANTAF — No. C51050 — Exp. 9-30-13 — CIVIL — STATE OF CALIFORNIA

THE STATE OF CALIFORNIA OR ITS OFFICERS OR AGENTS SHALL NOT BE RESPONSIBLE FOR THE ACCURACY OR COMPLETENESS OF SCANNED COPIES OF THIS PLAN SHEET.

PROJECT MANAGER: MOHAMMAD MOLLAZADEH
DESIGN ENGINEER: KAMAL MCHANTAF

CONTRACT No.	08-0K2704
PROJECT ID	0800020492

LAST REVISION 08-20-12 — DATE PLOTTED => 28-AUG-2012 — TIME PLOTTED => 13:39

Dist	COUNTY	ROUTE	POST MILES TOTAL PROJECT	SHEET No.	TOTAL SHEETS
08	SBd	40	R119.0/R138.3	2	29

Kamal Mchantaf 8-20-12
REGISTERED CIVIL ENGINEER DATE

8-20-12
PLANS APPROVAL DATE

REGISTERED PROFESSIONAL ENGINEER KAMAL MCHANTAF No. C51050 Exp. 9-30-13 CIVIL STATE OF CALIFORNIA

THE STATE OF CALIFORNIA OR ITS OFFICERS OR AGENTS SHALL NOT BE RESPONSIBLE FOR THE ACCURACY OR COMPLETENESS OF SCANNED COPIES OF THIS PLAN SHEET.

NOTES:

1. DIMENSIONS OF STRUCTURAL SECTIONS ARE SUBJECT TO TOLERANCES SPECIFIED IN THE STANDARD SPECIFICATIONS.
2. SUPERELEVATION AS SHOWN OR AS DIRECTED BY THE ENGINEER.
3. NO SURFACING, COLD PLANING, OR FOG SEAL SHALL BE ALLOWED ON APPROACH SLABS AND ON BRIDGE STRUCTURES.
4. EXISTING UTILITY FACILITIES HAVE NOT BEEN PLOTTED ON THESE PLANS.
5. EXISTING STRUCTURAL SECTIONS NOT SHOWN.
6. CENTERLINE, LANE WIDTH AND SHOULDER WIDTH SHOWN ARE APPROXIMATE.
7. SEE SHEET C-6 FOR PAVEMENT CONFORM DETAILS.
8. SEE SHEET Q-1 AND Q-2 FOR LOCATIONS, TYPES AND QUANTITIES OF SALVAGE AND CONSTRUCTION OF MBGR, TERMINAL SYSTEMS, END CAPS, CRASH CUSHIONS AND TRANSITION RAILING.
9. SEE QUANTITY SHEET Q-3 AND Q-4 FOR LOCATIONS, TYPES AND QUANTITIES OF REMOVAL AND CONSTRUCTION OF AC DIKES, COLD PLANE AND PAVEMENTS.

LEGEND:

1. SEAL COAT (RUBBERIZED)
2. 0.10′ RHMA-G
3. 0.25′ COLD PLANE
   0.25′ HMA-C
4. 0.40′ COLD PLANE
   0.40′ HMA-C
5. 0.15′ COLD PLANE
   0.15′ RHMA-G
6. 0.90′ JPCPRSC
   PLASTIC POLYETHYLENE BOND BREAKER
   0.40′ LCBRS

ABBREVIATION:

RHMA-G RUBBERIZED HOT MIX ASPHALT (GAP GRADED)
JPCPRSC - JOINTED PLAIN CONCRETE PAVEMENT (RAMP TERMINI RAPID STRENGTH CONCRETE)
LCBRS - LEAN CONCRETE BASE RAPID SETTING

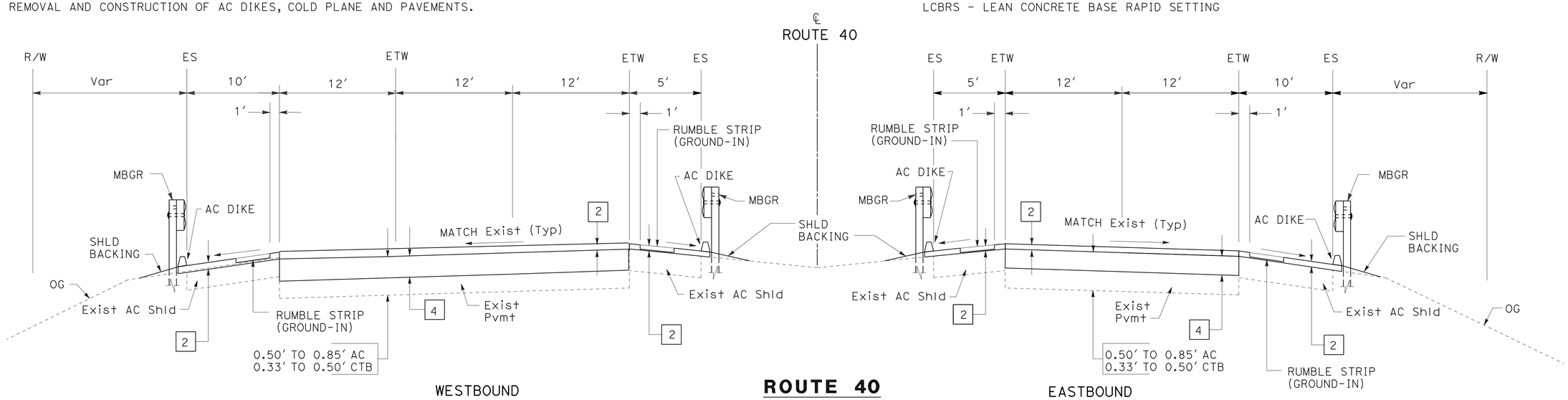

ROUTE 40
PM R124.5 TO PM R131.6

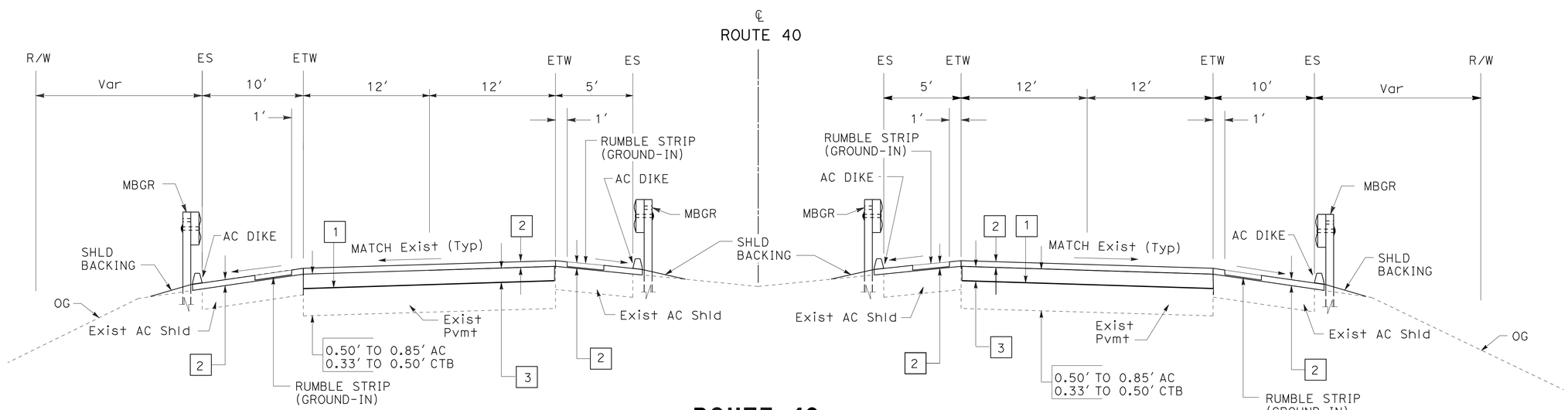

ROUTE 40
PM R119.0 TO PM R124.5

TYPICAL CROSS SECTIONS
NO SCALE

X-1

STATE OF CALIFORNIA - DEPARTMENT OF TRANSPORTATION
Caltrans® MAINTENANCE DESIGN

FUNCTIONAL SUPERVISOR: MICHAEL RISTIC
CALCULATED-DESIGNED BY: KAMAL MCHANTAF
CHECKED BY: MICHAEL RISTIC
REVISED BY
DATE REVISED

LAST REVISION 08-20-12
DATE PLOTTED => 28-AUG-2012
TIME PLOTTED => 13:39

Dist	COUNTY	ROUTE	POST MILES TOTAL PROJECT	SHEET No.	TOTAL SHEETS
08	SBd	40	R119.0/R138.3	3	29

Kamal Mchantaf 8-20-12
REGISTERED CIVIL ENGINEER DATE

8-20-12
PLANS APPROVAL DATE

REGISTERED PROFESSIONAL ENGINEER
KAMAL MCHANTAF
No. C51050
Exp. 9-30-13
CIVIL
STATE OF CALIFORNIA

THE STATE OF CALIFORNIA OR ITS OFFICERS OR AGENTS SHALL NOT BE RESPONSIBLE FOR THE ACCURACY OR COMPLETENESS OF SCANNED COPIES OF THIS PLAN SHEET.

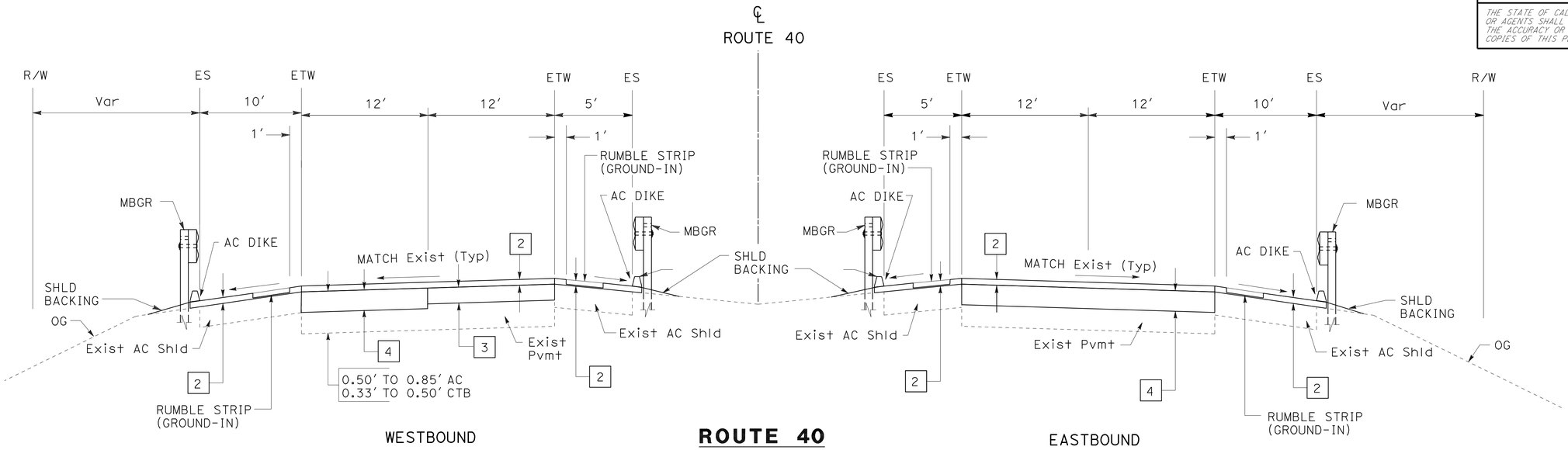

ROUTE 40
PM R131.6 TO PM R138.3

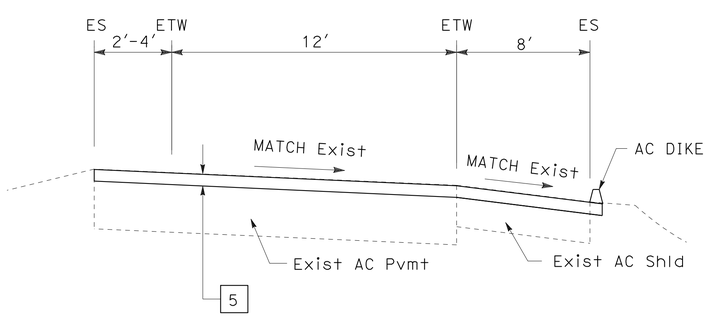

ROUTE 40 RAMPS
WATER RD EASTBOUND EXIT RAMP
WATER RD EASTBOUND ENTRANCE RAMP
WATER RD WESTBOUND EXIT RAMP
WATER RD WESTBOUND ENTRANCE RAMP

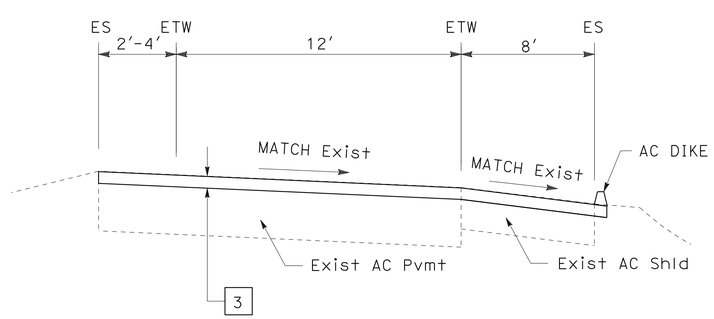

ROUTE 40 RAMPS
RTE 95 EASTBOUND EXIT RAMP
RTE 95 EASTBOUND ENTRANCE RAMP
RTE 95 WESTBOUND EXIT RAMP
RTE 95 WESTBOUND ENTRANCE RAMP

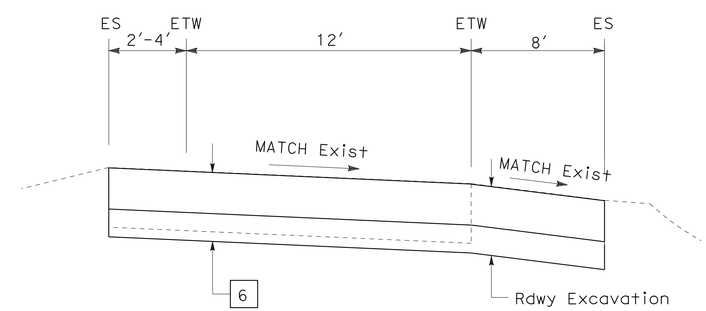

ROUTE 40 EXIT RAMP CONCRETE TERMINI
RTE 95 EASTBOUND EXIT RAMP

TYPICAL CROSS SECTIONS
NO SCALE

X-2

STATE OF CALIFORNIA - DEPARTMENT OF TRANSPORTATION
Caltrans® MAINTENANCE DESIGN

FUNCTIONAL SUPERVISOR: MICHAEL RISTIC
CALCULATED-DESIGNED BY: KAMAL MCHANTAF
CHECKED BY: MICHAEL RISTIC
REVISED BY
DATE REVISED

LAST REVISION 08-20-12
DATE PLOTTED => 28-AUG-2012
TIME PLOTTED => 13:39

Dist	COUNTY	ROUTE	POST MILES TOTAL PROJECT	SHEET No.	TOTAL SHEETS
08	SBd	40	R119.0/R138.3	4	29

Kamal Mchantaf 8-20-12
REGISTERED CIVIL ENGINEER DATE

8-20-12
PLANS APPROVAL DATE

REGISTERED PROFESSIONAL ENGINEER
KAMAL MCHANTAF
No. C51050
Exp. 9-30-13
CIVIL
STATE OF CALIFORNIA

THE STATE OF CALIFORNIA OR ITS OFFICERS OR AGENTS SHALL NOT BE RESPONSIBLE FOR THE ACCURACY OR COMPLETENESS OF SCANNED COPIES OF THIS PLAN SHEET.

NOTES:

1. SEE SHEETS Q-1 AND Q-2 FOR LOCATIONS, TYPES, AND QUANTITIES.
2. SEE STANDARD PLANS FOR DETAILS NOT SHOWN.
3. SEE SHEETS C-2 TO C-4 FOR THRIE BEAM CONNECTION DETAILS.

LEGEND:

⇨ DIRECTION OF TRAFFIC

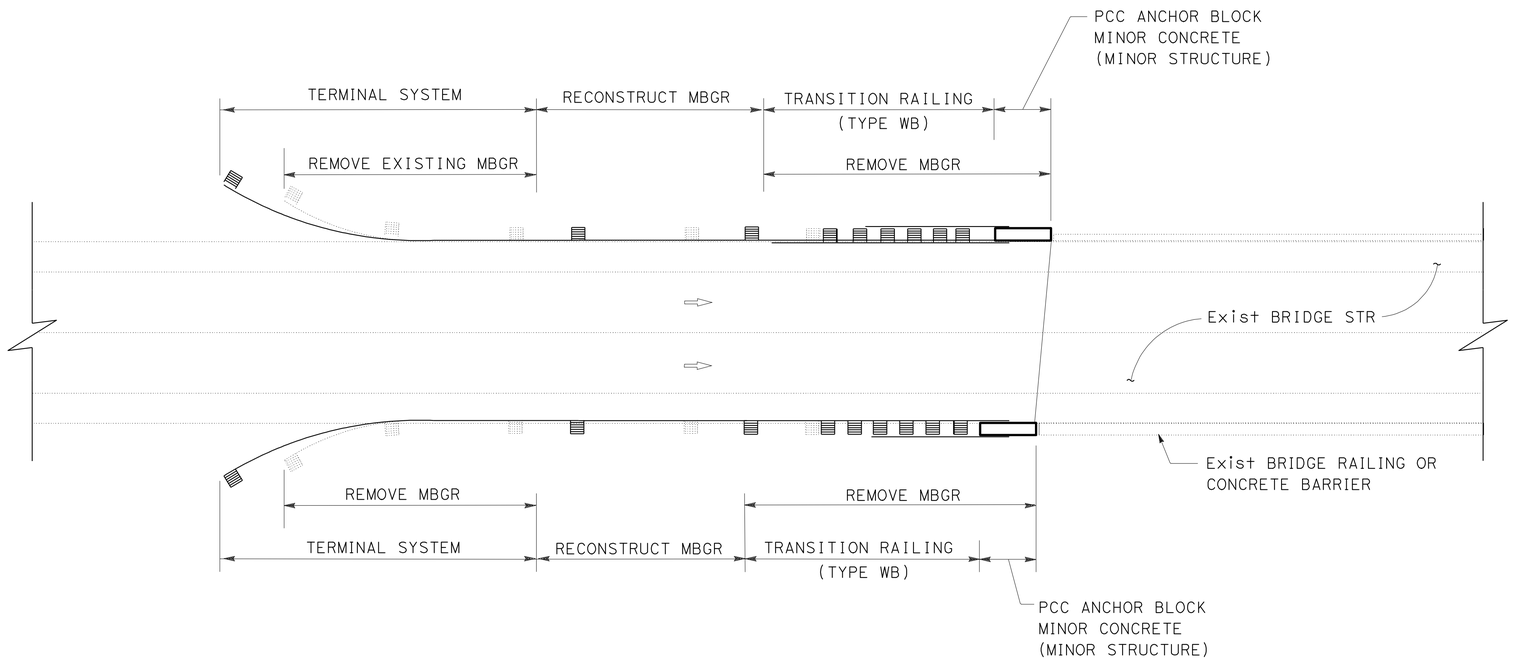

TYPICAL MBGR-BRIDGE CONNECTION

CONSTRUCTION DETAILS

NO SCALE

C-1

STATE OF CALIFORNIA - DEPARTMENT OF TRANSPORTATION
Caltrans® MAINTENANCE DESIGN

FUNCTIONAL SUPERVISOR: MICHAEL RISTIC
CALCULATED-DESIGNED BY: KAMAL MCHANTAF
CHECKED BY: MICHAEL RISTIC
REVISED BY
DATE REVISED

LAST REVISION 08-20-12
DATE PLOTTED => 28-AUG-2012
TIME PLOTTED => 13:39

Dist	COUNTY	ROUTE	POST MILES TOTAL PROJECT	SHEET No.	TOTAL SHEETS
08	SBd	40	R119.0/R138.3	5	29

Kamal Mchantaf 8-20-12
REGISTERED CIVIL ENGINEER DATE

8-20-12
PLANS APPROVAL DATE

REGISTERED PROFESSIONAL ENGINEER KAMAL MCHANTAF No. C51050 Exp. 9-30-13 CIVIL STATE OF CALIFORNIA

THE STATE OF CALIFORNIA OR ITS OFFICERS OR AGENTS SHALL NOT BE RESPONSIBLE FOR THE ACCURACY OR COMPLETENESS OF SCANNED COPIES OF THIS PLAN SHEET.

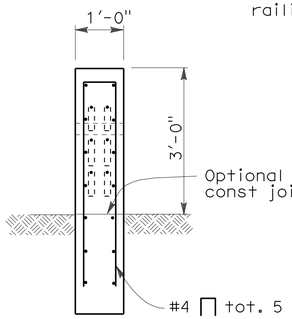

SECTION A-A

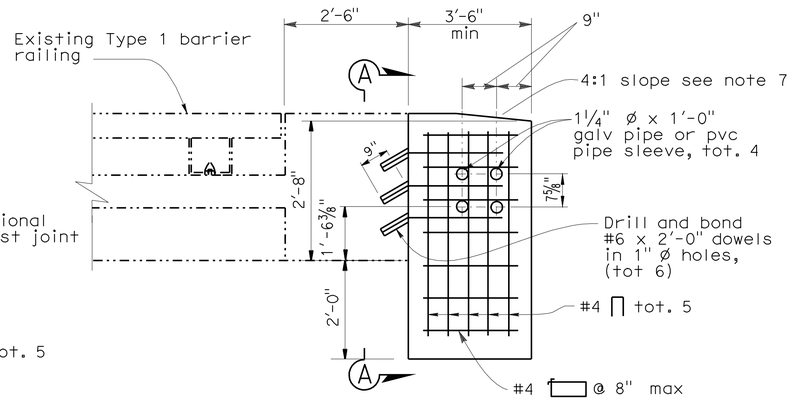

ELEVATION
TYPE 1

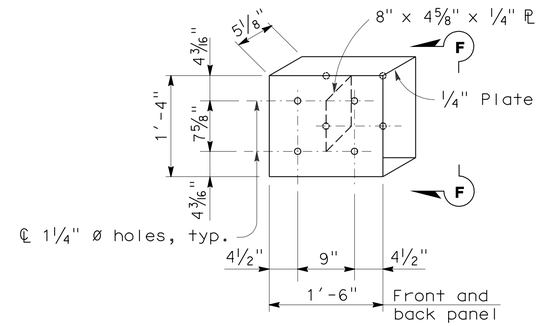

DETAIL E

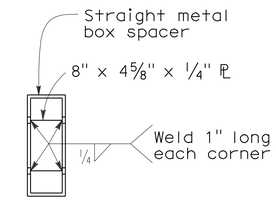

VIEW F-F

TYPICAL SECTION
(TYPE 1 BARRIER)

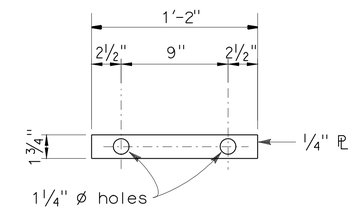

DETAIL G

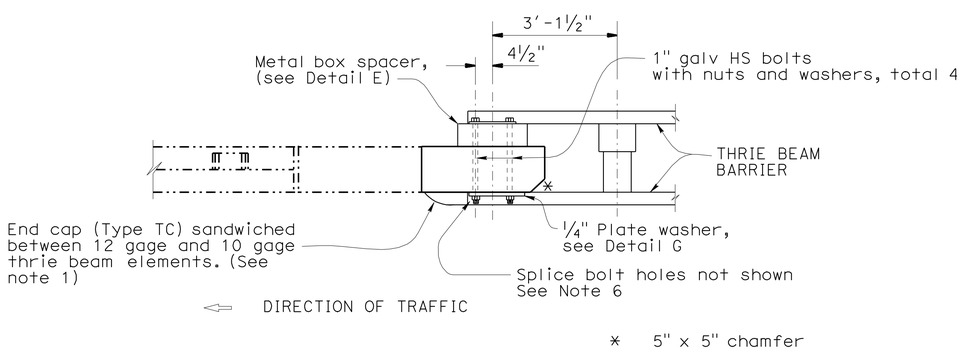

PLAN

THRIE BEAM CONNECTION DETAILS
BARRIER RAILING TYPE 1

NOTES:

1. FOR DETAILS NOT SHOWN, SEE STANDARD PLANS.
2. DEPENDENT DIMENSIONS WILL BE VERIFIED IN THE FIELD BEFORE FABRICATING ANY END CONNECTION TO CONFORM WITH EXISTING PAVED CONDITIONS.
3. WHEN END SECTION IS CALLED FOR, MODIFY TYPICAL TERMINAL SECTION TO FIT. SEE DETAIL E
4. ALL PLATES AND BOLTS ARE GALVANIZED.
5. CUT AND REMOVE PORTION OF TYPE 1, 2 AND BAGR AS REQUIRED.
6. EXTERIOR SPLICE BOLT HOLES SHALL BE THE STANDARD ⅞" X 1⅛"SLOT SIZE FOR RAIL SPLICES AT POST #T4 AND THE CONNECTION TO THE CONCRETE BARRIER OR RAILING. INTERIOR SPLICE BOLT HOLES MAY BE INCREASED UP TO 1¼" DIA. WASHERS SHALL BE USED WITH SPLICE BOLTS ON BACK SIDE OF RAIL ELEMENT AT POST #T4 AND CONNECTION TO THE CONCRETE BARRIER OR RAILING.
7. TAPER THE TOP OF THE END OF THE BRIDGE RAILING AT 4:1 TO MATCH THE TOP ELEVATION OF THE THRIE BEAM RAIL ELEMENT.

CONSTRUCTION DETAILS
NO SCALE **C-2**

STATE OF CALIFORNIA - DEPARTMENT OF TRANSPORTATION
Caltrans® MAINTENANCE DESIGN
FUNCTIONAL SUPERVISOR: MICHAEL RISTIC
CALCULATED-DESIGNED BY: KAMAL MCHANTAF
CHECKED BY: MICHAEL RISTIC
REVISED BY / DATE REVISED

LAST REVISION 08-20-12
DATE PLOTTED => 28-AUG-2012
TIME PLOTTED => 13:39

Dist	COUNTY	ROUTE	POST MILES TOTAL PROJECT	SHEET No.	TOTAL SHEETS
08	SBd	40	R119.0/R138.3	6	29

Kamal Mchantaf 8-20-12
REGISTERED CIVIL ENGINEER DATE

8-20-12
PLANS APPROVAL DATE

REGISTERED PROFESSIONAL ENGINEER KAMAL MCHANTAF No. C51050 Exp. 9-30-13 CIVIL STATE OF CALIFORNIA

THE STATE OF CALIFORNIA OR ITS OFFICERS OR AGENTS SHALL NOT BE RESPONSIBLE FOR THE ACCURACY OR COMPLETENESS OF SCANNED COPIES OF THIS PLAN SHEET.

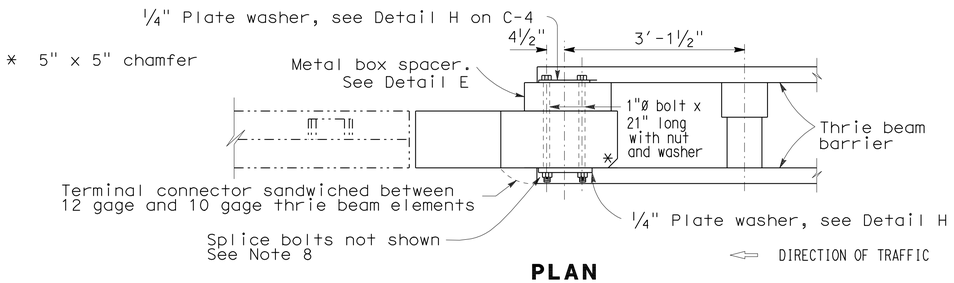

PLAN

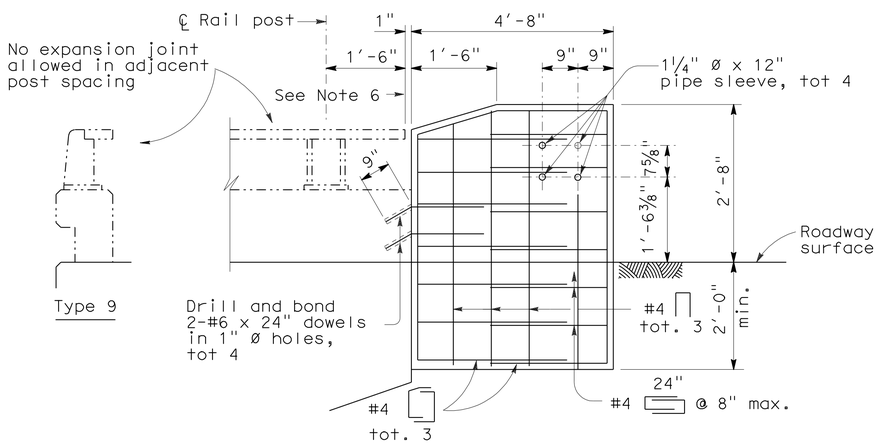

ELEVATION
EXISTING BARRIER RAILING TYPE 9
ALTERNATIVE 1

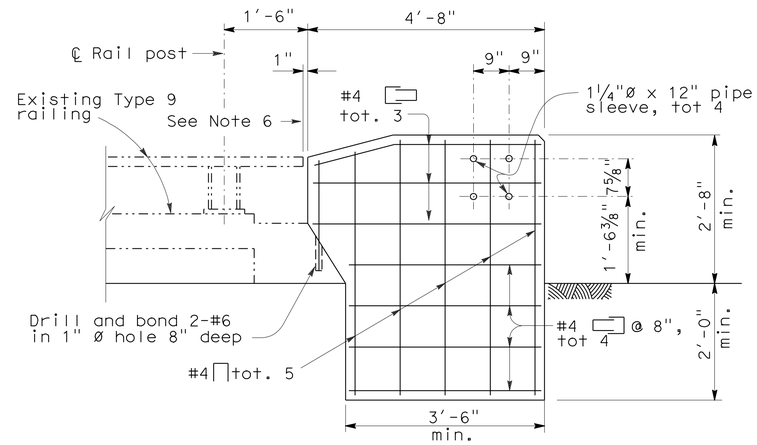

ELEVATION
EXISTING BARRIER RAILING TYPE 9
ALTERNATIVE 3

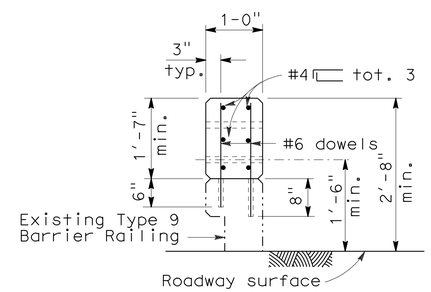

SECTION C-C

NOTES:

1. FOR DETAILS NOT SHOWN, SEE STANDARD PLANS.
2. DEPENDENT DIMENSIONS WILL BE VERIFIED IN THE FIELD BEFORE FABRICATING ANY END CONNECTION TO CONFORM WITH EXISTING PAVED CONDITIONS.
3. WHEN END SECTION IS CALLED FOR, MODIFY TYPICAL TERMINAL SECTION TO FIT. SEE DETAIL E SHEET 2.
4. FOR THRIE BEAM CONNECTION, SEE STANDARD PLANS "THRIE BEAM BARRIER CONNECTIONS TO BRIDGE RAILING".
5. ALL PLATES AND BOLTS ARE GALVANIZED.
6. CUT AND REMOVE THAT PORTION OF TYPE 9, 9-11 AND BAGR AS REQUIRED.
7. IF RAIL IS NOT CONTINUOUS OVER 2 POSTS, USE SPLICE AT EXPANSION JOINT.
8. EXTERIOR SPLICE BOLT HOLES SHALL BE THE STANDARD 7/8" X 1 1/8" SLOT SIZE FOR RAIL SPLICES AT POST # T4 AND THE CONNECTION TO THE CONCRETE BARRIER OR RAILING. INTERIOR SPLICE BOLT HOLES MAY BE INCREASED UP TO 1 1/8" DIA. WASHERS SHALL BE USED WITH SPLICE BOLTS ON BACK SIDE OF RAIL ELEMENT AT POST # T4 AND CONNECTION TO THE CONCRETE BARRIER OR RAILING.
9. TAPER THE TOP OF THE END OF THE BRIDGE RAILING AT 4:1 TO MATCH THE TOP ELEVATION OF THE THRIE BEAM RAIL ELEMENT.

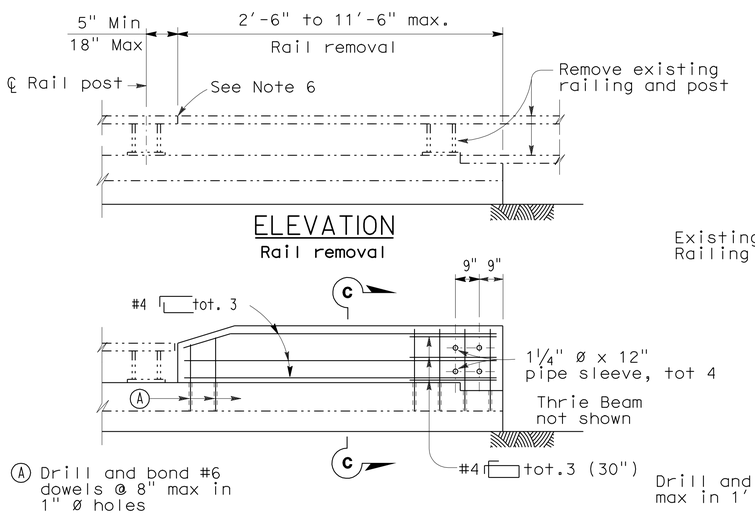

ELEVATION
New End Post
EXISTING BARRIER RAILING TYPE 9
ALTERNATIVE 2

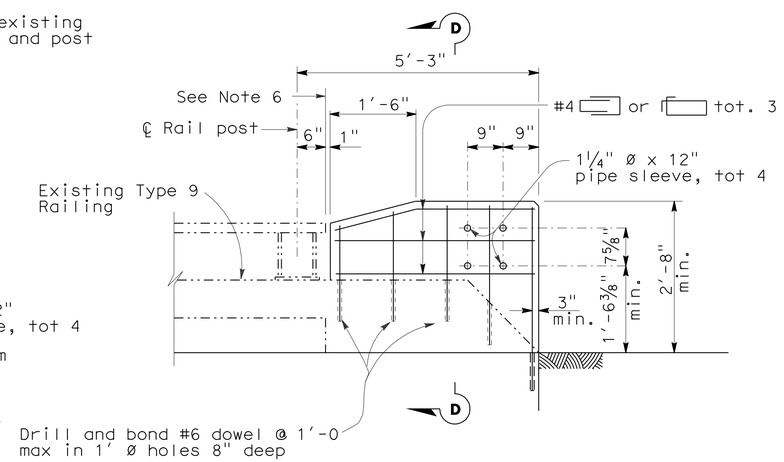

ELEVATION
EXISTING BARRIER RAILING TYPE 9
ALTERNATIVE 4

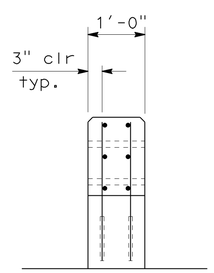

SECTION D-D

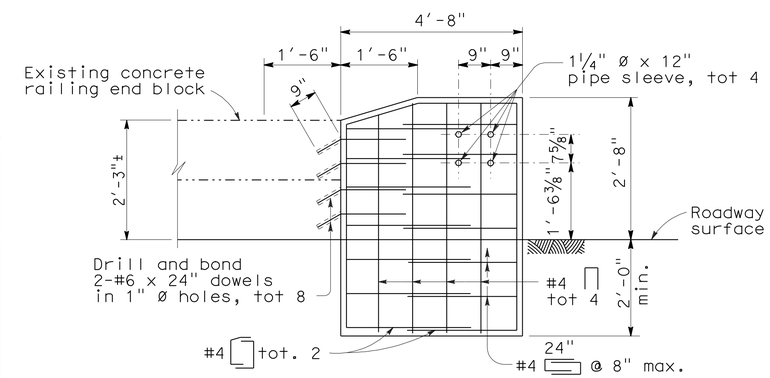

ELEVATION
EXISTING BARRIER RAILING TYPE 9
ALTERNATIVE 5

THRIE BEAM CONNECTION DETAILS
BARRIER RAILING TYPE 9

CONSTRUCTION DETAILS
NO SCALE

C-3

REVISED BY | DATE REVISED
KAMAL MCHANTAF | MICHAEL RISTIC
CALCULATED-DESIGNED BY | CHECKED BY
FUNCTIONAL SUPERVISOR: MICHAEL RISTIC
STATE OF CALIFORNIA - DEPARTMENT OF TRANSPORTATION
Caltrans MAINTENANCE DESIGN

LAST REVISION 08-20-12 | DATE PLOTTED => 28-AUG-2012 | TIME PLOTTED => 13:39

Dist	COUNTY	ROUTE	POST MILES TOTAL PROJECT	SHEET No.	TOTAL SHEETS
08	SBd	40	R119.0/R138.3	7	29

Kamal Mchantaf 8-20-12
REGISTERED CIVIL ENGINEER DATE

8-20-12
PLANS APPROVAL DATE

REGISTERED PROFESSIONAL ENGINEER
KAMAL MCHANTAF
No. C51050
Exp. 9-30-13
CIVIL
STATE OF CALIFORNIA

THE STATE OF CALIFORNIA OR ITS OFFICERS OR AGENTS SHALL NOT BE RESPONSIBLE FOR THE ACCURACY OR COMPLETENESS OF SCANNED COPIES OF THIS PLAN SHEET.

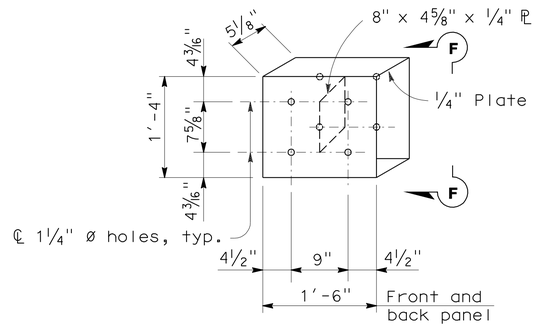

DETAIL E

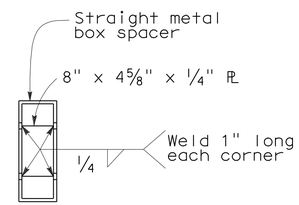

VIEW F-F

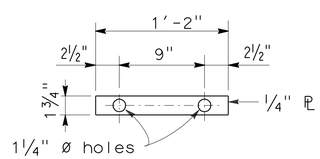

DETAIL H

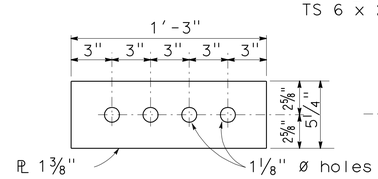

SPLICE PLATE

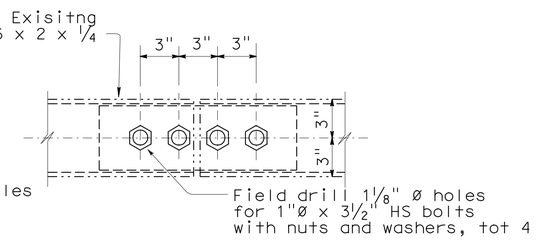

MODIFIED TUBE

RAIL SPLICE DETAIL
(SEE NOTE 7)

THRIE BEAM CONNECTION DETAILS
BARRIER RAILING TYPE 9

CONSTRUCTION DETAILS
NO SCALE

C-4

REVISED BY	DATE REVISED
KAMAL MCHANTAF	
MICHAEL RISTIC	

CALCULATED-DESIGNED BY
CHECKED BY

FUNCTIONAL SUPERVISOR
MICHAEL RISTIC

STATE OF CALIFORNIA - DEPARTMENT OF TRANSPORTATION
Caltrans MAINTENANCE DESIGN

LAST REVISION 08-20-12
DATE PLOTTED => 28-AUG-2012
TIME PLOTTED => 13:39

Dist	COUNTY	ROUTE	POST MILES TOTAL PROJECT	SHEET No.	TOTAL SHEETS
08	SBd	40	R119.0/R138.3	8	29

Kamal Mchantaf 8-20-12
REGISTERED CIVIL ENGINEER DATE

8-20-12
PLANS APPROVAL DATE

REGISTERED PROFESSIONAL ENGINEER
KAMAL MCHANTAF
No. C51050
Exp. 9-30-13
CIVIL
STATE OF CALIFORNIA

THE STATE OF CALIFORNIA OR ITS OFFICERS OR AGENTS SHALL NOT BE RESPONSIBLE FOR THE ACCURACY OR COMPLETENESS OF SCANNED COPIES OF THIS PLAN SHEET.

NOTES:

1. PLACE GROUND-IN INDENTATIONS RUMBLE STRIP PER STANDARD PLAN A40B.
2. LIMITS OF THE RUMBLE STRIPS AS SHOWN OR AS DIRECTED BY THE ENGINEER.

LEGEND:

RUMBLE STRIP

DIRECTION OF TRAFFIC

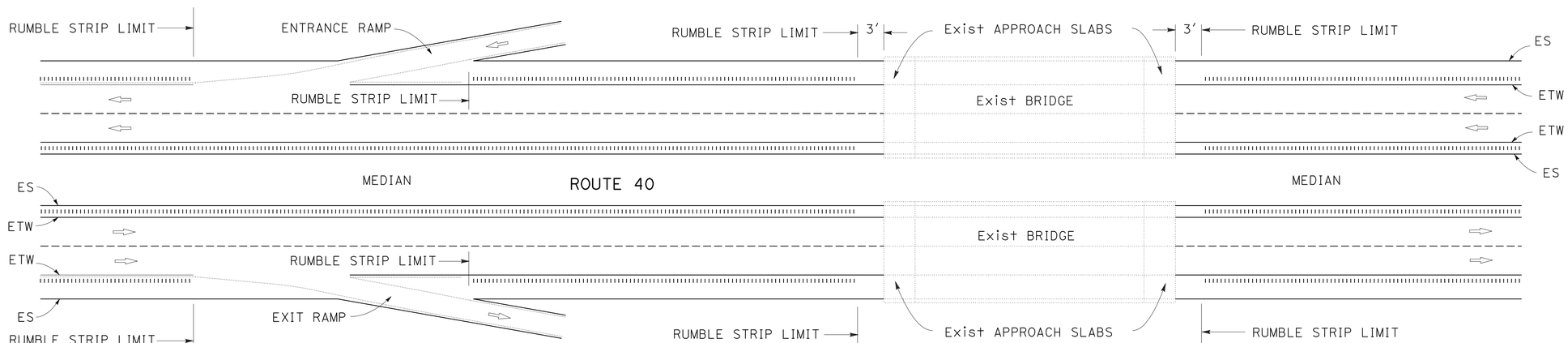

RUMBLE STRIP PLACEMENT

(AT RAMPS AND BRIDGES)

CONSTRUCTION DETAILS

NO SCALE

C-5

STATE OF CALIFORNIA - DEPARTMENT OF TRANSPORTATION
Caltrans® MAINTENANCE DESIGN

FUNCTIONAL SUPERVISOR: MICHAEL RISTIC

CALCULATED-DESIGNED BY: KAMAL MCHANTAF
CHECKED BY: MICHAEL RISTIC

REVISED BY
DATE REVISED

LAST REVISION 08-20-12
DATE PLOTTED => 28-AUG-2012
TIME PLOTTED => 13:39

Dist	COUNTY	ROUTE	POST MILES TOTAL PROJECT	SHEET No.	TOTAL SHEETS
08	SBd	40	R119.0/R138.3	9	29

Kamal Mchantaf 8-20-12
REGISTERED CIVIL ENGINEER DATE

8-20-12
PLANS APPROVAL DATE

REGISTERED PROFESSIONAL ENGINEER
KAMAL MCHANTAF
No. C51050
Exp. 9-30-13
CIVIL
STATE OF CALIFORNIA

THE STATE OF CALIFORNIA OR ITS OFFICERS OR AGENTS SHALL NOT BE RESPONSIBLE FOR THE ACCURACY OR COMPLETENESS OF SCANNED COPIES OF THIS PLAN SHEET.

ABBREVIATION:

RHMA-G RUBBERIZED HOT MIX ASPHALT (GAP GRADED)

LEGEND:

0.10' RHMA-G

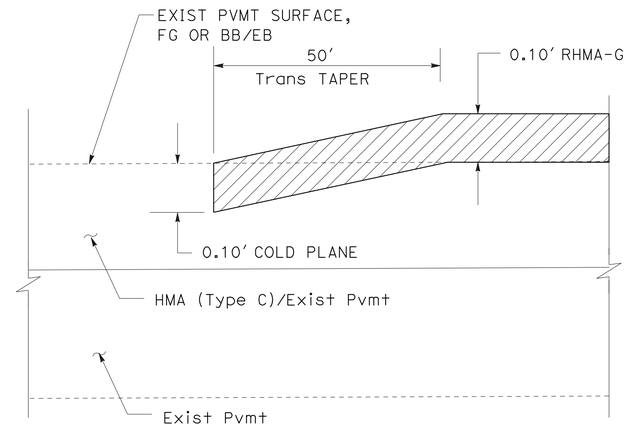

DETAIL "A"
PAVEMENT CONFORM

ENTRANCE / EXIT RAMP TO AND FROM MAINLINE
BEGIN / END BRIDGE
BEGIN / END CONSTRUCTION

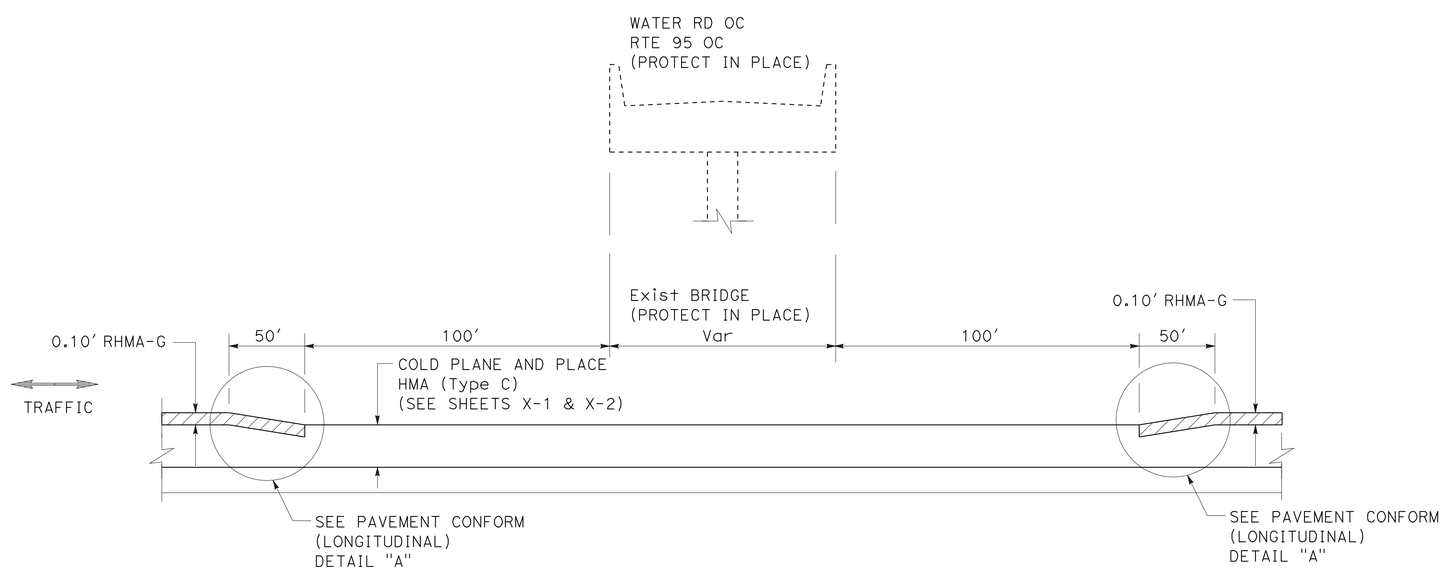

TAPER CONFORM TO EXISTING PAVEMENT

CONSTRUCTION DETAILS
NO SCALE **C-6**

STATE OF CALIFORNIA - DEPARTMENT OF TRANSPORTATION
Caltrans® MAINTENANCE DESIGN

FUNCTIONAL SUPERVISOR: MICHAEL RISTIC
CALCULATED-DESIGNED BY: KAMAL MCHANTAF
CHECKED BY: MICHAEL RISTIC
REVISED BY
DATE REVISED

LAST REVISION 08-20-12
DATE PLOTTED => 28-AUG-2012
TIME PLOTTED => 13:39

Dist	COUNTY	ROUTE	POST MILES TOTAL PROJECT	SHEET No.	TOTAL SHEETS
08	SBd	40	R119.0/R138.3	10	29

Kamal Mchantaf 8-20-12
REGISTERED CIVIL ENGINEER DATE

8-20-12
PLANS APPROVAL DATE

REGISTERED PROFESSIONAL ENGINEER KAMAL MCHANTAF No. C51050 Exp. 9-30-13 CIVIL STATE OF CALIFORNIA

THE STATE OF CALIFORNIA OR ITS OFFICERS OR AGENTS SHALL NOT BE RESPONSIBLE FOR THE ACCURACY OR COMPLETENESS OF SCANNED COPIES OF THIS PLAN SHEET.

NOTES:

1. DOWELS AND TIE BARS SPACING PER STANDARD PLANS P10 AND P18.
2. LONGITUDINAL WEAKENED PLANE JOINTS SHALL EXTEND TO AND TERMINATE AT THE TRANSVERSE JOINT WHERE NO SLAB WIDTH LESS THAN 2′ OR GREATER THAN 15′ RESULTS.
3. MATCH AND JOIN EXISTING GRADE ALONG EXISTING LOCAL STREET.
4. FOR DETAILS NOT SHOWN, SEE STD. PLANS P10, P12, P17, P18, P20, AND P30.
5. SEE SHEETS X-1 AND X-2 FOR PAVEMENT TYPICAL CROSS SECTIONS.
6. CONTRACTOR TO VERIFY EXISTING UTILITIES IF ANY.

ABBREVIATIONS:

JPCPRSC - JOINTED PLAIN CONCRETE PAVEMENT (RAMP TERMINI RAPID STRENGTH CONCRETE)
LCBRS - LEAN CONCRETE BASE RAPID SETTING

LEGEND:

⇨ DIRECTION OF TRAFFIC

[3] 0.25′ COLD PLANE
0.25′ HMA-C

[6] 0.90′ JPCPRSC
PLASTIC POLYETHYLENE BOND BREAKER
0.40′ LCBRS

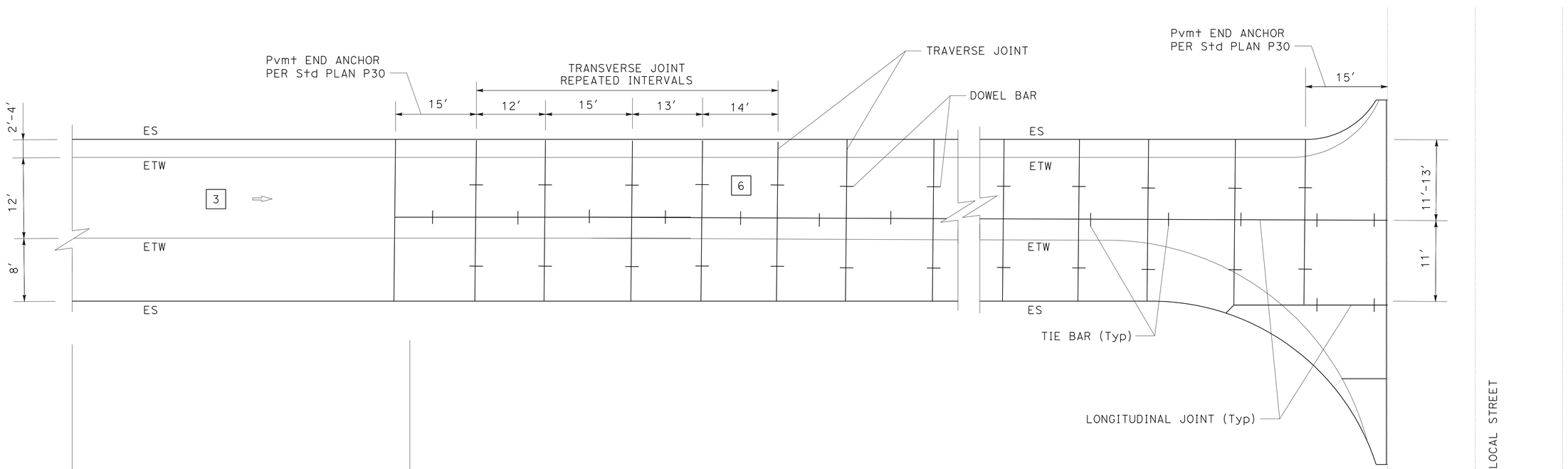

TYPICAL EXIT RAMP DETAIL

AT EASTBOUND ROUTE 95 OFF-RAMP

CONSTRUCTION DETAILS

NO SCALE

C-7

STATE OF CALIFORNIA - DEPARTMENT OF TRANSPORTATION
Caltrans MAINTENANCE DESIGN

FUNCTIONAL SUPERVISOR: MICHAEL RISTIC
CALCULATED-DESIGNED BY: KAMAL MCHANTAF
CHECKED BY: MICHAEL RISTIC
REVISED BY
DATE REVISED

LAST REVISION 08-20-12
DATE PLOTTED => 28-AUG-2012
TIME PLOTTED => 13:39

Dist	COUNTY	ROUTE	POST MILES TOTAL PROJECT	SHEET No.	TOTAL SHEETS
08	SBd	40	R119.0/R138.3	11	29

Kamal Mchantaf 8-20-12
REGISTERED CIVIL ENGINEER DATE

8-20-12
PLANS APPROVAL DATE

REGISTERED PROFESSIONAL ENGINEER
KAMAL MCHANTAF
No. C51050
Exp. 9-30-13
CIVIL
STATE OF CALIFORNIA

THE STATE OF CALIFORNIA OR ITS OFFICERS OR AGENTS SHALL NOT BE RESPONSIBLE FOR THE ACCURACY OR COMPLETENESS OF SCANNED COPIES OF THIS PLAN SHEET.

NOTES:

1. SEE SHEET X-2 FOR RAMP CROSS-SECTIONS.
2. SEE SHEET C-7 FOR EXIT RAMP TERMINI ADDITIONAL DETAIL.

ABBREVIATIONS:

JPCPRSC - JOINTED PLAIN CONCRETE PAVEMENT (RAMP TERMINI RAPID STRENGTH CONCRETE)
LCBRS - LEAN CONCRETE BASE RAPID SETTING

LEGEND:

⇨ DIRECTION OF TRAFFIC

0.25′ COLDPLANE
0.25′ HMA-C

0.90′ JPCPRSC
PLASTIC POLYETHLENE BOND BREAKER
0.40′ LCBRS

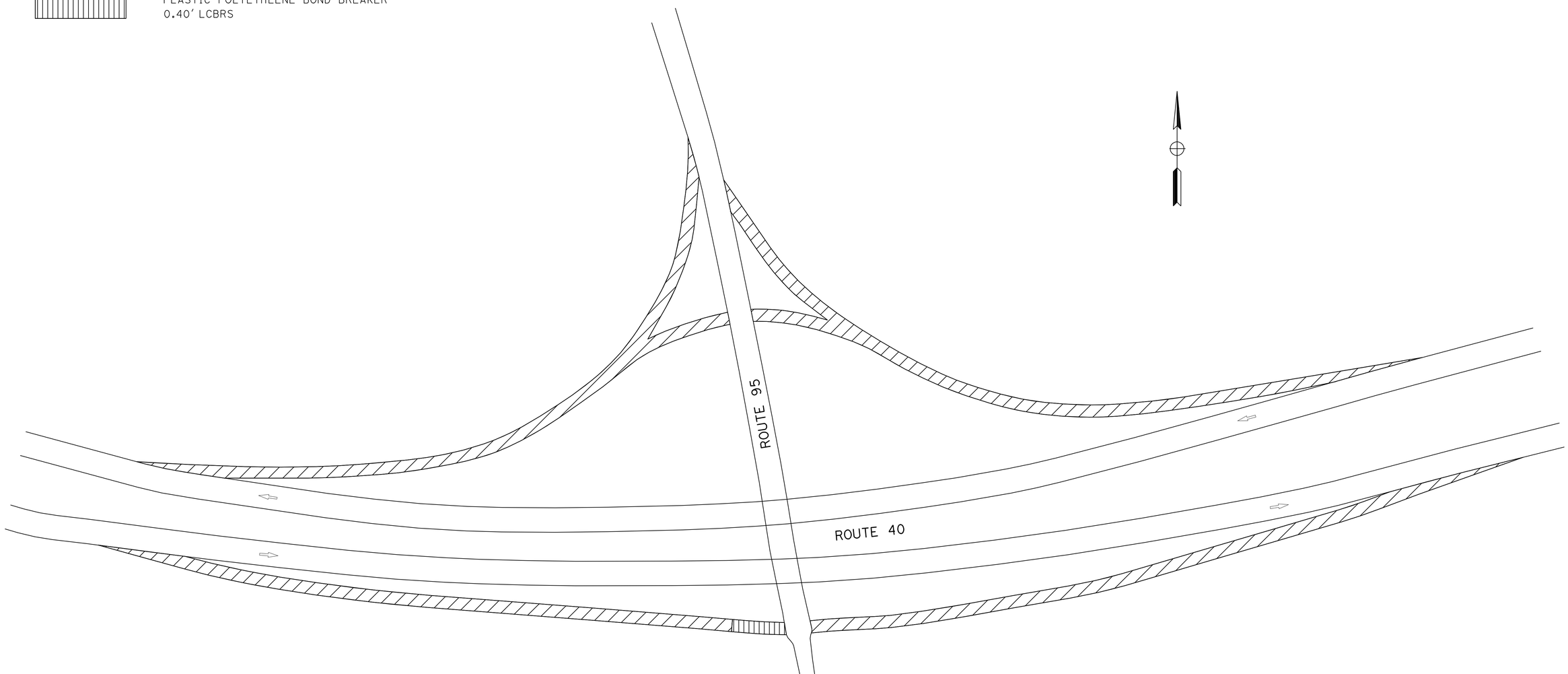

ROUTE 40/ROUTE 95 INTERCHANGE (PM R132.74)
LIMITS OF WORK

CONSTRUCTION DETAILS

NO SCALE

C-8

STATE OF CALIFORNIA - DEPARTMENT OF TRANSPORTATION
Caltrans® MAINTENANCE DESIGN

FUNCTIONAL SUPERVISOR: MICHAEL RISTIC
CALCULATED-DESIGNED BY: KAMAL MCHANTAF
CHECKED BY: MICHAEL RISTIC
REVISED BY
DATE REVISED

LAST REVISION 08-20-12
DATE PLOTTED => 28-AUG-2012
TIME PLOTTED => 13:39

Dist	COUNTY	ROUTE	POST MILES TOTAL PROJECT	SHEET No.	TOTAL SHEETS
08	SBd	40	R119.0/R138.3	12	29

W E Wasser 8-20-12
REGISTERED CIVIL ENGINEER DATE

8-20-12
PLANS APPROVAL DATE

REGISTERED PROFESSIONAL ENGINEER W.E. WASSER No. 37378 Exp 6/30/14 CIVIL STATE OF CALIFORNIA

THE STATE OF CALIFORNIA OR ITS OFFICERS OR AGENTS SHALL NOT BE RESPONSIBLE FOR THE ACCURACY OR COMPLETENESS OF SCANNED COPIES OF THIS PLAN SHEET.

LEGEND:

- CONSTRUCTION AREA SIGN (1 POST)
- CONSTRUCTION AREA SIGN (2 POST)
- CONSTRUCTION WORK AREA
- (X) CONSTRUCTION AREA SIGN CODE
- PORTABLE CHANGEABLE MESSAGE SIGN (PCMS)

NOTES:

1) LOCATIONS AND POSITIONS OF THE CONSTRUCTION AREA SIGNS ARE APPROXIMATE. THE EXACT LOCATIONS AND POSITIONS WILL BE DETERMINED BY THE ENGINEER.
2) REFER TO Std PLANS T10, T10A AND T14 FOR TRAFFIC CONTROL REQUIREMENTS. REFER TO Std PLANS T15 AND T16 FOR MOVING LANE CLOSURES.
3) MINIMUM SPACING BETWEEN TWO CONSECUTIVE SIGNS SHALL BE APPROXIMATELY 500 FEET OR AS DETERMINED BY THE ENGINEER.

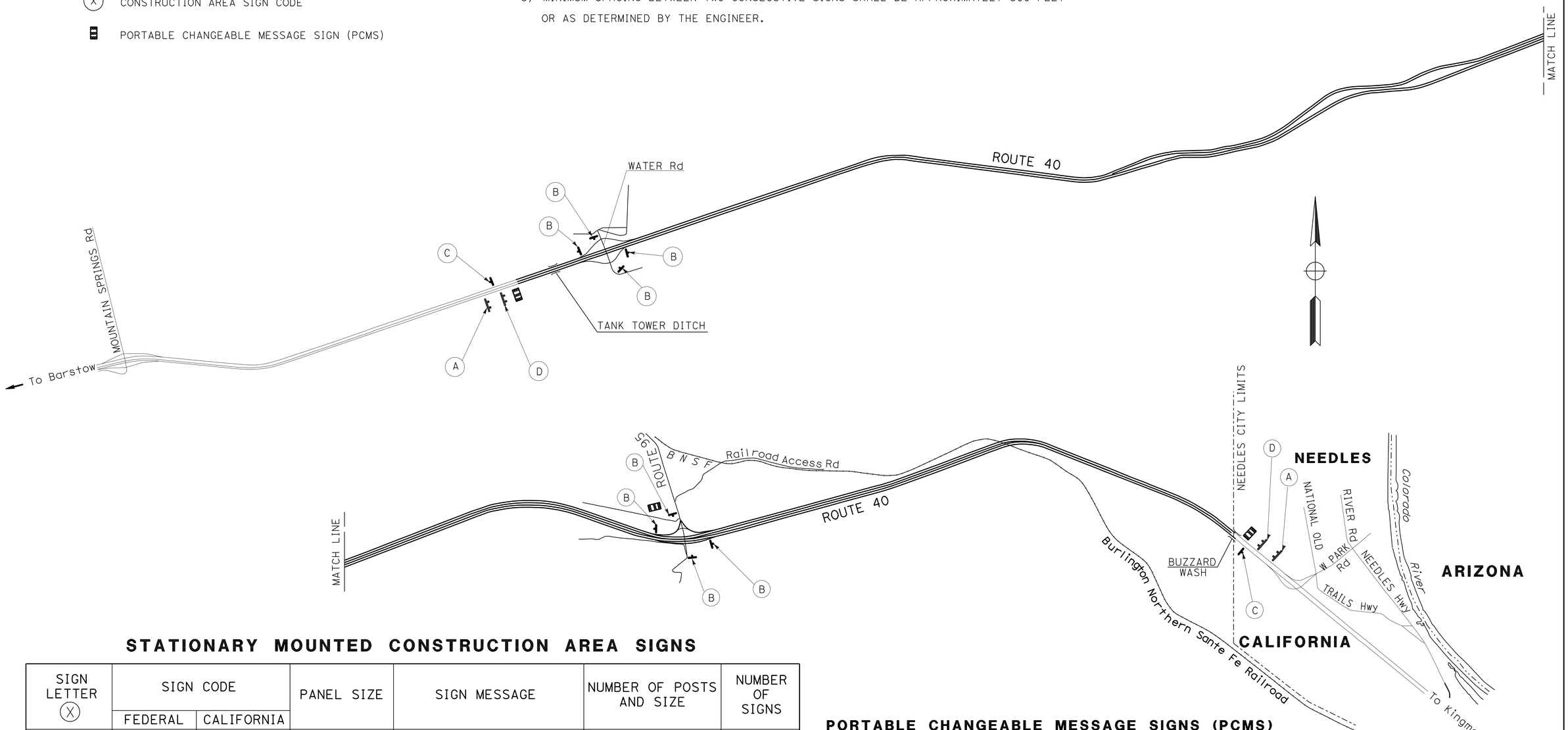

STATIONARY MOUNTED CONSTRUCTION AREA SIGNS

SIGN LETTER (X)	SIGN CODE FEDERAL	SIGN CODE CALIFORNIA	PANEL SIZE	SIGN MESSAGE	NUMBER OF POSTS AND SIZE	NUMBER OF SIGNS
A		C40(CA)	144" x 60"	TRAFFIC FINES DOUBLED IN CONSTRUCTION ZONES	2 - 6" x 8"	2
B	W20-1		48" x 48"	ROAD WORK AHEAD	1 - 6" x 6"	8
C	G20-2		48" x 24"	END ROAD WORK	1 - 4" x 6"	2
D	G20-1		90" x 48"	ROAD WORK NEXT 20 MILES	2 - 6" x 6"	2

PORTABLE CHANGEABLE MESSAGE SIGNS (PCMS)

(EA)
3

APPROVED FOR CONSTRUCTION AREA SIGN WORK ONLY

CONSTRUCTION AREA SIGNS

NO SCALE

CS-1

STATE OF CALIFORNIA - DEPARTMENT OF TRANSPORTATION
Caltrans
TRAFFIC DESIGN
FUNCTIONAL SUPERVISOR: BILL WASSER
CALCULATED-DESIGNED BY: PATTI BARTOLI
CHECKED BY: DARYUSH NAMI
REVISED BY
DATE REVISED

LAST REVISION 08-20-12
DATE PLOTTED => 28-AUG-2012
TIME PLOTTED => 13:39

Dist	COUNTY	ROUTE	POST MILES TOTAL PROJECT	SHEET No.	TOTAL SHEETS
08	SBd	40	R119.0/R138.3	13	29

W E Wasser 8-20-12
REGISTERED CIVIL ENGINEER DATE

8-20-12
PLANS APPROVAL DATE

REGISTERED PROFESSIONAL ENGINEER W.E. WASSER No. 37378 Exp 6/30/14 CIVIL STATE OF CALIFORNIA

THE STATE OF CALIFORNIA OR ITS OFFICERS OR AGENTS SHALL NOT BE RESPONSIBLE FOR THE ACCURACY OR COMPLETENESS OF SCANNED COPIES OF THIS PLAN SHEET.

STATIONARY MOUNTED CONSTRUCTION AREA SIGNS

LEGEND:

- CONSTRUCTION AREA SIGN (TWO POST)
- CONSTRUCTION AREA SIGN (ONE POST)
- (X) CONSTRUCTION AREA SIGN LETTER
- DIRECTION OF DETOUR
- RAMP CLOSED

NOTE:

DIMENSIONS IN INCHES, UNLESS OTHERWISE NOTED.

SIGN LETTER (X)	SIGN CODE FEDERAL	SIGN CODE CALIFORNIA	PANEL SIZE	SIGN MESSAGE	NUMBER OF POSTS AND SIZE	NUMBER OF SIGNS
(A)	C-SPECIAL		108" x 60"	40 EAST RAMP CLOSED USE DETOUR	2 - 6" x 8"	2
(B)	C-SPECIAL		84" x 48"	40 EAST DETOUR (VERTICAL ARROW)	2 - 4" x 6"	2
(C)	M4-10(LT) M3-2	G27-2(CA)	48" x 18" 24" x 24" 24" x 12"	DETOUR (LEFT) 40 SHIELD EAST (INTERSTATE)	1 - 6" x 6"	3
(D)		SC3(CA) G27-2(CA)	48" x 18" 24" x 24"	DETOUR (ARROW) 40 SHIELD	1 - 4" x 6"	2
(E)	C-SPECIAL		84" x 48"	40 EAST DETOUR (DIAGONAL ARROW)	2 - 4" x 6"	1
(F)	M4-8A		24" x 18"	END DETOUR	1 - 4" x 4"	1

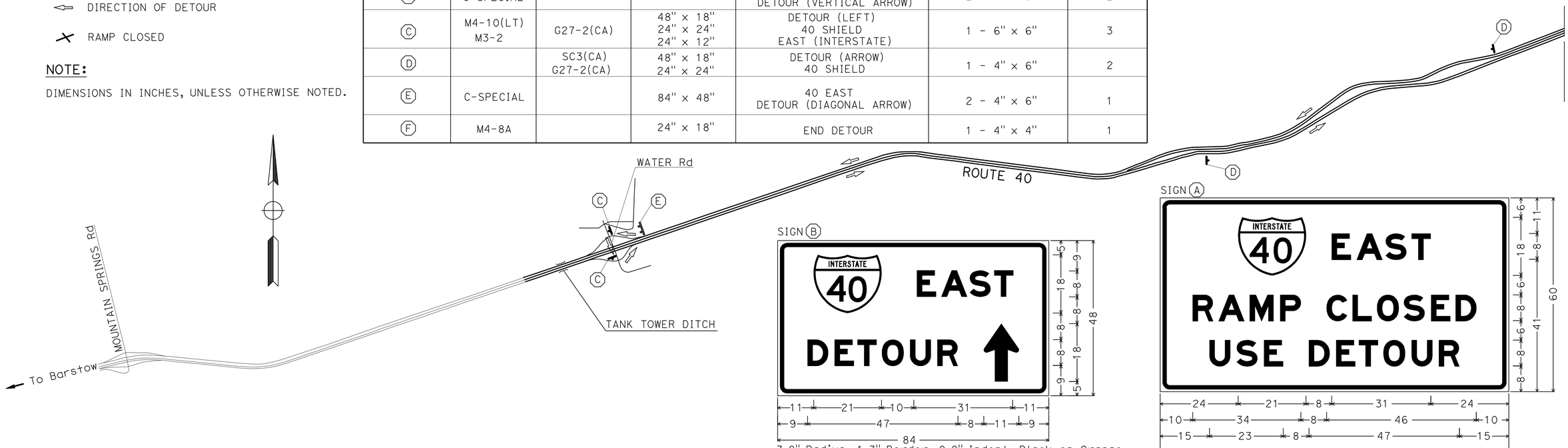

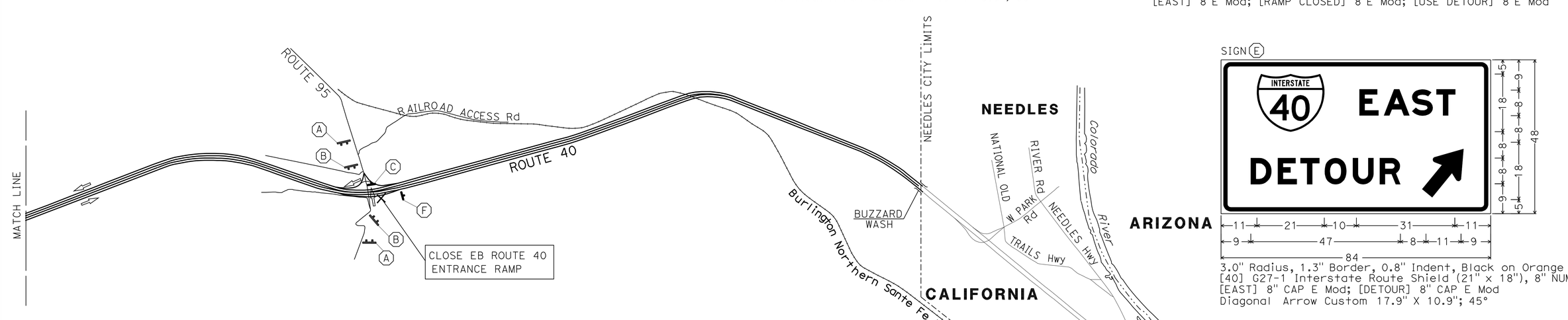

DETOUR DURING CLOSURE OF ROUTE 95/40 EB ENTRANCE RAMP

APPROVED FOR DETOUR WORK ONLY

DETOUR PLAN

NO SCALE

DE-1

STATE OF CALIFORNIA - DEPARTMENT OF TRANSPORTATION
Caltrans® TRAFFIC DESIGN

FUNCTIONAL SUPERVISOR: BILL WASSER
CALCULATED-DESIGNED BY: PATTI BARTOLI
CHECKED BY: DARYUSH NAMI
REVISED BY / DATE REVISED

LAST REVISION 08-20-12
DATE PLOTTED => 28-AUG-2012
TIME PLOTTED => 13:39

Dist	COUNTY	ROUTE	POST MILES TOTAL PROJECT	SHEET No.	TOTAL SHEETS
08	SBd	40	R119.0/R138.3	14	29

W E Wasser 8-20-12
REGISTERED CIVIL ENGINEER DATE

8-20-12
PLANS APPROVAL DATE

REGISTERED PROFESSIONAL ENGINEER W.E. WASSER No. 37378 Exp 6/30/14 CIVIL STATE OF CALIFORNIA

THE STATE OF CALIFORNIA OR ITS OFFICERS OR AGENTS SHALL NOT BE RESPONSIBLE FOR THE ACCURACY OR COMPLETENESS OF SCANNED COPIES OF THIS PLAN SHEET.

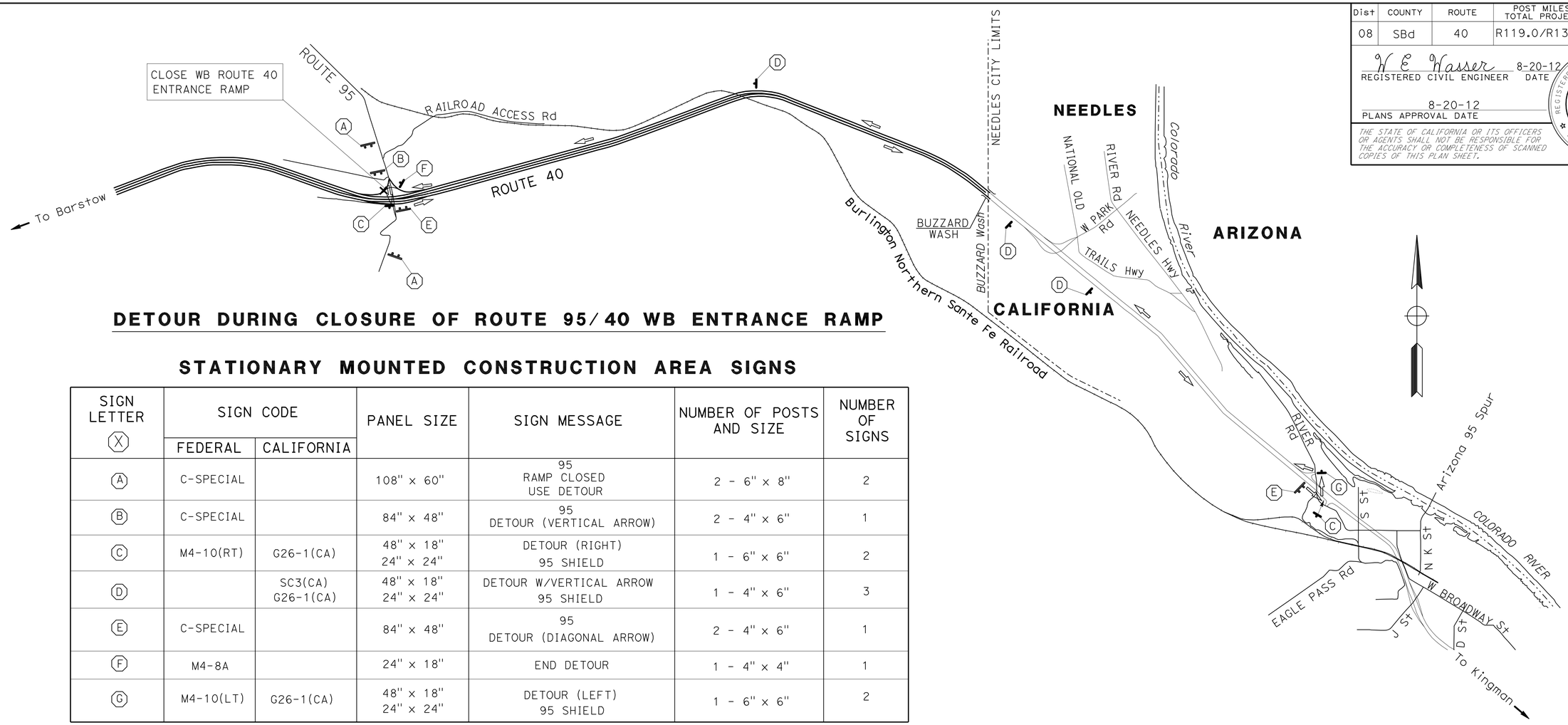

DETOUR DURING CLOSURE OF ROUTE 95/40 WB ENTRANCE RAMP

STATIONARY MOUNTED CONSTRUCTION AREA SIGNS

SIGN LETTER (X)	SIGN CODE FEDERAL	SIGN CODE CALIFORNIA	PANEL SIZE	SIGN MESSAGE	NUMBER OF POSTS AND SIZE	NUMBER OF SIGNS
A	C-SPECIAL		108" x 60"	95 RAMP CLOSED USE DETOUR	2 - 6" x 8"	2
B	C-SPECIAL		84" x 48"	95 DETOUR (VERTICAL ARROW)	2 - 4" x 6"	1
C	M4-10(RT)	G26-1(CA)	48" x 18" 24" x 24"	DETOUR (RIGHT) 95 SHIELD	1 - 6" x 6"	2
D		SC3(CA) G26-1(CA)	48" x 18" 24" x 24"	DETOUR W/VERTICAL ARROW 95 SHIELD	1 - 4" x 6"	3
E	C-SPECIAL		84" x 48"	95 DETOUR (DIAGONAL ARROW)	2 - 4" x 6"	1
F	M4-8A		24" x 18"	END DETOUR	1 - 4" x 4"	1
G	M4-10(LT)	G26-1(CA)	48" x 18" 24" x 24"	DETOUR (LEFT) 95 SHIELD	1 - 6" x 6"	2

SIGN (A)

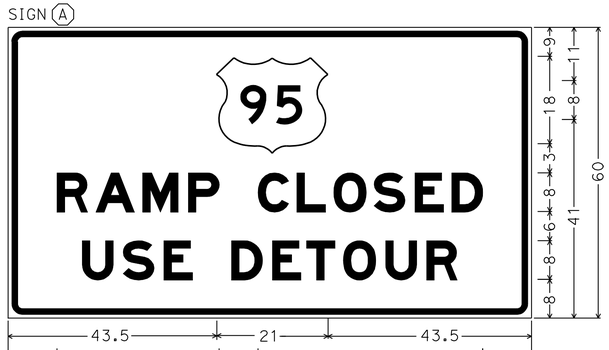

3.0" Radius, 1.3" Border, 0.8" Indent, Black on Orange
[95] G26-1 U.S. Route Shield (21" x 18"), 8" NUM
[RAMP CLOSED] 8"E Mod; [USE DETOUR] 8"E Mod

SIGN (B)

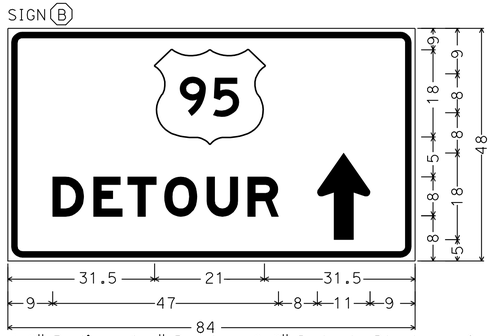

3.0" Radius, 1.3" Border, 0.8" Indent, Black on Orange
[95] G26-1 U.S. Route Shield (21" x 18"), 8" NUM
[DETOUR] 8" CAP E Mod
Vertical Arrow Custom 17.9" X 10.9"; 90°

SIGN (E)

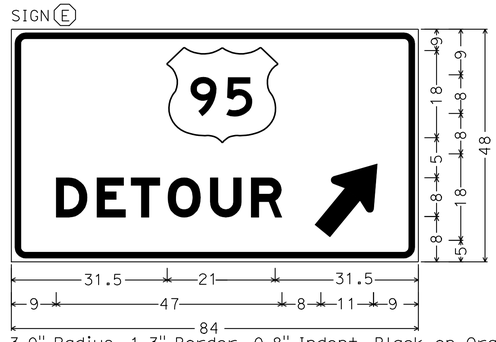

3.0" Radius, 1.3" Border, 0.8" Indent, Black on Orange
[95] G26-1 U.S. Route Shield (21" x 18"), 8" NUM
[DETOUR] 8" CAP E Mod
Diagonal Arrow Custom 17.9" X 10.9"; 45°

APPROVED FOR DETOUR WORK ONLY

DETOUR PLAN
NO SCALE **DE-2**

STATE OF CALIFORNIA - DEPARTMENT OF TRANSPORTATION
Caltrans® TRAFFIC DESIGN
FUNCTIONAL SUPERVISOR: BILL WASSER
CALCULATED-DESIGNED BY: DARYUSH NAMI
CHECKED BY: PATTI BARTOLI
REVISED BY
DATE REVISED

LAST REVISION 08-20-12
DATE PLOTTED => 28-AUG-2012
TIME PLOTTED => 13:39

Dist	COUNTY	ROUTE	POST MILES TOTAL PROJECT	SHEET No.	TOTAL SHEETS
08	SBd	40	R119.0/R138.3	15	29

W E Wasser 8-20-12
REGISTERED CIVIL ENGINEER DATE

8-20-12
PLANS APPROVAL DATE

REGISTERED PROFESSIONAL ENGINEER W.E. WASSER No. 37378 Exp 6/30/14 CIVIL STATE OF CALIFORNIA

THE STATE OF CALIFORNIA OR ITS OFFICERS OR AGENTS SHALL NOT BE RESPONSIBLE FOR THE ACCURACY OR COMPLETENESS OF SCANNED COPIES OF THIS PLAN SHEET.

STATIONARY MOUNTED CONSTRUCTION AREA SIGNS

SIGN LETTER (X)	SIGN CODE FEDERAL	SIGN CODE CALIFORNIA	PANEL SIZE	SIGN MESSAGE	NUMBER OF POSTS AND SIZE	NUMBER OF SIGNS
(A)	C-SPECIAL		108" x 60"	95 RAMP CLOSED USE DETOUR	2 - 6" x 8"	1
(B)	C-SPECIAL		84" x 48"	95 DETOUR (VERTICAL ARROW)	2 - 4" x 6"	1
(C)	M4-10(LT) M3-2	G26-1<CA>	48" x 18" 24" x 24" 24" x 12"	DETOUR (LEFT) 95 SHIELD WEST (BLACK ON WHITE)	1 - 6" x 6"	2
(D)		SC3<CA> G26-1<CA>	48" x 18" 24" x 24"	DETOUR W/VERTICAL ARROW 95 SHIELD	1 - 4" x 6"	2
(E)	C-SPECIAL		84" x 48"	95 DETOUR (DIAGONAL ARROW)	2 - 4" x 6"	1
(F)	M4-8A		24" x 18"	END DETOUR	1 - 4" x 4"	1

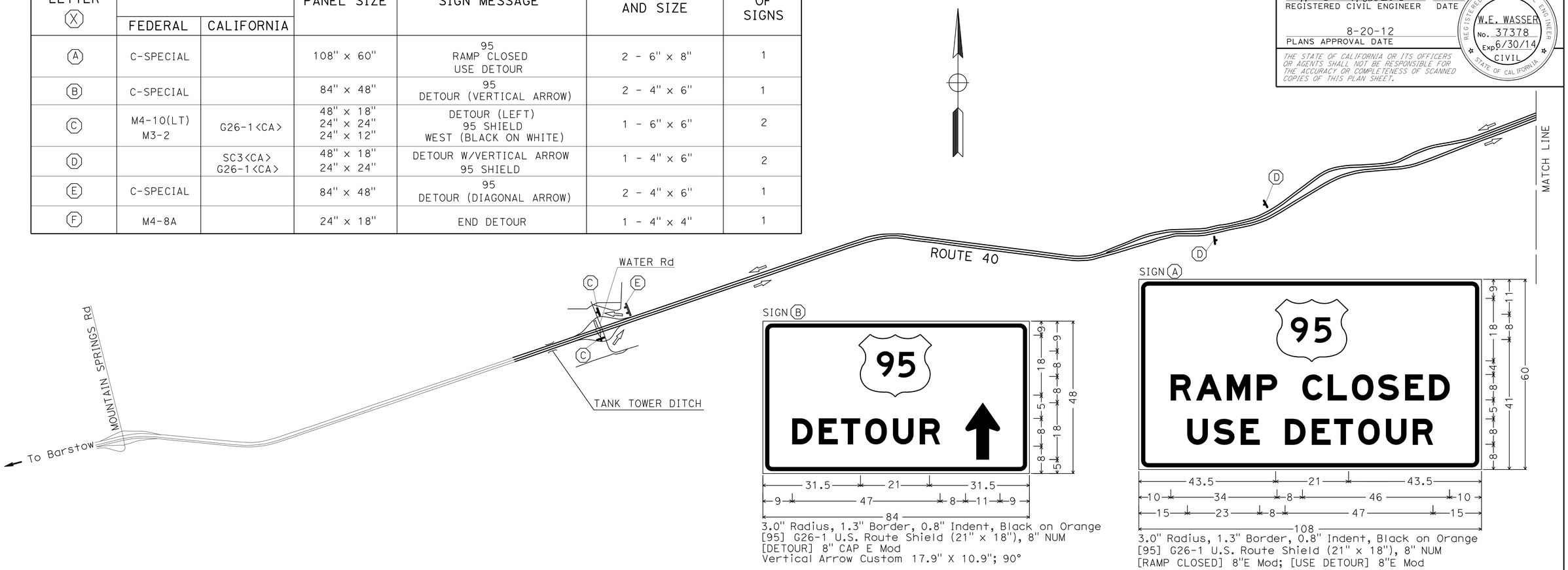

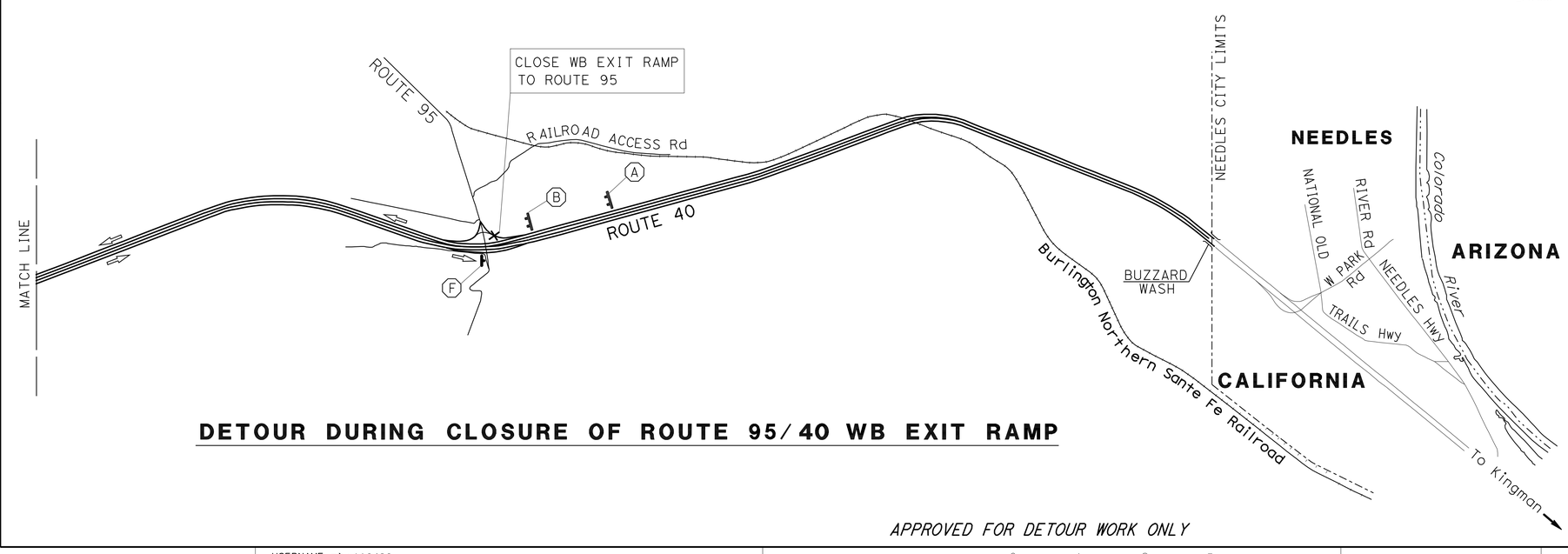

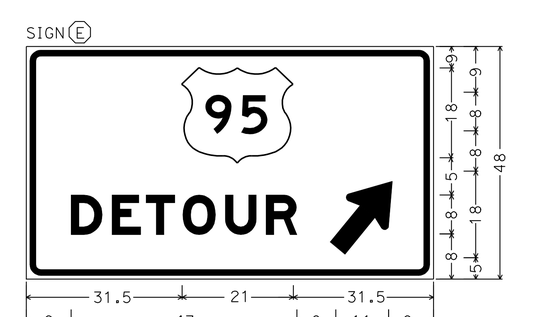

DETOUR DURING CLOSURE OF ROUTE 95/40 WB EXIT RAMP

APPROVED FOR DETOUR WORK ONLY

DETOUR PLAN

NO SCALE

DE-3

STATE OF CALIFORNIA - DEPARTMENT OF TRANSPORTATION
Caltrans® TRAFFIC DESIGN

FUNCTIONAL SUPERVISOR: BILL WASSER
CALCULATED-DESIGNED BY: PATTI BARTOLI
CHECKED BY: DARYUSH NAMI
REVISED BY / DATE REVISED

LAST REVISION 08-20-12 | DATE PLOTTED => 28-AUG-2012 | TIME PLOTTED => 13:39

Dist	COUNTY	ROUTE	POST MILES TOTAL PROJECT	SHEET No.	TOTAL SHEETS
08	SBd	40	R119.0/R138.3	16	29

W E Wasser 8-20-12
REGISTERED CIVIL ENGINEER DATE

8-20-12
PLANS APPROVAL DATE

REGISTERED PROFESSIONAL ENGINEER W.E. WASSER No. 37378 Exp 6/30/14 CIVIL STATE OF CALIFORNIA

THE STATE OF CALIFORNIA OR ITS OFFICERS OR AGENTS SHALL NOT BE RESPONSIBLE FOR THE ACCURACY OR COMPLETENESS OF SCANNED COPIES OF THIS PLAN SHEET.

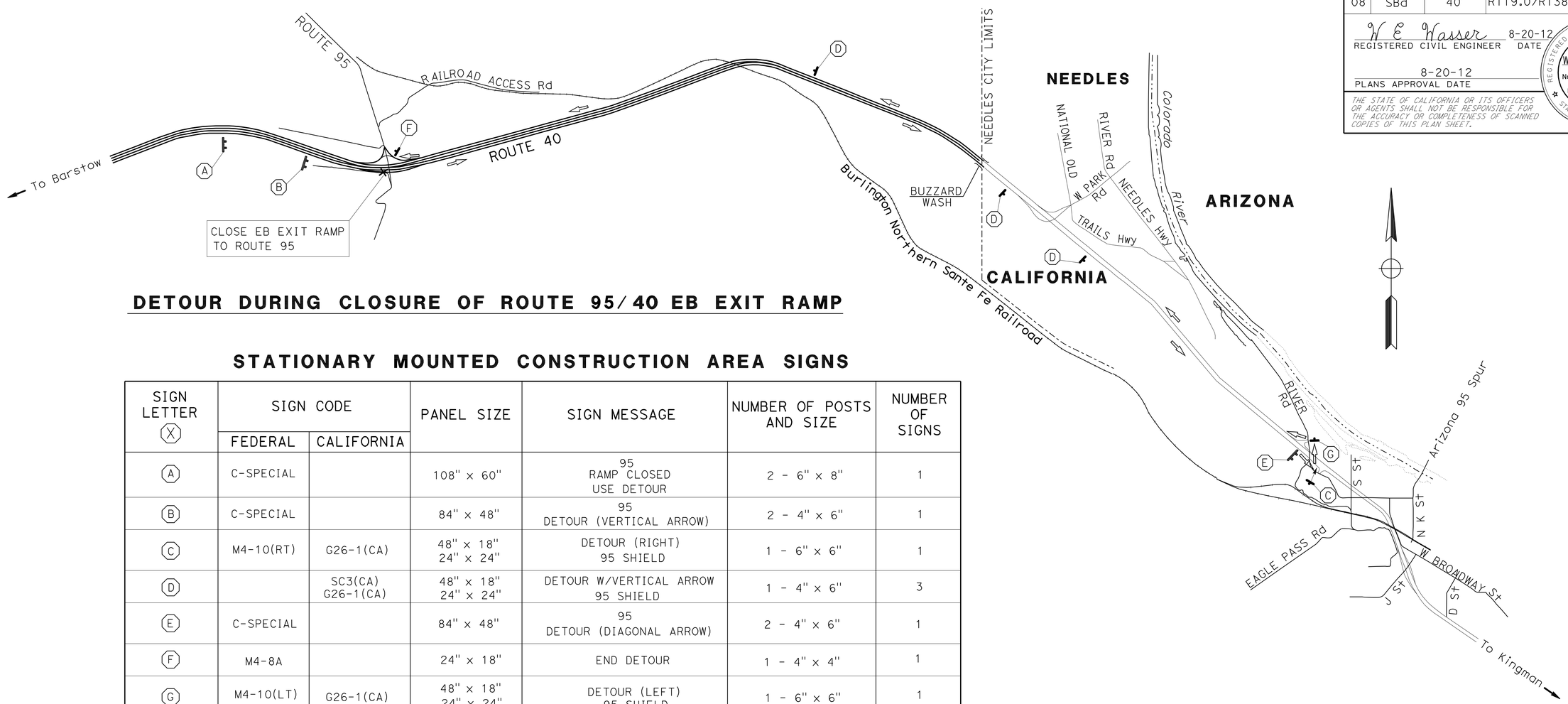

DETOUR DURING CLOSURE OF ROUTE 95/40 EB EXIT RAMP

STATIONARY MOUNTED CONSTRUCTION AREA SIGNS

SIGN LETTER (X)	SIGN CODE FEDERAL	SIGN CODE CALIFORNIA	PANEL SIZE	SIGN MESSAGE	NUMBER OF POSTS AND SIZE	NUMBER OF SIGNS
(A)	C-SPECIAL		108" x 60"	95 RAMP CLOSED USE DETOUR	2 - 6" x 8"	1
(B)	C-SPECIAL		84" x 48"	95 DETOUR (VERTICAL ARROW)	2 - 4" x 6"	1
(C)	M4-10(RT)	G26-1(CA)	48" x 18" 24" x 24"	DETOUR (RIGHT) 95 SHIELD	1 - 6" x 6"	1
(D)		SC3(CA) G26-1(CA)	48" x 18" 24" x 24"	DETOUR W/VERTICAL ARROW 95 SHIELD	1 - 4" x 6"	3
(E)	C-SPECIAL		84" x 48"	95 DETOUR (DIAGONAL ARROW)	2 - 4" x 6"	1
(F)	M4-8A		24" x 18"	END DETOUR	1 - 4" x 4"	1
(G)	M4-10(LT)	G26-1(CA)	48" x 18" 24" x 24"	DETOUR (LEFT) 95 SHIELD	1 - 6" x 6"	1

SIGN (A)

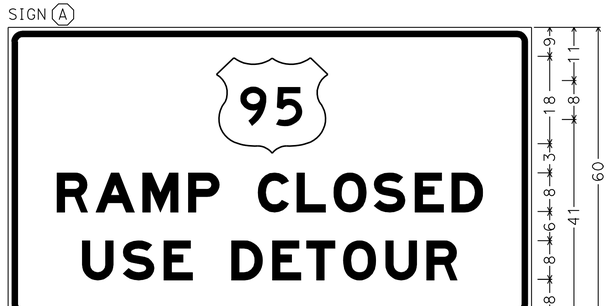

3.0" Radius, 1.3" Border, 0.8" Indent, Black on Orange
[95] G26-1 U.S. Route Shield (21" x 18"), 8" NUM
[RAMP CLOSED] 8"E Mod; [USE DETOUR] 8"E Mod

SIGN (B)

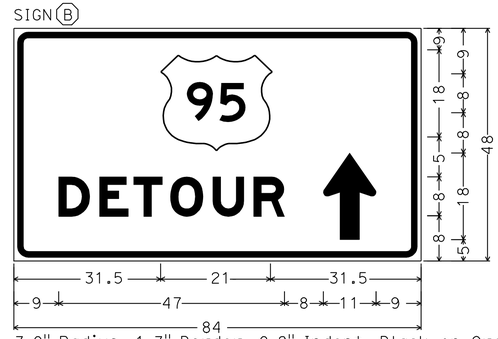

3.0" Radius, 1.3" Border, 0.8" Indent, Black on Orange
[95] G26-1 U.S. Route Shield (21" x 18"), 8" NUM
[DETOUR] 8" CAP E Mod
Vertical Arrow Custom 17.9" X 10.9"; 90°

SIGN (E)

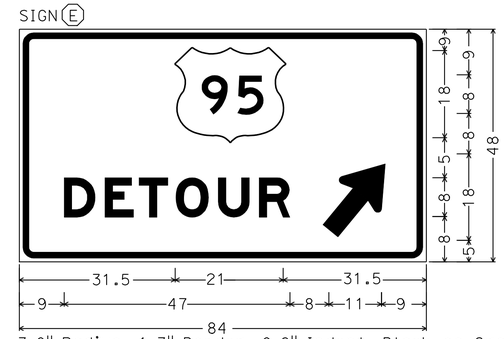

3.0" Radius, 1.3" Border, 0.8" Indent, Black on Orange
[95] G26-1 U.S. Route Shield (21" x 18"), 8" NUM
[DETOUR] 8" CAP E Mod
Diagonal Arrow Custom 17.9" X 10.9"; 45°

APPROVED FOR DETOUR WORK ONLY

DETOUR PLAN
NO SCALE **DE-4**

STATE OF CALIFORNIA - DEPARTMENT OF TRANSPORTATION
Caltrans® TRAFFIC DESIGN

FUNCTIONAL SUPERVISOR: BILL WASSER
CALCULATED-DESIGNED BY: PATTI BARTOLI
CHECKED BY: DARYUSH NAMI
REVISED BY
DATE REVISED

LAST REVISION 08-20-12
DATE PLOTTED => 28-AUG-2012
TIME PLOTTED => 13:39

Dist	COUNTY	ROUTE	POST MILES TOTAL PROJECT	SHEET No.	TOTAL SHEETS
08	SBd	40	R119.0/R138.3	17	29

W E Wasser 8-20-12
REGISTERED CIVIL ENGINEER DATE

8-20-12
PLANS APPROVAL DATE

REGISTERED PROFESSIONAL ENGINEER W.E. WASSER No. 37378 Exp 6/30/14 CIVIL STATE OF CALIFORNIA

THE STATE OF CALIFORNIA OR ITS OFFICERS OR AGENTS SHALL NOT BE RESPONSIBLE FOR THE ACCURACY OR COMPLETENESS OF SCANNED COPIES OF THIS PLAN SHEET.

NOTES:

1. MARKERS SHALL BE INSTALLED BEFORE PLACING THE STRIPE.
2. REFER TO STANDARD PLAN A20A FOR PLACEMENT OF TYPE C MARKERS IN ADVANCE OF EXIT RAMP.

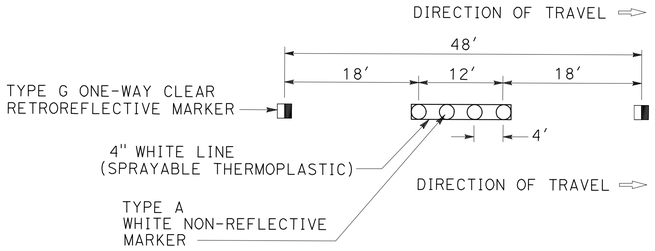

DETAIL 13 MODIFIED (13M)

INSTALL TYPE A NON-REFLECTIVE MARKER WITH STRIPING DETAIL 13M
INSTALL TYPE A MARKER BEFORE STRIPING TO GET THE PROPER BONDING

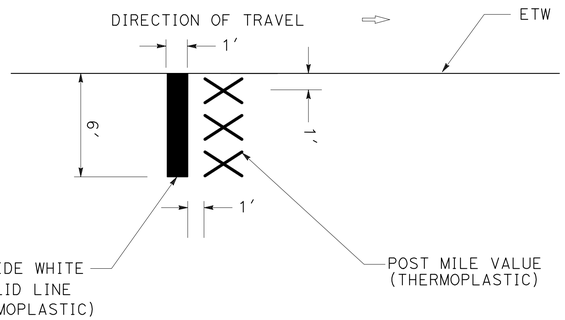

TYPICAL AIRCRAFT PAVEMENT MARKING

@ 5 MILE INTERVALS (FOR POSTMILES 120, 125, 130 AND 135)

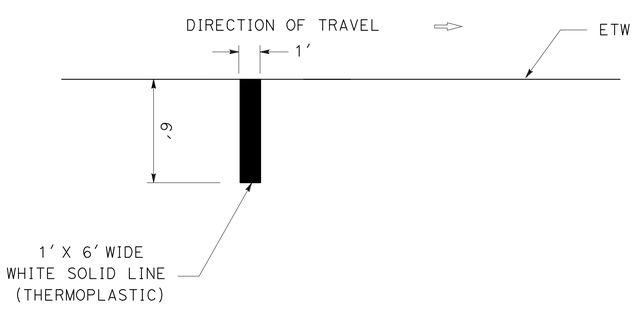

TYPICAL AIRCRAFT PAVEMENT MARKING

@ 1 MILE INTERVALS (FOR POSTMILES 119, 121, 122, 123, 124, 126, 127, 128, 129, 131, 132, 133, 134, 136, 137, AND 138)

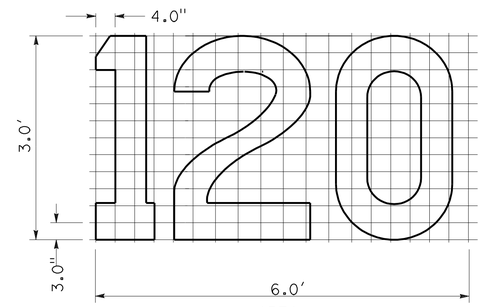

AREA:
′1′ = 1.69 SQFT
′2′ = 3.13 SQFT
′0′ = 3.1 SQFT

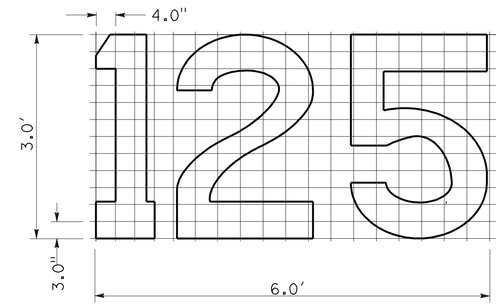

AREA:
′1′ = 1.69 SQFT
′2′ = 3.13 SQFT
′5′ = 3.51 SQFT

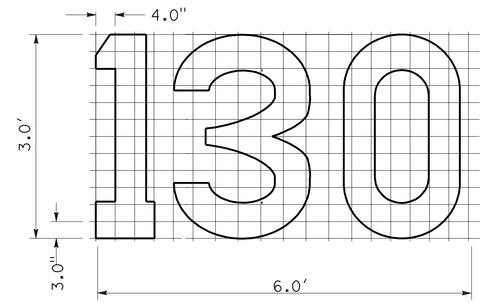

AREA:
′1′ = 1.69 SQFT
′3′ = 3.21 SQFT
′0′ = 3.1 SQFT

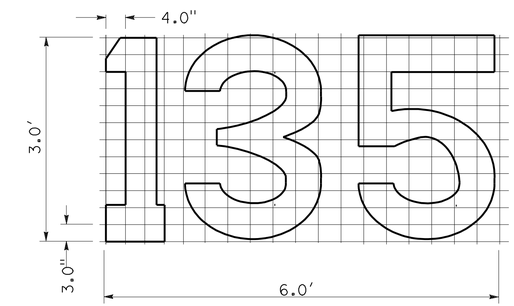

AREA:
′1′ = 1.69 SQFT
′3′ = 3.21 SQFT
′5′ = 3.51 SQFT

TYPICAL NUMERALS PAVEMENT MARKING

3.0′ X 6.0′ GRID

APPROVED FOR PAVEMENT DELINEATION WORK ONLY

PAVEMENT DELINEATION DETAILS

NO SCALE

PDD-1

STATE OF CALIFORNIA - DEPARTMENT OF TRANSPORTATION
Caltrans® **TRAFFIC DESIGN**

FUNCTIONAL SUPERVISOR: BILL WASSER
CALCULATED-DESIGNED BY: DARYUSH NAMI
CHECKED BY:
REVISED BY: PATTI BARTOLI
DATE REVISED:

LAST REVISION 08-20-12
DATE PLOTTED => 28-AUG-2012
TIME PLOTTED => 13:39

Dist	COUNTY	ROUTE	POST MILES TOTAL PROJECT	SHEET No.	TOTAL SHEETS
08	SBd	40	R119.0/R138.3	18	29

W E Wasser 8-20-12
REGISTERED CIVIL ENGINEER DATE

8-20-12
PLANS APPROVAL DATE

REGISTERED PROFESSIONAL ENGINEER
W.E. WASSER
No. 37378
Exp 6/30/14
CIVIL
STATE OF CALIFORNIA

THE STATE OF CALIFORNIA OR ITS OFFICERS OR AGENTS SHALL NOT BE RESPONSIBLE FOR THE ACCURACY OR COMPLETENESS OF SCANNED COPIES OF THIS PLAN SHEET.

NOTE:

REFER TO STANDARD PLANS A77EI, A77F1 AND A77F5 FOR GUARDRAIL LAYOUTS AND DETAILS.

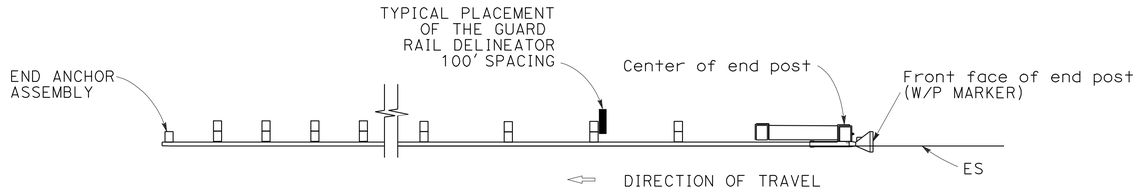

ALONG MBGR (TYPE 11A LAYOUT)

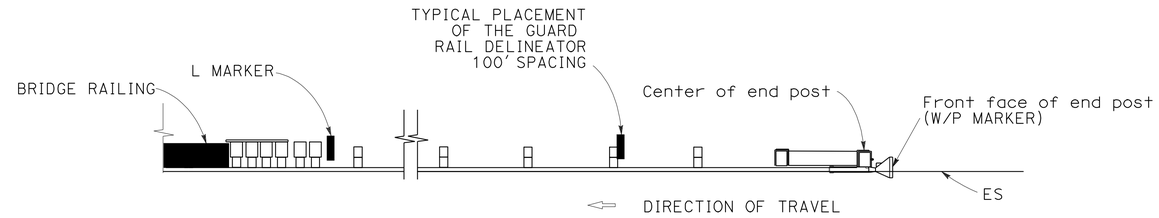

ALONG MBGR (TYPE 12A LAYOUT)

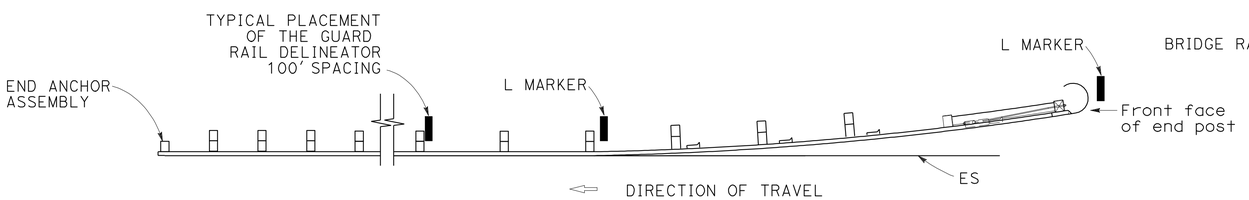

ALONG MBGR (TYPE 11B LAYOUT)

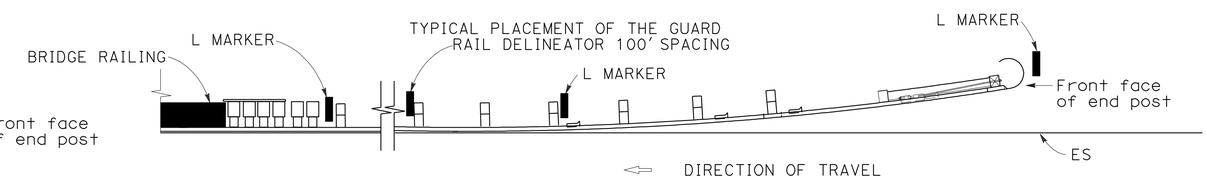

ALONG MBGR (TYPE 12B LAYOUT)

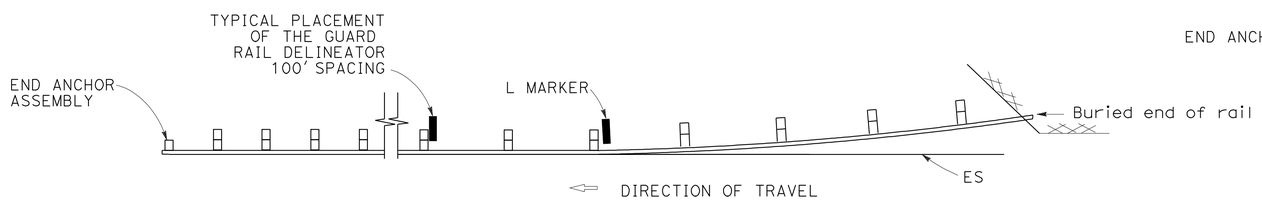

ALONG MBGR (TYPE 11C LAYOUT)

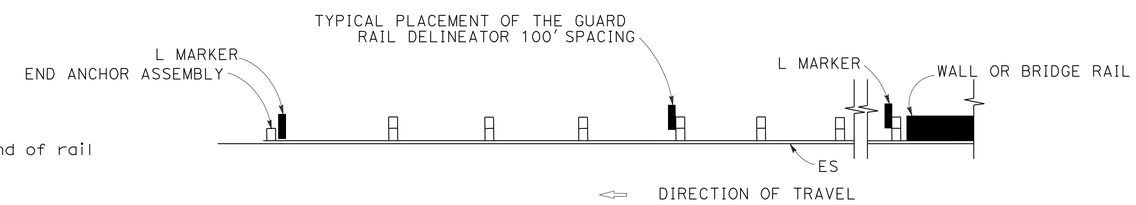

ALONG MBGR (TYPE 12DD LAYOUT)

PLACEMENT OF GUARD RAIL DELINEATORS AND L MARKERS

APPROVED FOR PAVEMENT DELINEATION WORK ONLY

PAVEMENT DELINEATION DETAILS

NO SCALE

PDD-2

REVISED BY	DATE REVISED

CALCULATED-DESIGNED BY	PATTI BARTOLI
CHECKED BY	DARYUSH NAMI
FUNCTIONAL SUPERVISOR	BILL WASSER

STATE OF CALIFORNIA - DEPARTMENT OF TRANSPORTATION
Caltrans
TRAFFIC DESIGN

LAST REVISION 08-20-12
DATE PLOTTED => 28-AUG-2012
TIME PLOTTED => 13:39

Dist	COUNTY	ROUTE	POST MILES TOTAL PROJECT	SHEET No.	TOTAL SHEETS
08	SBd	40	R119.0/R138.3	19	29

W E Wasser 8-20-12
REGISTERED CIVIL ENGINEER DATE

8-20-12
PLANS APPROVAL DATE

REGISTERED PROFESSIONAL ENGINEER W.E. WASSER No. 37378 Exp 6/30/14 CIVIL STATE OF CALIFORNIA

THE STATE OF CALIFORNIA OR ITS OFFICERS OR AGENTS SHALL NOT BE RESPONSIBLE FOR THE ACCURACY OR COMPLETENESS OF SCANNED COPIES OF THIS PLAN SHEET.

PAVEMENT DELINEATION QUANTITIES

POSTMILE LIMITS	LOCATION	DETAIL No. OR PAVEMENT MARKING	REMOVE THERMOPLASTIC PAVEMENT MARKING	REMOVE PAVEMENT MARKER	THERMOPLASTIC TRAFFIC STRIPE (SPRAYABLE)			PAVEMENT MARKER			THERMO-PLASTIC PAVEMENT MARKING
								NON-REFLECTIVE	RETROREFLECTIVE		
					4" YELLOW	4" WHITE	8" WHITE	TYPE A	TYPE G	TYPE H	
			SQFT	EA	LF	LF	LF	EA	EA	EA	SQFT
PM R119.0 TO PM R138.3	WB MAINLINE	13M		10,650		101,904		8,520	2,130		
		27B				101,904					
		25		2,130	101,904					2,130	
	EB MAINLINE	13M		10,650		101,904		8,520	2,130		
		27B				101,904					
		25		2,130	101,904					2,130	
		38		1,320			31,680		1,320		
		TYPE IV ARROW (3)	297								126.00
	WATER RD EB EXIT RAMP	25A		58	1,365					58	
		27B				1,650					
		36		26			552		26		
		TYPE V ARROW (2)	240								66.0
		"STOP" (2)	102								44.0
		"AHEAD" (1)	64								31.0
		LIMIT LINE	70								70.0
	WATER RD EB ENTRANCE RAMP	25A		42	975					42	
		27B				1,060					
		36A		15			325		15		
		8				180					
		TYPE I ARROW (1)	84								31.0
	WATER RD WB EXIT RAMP	25A		58	1,340					58	
		27B				1,640					
		36		25			570		25		
		TYPE V ARROW (2)	240								66.0
		"STOP" (2)	102								44.0
		"AHEAD" (1)	64								31.0
		LIMIT LINE	45								45.0
	WATER RD WB ENTRANCE RAMP	25A		67	1,570					67	
		27B				1,215					
		36A		16			340		16		
		8				240					
		TYPE I ARROW (1)	84								31.0
		SUBTOTAL	1,392	27,187	209,058	413,601	33,467	17,040	5,662	4,485	585.0

REVISED BY | DATE REVISED
PATTI BARTOLI | DARYUSH NAMI
CALCULATED-DESIGNED BY | CHECKED BY
FUNCTIONAL SUPERVISOR: BILL WASSER
STATE OF CALIFORNIA - DEPARTMENT OF TRANSPORTATION
Caltrans® TRAFFIC DESIGN

PAVEMENT DELINEATION QUANTITIES
PDQ-1

LAST REVISION 08-20-12 | DATE PLOTTED => 28-AUG-2012 | TIME PLOTTED => 13:39

Dist	COUNTY	ROUTE	POST MILES TOTAL PROJECT	SHEET No.	TOTAL SHEETS
08	SBd	40	R119.0/R138.3	20	29

W E Wasser 8-20-12
REGISTERED CIVIL ENGINEER DATE

8-20-12
PLANS APPROVAL DATE

REGISTERED PROFESSIONAL ENGINEER W.E. WASSER No. 37378 Exp 6/30/14 CIVIL STATE OF CALIFORNIA

THE STATE OF CALIFORNIA OR ITS OFFICERS OR AGENTS SHALL NOT BE RESPONSIBLE FOR THE ACCURACY OR COMPLETENESS OF SCANNED COPIES OF THIS PLAN SHEET.

PAVEMENT DELINEATION QUANTITIES

POSTMILE LIMITS	LOCATION	DETAIL No. OR PAVEMENT MARKING	REMOVE THERMOPLASTIC PAVEMENT MARKING	REMOVE PAVEMENT MARKER	THERMOPLASTIC TRAFFIC STRIPE (SPRAYABLE)			PAVEMENT MARKER			THERMO-PLASTIC PAVEMENT MARKING
								NON-REFLECTIVE	RETROREFLECTIVE		
					4" YELLOW	4" WHITE	8" WHITE	TYPE A	TYPE G	TYPE H	
			SQFT	EA	LF	LF	LF	EA	EA	EA	SQFT
PM R119.0 TO PM R138.3	RTE 95/40 SEPARATION EB EXIT RAMP	25A		58	1,350					58	
		27B				1,740					
		36		23			520		23		
		TYPE V ARROW (2)	240								66.0
		"STOP" (2)	102								44.0
		"AHEAD" (1)	64								31.0
		LIMIT LINE	50								50.0
	RTE 95/40 SEPARATION EB ENTRANCE RAMP	25A		52	1,225					52	
		27B				1,580					
		36A		17			364		17		
		8				220					
		TYPE I ARROW (1)	84								31.0
	RTE 95/40 SEPARATION WB EXIT RAMP	25A		54	1,270					54	
		27B				1,340					
		36		36			785		36		
		TYPE V ARROW (2)	240								66.0
		"STOP" (1)	51								22.0
		LIMIT LINE	50								50.0
	RTE 95/40 SEPARATION WB ENTRANCE RAMP	25A		47	1,090					47	
		27B				950					
		36A		28			637		28		
		8				235					
		TYPE I ARROW (1)	84								31.0
	MAINLINE AIRCRAFT MARKING	"120" (2)	24								15.8
		"125" (2)	24								16.7
		"130" (2)	24								16.0
		"135" (2)	24								16.8
		AIRCRAFT MARKING @ 5-MILE (4)	24								24.0
		AIRCRAFT MARKING @ 1-MILE (16)	96								96.0
SUB TOTAL			1,181	315	4,935	6,065	2,306		104	211	576.3
TOTAL			2,573	27,502	669,432			17,040	10,482		1,161.3

REVISED BY | DATE REVISED
PATTI BARTOLI | DARYUSH NAMI
CALCULATED-DESIGNED BY | CHECKED BY
FUNCTIONAL SUPERVISOR | BILL WASSER

STATE OF CALIFORNIA - DEPARTMENT OF TRANSPORTATION
Caltrans® TRAFFIC DESIGN

PAVEMENT DELINEATION QUANTITIES
PDQ-2

LAST REVISION 08-20-12 | DATE PLOTTED => 28-AUG-2012 | TIME PLOTTED => 13:40

Dist	COUNTY	ROUTE	POST MILES TOTAL PROJECT	SHEET No.	TOTAL SHEETS
08	SBd	40	R119.0/R138.3	21	29

W E Wasser 8-20-12
REGISTERED CIVIL ENGINEER DATE

8-20-12
PLANS APPROVAL DATE

REGISTERED PROFESSIONAL ENGINEER W.E. WASSER No. 37378 Exp 6/30/14 CIVIL STATE OF CALIFORNIA

THE STATE OF CALIFORNIA OR ITS OFFICERS OR AGENTS SHALL NOT BE RESPONSIBLE FOR THE ACCURACY OR COMPLETENESS OF SCANNED COPIES OF THIS PLAN SHEET.

NOTE:
1. GUARDRAIL DELINEATOR TO BE REMOVED WITH GUARDRAIL REMOVAL AND NOT A SEPARATE BID ITEM.
2. REMOVE MARKER BID ITEM INCLUDES L-MARKERS AND DELINEATORS.

DELINEATOR AND MARKER QUANTITIES

POSTMILE	DIRECTION	LOCATION	APPROACH ORIENTATION	DELINEATOR (CLASS 1) TYPE F EA	OBJECT MARKER TYPE L-1 (CA) EA	REMOVE MARKER EA	RESET MILEPOST MARKER EA
R119.51	EB	TANK TOWER DITCH (APP)	INSIDE SHLR	1	3	2	0
			OUTSIDE SHLR	0	3	2	1
R120.47	EB	HOMER WASH (APP)	INSIDE SHLR	0	3	3	0
			OUTSIDE SHLR	0	3	1	0
R125.12	EB	DRAINAGE/TERRIAN	INSIDE SHLR	42	2	1	0
			OUTSIDE SHLR	0	0	0	0
R125.37	EB	DRAINAGE/TERRIAN	INSIDE SHLR	0	0	0	0
			OUTSIDE SHLR	7	1	1	0
R125.95	EB	DRAINAGE/TERRAIN	INSIDE SHLR	0	0	0	0
			OUTSIDE SHLR	6	1	2	0
R126.00	EB	DRAINAGE/TERRAIN	INSIDE SHLR	2	2	0	0
			OUTSIDE SHLR	0	0	2	0
R126.51	EB	DRAINAGE/TERRAIN	INSIDE SHLR	4	2	2	0
			OUTSIDE SHLR	6	2	1	0
R127.21	EB	DRAINAGE/TERRIAN	INSIDE SHLR	0	0	0	0
			OUTSIDE SHLR	4	2	0	0
R129.82	EB	DRAINAGE/TERRIAN	INSIDE SHLR	0	3	3	0
			OUTSIDE SHLR	0	3	2	1
R131.84	EB	DRAINAGE/TERRIAN	INSIDE SHLR	1	2	1	0
			OUTSIDE SHLR	1	2	1	0
R132.18	EB	CRESTVIEW WASH (APP)	INSIDE SHLR	0	3	3	0
			OUTSIDE SHLR	0	3	2	1
R133.03	EB	HACIENDA WASH (APP)	INSIDE SHLR	0	3	1	0
			OUTSIDE SHLR	0	3	2	1
R133.24	EB	DRAINAGE/TERRIAN	INSIDE SHLR	1	2	2	0
			OUTSIDE SHLR	1	2	2	0
R134.00	EB	S FK PIUTE WASH (APP)	INSIDE SHLR	0	3	3	0
			OUTSIDE SHLR	0	3	3	1
R134.64	EB	DRAINAGE/TERRIAN	INSIDE SHLR	0	0	0	0
			OUTSIDE SHLR	6	1	1	0
R135.93	EB	JAVA OH (APP)	INSIDE SHLR	6	3	2	0
			OUTSIDE SHLR	13	3	3	1
R135.98	EB	JAVA OH (DEP)	INSIDE SHLR	19	2	1	0
			OUTSIDE SHLR	15	2	0	0
R138.26	EB	BUZZARD WASH (APP)	INSIDE SHLR	0	1	1	0
			OUTSIDE SHLR	0	1	1	1
			SUBTOTAL	135	69	51	7

PAVEMENT DELINEATION QUANTITIES
PDQ-3

STATE OF CALIFORNIA - DEPARTMENT OF TRANSPORTATION
Caltrans® TRAFFIC DESIGN

FUNCTIONAL SUPERVISOR: BILL WASSER
CALCULATED-DESIGNED BY: DARYUSH NAMI
CHECKED BY: PATTI BARTOLI
REVISED BY
DATE REVISED

LAST REVISION 08-20-12
DATE PLOTTED => 28-AUG-2012
TIME PLOTTED => 13:40

Dist	COUNTY	ROUTE	POST MILES TOTAL PROJECT	SHEET No.	TOTAL SHEETS
08	SBd	40	R119.0/R138.3	22	29

W E Wasser 8-20-12
REGISTERED CIVIL ENGINEER DATE

8-20-12
PLANS APPROVAL DATE

REGISTERED PROFESSIONAL ENGINEER W.E. WASSER No. 37378 Exp 6/30/14 CIVIL STATE OF CALIFORNIA

THE STATE OF CALIFORNIA OR ITS OFFICERS OR AGENTS SHALL NOT BE RESPONSIBLE FOR THE ACCURACY OR COMPLETENESS OF SCANNED COPIES OF THIS PLAN SHEET.

DELINEATOR AND MARKER QUANTITIES

POSTMILE	DIRECTION	LOCATION	APPROACH ORIENTATION	DELINEATOR (CLASS 1) TYPE F EA	OBJECT MARKER TYPE L-1 (CA) EA	REMOVE MARKER EA	RESET MILEPOST MARKER EA
R119.51	WB	TANK TOWER DITCH (APP)	INSIDE SHLR	0	3	3	0
			OUTSIDE SHLR	0	3	1	0
R120.53	WB	HOMER WASH (APP)	INSIDE SHLR	0	3	2	0
			OUTSIDE SHLR	0	3	1	1
R123.13	WB	DRAINAGE/TERRIAN	INSIDE SHLR	0	0	0	0
			OUTSIDE SHLR	11	0	1	1
R123.40	WB	DRAINAGE/TERRIAN	INSIDE SHLR	0	0	0	0
			OUTSIDE SHLR	8	3	1	0
R125.14	WB	DRAINAGE/TERRAIN	INSIDE SHLR	0	0	0	0
			OUTSIDE SHLR	1	3	1	0
R125.41	WB	DRAINAGE/TERRAIN	INSIDE SHLR	0	0	0	0
			OUTSIDE SHLR	1	2	1	0
R125.84	WB	DRAINAGE/TERRAIN	INSIDE SHLR	32	2	2	0
			OUTSIDE SHLR	0	0	0	0
R126.05	WB	DRAINAGE/TERRIAN	INSIDE SHLR	7	1	1	0
			OUTSIDE SHLR	5	1	0	1
R126.30	WB	DRAINAGE/TERRIAN	INSIDE SHLR	8	2	0	0
			OUTSIDE SHLR	0	0	1	0
R126.95	WB	DRAINAGE/TERRIAN	INSIDE SHLR	0	0	0	0
			OUTSIDE SHLR	1	2	1	0
R127.76	WB	DRAINAGE/TERRIAN	INSIDE SHLR	10	2	2	0
			OUTSIDE SHLR	14	2	1	0
R128.88	WB	CANTILEVER SIGN	INSIDE SHLR	0	0	0	0
			OUTSIDE SHLR	1	2	1	0
R129.80	WB	ARBOL DITCH (APP)	INSIDE SHLR	0	3	2	0
			OUTSIDE SHLR	0	3	2	1
R131.59	WB	CANTILEVER SIGN	INSIDE SHLR	0	0	0	0
			OUTSIDE SHLR	1	2	1	0
R132.25	WB	CRESTVIEW WASH (APP)	INSIDE SHLR	0	3	3	0
			OUTSIDE SHLR	1	3	2	1
R132.73	WB	JCT 95 OC	INSIDE SHLR	2	0	2	0
			OUTSIDE SHLR	0	0	0	0
R133.08	WB	HACIENDA WASH (APP)	INSIDE SHLR	0	3	2	0
			OUTSIDE SHLR	2	3	2	1
R133.27	WB	DRAINAGE/TERRIAN	INSIDE SHLR	1	2	2	0
			OUTSIDE SHLR	1	2	0	0
			SUBTOTAL	107	58	38	6

DELINEATOR AND MARKER QUANTITIES

POSTMILE	DIRECTION	LOCATION	APPROACH ORIENTATION	DELINEATOR (CLASS 1) TYPE F EA	OBJECT MARKER TYPE L-1 (CA) EA	REMOVE MARKER EA	RESET MILEPOST MARKER EA
R134.03	WB	S FK PIUTE WASH (APP)	INSIDE SHLR	0	3	2	0
			OUTSIDE SHLR	0	3	2	1
R134.84	WB	DRAINAGE/TERRIAN	INSIDE SHLR	0	0	0	0
			OUTSIDE SHLR	11	2	1	0
R135.12	WB	DRAINAGE/TERRIAN	INSIDE SHLR	0	0	0	0
			OUTSIDE SHLR	3	2	1	0
R135.41	WB	DRAINAGE/TERRIAN	INSIDE SHLR	0	0	0	0
			OUTSIDE SHLR	3	2	1	0
R135.88	WB	JAVA OH (DEP)	INSIDE SHLR	5	2	2	0
			OUTSIDE SHLR	12	2	0	0
R135.93	WB	JAVA OH (APP)	INSIDE SHLR	19	3	2	0
			OUTSIDE SHLR	22	3	2	1
R138.30	WB	BUZZARD WASH (APP)	INSIDE SHLR	1	1	2	0
			OUTSIDE SHLR	1	1	2	1
			SUBTOTAL	77	24	17	3
			TOTAL	319	151	106	16

PAVEMENT DELINEATION QUANTITIES
PDQ-4

STATE OF CALIFORNIA - DEPARTMENT OF TRANSPORTATION
Caltrans® TRAFFIC DESIGN

FUNCTIONAL SUPERVISOR: BILL WASSER
CALCULATED-DESIGNED BY: PATTI BARTOLI
CHECKED BY: DARYUSH NAMI
REVISED BY
DATE REVISED

LAST REVISION 08-20-12
DATE PLOTTED => 28-AUG-2012
TIME PLOTTED => 13:40

Dist	COUNTY	ROUTE	POST MILES TOTAL PROJECT	SHEET No.	TOTAL SHEETS
08	SBd	40	R119.0/R138.3	23	29

Kamal Mchantaf 8-20-12
REGISTERED CIVIL ENGINEER DATE

8-20-12
PLANS APPROVAL DATE

REGISTERED PROFESSIONAL ENGINEER KAMAL MCHANTAF No. C51050 Exp. 9/30/13 CIVIL STATE OF CALIFORNIA

THE STATE OF CALIFORNIA OR ITS OFFICERS OR AGENTS SHALL NOT BE RESPONSIBLE FOR THE ACCURACY OR COMPLETENESS OF SCANNED COPIES OF THIS PLAN SHEET.

METAL BEAM GUARD RAILING QUANTITIES

POST MILE	LOCATION	BRIDGE NUMBER	DIRECTION	Exist BRIDGE RAILING	LAYOUT TYPE		RECONSTRUCT MBGR		MBGR (WOOD POST)		ALT INLINE TERMINAL SYSTEM		ALT FLARED TERMINAL SYSTEM		BURIED POST ANCHOR (N)		TRANSITION RAILING (TYPE WB)		END CAP (TYPE TC)		END ANCHOR ASSEMBLY (TYPE SFT)		END CAP (TYPE A)		REMOVE MBGR		MINOR CONCRETE (MINOR STRUCTURE)		PLACE HMA DIKE (TYPE C)		PLACE HMA DIKE (TYPE F)		HMA (FOR AC DIKES & MISC AREAS)		REMOVE AC DIKE	
							LF		LF		EA		EA		EA		EA		EA		EA		EA		LF		CY		LF		LF		TON		LF	
				Type	LT	RT	LT	RT	LT	RT	LT	RT	LT	RT	LT	RT	LT	RT	LT	RT	LT	RT	LT	RT	LT	RT	LT	RT	LT	RT	LT	RT	LT	RT	LT	RT
R119.51	TANK TOWER DITCH (APP)	54-202R	EB	TYPE 9	12B	12B	100	63	175.0				1	1			1	1	1	1					62.5	62.5	1	1		38		88		2		125
R119.53	TANK TOWER DITCH (DEP)	54-202R	EB	TYPE 9																																
R119.98	WATER RD. OC	54-856	EB																						0	0										
R120.47	HOMER WASH (APP)	54-203R	EB	TYPE 9	12B	12B	88	63	187.5				1	1			1	1	1	1					62.5	62.5	1	1				26		1		26
R120.52	HOMER WASH (DEP)	54-203R	EB	TYPE 9																					0	0										
R125.123	DRAINAGE/TERRAIN		EB		11B		4163						1								1				37.5	0					540		8		540	
R125.370	DRAINAGE/TERRAIN					11C		745								1						1			0	0						745		10		745
R125.947	DRAINAGE/TERRAIN		EB			11C		615								1						1			0	0						412		6		412
R126.004	DRAINAGE/TERRAIN				11B		238						1								1				37.5	0										
R126.507	DRAINAGE/TERRAIN		EB		11B	11B	413	563					1	1							1	1			37.5	37.5					355		5		355	
R127.21	DRAINAGE/TERRAIN					11B		388						1								1			0	37.5						310		5		310
R129.82	ARBOL DITCH (APP)	54-204R	EB	TYPE 9	12B	12B	88	38	187.5				1	1			1	1	1	1					62.5	62.5	1	1								
R129.84	ARBOL DITCH (DEP)	54-204R	EB	TYPE 9																					0	0										
R131.842	DRAINAGE/TERRIAN		EB		11B	11B	63	63					1	1							1	1			37.5	37.5										
R132.18	CRESTVIEW WASH (APP)	54-207R		TYPE 9	12B	12B	63	88	212.5				1	1			1	1	1	1					62.5	62.5	1	1								
R132.25	CRESTVIEW WASH (DEP)	54-207R	EB	TYPE 9																					0	0										
R132.74	JCT 95 OC	54-870																							0	0										
R133.03	HACIENDA WASH (APP)	54-871R	EB	TYPE 9	12B	12B	25	25	250.0				1	1			1	1	1	1					62.5	62.5	1	1								
R133.06	HACIENDA WASH (DEP)	54-871R	EB	TYPE 9																					0	0										
R133.237	DRAINAGE/TERRAIN		EB		11B	11B	88	63					1	1							1	1			37.5	37.5										
R134.00	S FK PIUTE WASH (APP)	54-872R	EB	TYPE 9	12B	12B	88	50	187.5				1	1			1	1	1	1					62.5	62.5	1	1								
R134.02	S FK PIUTE WASH (DEP)	54-872R	EB	TYPE 9																					0	0										
R134.637	DRAINAGE/TERRAIN		EB			11C		645								1						1			0	0										
R135.93	JAVA OH (APP)	54-873R	EB	TYPE 9	12B	12B	638	1313					1	1			1	1	1	1					62.5	62.5	1	1		38		1338		19		1375
R135.98	JAVA OH (DEP)	54-873R	EB	TYPE 9	12DD	12DD	1913	1475													1	1	1	1	0	0	1	1				1475		20		1475
R138.26	BUZZARD WASH (APP)	54-700	EB	TYPE 1	12A	12A	25	50	250.0		1	1					1	1	1	1					75	75	1	1				125		2		125
R138.30	BUZZARD WASH (DEP)	54-700	EB	TYPE 1																					0	0										
SUB-TOTAL (EB)							14231		1450.0		2		23		3		16		16		14		2		1363		16		75		5413		78		5488	

(N) NOT A SEPARATE PAY ITEM

SUMMARY OF QUANTITIES
Q-1

STATE OF CALIFORNIA - DEPARTMENT OF TRANSPORTATION
Caltrans MAINTENANCE DESIGN

FUNCTIONAL SUPERVISOR: MICHAEL RISTIC
CALCULATED-DESIGNED BY: KAMAL MCHANTAF
CHECKED BY: MICHAEL RISTIC
REVISED BY
DATE REVISED

LAST REVISION 08-20-12
DATE PLOTTED => 28-AUG-2012
TIME PLOTTED => 13:40

Dist	COUNTY	ROUTE	POST MILES TOTAL PROJECT	SHEET No.	TOTAL SHEETS
08	SBd	40	R119.0/R138.3	24	29

Kamal Mchantaf 8-20-12
REGISTERED CIVIL ENGINEER DATE

8-20-12
PLANS APPROVAL DATE

REGISTERED PROFESSIONAL ENGINEER KAMAL MCHANTAF No. C51050 Exp. 9/30/13 CIVIL STATE OF CALIFORNIA

THE STATE OF CALIFORNIA OR ITS OFFICERS OR AGENTS SHALL NOT BE RESPONSIBLE FOR THE ACCURACY OR COMPLETENESS OF SCANNED COPIES OF THIS PLAN SHEET.

METAL BEAM GUARD RAILING QUANTITIES

POST MILE	LOCATION	BRIDGE NUMBER	DIRECTION	Exist BRIDGE RAILING	LAYOUT TYPE		RECONSTRUCT MBGR (LF)		MBGR (WOOD POST) (LF)		ALT INLINE TERMINAL SYSTEM (EA)		ALT FLARED TERMINAL SYSTEM (EA)		BURIED POST ANCHOR (N) (EA)		TRANSITION RAILING (TYPE WB) (EA)		END CAP (TYPE TC) (EA)		END ANCHOR ASSEMBLY (TYPE SFT) (EA)		END CAP (TYPE A) (EA)		REMOVE MBGR (LF)		MINOR CONCRETE (MINOR STRUCTURE) (CY)		PLACE HMA DIKE (TYPE C) (LF)		PLACE HMA DIKE (TYPE F) (LF)		HMA (FOR AC DIKES & MISC AREAS) (TON)		REMOVE AC DIKE (LF)	
				TYPE	LT	RT	LT	RT	LT	RT	LT	RT	LT	RT	LT	RT	LT	RT	LT	RT	LT	RT	LT	RT	LT	RT	LT	RT	LT	RT	LT	RT	LT	RT	LT	RT	LT	RT
R119.50	TANK TOWER DITCH (DEP)	54-202L		TYPE 9																																		
R119.51	TANK TOWER DITCH (APP)	54-202L		TYPE 9	12B	12B	88	63	187.5				1	1			1	1	1	1					63	63	1	1		38		88		2		125
R119.98	WATER RD. OC	54-856	WB																																			
R120.48	HOMER WASH (DEP)	54-203L	WB	TYPE 9																																		
R120.53	HOMER WASH (APP)	54-203L	WB	TYPE 9	12B	12B	75	63	200.0				1	1			1	1	1	1					63	63	1	1										
R123.127	DRAINAGE/TERRAIN		WB			11A		1075				1										1				50				57		565		8		622
R124.505	DRAINAGE/TERRAIN		WB			11B		813						1								1				38				46		804		12		850
R125.144	DRAINAGE/TERRAIN		WB			11		163						1								1				38										
R125.407	DRAINAGE/TERRAIN		WB			11B		113						1								1				38										
R125.844	DRAINAGE/TERRAIN		WB		11B		3163						1								1				38						3035		41		3035	
R126.051	DRAINAGE/TERRAIN		WB		11C	11C	725	488							1	1					1	1										366		5		366
R126.295	DRAINAGE/TERRAIN		WB		11B		825						1								1				38						768		11		768	
R126.947	DRAINAGE/TERRAIN		WB			11B		113						1								1				38										
R127.764	DRAINAGE/TERRAIN		WB		11B	11B	963	1375					1	1							1	1			38	38						1334		18		1334
R128.881	CANTILEVER SIGHN		WB			11B		38						1								1				38										
R129.78	ARBOL DITCH (DEP)	54-204L	WB	TYPE 9																																		
R129.80	ARBOL DITCH (APP)	54-204L	WB	TYPE 9	12B	12B	75	63	200.0				1	1			1	1	1	1					63	63	1	1				30		1		30
R131.585	CANTILEVER SIGN		WB			11B		38						1								1				38										
R132.19	CRESTVIEW WASH (DEP)	54-207L	WB	TYPE 9																																		
R132.25	CRESTVIEW WASH (APP)	54-207L	WB	TYPE 9	12B	12B	88	125	187.5				1	1			1	1	1						63	63	1	1				40		1		40
R132.73	JCT 95 OC	54-870	WB																																			
R133.05	HACIENDA WASH (DEP)	54-871L	WB	TYPE 9	12B	12B																																
R133.08	HACIENDA WASH (APP)	54-871L	WB	TYPE 9	12B	12B		175	275.0				1	1			1	1	1	1					63	63	1	1										
R133.274	DRAINAGE/TERRAIN		WB		11B	11B	25	38					1	1							1	1			38	38												
R134.01	S FK PIUTE WASH (DEP)	54-872L	WB	TYPE 9																																		
R134.03	S FK PIUTE WASH (APP)	54-872L	WB	TYPE 9	12B	12B	25	25	250.0				1	1			1	1	1	1					63	63	1	1				8		1		8
R134.838	DRAINAGE/TERRAIN		WB			11B		1100						1								1				38						1012		14		1012
R135.122	DRAINAGE/TERRAIN		WB			11B		263						1								1				38						175		3		175
R134.41	DRAINAGE/TERRAIN		WB			11B		288						1								1				38						193		3		193
R135.88	JAVA OH(DEP)	54-873L	WB	TYPE 9	12DD	12DD	525	1175					1														1	1			525	981	8	14	525	981
R135.93	JAVA OH (APP)	54-873L	WB	TYPE 9	12B	12B	1888	2238						1			1	1	1	1					63	63	1	1	38		1913		26		1950	
R138.26	BUZZARD WASH (DEP)	54-700	WB	TYPE 1																																		
R138.30	BUZZARD WASH (APP)	54-700	WB	TYPE 1	12A	12A	100	150	175.0		1	1					1	1	1	1					75	75	1	1				225		3.0		225
		SUB-TOTAL (WB)					18538		1475.0		3		29		2		16		16		18				1638		16		179		12062		172		12239	
		SUB-TOTAL (EB) FROM SHEET Q-1					14231		1450.0		2		23		3		16		16		14		2		1363		16		75		5413		78		5488	
		TOTAL (WB and EB)					32769		2925.0		5		52		5		32		32		32		2		3001		32		254		17475		250*		17727*	

(N) NOT A SEPARATE PAY ITEM

* THE OVERALL TOTAL QUANTITIES FOR THE ITEM(S) ARE ON SHEET Q-4

SUMMARY OF QUANTITIES Q-2

REVISED BY | DATE REVISED
KAMAL MCHANTAF | MICHAEL RISTIC
CALCULATED-DESIGNED BY | CHECKED BY
FUNCTIONAL SUPERVISOR: MICHAEL RISTIC
STATE OF CALIFORNIA - DEPARTMENT OF TRANSPORTATION
Caltrans® MAINTENANCE DESIGN

LAST REVISION 08-20-12 | DATE PLOTTED => 28-AUG-2012 | TIME PLOTTED => 13:40

Dist	COUNTY	ROUTE	POST MILES TOTAL PROJECT	SHEET No.	TOTAL SHEETS
08	SBd	40	R119.0/R138.3	25	29

Kamal Mchantaf 8-20-12
REGISTERED CIVIL ENGINEER DATE

8-20-12
PLANS APPROVAL DATE

REGISTERED PROFESSIONAL ENGINEER KAMAL MCHANTAF No. C51050 Exp. 9/30/13 CIVIL STATE OF CALIFORNIA

THE STATE OF CALIFORNIA OR ITS OFFICERS OR AGENTS SHALL NOT BE RESPONSIBLE FOR THE ACCURACY OR COMPLETENESS OF SCANNED COPIES OF THIS PLAN SHEET.

MAINLINE AND RAMPS

ROUTE	POSTMILE FROM	POSTMILE TO	LOCATIONS/ DIRECTION	LENGTH (FT)	TRAVELED WAY WIDTH (FT)	SHOULDERS WIDTH (FT) LT	SHOULDERS WIDTH (FT) RT	RUMBLE STRIP (STA)	COLDPLANE AC PAVEMENT (SQYD)	RUBBERIZED HOT MIX ASPHALT (GAP GRADED) 0.10′ (TON)	RUBBERIZED HOT MIX ASPHALT (GAP GRADED) 0.15′ (TON)	HMA (TYPE C) 0.25′ (TON)	HMA (TYPE C) 0.4′ (TON)	TACK COAT (TON)
40			Water Rd. EB Off-Ramp	1634	12	2	8		3994		404			1.2
40			Water Rd. EB On-Ramp	1533	12	2	8		3747		379			1.1
40			Water Rd. WB Off-Ramp	1617	12	2	8		3953		400			1.2
40			Water Rd. WB On-Ramp	1773	12	2	8		4334		439			1.3
40			JCT 95 EB On-Ramp	1485	12	2	8		3630			613		1.1
40			JCT 95 EB On-Ramp	1794	12	2	8		4385			740		1.3
40			JCT 95 WB Off-Ramp	1540	12	2	8		3764			635		1.1
40			JCT 95 WB On-Ramp	1705	12	2	8		4168			703		1.2
40	119	124.5	EB	29040	24	5	10	581	77440	8494		13068		37
40	124.5	131.6	EB	37488	24	5	10	750	99968	10965			26991	47
40	131.6	138.3	EB	35376	24	5	10	708	94336	10347		7960	25471	45
40	119	124.5	WB	29040	24	5	10	581	77440	8494		13068		37
40	124.5	131.6	WB	37488	36	5	10	750	149952	14339			40487	62
40	131.6	138.3	WB	35376	24	5	10	708	94336	10347		7960	12735	45
							TOTAL	4076	625448	64611		150431		281

SEAL COAT (RUBBERIZED)

ROUTE	POSTMILE FROM	POSTMILE TO	DIRECTION	LENGTH (FT)	TRAVELED WAY WIDTH (FT)	ASPHALT-RUBBER BINDER (TON)	SCREENING (HOT APPLIED) (TON)	ASPHALTIC EMULSION (FOG SEAL COAT) (TON)	SAND COVER (TON)
40	119	124.5	EB	29040	24	194	1355	10	232
40	119	124.5	WB	29040	24	194	1355	10	232
					TOTAL	387	2710	19	465

SHOULDER BACKING

ROUTE	POSTMILE FROM	POSTMILE TO	LENGTH (FT)	SHOULDER BACKING (TON)
40	119	138.3	101904	4433
			TOTAL	4433

CONCRETE RAMP TERMINI

ROUTE	PM	RAMP	LENGTH (FT)	WIDTH (FT)	LEAN CONCRETE BASE RAPID SETTING (CY)	JOINTED PLAIN CONCRETE PAVEMENT (RAMP TERMINI RAPID STRENGTH CONCRETE) (CY)	ROADWAY EXCAVTION (CY)	SEAL PAVEMENT JOINT (LF)	PLASTIC POLYETHYLENE BOND BREAKER (N) (SQYD)
40	R136.50	RTE 95 EASTBOUND OFF-RAMP	150	24	80	120	200	405	400
				TOTAL	80	120	200*	405	400

(N) NOT A SEPARATE PAY ITEM, FOR INFORMATION ONLY
* THE OVERALL TOTAL QUANTITIES FOR THE ITEM(S) ARE ON SHEET Q-4

STORM WATER POLLUTION CONTROL

ITEM DESCRIPTION	UNIT	QUANTITY
TEMPORARY CONCRETE WASHOUT BIN	EA	1

SUMMARY OF QUANTITIES
Q-3

REVISED BY | DATE REVISED
KAMAL MCHANTAF | MICHAEL RISTIC
CALCULATED-DESIGNED BY | CHECKED BY
FUNCTIONAL SUPERVISOR: MICHAEL RISTIC
STATE OF CALIFORNIA - DEPARTMENT OF TRANSPORTATION
Caltrans MAINTENANCE DESIGN

LAST REVISION 08-20-12 | DATE PLOTTED => 28-AUG-2012 | TIME PLOTTED => 13:40

Dist	COUNTY	ROUTE	POST MILES TOTAL PROJECT	SHEET No.	TOTAL SHEETS
08	SBd	40	R119.0/R138.3	26	29

Kamal Mchantaf 8-20-12
REGISTERED CIVIL ENGINEER DATE

8-20-12
PLANS APPROVAL DATE

REGISTERED PROFESSIONAL ENGINEER KAMAL MCHANTAF No. C51050 Exp. 9/30/13 CIVIL STATE OF CALIFORNIA

THE STATE OF CALIFORNIA OR ITS OFFICERS OR AGENTS SHALL NOT BE RESPONSIBLE FOR THE ACCURACY OR COMPLETENESS OF SCANNED COPIES OF THIS PLAN SHEET.

OVERSIDE DRAINS AND DOWN DRAINS

LOCATION / PM				DIRECTION	NO. OF LOCATIONS		TOTAL LENGTH		ROADWAY EXCAVATION		PLACE HMA (MISC AREA)		HMA (FOR AC DIKES & MISC AREAS)		DESCRIPTION
					EA		LF		CY		SQYD		TON		
FROM		TO			LT	RT	LT	RT	LT	RT	LT	RT	LT	RT	
Project Limit	R119.0	BUZZARD WASH	R138.3	EB	2	21	45	420	1.9	18.0	22.3	214.7	3.78	36.38	RECONSTRUCT HMA OVERSIDE DRAINS PER STD. D87D
Project Limit	R119.0	BUZZARD WASH	R138.3	WB	2	13	30	350	1.4	13.9	16.8	165.9	2.84	28.13	
Project Limit	R119.0	BUZZARD WASH	R138.3	EB	1	19			0.3	5.3	3.3	63.3	0.56	10.69	RECONSTRUCT GUTTER FLARE AT DOWNDRAIN PER STD. D87A
Project Limit	R119.0	BUZZARD WASH	R138.3	WB	15	32			4.2	8.9	50.0	106.7	8.44	18.00	
TOTAL FROM SHEET Q-3									200						
TOTAL									254		643		109*		

* THE OVERALL TOTAL QUANTITIES FOR THE ITEM(S) ARE ON THE BELOW TABLE THIS SHEET

HMA DIKE

LOCATION/PM				DIR	PLACE HMA DIKE (TYPE D)		HMA (FOR AC DIKES & MISC AREAS)		REMOVE AC DIKE	
					LF		TON		LF	
FROM		TO			LT	RT	LT	RT	LT	RT
PROJECT LIMIT	R119.00	TANK TOWER DITCH	R119.51	EB		17		2		17
TANK TOWER DITCH	R119.53	HOMER WASH	R120.47	EB		87		6		87
HOMER WASH	R120.52	ARBOL DITCH	R129.82	EB	459	2155	28	128	459	2155
ARBOL DITCH	R129.84	CRESTVIEW WASH	R132.18	EB		51		4		51
CRESTVIEW WASH	R132.25	HACIENDA WASH	R133.03	EB						
HACIENDA WASH	R133.06	S FK PIUTE WASH	R134.00	EB						
S FK PIUTE WASH	R134.02	JAVA OH	R135.93	EB		4983		296		4983
JAVA OH	R135.98	BUZZARD WASH	R138.26	EB		9132		542		9132
PROJECT LIMIT	R119.00	TANK TOWER DITCH	R119.50	WB		221		14		221
TANK TOWER DITCH	R119.51	HOMER WASH	R120.48	WB		46		3		46
HOMER WASH	R120.53	ARBOL DITCH	R129.78	WB		7445		442		7445
ARBOL DITCH	R129.80	CRESTVIEW WASH	R132.19	WB		33		2		33
CRESTVIEW WASH	R132.25	HACIENDA WASH	R133.05	WB						
HACIENDA WASH	R133.08	S FK PIUTE WASH	R134.01	WB		1456		87		1456
S FK PIUTE WASH	R134.03	JAVA OH	R135.88	WB	196	1451	12	87	196	1451
JAVA OH	R135.93	BUZZARD WASH	R138.26	WB	2225	1906	133	114	2225	1906
SUB-TOTAL					31863		1900		31863	
TOTAL FROM SHEET Q-2							250		17727	
TOTAL FROM ABOVE TABLE THIS SHEET							109			
TOTAL					31863		2259		49590	

SUMMARY OF QUANTITIES
Q-4

REVISED BY | DATE REVISED
KAMAL MCHANTAF | MICHAEL RISTIC
CALCULATED-DESIGNED BY | CHECKED BY
FUNCTIONAL SUPERVISOR
MICHAEL RISTIC
STATE OF CALIFORNIA - DEPARTMENT OF TRANSPORTATION
Caltrans® MAINTENANCE DESIGN

LAST REVISION 08-20-12 | DATE PLOTTED => 28-AUG-2012 TIME PLOTTED => 13:40

Dist	COUNTY	ROUTE	POST MILES TOTAL PROJECT	SHEET No.	TOTAL SHEETS
08	SBd	40	R119.0/R138.3	27	29

REGISTERED ELECTRICAL ENGINEER 8-20-12 DATE

8-20-12
PLANS APPROVAL DATE

REGISTERED PROFESSIONAL ENGINEER
FERDINAND DE LA CRUZ
No. E17215
Exp. 6-30-12
ELECTRICAL
STATE OF CALIFORNIA

THE STATE OF CALIFORNIA OR ITS OFFICERS OR AGENTS SHALL NOT BE RESPONSIBLE FOR THE ACCURACY OR COMPLETENESS OF SCANNED COPIES OF THIS PLAN SHEET.

PROJECT NOTES:

1. THE CONTRACTOR SHALL CONTACT THE ENGINEER THREE WORKING DAYS PRIOR TO INSTALLING DETECTOR LOOPS
2. EXISTING INDUCTIVE LOOP DETECTORS SHOWN TO BE REPLACED SHALL BE AB
3. LABEL CONDUCTOR ENDS AS PER STANDARD PLAN ES-13B.

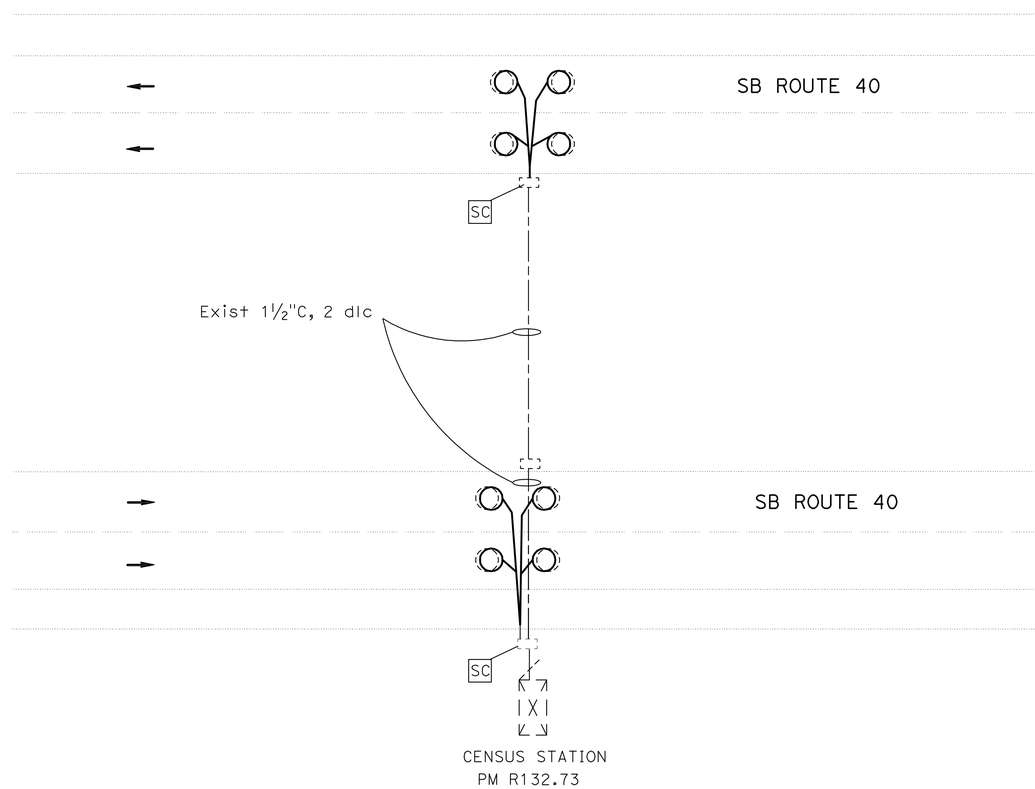

APPROVED FOR ELECTRICAL WORK ONLY

INDUCTIVE LOOP DETECTOR

NO SCALE

E-1

STATE OF CALIFORNIA - DEPARTMENT OF TRANSPORTATION
Caltrans® **ELECTRICAL DESIGN B**

FUNCTIONAL SUPERVISOR: FERDINAND DE LA CRUZ

CALCULATED-DESIGNED BY: LUIS PENALOZA, JR.
CHECKED BY: FERDINAND DE LA CRUZ

REVISED BY
DATE REVISED

LAST REVISION 08-20-12
DATE PLOTTED => 28-AUG-2012
TIME PLOTTED => 13:40

DIST	COUNTY	ROUTE	POST MILES TOTAL PROJECT	SHEET NO.	TOTAL SHEETS
08	SBd	40	R119.0/R138.3	28	29

REGISTERED CIVIL ENGINEER

April 20, 2012
PLANS APPROVAL DATE

The State of California or its officers or agents shall not be responsible for the accuracy or completeness of electronic copies of this plan sheet.

REGISTERED PROFESSIONAL ENGINEER William K. Farnbach No. C49042 Exp. 9-30-12 CIVIL STATE OF CALIFORNIA

To accompany plans dated 8-20-12

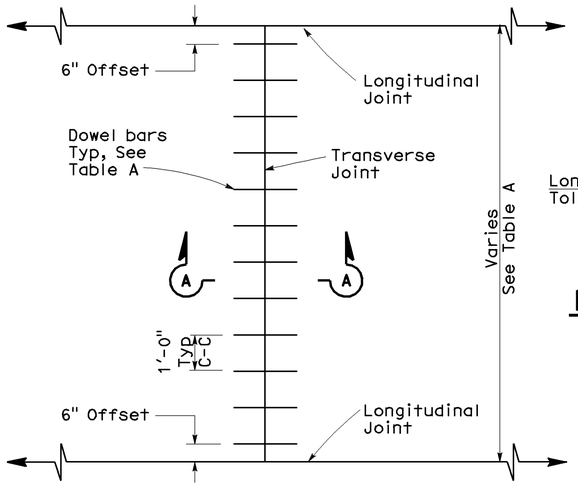

TRANSVERSE JOINT DOWEL BAR LAYOUT

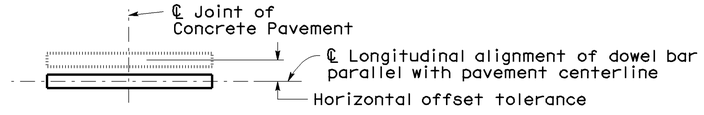

PLAN

HORIZONTAL OFFSET TOLERANCE

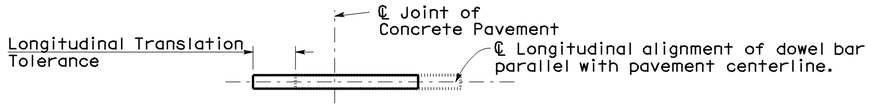

PLAN

LONGITUDINAL TRANSLATION TOLERANCE

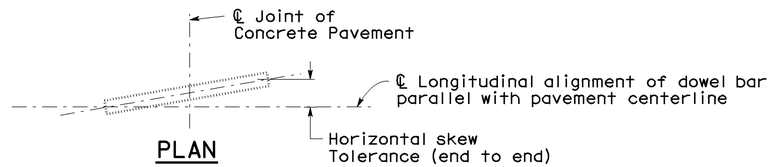

PLAN

HORIZONTAL SKEW TOLERANCE

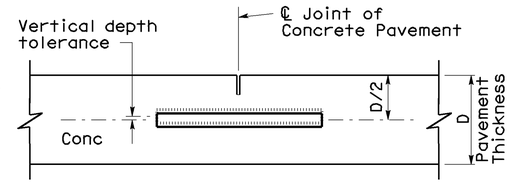

ELEVATION

VERTICAL DEPTH TOLERANCE

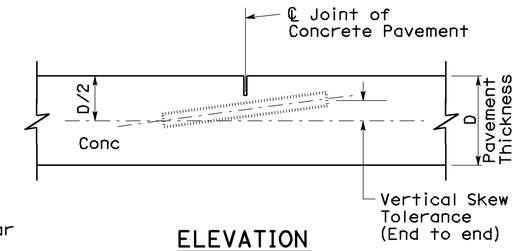

ELEVATION

VERTICAL SKEW TOLERANCE

NOTES:

1. See Revised Standard Plan RSP P1 for typical dowel bar placement and locations.
2. 1½" Dia dowel bars are to be used with a pavement thickness, D, equal to or greater than 0.70 feet. For pavement thickness, D, less than 0.70 feet, use 1¼" Dia dowel bars.
3. For widths not shown, see Project Plans.
4. If fresh concrete pavement is placed adjacent to existing concrete pavement, the top corner of the existing concrete pavement does not need to be rounded to the ¼" radius, as shown.
5. May also use ¾" Dia dowel bars 2'-4" ± ¼" in length. Center the length of dowel bars at the centerline of longitudinal joint.

TABLE A (See Note 3)

Dowel Bar Transverse Spacing Table	
Width between Longitudinal Joints	Number of Dowels between Longitudinal Joints
14'-0"	14
13'-0"	13
12'-0"	12
11'-0"	11
10'-0"	10
8'-0"	8
5'-0"	5
4'-0"	4

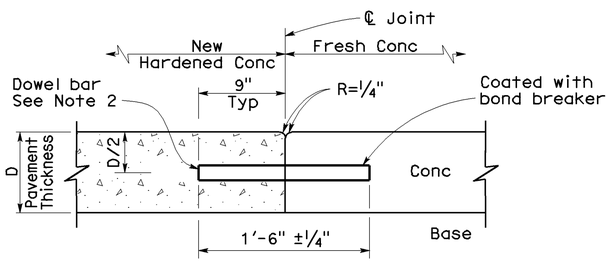

SECTION A-A

TRANSVERSE CONSTRUCTION JOINT DETAIL

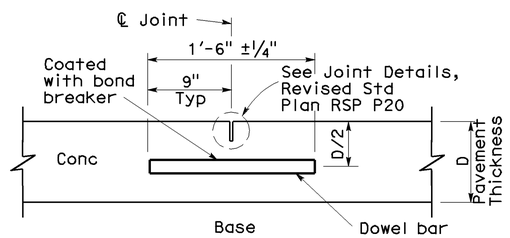

TRANSVERSE CONTRACTION JOINT

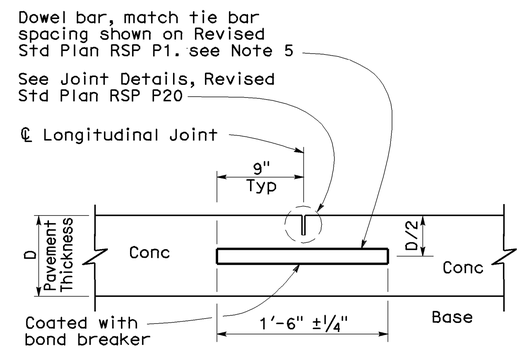

LONGITUDINAL CONTRACTION JOINT WITH DOWEL BARS

See Revised Std Plan RSP P18

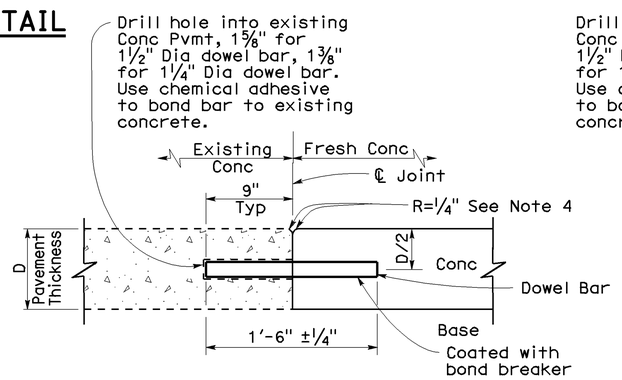

TRANSVERSE CONSTRUCTION JOINT FOR EXISTING CONCRETE PAVEMENT

Drill and bond locations

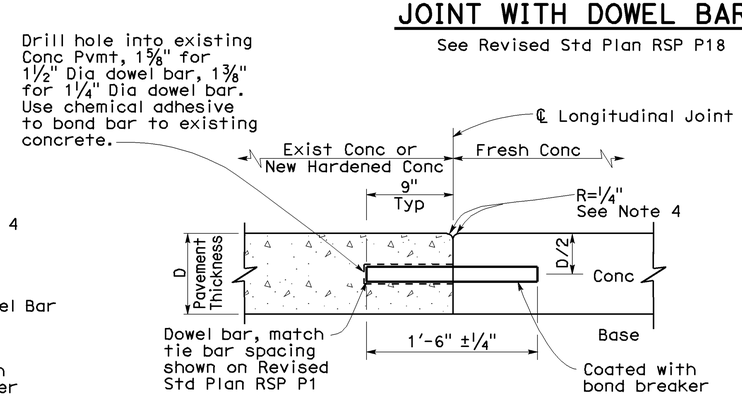

LONGITUDINAL CONSTRUCTION JOINT WITH DOWEL BARS

See Revised Std Plan RSP P18

STATE OF CALIFORNIA
DEPARTMENT OF TRANSPORTATION

CONCRETE PAVEMENT-DOWEL BAR DETAILS

NO SCALE

RSP P10 DATED APRIL 20, 2012 SUPERSEDES RSP P10 DATED MAY 15, 2009 AND STANDARD PLAN P10 DATED MAY 1, 2006 - PAGE 124 OF THE STANDARD PLANS BOOK DATED MAY 2006.

REVISED STANDARD PLAN RSP P10

2006 REVISED STANDARD PLAN RSP P10

2-22-12

DIST	COUNTY	ROUTE	POST MILES TOTAL PROJECT	SHEET NO.	TOTAL SHEETS
08	SBd	40	R119.0/R138.3	29	29

William K. Farnbach
REGISTERED CIVIL ENGINEER

April 20, 2012
PLANS APPROVAL DATE

REGISTERED PROFESSIONAL ENGINEER
William K. Farnbach
No. C49042
Exp. 9-30-12
CIVIL
STATE OF CALIFORNIA

The State of California or its officers or agents shall not be responsible for the accuracy or completeness of electronic copies of this plan sheet.

To accompany plans dated 8-20-12

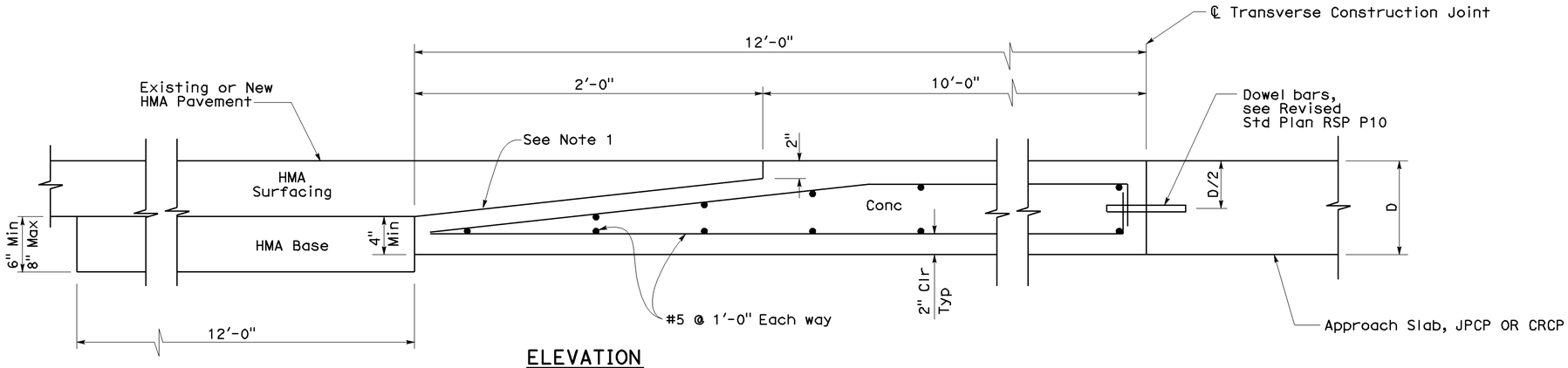

ELEVATION

CONCRETE PAVEMENT TRANSITION PANEL

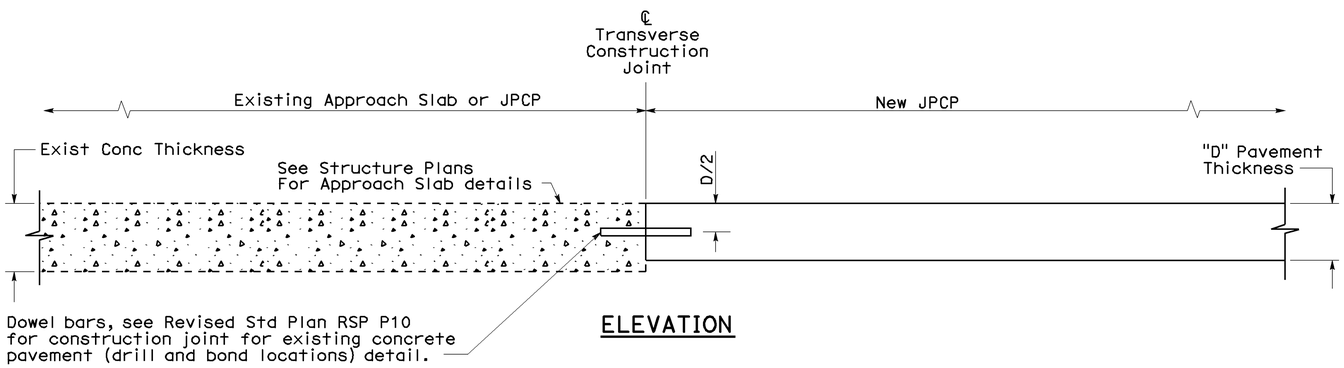

ELEVATION

TERMINAL JOINT TYPE 1

For Exist JPCP or Structure Approach Slab

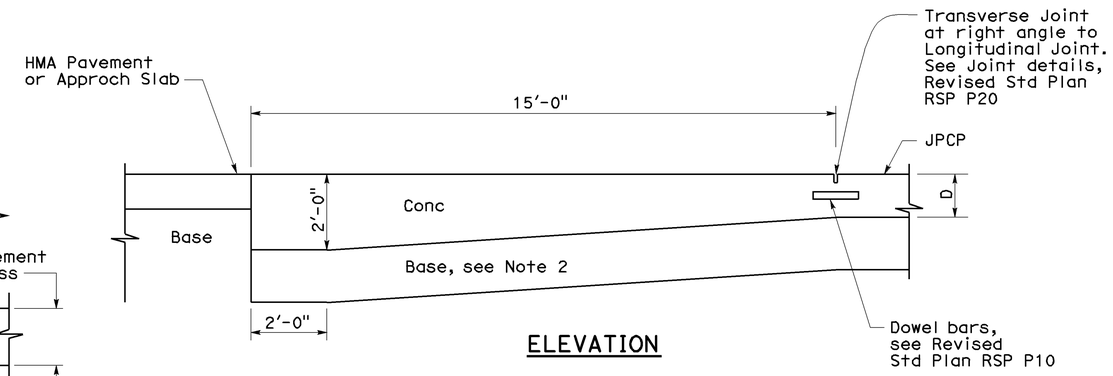

ELEVATION

PAVEMENT END ANCHOR

For HMA Pvmt or Structure Approach Slab

NOTES:

1. Heavy broom finish.
2. Maintain same base thickness as JPCP.

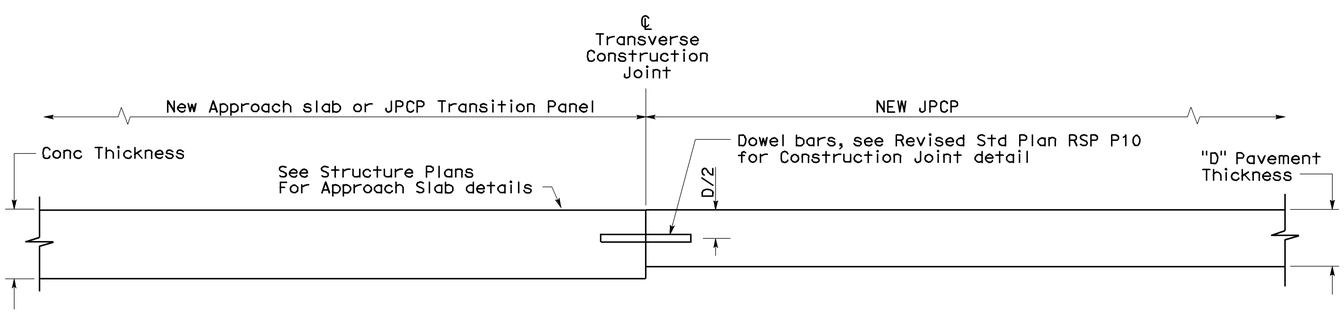

ELEVATION

TERMINAL JOINT TYPE 2

For JPCP Transition Panel or Structure Approach Slab

STATE OF CALIFORNIA
DEPARTMENT OF TRANSPORTATION

CONCRETE PAVEMENT-END PANEL PAVEMENT TRANSITIONS

NO SCALE

RSP P30 DATED APRIL 20, 2012 SUPERSEDES RSP P30 DATED MAY 15, 2009 AND STANDARD PLAN P30 DATED MAY 1, 2006 - PAGE 129 OF THE STANDARD PLANS BOOK DATED MAY 2006.

REVISED STANDARD PLAN RSP P30

2006 REVISED STANDARD PLAN RSP P30

2-22-12