Dist	COUNTY	ROUTE	POST MILES TOTAL PROJECT	SHEET No.	TOTAL SHEETS
08	SBd	40	R28.1/R51.0	1	49

STATE OF CALIFORNIA

DEPARTMENT OF TRANSPORTATION

ACIM-040-1(078)27E

PROJECT PLANS FOR CONSTRUCTION ON

STATE HIGHWAY

IN SAN BERNARDINO COUNTY

FROM 0.2 MILE WEST OF DESERT OASIS ROADSIDE REST AREA TO 1.0 MILE EAST OF CRUCERO ROAD

INDEX OF PLANS

SHEET No.	DESCRIPTION
1	TITLE AND LOCATION MAP
2-4	TYPICAL CROSS SECTIONS
5-13	CONSTRUCTION DETAILS
14	CONSTRUCTION AREA SIGN
15	PAVEMENT DELINEATION PLAN
16-17	PAVEMENT DELINEATION DETAILS
18-21	PAVEMENT DELINEATION QUANTITIES
22-25	SUMMARY OF QUANTITIES
26-49	REVISED STANDARD PLANS

THE STANDARD PLANS LIST APPLICABLE TO THIS CONTRACT IS INCLUDED IN THE NOTICE TO CONTRACTORS AND SPECIAL PROVISIONS BOOK.

TO BE SUPPLEMENTED BY STANDARD PLANS DATED MAY 2006

LOCATION MAP

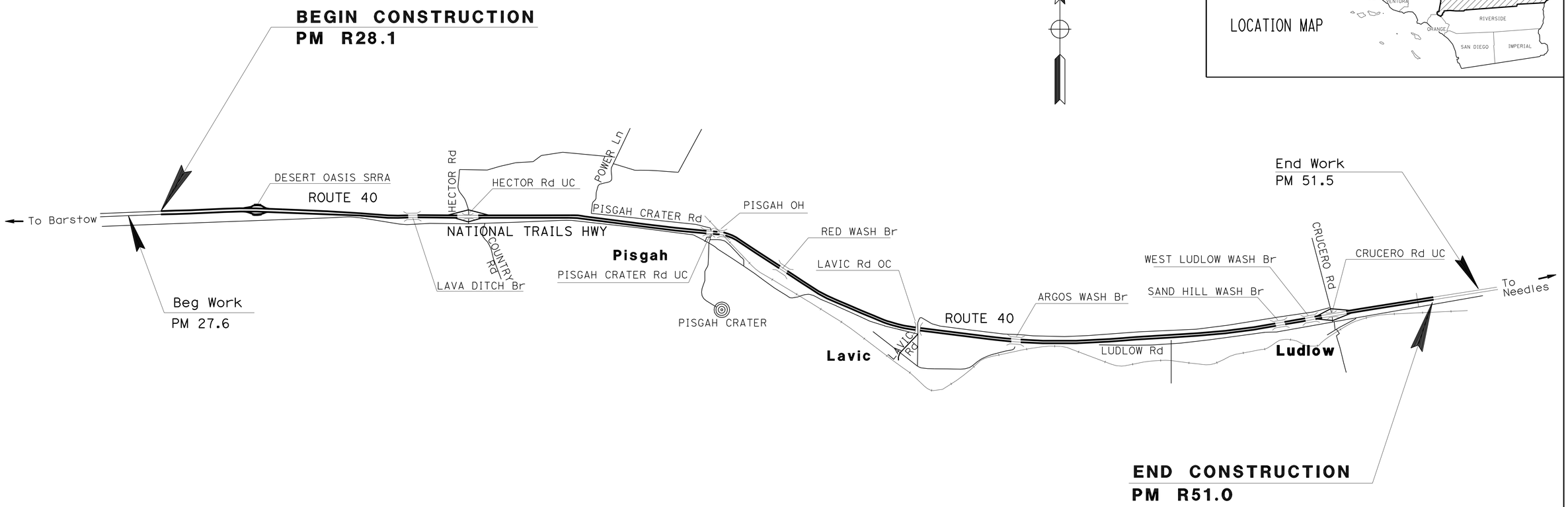

NO SCALE

PROJECT MANAGER: MOHAMMAD MOLLAZADEH

DESIGN ENGINEER: HAO VAN HO

PROJECT ENGINEER REGISTERED CIVIL ENGINEER — DATE 11-07-11

November 07, 2011
PLANS APPROVAL DATE

REGISTERED PROFESSIONAL ENGINEER — MICHAEL PATRICK RISTIC — No. 69429 — Exp. 6/30/12 — CIVIL — STATE OF CALIFORNIA

THE STATE OF CALIFORNIA OR ITS OFFICERS OR AGENTS SHALL NOT BE RESPONSIBLE FOR THE ACCURACY OR COMPLETENESS OF SCANNED COPIES OF THIS PLAN SHEET.

THE CONTRACTOR SHALL POSSESS THE CLASS (OR CLASSES) OF LICENSE AS SPECIFIED IN THE "NOTICE TO BIDDERS."

CONTRACT No.	08-0K2404
PROJECT ID	0800020316

LAST REVISION 11-07-11 — DATE PLOTTED => 08-NOV-2011 — TIME PLOTTED => 10:50

Dist	COUNTY	ROUTE	POST MILES TOTAL PROJECT	SHEET No.	TOTAL SHEETS
08	SBd	40	R28.1/R51.0	2	49

REGISTERED CIVIL ENGINEER 11-07-11 DATE

11-07-11
PLANS APPROVAL DATE

REGISTERED PROFESSIONAL ENGINEER HAO V. HO No. C64720 Exp. 6-30-13 CIVIL STATE OF CALIFORNIA

THE STATE OF CALIFORNIA OR ITS OFFICERS OR AGENTS SHALL NOT BE RESPONSIBLE FOR THE ACCURACY OR COMPLETENESS OF SCANNED COPIES OF THIS PLAN SHEET.

NOTES:

1. DIMENSIONS OF STRUCTURAL SECTIONS ARE SUBJECT TO TOLERANCES SPECIFIED IN THE STANDARD SPECIFICATIONS.
2. SUPERELEVATION AS SHOWN OR AS DIRECTED BY THE ENGINEER.
3. NO SURFACING, COLD PLANING, OR FOG SEAL SHALL BE ALLOWED ON APPROACH SALBS AND ON BRIDGE STRUCTURES.
4. EXISTING UTILITY FACILITIES HAVE NOT BEEN PLOTTED ON THESE PLANS EXCEPT AS SHOWN ON SHEET C-9.
5. EXISTING STRUCTURAL SECTIONS NOT SHOWN.
6. SEE SHEET C-6 FOR PAVEMENT CONFORM DETAILS.
7. SEE SHEET Q-1 AND Q-2 FOR LOCATIONS, TYPES AND QUANTITIES OF SALVAGE AND CONSTRUCTION OF MBGR, TERMINAL SYSTEMS, END CAPS, CRASH CUSHIONS AND TRANSITION RAILING.
8. SEE QUANTITY SHEET Q-3 AND Q-4 FOR LOCATIONS, TYPES AND QUANTITIES OF REMOVAL AND CONSTRUCTION OF AC DIKES, COLD PLANE AND PAVEMENTS.

LEGEND:

1	0.40′ COLD PLANE 0.40′ HMA (TYPE C)
2	0.25′ COLD PLANE 0.25′ HMA (TYPE C)
3	0.05′ COLD PLANE 0.15′ RHMA-G
4	0.90′ JPCP (RAMP TERMINI-RSC) 0.60′ CL2 AB
5	0.10′ RHMA-G
6	0.15′ COLD PLANE 0.15′ RHMA-G

ABBREVIATION:

RHMA-G	RUBBERIZED HOT MIX ASPHALT (GAP GRADED)
RSC	RAPID STRENGTH CONCRETE
SRRA	SAFETY ROADSIDE REST AREA

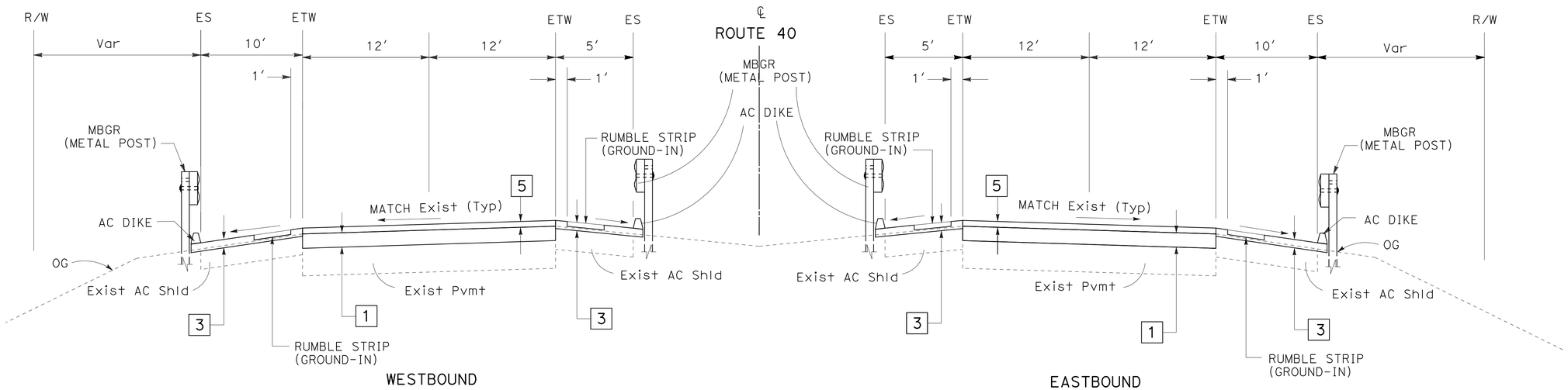

WESTBOUND
PM R28.1 TO PM R32.0

ROUTE 40

EASTBOUND
PM R28.1 TO PM R32.0

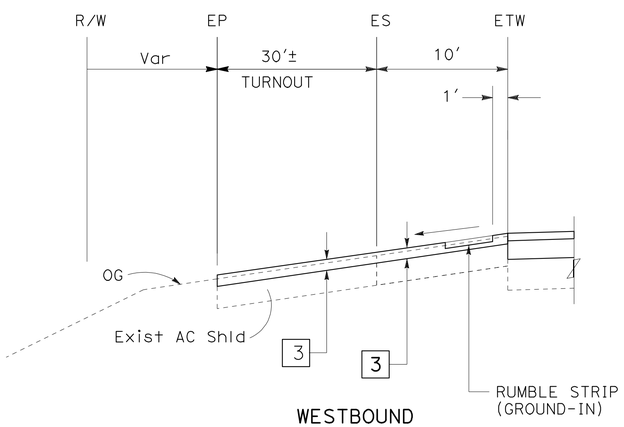

WESTBOUND
TURNOUT AT PM 29.5

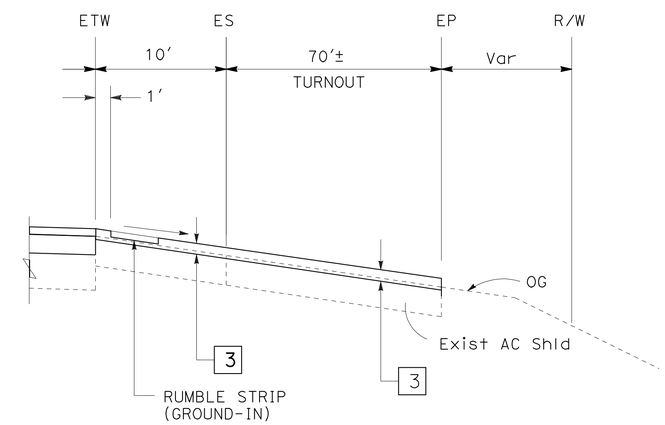

EASTBOUND
TURNOUT AT PM 30.2

TYPICAL CROSS SECTIONS

NO SCALE

X-1

STATE OF CALIFORNIA - DEPARTMENT OF TRANSPORTATION
Caltrans MAINTENANCE ENGINEERING

FUNCTIONAL SUPERVISOR: MICHAEL RISTIC
CALCULATED-DESIGNED BY: YONGBEE LIAU
CHECKED BY: HAO V. HO
REVISED BY
DATE REVISED

LAST REVISION 11-07-11
DATE PLOTTED => 08-NOV-2011
TIME PLOTTED => 10:50

Dist	COUNTY	ROUTE	POST MILES TOTAL PROJECT	SHEET No.	TOTAL SHEETS
08	SBd	40	R28.1/R51.0	3	49

REGISTERED CIVIL ENGINEER 11-07-11 DATE

11-07-11
PLANS APPROVAL DATE

REGISTERED PROFESSIONAL ENGINEER
HAO V. HO
No. C64720
Exp. 6-30-11
CIVIL
STATE OF CALIFORNIA

THE STATE OF CALIFORNIA OR ITS OFFICERS OR AGENTS SHALL NOT BE RESPONSIBLE FOR THE ACCURACY OR COMPLETENESS OF SCANNED COPIES OF THIS PLAN SHEET.

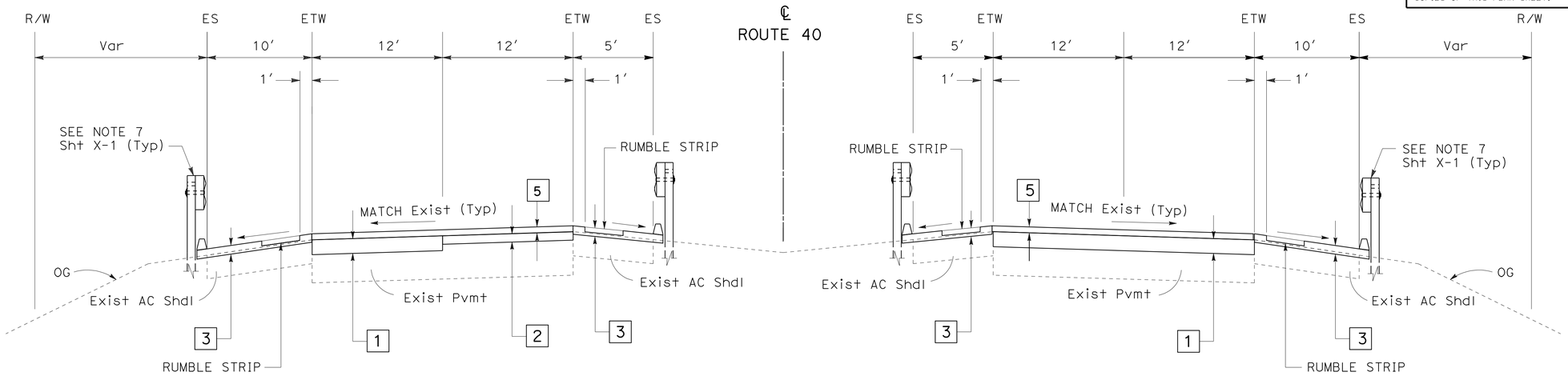

WESTBOUND

PM R36.0 TO PM R38.0
PM R40.0 TO PM R42.0

ROUTE 40

EASTBOUND

PM R36.0 TO PM R38.0

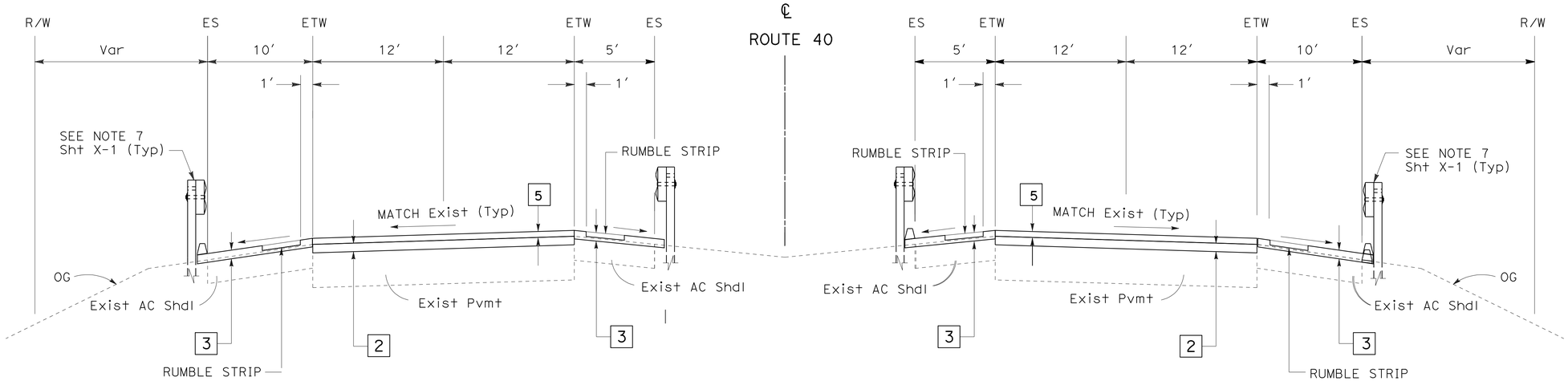

WESTBOUND

PM R32.0 TO PM R36.0
PM R38.0 TO PM R40.0
PM R42.0 TO PM R51.0

ROUTE 40

EASTBOUND

PM R32.0 TO PM R36.0
PM R38.0 TO PM R51.0

TYPICAL CROSS SECTIONS

NO SCALE

X-2

STATE OF CALIFORNIA - DEPARTMENT OF TRANSPORTATION
Caltrans® MAINTENANCE ENGINEERING

FUNCTIONAL SUPERVISOR: MICHAEL RISTIC
CALCULATED-DESIGNED BY: YONGBEE LIAU
CHECKED BY: HAO V. HO
REVISED BY
DATE REVISED

LAST REVISION 11-07-11
DATE PLOTTED => 08-NOV-2011
TIME PLOTTED => 10:50

Dist	COUNTY	ROUTE	POST MILES TOTAL PROJECT	SHEET No.	TOTAL SHEETS
08	SBd	40	R28.1/R51.0	4	49

REGISTERED CIVIL ENGINEER 11-07-11 DATE

11-07-11
PLANS APPROVAL DATE

REGISTERED PROFESSIONAL ENGINEER HAO V. HO No. C64720 Exp. 6-30-13 CIVIL STATE OF CALIFORNIA

THE STATE OF CALIFORNIA OR ITS OFFICERS OR AGENTS SHALL NOT BE RESPONSIBLE FOR THE ACCURACY OR COMPLETENESS OF SCANNED COPIES OF THIS PLAN SHEET.

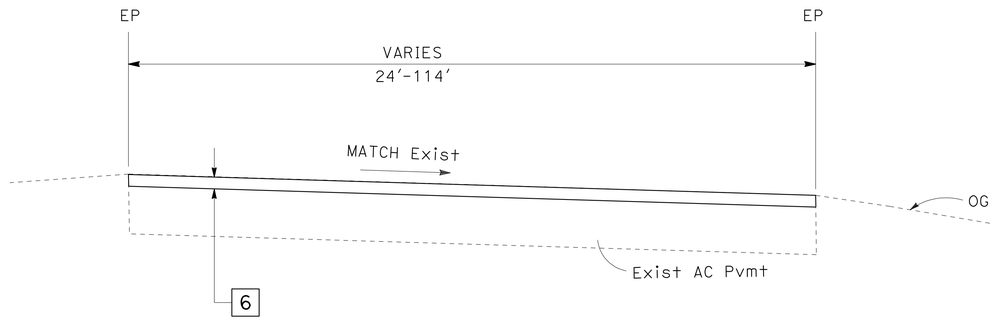

DESERT OASIS SRRA PARKING AREAS

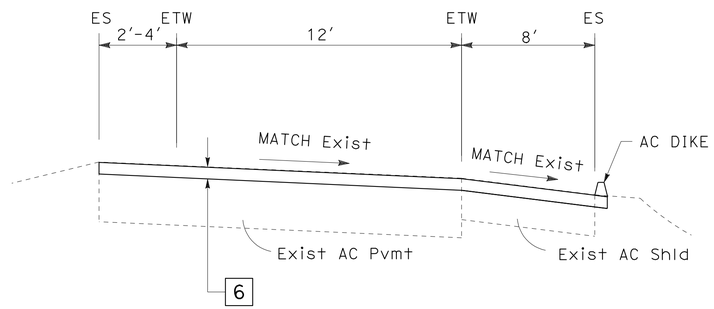

ROUTE 40 EB ENTRANCE RAMP/EXIT RAMP

HECTOR ROAD
CRUCEDO ROAD
DESERT OASIS SRRA

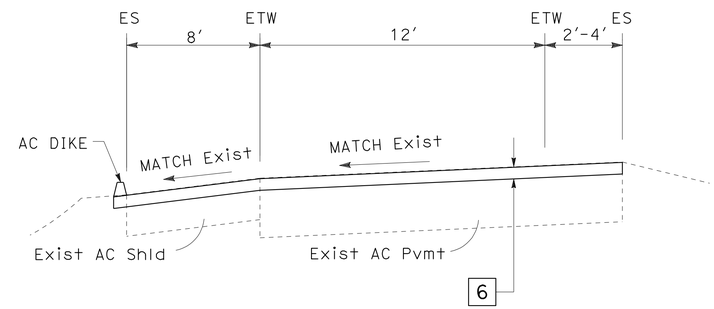

ROUTE 40 WB ENTRANCE RAMP/EXIT RAMP

HECTOR ROAD
CRUCEDO ROAD
DESERT OASIS SRRA

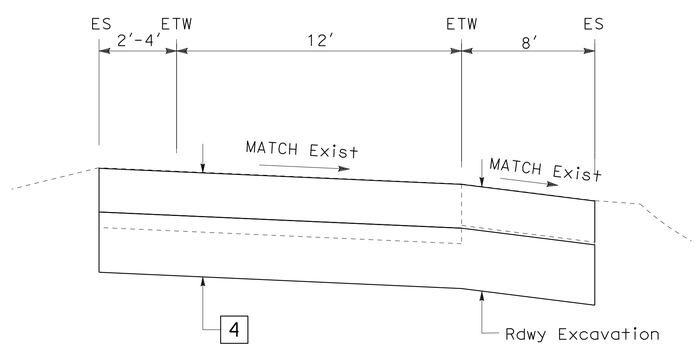

ROUTE 40 EB EXIT RAMP

RAMP TERMINUS
AT CRUCERO ROAD AND HECTOR Rd

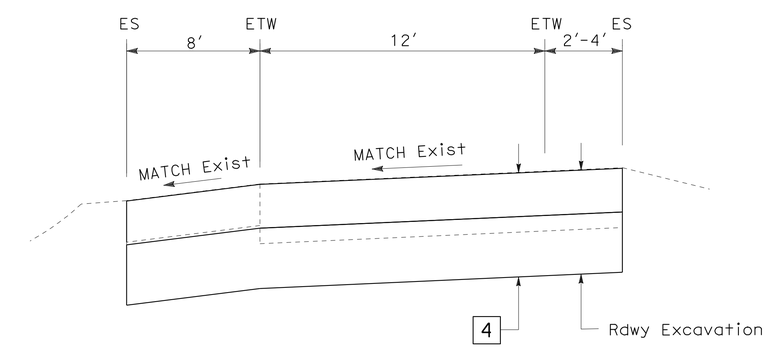

ROUTE 40 WB EXIT RAMP

RAMP TERMINUS
AT CRUCERO ROAD AND HECTOR Rd

TYPICAL CROSS SECTIONS

NO SCALE

X-3

STATE OF CALIFORNIA - DEPARTMENT OF TRANSPORTATION
Caltrans® MAINTENACE ENGINEERING

FUNCTIONAL SUPERVISOR: MICHAEL RISTIC
CALCULATED-DESIGNED BY: YONGBEE LIAU
CHECKED BY: HAO V. HO
REVISED BY
DATE REVISED

LAST REVISION 11-07-11 | DATE PLOTTED => 08-NOV-2011 | TIME PLOTTED => 10:50

Dist	COUNTY	ROUTE	POST MILES TOTAL PROJECT	SHEET No.	TOTAL SHEETS
08	SBd	40	R28.1/R51.0	5	49

REGISTERED CIVIL ENGINEER DATE

11-07-11
PLANS APPROVAL DATE

REGISTERED PROFESSIONAL ENGINEER
YONGBEE LIAU
No. C75571
Exp. 6-30-12
CIVIL
STATE OF CALIFORNIA

THE STATE OF CALIFORNIA OR ITS OFFICERS OR AGENTS SHALL NOT BE RESPONSIBLE FOR THE ACCURACY OR COMPLETENESS OF SCANNED COPIES OF THIS PLAN SHEET.

NOTES:

1. SEE SHEETS Q-1 AND Q-2 FOR LOCATIONS, TYPES, AND QUANTITIES.
2. SEE STANDARD PLANS FOR DETAILS NOT SHOWN.
3. SEE SHEETS C-2 TO C-4 FOR THRIE BEAM CONNECTION DETAILS.

LEGEND:

⇨ DIRECTION OF TRAFFIC

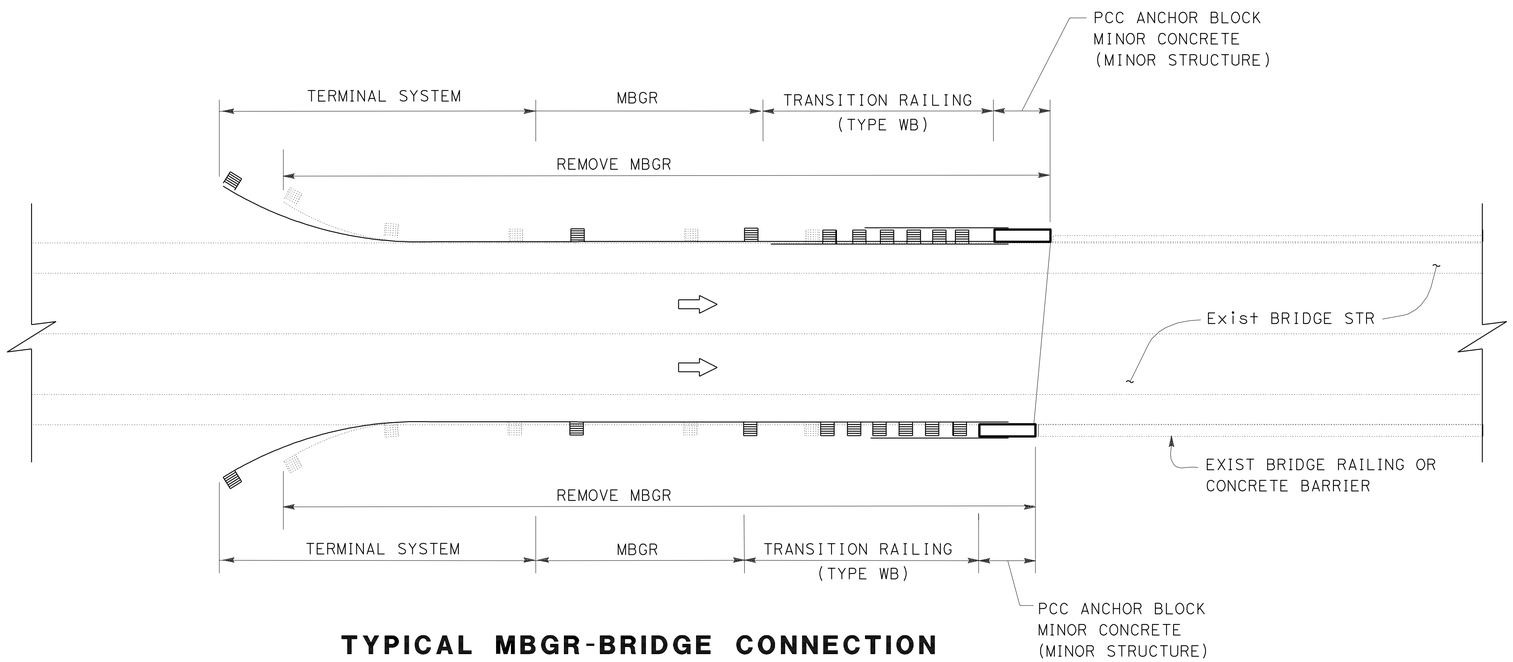

TYPICAL MBGR-BRIDGE CONNECTION

CONSTRUCTION DETAILS

NO SCALE

C-1

REVISED BY | DATE REVISED
YONGBEE LIAU | HAO V. HO
CALCULATED-DESIGNED BY | CHECKED BY
FUNCTIONAL SUPERVISOR
MICHAEL RISTIC

STATE OF CALIFORNIA - DEPARTMENT OF TRANSPORTATION
Caltrans® MAINTENACE ENGINEERING

LAST REVISION 11-07-11 | DATE PLOTTED => 08-NOV-2011 | TIME PLOTTED => 10:50

Dist	COUNTY	ROUTE	POST MILES TOTAL PROJECT	SHEET No.	TOTAL SHEETS
08	SBd	40	R28.1/R51.0	6	49

REGISTERED CIVIL ENGINEER 11-07-11 DATE

11-07-11
PLANS APPROVAL DATE

REGISTERED PROFESSIONAL ENGINEER YONGBEE LIAU No. C75571 Exp. 6-30-12 CIVIL STATE OF CALIFORNIA

THE STATE OF CALIFORNIA OR ITS OFFICERS OR AGENTS SHALL NOT BE RESPONSIBLE FOR THE ACCURACY OR COMPLETENESS OF SCANNED COPIES OF THIS PLAN SHEET.

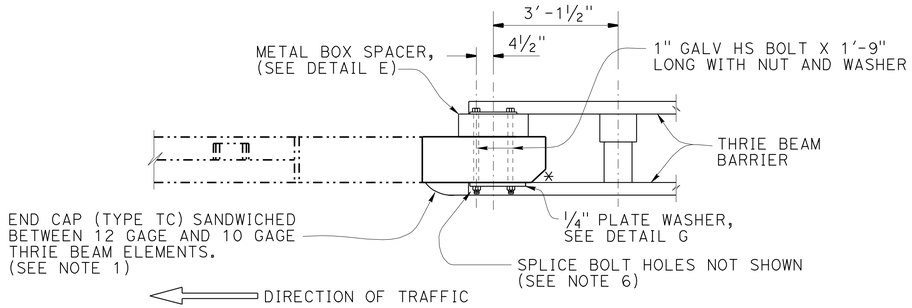

PLAN

* 5" X 5" CHAMFER

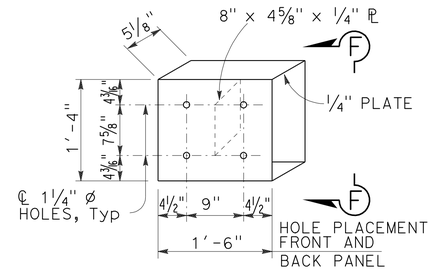

DETAIL E

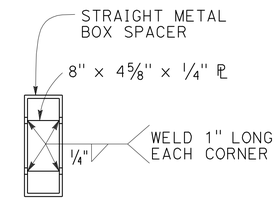

VIEW F-F

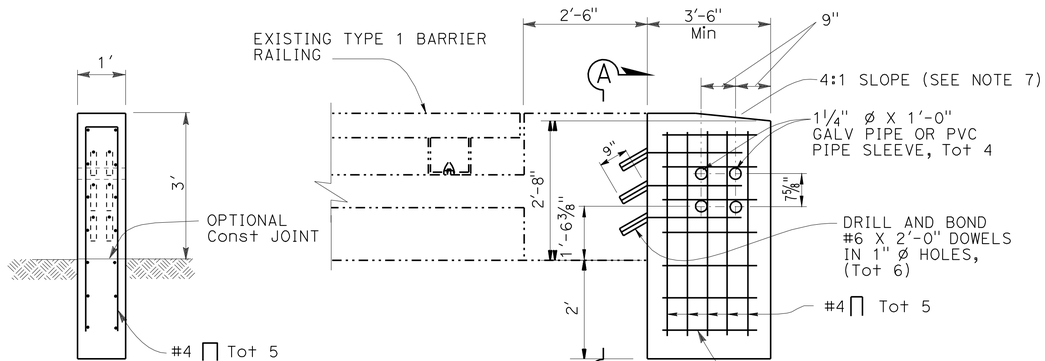

SECTION A-A

ELEVATION

TYPE I

TYPICAL SECTION
(TYPE 1 BARRIER)

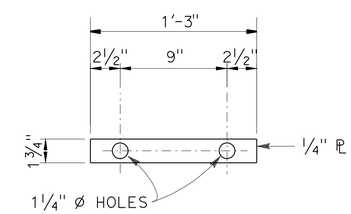

DETAIL G

THRIE BEAM CONNECTION DETAILS

BARRIER RAILING TYPE 1

NOTES:

1. FOR DETAILS NOT SHOWN, SEE STANDARD PLANS, JULY 2006.
2. DEPENDENT DIMENSIONS WILL BE VERIFIED IN THE FIELD BEFORE FABRICATING ANY END CONNECTION TO CONFORM WITH EXISTING PAVED CONDITIONS.
3. WHEN END SECTION IS CALLED FOR, MODIFY TYPICAL TERMINAL SECTION TO FIT. SEE DETAIL E
4. ALL PLATES AND BOLTS ARE GALVANIZED.
5. CUT AND REMOVE PORTION OF TYPE 1, 2 AND BAGR AS REQUIRED.
6. EXTERIOR SPLICE BOLT HOLES SHALL BE THE STANDARD ⅞" X 1⅛"SLOT SIZE FOR RAIL SPLICES AT POST #T4 AND THE CONNECTION TO THE CONCRETE BARRIER OR RAILING. INTERIOR SPLICE BOLT HOLES MAY BE INCREASED UP TO 1¼" DIA. WASHERS SHALL BE USED WITH SPLICE BOLTS ON BACK SIDE OF RAIL ELEMENT AT POST #T4 AND CONNECTION TO THE CONCRETE BARRIER OR RAILING.
7. TAPER THE TOP OF THE END OF THE BRIDGE RAILING AT 4:1 TO MATCH THE TOP ELEVATION OF THE THRIE BEAM RAIL ELEMENT.

CONSTRUCTION DETAILS

NO SCALE

C-2

STATE OF CALIFORNIA - DEPARTMENT OF TRANSPORTATION
Caltrans MAINTENANCE ENGINEERING

FUNCTIONAL SUPERVISOR: MICHAEL RISTIC
CALCULATED-DESIGNED BY: YONGBEE LIAU
CHECKED BY: HAO V. HO
REVISED BY
DATE REVISED

LAST REVISION 11-07-11 | DATE PLOTTED => 08-NOV-2011 | TIME PLOTTED => 10:51

Dist	COUNTY	ROUTE	POST MILES TOTAL PROJECT	SHEET No.	TOTAL SHEETS
08	SBd	40	R28.1/R51.0	7	49

REGISTERED CIVIL ENGINEER 11-07-11 DATE

11-07-11
PLANS APPROVAL DATE

REGISTERED PROFESSIONAL ENGINEER YONGBEE LIAU No. C75571 Exp. 6-30-12 CIVIL STATE OF CALIFORNIA

THE STATE OF CALIFORNIA OR ITS OFFICERS OR AGENTS SHALL NOT BE RESPONSIBLE FOR THE ACCURACY OR COMPLETENESS OF SCANNED COPIES OF THIS PLAN SHEET.

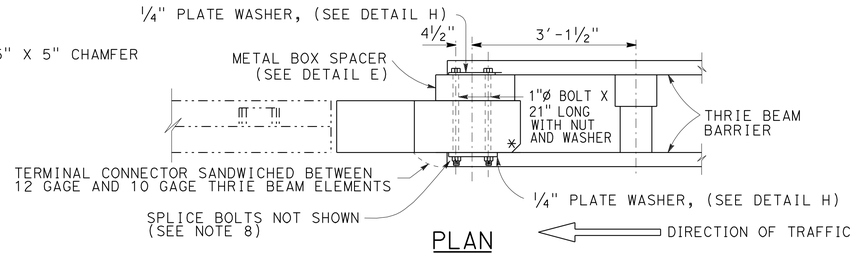

PLAN

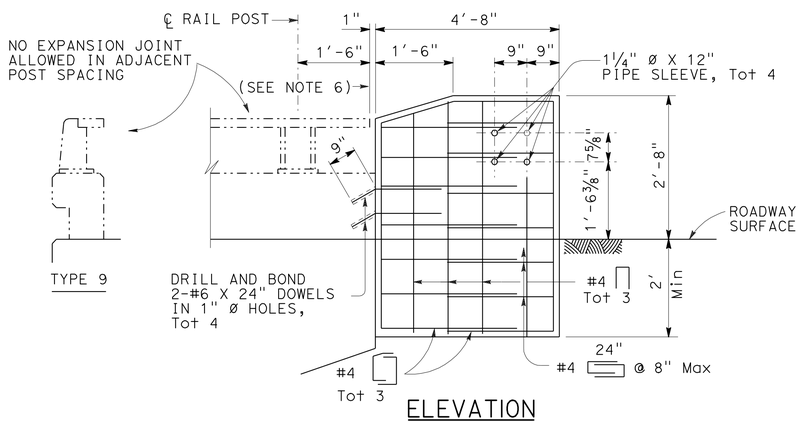

ELEVATION
EXISTING BARRIER RAILING TYPE 9
ALTERNATIVE 1

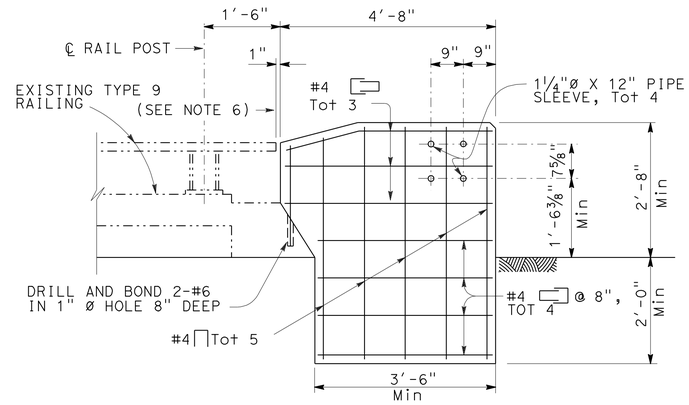

ELEVATION
EXISTING BARRIER RAILING TYPE 9
ALTERNATIVE 3

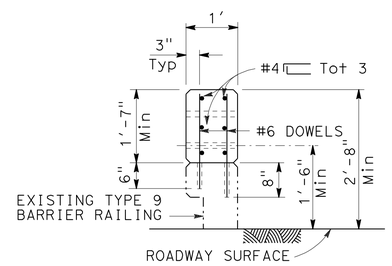

SECTION C-C

NOTES:

1. FOR DETAILS NOT SHOWN, SEE STANDARD PLANS.
2. DEPENDENT DIMENSIONS WILL BE VERIFIED IN THE FIELD BEFORE FABRICATING ANY END CONNECTION TO CONFORM WITH EXISTING PAVED CONDITIONS.
3. WHEN END SECTION IS CALLED FOR, MODIFY TYPICAL TERMINAL SECTION TO FIT. SEE DETAIL E SHEET 2.
4. FOR THRIE BEAM CONNECTION, SEE STANDARD PLANS "THRIE BEAM BARRIER CONNECTIONS TO BRIDGE RAILING".
5. ALL PLATES AND BOLTS ARE GALVANIZED.
6. CUT AND REMOVE THAT PORTION OF TYPE 9, 9-11 AND BAGR AS REQUIRED.
7. IF RAIL IS NOT CONTINUOUS OVER 2 POSTS, USE SPLICE AT EXPANSION JOINT.
8. EXTERIOR SPLICE BOLT HOLES SHALL BE THE STANDARD 7/8" X 1 1/8" SLOT SIZE FOR RAIL SPLICES AT POST # T4 AND THE CONNECTION TO THE CONCRETE BARRIER OR RAILING. INTERIOR SPLICE BOLT HOLES MAY BE INCREASED UP TO 1 1/8" DIA. WASHERS SHALL BE USED WITH SPLICE BOLTS ON BACK SIDE OF RAIL ELEMENT AT POST # T4 AND CONNECTION TO THE CONCRETE BARRIER OR RAILING.
9. TAPER THE TOP OF THE END OF THE BRIDGE RAILING AT 4:1 TO MATCH THE TOP ELEVATION OF THE THRIE BEAM RAIL ELEMENT.

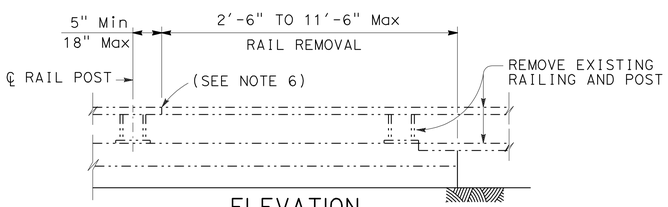

ELEVATION
RAIL REMOVAL

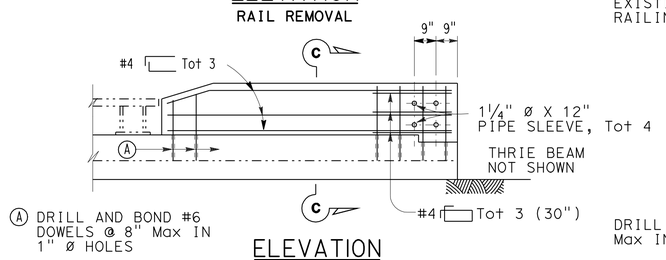

ELEVATION
New End Post
EXISTING BARRIER RAILING TYPE 9
ALTERNATIVE 2

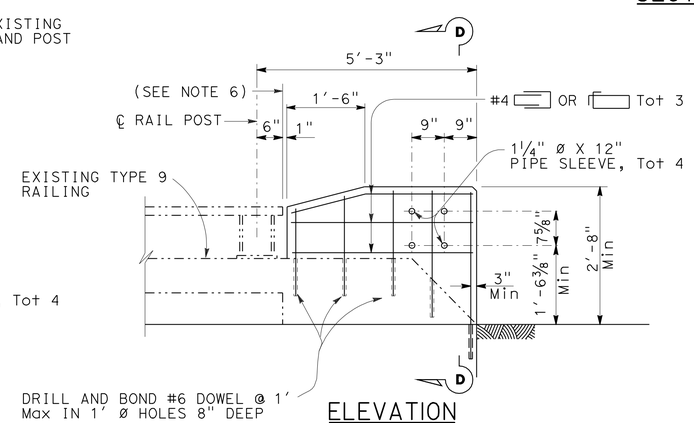

ELEVATION
EXISTING BARRIER RAILING TYPE 9
ALTERNATIVE 4

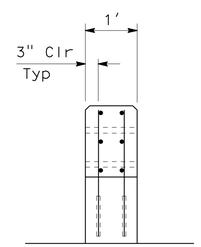

SECTION D-D

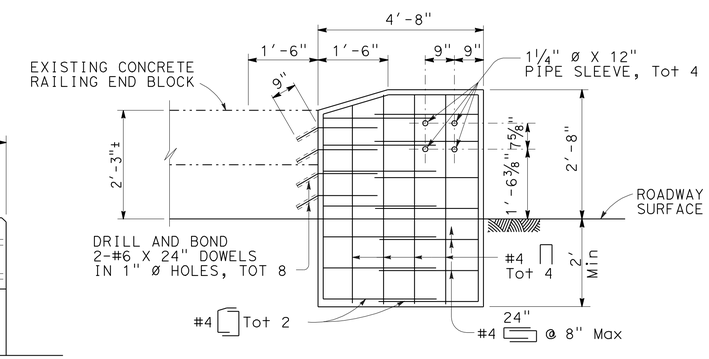

ELEVATION
EXISTING BARRIER RAILING TYPE 9
ALTERNATIVE 5

THRIE BEAM CONNECTION DETAILS

BARRIER RAILING TYPE 9

CONSTRUCTION DETAILS

NO SCALE

C-3

REVISED BY	DATE REVISED

CALCULATED-DESIGNED BY	CHECKED BY
YONGBEE LIAU	HAO V. HO

FUNCTIONAL SUPERVISOR: MICHAEL RISTIC

STATE OF CALIFORNIA - DEPARTMENT OF TRANSPORTATION
Caltrans MAINTENANCE ENGINEERING

LAST REVISION 11-07-11 | DATE PLOTTED => 08-NOV-2011 | TIME PLOTTED => 10:51

Dist	COUNTY	ROUTE	POST MILES TOTAL PROJECT	SHEET No.	TOTAL SHEETS
08	SBd	40	R28.1/R51.0	8	49

REGISTERED CIVIL ENGINEER 11-07-11 DATE

11-07-11
PLANS APPROVAL DATE

REGISTERED PROFESSIONAL ENGINEER
YONGBEE LIAU
No. C75571
Exp. 6-30-12
CIVIL
STATE OF CALIFORNIA

THE STATE OF CALIFORNIA OR ITS OFFICERS OR AGENTS SHALL NOT BE RESPONSIBLE FOR THE ACCURACY OR COMPLETENESS OF SCANNED COPIES OF THIS PLAN SHEET.

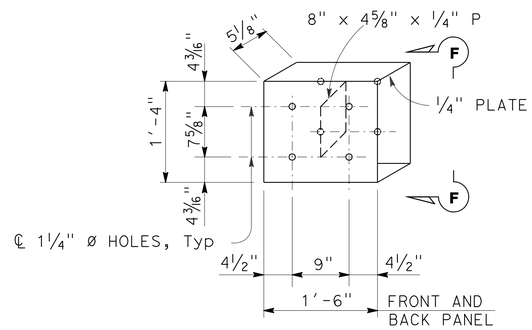

DETAIL E

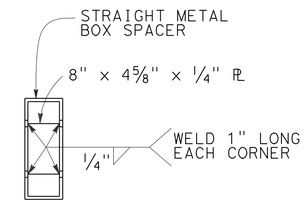

VIEW F-F

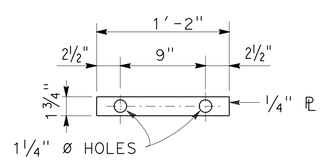

DETAIL H

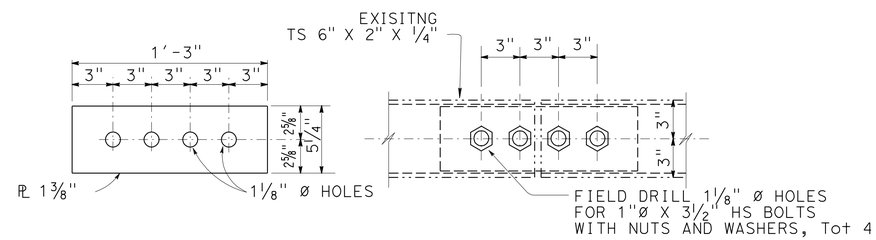

SPLICE PLATE MODIFIED TUBE

RAIL SPLICE DETAIL

SEE NOTE 7

THRIE BEAM CONNECTION DETAILS
BARRIER RAILING TYPE 9

CONSTRUCTION DETAILS

NO SCALE **C-4**

REVISED BY	DATE REVISED

CALCULATED-DESIGNED BY	YONGBEE LIAU
CHECKED BY	HAO V. HO
FUNCTIONAL SUPERVISOR	MICHAEL RISTIC

STATE OF CALIFORNIA - DEPARTMENT OF TRANSPORTATION
Caltrans® MAINTENACE ENGINEERING

LAST REVISION 11-07-11 | DATE PLOTTED => 08-NOV-2011 | TIME PLOTTED => 10:51

Dist	COUNTY	ROUTE	POST MILES TOTAL PROJECT	SHEET No.	TOTAL SHEETS
08	SBd	40	R28.1/R51.0	9	49

REGISTERED CIVIL ENGINEER 11-07-11 DATE

11-07-11
PLANS APPROVAL DATE

REGISTERED PROFESSIONAL ENGINEER YONGBEE LIAU No. C75571 Exp. 6-30-12 CIVIL STATE OF CALIFORNIA

THE STATE OF CALIFORNIA OR ITS OFFICERS OR AGENTS SHALL NOT BE RESPONSIBLE FOR THE ACCURACY OR COMPLETENESS OF SCANNED COPIES OF THIS PLAN SHEET.

NOTES:

1. PLACE GROUND-IN INDENTATIONS RUMBLE STRIP PER STANDARD PLAN A40B.
2. LIMITS OF THE RUMBLE STRIPS AS SHOWN OR AS DIRECTED BY THE ENGINEER.

LEGEND:

RUMBLE STRIP

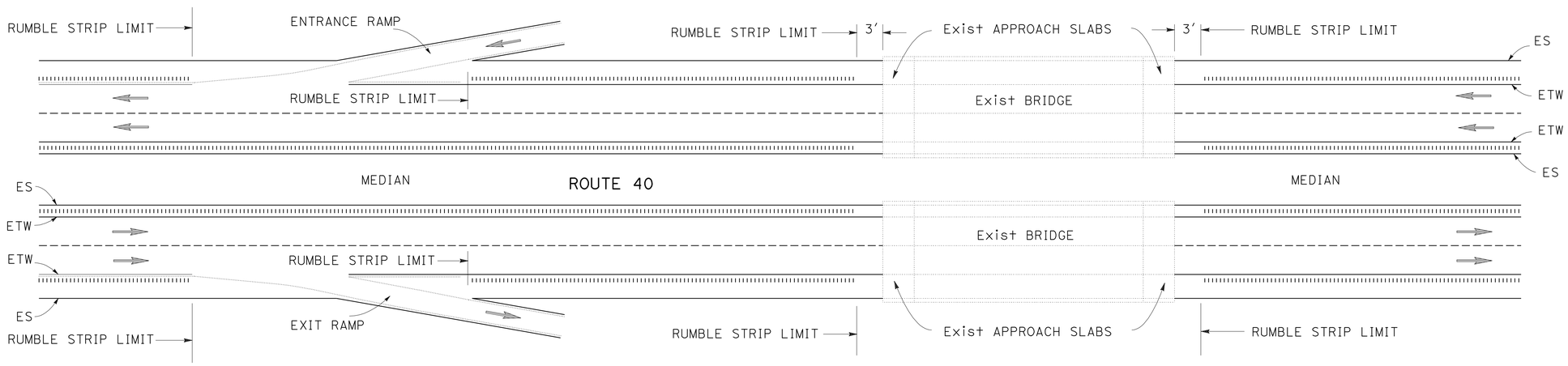

RUMBLE STRIP PLACEMENT
(AT RAMPS AND BRIDGES)

THIS SHEET IS ACCURATE FOR RUMBLE STRIP PLACEMENT WORK ONLY.

CONSTRUCTION DETAILS

NO SCALE

C-5

STATE OF CALIFORNIA - DEPARTMENT OF TRANSPORTATION
Caltrans® MAINTENANCE ENGINEERING

FUNCTIONAL SUPERVISOR: MICHAEL RISTIC
CALCULATED-DESIGNED BY: YONGBEE LIAU
CHECKED BY: HAO V. HO
REVISED BY
DATE REVISED

LAST REVISION 11-07-11 DATE PLOTTED => 08-NOV-2011 TIME PLOTTED => 10:51

Dist	COUNTY	ROUTE	POST MILES TOTAL PROJECT	SHEET No.	TOTAL SHEETS
08	SBd	40	R28.1/R51.0	10	49

REGISTERED CIVIL ENGINEER 11-07-11 DATE

11-07-11
PLANS APPROVAL DATE

REGISTERED PROFESSIONAL ENGINEER YONGBEE LIAU No. C75571 Exp. 6-30-12 CIVIL STATE OF CALIFORNIA

THE STATE OF CALIFORNIA OR ITS OFFICERS OR AGENTS SHALL NOT BE RESPONSIBLE FOR THE ACCURACY OR COMPLETENESS OF SCANNED COPIES OF THIS PLAN SHEET.

LEGEND:

RHMA-G RUBBERIZED HOT MIX ASPHALT (GAP GRADED)
WIM WEIGH IN MOTION STATION
0.10' RHMA-G

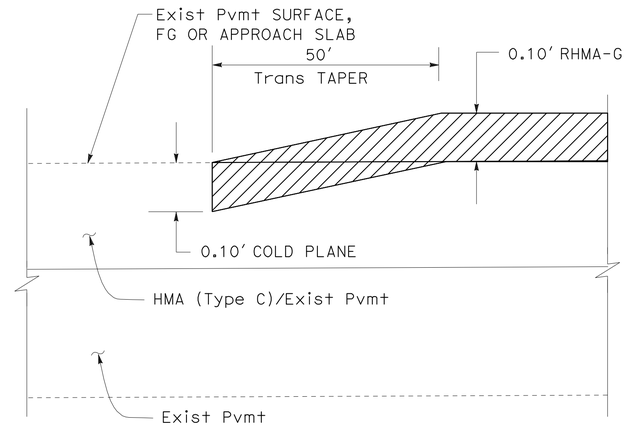

DETAIL "A"
PAVEMENT CONFORM

ENTRANCE / EXIT RAMP TO AND FROM MAINLINE
BEGIN / END BRIDGE
BEGIN / END CONSTRUCTION

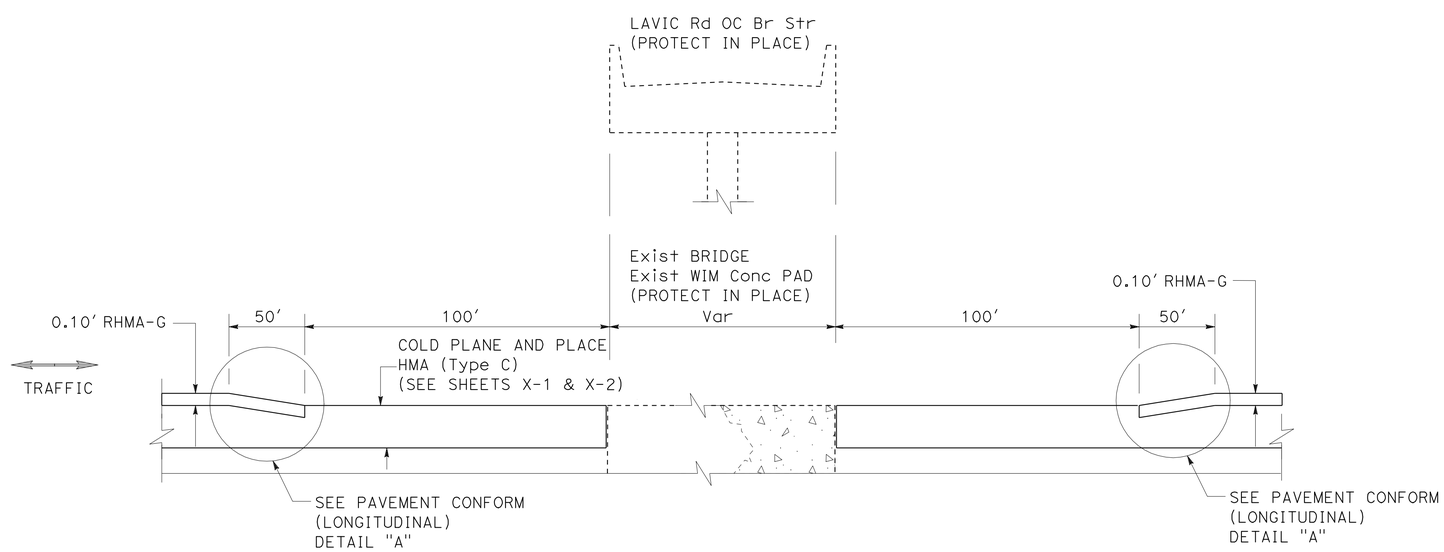

TAPER CONFORM TO EXISTING PAVEMENT

(EXISTING WEIGH IN MOTION STATION AT Approx PM 28.2 ROUTE 40 EB & WB)

CONSTRUCTION DETAILS

NO SCALE

C-6

STATE OF CALIFORNIA - DEPARTMENT OF TRANSPORTATION
Caltrans® MAINTENANCE ENGINEERING

FUNCTIONAL SUPERVISOR: MICHAEL RISTIC
CALCULATED-DESIGNED BY: YONGBEE LIAU
CHECKED BY: HAO V. HO
REVISED BY
DATE REVISED

LAST REVISION 11-07-11
DATE PLOTTED => 08-NOV-2011
TIME PLOTTED => 10:51

Dist	COUNTY	ROUTE	POST MILES TOTAL PROJECT	SHEET No.	TOTAL SHEETS
08	SBd	40	R28.1/R51.0	11	49

REGISTERED CIVIL ENGINEER 11-07-11 DATE

11-07-11
PLANS APPROVAL DATE

REGISTERED PROFESSIONAL ENGINEER YONGBEE LIAU No. C75571 Exp. 6-30-12 CIVIL STATE OF CALIFORNIA

THE STATE OF CALIFORNIA OR ITS OFFICERS OR AGENTS SHALL NOT BE RESPONSIBLE FOR THE ACCURACY OR COMPLETENESS OF SCANNED COPIES OF THIS PLAN SHEET.

LEGEND:

3 SEE NOTE 2

NOTES:

1. SEE SHEET PD-1 FOR PARKING STALL STRIPING DETAILS.
2. SEE SHEETS X-1 AND X-3 FOR TYPICAL CROSS SECTIONS.
3. INSTALL CURB RAMP DETECTABLE WARNING SURFACE PER STD PLAN A88A (ON EXISTING CURB RAMP).
4. SEE SHEET C-9 FOR EXISTING UTILITIES.

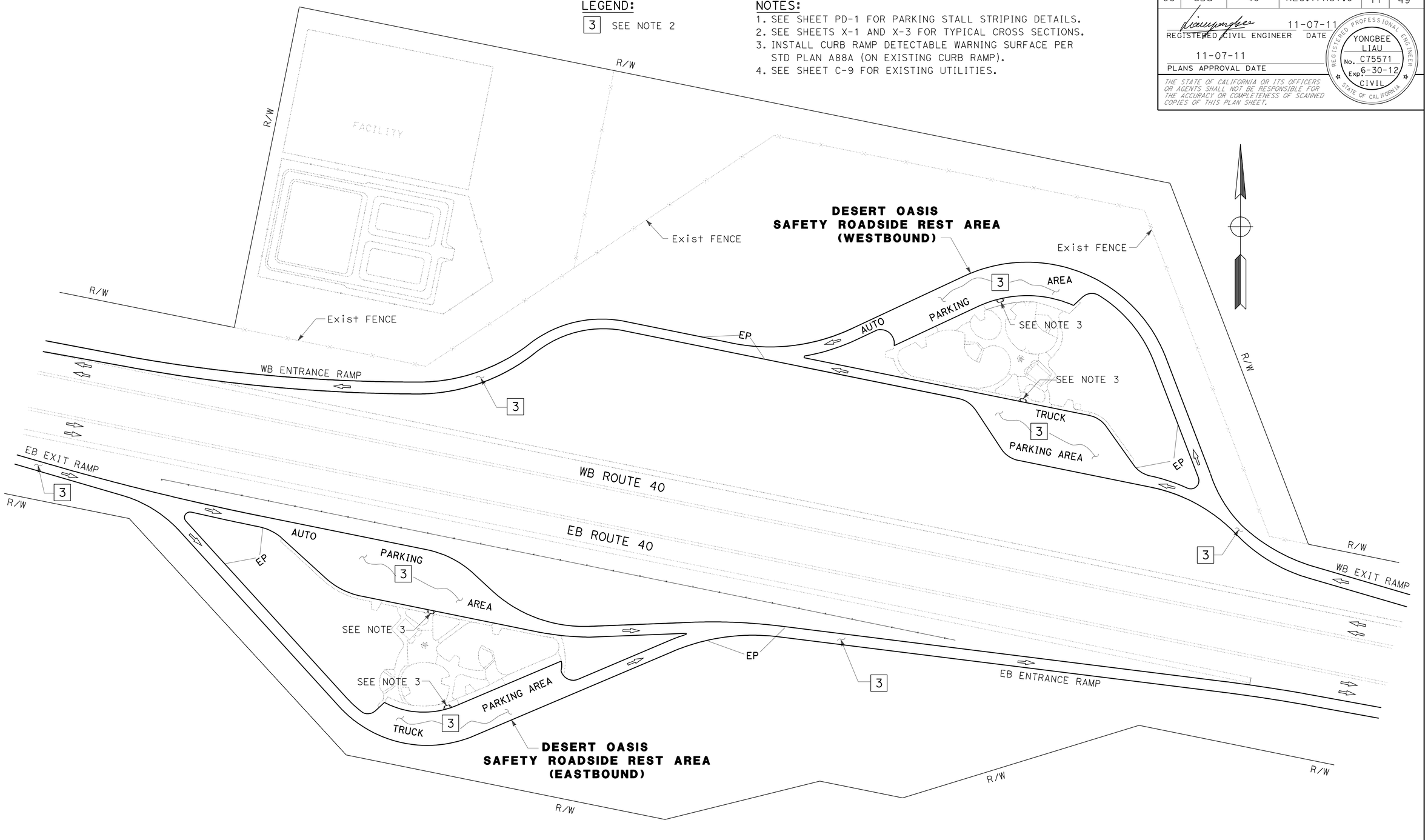

REST AREA PAVING DEATILS

CONSTRUCTION DETAILS

NO SCALE

C-7

STATE OF CALIFORNIA - DEPARTMENT OF TRANSPORTATION
Caltrans MAINTENACE ENGINEERING

FUNCTIONAL SUPERVISOR: MICHAEL RISTIC
CALCULATED-DESIGNED BY: YONGBEE LIAU
CHECKED BY: HAO V. HO
REVISED BY
DATE REVISED

LAST REVISION 11-07-11
DATE PLOTTED => 08-NOV-2011
TIME PLOTTED => 10:51

Dist	COUNTY	ROUTE	POST MILES TOTAL PROJECT	SHEET No.	TOTAL SHEETS
08	SBd	40	R28.1/R51.0	12	49

REGISTERED CIVIL ENGINEER 11-07-11 DATE

11-07-11
PLANS APPROVAL DATE

REGISTERED PROFESSIONAL ENGINEER
YONGBEE LIAU
No. C75571
Exp. 6-30-12
CIVIL
STATE OF CALIFORNIA

THE STATE OF CALIFORNIA OR ITS OFFICERS OR AGENTS SHALL NOT BE RESPONSIBLE FOR THE ACCURACY OR COMPLETENESS OF SCANNED COPIES OF THIS PLAN SHEET.

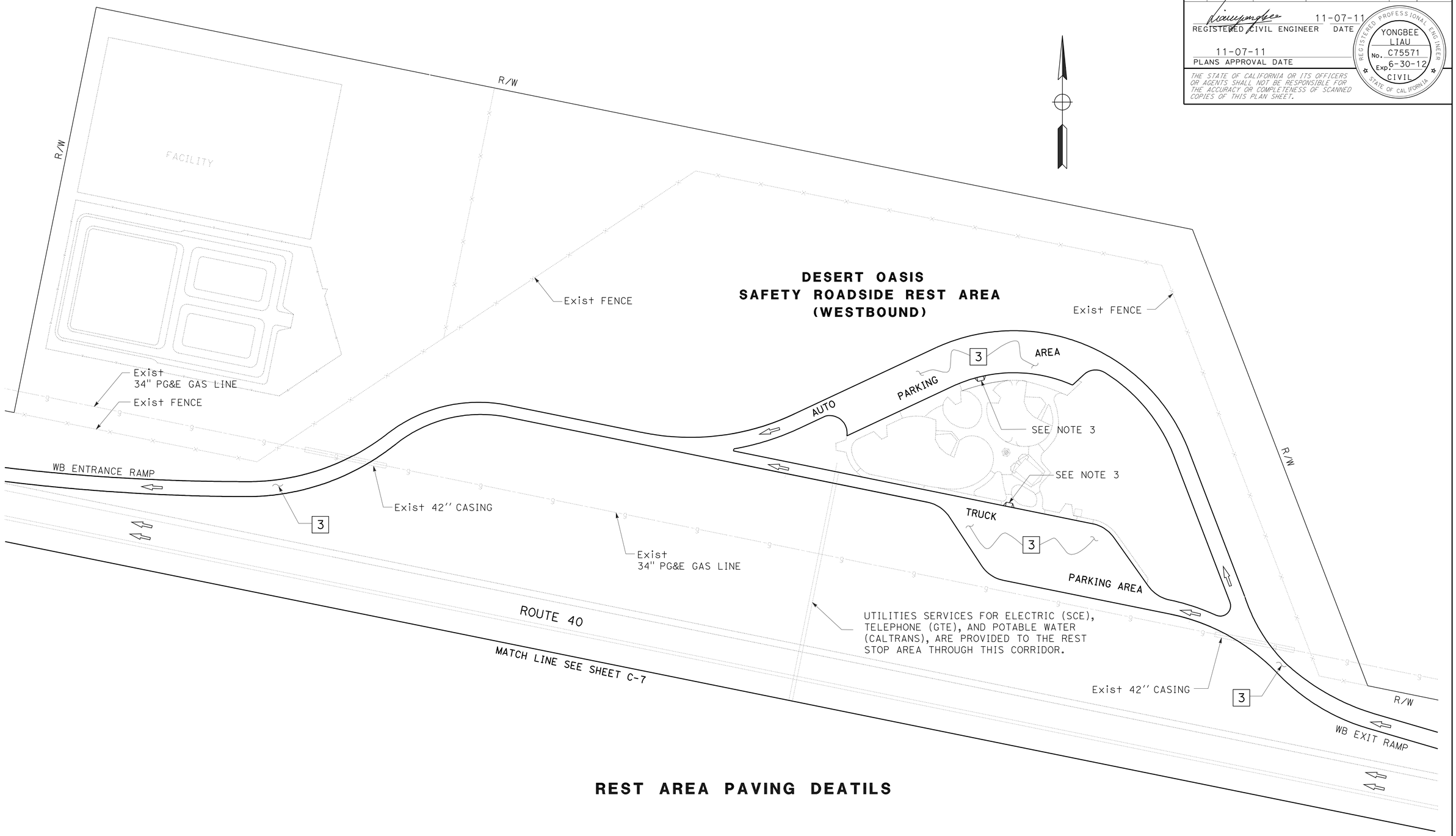

REST AREA PAVING DEATILS

CONSTRUCTION DETAILS

NO SCALE

C-8

STATE OF CALIFORNIA - DEPARTMENT OF TRANSPORTATION
Caltrans MAINTENANCE ENGINEERING

FUNCTIONAL SUPERVISOR: MICHAEL RISTIC
CALCULATED-DESIGNED BY: YONGBEE LIAU
CHECKED BY: HAO V. HO
REVISED BY
DATE REVISED

LAST REVISION 11-07-11
DATE PLOTTED => 08-NOV-2011
TIME PLOTTED => 10:52

Dist	COUNTY	ROUTE	POST MILES TOTAL PROJECT	SHEET No.	TOTAL SHEETS
08	SBd	40	R28.1/R51.0	13	49

REGISTERED CIVIL ENGINEER 11-07-11 DATE

11-07-11
PLANS APPROVAL DATE

REGISTERED PROFESSIONAL ENGINEER YONGBEE LIAU No. C75571 Exp. 6-30-12 CIVIL STATE OF CALIFORNIA

THE STATE OF CALIFORNIA OR ITS OFFICERS OR AGENTS SHALL NOT BE RESPONSIBLE FOR THE ACCURACY OR COMPLETENESS OF SCANNED COPIES OF THIS PLAN SHEET.

NOTES:

1. DOWELS AND TIE BARS SPACING PER STANDARD PLANS P10 AND P18.
2. LONGITUDINAL WEAKENED PLANE JOINTS SHALL EXTEND TO AND TERMINATE AT THE TRANSVERSE JOINT WHERE NO SLAB WIDTH LESS THAN 2′ OR GREATER THAN 15′ RESULTS.
3. MATCH AND JOIN EXISTING GRADE ALONG EXISTING LOCAL STREET.
4. FOR DETAILS NOT SHOWN, SEE STD. PLANS P10, P12, P17, P18, P20, AND P30.
5. SEE SHEETS C-1 AND C-3 FOR PAVEMENT TYPICAL CROSS SECTIONS.
6. CONTRACTOR TO VERIFY EXISTING UTILITIES IF ANY.

LEGEND:

⇨ DIRECTION OF TRAFFIC

[X] SEE NOTE 5

ABBREVIATION:

RSC RAPID STRENGTH CONCRETE

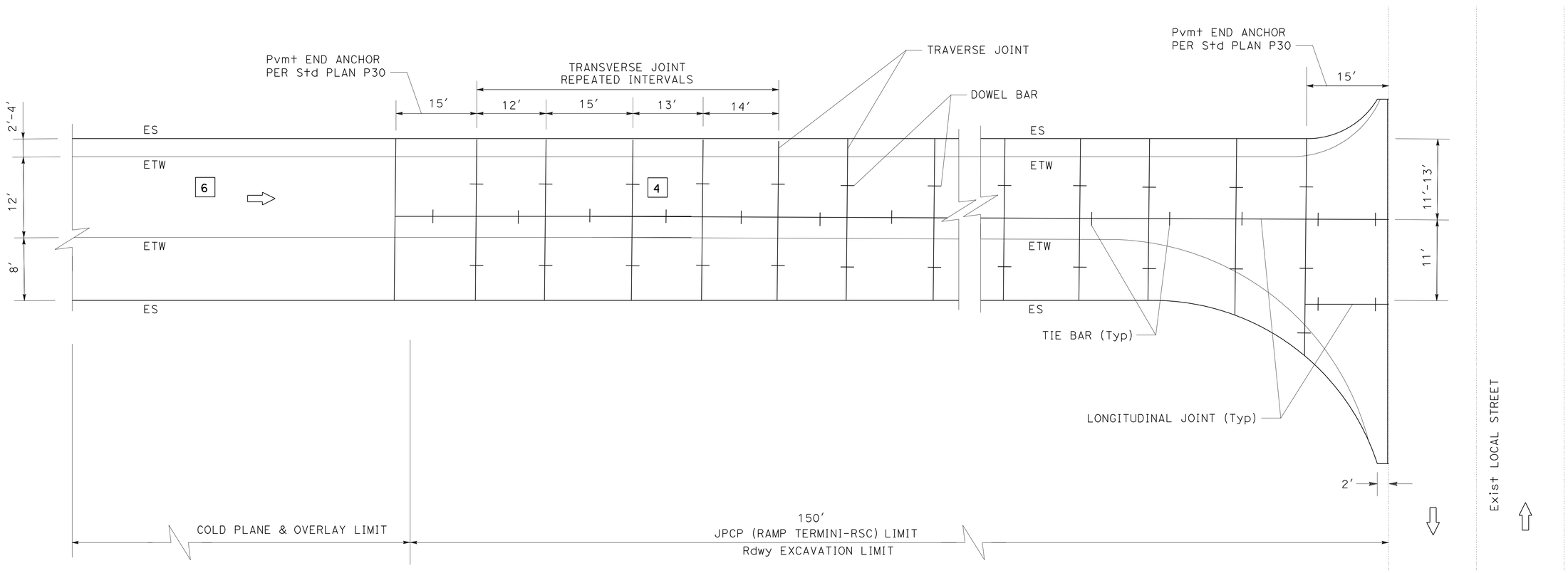

TYPICAL EXIT RAMP DETAIL

AT HECTOR ROAD
AT CRUCERO ROAD
(EASTBOUND/WESTBOUND)

CONSTRUCTION DETAILS

NO SCALE

C-9

STATE OF CALIFORNIA - DEPARTMENT OF TRANSPORTATION
Caltrans® MAINTENANCE ENGINEERING

FUNCTIONAL SUPERVISOR: MICHAEL RISTIC
CALCULATED-DESIGNED BY: YONGBEE LIAU
CHECKED BY: HAO V. HO
REVISED BY / DATE REVISED

LAST REVISION 11-07-11 | DATE PLOTTED => 08-NOV-2011 | TIME PLOTTED => 10:52

Dist	COUNTY	ROUTE	POST MILES TOTAL PROJECT	SHEET No.	TOTAL SHEETS
08	SBd	40	R28.1/R51.0	14	49

W E Wasser 11-07-11
REGISTERED CIVIL ENGINEER DATE

11-07-11
PLANS APPROVAL DATE

REGISTERED PROFESSIONAL ENGINEER W.E.WASSER No. 37378 Exp. 06-30-12 CIVIL STATE OF CALIFORNIA

THE STATE OF CALIFORNIA OR ITS OFFICERS OR AGENTS SHALL NOT BE RESPONSIBLE FOR THE ACCURACY OR COMPLETENESS OF SCANNED COPIES OF THIS PLAN SHEET.

LEGEND:

- CONSTRUCTION AREA SIGN (1 POST)
- CONSTRUCTION AREA SIGN (2 POST)
- CONSTRUCTION WORK AREA
- (1-X) CONSTRUCTION AREA SIGN CODE
- PORTABLE CHANGEABLE MESSAGE SIGN (PCMS)

NOTES:

1) LOCATIONS OF THE CONSTRUCTION AREA SIGNS ARE APPROXIMATE. THE EXACT LOCATIONS WILL BE DETERMINED BY THE ENGINEER.
2) REFER TO Std PLANS T10 AND T14 FOR TRAFFIC CONTROL REQUIREMENTS.
3) MINIMUM SPACING BETWEEN TWO CONSECUTIVE SIGNS SHALL BE 500 FEET OR AS DETERMINED BY THE ENGINEER.

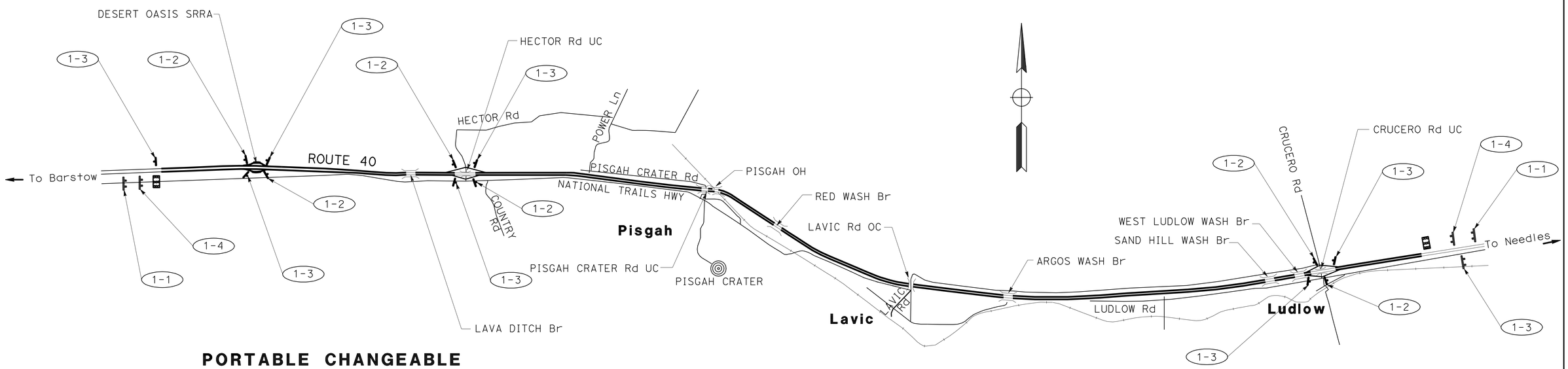

PORTABLE CHANGEABLE MESSAGE SIGN (PCMS)

(EA)
2

STATIONARY CONSTRUCTION AREA SIGN

SIGN No.	SIGN CODE	PANEL SIZE	SIGN MESSAGE	No. OF POST(S) AND SIZE	No. OF SIGNS (EA)
1-1	C40(CA)	144" x 60"	TRAFFIC FINES DOUBLED IN CONSTRUCTION ZONES	2 - 6" x 8"	2
1-2	W20-1	48" x 48"	ROAD WORK AHEAD	1 - 6" x 6"	6
1-3	G20-2	48" x 24"	END ROAD WORK	1 - 4" x 6"	8
1-4	G20-1	90" x 48"	ROAD WORK NEXT 23 MILES	2 - 6" x 6"	2
1-5	C-OVERLAY	48" x 18"	CLOSED	--	2

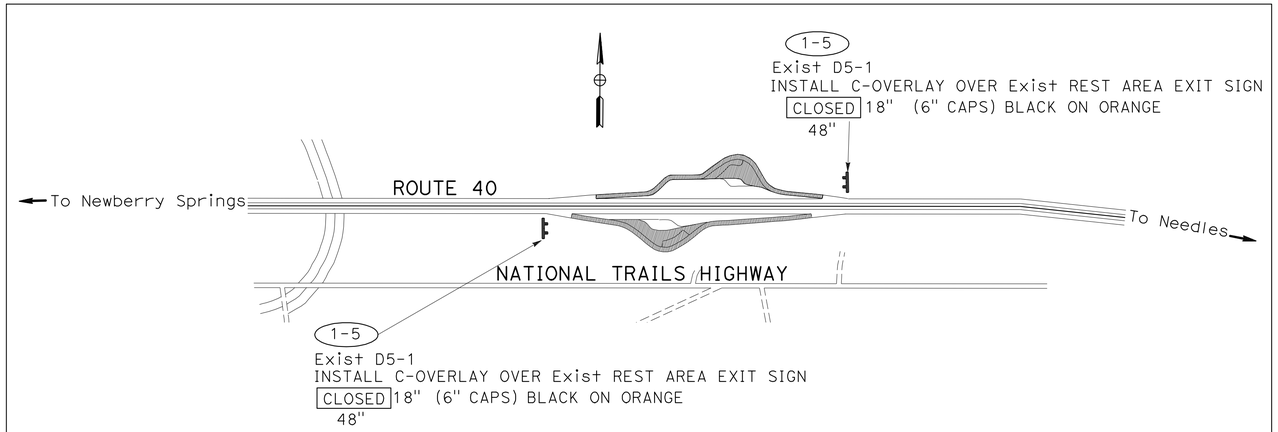

DESERT OASIS SAFETY ROADSIDE REST AREAS

CONSTRUCTION AREA SIGNS

APPROVED FOR CONSTRUCTION AREA SIGN WORK ONLY

NO SCALE

CS-1

STATE OF CALIFORNIA - DEPARTMENT OF TRANSPORTATION
Caltrans
TRAFFIC DESIGN
FUNCTIONAL SUPERVISOR: W.E.WASSER
CALCULATED-DESIGNED BY: PATTI BARTOLI
CHECKED BY: SHABBIR AHMED
REVISED BY
DATE REVISED

LAST REVISION 11-07-11
DATE PLOTTED => 08-NOV-2011
TIME PLOTTED => 10:52

Dist	COUNTY	ROUTE	POST MILES TOTAL PROJECT	SHEET No.	TOTAL SHEETS
08	SBd	40	R28.1/R51.0	15	49

W E Wasser 11-07-11
REGISTERED CIVIL ENGINEER DATE

11-07-11
PLANS APPROVAL DATE

REGISTERED PROFESSIONAL ENGINEER W.E.WASSER No. 37378 Exp. 06-30-12 CIVIL STATE OF CALIFORNIA

THE STATE OF CALIFORNIA OR ITS OFFICERS OR AGENTS SHALL NOT BE RESPONSIBLE FOR THE ACCURACY OR COMPLETENESS OF SCANNED COPIES OF THIS PLAN SHEET.

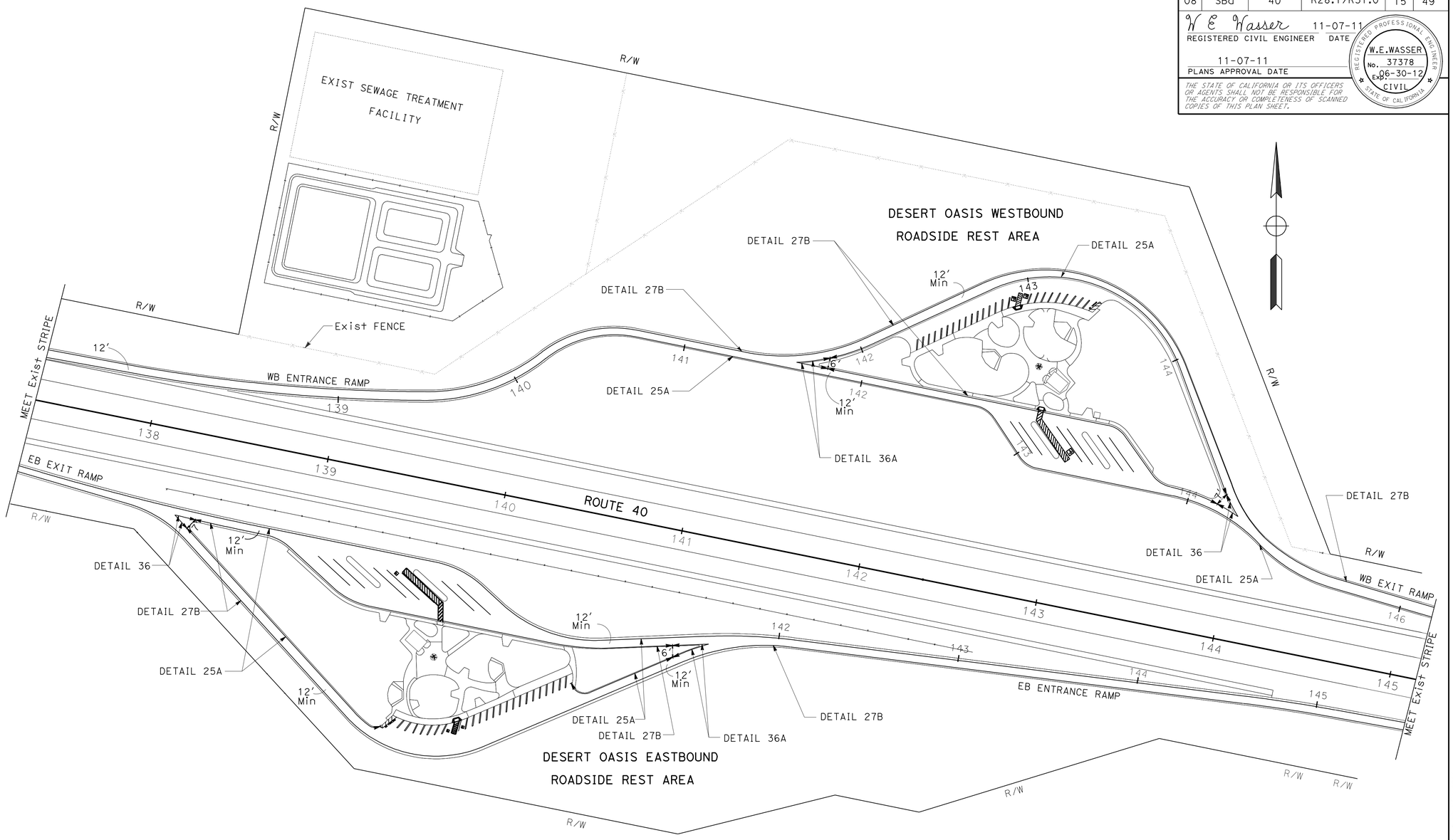

NOTE:

ALL OTHER STRIPES AND PAVEMENT MARKINGS IN REST AREA, MAINLINE AND RAMPS TO BE REPLACED IN KIND.
PLEASE REFER TO PAVEMENT DELINEATION QUANTITIES PDQ-1 THRU PDQ-4.

APPROVED FOR PAVEMENT DELINEATION WORK ONLY

PAVEMENT DELINEATION PLAN

NO SCALE

PD-1

STATE OF CALIFORNIA - DEPARTMENT OF TRANSPORTATION
Caltrans
TRAFFIC DESIGN

FUNCTIONAL SUPERVISOR: W.E. WASSER
CALCULATED-DESIGNED BY: PATTI BARTOLI
CHECKED BY: SHABBIR AHMED
REVISED BY
DATE REVISED

LAST REVISION 11-07-11
DATE PLOTTED => 08-NOV-2011
TIME PLOTTED => 10:52

Dist	COUNTY	ROUTE	POST MILES TOTAL PROJECT	SHEET No.	TOTAL SHEETS
08	SBd	40	R28.1/R51.0	16	49

W E Wasser 11-07-11
REGISTERED CIVIL ENGINEER DATE

11-07-11
PLANS APPROVAL DATE

REGISTERED PROFESSIONAL ENGINEER W.E.WASSER No. 37378 Exp. 06-30-12 CIVIL STATE OF CALIFORNIA

THE STATE OF CALIFORNIA OR ITS OFFICERS OR AGENTS SHALL NOT BE RESPONSIBLE FOR THE ACCURACY OR COMPLETENESS OF SCANNED COPIES OF THIS PLAN SHEET.

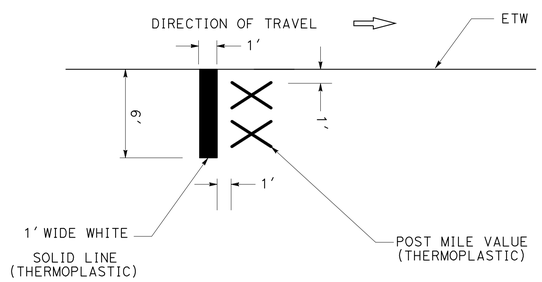

TYPICAL AIRCRAFT PAVEMENT MARKING

AT 5 MILE INTERVALS (FOR POSTMILES 30, 35, 40, 45 AND 50)

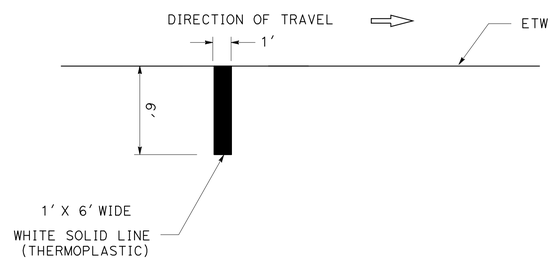

TYPICAL AIRCRAFT PAVEMENT MARKING

AT 1 MILE INTERVALS (FOR POSTMILES 29, 30, 31, 32 etc.)

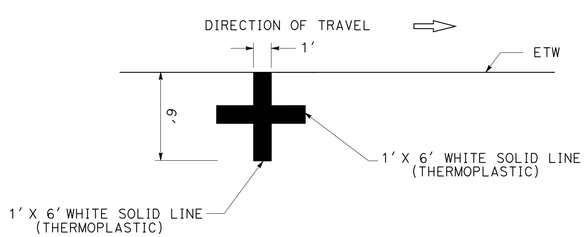

TYPICAL AIRCRAFT PAVEMENT MARKING

AT 1 MILE INTERVALS (FOR POSTMILES 28.5, 29.5, 30.5, ...50.5)

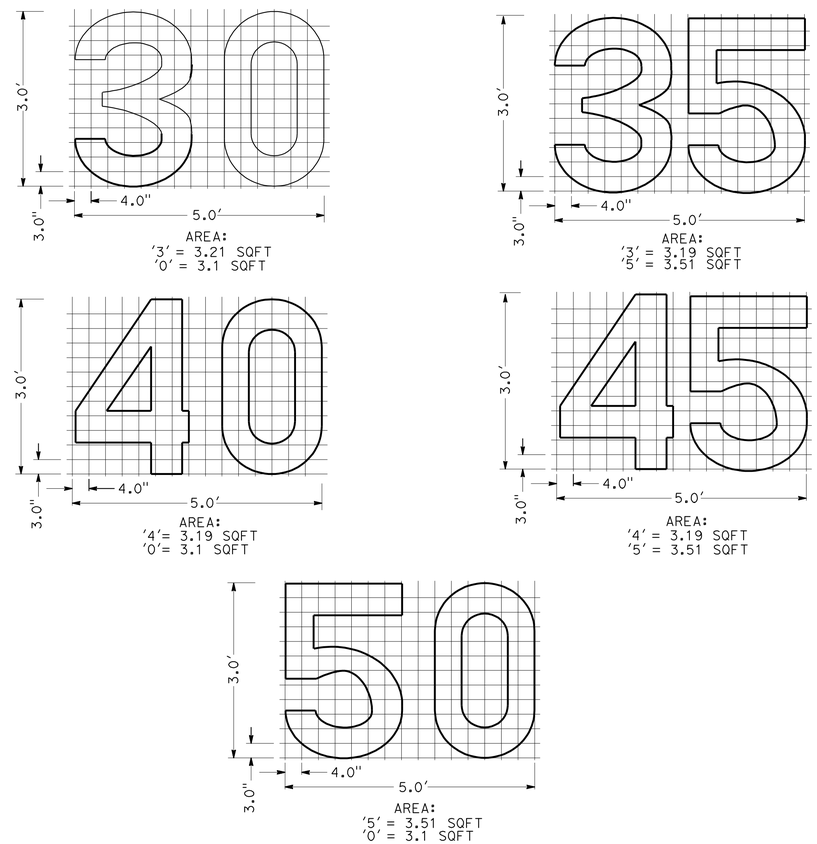

TYPICAL NUMERALS PAVEMENT MARKING

3.0' X 5.0' GRID

APPROVED FOR PAVEMENT DELINEATION WORK ONLY

PAVEMENT DELINEATION DETAILS

NO SCALE

PDD-1

STATE OF CALIFORNIA - DEPARTMENT OF TRANSPORTATION
Caltrans®
TRAFFIC DESIGN

FUNCTIONAL SUPERVISOR: W.E. WASSER
CALCULATED-DESIGNED BY: PATTI BARTOLI
CHECKED BY: SHABBIR AHMED
REVISED BY
DATE REVISED

LAST REVISION 11-07-11
DATE PLOTTED => 08-NOV-2011
TIME PLOTTED => 10:52

Dist	COUNTY	ROUTE	POST MILES TOTAL PROJECT	SHEET No.	TOTAL SHEETS
08	SBd	40	R28.1/R51.0	17	49

W E Wasser 11-07-11
REGISTERED CIVIL ENGINEER DATE

11-07-11
PLANS APPROVAL DATE

REGISTERED PROFESSIONAL ENGINEER W.E.WASSER No. 37378 Exp. 06-30-12 CIVIL STATE OF CALIFORNIA

THE STATE OF CALIFORNIA OR ITS OFFICERS OR AGENTS SHALL NOT BE RESPONSIBLE FOR THE ACCURACY OR COMPLETENESS OF SCANNED COPIES OF THIS PLAN SHEET.

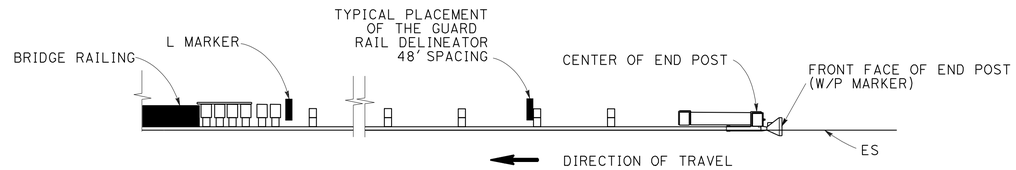

ALONG MBGR (TYPE 12A LAYOUT)

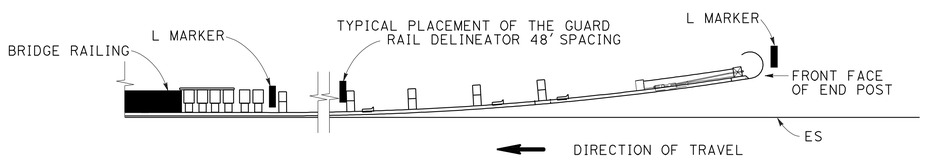

ALONG MBGR (TYPE 12B LAYOUT)

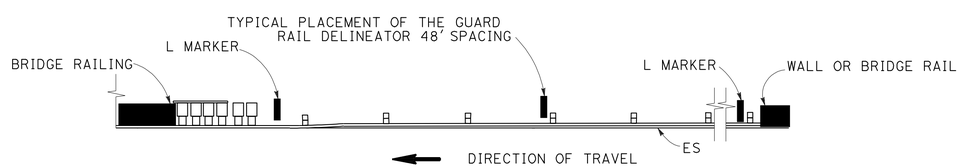

ALONG MBGR (TYPE 12D LAYOUT)

PLACEMENT OF GUARD RAIL DELINEATORS AND L MARKERS

SEE STANDARD PLANS A73A AND A77C4

LEGEND:

- ● TYPE A - WHITE NON-REFLECTIVE MARKER
- ◨ TYPE G - CLEAR RETROREFLECTIVE MARKER

NOTES:

1. MARKERS SHALL BE INSTALLED BEFORE PLACING THE STRIPE.
2. STRIPE SHALL BE THERMOPLASTIC (SPRAYABLE).

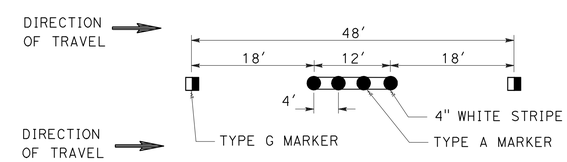

DETAIL 13M

APPROVED FOR PAVEMENT DELINEATION WORK ONLY

PAVEMENT DELINEATION DETAILS

NO SCALE

PDD-2

STATE OF CALIFORNIA - DEPARTMENT OF TRANSPORTATION
Caltrans
TRAFFIC DESIGN

FUNCTIONAL SUPERVISOR: W.E. WASSER
CALCULATED-DESIGNED BY: PATTI BARTOLI
CHECKED BY: SHABBIR AHMED
REVISED BY
DATE REVISED

LAST REVISION 07-12-11
DATE PLOTTED => 08-NOV-2011
TIME PLOTTED => 10:52

USERNAME => gasencio

Dist	COUNTY	ROUTE	POST MILES TOTAL PROJECT	SHEET No.	TOTAL SHEETS
08	SBd	40	R28.1/R51.0	18	49

W E Wasser 11-07-11
REGISTERED CIVIL ENGINEER DATE

11-07-11
PLANS APPROVAL DATE

REGISTERED PROFESSIONAL ENGINEER W.E.WASSER No. 37378 Exp. 06-30-12 CIVIL STATE OF CALIFORNIA

THE STATE OF CALIFORNIA OR ITS OFFICERS OR AGENTS SHALL NOT BE RESPONSIBLE FOR THE ACCURACY OR COMPLETENESS OF SCANNED COPIES OF THIS PLAN SHEET.

NOTES:

1) THE FOLLOWING PCC LOCATIONS SHALL BE REFRESHED WITH THERMOPLASTIC TRAFFIC STRIPE (SPRAYABLE) AND IF NEEDED, WITH MARKERS: WIM WB AND EB, LAVA DITCH BR, HECTOR RD UC, PISGAH CRATER RD UC, PISGAH OH, RED WASH BR, ARGOS WASH BR, SAND HILL WASH BR, WEST LUDLOW WASH BR AND CRUCERO Rd UC.

PAVEMENT DELINEATION QUANTITIES

POSTMILE LIMITS	LOCATION	DETAIL No. OR PAVEMENT MARKING	THERMOPLASTIC TRAFFIC STRIPE (SPRAYABLE)				PAVEMENT MARKER			THERMOPLASTIC PAVEMENT MARKING	REMOVE PAVEMENT MARKING (N)	REMOVE PAVEMENT MARKER (N)
							NON-REFLECTIVE	RETROREFLECTIVE				
			4" YELLOW	4" WHITE	8" WHITE	4" BLUE	TYPE A	TYPE G	TYPE H			
			LF	LF	LF	LF	EA	EA	EA	SQFT	SQFT	EA
PM R28.1 TO PM R51.0	WB MAINLINE	13M		120,912			10,084	2,521				2,521
		27B		120,912								
		25	120,912						2,521			2,521
	EB MAINLINE	13M		120,912			10,084	2,521				2,521
		27B		120,912								
		25	120,912						2,521			2,521
	HECTOR RD EB EXIT RAMP	25A	850						37			37
		27B		1,280								
		36			530			24				24
		TYPE V ARROW (2)								66.0	240.0	
		"STOP" (2)								44.0	102.0	
		"AHEAD" (1)								31.0	64.0	
		LIMIT LINE								33.0	33.0	
	HECTOR RD EB ENTRANCE RAMP	25A	770						34			34
		27B		1,430								
		36A			350			17				17
		8		220								
		TYPE I ARROW (1)								31.0	84.0	
	HECTOR RD WB EXIT RAMP	25A	840						35			35
		27B		1,300								
		36			500			22				22
		TYPE V ARROW (2)								66.0	240.0	
		"STOP" (2)								44.0	102.0	
		"AHEAD" (1)								31.0	64.0	
		LIMIT LINE								42.0	42.0	
	HECTOR RD WB ENTRANCE RAMP	25A	780						34			34
		27B		1,000								
		36A			212			10				10
		8		245								
		TYPE I ARROW (1)								31.0	84.0	
		SUB TOTAL	245,064	489,123	1,592	0	20,168	5,115	5,182	419.0	1,055	10,297

N: NOT A SEPARATE PAY ITEM, FOR INFORMATION ONLY.

REVISED BY | DATE REVISED
PATTI BARTOLI | SHABBIR AHMED
CALCULATED-DESIGNED BY | CHECKED BY
FUNCTIONAL SUPERVISOR
W.E. WASSER

STATE OF CALIFORNIA - DEPARTMENT OF TRANSPORTATION
Caltrans®
TRAFFIC DESIGN

PAVEMENT DELINEATION QUANTITIES

PDQ-1

LAST REVISION 11-07-11 | DATE PLOTTED => 08-NOV-2011 | TIME PLOTTED => 10:53

Dist	COUNTY	ROUTE	POST MILES TOTAL PROJECT	SHEET No.	TOTAL SHEETS
08	SBd	40	R28.1/R51.0	19	49

W E Wasser 11-07-11
REGISTERED CIVIL ENGINEER DATE

11-07-11
PLANS APPROVAL DATE

REGISTERED PROFESSIONAL ENGINEER W.E.WASSER No. 37378 Exp. 06-30-12 CIVIL STATE OF CALIFORNIA

THE STATE OF CALIFORNIA OR ITS OFFICERS OR AGENTS SHALL NOT BE RESPONSIBLE FOR THE ACCURACY OR COMPLETENESS OF SCANNED COPIES OF THIS PLAN SHEET.

PAVEMENT DELINEATION QUANTITIES

POSTMILE LIMITS	LOCATION	DETAIL No. OR PAVEMENT MARKING	THERMOPLASTIC TRAFFIC STRIPE (SPRAYABLE)				PAVEMENT MARKER			THERMOPLASTIC PAVEMENT MARKING	REMOVE PAVEMENT MARKING (N)	REMOVE PAVEMENT MARKER (N)
							NON-REFLECTIVE	RETROREFLECTIVE				
			4" YELLOW	4" WHITE	8" WHITE	4" BLUE	TYPE A	TYPE G	TYPE H			
			LF	LF	LF	LF	EA	EA	EA	SQFT	SQFT	EA
PM R28.1 TO PM R51.0	CRUCERO RD EB EXIT RAMP	25A	1,060						46			46
		27B		1,560								
		36			720			30				30
		TYPE V ARROW (2)								66.0	240.0	
		"STOP" (2)								44.0	102.0	
		"AHEAD" (1)								31.0	64.0	
		LIMIT LINE								55.0	55.0	
	CRUCERO RD EB ENTRANCE RAMP	25A	850						37			37
		27B		1,360								
		36A			330			15				15
		8		160								
		TYPE I ARROW (1)								31.0	84.0	
	CRUCERO RD WB EXIT RAMP	25A	1,240						53			53
		27B		1,780								
		36			715			31				31
		TYPE V ARROW (2)								66.0	240.0	
		"STOP" (2)								44.0	102.0	
		"AHEAD" (1)								31.0	64.0	
		LIMIT LINE								60.0	60.0	
	CRUCERO RD WB ENTRANCE RAMP	25A	1,090						47			47
		27B		1,440								
		36A			370			17				17
		8		150								
		TYPE I ARROW (1)								31.0	84.0	
	MAINLINE AIRCRAFT MARKING	"30" (2)								6.3	15.0	
		"35" (2)								6.7	15.0	
		"40" (2)								6.3	15.0	
		"45" (2)								6.1	15.0	
		"50" (2)								6.6	15.0	
		AIRCRAFT MARKING @ 1-MILE (46)								276.0	276.0	
		AIRCRAFT MARKING @ HALF-MILE (46)								552.0	1,656.0	
		SUB TOTAL	4,240	6,450	2,135	0	0	93	183	1,319.0	3,102.0	276

N: NOT A SEPARATE PAY ITEM, FOR INFORMATION ONLY.

PAVEMENT DELINEATION QUANTITIES

PDQ-2

REVISED BY | DATE REVISED
PATTI BARTOLI | SHABBIR AHMED
CALCULATED-DESIGNED BY | CHECKED BY
FUNCTIONAL SUPERVISOR
W.E. WASSER
STATE OF CALIFORNIA - DEPARTMENT OF TRANSPORTATION
Caltrans
TRAFFIC DESIGN

LAST REVISION 11-07-11
DATE PLOTTED => 08-NOV-2011
TIME PLOTTED => 10:53

Dist	COUNTY	ROUTE	POST MILES TOTAL PROJECT	SHEET No.	TOTAL SHEETS
08	SBd	40	R28.1/R51.0	20	49

W E Wasser 11-07-11
REGISTERED CIVIL ENGINEER DATE

11-07-11
PLANS APPROVAL DATE

REGISTERED PROFESSIONAL ENGINEER W.E.WASSER No. 37378 Exp. 06-30-12 CIVIL STATE OF CALIFORNIA

THE STATE OF CALIFORNIA OR ITS OFFICERS OR AGENTS SHALL NOT BE RESPONSIBLE FOR THE ACCURACY OR COMPLETENESS OF SCANNED COPIES OF THIS PLAN SHEET.

PAVEMENT DELINEATION QUANTITIES

POSTMILE LIMITS	LOCATION	DETAIL No. OR PAVEMENT MARKING	THERMOPLASTIC TRAFFIC STRIPE (SPRAYABLE)				PAVEMENT MARKER			THERMOPLASTIC PAVEMENT MARKING	REMOVE PAVEMENT MARKING (N)	REMOVE PAVEMENT MARKER (N)
							NON-REFLECTIVE	RETROREFLECTIVE				
			4" YELLOW	4" WHITE	8" WHITE	4" BLUE	TYPE A	TYPE G	TYPE H			
			LF	LF	LF	LF	EA	EA	EA	SQFT	SQFT	EA
PM R28.1 TO PM R51.0	DESERT OASIS EASTBOUND ROADSIDE REST AREA	27B		4,700								
		36			1,250			53				53
		36A			225			10				10
		8		250								
		25A	2,800						118			118
		18′ WHITE PARKING STALL STRIPE				1,000						
		ISA MARKING								69.0	60.0	
		18′ BLUE PARKING STALL STRIPE				84						
		DIAGONAL BLUE STRIPE (25′ long)				450						
		DIAGONAL WHITE STRIPE (15′long)		45								
		DIAGONAL BLUE STRIPE (5′long)				15						
		60′ WHITE PARKING STALL STRIPE		360								
		60′ BLUE PARKING STALL STRIPE			160							
		TYPE V ARROW								231.0	840.0	
		"NO PARKING"								2.0	4.9	
		BLUE CROSSWALK								90.0	90.0	
PM R28.1 TO PM R51.0	DESERT OASIS WESTBOUND ROADSIDE REST AREA	27B		4,355								
		36			670			29				29
		36A			245			12				12
		8		290								
		25A	3,355						141			141
		TYPE V ARROW								132.0	480.0	
		18′ WHITE PARKING STALL STRIPE				920						
		ISA MARKING								69.0	60.0	
		18′ BLUE PARKING STALL STRIPE				84						
		DIAGONAL WHITE STRIPE (15′long)		45								
		DIAGONAL BLUE STRIPE (25′long)				450						
		80′ WHITE PARKING STALL STRIPE		560								
		80′ BLUE PARKING STALL STRIPE				80						
		"NO PARKING"								2.0	4.9	
		BLUE CROSSWALK								90.0	90.0	
		SUB TOTAL	6,155	10,605	2,550	3,083	0	104	259	685.0	1,629.8	363
		TOTAL	770,997				20,168	10,936		2,423.0	5,786.8	10,936

N: NOT A SEPARATE PAY ITEM, FOR INFORMATION ONLY.

PAVEMENT DELINEATION QUANTITIES

PDQ-3

STATE OF CALIFORNIA - DEPARTMENT OF TRANSPORTATION
Caltrans® TRAFFIC DESIGN

FUNCTIONAL SUPERVISOR: W.E. WASSER
CALCULATED-DESIGNED BY / CHECKED BY
REVISED BY: PATTI BARTOLI
DATE REVISED: SHABBIR AHMED

LAST REVISION 11-07-11
DATE PLOTTED => 08-NOV-2011
TIME PLOTTED => 10:53

Dist	COUNTY	ROUTE	POST MILES TOTAL PROJECT	SHEET No.	TOTAL SHEETS
08	SBd	40	R28.1/R51.0	21	49

W E Wasser 11-07-11
REGISTERED CIVIL ENGINEER DATE

11-07-11
PLANS APPROVAL DATE

REGISTERED PROFESSIONAL ENGINEER W.E.WASSER No. 37378 Exp. 06-30-12 CIVIL STATE OF CALIFORNIA

THE STATE OF CALIFORNIA OR ITS OFFICERS OR AGENTS SHALL NOT BE RESPONSIBLE FOR THE ACCURACY OR COMPLETENESS OF SCANNED COPIES OF THIS PLAN SHEET.

NOTE:

1. GUARDRAIL DELINEATOR TO BE REMOVED WITH GUARDRAIL REMOVAL.
2. REMOVE MARKERS INCLUDE L-MARKERS AND DELINEATORS.

DELINEATOR AND MARKER QUANTITIES

POSTMILE	DIRECTION	LOCATION	APPROACH ORIENTATION	DELINEATOR (CLASS 1) TYPE F EA	MARKER TYPE L EA	REMOVE MARKER EA
31.42	EB	LAVIC DITCH Br	INSIDE SHLR	1	2	2
			OUTSIDE SHLR	1	2	1
32.50	EB	HECTOR Rd UC	INSIDE SHLR	1	1	1
			OUTSIDE SHLR	1	1	1
37.27	EB	PISGAH CRATER Rd UC	INSIDE SHLR	3	1	1
			OUTSIDE SHLR	8	1	1
37.41	EB	PISGAH OH	INSIDE SHLR	15	2	1
			OUTSIDE SHLR	15	2	1
39.00	EB	RED WASH Br	INSIDE SHLR	2	2	1
			OUTSIDE SHLR	0	1	2
41.91	EB	LAVIC Rd OC	INSIDE SHLR	0	0	0
			OUTSIDE SHLR	0	0	0
43.84	EB	ARGOS WASH Br	INSIDE SHLR	1	1	1
			OUTSIDE SHLR	0	2	2
49.04	EB	SAND HILL WASH Br	INSIDE SHLR	0	1	1
			OUTSIDE SHLR	0	2	3
49.71	EB	WEST LUDLOW WASH Br	INSIDE SHLR	0	2	1
			OUTSIDE SHLR	0	2	1
49.98	EB	CRUCERO Rd UC	INSIDE SHLR	0	1	1
			OUTSIDE SHLR	6	2	2
			SUBTOTAL	54	28	24

DELINEATOR AND MARKER QUANTITIES

POSTMILE	DIRECTION	LOCATION	APPROACH ORIENTATION	DELINEATOR (CLASS 1) TYPE F EA	OBJECT MARKER TYPE L EA	REMOVE MARKER EA
31.42	WB	LAVIC DITCH Br	INSIDE SHLR	1	1	1
			OUTSIDE SHLR	1	1	1
32.50	WB	HECTOR Rd UC	INSIDE SHLR	1	1	1
			OUTSIDE SHLR	1	2	2
37.27	WB	PISGAH CRATER Rd UC	INSIDE SHLR	12	2	1
			OUTSIDE SHLR	11	2	1
37.41	WB	PISGAH OH	INSIDE SHLR	0	1	2
			OUTSIDE SHLR	16	2	2
39.00	WB	RED WASH Br	INSIDE SHLR	1	1	1
			OUTSIDE SHLR	0	2	2
41.91	WB	LAVIC Rd OC	INSIDE SHLR	0	0	0
			OUTSIDE SHLR	0	0	0
43.84	WB	ARGOS WASH Br	INSIDE SHLR	1	1	1
			OUTSIDE SHLR	0	2	2
49.04	WB	SAND HILL WASH Br	INSIDE SHLR	0	1	1
			OUTSIDE SHLR	0	2	2
49.71	WB	WEST LUDLOW WASH Br	INSIDE SHLR	0	1	1
			OUTSIDE SHLR	1	2	2
49.98	WB	CRUCERO Rd UC	INSIDE SHLR	1	2	1
			OUTSIDE SHLR	11	2	1
			SUBTOTAL	58	28	25
			TOTAL	112	56	49

PAVEMENT DELINEATION QUANTITIES

PDQ-4

REVISED BY | DATE REVISED
PATTI BARTOLI | SHABBIR AHMED
CALCULATED-DESIGNED BY | CHECKED BY
FUNCTIONAL SUPERVISOR: W.E. WASSER

STATE OF CALIFORNIA - DEPARTMENT OF TRANSPORTATION
Caltrans® TRAFFIC DESIGN

LAST REVISION 11-07-11 | DATE PLOTTED => 08-NOV-2011 | TIME PLOTTED => 10:53

Dist	COUNTY	ROUTE	POST MILES TOTAL PROJECT	SHEET No.	TOTAL SHEETS
08	SBd	40	R28.1/R51.0	22	49

REGISTERED CIVIL ENGINEER 11-07-11 DATE

11-07-11
PLANS APPROVAL DATE

REGISTERED PROFESSIONAL ENGINEER YONGBEE LIAU No. C75571 Exp. 6-30-12 CIVIL STATE OF CALIFORNIA

THE STATE OF CALIFORNIA OR ITS OFFICERS OR AGENTS SHALL NOT BE RESPONSIBLE FOR THE ACCURACY OR COMPLETENESS OF SCANNED COPIES OF THIS PLAN SHEET.

NOTES:

1. SEE SHEET Q-4 FOR ADDITIONAL PLACE ASPHALT CONCRETE DIKE, ASPHALT CONCRETE, AND REMOVE ASPHALT CONCRETE DIKE QUANTITIES
2. LEFT (Lt) AND RIGHT (Rt) SIDES BASED ON POSTMILE LOOKING IN THE INCREASING ORDER DIRECTION.
3. PLACEMENT AND REMOVAL OF METAL BEAM GUARD RAILING SHALL BE AS SHOWN OR AS DIRECTED BY THE ENGINEER.

METAL BEAM GUARD RAILING QUANTITIES

PM	LOCATION	BRIDGE No.	DIRECTION	Exist Br RAILING	LAYOUT TYPE		MBGR (STEEL POST)		Dbl MBGR (STEEL POST)		TRANS RAILING (TYPE WB)		ALT FLARED TERMINAL SYSTEM		ALT IN-LINE TERMINAL SYSTEM		END ANCHOR ASSEMBLY (TYPE SFT)		END CAP (TYPE A)		END CAP (TYPE TC)		CRASH CUSHION (TYPE CAT)		CRASH CUSHION (TYPE CAT) BACKUP		SALVAGE MBGR		MINOR CONC		PLACE AC DIKE (TYPE C)		PLACE AC DIKE (TYPE F)		HMA (FOR AC DIKE)		REMOVE AC DIKE	
							LF		LF		EA		EA		EA		EA		EA		EA		EA		EA		LF		CY		LF		LF		Ton		LF	
				TYPE	Lt	Rt	Lt	Rt	Lt	Rt	Lt	Rt	Lt	Rt	Lt	Rt	Lt	Rt	Lt	Rt	Lt	Rt	Lt	Rt	Lt	Rt	Lt	Rt	Lt	Rt	Lt	Rt	Lt	Rt	Lt	Rt	Lt	Rt
31.42	LAVIC DITCH Br (APPROACH)	540718R	EB	TYPE 1	12B	12B	37.5	37.5			1	1	1	1							1	1					102	102	0.81	0.81		62.5		62.5		1.32		125
32.50	HESTOR Rd UC (APPROACH)	540719R	EB	TYPE 1	12A	12A	37.5	37.5			1	1			1	1					1	1					116	116	0.81	0.81		72		62.5		1.39		137.5
37.27	PISGAH CRATER Rd UC (APPROACH)	540691R	EB	TYPE 1	12A	12A	100	350			1	1			1	1					1	1					180	430	0.81	0.81				425		5.68		450
37.41	PISGAH OH (APPROACH)	540689R	EB	TYPE 1	12D	12D	712.5	712.5			1	1							1	1	1	1					740	740	0.81	0.81			740	740	9.89	9.89	740	740
	PISGAH OH (DEPARTURE)				12DD		625										1		1								625						625		8.35		625	
39.00	RED WASH Br (APPROACH)	540690R	EB	TYPE 1	12B	12B	187.5	12.5			1	1	1	1							1	1					115	64	0.81	0.81								
41.91	UNDER LAVIC Rd OC (APPROACH)	540734	EB	Exist PIER	14A		37.5		25								1						1		1		87.5											
43.84	ARGOS WASH Br (APPROACH)	540737R	EB	TYPE 9	12A	12B	37.5	12.5			1	1		1	1						1	1					105	75	0.81	0.81				37.5		0.50		37.5
44.30	(Exist CULVERT)		EB		16B	16B	162.5	162.5					1	1			1	1									200	200				62.5		162.5		2.65		225
45.05	(Exist CULVERT)		EB		16A	16A	137.5	150							1	1	1	1									187.5	200				25		200		2.87		225
46.00	(Exist CULVERT)		EB		16A	16B	150	162.5						1	1		1	1									200	200				62.5		162.5		2.65		225
46.40	(Exist CULVERT)		EB		16B	16B	162.5	162.5					1	1			1	1									200	200				62.5		162.5		2.65		225
47.75	(Exist CULVERT)		EB		16B	16A	162.5	150					1			1	1	1									200	200				25		200		2.87		225
48.10	(Exist CULVERT)		EB		16B	16B	162.5	262.5					1	1			1	1									200	300				62.5		262.5		3.99		325
49.04	SAND HILL WASH Br (APPROACH)	540736R	EB	TYPE 9	12A	12B		12.5			1	1		1	1						1	1					75	75	0.81	0.81								
49.71	WEST LUDLOW WASH Br APPROACH)	540079R	EB	TYPE 9	12B	12B	12.5	12.5			1	1	1	1							1	1					75	75	0.81	0.81		62.5		37.5		0.98		100
	WEST LUDLOW WASH Br (DEPARTURE)					12DD		100										1		1								100						100		1.34		100
49.98	CRUCERO Rd UC (APPROACH)	540735R	EB	TYPE 9	12E	12B	25.0	250	262.5		1	1		1							1	1	1		1		100	313	0.81	0.81				275		3.68		338
	CRUCERO Rd UC (DEPARTURE)					12DD		250										1		1								250						250		3.34		250
50.95	(Exist CULVERT)		EB		16B	16B	150	87.5					1	1													187.5	125										
EASTBOUND SUBTOTAL							5825		287.5		18		19		10		16		5		18		2		2		7460.5		14.58		497		4505		64.04		5093	

SUMMARY OF QUANTITIES

Q-1

STATE OF CALIFORNIA - DEPARTMENT OF TRANSPORTATION
Caltrans® MAINTENACE ENGINEERING

FUNCTIONAL SUPERVISOR: MICHAEL RISTIC
CALCULATED-DESIGNED BY: YONGBEE LIAU
CHECKED BY: HAO V. HO
REVISED BY
DATE REVISED

LAST REVISION 11-07-11
DATE PLOTTED => 08-NOV-2011
TIME PLOTTED => 10:53

Dist	COUNTY	ROUTE	POST MILES TOTAL PROJECT	SHEET No.	TOTAL SHEETS
08	SBd	40	R28.1/R51.0	23	49

REGISTERED CIVIL ENGINEER 11-07-11 DATE

11-07-11
PLANS APPROVAL DATE

REGISTERED PROFESSIONAL ENGINEER YONGBEE LIAU No. C75571 Exp. 6-30-12 CIVIL STATE OF CALIFORNIA

THE STATE OF CALIFORNIA OR ITS OFFICERS OR AGENTS SHALL NOT BE RESPONSIBLE FOR THE ACCURACY OR COMPLETENESS OF SCANNED COPIES OF THIS PLAN SHEET.

NOTES:
1. SEE SHEET Q-4 FOR ADDITIONAL PLACE ASPHALT CONCRETE DIKE, ASPHALT CONCRETE, AND REMOVE ASPHALT CONCRETE DIKE QUANTITIES
2. LEFT (L+) AND RIGHT (R+) SIDES BASED ON POSTMILE LOOKING IN THE INCREASING ORDER DIRECTION.
3. PLACEMENT AND REMOVAL OF METAL BEAM GUARD RAILING SHALL BE AS SHOWN OR AS DIRECTED BY THE ENGINEER.

METAL BEAM GUARD RAILING QUANTITIES

PM	LOCATION	BRIDGE No.	DIRECTION	Exist Br RAILING	LAYOUT TYPE		MBGR (STEEL POST)		Dbl MBGR (STEEL POST)		TRANS RAILING (TYPE WB)		ALT FLARED TERMINAL SYSTEM		ALT IN-LINE TERMINAL SYSTEM		END ANCHOR ASSEMBLY (TYPE SFT)		END CAP (TYPE A)		END CAP (TYPE TC)		CRASH CUSHION (TYPE CAT)		CRASH CUSHION (TYPE CAT) BACKUP		SALVAGE MBGR		MINOR Conc MINOR Struct		PLACE AC DIKE (TYPE C)		PLACE AC DIKE (TYPE F)		HMA (FOR AC DIKE)		REMOVE AC DIKE	
							LF		LF		EA		EA		EA		EA		EA		EA		EA		EA		LF		CY		LF		LF		Ton		LF	
				TYPE	L+	R+	L+	R+	L+	R+	L+	R+	L+	R+	L+	R+	L+	R+	L+	R+	L+	R+	L+	R+	L+	R+	L+	R+	L+	R+	L+	R+	L+	R+	L+	R+	L+	R+
31.42	LAVIC DITCH Br (APPROACH)	540718L	WB	TYPE 1	12A	12A	37.5	37.5			1	1			1	1					1	1					112.5	112.5	0.81	0.81	75		62.5		1.41		137.50	
32.50	HECTOR Rd UC (APPROACH)	540719L	WB	TYPE 1	12B	12A	37.5	37.5			1	1	1			1					1	1					100	112.5	0.81	0.81	62.5		62.5		1.32		125	
37.27	PISGAH CRATER Rd UC (APPROACH)	540691L	WB	TYPE 1	12D	12D	500	562.5			1	1							1	1	1	1					525	587.5	0.81	0.81			525	587.5	7.02	7.85	525	587.5
	PISGAH CRATER Rd UC (DEPARTURE)				12DD		337.5										1		1								337.5						337.5		4.51		337.5	
37.41	PISGAH OH (APPROACH)	540689L	WB	TYPE 1	12B	12A	750	562.5			1	1		1	1						1	1					825	562.5	0.81	0.81		62.5		587.5		8.33		650
39.00	RED WASH Br (APPROACH)	540690L	WB	TYPE 1	12B	12A		37.5			1	1	1			1					1	1					62.5	112.5	0.81	0.81	62.5		25		0.82		87.5	
41.91	UNDER LAVIC Rd OC (APPROACH)	540734	WB	Exist PIER		16A		175								1		1										87.5										
43.84	ARGOS WASH Br (APPROACH)	540737L	WB	TYPE 9	12B	12A	12.5	37.5			1	1	1			1					1	1					75	112.5	0.81	0.81								
44.30	(Exist CULVERT)		WB		16B	16B	162.5	162.5					1	1			1	1									200	200				62.5		162.5		2.65		225
45.05	(Exist CULVERT)		WB		16A	16B	150.0	162.5						1	1		1	1									200	200			25		200		2.87		225	
46.00	(Exist CULVERT)		WB		16A	16A	162.5	150.0							1	1	1	1									212.5	200			25		212.5		3.03		237.5	
46.40	(Exist CULVERT)		WB		16B	16A	162.5	150.0					1		1		1	1									200	200			62.5		162.5		2.65		225	
47.75	(Exist CULVERT)		WB		16A	16A	150.0	150.0							1	1	1	1									200	200			25		200		2.87		225	
48.10	(Exist CULVERT)		WB		16B	16B	162.5	162.5					1	1			1	1									200	200			62.5		162.5		2.65		225	
49.04	SAND HILL WASH Br (APPROACH)	540736L	WB	TYPE 9	12B	12A	12.5				1	1	1			1					1	1					75	75	0.81	0.81	62.5		37.5		0.98		87.5	
49.71	WEST LUDLOW WASH Br (APPROACH)	540079L	WB	TYPE 9	12B	12A	37.5	25			1	1	1			1					1	1					100	100	0.81	0.81	62.5		62.5		1.32		125	
49.98	CRUCERO Rd UC (APPROACH)	540735L	WB	TYPE 9	12B	12E	500	25		262.5	1	1	1								1	1		1		1	562.5	100	0.81	0.81	62.5		525		7.50		587.5	
49.98	CRUCERO Rd UC (DEPARTURE)	540735L	WB	TYPE 9	12DD		500										1		1								500						500		6.68		500	
WESTBOUND SUBTOTAL							6112.5		262.5		18		13		15		15		4		18		1		1		7650		15		713		4413		64		5113	
TOTAL							11937.5		550		36		32		25		31		9		36		3		3		15110.5		29.16		1209.5		8917.5 *		128.5 *		10205.5 *	

* SEE ADDITIONAL QUANTITIES ON SHEET Q-4.

SUMMARY OF QUANTITIES

Q-2

STATE OF CALIFORNIA - DEPARTMENT OF TRANSPORTATION
Caltrans® MAINTENACE ENGINEERING

FUNCTIONAL SUPERVISOR: MICHAEL RISTIC
CALCULATED-DESIGNED BY: YONGBEE LIAU
CHECKED BY: HAO V. HO
REVISED BY
DATE REVISED

LAST REVISION 11-07-11
DATE PLOTTED => 08-NOV-2011
TIME PLOTTED => 10:53

Dist	COUNTY	ROUTE	POST MILES TOTAL PROJECT	SHEET No.	TOTAL SHEETS
08	SBd	40	R28.1/R51.0	24	49

REGISTERED CIVIL ENGINEER 11-07-11 DATE

11-07-11
PLANS APPROVAL DATE

REGISTERED PROFESSIONAL ENGINEER YONGBEE LIAU No. C75571 Exp. 6-30-12 CIVIL STATE OF CALIFORNIA

THE STATE OF CALIFORNIA OR ITS OFFICERS OR AGENTS SHALL NOT BE RESPONSIBLE FOR THE ACCURACY OR COMPLETENESS OF SCANNED COPIES OF THIS PLAN SHEET.

PAVEMENT QUANTITIES

ROUTE 40 POSTMILE/LOCATION	COLD PLANE Pvmt	HMA (TYPE C)	RUBBERIZED HMA (GAP GRADED)	TACK COAT	RUMBLE STRIP (GROUND-IN)	ROADWAY EXCAVATION	CLASS 2 AGGREGATE BASE	JPCP (RAMP TERMINI-RSC)	SEAL Pvmt JOINT	REMARK
	SQYD	TON	TON	TON	STA	CY	CY	CY	LF	
28.1/32.0	109,824	30,641		31.2						MAINLINE TRAVEL WAYS
32.0/36.0	112,640	19,642		31.6						MAINLINE TRAVEL WAYS
36.0/38.0	56,320	14,240		16.0						MAINLINE TRAVEL WAYS
38.0/40.0	56,320	9,821		15.8						MAINLINE TRAVEL WAYS
40.0/42.0	56,320	11,294		15.8						MAINLINE TRAVEL WAYS
42.0/51.0	253,440	44,194		71.1						MAINLINE TRAVEL WAYS
28.1/32.0			7,660	15.2	824					MAINLINE TRAVEL WAYS
32.0/36.0			7,857	15.6	845					MAINLINE TRAVEL WAYS
36.0/38.0			3,928	7.8	422					MAINLINE TRAVEL WAYS
38.0/40.0			3,928	7.8	422					MAINLINE TRAVEL WAYS
40.0/42.0			3,928	7.8	422					MAINLINE TRAVEL WAYS
42.0/51.0			17,677	35.1	1,901					MAINLINE TRAVEL WAYS
28.1/51.0	403,040		42,168	110.8						SHOULDERS
HMA UNDER DIKES			3,834	10.1						SHOULDERS
EB REST AREA PARKING LOT	14,950		1,564	4.1						
WB REST AREA PARKING LOT	14,261		1,492	3.9						
EB REST AREA OFFRAMP	2,187		229	0.6						
EB REST AREA ONRAMP	2,960		310	0.8						
WB REST AREA OFFRAMP	2,933		307	0.8						
WB REST AREA ONRAMP	2,293		240	0.6						
EB HECTOR ROAD EXIT RAMP	2,987		312	0.8		238	95	143	438	
EB HECTOR ROAD ENTRANCE RAMP	2,987		312	0.8						
WB HECTOR ROAD EXIT RAMP	2,613		273	0.7		238	95	143	438	
WB HECTOR ROAD ENTRANCE RAMP	2,933		307	0.8						
EB CRUCERO ROAD EXIT RAMP	3,733		391	1.0		238	95	143	438	
EB CRUCERO ROAD ENTRANCE RAMP	3,013		315	0.8						
WB CRUCERO ROAD EXIT RAMP	3,387		354	0.9		238	95	143	438	
WB CRUCERO ROAD ENTRANCE RAMP	4,160		435	1.1						
EB TURNOUT PM 30.2	6,500		680	1.8						
WB TURNOUT PM 29.5	1,310		137	0.4						
	1,121,111	129,832	98,638	411.6	4,836	952 *	380	572	1,752	

* - SEE ADDITIONAL QUANTITIES ON SHEET Q-4.

STORM WATER POLLUTION CONTROL QUANTITIES

ITEM DESCRIPTION	UNIT	QUANTITY
TEMPORARY CONCRETE WASHOUT BIN	EA	2

SUMMARY OF QUANTITIES

Q-3

REVISED BY | DATE REVISED
YONGBEE LIAU | HAO V. HO
CALCULATED-DESIGNED BY | CHECKED BY
FUNCTIONAL SUPERVISOR: MICHAEL RISTIC
STATE OF CALIFORNIA - DEPARTMENT OF TRANSPORTATION
Caltrans® MAINTENACE ENGINEERING

LAST REVISION 11-07-11 | DATE PLOTTED => 08-NOV-2011 TIME PLOTTED => 10:54

Dist	COUNTY	ROUTE	POST MILES TOTAL PROJECT	SHEET No.	TOTAL SHEETS
08	SBd	40	R28.1/R51.0	25	49

REGISTERED CIVIL ENGINEER DATE 11-07-11

PLANS APPROVAL DATE 11-07-11

REGISTERED PROFESSIONAL ENGINEER YONGBEE LIAU No. C75571 Exp. 6-30-12 CIVIL STATE OF CALIFORNIA

THE STATE OF CALIFORNIA OR ITS OFFICERS OR AGENTS SHALL NOT BE RESPONSIBLE FOR THE ACCURACY OR COMPLETENESS OF SCANNED COPIES OF THIS PLAN SHEET.

DRAINAGE AND MISCELLLANEOUS QUANTITIES

LOCATION POST MILE			No. OF LOCATIONS	10'' TAPERED INLET	10'' CORRUGATED STEEL FLUME DOWNDRAIN	FLUME ANCHOR ASSEMBLY	PLACE HMA (Misc AREA)	HOT MIX ASPHALT (TYPE A)	ROADWAY EXCAVATION	CURB RAMP DETECTABLE WARNING SURFACE	TACK COAT	DESCRIPTION
	FROM	TO		EA	LF	EA	SQYD	Ton	CY	SQFT		
ROUTE 40 EB	28.1	51.0	5	5	100	15	60.0	8.4			.02	FLUME DOWNDRAIN
	28.1	51.0	65				780.0	109	234		.21	REPLACE AC PAVING AT Exist DOWN DRAIN OR AC OVERSIDE DRAIN
	DESERT OASIS SRRA		2							24		SEE SHEET C-7
ROUTE 40 WB	28.1	51.0	5	5	100	15	60.0	8.4			.02	FLUME DOWNDRAIN
	28.1	51.0	65				780.0	109	234		.21	REPLACE AC PAVING AT Exist DOWN DRAIN OR AC OVERSIDE DRAIN
	DESERT OASIS SRRA		2							24		SEE SHEET C-7
TOTAL				10	200	30	1,680	234.8	468	48	0.46	

ASPHALT CONCRETE DIKE QUANTITIES

LOCATION POST MILE		PLACE HMA DIKE (TYPE D)		PLACE HMA DIKE (TYPE E)		PLACE HMA DIKE (TYPE F)		HMA (TYPE A)	REMOVE AC DIKE
FROM	TO	LF		LF		LF		TON	LF
ROUTE 40 EASTBOUND		LT	RT	LT	RT	LT	RT		
29.0	30.2		6,336					388.5	6,336
30.6	32.6		10,560					647.4	10,560
32.9	34.2		6,864					420.8	6,864
34.5	34.9		2,112					129.5	2,112
35.2	35.5		1,584					97.1	1,584
37.0	37.2		1,056					64.7	1,056
37.2	37.5						1,584	21.9	1,584
37.5	38.3		4,224					259.0	4,224
39.0	39.5		2,640					161.9	2,640
39.9	40.4		2,640					161.9	2,640
40.5	41.2		3,696					226.6	3,696
41.7	42.0		1,584					97.1	1,584
42.0	42.1				528			14.4	528
44.0	44.7				3,696			100.5	3,696
44.9	48.1				16,896			459.6	16,896
45.5	45.7			1,056				28.7	1,056
49.9	50.0				528			14.4	528
HECTOR ROAD EB ENTRANCE RAMP			739					45.3	739
HECTOR ROAD EB EXIT RAMP			700					42.9	700
CRUCERO ROAD EB EXIT RAMP					269			7.3	269
CRUCERO ROADEB ENTRANCE RAMP					1,067			29.0	1,067
SUBTOTAL			44,735	1,056	22,984		1,584	3,418.5	70,359
ROUTE 40 WESTBOUND									
28.10	33.3	27,456						1,683.3	27,456
34.0	34.1	528						32.4	528
35.2	35.4	1,056						64.7	1,056
35.7	36.0	1,584						97.1	1,584
37.1	37.2	528						32.4	528
37.5	37.9		2,112					129.5	2,112
39.0	39.8	4,224						259.0	4,224
40.0	40.1	528						32.4	528
40.5	42.0	7,920						485.6	7,920
44.3	44.6			1,584				43.1	1,584
44.1	48.1			21,120				574.5	21,120
48.9	49.0			528				14.4	528
48.7	49.8			5,808				158.0	5,808
49.8	50.2			2,112				57.5	2,112
HECTOR ROAD WB EXIT RAMP		834						51.1	834
HECTOR ROAD WB ENTRANCE RAMP		800						49.0	800
REST AREA WB ENTRANCE RAMP		500						30.7	500
REST AREA WB EXIT RAMP		800						49.0	800
CRUCERO ROAD WB EXIT RAMP		50	50	400				17.0	500
CRUCERO ROAD WB ENTRANCE RAMP				800				21.8	800
SUBTOTAL		46,808	2,162	32,352				3,882.5	81,322
TOTAL		93,705		56,392		1,584		7,301	151,681

(N) NOT A SEPARATE PAY ITEM. FOR INFORMATION ONLY.

NOTES:

1. LOCATIONS AND QUANTITIES SHOWN ARE APPROXIMATE
2. EXACT LOCATIONS SHALL BE AS DIRECTED BY THE ENGINEER.
3. LEFT (L+) AND RIGHT (R+) SIDES BASED ON POSTMILE LOOKING IN THE INCREASING ORDER DIRECTION.

SUMMARY OF QUANTITIES

Q-4

REVISED BY | DATE REVISED

YONGBEE LIAU | HAO V. HO

CALCULATED-DESIGNED BY | CHECKED BY

FUNCTIONAL SUPERVISOR: MICHAEL RISTIC

STATE OF CALIFORNIA - DEPARTMENT OF TRANSPORTATION

Caltrans® MAINTENACE ENGINEERING

LAST REVISION 11-07-11 | DATE PLOTTED => 08-NOV-2011 TIME PLOTTED => 10:54

Dist	COUNTY	ROUTE	POST MILES TOTAL PROJECT	SHEET No.	TOTAL SHEETS
08	SBd	40	R28.1/R51.0	26	49

Randell D. Hiatt
REGISTERED CIVIL ENGINEER

May 20, 2011
PLANS APPROVAL DATE

REGISTERED PROFESSIONAL ENGINEER
Randell D. Hiatt
No. C50200
Exp. 6-30-11
CIVIL
STATE OF CALIFORNIA

The State of California or its officers or agents shall not be responsible for the accuracy or completeness of electronic copies of this plan sheet.

To accompany plans dated 11-07-11

NOTES:

1. When necessary to place dike in front of face of guard railing, only Type C dike may be used. For dike details, see Standard Plan A87B.
2. For standard railing post embedment, see Standard Plans A77C3.
3. Guard railing delineation to be used where shown on the Project Plans.
4. When dike or curb is placed under guard railing, the maximum height of the dike or curb shall be 4". Mountable dike should not be used. For dike and curb details, see Standard Plans A87A and A87B.
5. For details of typical distance between the face of rail and hinge point, see Standard Plan A77C3.
6. For steel line posts, use 1/4 - 20 self-tapping screws in 0.22" diameter holes or 1/4" bolts in 9/32" diameter holes.

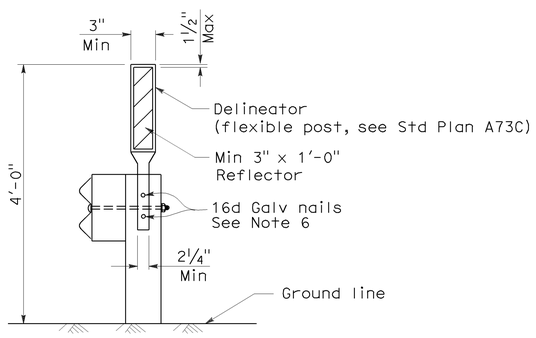

GUARD RAILING DELINEATION

See Note 3

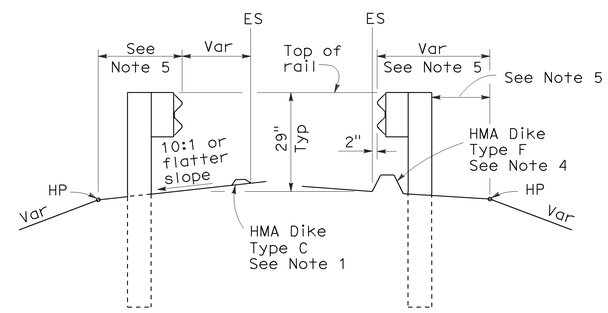

DIKE POSITIONING

See Note 1

STATE OF CALIFORNIA
DEPARTMENT OF TRANSPORTATION

METAL BEAM GUARD RAILING TYPICAL RAILING DELINEATION AND DIKE POSITIONING DETAILS

NO SCALE

RSP A77C4 DATED MAY 20, 2011 SUPERSEDES RSP A77C4 DATED JUNE 6, 2008 AND STANDARD PLAN A77C4 DATED MAY 1, 2006 - PAGE 47 OF THE STANDARD PLANS BOOK DATED MAY 2006.

REVISED STANDARD PLAN RSP A77C4

2006 REVISED STANDARD PLAN RSP A77C4

3-10-11

DIST	COUNTY	ROUTE	POST MILES TOTAL PROJECT	SHEET NO.	TOTAL SHEETS
08	SBd	40	R28.1/R51.0	27	49

Randell D. Hiatt
REGISTERED CIVIL ENGINEER

June 6, 2008
PLANS APPROVAL DATE

REGISTERED PROFESSIONAL ENGINEER
Randell D. Hiatt
No. C50200
Exp. 6-30-09
CIVIL
STATE OF CALIFORNIA

The State of California or its officers or agents shall not be responsible for the accuracy or completeness of electronic copies of this plan sheet.

To accompany plans dated 11-07-11

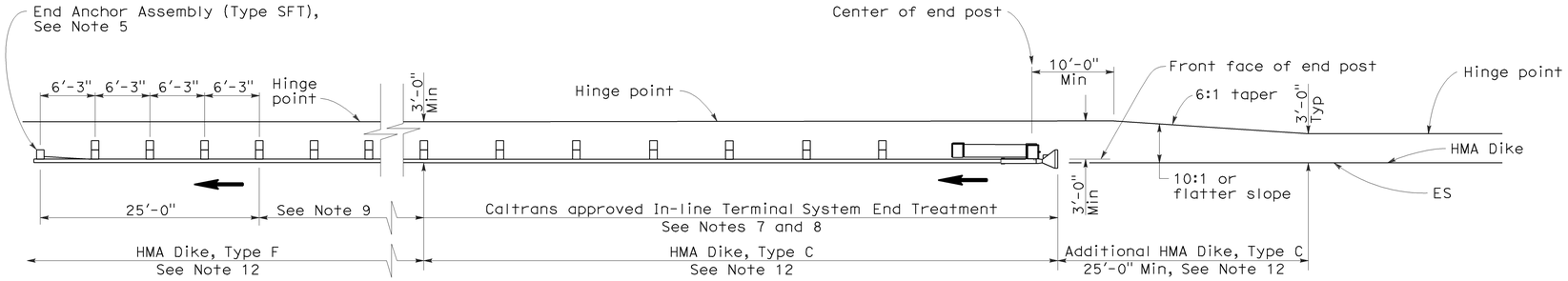

TYPE 11A LAYOUT

(EMBANKMENT GUARD INSTALLATION WITH IN-LINE END TREATMENT AT TRAFFIC APPROACH END OF RAILING)
See Note 6

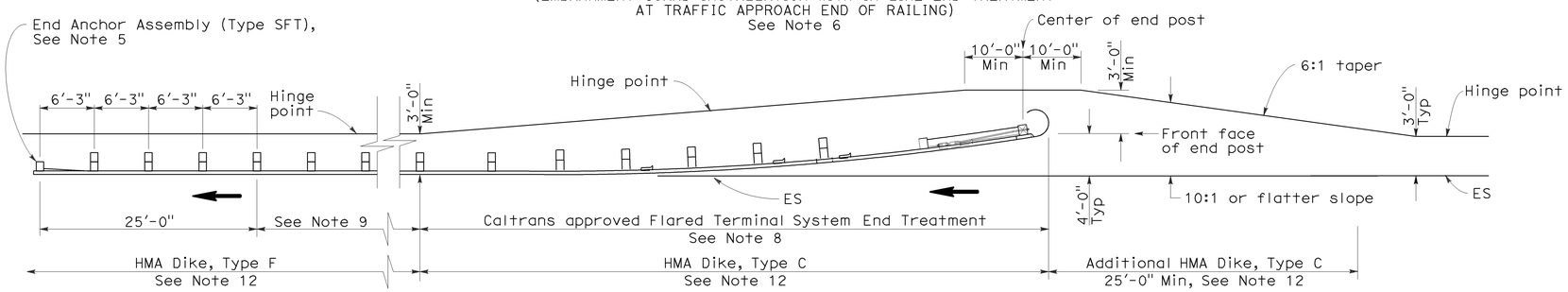

TYPE 11B LAYOUT

(EMBANKMENT GUARD RAILING INSTALLATION WITH FLARED END TREATMENT AT TRAFFIC APPROACH END OF RAILING)
See Note 6

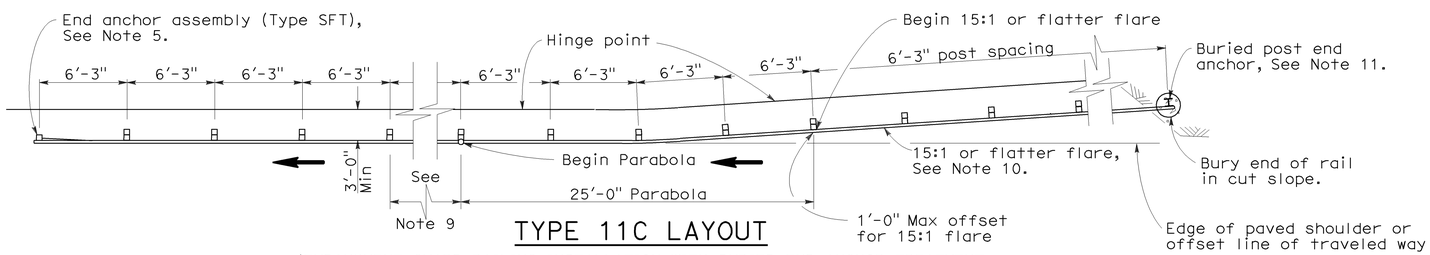

TYPE 11C LAYOUT

(EMBANKMENT GUARD RAILING INSTALLATION WITH BURIED END ANCHOR TREATMENT AT TRAFFIC APPROACH END OF RAILING)
See Notes 6 and 12

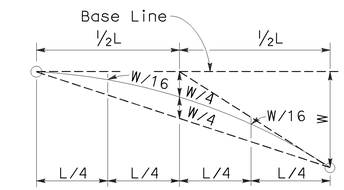

TYPICAL PARABOLIC LAYOUT

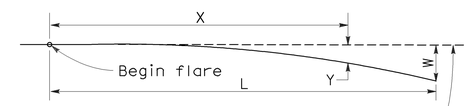

Base Line (Edge of paved shoulder or offset line of edge of traveled way)

$$Y = \frac{WX^2}{L^2}$$

Y = Offset from base line
W = Maximum offset
X = Distance along base line
L = Length of flare

PARABOLIC FLARE OFFSETS

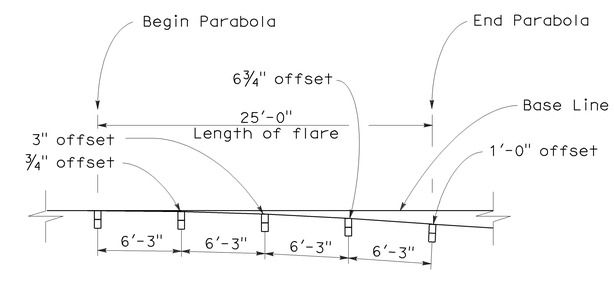

TYPICAL FLARE OFFSETS FOR 1 FOOT MAX END OFFSET

NOTES:

1. Line post, blocks and hardware to be used are shown on Standard Plans A77A1, A77A2, A77B1, A77C1, and A77C2.
2. Guard rail post spacing to be 6'-3" center to center, except as otherwise noted.
3. Except as noted, line posts are 6" x 8" x 6'-0" wood with 6" x 8" x 1'-2" wood blocks. W6 x 9 steel posts, 6'-0" in length, with 6" x 8" x 1'-2" notched wood blocks or recycled plastic blocks may be used for 6" x 8" x 6'-0" wood post with 6" x 8" x 1'-2" wood blocks where applicable and when specified.
4. Direction of adjacent traffic indicated by ⟶.
5. For End Anchor Assembly (Type SFT) details, see Standard Plan A77H1.
6. Layout Types 11A, 11B or 11C are typically used where guard railing is recommended to shield embankment slopes and a crashworthy end treatment is required for only one direction of traffic.
7. In-line Terminal System End Treatments are used where site conditions will not accommodate a flared end treatment.
8. The type of terminal system end treatment to be used will be shown on the Project Plans.
9. Dependent on site conditions (embankment height and side slope), construction of additional guard railing (length equal to multiples of 12'-6" with 6'-3" post spacing) may be advisable.
10. The 15:1 or flatter flare used with buried end anchors is based on the edge of the paved shoulder or offset line of edge of the traveled way. The length of guard railing within the 15:1 or flatter flare is based on site conditions and should be a length equal to multiples of 12'-6".
11. For details of the buried post end anchor used with Type 11C Layout, see Standard Plan A77I2.
12. Where placement of dike is required with guard railing installations, see Revised Standard Plan RSP A77C4 for dike positioning details.

STATE OF CALIFORNIA
DEPARTMENT OF TRANSPORTATION

METAL BEAM GUARD RAILING TYPICAL LAYOUTS FOR EMBANKMENTS

NO SCALE

RSP A77E1 DATED JUNE 6, 2008 SUPERSEDES STANDARD PLAN A77E1
DATED MAY 1, 2006 - PAGE 48 OF THE STANDARD PLANS BOOK DATED MAY 2006.

REVISED STANDARD PLAN RSP A77E1

2006 REVISED STANDARD PLAN RSP A77E1

12-10-07

DIST	COUNTY	ROUTE	POST MILES TOTAL PROJECT	SHEET NO.	TOTAL SHEETS
08	SBd	40	R28.1/R51.0	28	49

Randell D. Hiatt
REGISTERED CIVIL ENGINEER

June 6, 2008
PLANS APPROVAL DATE

REGISTERED PROFESSIONAL ENGINEER
Randell D. Hiatt
No. C50200
Exp. 6-30-09
CIVIL
STATE OF CALIFORNIA

The State of California or its officers or agents shall not be responsible for the accuracy or completeness of electronic copies of this plan sheet.

To accompany plans dated 11-07-11

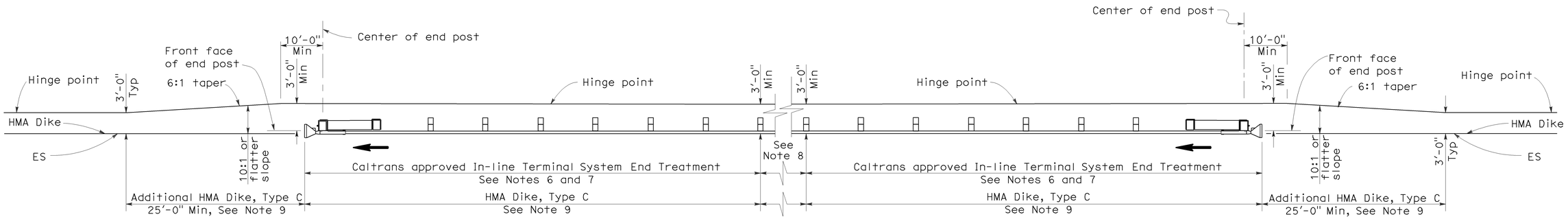

TYPE 11D LAYOUT

(EMBANKMENT GUARD RAILING INSTALLATION WITH IN-LINE END TREATMENT AT EACH END OF RAILING)
See Note 5

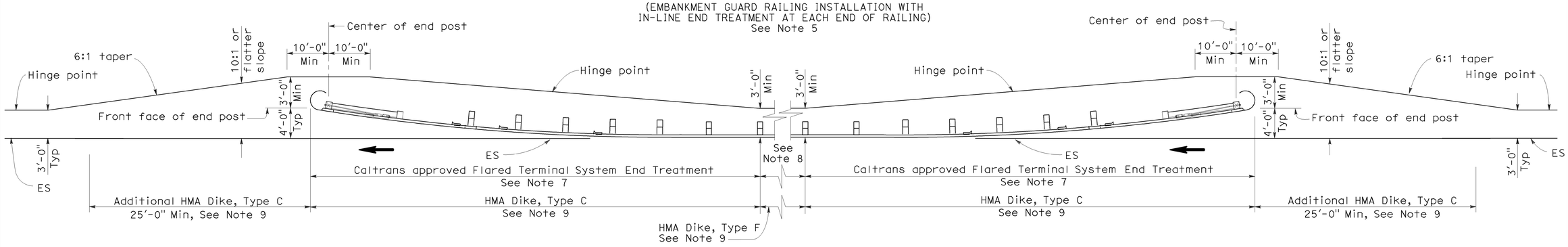

TYPE 11E LAYOUT

(EMBANKMENT GUARD RAILING INSTALLATION WITH FLARED END TREATMENT AT EACH END OF RAILING)
See Note 5

NOTES:

1. Line post, blocks and hardware to be used are shown on Standard Plans A77A1, A77A2, A77B1, A77C1 and A77C2.
2. Guard rail post spacing to be 6'-3" center to center, except as otherwise noted.
3. Except as noted, line posts are 6" x 8" x 6'-0" wood with 6" x 8" x 1'-2" wood blocks. W6 x 9 steel posts, 6'-0" in length, with 6" x 8" x 1'-2" notched wood blocks or plastic blocks may be used for 6" x 8" x 6'-0" wood post with 6" x 8" x 1'-2" wood blocks where applicable and when specified.
4. Direction of adjacent traffic indicated by ⟶.
5. Layout Types 11D through 11L, shown on the A77E Series of Revised Standard Plans, are typically used where guard railing is recommended to shield embankment slopes and a crashworthy end treatment is required for both directions of traffic.
6. In-line Terminal System End Treatments are used where site conditions will not accommodate a flared end treatment.
7. The type of terminal system end treatment to be used will be shown on the Project Plans.
8. Dependent on site conditions (embankment height and side slope), construction of additional guard railing (length equal to multiples of 12'-6" with 6'-3" post spacing) may be advisable.
9. Where placement of dike is required with guard railing installations, see Revised Standard Plan RSP A77C4 for dike positioning details.

STATE OF CALIFORNIA
DEPARTMENT OF TRANSPORTATION

METAL BEAM GUARD RAILING TYPICAL LAYOUTS FOR EMBANKMENTS

NO SCALE

RSP A77E2 DATED JUNE 6, 2008 SUPERSEDES STANDARD PLAN A77E2
DATED MAY 1, 2006 - PAGE 49 OF THE STANDARD PLANS BOOK DATED MAY 2006.

REVISED STANDARD PLAN RSP A77E2

2006 REVISED STANDARD PLAN RSP A77E2

12-10-07

DIST	COUNTY	ROUTE	POST MILES TOTAL PROJECT	SHEET NO.	TOTAL SHEETS
08	SBd	40	R28.1/R51.0	29	49

Randell D. Hiatt
REGISTERED CIVIL ENGINEER

June 6, 2008
PLANS APPROVAL DATE

REGISTERED PROFESSIONAL ENGINEER
Randell D. Hiatt
No. C50200
Exp. 6-30-09
CIVIL
STATE OF CALIFORNIA

The State of California or its officers or agents shall not be responsible for the accuracy or completeness of electronic copies of this plan sheet.

To accompany plans dated 11-07-11

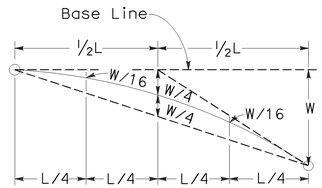

TYPICAL PARABOLIC LAYOUT

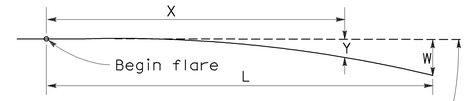

Base Line (Edge of paved shoulder or offset line of edge of traveled way)

$$Y = \frac{WX^2}{L^2}$$

Y = Offset from base line
W = Maximum offset
X = Distance along base line
L = Length of flare

PARABOLIC FLARE OFFSETS

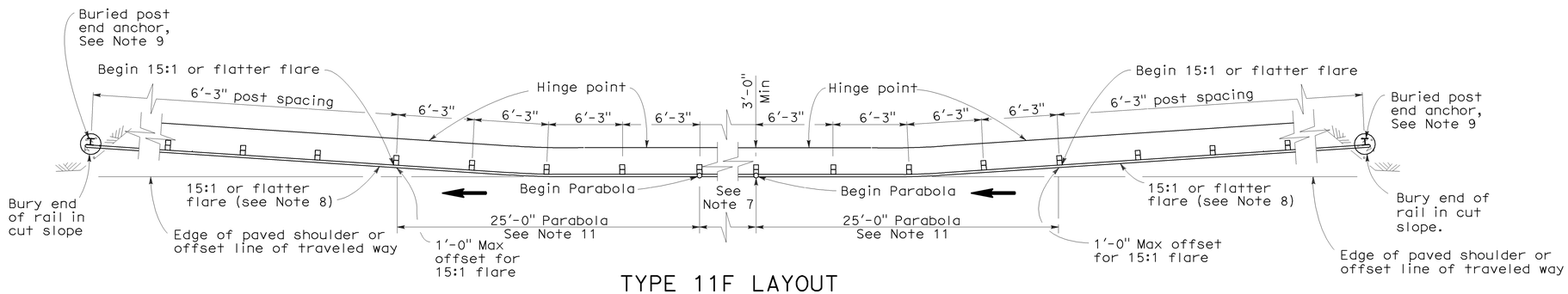

TYPE 11F LAYOUT

(EMBANKMENT GUARD RAILING INSTALLATION WITH A BURIED END ANCHOR TREATMENT AT EACH END OF RAILING)
See Notes 5 and 10

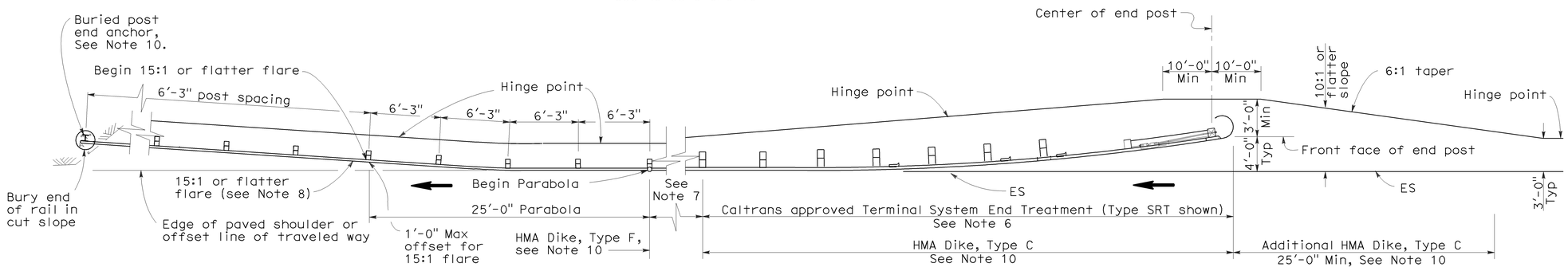

TYPE 11G LAYOUT

(EMBANKMENT GUARD RAILING INSTALLATION WITH FLARED END TREATMENT AND A BURIED END ANCHOR TREATMENT AT THE ENDS OF RAILING)
See Notes 5 and 10

NOTES:

1. Line post, blocks and hardware to be used are shown on Standard Plans A77A1, A77A2, A77B1, A77C1 and A77C2.
2. Guard rail post spacing to be 6'-3" center to center, except as otherwise noted.
3. Except as noted, line posts are 6" x 8" x 6'-0" wood with 6" x 8" x 1'-2" wood blocks. W6 x 9 steel posts, 6'-0" in length, with 6" x 8" x 1'-2" notched wood blocks or plastic blocks may be used for 6" x 8" x 6'-0" wood post with 6" x 8" x 1'-2" wood blocks where applicable and when specified.
4. Direction of adjacent traffic indicated by ⟶.
5. Layout Types 11D through 11L, shown on the A77E Series of Revised Standard Plans, are typically used where guard railing is recommended to shield embankment slopes and a crashworthy end treatment is required for both directions of traffic.
6. The type of terminal system end treatment to be used will be shown on the Project Plans.
7. Dependent on site conditions (embankment height and side slope), construction of additional guard railing (length equal to multiples of 12'-6" with 6'-3" post spacing) may be advisable.
8. The 15:1 or flatter flare used with buried end anchors is based on the edge of the paved shoulder or offset line of edge of the traveled way. The length of guard railing within the 15:1 or flatter flare is based on site conditions and should be a length equal to multiples of 12'-6".
9. For details of the buried post end anchor used with Type 11F and 11G Layouts, see Standard Plan A77I2.
10. Where placement of dike is required with guard railing installations, see Revised Standard Plan RSP A77C4 for dike positioning details.
11. For typical flare offsets for 25'-0" length parabola with maximum offset of 1'-0", see Revised Standard Plan RSP A77E1.

STATE OF CALIFORNIA
DEPARTMENT OF TRANSPORTATION

METAL BEAM GUARD RAILING TYPICAL LAYOUTS FOR EMBANKMENTS

NO SCALE

RSP A77E3 DATED JUNE 6, 2008 SUPERSEDES STANDARD PLAN A77E3
DATED MAY 1, 2006 - PAGE 50 OF THE STANDARD PLANS BOOK DATED MAY 2006.

REVISED STANDARD PLAN RSP A77E3

2006 REVISED STANDARD PLAN RSP A77E3

12-10-07

DIST	COUNTY	ROUTE	POST MILES TOTAL PROJECT	SHEET NO.	TOTAL SHEETS
08	SBd	40	R28.1/R51.0	30	49

Randell D. Hiatt
REGISTERED CIVIL ENGINEER

June 6, 2008
PLANS APPROVAL DATE

REGISTERED PROFESSIONAL ENGINEER
Randell D. Hiatt
No. C50200
Exp. 6-30-09
CIVIL
STATE OF CALIFORNIA

The State of California or its officers or agents shall not be responsible for the accuracy or completeness of electronic copies of this plan sheet.

To accompany plans dated 11-07-11

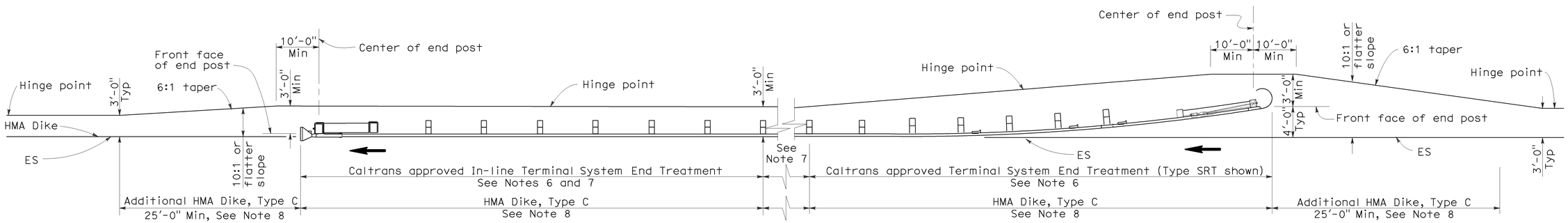

TYPE 11H LAYOUT

(EMBANKMENT GUARD RAILING INSTALLATION WITH FLARED END TREATMENT
AND AN IN-LINE TREATMENT AT THE ENDS OF RAILING)
See Notes 5 and 8

NOTES:

1. Line post, blocks and hardware to be used are shown on Standard Plans A77A1, A77A2, A77B1, A77C1 and A77C2.
2. Guard rail post spacing to be 6'-3" center to center, except as otherwise noted.
3. Except as noted, line posts are 6" x 8" x 6'-0" wood with 6" x 8" x 1'-2" wood blocks. W6 x 9 steel posts, 6'-0" in length, with 6" x 8" x 1'-2" notched wood blocks or plastic blocks may be used for 6" x 8" x 6'-0" wood post with 6" x 8" x 1'-2" wood blocks where applicable and when specified.
4. Direction of adjacent traffic indicated by ➡.
5. Layout Types 11D through 11L, shown on the A77E Series of Revised Standard Plans, are typically used where guard railing is recommended to shield embankment slopes and a crashworthy end treatment is required for both directions of traffic.
6. The type of terminal system end treatment to be used will be shown on the Project Plans.
7. Dependent on site conditions (embankment height and side slope), construction of additional guard railing (length equal to multiples of 12'-6" with 6'-3" post spacing) may be advisable.
8. Where placement of dike is required with guard railing installations, see Revised Standard Plan RSP A77C4 for dike positioning details.

STATE OF CALIFORNIA
DEPARTMENT OF TRANSPORTATION

METAL BEAM GUARD RAILING TYPICAL LAYOUTS FOR EMBANKMENTS

NO SCALE

RSP A77E4 DATED JUNE 6, 2008 SUPERSEDES STANDARD PLAN A77E4
DATED MAY 1, 2006 - PAGE 51 OF THE STANDARD PLANS BOOK DATED MAY 2006.

REVISED STANDARD PLAN RSP A77E4

2006 REVISED STANDARD PLAN RSP A77E4

12-10-07

DIST	COUNTY	ROUTE	POST MILES TOTAL PROJECT	SHEET NO.	TOTAL SHEETS
08	SBd	40	R28.1/R51.0	31	49

Randell D. Hiatt
REGISTERED CIVIL ENGINEER

June 6, 2008
PLANS APPROVAL DATE

REGISTERED PROFESSIONAL ENGINEER
Randell D. Hiatt
No. C50200
Exp. 6-30-09
CIVIL
STATE OF CALIFORNIA

The State of California or its officers or agents shall not be responsible for the accuracy or completeness of electronic copies of this plan sheet.

To accompany plans dated 11-07-11

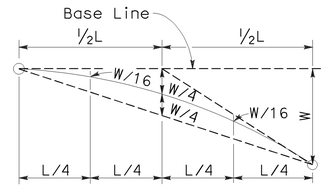

TYPICAL PARABOLIC LAYOUT

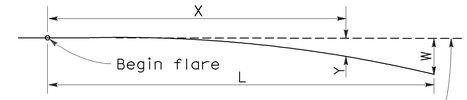

Base Line (Edge of paved shoulder or offset line of edge of traveled way)

$$Y = \frac{WX^2}{L^2}$$

Y = Offset from base line
W = Maximum offset
X = Distance along base line
L = Length of flare

PARABOLIC FLARE OFFSETS

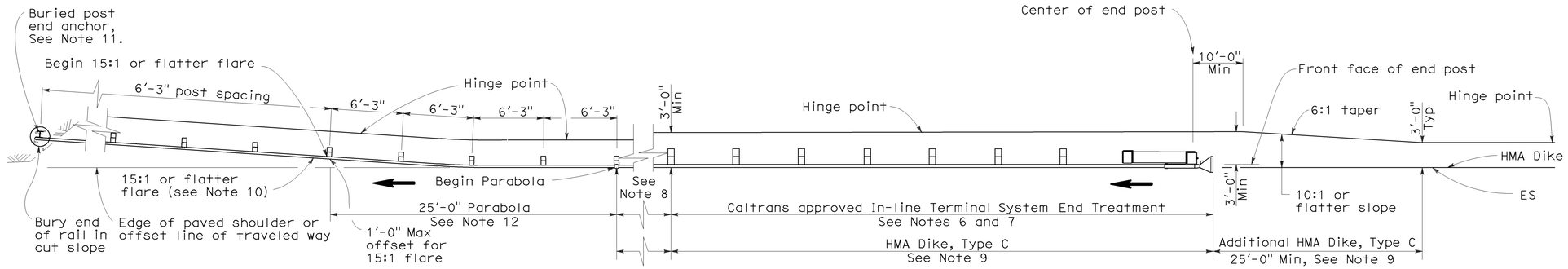

TYPE 11I LAYOUT

(EMBANKMENT GUARD RAILING INSTALLATION WITH IN-LINE END TREATMENT AND A BURIED END ANCHOR TREATMENT AT THE ENDS OF RAILING)
See Note 5

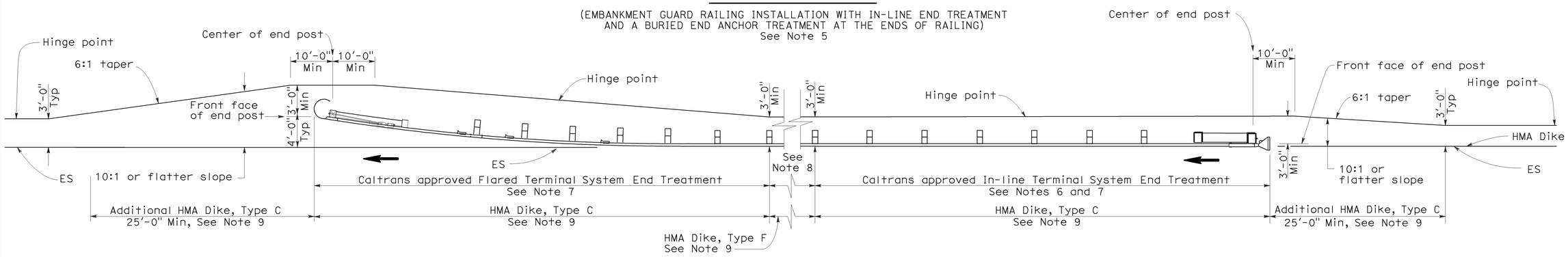

TYPE 11J LAYOUT

(EMBANKMENT GUARD RAILING INSTALLATION WITH IN-LINE END TREATMENT AND FLARED END TREATMENT AT THE ENDS OF RAILING)
See Note 5

NOTES:

1. Line post, blocks and hardware to be used are shown on Standard Plans A77A1, A77A2, A77B1, A77C1 and A77C2.
2. Guard rail post spacing to be 6'-3" center to center, except as otherwise noted.
3. Except as noted, line posts are 6" x 8" x 6'-0" wood with 6" x 8" x 1'-2" wood blocks. W6 x 9 steel posts, 6'-0" in length, with 6" x 8" x 1'-2" notched wood blocks or plastic blocks may be used for 6" x 8" x 6'-0" wood post with 6" x 8" x 1'-2" wood blocks where applicable and when specified.
4. Direction of adjacent traffic indicated by ⟶.
5. Layout Types 11D through 11L, shown on the A77E Series of Revised Standard Plans, are typically used where guard railing is recommended to shield embamkment slopes and a crashworthy end treatment is required for both directions of traffic.
6. In-line Terminal System End Treatments are used where site conditions will not accommodate a flared end treatment.
7. The type of terminal system end treatment to be used will be shown on the Project Plans.
8. Dependent on site conditions (embankment height and side slope), construction of additional guard railing (length equal to multiples of 12'-6" with 6'-3" post spacing) may be advisable.
9. Where placement of dike is required with guard railing installations, see Revised Standard Plan RSP A77C4 for dike positioning details.
10. The 15:1 or flatter flare used with buried end anchors is based on the edge of the paved shoulder or offset line of edge of the traveled way. The length of guard railing within the 15:1 or flatter flare is based on site conditions and should be a length equal to multiples of 12'-6".
11. For details of the buried post end anchor used with Type 11I Layout, see Standard Plan A77I2.
12. For typical flare offsets for 25'-0" length parabola with maximum offset of 1'-0", see Revised Standard Plan RSP A77E1.

STATE OF CALIFORNIA
DEPARTMENT OF TRANSPORTATION

METAL BEAM GUARD RAILING TYPICAL LAYOUTS FOR EMBANKMENTS

NO SCALE

RSP A77E5 DATED JUNE 6, 2008 SUPERSEDES STANDARD PLAN A77E5
DATED MAY 1, 2006 - PAGE 52 OF THE STANDARD PLANS BOOK DATED MAY 2006.

REVISED STANDARD PLAN RSP A77E5

2006 REVISED STANDARD PLAN RSP A77E5

12-10-07

DIST	COUNTY	ROUTE	POST MILES TOTAL PROJECT	SHEET NO.	TOTAL SHEETS
08	SBd	40	R28.1/R51.0	32	49

Randell D. Hiatt
REGISTERED CIVIL ENGINEER

June 6, 2008
PLANS APPROVAL DATE

REGISTERED PROFESSIONAL ENGINEER
Randell D. Hiatt
No. C50200
Exp. 6-30-09
CIVIL
STATE OF CALIFORNIA

The State of California or its officers or agents shall not be responsible for the accuracy or completeness of electronic copies of this plan sheet.

To accompany plans dated 11-07-11

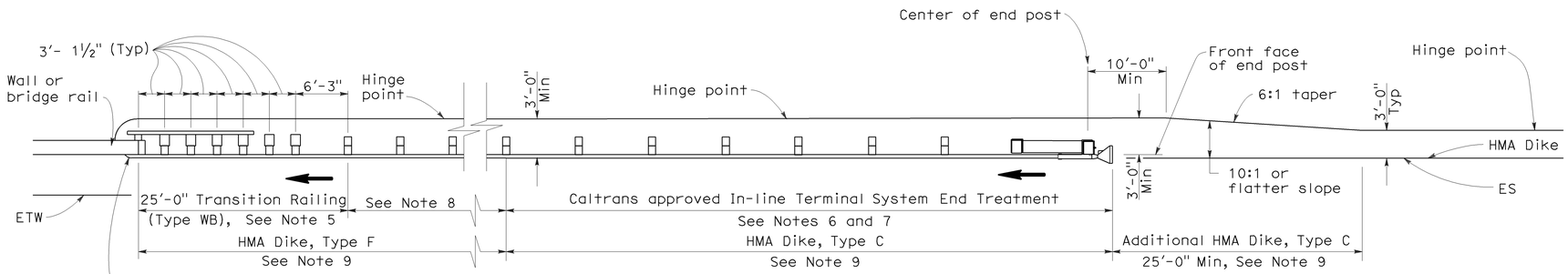

TYPE 12A LAYOUT

(GUARD RAILING INSTALLATION AT STRUCTURE APPROACH WITH AN IN-LINE END TREATMENT AT TRAFFIC APPROACH END OF RAILING)
See Notes 10

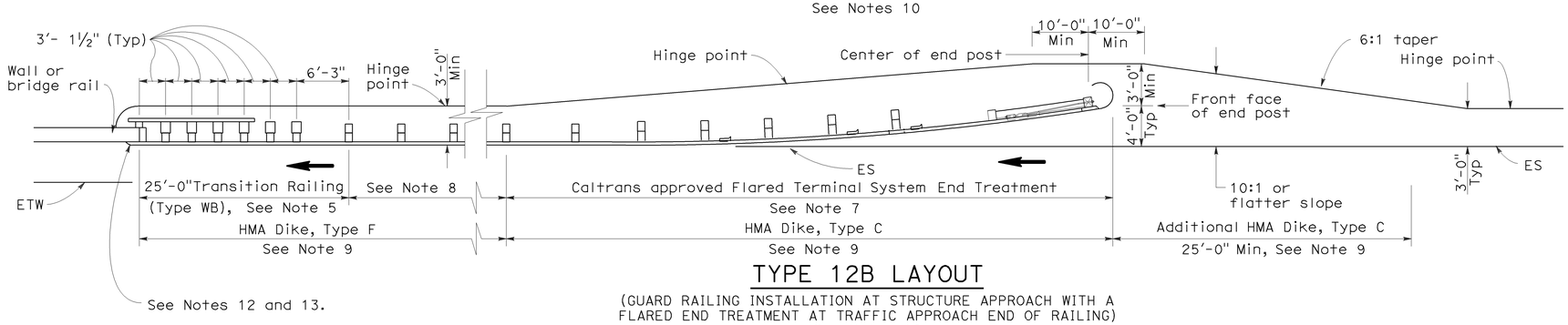

TYPE 12B LAYOUT

(GUARD RAILING INSTALLATION AT STRUCTURE APPROACH WITH A FLARED END TREATMENT AT TRAFFIC APPROACH END OF RAILING)
See Notes 10

NOTES:

1. Line post, blocks and hardware to be used are shown on Standard Plans A77A1, A77A2, A77B1, A77C1 and A77C2.
2. Guard rail post spacing to be 6'-3" center to center, except as otherwise noted.
3. Except as noted, line posts are 6" x 8" x 6'-0" wood with 6" x 8" x 1'-2" wood blocks. W6 x 9 steel posts, 6'-0" in length, with 6" x 8" x 1'-2" notched wood blocks or plastic blocks may be used for 6" x 8" x 6'-0" wood posts with 6" x 8" x 1'-2" wood blocks where applicable and when specified.
4. Direction of adjacent traffic indicated by ➡.
5. For Transition Railing (Type WB) details for Types 12A and 12B Layouts, see Standard Plan A77J4.
6. In-line Terminal System End Treatments are used where site conditions will not accommodate a flared end treatment.
7. The type of terminal system end treatment to be used will be shown on the Project Plans.
8. Dependent on site conditions (embankment height, side slopes, or other fixed objects), it may be advisable to construct additional guard railing (a length equal to multiples of 12'-6" with 6'-3" post spacing) between the transition railing and end treatment.
9. Where placement of dike is required with guard railing installations, see Revised Standard Plan RSP A77C4 for dike positioning details.
10. Type 12A or Type 12B Layouts are typically used:
    a. To the right of approaching traffic, at the end of a structure, on two-lane conventional highway where the roadbed width across the structure is less than 40 feet.
    b. To the left of approaching traffic, at the end of a structure, on two-lane conventional highway where the roadbed width across the structure is less than 40 feet.
    c. To the right of approaching traffic at the end of each structure on multilane freeways or expressways with separate adjacent or parallel bridges.
    d. To the right of approaching traffic at the end of the structure on multilane freeways or expressways with decked median on the bridge.
11. See Revised Standard Plan RSP A77F3 for typical layout used left of approaching traffic at the ends of each structure on multilane freeways or expressways with separate adjacent or parallel bridges.
12. For additional details of typical connections to bridge rail, see Connection Detail AA on Revised Standard Plans RSP A77J1 and RSP A77J2 and Connection Detail FF on Standard Plans A77K1 and A77K2.
13. For additional details of a typical connection to walls or abutments, see Standard Plan A77J3.

STATE OF CALIFORNIA
DEPARTMENT OF TRANSPORTATION

METAL BEAM GUARD RAILING TYPICAL LAYOUTS FOR STRUCTURE APPROACH

NO SCALE

RSP A77F1 DATED JUNE 6, 2008 SUPERSEDES STANDARD PLAN A77F1
DATED MAY 1, 2006 - PAGE 54 OF THE STANDARD PLANS BOOK DATED MAY 2006.

REVISED STANDARD PLAN RSP A77F1

2006 REVISED STANDARD PLAN RSP A77F1

12-10-07

Dist	COUNTY	ROUTE	POST MILES TOTAL PROJECT	SHEET No.	TOTAL SHEETS
08	SBd	40	R28.1/R51.0	33	49

Randell D. Hiatt
REGISTERED CIVIL ENGINEER

May 20, 2011
PLANS APPROVAL DATE

REGISTERED PROFESSIONAL ENGINEER
Randell D. Hiatt
No. C50200
Exp. 6-30-11
CIVIL
STATE OF CALIFORNIA

The State of California or its officers or agents shall not be responsible for the accuracy or completeness of electronic copies of this plan sheet.

To accompany plans dated 11-07-11

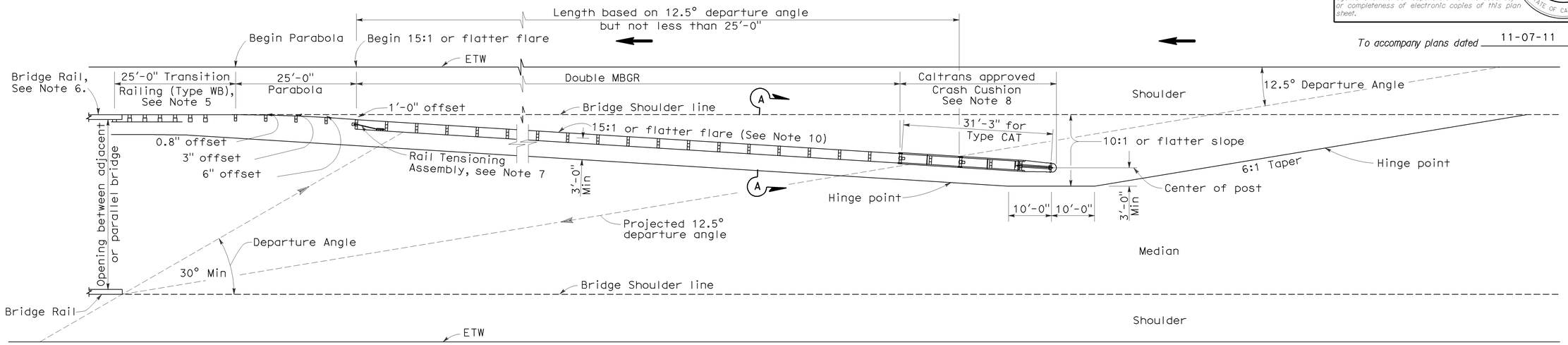

TYPE 12E LAYOUT

See Note 10

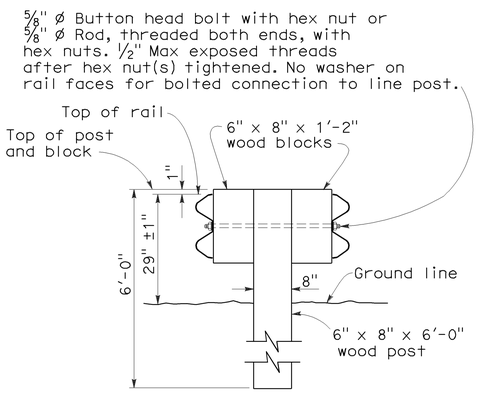

SECTION A-A

TYPICAL DOUBLE METAL BEAM GUARD RAILING

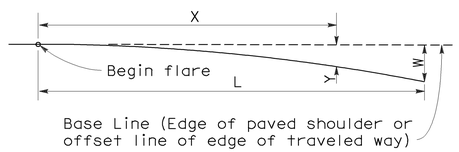

Base Line (Edge of paved shoulder or offset line of edge of traveled way)

$$Y = \frac{WX^2}{L^2}$$

Y = Offset from base line
W = Maximum offset
X = Distance along base line
L = Length of flare

PARABOLIC FLARE OFFSETS

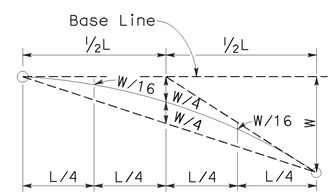

TYPICAL PARABOLIC LAYOUT

NOTES:

1. Line post, blocks and hardware to be used are shown on Standard Plans A77A1, A77A2, A77B1, A77C1 and A77C2.
2. Guard railing post spacing to be 6'-3" center to center, except as otherwise noted.
3. Except as noted, line posts are 6" x 8" x 6'-0" wood with 6" x 8" x 1'-2" wood blocks. W6 x 9 steel posts, 6'-0" in length, with 6" x 8" x 1'-2" notched wood blocks or notched recycled plastic blocks may be used for 6" x 8" x 6'-0" wood line posts with 6" x 8" x 1'-2" wood blocks where applicable and when specified.
4. Direction of adjacent traffic indicated by ⟶.
5. For Transition Railing (Type WB) details, see Standard Plan A77J4.
6. For additional details of a typical connection to bridge rail, see Connection Detail AA on Revised Standard Plan RSP A77J1.
7. For Rail Tensioning Assembly details, see Standard Plan A77H2.
8. The type of Crash Cushion to be used will be shown on the Project Plans.
9. Type 12E Layout is typically used left of approaching traffic at the end of each structure on multilane freeways or expressways where a median type barrier is not constructed between separated roadbeds.
10. The 15:1 or flatter flare is measured off of the edge of traveled way.

STATE OF CALIFORNIA
DEPARTMENT OF TRANSPORTATION

METAL BEAM GUARD RAILING TYPICAL LAYOUTS FOR STRUCTURE APPROACH

NO SCALE

RSP A77F3 DATED MAY 20, 2011 SUPERSEDES RSP A77F3 DATED JUNE 6, 2008 AND STANDARD PLAN A77F3 DATED MAY 1, 2006 - PAGE 56 OF THE STANDARD PLANS BOOK DATED MAY 2006.

REVISED STANDARD PLAN RSP A77F3

2006 REVISED STANDARD PLAN RSP A77F3

3-10-11

Dist	COUNTY	ROUTE	POST MILES TOTAL PROJECT	SHEET No.	TOTAL SHEETS
08	SBd	40	R28.1/R51.0	34	49

Randell D. Hiatt
REGISTERED CIVIL ENGINEER

May 20, 2011
PLANS APPROVAL DATE

REGISTERED PROFESSIONAL ENGINEER
Randell D. Hiatt
No. C50200
Exp. 6-30-11
CIVIL
STATE OF CALIFORNIA

The State of California or its officers or agents shall not be responsible for the accuracy or completeness of electronic copies of this plan sheet.

To accompany plans dated 11-07-11

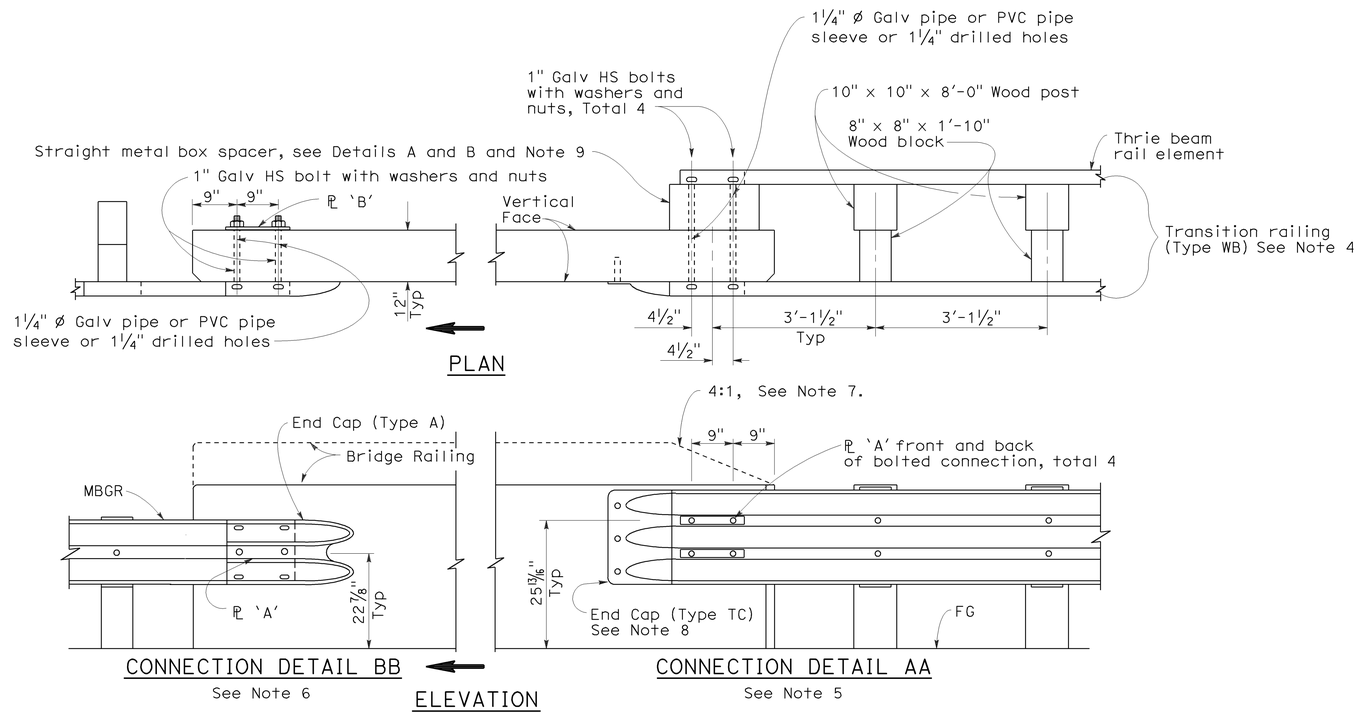

GUARD RAILING CONNECTION TO BRIDGE RAILING WITHOUT SIDEWALK

NOTES:

1. See Revised Standard Plan RSP A77J2 for additional connection details to bridges without sidewalks.
2. Additional details of posts, blocks and hardware are shown on Standard Plan A77B1, A77C1 and A77C2.
3. Direction of adjacent traffic indicated by ⟶.
4. For additional details of Transition Railing (Type WB), see Standard Plan A77J4. Transition Railing (Type WB) transitions the 12 gage w-beam standard railing section of guard railing to a heavier gage nested thrie beam railing section which is connected to the concrete bridge railing.
5. For typical use of Connection Detail AA, see Layout Types 12A and 12B on Revised Standard Plan RSP A77F1, Layout Types 12C and 12D on Standard Plan A77F2, and Layout Type 12E on Revised Standard Plan RSP A77F3.
6. For typical use of Connection Detail BB, see Layout Type 12D (structure departure railing connection) on Standard Plan A77F2 and Layout Type 12DD on Standard Plan A77F5.
7. Where the height of the bridge railing exceeds the height of the thrie beam railing by more than 1" at Connection Detail AA, taper the top of the end of the bridge railing at 4:1 to match the top elevation of the thrie beam rail.
8. For details of End Cap (Type TC), see Standard Plan A77J4.
9. See Standard Plan A77J4 for additional details regarding depth dimension for straight metal box spacer.

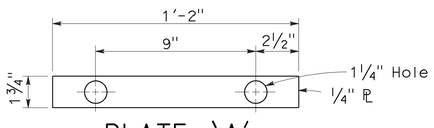

PLATE 'A'

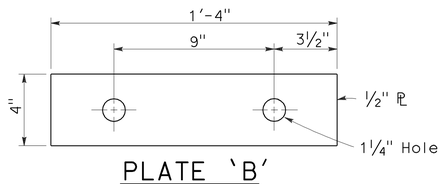

PLATE 'B'
(For backside of connection BB)

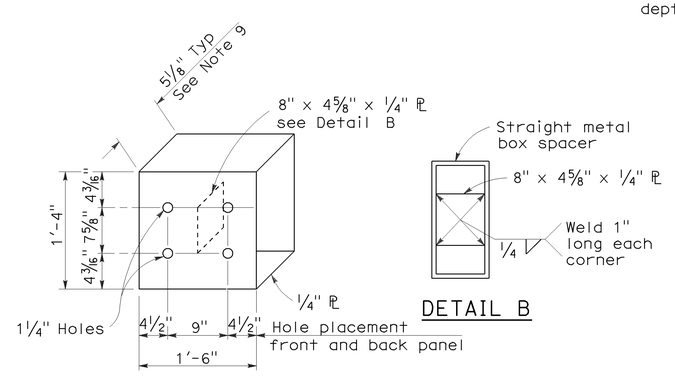

DETAIL A

DETAIL B

STRAIGHT METAL BOX SPACER

STATE OF CALIFORNIA
DEPARTMENT OF TRANSPORTATION

METAL BEAM GUARD RAILING CONNECTIONS TO BRIDGE RAILINGS WITHOUT SIDEWALKS DETAILS No.1

NO SCALE

RSP A77J1 DATED MAY 20, 2011 SUPERSEDES RSP A77J1 DATED JUNE 6, 2008 AND STANDARD PLAN A77J1 DATED MAY 1, 2006 - PAGE 72 OF THE STANDARD PLANS BOOK DATED MAY 2006.

REVISED STANDARD PLAN RSP A77J1

2006 REVISED STANDARD PLAN RSP A77J1

3-10-11

DIST	COUNTY	ROUTE	POST MILES TOTAL PROJECT	SHEET NO.	TOTAL SHEETS
08	SBd	40	R28.1/R51.0	35	49

Randell D. Hiatt
REGISTERED CIVIL ENGINEER

June 6, 2008
PLANS APPROVAL DATE

REGISTERED PROFESSIONAL ENGINEER
Randell D. Hiatt
No. C50200
Exp. 6-30-09
CIVIL
STATE OF CALIFORNIA

The State of California or its officers or agents shall not be responsible for the accuracy or completeness of electronic copies of this plan sheet.

To accompany plans dated 11-07-11

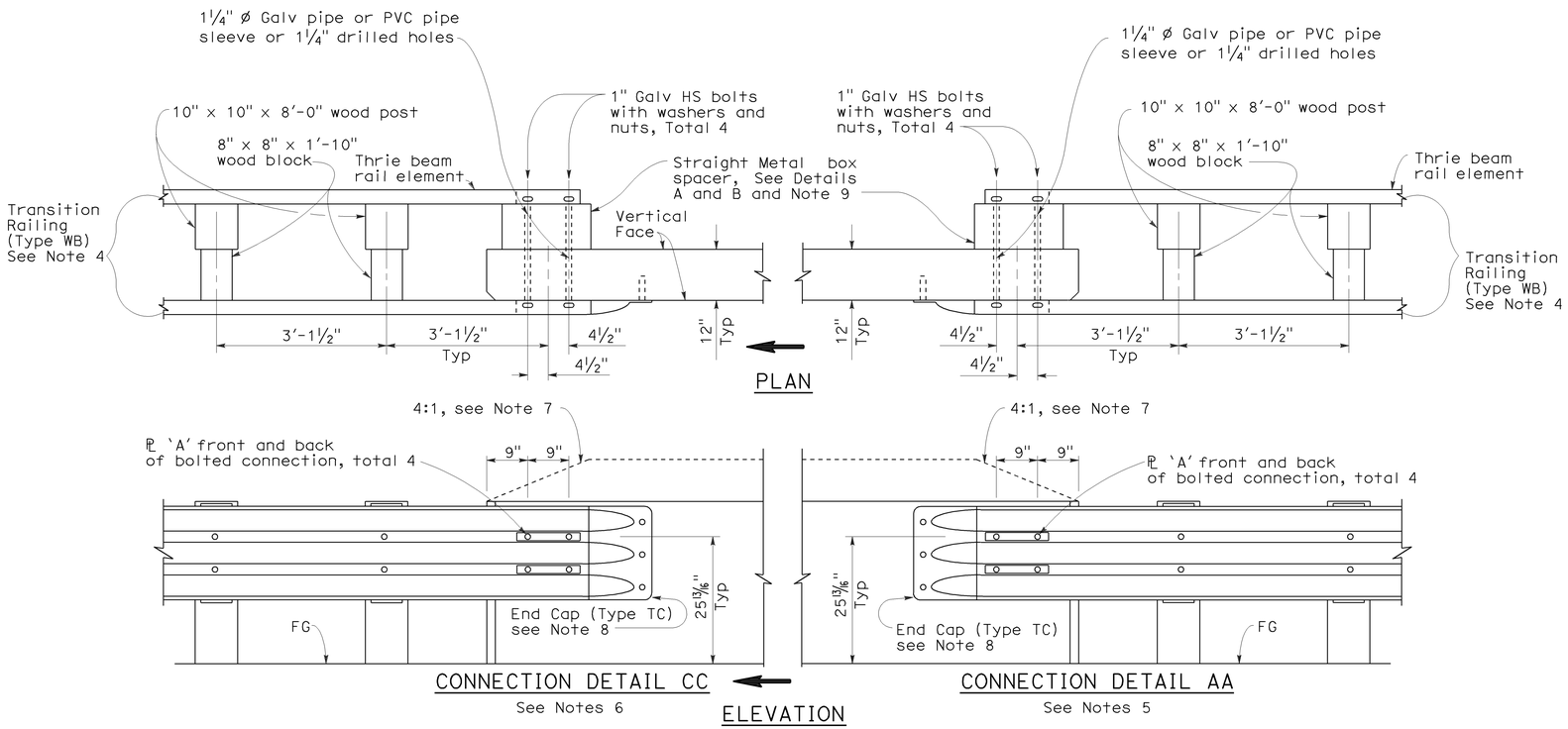

GUARD RAILING CONNECTION TO BRIDGE RAILING WITHOUT SIDEWALK

NOTES:

1. See Revised Standard Plan RSP A77J1 for additional connection details to bridges without sidewalks.
2. Additional details of posts, blocks and hardware are shown on Standard Plan A77B1, A77C1 and A77C2.
3. Direction of adjacent traffic indicated by ⟹.
4. For additional details of Transition Railing (Type WB), see Standard Plan A77J4. Transition Railing (Type WB) transitions the 12 gage w-beam standard railing section of guard railing to a heavier gage nested thrie beam railing section which is connected to the concrete bridge railing.
5. For typical use of Connection Detail AA, see Layout Types 12A and 12B on Revised Standard Plan RSP A77F1, Layout Types 12C and 12D on Standard Plan A77F2, and Layout Type 12E on Revised Standard Plan RSP A77F3.
6. For typical use of Connection Detail CC, see Layout Types 12AA and 12BB on Standard Plan A77F4 and Layout Type 12CC on Standard Plan A77F5.
7. Where the height of the bridge railing exceeds the height of the thrie beam railing by more than 1" at Connection Detail AA and connection Detail CC, taper the top of the end of the bridge railing at 4:1 to match the top elevation of the thrie beam railing.
8. For details of End Cap (Type TC), see Standard Plans A77J4.
9. See Standard Plans A77J4 for additional details regarding depth dimension for straight metal box spacer.

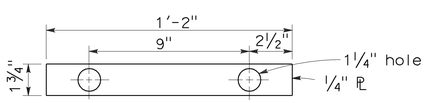

PLATE 'A'

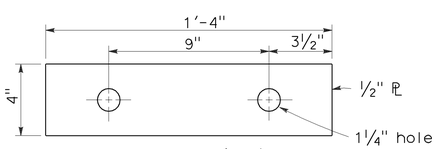

PLATE 'B'
(For backside of connection BB)

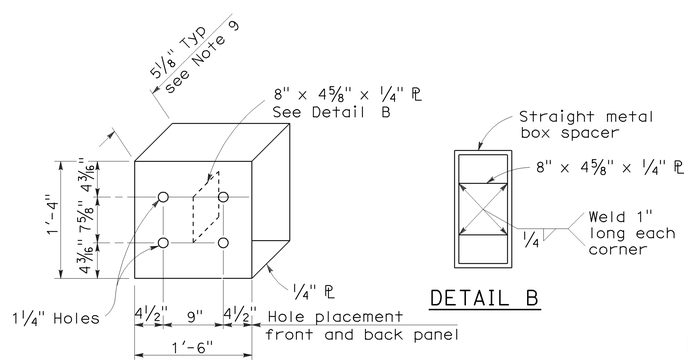

DETAIL A

STRAIGHT METAL BOX SPACER

DETAIL B

STATE OF CALIFORNIA
DEPARTMENT OF TRANSPORTATION

METAL BEAM GUARD RAILING CONNECTIONS TO BRIDGE RAILINGS WITHOUT SIDEWALKS DETAILS No.2

NO SCALE

RSP A77J2 DATED JUNE 6, 2008 SUPERSEDES STANDARD PLAN A77J2
DATED MAY 1, 2006 - PAGE 73 OF THE STANDARD PLANS BOOK DATED MAY 2006.

REVISED STANDARD PLAN RSP A77J2

2006 REVISED STANDARD PLAN RSP A77J2

12-10-07

Dist	COUNTY	ROUTE	POST MILES TOTAL PROJECT	SHEET No.	TOTAL SHEETS
08	SBd	40	R28.1/R51.0	36	49

Randell D. Hiatt
REGISTERED CIVIL ENGINEER

May 20, 2011
PLANS APPROVAL DATE

REGISTERED PROFESSIONAL ENGINEER
Randell D. Hiatt
No. C50200
Exp. 6-30-11
CIVIL
STATE OF CALIFORNIA

The State of California or its officers or agents shall not be responsible for the accuracy or completeness of electronic copies of this plan sheet.

To accompany plans dated 11-07-11

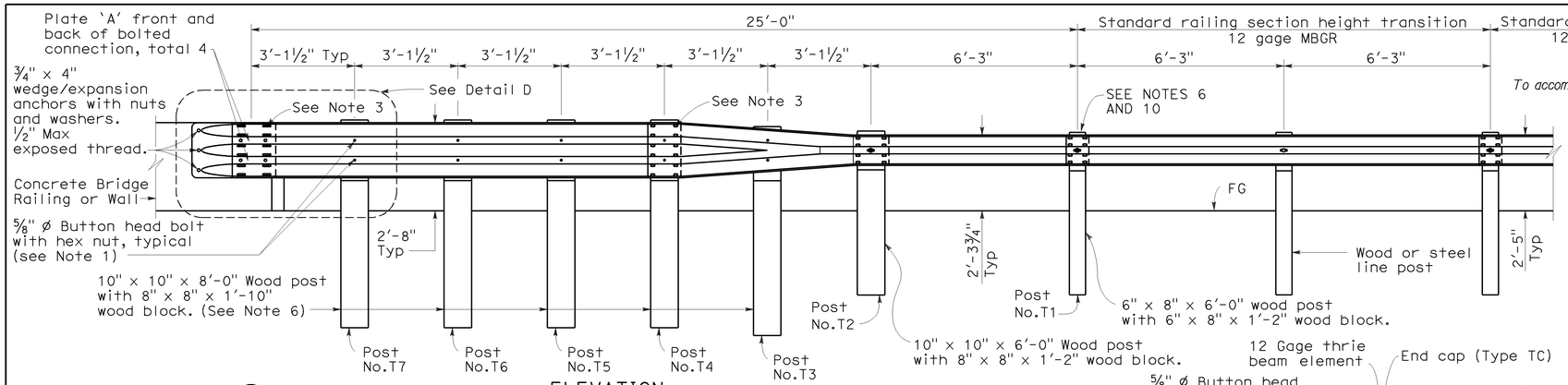

ELEVATION

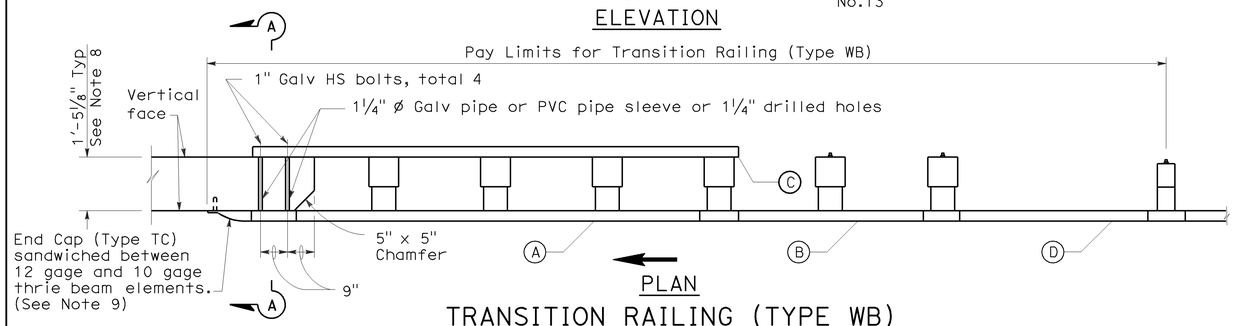

PLAN

TRANSITION RAILING (TYPE WB)

(No Blockout Attachment)

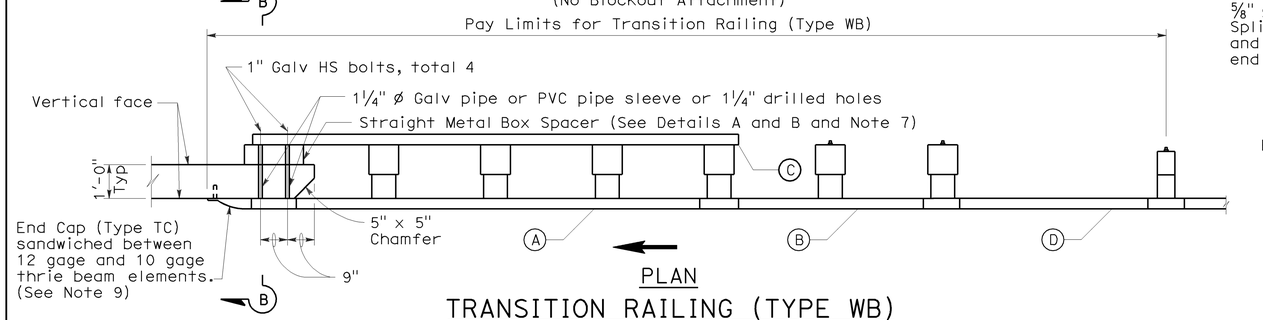

PLAN

TRANSITION RAILING (TYPE WB)

(Blockout Attachment)

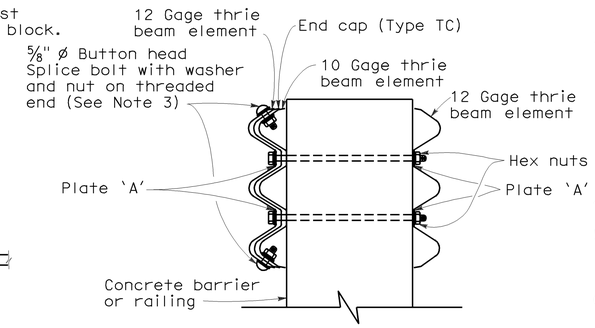

SECTION A-A

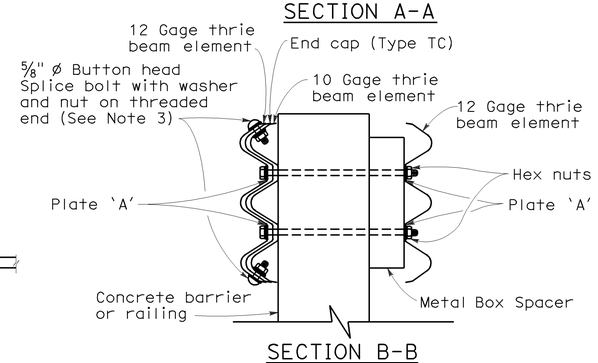

SECTION B-B

LEGEND

(A) Nested thrie beam elements (one 12 gage element nested over one 10 gage element).

(B) One 10 gage "W" beam to thrie beam element.

(C) One 12 gage thrie beam element.

(D) One 10 gage "W" beam rail element (7'-3½" length)

10 gage = 0.135" thick

12 gage = 0.108" thick

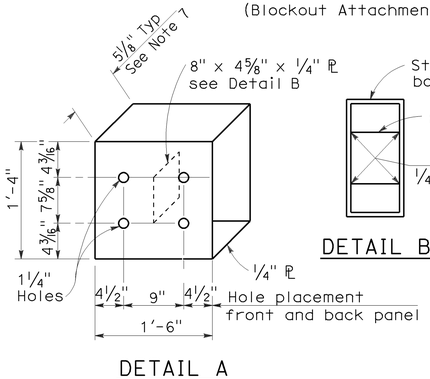

DETAIL A

STRAIGHT METAL BOX SPACER

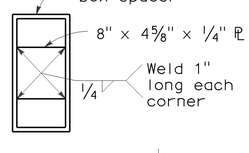

DETAIL B

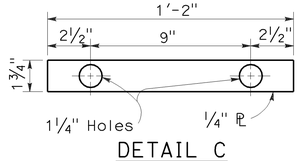

DETAIL C

PLATE 'A'

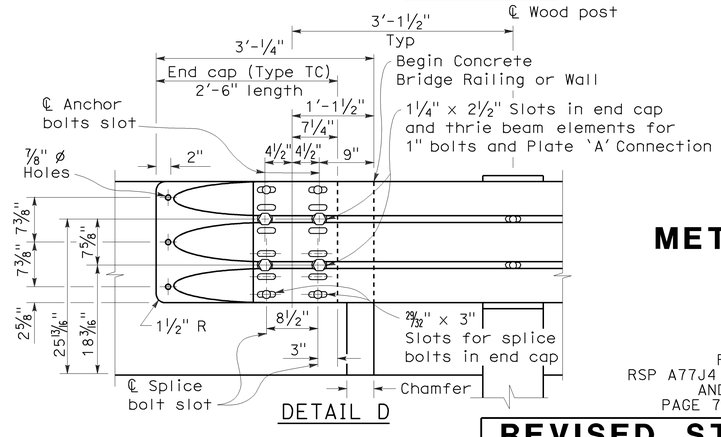

DETAIL D

NOTES:

1. Use ⅝" ø Button head bolts and hex nuts for connections to posts. No washer on rail face for bolted connections to post.
2. The nested rail elements, end cap, and 'W' beam to thrie beam element may be spliced together prior to bolting the elements to the wood post and concrete barrier or railing.
3. Exterior splice bolt holes for rail element splices at Post No. T4 and the connection to the concrete barrier or railing shall be the standard 29/32" x 1⅛" slot size. Interior splice bolt holes at these locations may be increased up to 1¼" ø. Only the top 2 and the bottom 2 splice bolts with washers and nuts are required for rail splices at Post No. T4 and the connection to the concrete barrier or railing.
4. Direction of adjacent traffic indicated by ➡ .
5. The top elevation of Posts No. T2 through No. T7 shall not project more than 1" above the top elevation of the rail element.
6. Typically, the railing connected to Transition Railing (Type WB) will be either standard railing section of metal beam guard railing with height transition ratio of 120:1 or an approved Caltrans end treatment attached to Post No. T1.
7. The depth of the metal box spacer varies from the 5⅛" to 1½" and is dependent on the width of the concrete railing or wall. The combined dimension for the depth of the metal box spacer plus the width of railing or wall is typically 17⅛". Where the space between the backside of the concrete railing or wall and the rear thrie beam element is less than 1½", metal plates similar to Plate 'A' are to be used as spacers.
8. Where the width of the concrete railing or wall is greater than 17⅛", wood blocks are to be used to fill the space created between the backside of Posts No. T4 through No. T7 and the rear thrie beam element. These wood blocks shall be 8" in width and 1'-2" in length. The dimension between the front thrie beam element and the rear thrie beam element is to match the width of the concrete railing or wall.
9. End cap may be installed over 12 gage and 10 gage thrie beam elements where transition railing is installed on the departure end of bridge railing.
10. Conform standard railing section height to 2'-3¾" at Post No. T1 using height transition ratio of 120:1.

STATE OF CALIFORNIA
DEPARTMENT OF TRANSPORTATION

METAL BEAM GUARD RAILING TRANSITION RAILING (TYPE WB)

NO SCALE

RSP A77J4 DATED MAY 20, 2011 SUPERSEDES
RSP A77J4 DATED JUNE 5, 2009, RSP A77J4 DATED JUNE 6, 2008
AND STANDARD PLAN A77J4 DATED MAY 1, 2006 -
PAGE 75 OF THE STANDARD PLANS BOOK DATED MAY 2006.

REVISED STANDARD PLAN RSP A77J4

2006 REVISED STANDARD PLAN RSP A77J4

5-14-09

DIST	COUNTY	ROUTE	POST MILES TOTAL PROJECT	SHEET NO.	TOTAL SHEETS
08	SBd	40	R28.1/R51.0	37	49

REGISTERED CIVIL ENGINEER

September 1, 2006
PLANS APPROVAL DATE

REGISTERED PROFESSIONAL ENGINEER Hector David Cordova No. C41957 Exp. 3-31-08 CIVIL STATE OF CALIFORNIA

The State of California or its officers or agents shall not be responsible for the accuracy or completeness of electronic copies of this plan sheet.

To accompany plans dated 11-07-11

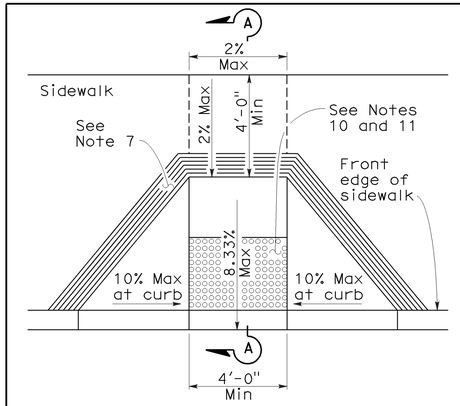

CASE A

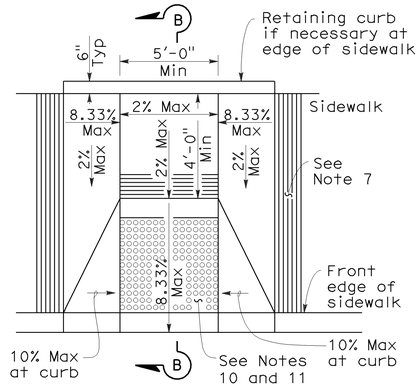

CASE B

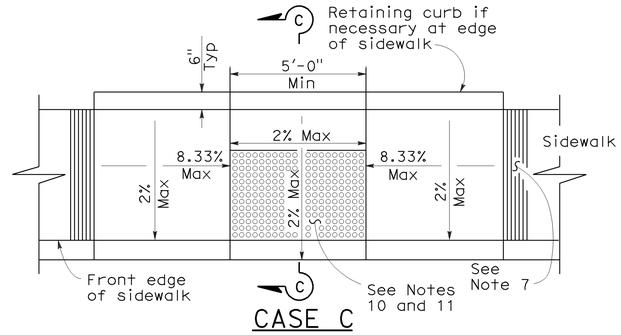

CASE C

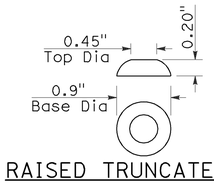

RAISED TRUNCATED DOME

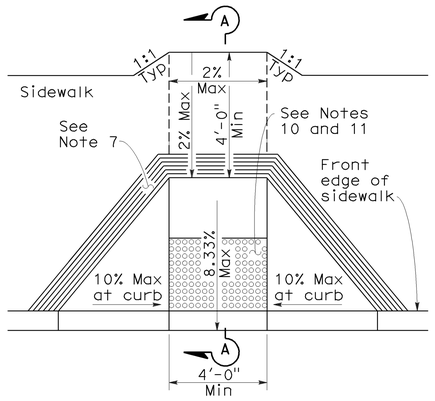

CASE D

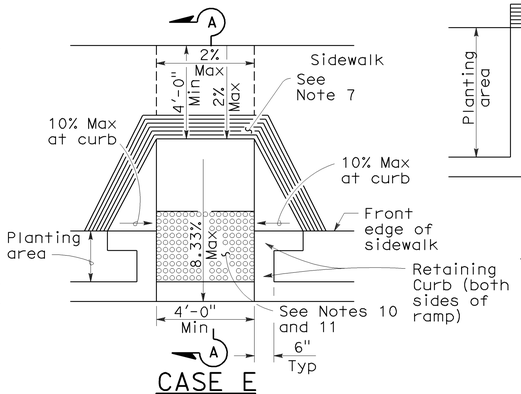

CASE E

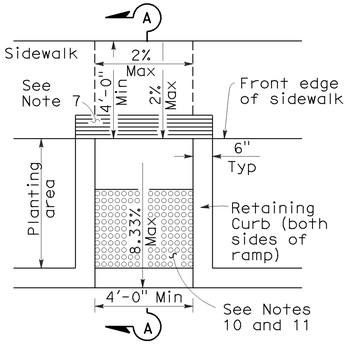

CASE F

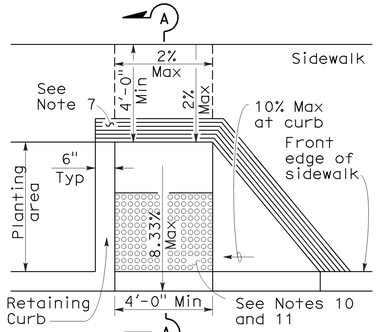

CASE G
See Note 4

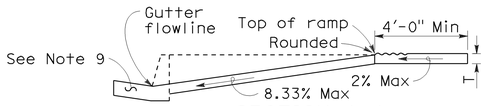

SECTION A-A

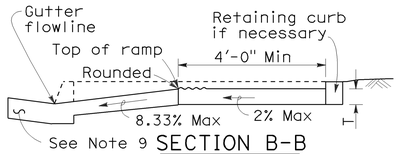

SECTION B-B
Depress entire sidewalk as required

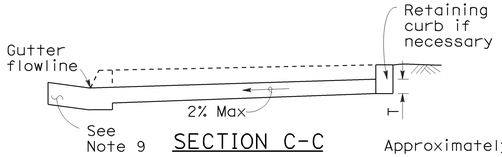

SECTION C-C

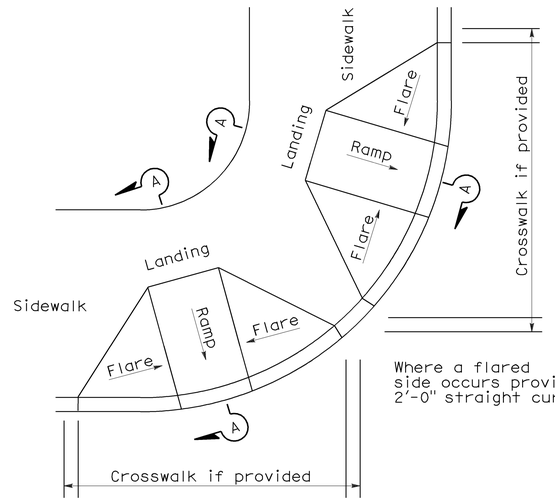

DETAIL A
TYPICAL TWO-RAMP CORNER INSTALLATION
See Note 1

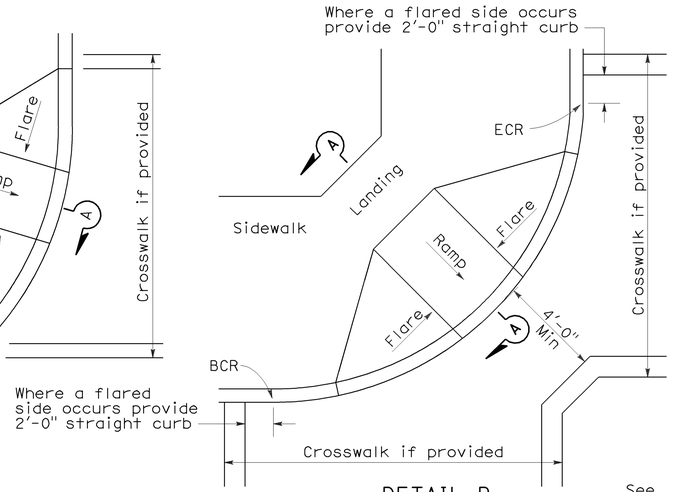

DETAIL B
TYPICAL ONE-RAMP CORNER INSTALLATION
See Notes 1 and 3

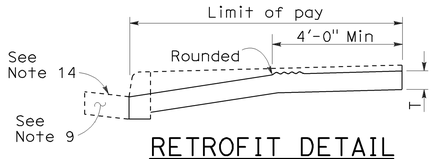

RETROFIT DETAIL
Existing curb and sidewalk

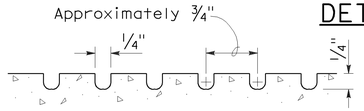

GROOVING DETAIL

NOTES:

1. As site conditions dictate, Case A through Case G curb ramps may be used for corner installations similar to those shown in Detail A and Detail B. The case of curb ramps used in Detail A do not have to be the same. Case A through Case G curb ramps also may be used at mid block locations, as site conditions dictate.
2. If distance from curb to back of sidewalk is too short to accommodate ramp and 4'-0" platform (landing) as shown in Case A, the sidewalk may be depressed longitudinally as in Case B, or C or may be widened as in Case D.
3. When ramp is located in center of curb return, crosswalk configuration must be similar to that shown for Detail B.
4. As site conditions dictate, the retaining curb side and the flared side of the Case G ramp shall be constructed in reversed position.
5. If located on a curve, the sides of the ramp need not be parallel, but the minimum width of the ramp shall be 4'-0".
6. Side slope of ramp flares vary uniformly from a maximum of 10% at curb to conform with longitudinal sidewalk slope adjacent to top of the ramp, except in Case C and Case F.
7. The curb ramp shall be outlined, as shown, with a 1'-0" wide border with 1/4" grooves approximately 3/4" on center. See grooving detail.
8. Transitions from ramps and landing to walks, gutters or streets shall be flush and free of abrupt changes.
9. Maximum slopes of adjoining gutters, the road surface immediately adjacent to the curb ramp or accessible route shall not exceed 5 percent within 4'-0" of the top and bottom of the curb ramp.
10. Curb ramps shall have a detectable warning surface that extends the full width and 3'-0" depth of the ramp. Detectable Warning Surfaces shall conform to the details on this plan and the requirements in the Special Provisions.
11. The edge of the detectable warning surface nearest the street shall be between 6" and 8" from the gutter flowline.
12. Sidewalk and ramp thickness, "T", shall be 3½" minimum.
13. Utility pull boxes, manholes, vaults and all other utility facilities within the boundaries of the curb ramp will be relocated or adjusted to grade by the owner prior to, or in conjunction with, curb ramp construction.
14. For retrofit conditions, removal and replacement of curb apron will be at the Contractor's option, unless otherwise shown on project plans.

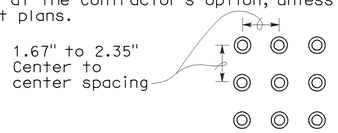

RAISED TRUNCATED DOME PATTERN (IN-LINE)
DETECTABLE WARNING SURFACE
See Note 10

STATE OF CALIFORNIA
DEPARTMENT OF TRANSPORTATION

CURB RAMP DETAILS

NO SCALE

RSP A88A DATED SEPTEMBER 1, 2006 SUPERSEDES STANDARD PLAN A88A
DATED MAY 1, 2006 - PAGE 115 OF THE STANDARD PLANS BOOK DATED MAY 2006.

REVISED STANDARD PLAN RSP A88A

2006 REVISED STANDARD PLAN RSP A88A

8-3-06

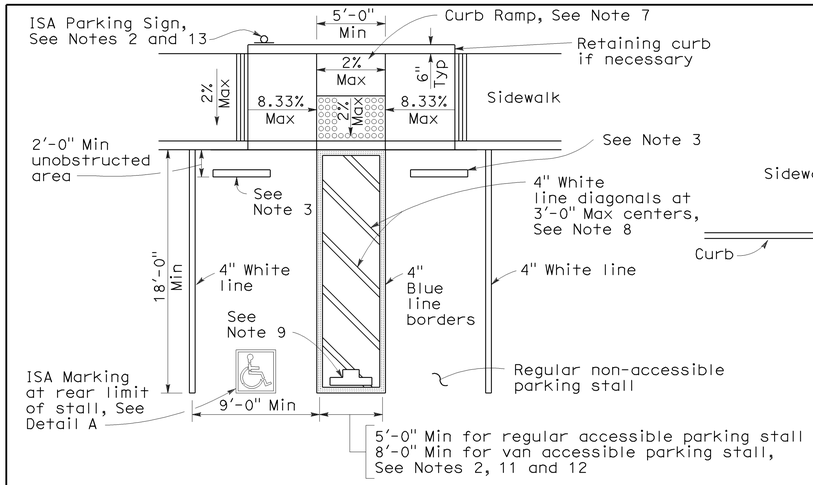

SINGLE PARKING STALL

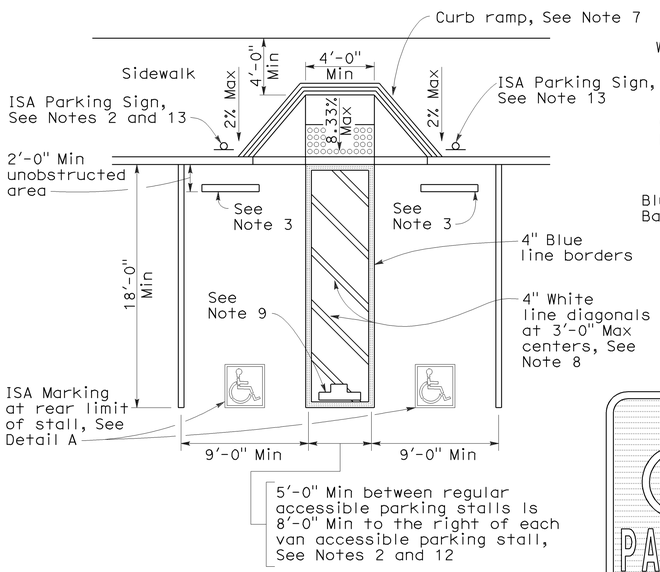

DOUBLE PARKING STALL

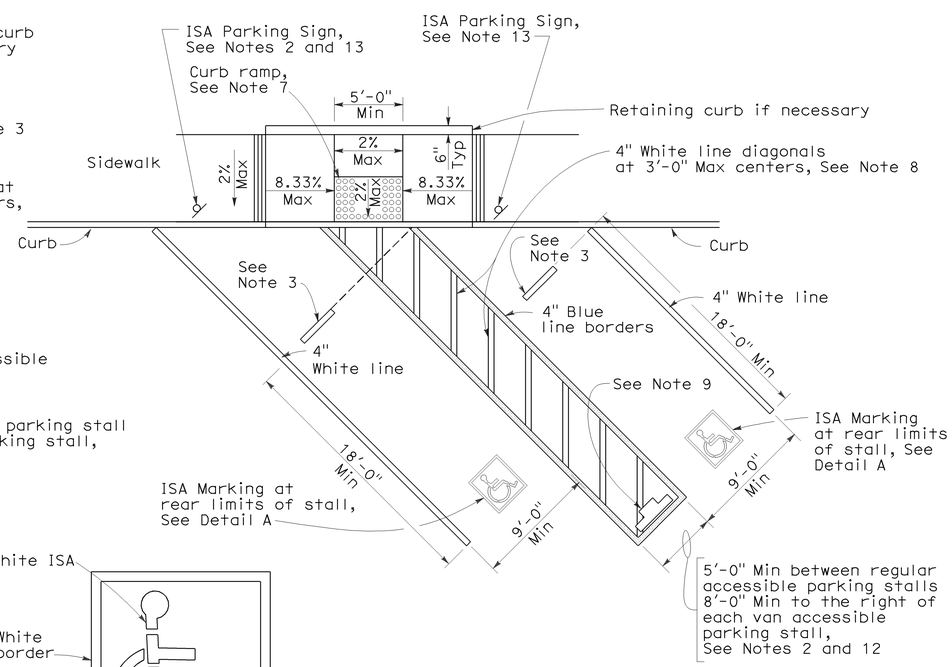

DIAGONAL DOUBLE PARKING STALLS

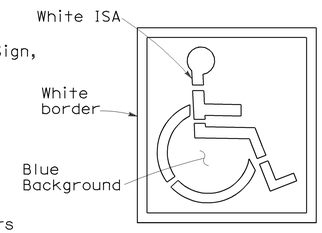

ISA MARKING
See Revised Std Plan RSP A24C

DETAIL A

TABLE A

Total Number of Parking Spaces or Stalls	Minimum Number of Disabled Accessible Parking Spaces or Stalls
1-25	1
26-50	2
51-75	3
76-100	4
101-150	5
151-200	6
201-300	7
301-400	8
401-500	9
501-1000	2 percent of total
Greater than 1001	20 plus 1 for each 100 or fraction thereof over 1001

SIGN R99 (CA)

PLAQUE R99B (CA)

SIGN R99 (CA) with PLAQUE R99B (CA)
See Note 6

SIGN R99C (CA)
See Note 6

UNAUTHORIZED VEHICLES PARKED IN DESIGNATED ACCESSIBLE SPACES NOT DISPLAYING DISTINGUISHING PLACARDS OR SPECIAL LICENSE PLATES ISSUED FOR PERSONS WITH DISABILITIES WILL BE TOWED AWAY AT THE OWNER'S EXPENSE

TOWED VEHICLES MAY BE RECLAIMED AT
(Insert Address)

OR BY TELEPHONING
(Insert Telephone Number)

SIGN R100B (CA)
See Note 10

SIGN R7-8b
See Notes 2 and 6

OFF-STREET PARKING SIGNS
(Parking lot or garage)
See Note 6

ISA = International Symbol of Accessibility

DIST	COUNTY	ROUTE	POST MILES TOTAL PROJECT	SHEET NO.	TOTAL SHEETS
08	SBd	40	R28.1/R51.0	38	49

REGISTERED CIVIL ENGINEER

June 6, 2008
PLANS APPROVAL DATE

REGISTERED PROFESSIONAL ENGINEER Hector David Cordova No. C41957 Exp. 3-31-10 CIVIL STATE OF CALIFORNIA

The State of California or its officers or agents shall not be responsible for the accuracy or completeness of electronic copies of this plan sheet.

To accompany plans dated 11-07-11

NOTES:

1. Accessible parking spaces serving a particular building shall be located on the shortest accessible route of travel from adjacent parking to an accessible entrance. In parking facilities that do not serve a particular building, accessible parking shall be located on the shortest accessible route of travel to an accessible pedestrian entrance of the parking facility.
2. One in every eight accessible off-street parking stalls, but not less than one, shall be served by an accessible aisle of 8'-0" minimum width and shall be signed van accessible. The R7-8b sign shall be mounted below the R99B (CA) plaque or the R99C (CA) sign.
3. In each parking stall, a curb or bumper shall be provided and located to prevent encroachment of vehicles over the required width of walkways. Parking stalls shall be so located that persons with disabilities are not compelled to wheel or walk behind parked cars other than their own.
4. Surface slopes of accessible off-street parking stalls shall be the minimum possible and shall not exceed 2 percent in any direction.
5. Table A shall be used to determine the required number of accessible parking stalls in each parking lot or garage.
6. Where Plaque R99B (CA), Sign R99C (CA) or Sign R7-8b are installed, the bottom of the sign or plaque panel shall be a minimum of 7'-0" above the surrounding surface.
7. Curb ramps shall conform to the details shown on Revised Standard Plan RSP A88A.
8. Blue paint, instead of white may be used for marking accessibility aisles in areas where snow may cause white markings to not be visible.
9. The words "NO PARKING", shall be painted in white letters no less than 1'-0" high and located so that it is visible to traffic enforcement officials. See Revised Standard Plan RSP A90B for details of the "NO PARKING" pavement marking.
10. A R100B (CA) sign shall be posted in a conspicuous place at each entrance to off-street parking facilities or immediately adjacent to and visible from each stall. The sign shall include the address where the towed vehicle may be reclaimed and the telephone number of the local traffic law enforcement agency.
11. Where a single (non-van) accessible parking space is provided, the loading and unloading access aisle shall be on the passenger side of the vehicle as the vehicle is going forward into the parking space.
12. Where a van accessible parking space is provided, the loading and unloading access aisle shall be 8'-0" wide minimum, and shall be on the passenger side of the vehicle as the vehicle is going forward into the parking space.
13. Accessible Parking Only Sign shall be Sign R99C (CA) or Sign R99 (CA) with Plaque R99B (CA).

STATE OF CALIFORNIA
DEPARTMENT OF TRANSPORTATION

ACCESSIBLE PARKING OFF-STREET

NO SCALE

RSP A90A DATED JUNE 6, 2008 SUPERSEDES STANDARD PLAN A90A
DATED MAY 1, 2006 - PAGE 117 OF THE STANDARD PLANS BOOK DATED MAY 2006.

REVISED STANDARD PLAN RSP A90A

2006 REVISED STANDARD PLAN RSP A90A

6-3-08

DIST	COUNTY	ROUTE	POST MILES TOTAL PROJECT	SHEET NO.	TOTAL SHEETS
08	SBd	40	R28.1/R51.0	39	49

REGISTERED CIVIL ENGINEER

May 15, 2009
PLANS APPROVAL DATE

The State of California or its officers or agents shall not be responsible for the accuracy or completeness of electronic copies of this plan sheet.

REGISTERED PROFESSIONAL ENGINEER William K. Farnbach No. C49042 Exp. 9-30-10 CIVIL STATE OF CALIFORNIA

To accompany plans dated 11-07-11

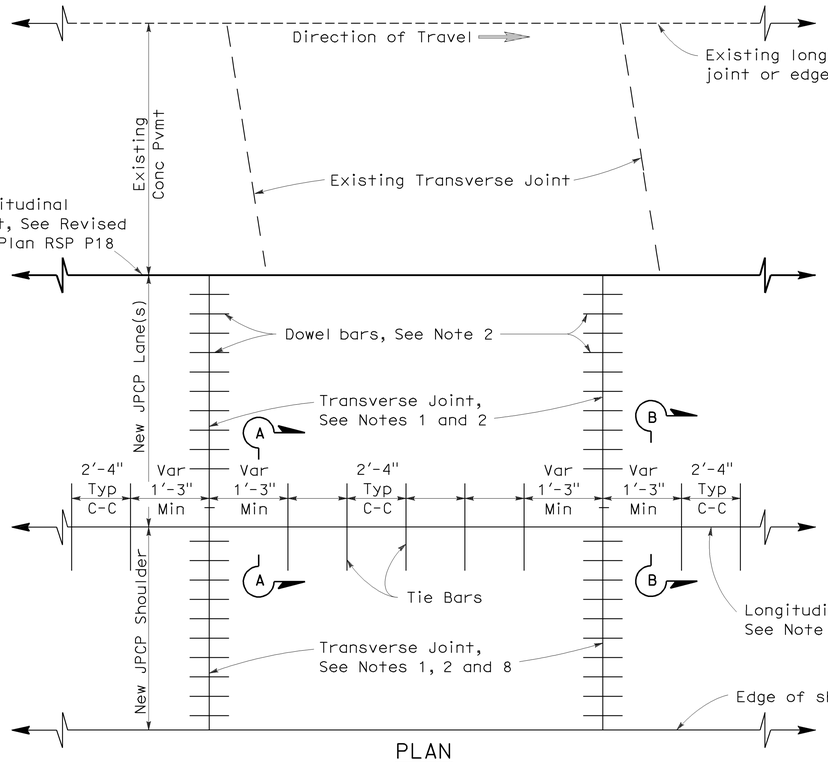

PLAN

LANE/SHOULDER ADDITION OR RECONSTRUCTION

See Notes 6 and 7

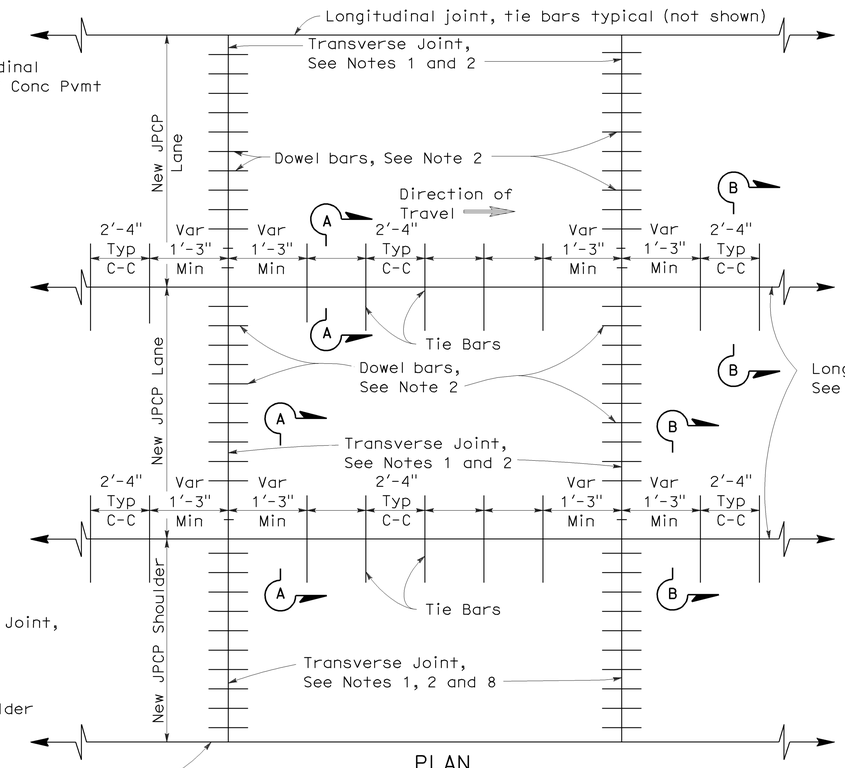

PLAN

NEW CONSTRUCTION

See Notes 6 and 7

NOTES:

1. Transverse joints shall be constructed at right angles to the longitudinal pavement joints in new jointed plain concrete pavement and spaced at successive repeated intervals of 12′, 15′, 13′ and 14′.
2. For transverse joint and dowel bar details not shown, See Revised Standard Plan RSP P10.
3. Construct longitudinal contraction joints as shown in Section A-A when more than one lane or shoulder widths are placed at one time. If constructing one lane at a time, use longitudinal construction joint, as shown in Section B-B.
4. For additional longitudinal joint details, see Revised Standard Plan RSP P18.
5. If fresh concrete is placed adjacent to existing concrete, the top corner of the new hardened concrete does not need to be rounded to the ¼" radius as shown.
6. Joint spacing patterns do not apply to intersections.
7. Details can also apply to inside widening.
8. Dowel bars may be omitted from shoulders when the shoulder cross slope is not the same as the adjacent traffic lane.

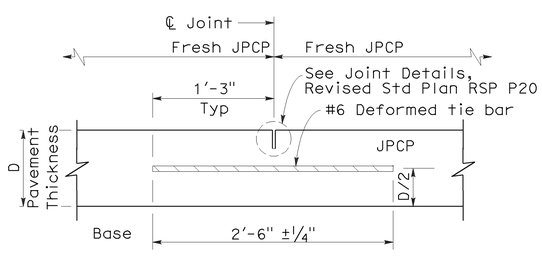

SECTION A-A

LONGITUDINAL CONTRACTION JOINT

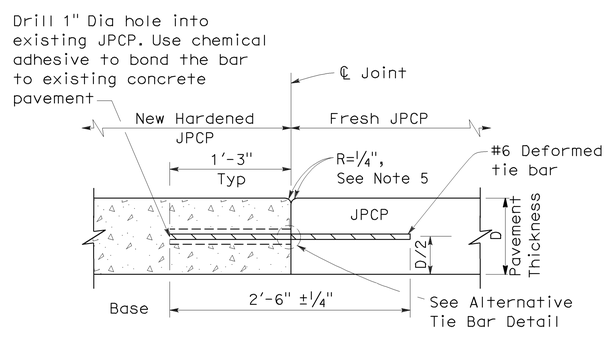

SECTION B-B

LONGITUDINAL CONSTRUCTION JOINT

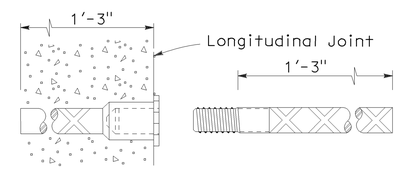

ALTERNATIVE TIE BAR SPLICE DETAIL

(Splice Coupler)

TIE BAR DETAILS

STATE OF CALIFORNIA
DEPARTMENT OF TRANSPORTATION

JOINTED PLAIN CONCRETE PAVEMENT

NO SCALE

RSP P1 DATED MAY 15, 2009 SUPERSEDES STANDARD PLAN P1
DATED MAY 1, 2006 - PAGE 119 OF THE STANDARD PLANS BOOK DATED MAY 2006.

REVISED STANDARD PLAN RSP P1

2006 REVISED STANDARD PLAN RSP P1

119

5-8-09

DIST	COUNTY	ROUTE	POST MILES TOTAL PROJECT	SHEET NO.	TOTAL SHEETS
08	SBd	40	R28.1/R51.0	40	49

William K. Farnbach
REGISTERED CIVIL ENGINEER

June 5, 2009
PLANS APPROVAL DATE

REGISTERED PROFESSIONAL ENGINEER
William K. Farnbach
No. C49042
Exp. 9-30-10
CIVIL
STATE OF CALIFORNIA

The State of California or its officers or agents shall not be responsible for the accuracy or completeness of electronic copies of this plan sheet.

To accompany plans dated 11-07-11

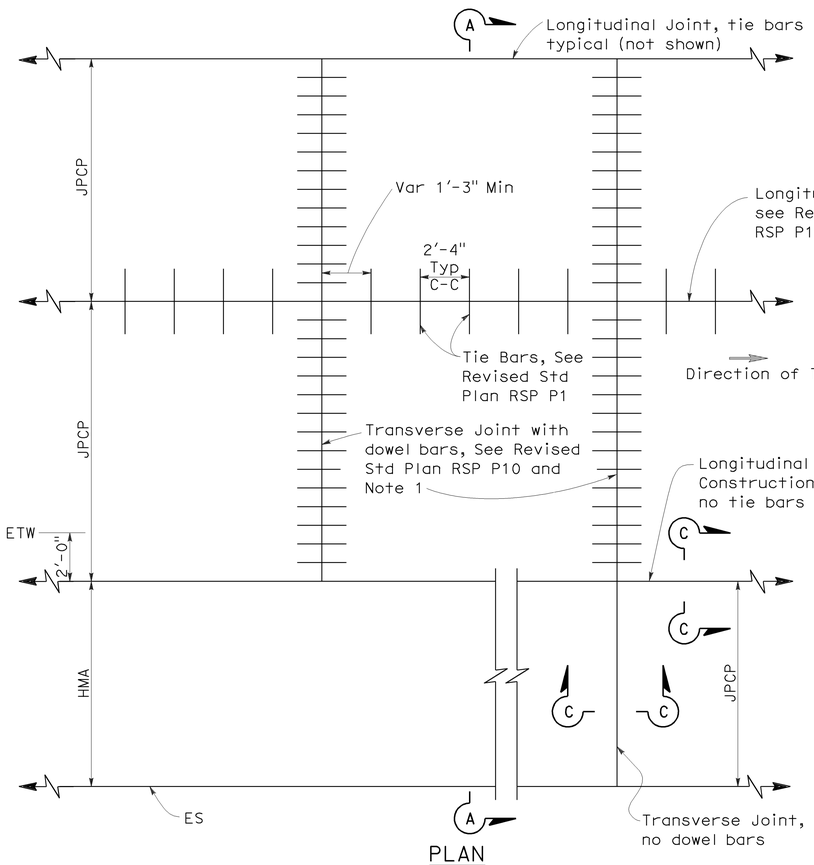

PLAN
NEW CONSTRUCTION

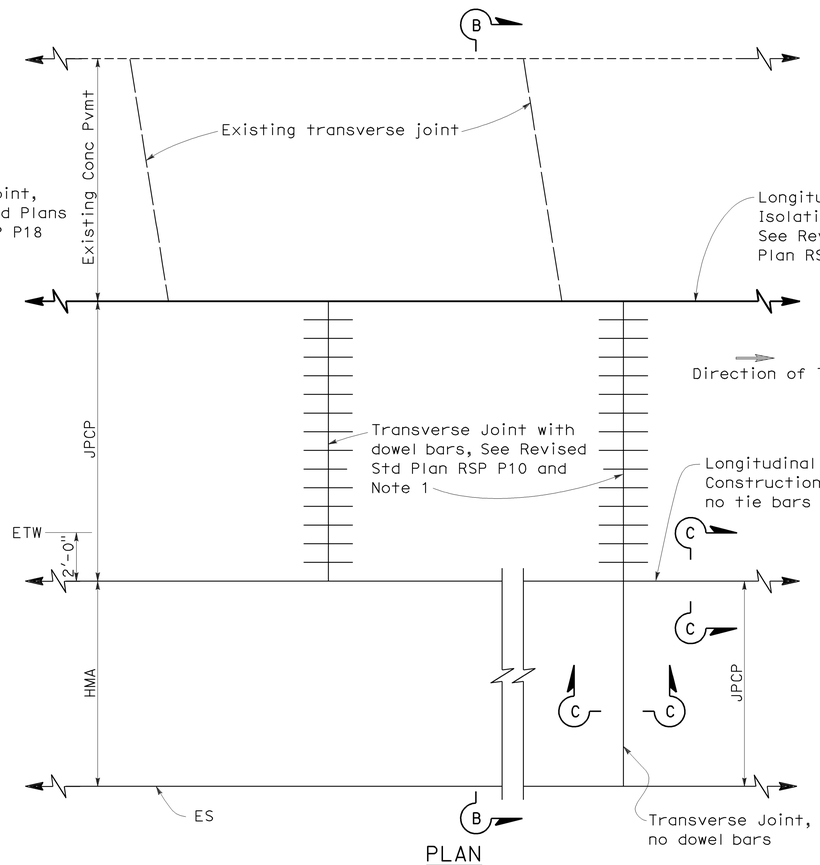

PLAN
LANE/SHOULDER ADDITION OR RECONSTRUCTION

NOTES:

1. Transverse joints shall be constructed at right angles to the longitudinal pavement joints in new Jointed Plain Concrete Pavement and spaced at successive repeated intervals of 12', 15', 13' and 14'.
2. For locations of rumble strips, see project plans. For rumble strip details not shown, see Standard Plans A40A and A40B.
3. Joint spacing patterns do not apply to intersections.

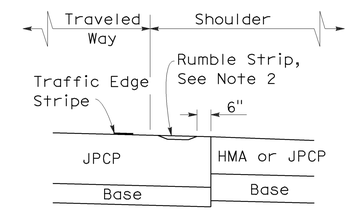

DETAIL "A"

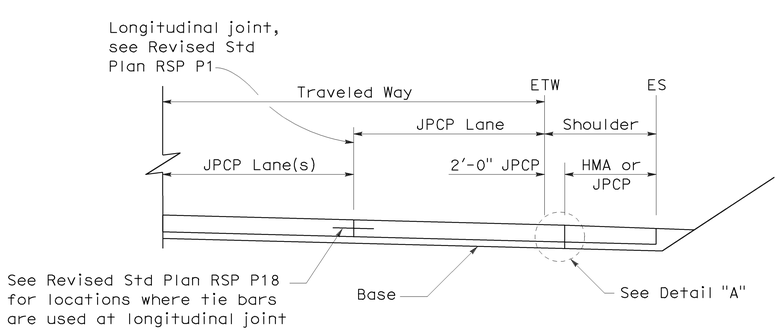

SECTION A-A

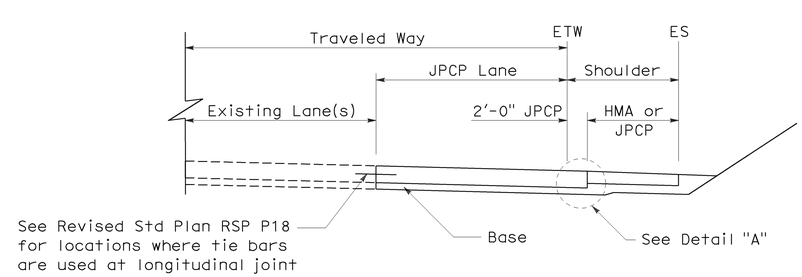

SECTION B-B

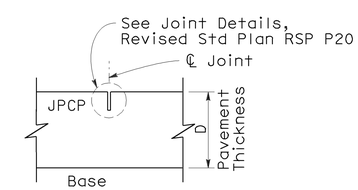

SECTION C-C
TRANSVERSE/LONGITUDINAL JOINT
(no dowel bars/tie bars)

STATE OF CALIFORNIA
DEPARTMENT OF TRANSPORTATION

JOINTED PLAIN CONCRETE PAVEMENT-WIDENED SLAB DETAILS

NO SCALE

RSP P2 DATED JUNE 5, 2009 SUPERCEDES STANDARD PLAN P2
DATED MAY 1, 2006 - PAGE 120 OF THE STANDARD PLANS BOOK DATED MAY 2006.

REVISED STANDARD PLAN RSP P2

2006 REVISED STANDARD PLAN RSP P2

5-19-09

DIST	COUNTY	ROUTE	POST MILES TOTAL PROJECT	SHEET NO.	TOTAL SHEETS
08	SBd	40	R28.1/R51.0	41	49

REGISTERED CIVIL ENGINEER

May 15, 2009
PLANS APPROVAL DATE

REGISTERED PROFESSIONAL ENGINEER William K. Farnbach No. C49042 Exp. 9-30-10 CIVIL STATE OF CALIFORNIA

The State of California or its officers or agents shall not be responsible for the accuracy or completeness of electronic copies of this plan sheet.

To accompany plans dated 11-07-11

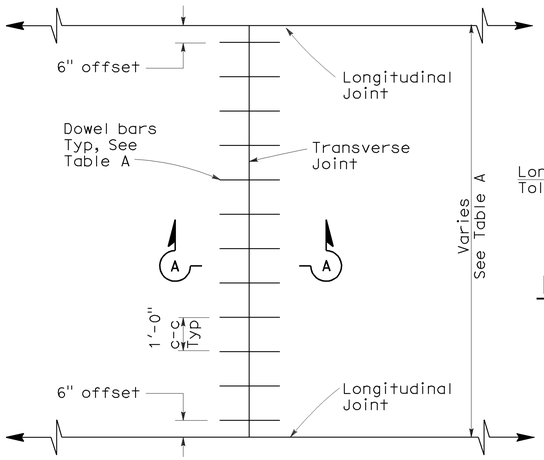

TRANSVERSE JOINT DOWEL BAR LAYOUT

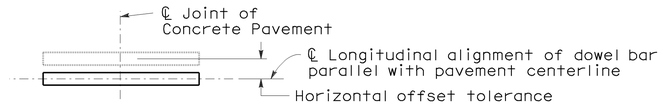

PLAN

HORIZONTAL OFFSET TOLERANCE

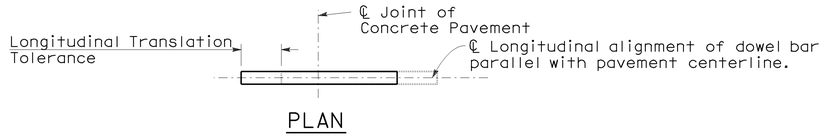

PLAN

LONGITUDINAL TRANSLATION TOLERANCE

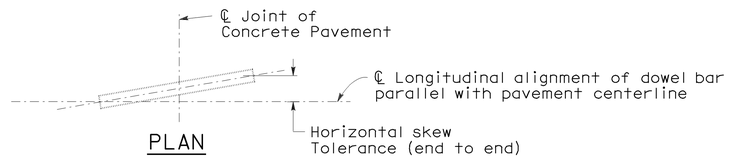

PLAN

HORIZONTAL SKEW TOLERANCE

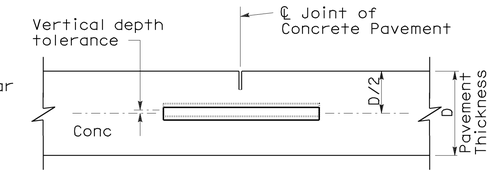

ELEVATION

VERTICAL DEPTH TOLERANCE

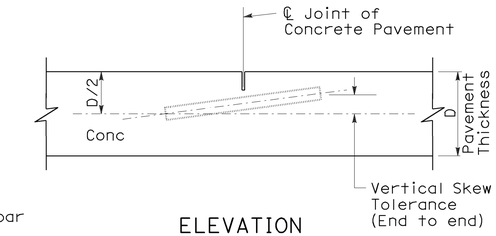

ELEVATION

VERTICAL SKEW TOLERANCE

NOTES:

1. See Revised Standard Plan RSP P1 for typical dowel bar placement and locations.
2. 1½" Dia smooth dowel bars are to be used with a pavement thickness, D, equal to or greater than 0.70 feet. For pavement thickness, D, less than 0.70 feet, use 1¼" Dia smooth dowel bars.
3. For widths not shown, see Project Plans.
4. If fresh concrete pavement is placed adjacent to existing concrete pavement, the top corner of the existing concrete pavement does not need to be rounded to the ¼" radius, as shown.

TABLE A (See Note 3)

Dowel Bar Transverse Spacing Table	
Width between Longitudinal Joints	Number of Dowels between Longitudinal Joints
14'-0"	14
13'-0"	13
12'-0"	12
11'-0"	11
10'-0"	10
8'-0"	8
5'-0"	5
4'-0"	4

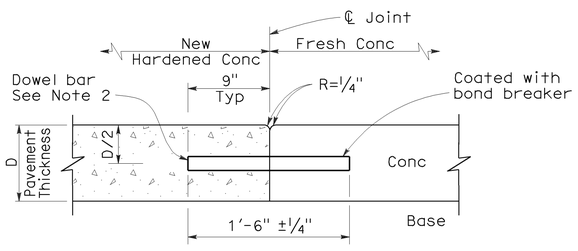

SECTION A-A

TRANSVERSE CONSTRUCTION JOINT DETAIL

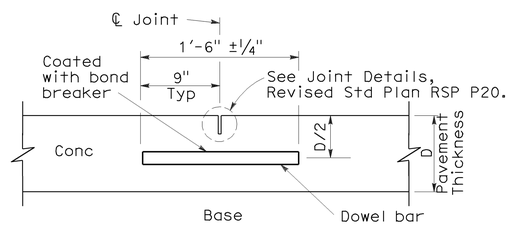

TRANSVERSE CONTRACTION JOINT

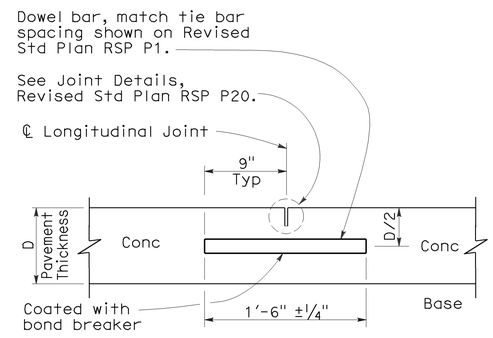

LONGITUDINAL CONTRACTION JOINT WITH DOWEL BARS

(See Revised Std Plan RSP P18)

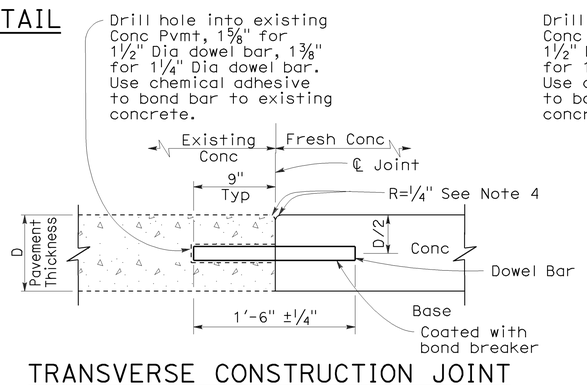

TRANSVERSE CONSTRUCTION JOINT FOR EXISTING CONCRETE PAVEMENT

(Drill and bond locations)

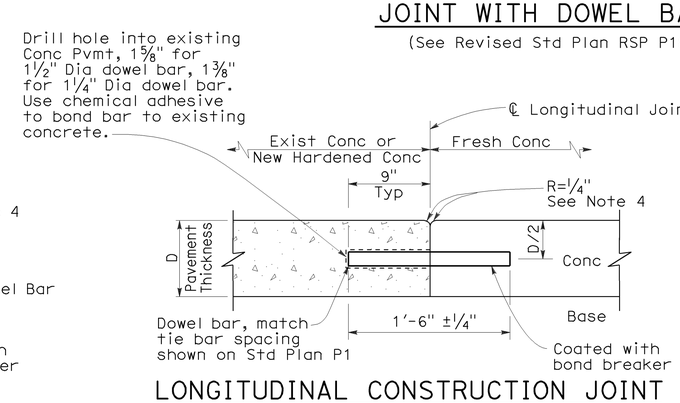

LONGITUDINAL CONSTRUCTION JOINT WITH DOWEL BARS

(See Revised Std Plan RSP P18)

STATE OF CALIFORNIA
DEPARTMENT OF TRANSPORTATION

CONCRETE PAVEMENT-DOWEL BAR DETAILS

NO SCALE

RSP P10 DATED MAY 15, 2009 SUPERSEDES STANDARD PLAN P10
DATED MAY 1, 2006 - PAGE 124 OF THE STANDARD PLANS BOOK DATED MAY 2006.

REVISED STANDARD PLAN RSP P10

2006 REVISED STANDARD PLAN RSP P10

5-8-09

DIST	COUNTY	ROUTE	POST MILES TOTAL PROJECT	SHEET NO.	TOTAL SHEETS
08	SBd	40	R28.1/R51.0	42	49

William K. Farnbach
REGISTERED CIVIL ENGINEER

May 15, 2009
PLANS APPROVAL DATE

REGISTERED PROFESSIONAL ENGINEER William K. Farnbach No. C49042 Exp. 9-30-10 CIVIL STATE OF CALIFORNIA

The State of California or its officers or agents shall not be responsible for the accuracy or completeness of electronic copies of this plan sheet.

To accompany plans dated 11-07-11

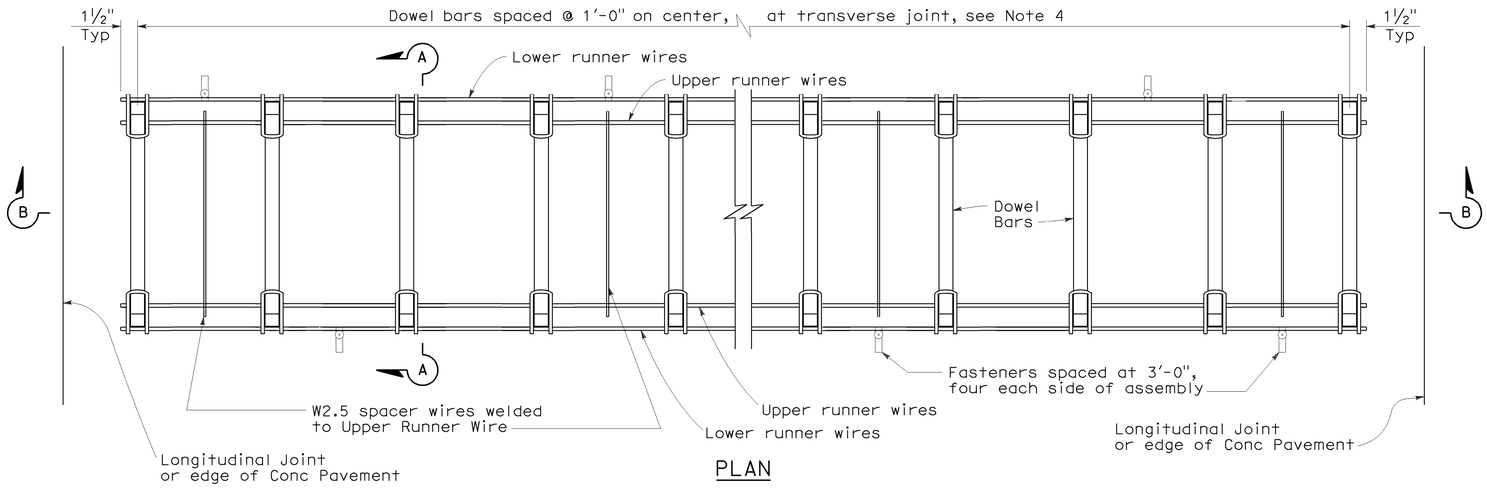

PLAN

DOWEL BAR BASKET (TRANSVERSE JOINT)

See Note 1

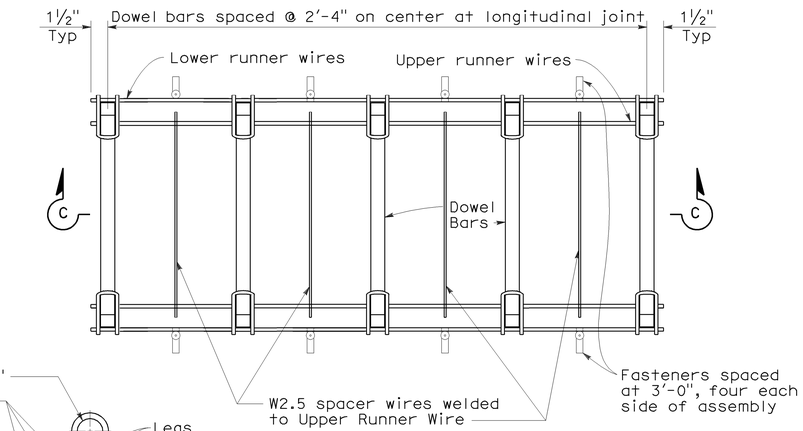

PLAN

DOWEL BAR BASKET (LONGITUDINAL JOINT)

See Note 1

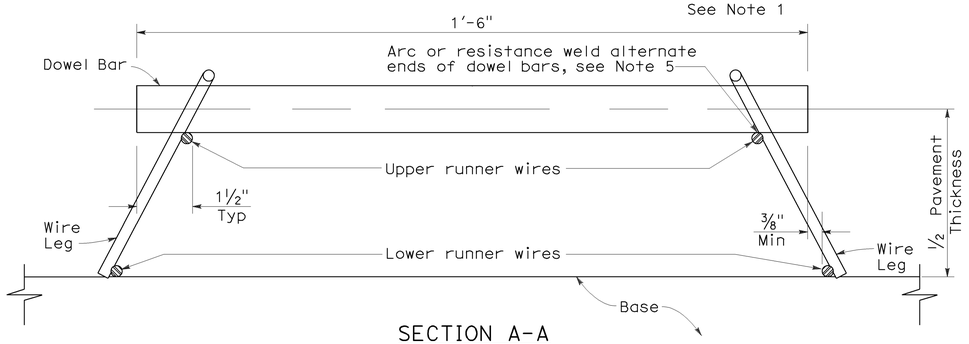

SECTION A-A

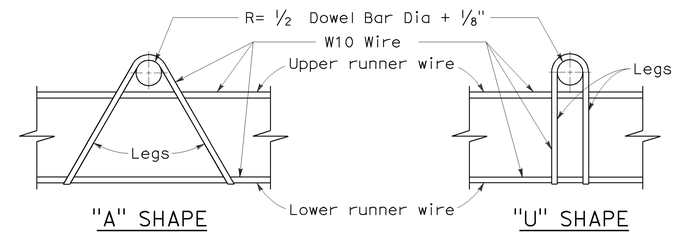

ASSEMBLY FRAME DETAILS

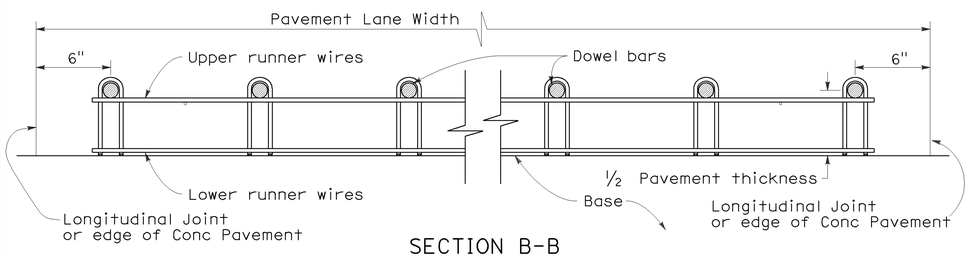

SECTION B-B

See Note 1

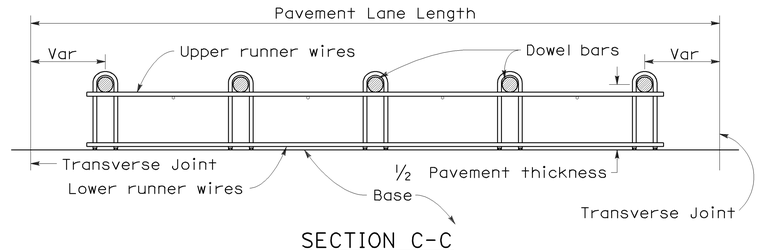

SECTION C-C

See Notes 1 and 4

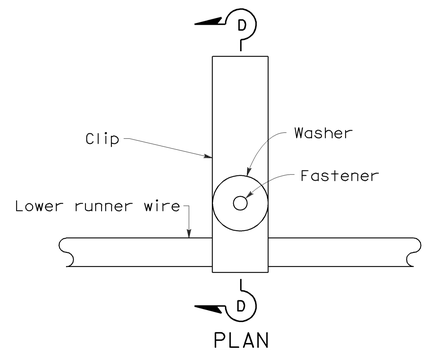

PLAN

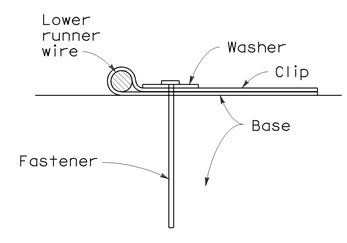

SECTION D-D

FASTENER DETAIL

NOTES:

1. "U" frame shape assembly shown. "U" frame shape or "A" frame shape are acceptable.
2. Wire sizes shown are minimum required.
3. All wire intersections are to be resistance welded.
4. Use tie bar spacing for longitudinal dowel bar locations. See Revised Std Plans RSPs P1, P2, and P3 for tie bar requirements.
5. Weld may be at top or bottom of dowel bar.

STATE OF CALIFORNIA
DEPARTMENT OF TRANSPORTATION

CONCRETE PAVEMENT-DOWEL BAR BASKET DETAILS

NO SCALE

RSP P12 DATED MAY 15, 2009 SUPERSEDES RSP P12 DATED NOVEMBER 17, 2006 AND STANDARD PLAN P12 DATED MAY 1, 2006 - PAGE 125 OF THE STANDARD PLANS BOOK DATED MAY 2006.

REVISED STANDARD PLAN RSP P12

2006 REVISED STANDARD PLAN RSP P12

5-8-09

DIST	COUNTY	ROUTE	POST MILES TOTAL PROJECT	SHEET NO.	TOTAL SHEETS
08	SBd	40	R28.1/R51.0	43	49

William K. Farnbach
REGISTERED CIVIL ENGINEER

May 15, 2009
PLANS APPROVAL DATE

REGISTERED PROFESSIONAL ENGINEER
William K. Farnbach
No. C49042
Exp. 9-30-10
CIVIL
STATE OF CALIFORNIA

The State of California or its officers or agents shall not be responsible for the accuracy or completeness of electronic copies of this plan sheet.

To accompany plans dated 11-07-11

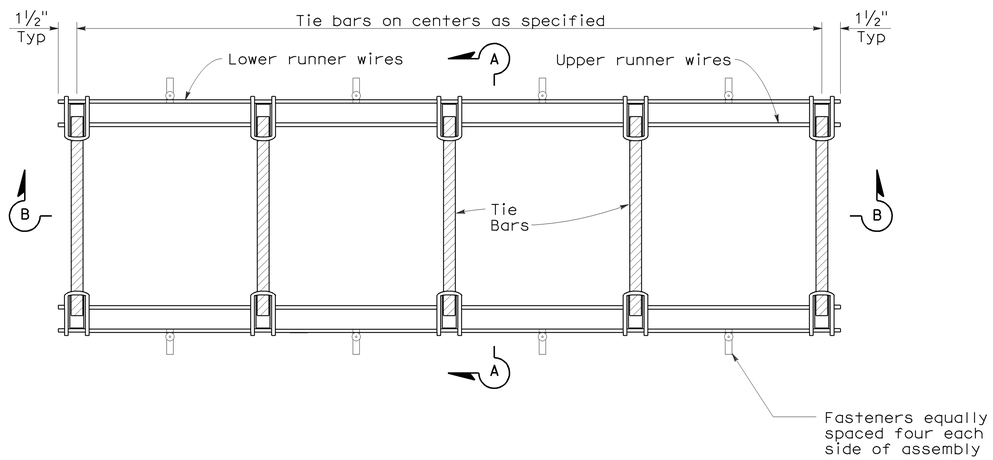

PLAN

TIE BAR BASKET

(TIE BARS AT LONGITUDINAL JOINT)
See Note 1

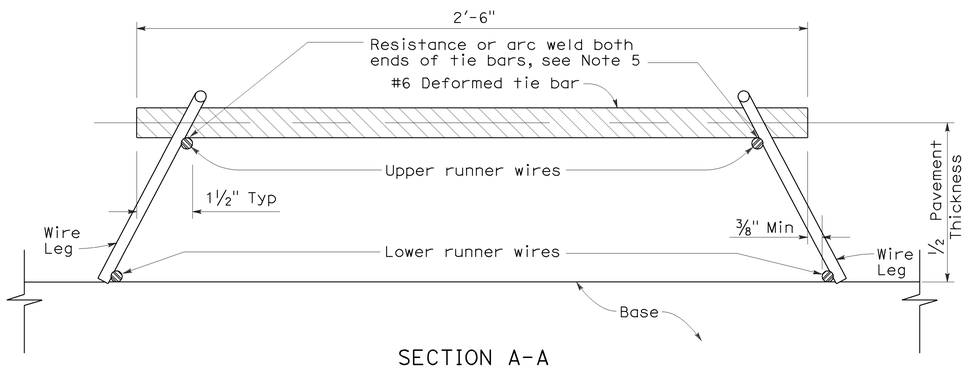

SECTION A-A

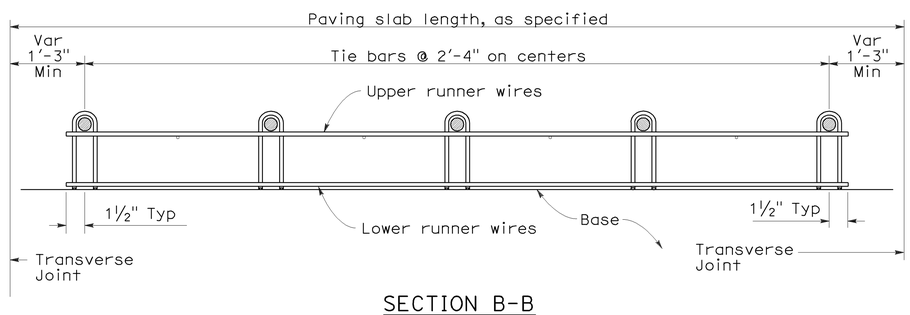

SECTION B-B
See Note 1

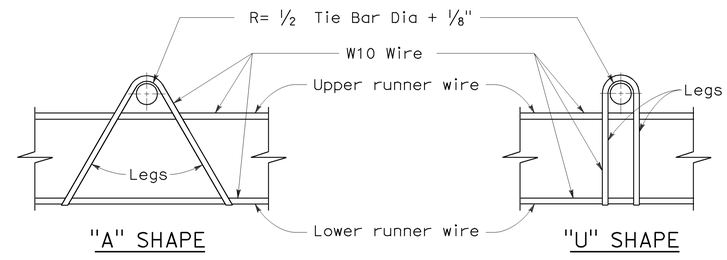

ASSEMBLY FRAME DETAILS

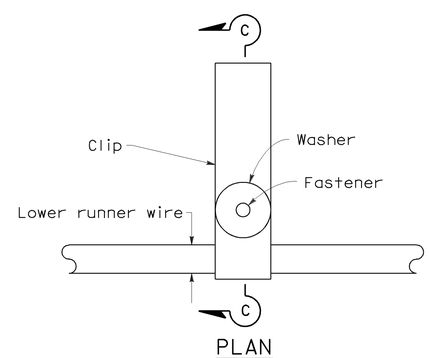

PLAN

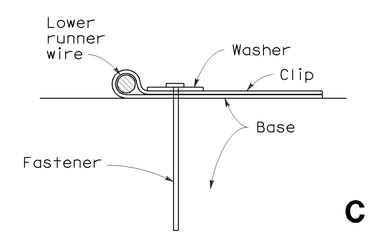

SECTION C-C

FASTENER DETAIL

NOTES:

1. "U" frame shape assembly shown. "U" frame shape or "A" frame shape are acceptable.
2. Wire sizes shown are minimum required.
3. All wire intersections are to be resistance welded.
4. Not for use on nondoweled skewed jointed plain concrete pavement.
5. Weld may be at top or bottom of tie bar.

STATE OF CALIFORNIA
DEPARTMENT OF TRANSPORTATION

CONCRETE PAVEMENT-TIE BAR BASKET DETAILS

NO SCALE

RSP P17 DATED MAY 15, 2009 SUPERSEDES RSP P17 DATED NOVEMBER 17, 2006 AND STANDARD PLAN P17 DATED MAY 1, 2006 - PAGE 126 OF THE STANDARD PLANS BOOK DATED MAY 2006.

REVISED STANDARD PLAN RSP P17

2006 REVISED STANDARD PLAN RSP P17

5-8-09

DIST	COUNTY	ROUTE	POST MILES TOTAL PROJECT	SHEET NO.	TOTAL SHEETS
08	SBd	40	R28.1/R51.0	44	49

William K. Farnbach
REGISTERED CIVIL ENGINEER

June 5, 2009
PLANS APPROVAL DATE

REGISTERED PROFESSIONAL ENGINEER William K. Farnbach No. C49042 Exp. 9-30-10 CIVIL STATE OF CALIFORNIA

The State of California or its officers or agents shall not be responsible for the accuracy or completeness of electronic copies of this plan sheet.

To accompany plans dated 11-07-11

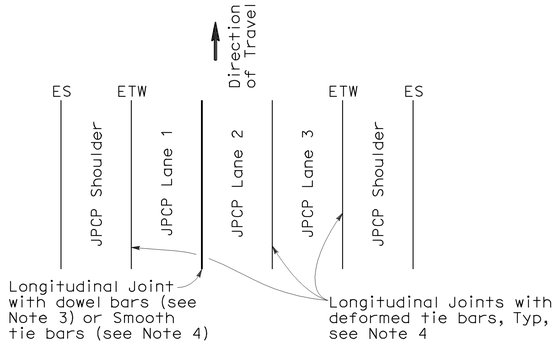

3 LANES WITH TIED CONCRETE SHOULDERS
PLAN

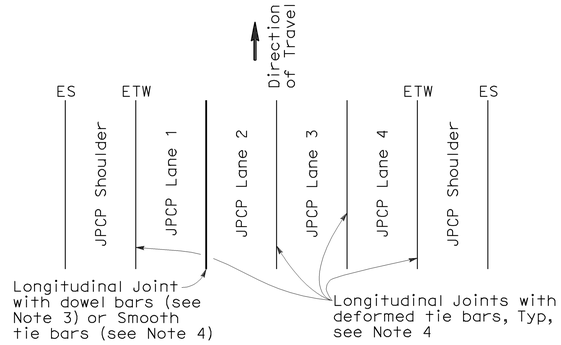

4 LANES WITH TIED CONCRETE SHOULDERS
PLAN

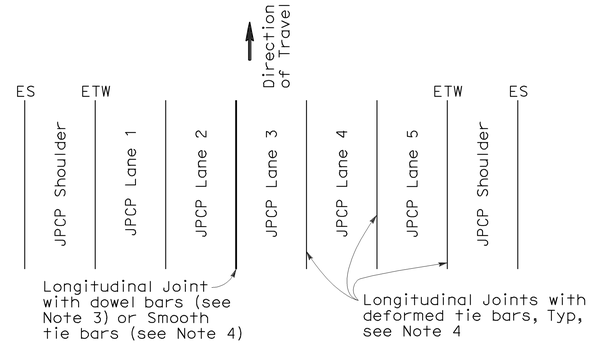

5 LANES WITH TIED CONCRETE SHOULDERS
PLAN

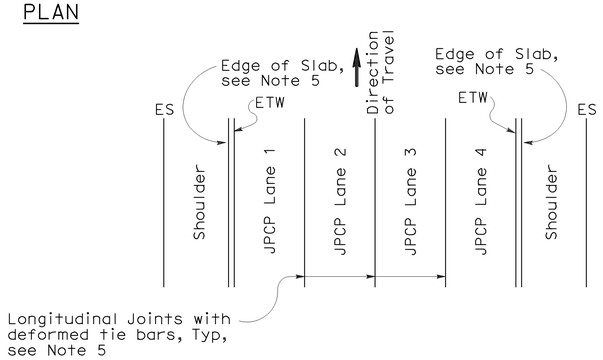

4 LANES OR LESS WITH WIDENED SLAB
PLAN

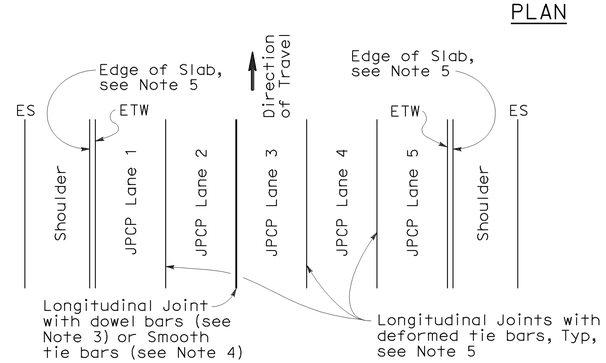

5 LANES WITH WIDENED SLAB
PLAN

NEW CONSTRUCTION

Location of Longitudinal Joints
(For JPCP)

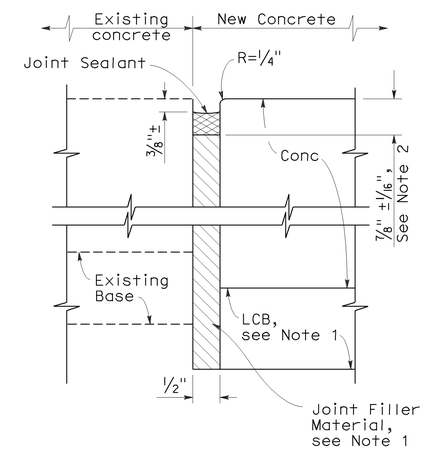

DETAIL A

ISOLATION JOINT

NOTES:

1. Where Lean Concrete Base is not used as base material, the joint filler material used for the longitudinal isolation joint shall only extend to the bottom of the new concrete slab. See Detail A.
2. Use 5/8" ±1/16" dimension for silicone sealant.
3. See Revised Standard Plan RSP P10 for longitudinal joint with dowel bars.
4. See Revised Standard Plan RSP P1.
5. See Revised Standard Plan RSP P2.

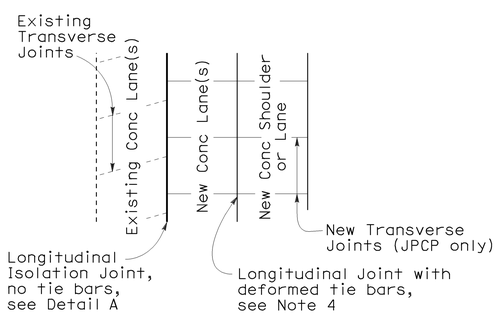

CASE 1
PLAN

Transverse Joints do not align between new and existing

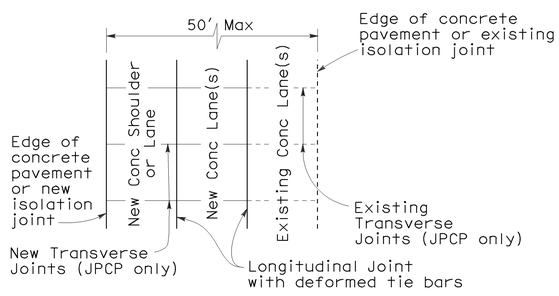

CASE 2
PLAN

Transverse Joints align between new and existing

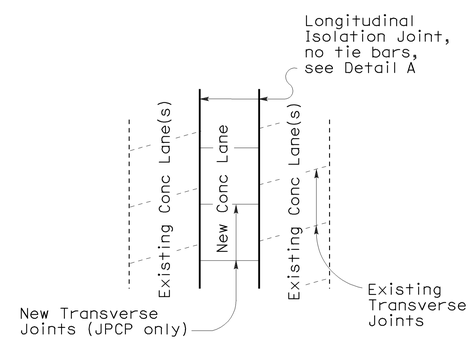

CASE 3 (INTERIOR LANE REPLACEMENT)
PLAN

Transverse Joints do not align between new and existing

LANE/SHOULDER ADDITION OR RECONSTRUCTION

(For JPCP and CRCP)

STATE OF CALIFORNIA
DEPARTMENT OF TRANSPORTATION

CONCRETE PAVEMENT-LANE SCHEMATICS AND ISOLATION JOINT DETAIL

NO SCALE

RSP P18 DATED JUNE 5, 2009 SUPERSEDES RSP P18 DATED MAY 15, 2009, RSP P18 DATED NOVEMBER 17, 2006 AND STANDARD PLAN P18 DATED MAY 1, 2006 - PAGE 127 OF THE STANDARD PLANS BOOK DATED MAY 2006.

REVISED STANDARD PLAN RSP P18

2006 REVISED STANDARD PLAN RSP P18

5-14-09

DIST	COUNTY	ROUTE	POST MILES TOTAL PROJECT	SHEET NO.	TOTAL SHEETS
08	SBd	40	R28.1/R51.0	45	49

William K. Farnbach
REGISTERED CIVIL ENGINEER

May 15, 2009
PLANS APPROVAL DATE

REGISTERED PROFESSIONAL ENGINEER William K. Farnbach No. C49042 Exp. 9-30-10 CIVIL STATE OF CALIFORNIA

The State of California or its officers or agents shall not be responsible for the accuracy or completeness of electronic copies of this plan sheet.

To accompany plans dated 11-07-11

NOTE:

1. Tie bars, dowel bars, and reinforcement are not shown in joint seal details, see Revised Standard Plans RSP P1, RSP P3, RSP P10, RSP P35, RSP P45, or RSP P46 as applicable.

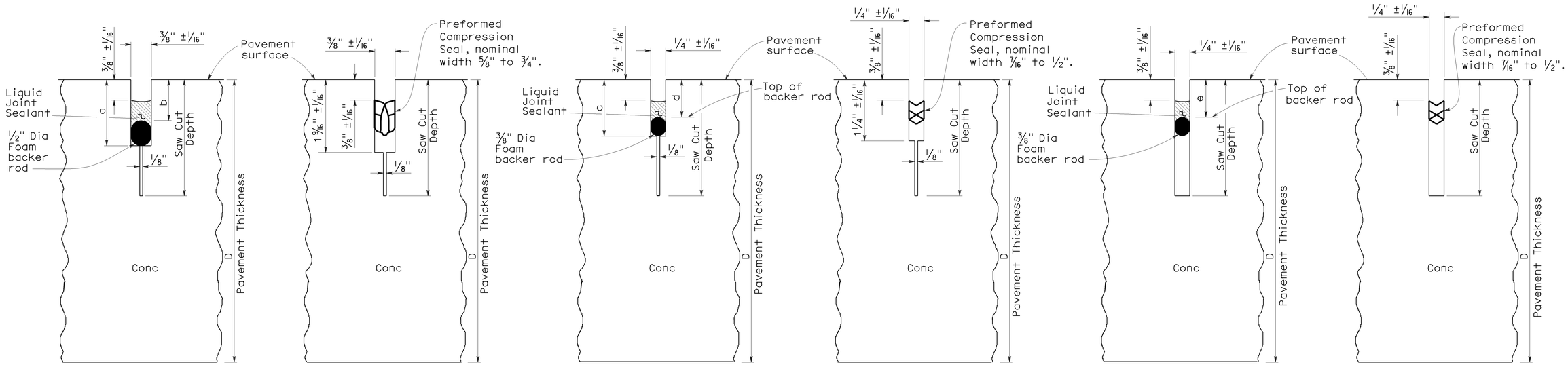

TYPE A1
Transverse Contraction Joints

TYPE A2
Longitudinal Contraction Joints

TYPE B
Longitudinal or Transverse Contraction Joint

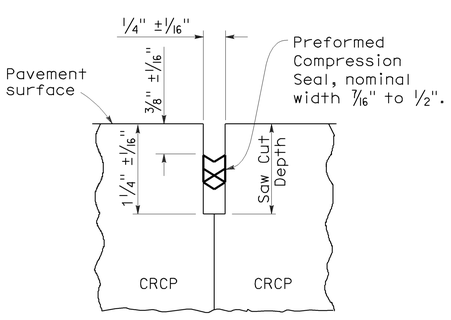

COMPRESSION SEAL

TYPE C
Transverse and Longitudinal Construction Joints (For CRCP)

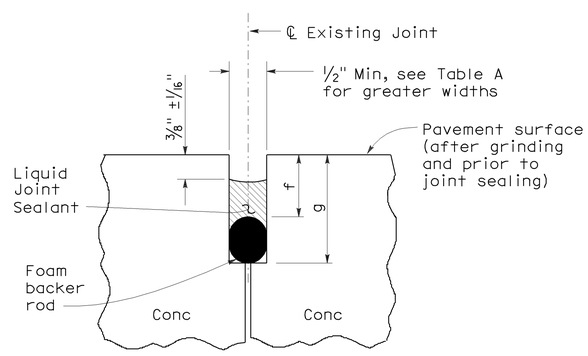

LIQUID SEALANT

TYPE R
Retrofit Transverse and Longitudinal Joints

LIQUID SEALANT RESERVOIR DEPTH

LIQUID SEALANT MATERIAL	3/8" Joint Width Type A1		1/4" Joint Width Type A2		1/4" Joint Width Type B
	DIMENSION		DIMENSION		DIMENSION
	a	b	c	d	e
SILCONE	1" ±1/16"	5/8" ±1/16"	15/16" ±1/16"	9/16" ±1/16"	9/16" ±1/16"
ASPHALT RUBBER	1 3/16" ±1/16"	3/4" ±1/16"	1 1/16" ±1/16"	11/16" ±1/16"	11/16" ±1/16"

TABLE A (TYPE R JOINT)

Sawn Joint Width	Backer Rod Diameter ± 1/16"	DIMENSION "f"	DIMENSION "g"
1"	1 5/16"	7/8"	2 1/4"
7/8"	1 3/16"	13/16"	2"
3/4"	1"	3/4"	1 3/4"
5/8"	7/8"	11/16"	1 1/2"
1/2"	11/16"	5/8"	1 1/4"

STATE OF CALIFORNIA
DEPARTMENT OF TRANSPORTATION

CONCRETE PAVEMENT-JOINT DETAILS

NO SCALE

RSP P20 DATED MAY 15, 2009 SUPERSEDES STANDARD PLAN P20
DATED MAY 1, 2006 - PAGE 128 OF THE STANDARD PLANS BOOK DATED MAY 2006.

REVISED STANDARD PLAN RSP P20

2006 REVISED STANDARD PLAN RSP P20

5-8-09

DIST	COUNTY	ROUTE	POST MILES TOTAL PROJECT	SHEET NO.	TOTAL SHEETS
08	SBd	40	R28.1/R51.0	46	49

William K. Farnbach
REGISTERED CIVIL ENGINEER

May 15, 2009
PLANS APPROVAL DATE

REGISTERED PROFESSIONAL ENGINEER
William K. Farnbach
No. C49042
Exp. 9-30-10
CIVIL
STATE OF CALIFORNIA

The State of California or its officers or agents shall not be responsible for the accuracy or completeness of electronic copies of this plan sheet.

To accompany plans dated 11-07-11

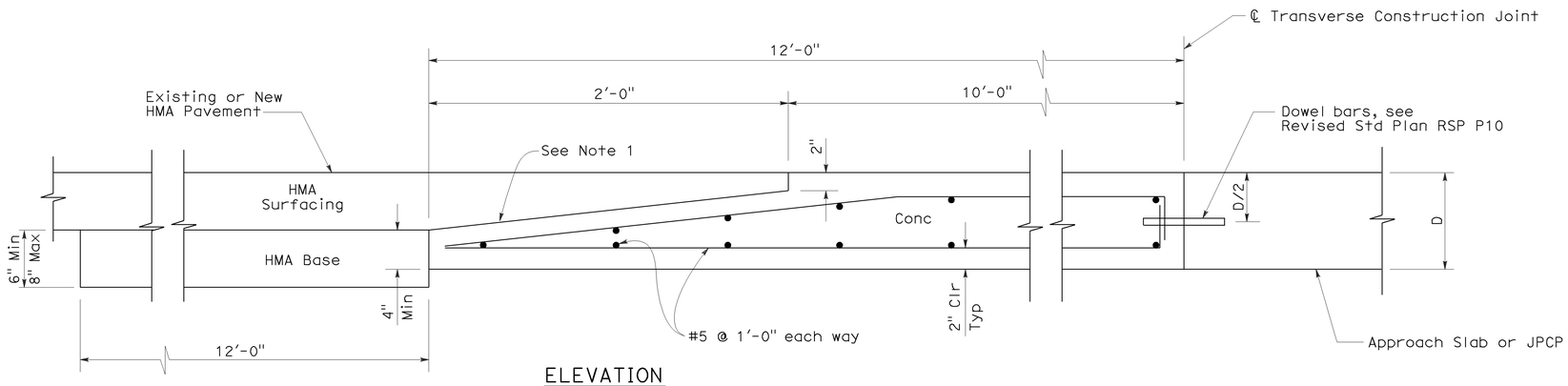

ELEVATION

CONCRETE PAVEMENT TO HOT MIXED ASPHALT PAVEMENT TRANSITION PANEL

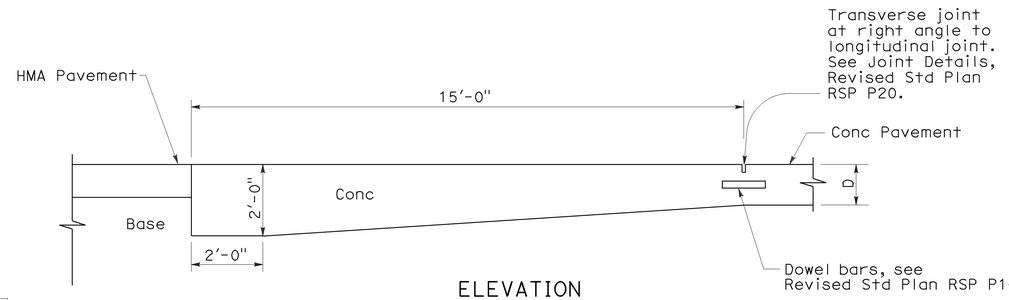

ELEVATION

PAVEMENT END ANCHOR

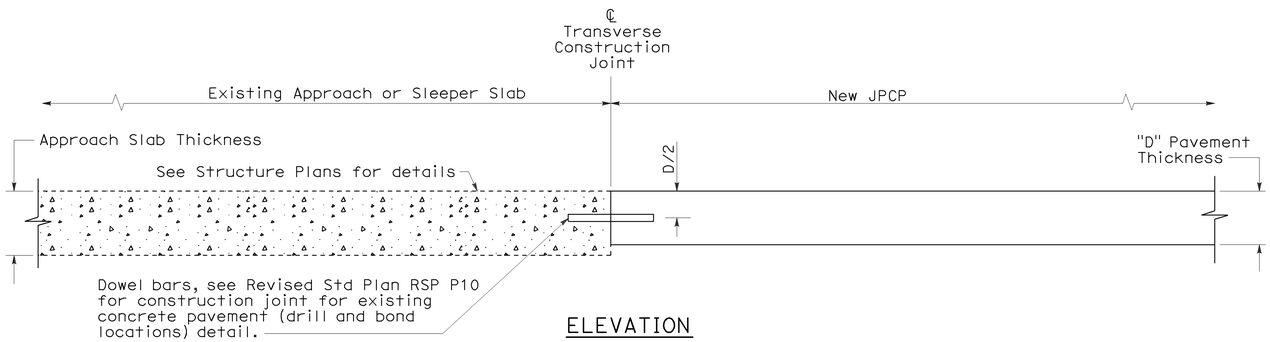

ELEVATION

NOTE:

1. Heavy broom finish.

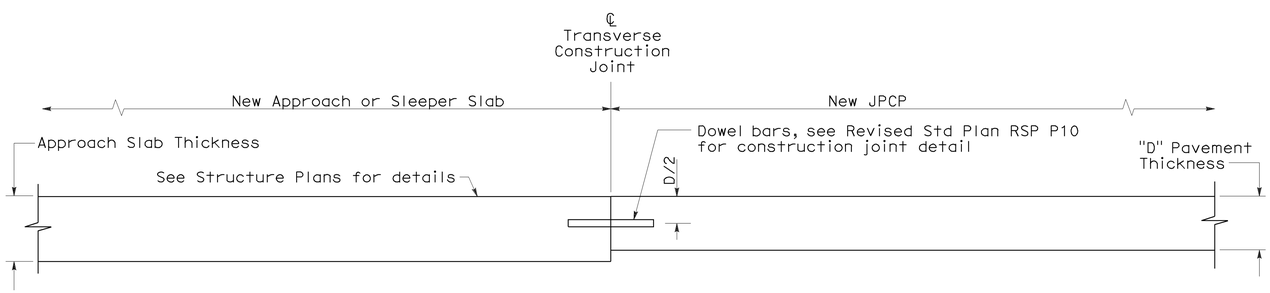

ELEVATION

CONCRETE PAVEMENT TRANSITION TO APPROACH OR SLEEPER SLAB

STATE OF CALIFORNIA
DEPARTMENT OF TRANSPORTATION

JOINTED PLAIN CONCRETE PAVEMENT-END PANEL PAVEMENT TRANSITIONS

NO SCALE

RSP P30 DATED MAY 15, 2009 SUPERSEDES STANDARD PLAN P30
DATED MAY 1, 2006 - PAGE 129 OF THE STANDARD PLANS BOOK DATED MAY 2006.

REVISED STANDARD PLAN RSP P30

2006 REVISED STANDARD PLAN RSP P30

5-8-09

DIST	COUNTY	ROUTE	POST MILES TOTAL PROJECT	SHEET NO.	TOTAL SHEETS
08	SBd	40	R28.1/R51.0	47	49

Randell D. Hiatt
REGISTERED CIVIL ENGINEER

June 6, 2008
PLANS APPROVAL DATE

REGISTERED PROFESSIONAL ENGINEER
Randell D. Hiatt
No. C50200
Exp. 6-30-09
CIVIL
STATE OF CALIFORNIA

The State of California or its officers or agents shall not be responsible for the accuracy or completeness of electronic copies of this plan sheet.

To accompany plans dated 11-07-11

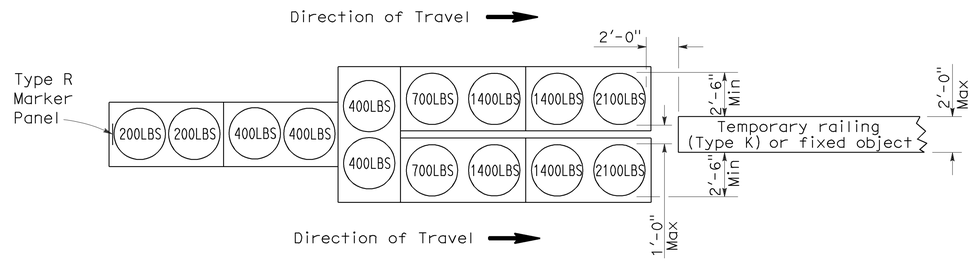

ARRAY 'TU14'

Approach speed 45 mph or more

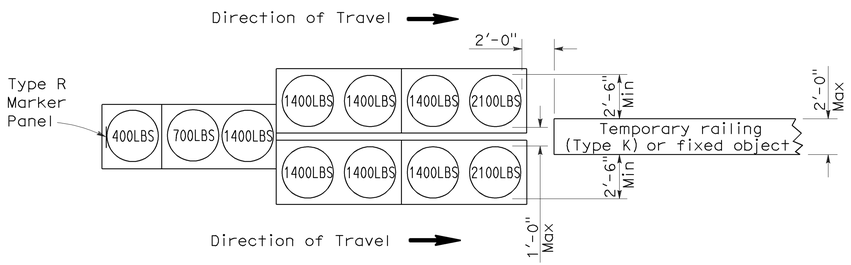

ARRAY 'TU11'

Approach speed less than 45 mph

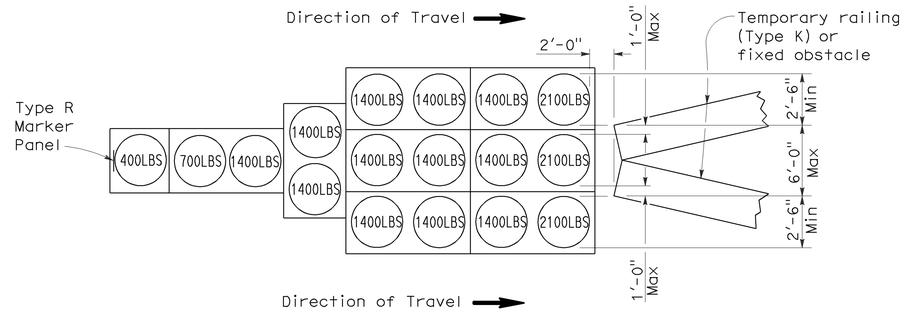

ARRAY 'TU17'

Approach speed less than 45 mph

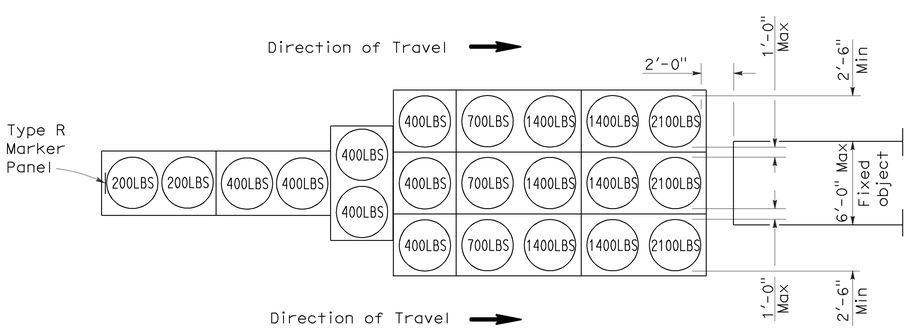

ARRAY 'TU21'

Approach speed 45 mph or more

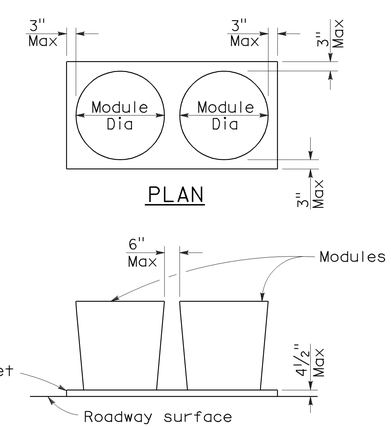

ELEVATION

CRASH CUSHION PALLET DETAIL

See Note 7

NOTES:

1. (XXX) Indicates sand filled module location and weight of sand in pounds for each module. Module spacing is based on the greater diameter of the module.
2. All sand weights are nominal.
3. Temporary crash cushion arrays shall not encroach on the traveled way.
4. Place the top of Type R marker panel 1" below the module lid.
5. Refer to Standard Plan A73B for marker details.
6. Approach speeds indicated conform to NCHRP 350 Report criteria.
7. Use of pallets is optional.

STATE OF CALIFORNIA
DEPARTMENT OF TRANSPORTATION

TEMPORARY CRASH CUSHION, SAND FILLED (UNIDIRECTIONAL)

NO SCALE

RSP T1A DATED JUNE 6, 2008 SUPERSEDES STANDARD PLAN T1A
DATED MAY 1, 2006 - PAGE 211 OF THE STANDARD PLANS BOOK DATED MAY 2006.

REVISED STANDARD PLAN RSP T1A

2006 REVISED STANDARD PLAN RSP T1A

5-15-08

DIST	COUNTY	ROUTE	POST MILES TOTAL PROJECT	SHEET NO.	TOTAL SHEETS
08	SBd	40	R28.1/R51.0	48	49

Randell D. Hiatt
REGISTERED CIVIL ENGINEER

June 6, 2008
PLANS APPROVAL DATE

REGISTERED PROFESSIONAL ENGINEER
Randell D. Hiatt
No. C50200
Exp. 6-30-09
CIVIL
STATE OF CALIFORNIA

The State of California or its officers or agents shall not be responsible for the accuracy or completeness of electronic copies of this plan sheet.

To accompany plans dated 11-07-11

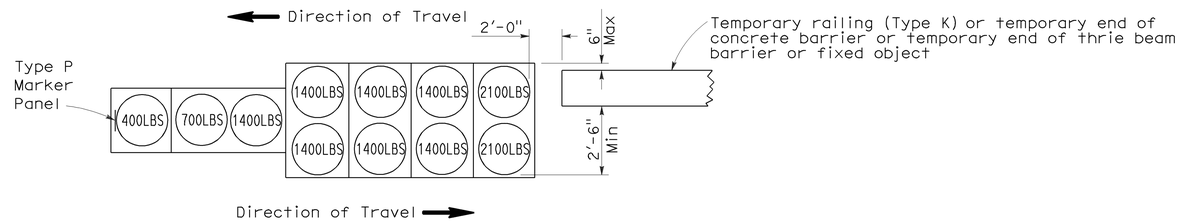

ARRAY 'TB11'

Approach speed less than 45 mph

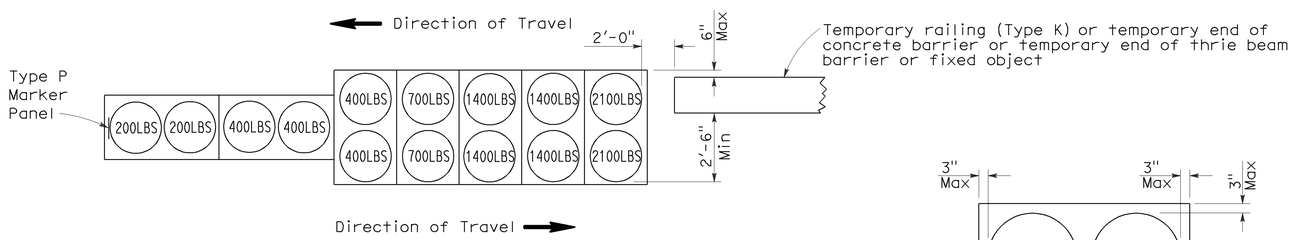

ARRAY 'TB14'

Approach speed 45 mph or more

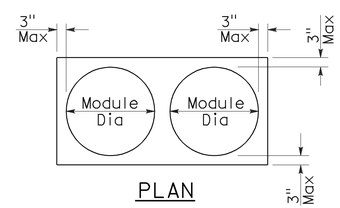

PLAN

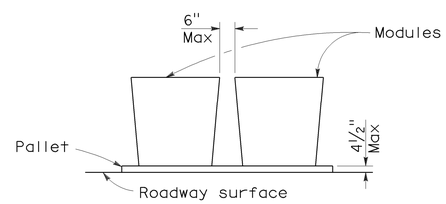

ELEVATION

CRASH CUSHION PALLET DETAIL

See Note 7

NOTES:

1. (XXX) Indicates sand filled module location and weight of sand in pounds for each module. Module spacing is based on the greater diameter of the module.
2. All sand weights are nominal.
3. Temporary crash cushion arrays shall not encroach on the traveled way.
4. Place the Type P marker panel so that the bottom of the panel rests upon the pallet.
5. Refer to Standard Plan A73B for marker details.
6. Approach speeds indicated conform to NCHRP 350 Report criteria.
7. Use of pallets is optional.

STATE OF CALIFORNIA
DEPARTMENT OF TRANSPORTATION

TEMPORARY CRASH CUSHION, SAND FILLED (BIDIRECTIONAL)

NO SCALE

RSP T1B DATED JUNE 6, 2008 SUPERSEDES STANDARD PLAN T1B
DATED MAY 1, 2006 - PAGE 212 OF THE STANDARD PLANS BOOK DATED MAY 2006.

REVISED STANDARD PLAN RSP T1B

2006 REVISED STANDARD PLAN RSP T1B

5-15-08

DIST	COUNTY	ROUTE	POST MILES TOTAL PROJECT	SHEET NO.	TOTAL SHEETS
08	SBd	40	R28.1/R51.0	49	49

Randell D. Hiatt
REGISTERED CIVIL ENGINEER

June 6, 2008
PLANS APPROVAL DATE

REGISTERED PROFESSIONAL ENGINEER
Randell D. Hiatt
No. C50200
Exp. 6-30-09
CIVIL
STATE OF CALIFORNIA

The State of California or its officers or agents shall not be responsible for the accuracy or completeness of electronic copies of this plan sheet.

To accompany plans dated 11-07-11

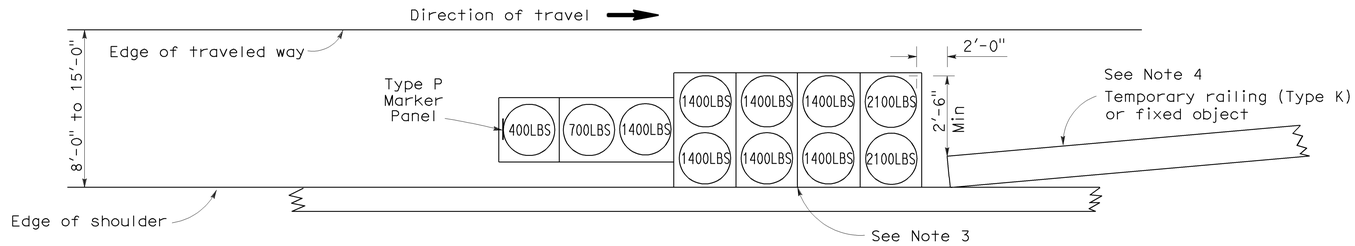

ARRAY 'TS11'

Approach speed less than 45 mph
See Note 9

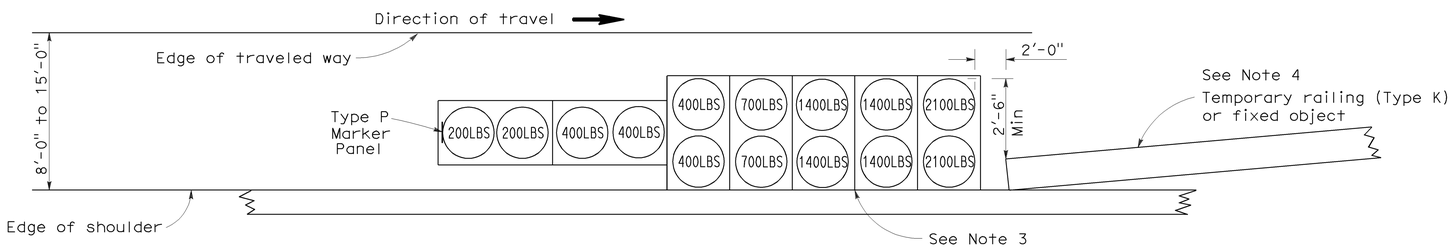

ARRAY 'TS14'

Approach speed 45 mph or more
See Note 9

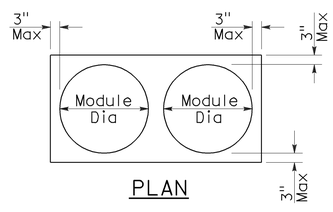

PLAN

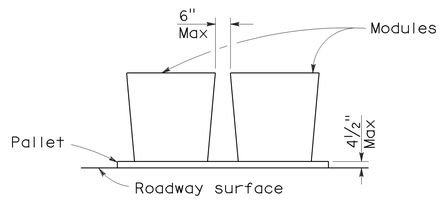

ELEVATION

CRASH CUSHION PALLET DETAIL

See Note 11

NOTES:

1. (XXX) Indicates sand filled module location and weight of sand in pounds for each module. Module spacing is based on the greater diameter of the module.
2. All sand weights are nominal.
3. The temporary crash cushion arrays shown on this plan shall be used only in locations where there will be traffic on one side of the temporary crash cushion array.
4. If the fixed object or approach end of the temporary railing is less than 15'-0" from the edge of traveled way, a temporary crash cushion is required in a construction or work zone.
5. Temporary crash cushion arrays shall not encroach on the traveled way.
6. Arrays for median shoulders shall conform to details shown on this plan for outside shoulders.
7. Place the Type P marker panel so that the bottom of the panel rests upon the pallet and faces traffic.
8. Refer to Standard Plan A73B for marker details.
9. For shoulder widths less than 8'-0", appropriate approved crash cushion protection, other than sand filled modules, shall be provided at fixed objects and at approach ends of temporary railing. The specific type of crash cushion shall be as shown on the project plans or as specified in the Special Provisions, or if not shown on the project plans or specified in the Special Provisions, shall be as approved by the Engineer.
10. Approach speeds indicated conform to NCHRP 350 Report criteria.
11. Use of pallets is optional.

STATE OF CALIFORNIA
DEPARTMENT OF TRANSPORTATION

TEMPORARY CRASH CUSHION, SAND FILLED (SHOULDER INSTALLATIONS)

NO SCALE

RSP T2 DATED JUNE 6, 2008 SUPERSEDES STANDARD PLAN T2
DATED MAY 1, 2006 - PAGE 213 OF THE STANDARD PLANS BOOK DATED MAY 2006.

REVISED STANDARD PLAN RSP T2

2006 REVISED STANDARD PLAN RSP T2

5-15-08