Dist	COUNTY	ROUTE	POST MILES TOTAL PROJECT	SHEET No.	TOTAL SHEETS
08	SBd	18	49.0/51.7	1	179

STATE OF CALIFORNIA

DEPARTMENT OF TRANSPORTATION

ACSTP-P018(051)E

PROJECT PLANS FOR CONSTRUCTION ON

STATE HIGHWAY

IN SAN BERNARDINO COUNTY IN BIG BEAR LAKE FROM PINE KNOT AVENUE TO STANFIELD CUTOFF ~~AT VARIOUS LOCATIONS~~ 4

TO BE SUPPLEMENTED BY STANDARD PLANS DATED 2010

INDEX OF PLANS

SHEET No.	DESCRIPTION
1	TITLE AND LOCATION MAP
2-3	LOCATIONS OF CONSTRUCTION
4	TYPICAL CROSS SECTIONS
5	KEY MAP AND INDEX
6-34	LAYOUTS
35-73	CONSTRUCTION DETAILS
74	TEMPORARY WATER POLLUTION CONTROL QUANTITIES
75-103	UTILITY PLANS
104	CONSTRUCTION AREA SIGNS
105	MOTORIST INFORMATION PLAN
106	STAGE CONSTRUCTION
107-108	TRAFFIC HANDLING PLAN AND QUANTITIES
109-116	PAVEMENT DELINEATION PLANS AND QUANTITIES
117-118	SIGN DETAILS AND QUANTITIES
119-122	SUMMARY OF QUANTITIES
123-145	ELECTRICAL PLANS
146-179	REVISED STANDARD PLANS

THE STANDARD PLANS LIST APPLICABLE TO THIS CONTRACT IS INCLUDED IN THE NOTICE TO BIDDERS AND SPECIAL PROVISIONS BOOK

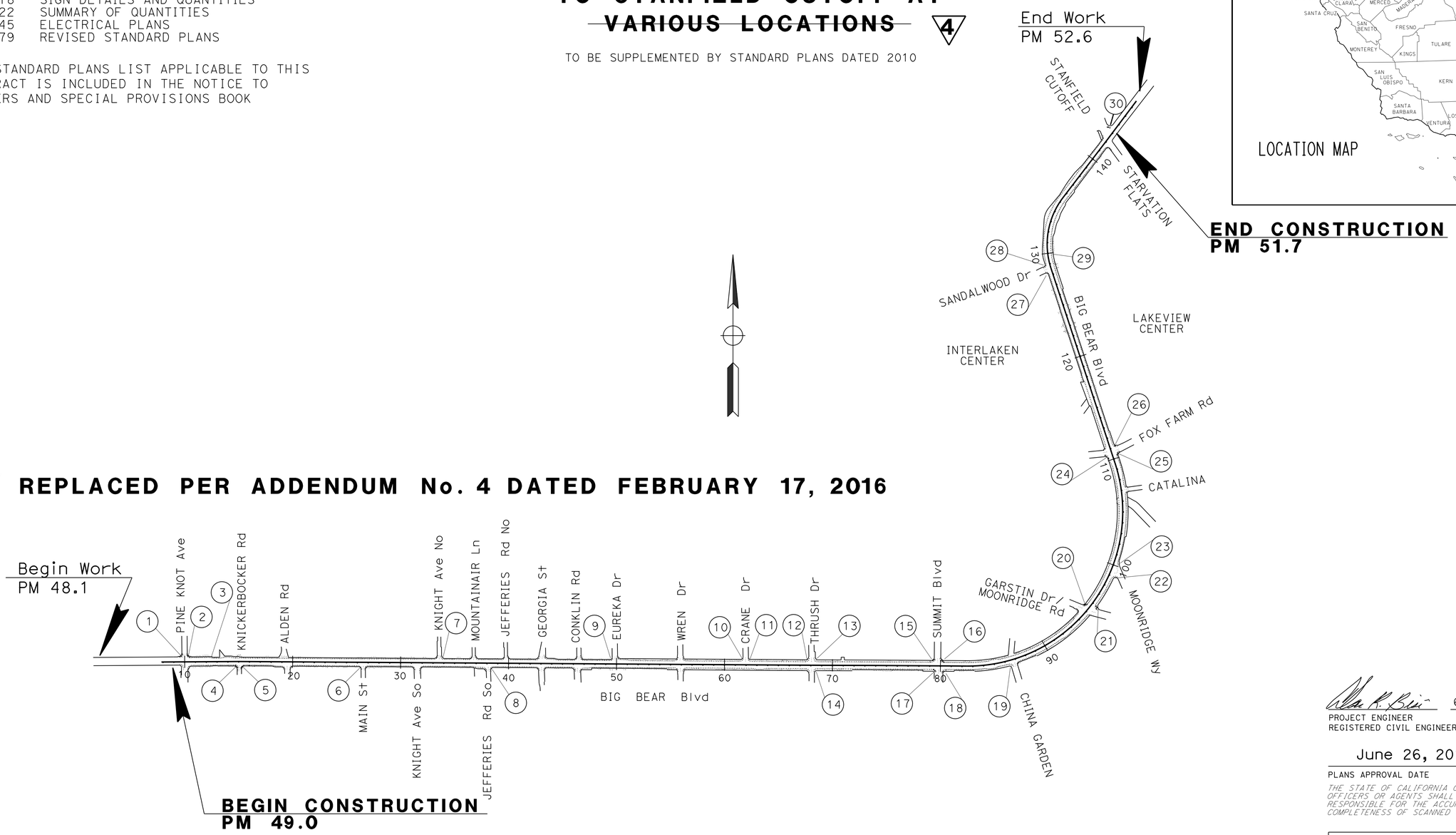

4 **REPLACED PER ADDENDUM No. 4 DATED FEBRUARY 17, 2016**

THE CONTRACTOR SHALL POSSESS THE CLASS (OR CLASSES) OF LICENSE AS SPECIFIED IN THE "NOTICE TO BIDDERS."

NO SCALE

PROJECT ENGINEER REGISTERED CIVIL ENGINEER — DATE 6-26-15

June 26, 2015
PLANS APPROVAL DATE

REGISTERED PROFESSIONAL ENGINEER — Alan R. Bisl — No. C-62808 — Exp. 6/30/16 — CIVIL — STATE OF CALIFORNIA

THE STATE OF CALIFORNIA OR ITS OFFICERS OR AGENTS SHALL NOT BE RESPONSIBLE FOR THE ACCURACY OR COMPLETENESS OF SCANNED COPIES OF THIS PLAN SHEET.

CONTRACT No.	08-0J9904
PROJECT ID	0800000327

PROJECT MANAGER: HONG VAN
DESIGN MANAGER: JAMAL ELSALEH

LAST REVISION 06-26-15 — DATE PLOTTED => 16-FEB-2016 — TIME PLOTTED => 15:43

Dist	COUNTY	ROUTE	POST MILES TOTAL PROJECT	SHEET No.	TOTAL SHEETS
08	SBd	18	49.0/51.7	6	179

REGISTERED CIVIL ENGINEER 6-26-15 DATE

6-26-15
PLANS APPROVAL DATE

REGISTERED PROFESSIONAL ENGINEER ALAN R. BISI No. 62808 Exp. 06-30-16 CIVIL STATE OF CALIFORNIA

THE STATE OF CALIFORNIA OR ITS OFFICERS OR AGENTS SHALL NOT BE RESPONSIBLE FOR THE ACCURACY OR COMPLETENESS OF SCANNED COPIES OF THIS PLAN SHEET.

NOTES:

1. FOR COMPLETE RIGHT OF WAY AND ACCURATE ACCESS DATA, SEE RIGHT OF WAY MAPS AT DISTRICT OFFICE.
2. REMOVAL OF EXISTING PCC SIDEWALK, CURB, AND GUTTER SHALL OCCUR AT CONSTRUCTION JOINT NEAREST SPECIFIED STATION AS SHOWN ON PLANS. THE SELECTED CONSTRUCTION JOINT SHALL FULLY ENCOMPASS AREA FOR NEEDED REPAIR, AS DIRECTED BY ENGINEER. STATIONING SHOWN ON PLANS IS FOR REFERENCE ONLY AND MAY BE ADJUSTED BY THE ENGINEER TO FIT CURRENT FIELD CONDITIONS.
3. SEE ELECTRICAL AND UTILITY PLANS FOR UTILITY AND ELECTRICAL APPURTENACES WORK.
4. ALL PULL BOXES WITHIN NEWLY CONSTRUCTED SIDEWALK IDENTIFIED AS BELONGING TO THE STATE SHALL BE ADJUSTED TO GRADE BY CONTRACTOR UNLESS OTHERWISE DIRECTED BY THE ENGINEER.

CONSTRUCTION NOTES:

2 CONSTRUCT RETANING CURB, SEE CONSTRUCTION DETAILS AND WORK LOCATION PLAN

3 CONSTRUCT CURB RAMP, SEE REVISED Std PLAN A88A AND CONSTRUCTION DETAILS

5 CONSTRUCT SIDEWALK, SEE CONSTRUCTION DETAILS AND WORK LOCATION PLAN

6 ADJUST SEWER MANHOLE TO GRADE

7 REMOVE AND CONSTRUCT DRIVEWAY APPROACH IN KIND, SEE CONSTRUCTION DETAILS

8 MODIFY Exist DI, SEE CONSTRUCTION DETAILS

CONSTRUCTION NOTES CONT:

9 REMOVE AND CONSTRUCT PARKWAY DRAIN, SEE CONSTRUCTION DETAILS

10 CONSTRUCT ROCK BLANKET, SEE CONSTRUCTION DETAILS

12 CONSTRUCT WARNING RAIL, SEE CONSTRUCTION DETAIL. SEE ROADWAY QUANTITIES FOR LIMITS.

13 ADJUST VALVE COVER TO GRADE

20 CONSTRUCT PCC CURB AND GUTTER, SEE CONSTRUCTION DETAIL

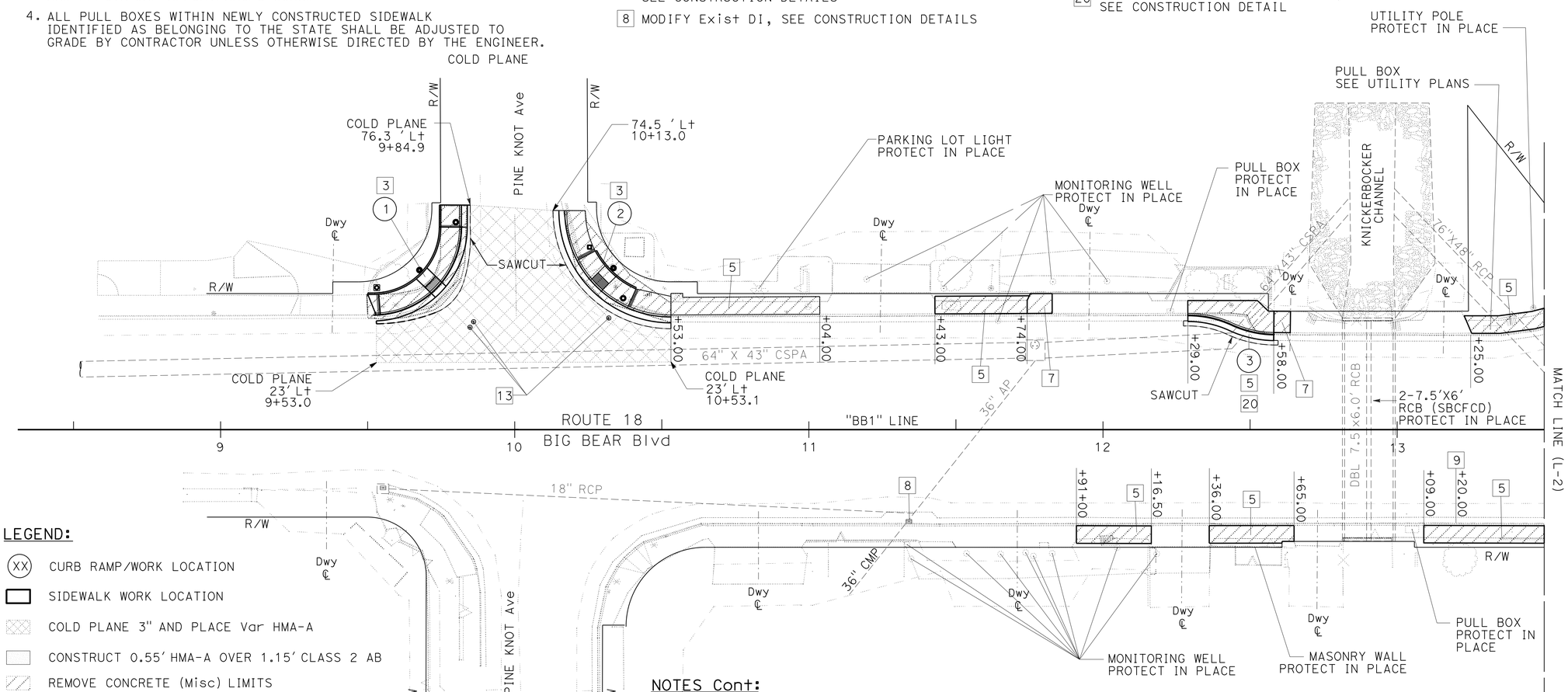

LEGEND:

(XX) CURB RAMP/WORK LOCATION

SIDEWALK WORK LOCATION

COLD PLANE 3" AND PLACE Var HMA-A

CONSTRUCT 0.55' HMA-A OVER 1.15' CLASS 2 AB

REMOVE CONCRETE (Misc) LIMITS

NOTES Cont:

5. WORK AREAS WITHIN STATE RIGHT OF WAY SHALL BE RESTORED TO ITS ORIGINAL CONDITION UPON COMPLETION OF EACH PHASE TO THE SATISFACTION OF THE ENGINEER. RESTORATION ITEMS SHALL INCLUDE, BUT NOT BE LIMITED TO, VEGETATION, IRRIGATION, AND HARDSCAPE.
6. CONTRACTOR SHALL PROTECT TREE ROOTS TO FULLEST EXTENT POSSIBLE. ROOTS IN CONFLICT WITH THE PROPOSED WORK MAY BE CUT TO FACILITATE NEEDED CONSTRUCTION.
7. THE CONTRACTOR SHALL NOTIFY THE RESIDENT ENGINEER 15-DAYS IN ADVANCE OF COMMENCING WORK WITHIN AN AREA THAT WILL AFFECT EXISTING BUS SERVICE.
8. FULL COMPENSATION FOR PROVIDING NOTICES TO PROPERTY OWNERS AND WORKING WITHIN STATE RIGHT-OF-WAY SHALL BE CONSIDERED AS INCLUDED IN THE CONTRACT PRICES PAID FOR THE VARIOUS ITEMS OF WORK INVOLVED AND NO ADDITIONAL COMPENSATION WILL BE ALLOWED THEREFORE.

NOTES Cont:

9. DELIVERY TRUCK ACCESS TO THE FOLLOWING FUEL STATIONS MUST BE MAINTAINED AT ALL TIMES.
   - APN 030-817-225 VALERO GAS STATION - (SBD-18 STA +/- 11+50)
   - APN 030-914-461 SHELL GAS STATION - (SBD-18 STA +/- 44+00)
   - APN 232-813-101 7/11 MARKET - (SBD-18 STA +/- 81+50)
   - APN 232-820-301 MOONRIDGE FUEL - (SBD-18 STA +/- 94+25)
   - APN 031-141-114 ARCO AM/PM MARKET - (SBD-18 STA +/- 141+00)

   IN THE EVENT THAT THIS ACCESS IS BLOCKED, THE CONTRACTOR SHALL REMOVE THE TEMPORARY PORTABLE DELINEATORS AND PROVIDE TEMPORARY ACCESS AS NEEDED TO ALLOW DELIVERIES. REMOVING AND REINSTALLING TEMPORARY ACCESS AT SAID LOCATIONS WILL BE PAID FOR AS AN EXTRA WORK.
10. CURB RAMP ACCESSIBILITY MUST BE MAINTAINED THROUGHOUT EVERY STAGE OF CONSTRUCTION. TEMPORARY AC PAVING SHALL BE USED TO MAINTAIN WHEEL CHAIR MOBILITY ACROSS SAW CUT JOINTS AND OTHER IRREGULAR SURFACES AS A RESULT OF CURB RAMP CONSTRUCTION. MAINTAINING SAID TEMPORARY PAVING WILL BE PAID FOR AS EXTRA WORK.

NOTES Cont:

11. DRIVEWAY CONSTRUCTION AT KNICKERBOCKER CHANNEL (SBD-18 STA 12+60) MUST BE COORDINATED WITH SAN BERNARDINO COUNTY FLOOD CONTROL DISTRICT AND SHALL NOT AFFECT MAINTENANCE OPERATIONS FOR SAID AGENCY. CONTRACTOR SHALL PROVIDE 48-HOURS NOTICE PRIOR TO COMMENCING CONSTRUCTION ACTIVITIES AT SAID LOCATION.
    CONTACT INFORMATION:
    MIKE FISHER, MAINTENANCE SUPERVISOR,
    ZONE 6-MOUNTAIN REGION
    OFFICE: (909) 387-8020
    CELL: (909) 771-4167

4 REPLACED PER ADDENDUM No. 4 DATED FEBRUARY 17, 2016

LAYOUT
SCALE 1"=20'
L-1

REVISED BY | DATE REVISED
MOHAMMAD ABDRABOH | ALAN R. BISI
CALCULATED-DESIGNED BY | CHECKED BY
FUNCTIONAL SUPERVISOR: JUSTINE NIU

STATE OF CALIFORNIA - DEPARTMENT OF TRANSPORTATION
Caltrans® DESIGN

LAST REVISION 06-26-15 | DATE PLOTTED => 16-FEB-2016 | TIME PLOTTED => 15:43

Dist	COUNTY	ROUTE	POST MILES TOTAL PROJECT	SHEET No.	TOTAL SHEETS
08	SBd	18	49.0/51.7	7	179

REGISTERED CIVIL ENGINEER 6-26-15 DATE

6-26-15
PLANS APPROVAL DATE

REGISTERED PROFESSIONAL ENGINEER ALAN R. BISI No. 62808 Exp. 06-30-16 CIVIL STATE OF CALIFORNIA

THE STATE OF CALIFORNIA OR ITS OFFICERS OR AGENTS SHALL NOT BE RESPONSIBLE FOR THE ACCURACY OR COMPLETENESS OF SCANNED COPIES OF THIS PLAN SHEET.

4

NOTE:

FOR ACCURATE RIGHT OF WAY DATA, CONTACT
RIGHT OF WAY ENGINEERING AT THE DISTRICT OFFICE.

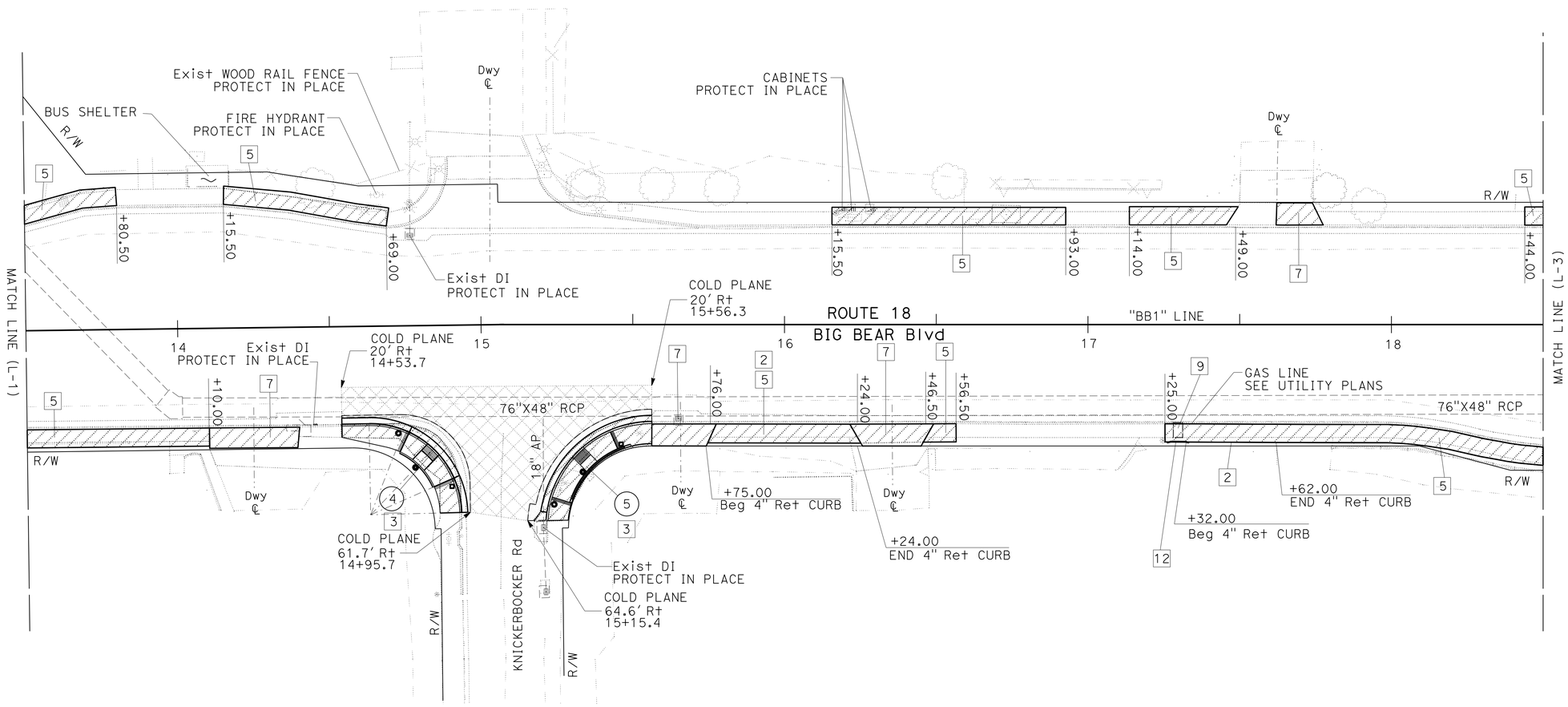

4 **REPLACED PER ADDENDUM No. 4 DATED FEBRUARY 17, 2016**

LAYOUT
SCALE 1"=20'

L-2

STATE OF CALIFORNIA - DEPARTMENT OF TRANSPORTATION
Caltrans **DESIGN**

FUNCTIONAL SUPERVISOR: JUSTINE NIU
CALCULATED-DESIGNED BY: MOHAMMAD ABDRABOH
CHECKED BY: ALAN R. BISI
REVISED BY
DATE REVISED

LAST REVISION 06-26-15
DATE PLOTTED => 16-FEB-2016
TIME PLOTTED => 15:43

Dist	COUNTY	ROUTE	POST MILES TOTAL PROJECT	SHEET No.	TOTAL SHEETS
08	SBd	18	49.0/51.7	8	179

REGISTERED CIVIL ENGINEER 6-26-15 DATE

6-26-15
PLANS APPROVAL DATE

REGISTERED PROFESSIONAL ENGINEER ALAN R. BISI No. 62808 Exp. 06-30-16 CIVIL STATE OF CALIFORNIA

THE STATE OF CALIFORNIA OR ITS OFFICERS OR AGENTS SHALL NOT BE RESPONSIBLE FOR THE ACCURACY OR COMPLETENESS OF SCANNED COPIES OF THIS PLAN SHEET.

4

NOTE:

FOR ACCURATE RIGHT OF WAY DATA, CONTACT RIGHT OF WAY ENGINEERING AT THE DISTRICT OFFICE.

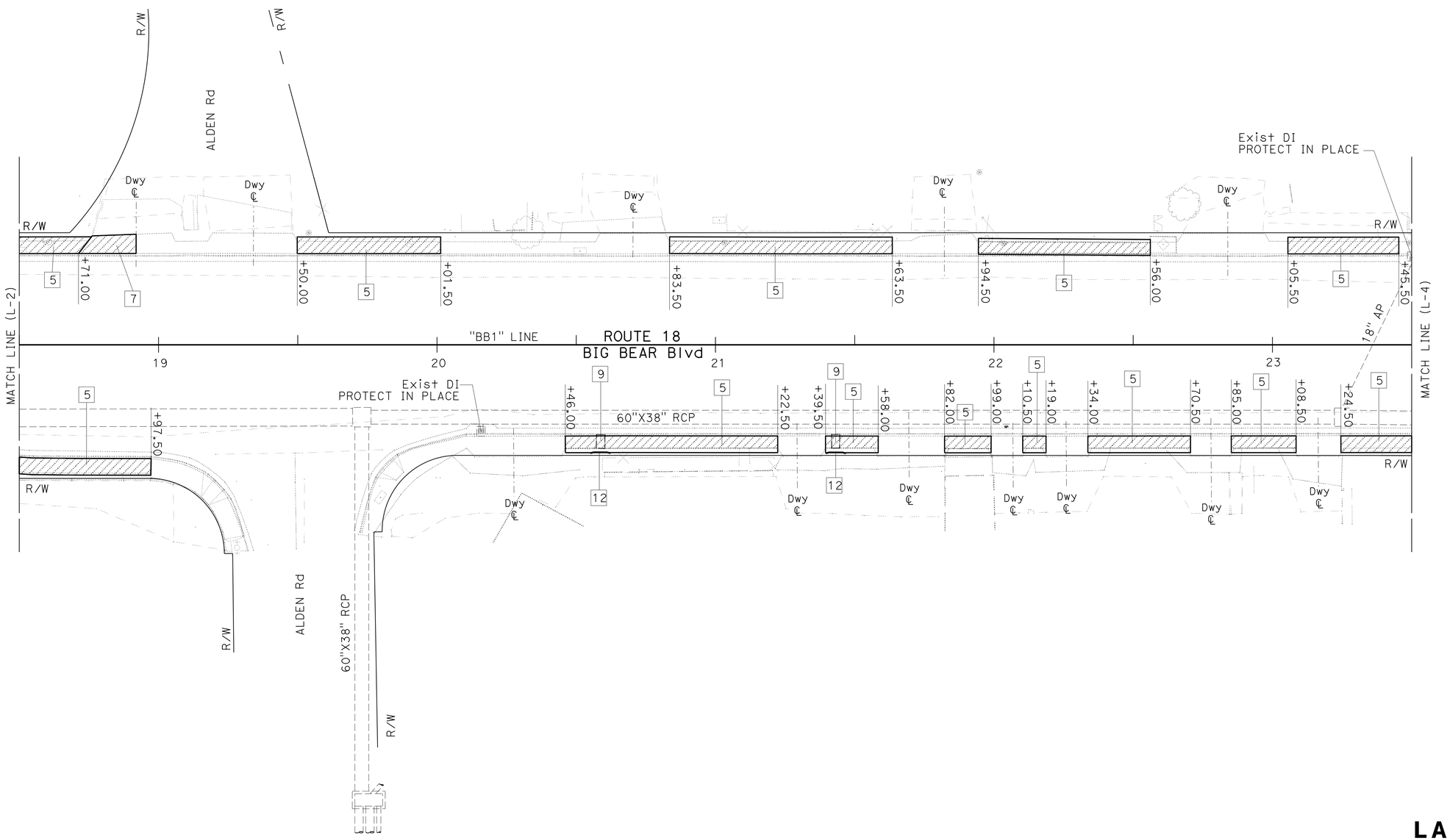

4 **REPLACED PER ADDENDUM No. 4 DATED FEBRUARY 17, 2016**

LAYOUT

SCALE 1"=20'

L-3

STATE OF CALIFORNIA - DEPARTMENT OF TRANSPORTATION
Caltrans
DESIGN

FUNCTIONAL SUPERVISOR: JUSTINE NIU
CALCULATED-DESIGNED BY: MOHAMMAD ABDRABOH
CHECKED BY: ALAN R. BISI
REVISED BY
DATE REVISED

LAST REVISION 06-26-15
DATE PLOTTED => 16-FEB-2016
TIME PLOTTED => 15:43

Dist	COUNTY	ROUTE	POST MILES TOTAL PROJECT	SHEET No.	TOTAL SHEETS
08	SBd	18	49.0/51.7	9	179

REGISTERED CIVIL ENGINEER 6-26-15 DATE

6-26-15
PLANS APPROVAL DATE

REGISTERED PROFESSIONAL ENGINEER ALAN R. BISI No. 62808 Exp. 06-30-16 CIVIL STATE OF CALIFORNIA

THE STATE OF CALIFORNIA OR ITS OFFICERS OR AGENTS SHALL NOT BE RESPONSIBLE FOR THE ACCURACY OR COMPLETENESS OF SCANNED COPIES OF THIS PLAN SHEET.

NOTE:

FOR ACCURATE RIGHT OF WAY DATA, CONTACT RIGHT OF WAY ENGINEERING AT THE DISTRICT OFFICE.

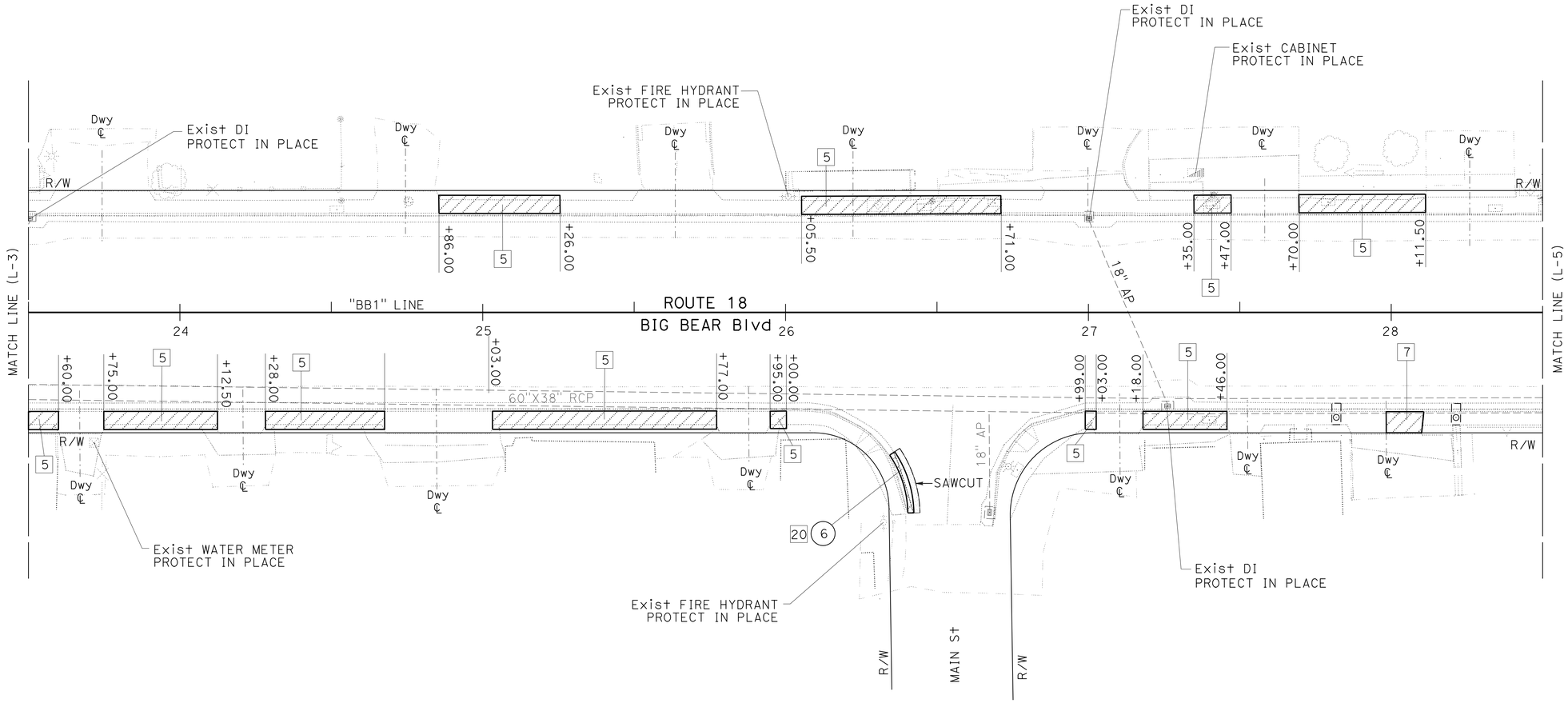

4 REPLACED PER ADDENDUM No. 4 DATED FEBRUARY 17, 2016

LAYOUT

SCALE 1"=20'

L-4

STATE OF CALIFORNIA - DEPARTMENT OF TRANSPORTATION

Caltrans

DESIGN

FUNCTIONAL SUPERVISOR: JUSTINE NIU

CALCULATED-DESIGNED BY: MOHAMMAD ABDRABOH

CHECKED BY: ALAN R. BISI

REVISED BY

DATE REVISED

LAST REVISION 06-26-15

DATE PLOTTED => 16-FEB-2016

TIME PLOTTED => 15:43

Dist	COUNTY	ROUTE	POST MILES TOTAL PROJECT	SHEET No.	TOTAL SHEETS
08	SBd	18	49.0/51.7	10	179

REGISTERED CIVIL ENGINEER 6-26-15 DATE

6-26-15
PLANS APPROVAL DATE

REGISTERED PROFESSIONAL ENGINEER ALAN R. BISI No. 62808 Exp. 06-30-16 CIVIL STATE OF CALIFORNIA

THE STATE OF CALIFORNIA OR ITS OFFICERS OR AGENTS SHALL NOT BE RESPONSIBLE FOR THE ACCURACY OR COMPLETENESS OF SCANNED COPIES OF THIS PLAN SHEET.

4

NOTE:

FOR ACCURATE RIGHT OF WAY DATA, CONTACT
RIGHT OF WAY ENGINEERING AT THE DISTRICT OFFICE.

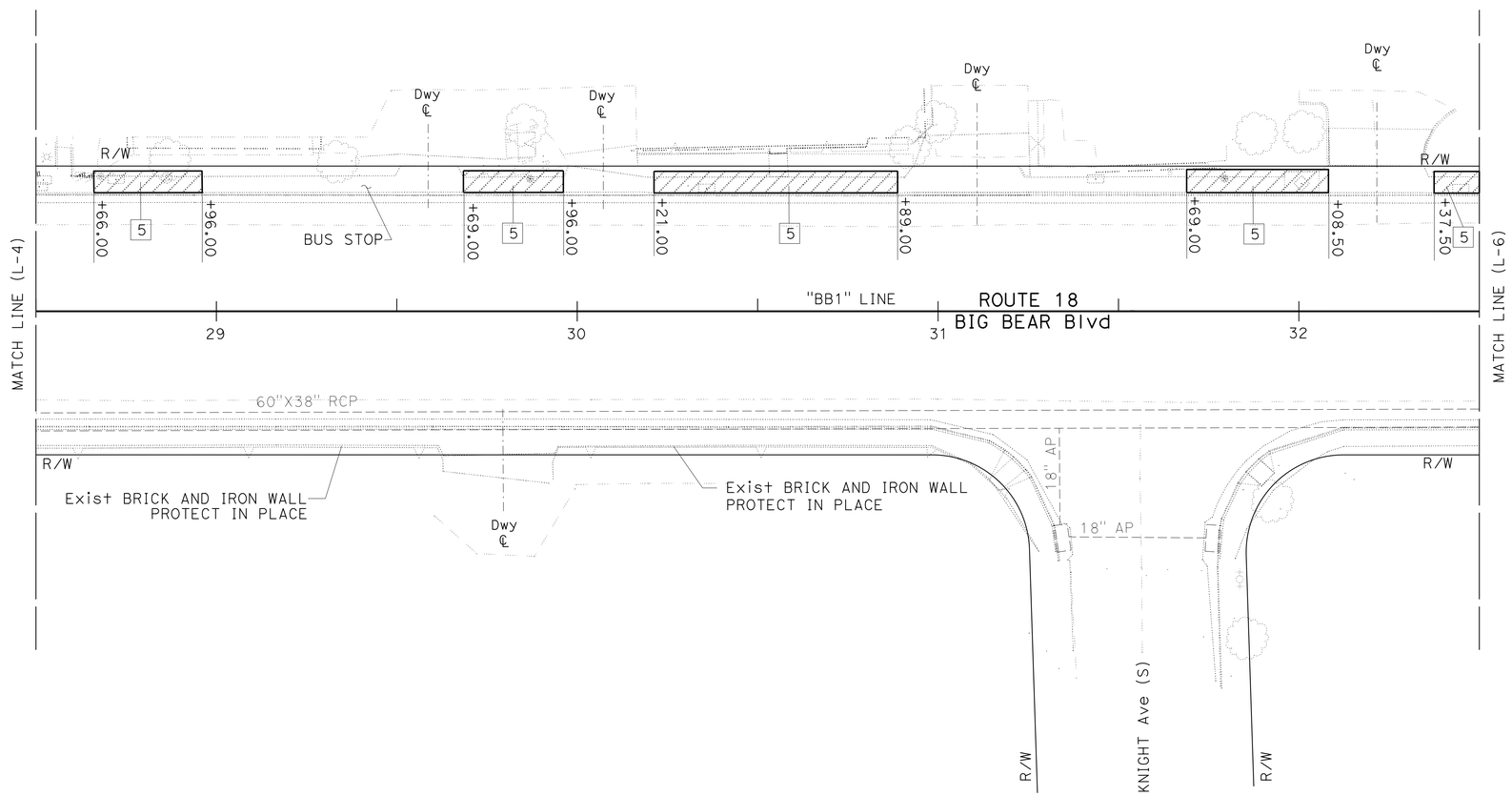

4 **REPLACED PER ADDENDUM No. 4 DATED FEBRUARY 17, 2016**

LAYOUT
SCALE 1"=20'

L-5

STATE OF CALIFORNIA - DEPARTMENT OF TRANSPORTATION
Caltrans
DESIGN

FUNCTIONAL SUPERVISOR: JUSTINE NIU
CALCULATED-DESIGNED BY: MOHAMMAD ABDRABOH
CHECKED BY: ALAN R. BISI
REVISED BY
DATE REVISED

LAST REVISION 06-26-15
DATE PLOTTED => 16-FEB-2016
TIME PLOTTED => 15:43

Dist	COUNTY	ROUTE	POST MILES TOTAL PROJECT	SHEET No.	TOTAL SHEETS
08	SBd	18	49.0/51.7	11	179

REGISTERED CIVIL ENGINEER 6-26-15 DATE

6-26-15
PLANS APPROVAL DATE

REGISTERED PROFESSIONAL ENGINEER ALAN R. BISI No. 62808 Exp. 06-30-16 CIVIL STATE OF CALIFORNIA

THE STATE OF CALIFORNIA OR ITS OFFICERS OR AGENTS SHALL NOT BE RESPONSIBLE FOR THE ACCURACY OR COMPLETENESS OF SCANNED COPIES OF THIS PLAN SHEET.

NOTE:

FOR ACCURATE RIGHT OF WAY DATA, CONTACT RIGHT OF WAY ENGINEERING AT THE DISTRICT OFFICE.

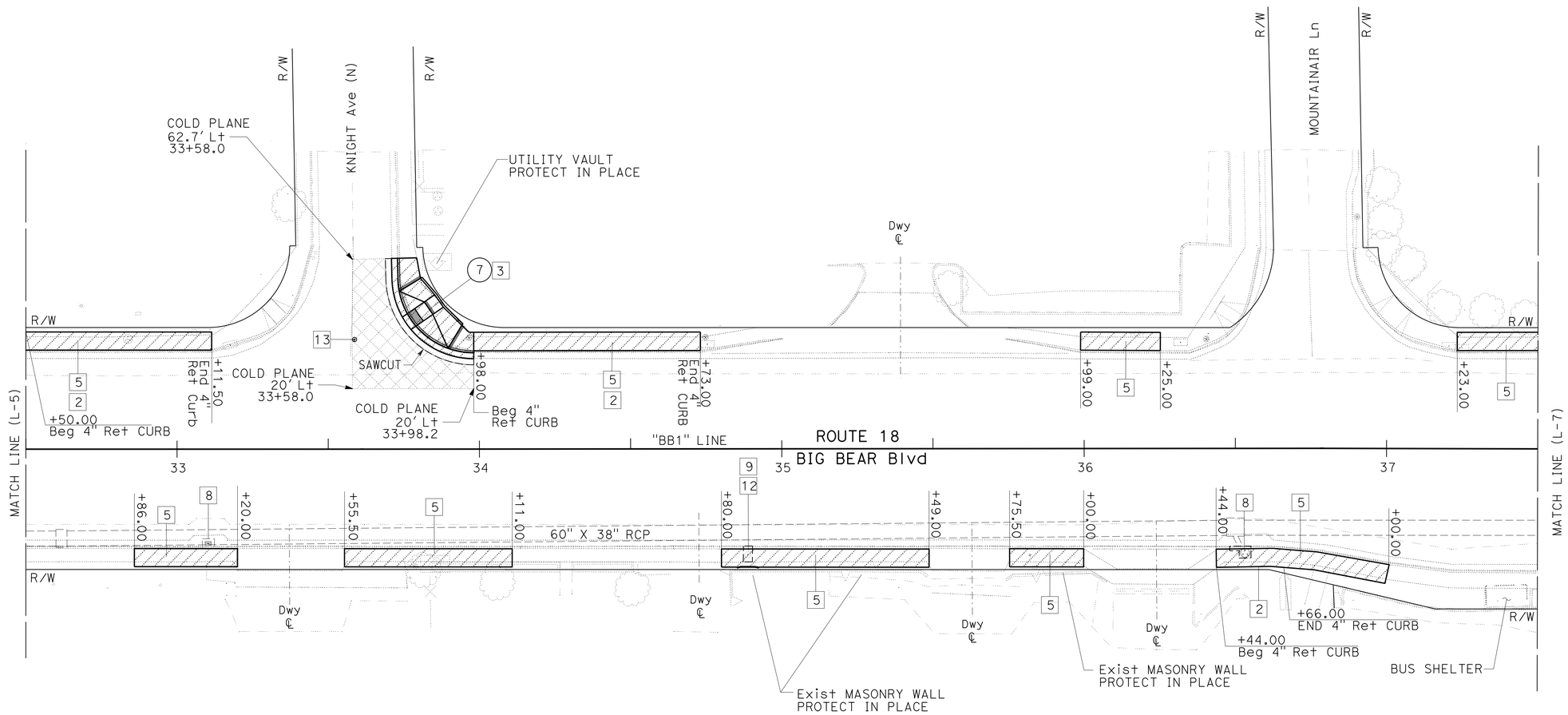

4 **REPLACED PER ADDENDUM No. 4 DATED FEBRUARY 17, 2016**

LAYOUT

SCALE 1"=20'

L-6

STATE OF CALIFORNIA - DEPARTMENT OF TRANSPORTATION

DESIGN

FUNCTIONAL SUPERVISOR: JUSTINE NIU

CALCULATED-DESIGNED BY: MOHAMMAD ABDRABOH

CHECKED BY: ALAN R. BISI

REVISED BY

DATE REVISED

LAST REVISION 06-26-15

DATE PLOTTED => 16-FEB-2016

TIME PLOTTED => 15:43

Dist	COUNTY	ROUTE	POST MILES TOTAL PROJECT	SHEET No.	TOTAL SHEETS
08	SBd	18	49.0/51.7	12	179

REGISTERED CIVIL ENGINEER 6-26-15 DATE

6-26-15
PLANS APPROVAL DATE

REGISTERED PROFESSIONAL ENGINEER ALAN R. BISI No. 62808 Exp. 06-30-16 CIVIL STATE OF CALIFORNIA

THE STATE OF CALIFORNIA OR ITS OFFICERS OR AGENTS SHALL NOT BE RESPONSIBLE FOR THE ACCURACY OR COMPLETENESS OF SCANNED COPIES OF THIS PLAN SHEET.

4

NOTE:

FOR ACCURATE RIGHT OF WAY DATA, CONTACT RIGHT OF WAY ENGINEERING AT THE DISTRICT OFFICE.

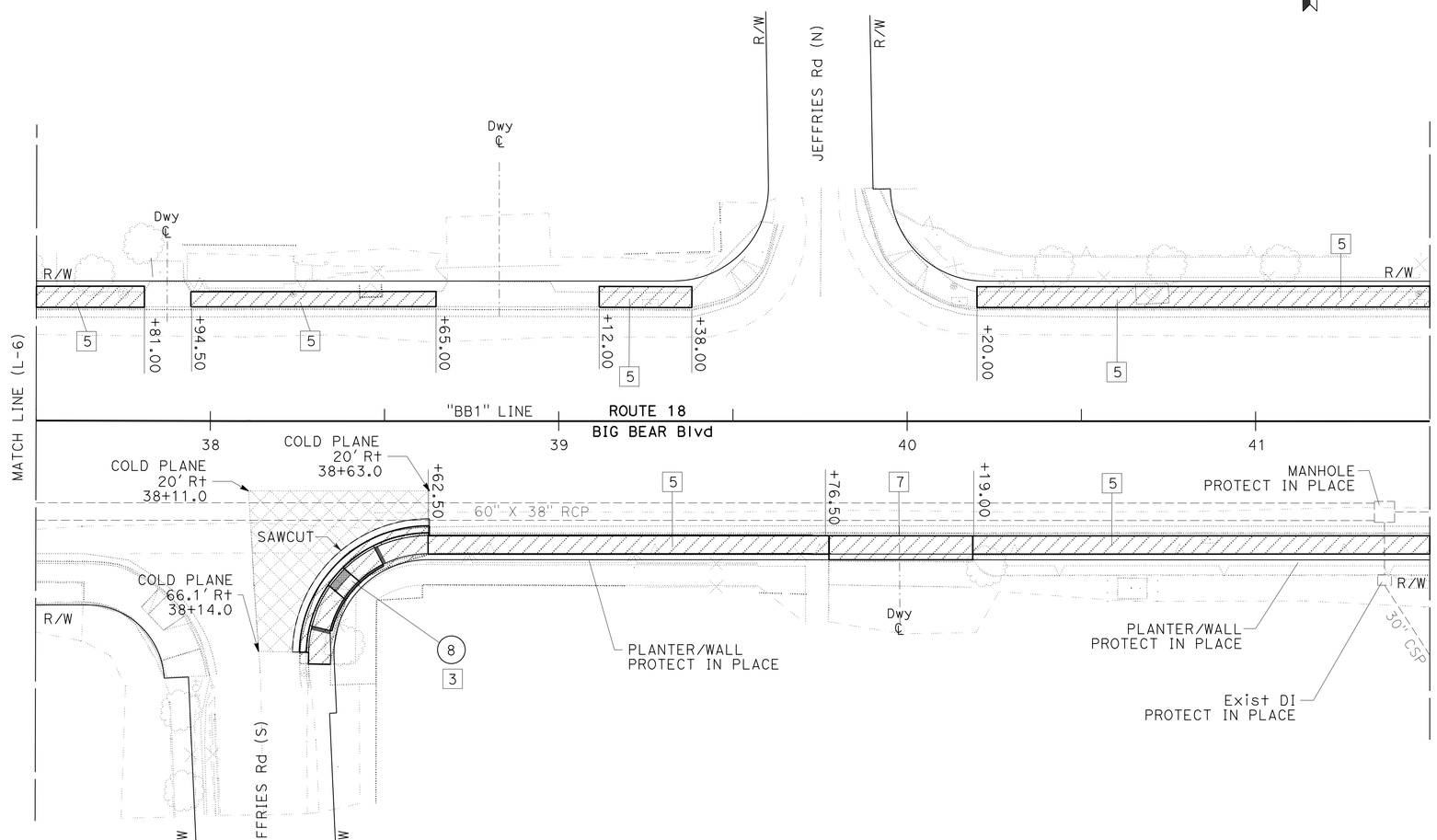

4 **REPLACED PER ADDENDUM No. 4 DATED FEBRUARY 17, 2016**

LAYOUT
SCALE 1"=20'

L-7

STATE OF CALIFORNIA - DEPARTMENT OF TRANSPORTATION
Caltrans
DESIGN

FUNCTIONAL SUPERVISOR: JUSTINE NIU
CALCULATED-DESIGNED BY: MOHAMMAD ABDRABOH
CHECKED BY: ALAN R. BISI
REVISED BY
DATE REVISED

LAST REVISION 06-26-15 | DATE PLOTTED => 16-FEB-2016 | TIME PLOTTED => 15:43

Dist	COUNTY	ROUTE	POST MILES TOTAL PROJECT	SHEET No.	TOTAL SHEETS
08	SBd	18	49.0/51.7	13	179

REGISTERED CIVIL ENGINEER 6-26-15 DATE

6-26-15
PLANS APPROVAL DATE

REGISTERED PROFESSIONAL ENGINEER ALAN R. BISI No. 62808 Exp. 06-30-16 CIVIL STATE OF CALIFORNIA

THE STATE OF CALIFORNIA OR ITS OFFICERS OR AGENTS SHALL NOT BE RESPONSIBLE FOR THE ACCURACY OR COMPLETENESS OF SCANNED COPIES OF THIS PLAN SHEET.

4

NOTE:

FOR ACCURATE RIGHT OF WAY DATA, CONTACT
RIGHT OF WAY ENGINEERING AT THE DISTRICT OFFICE.

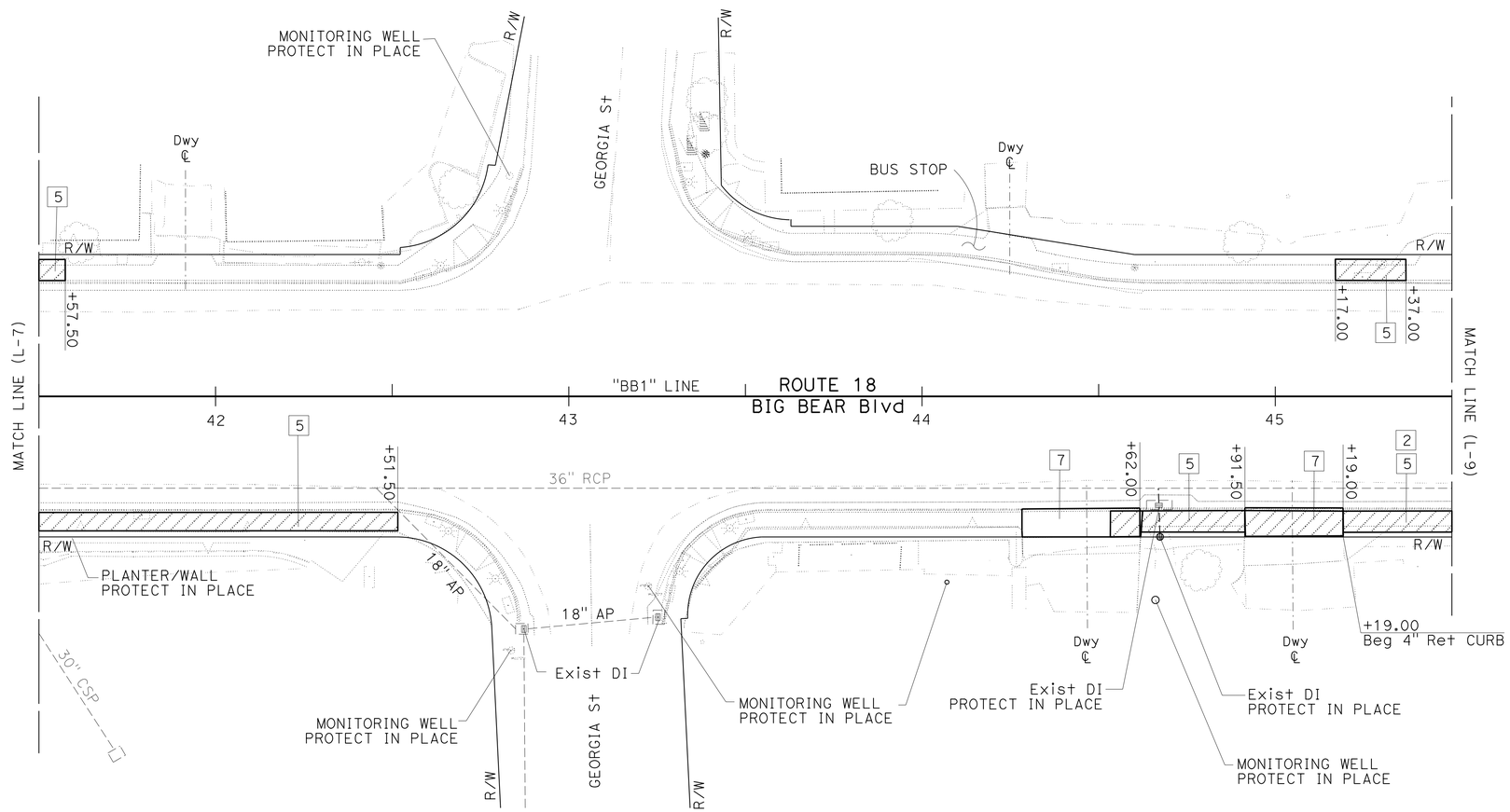

4 **REPLACED PER ADDENDUM No. 4 DATED FEBRUARY 17, 2016**

LAYOUT
SCALE 1"=20'

L-8

STATE OF CALIFORNIA - DEPARTMENT OF TRANSPORTATION
Caltrans
DESIGN
FUNCTIONAL SUPERVISOR: JUSTINE NIU
CALCULATED-DESIGNED BY: MOHAMMAD ABDRABOH
CHECKED BY: ALAN R. BISI
REVISED BY
DATE REVISED

LAST REVISION 06-26-15
DATE PLOTTED => 16-FEB-2016
TIME PLOTTED => 15:43

Dist	COUNTY	ROUTE	POST MILES TOTAL PROJECT	SHEET No.	TOTAL SHEETS
08	SBd	18	49.0/51.7	14	179

REGISTERED CIVIL ENGINEER 6-26-15 DATE

6-26-15
PLANS APPROVAL DATE

REGISTERED PROFESSIONAL ENGINEER ALAN R. BISI No. 62808 Exp. 06-30-16 CIVIL STATE OF CALIFORNIA

THE STATE OF CALIFORNIA OR ITS OFFICERS OR AGENTS SHALL NOT BE RESPONSIBLE FOR THE ACCURACY OR COMPLETENESS OF SCANNED COPIES OF THIS PLAN SHEET.

NOTE:

FOR ACCURATE RIGHT OF WAY DATA, CONTACT RIGHT OF WAY ENGINEERING AT THE DISTRICT OFFICE.

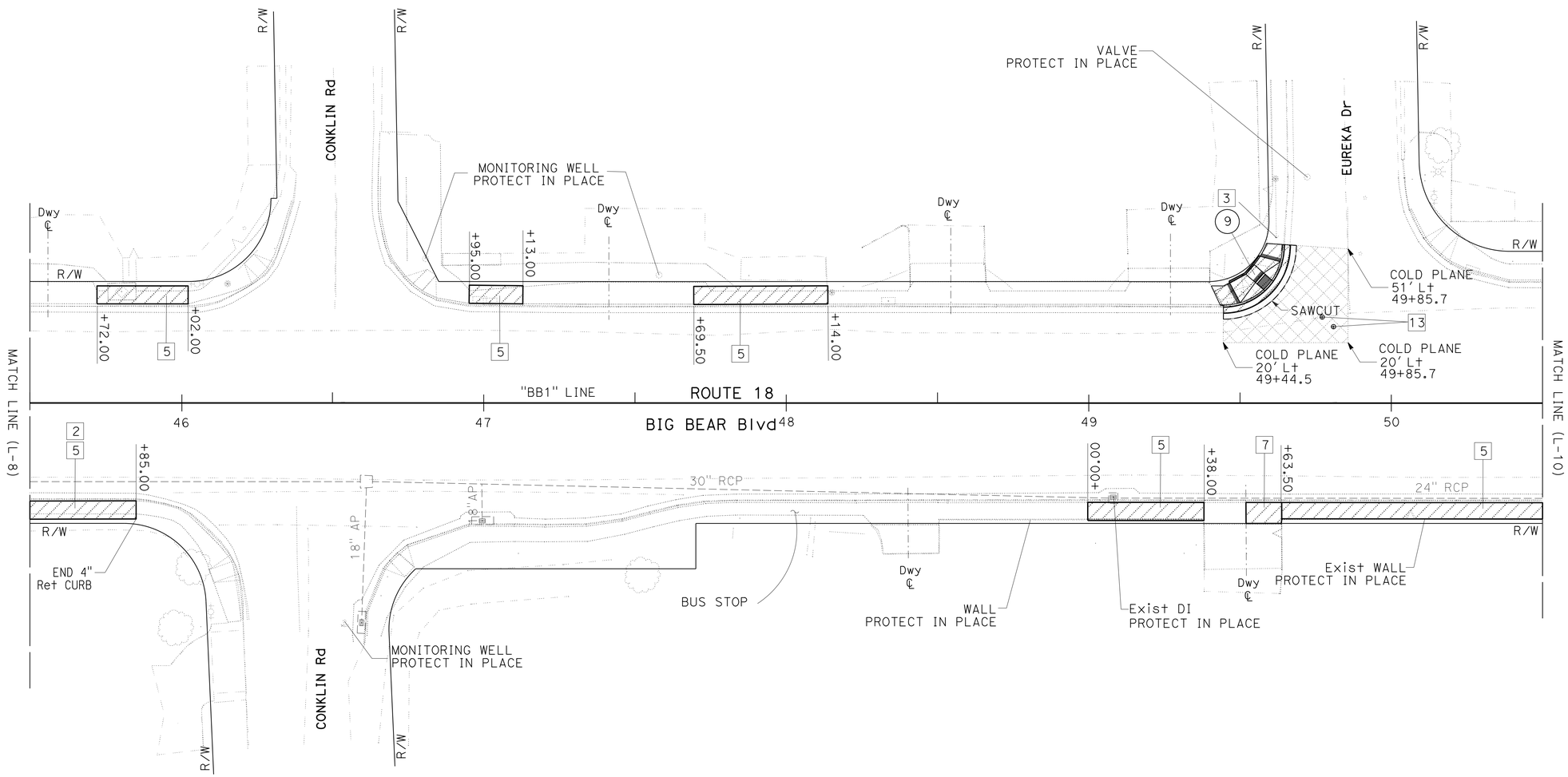

4 **REPLACED PER ADDENDUM No. 4 DATED FEBRUARY 17, 2016**

LAYOUT

SCALE 1"=20'

L-9

STATE OF CALIFORNIA - DEPARTMENT OF TRANSPORTATION

Caltrans® **DESIGN**

FUNCTIONAL SUPERVISOR: JUSTINE NIU

CALCULATED-DESIGNED BY: MOHAMMAD ABDRABOH

CHECKED BY: ALAN R. BISI

REVISED BY

DATE REVISED

LAST REVISION 06-26-15

DATE PLOTTED => 16-FEB-2016

TIME PLOTTED => 15:43

Dist	COUNTY	ROUTE	POST MILES TOTAL PROJECT	SHEET No.	TOTAL SHEETS
08	SBd	18	49.0/51.7	15	179

REGISTERED CIVIL ENGINEER 6-26-15 DATE

6-26-15
PLANS APPROVAL DATE

REGISTERED PROFESSIONAL ENGINEER ALAN R. BISI No. 62808 Exp. 06-30-16 CIVIL STATE OF CALIFORNIA

THE STATE OF CALIFORNIA OR ITS OFFICERS OR AGENTS SHALL NOT BE RESPONSIBLE FOR THE ACCURACY OR COMPLETENESS OF SCANNED COPIES OF THIS PLAN SHEET.

NOTE:

FOR ACCURATE RIGHT OF WAY DATA, CONTACT
RIGHT OF WAY ENGINEERING AT THE DISTRICT OFFICE.

4

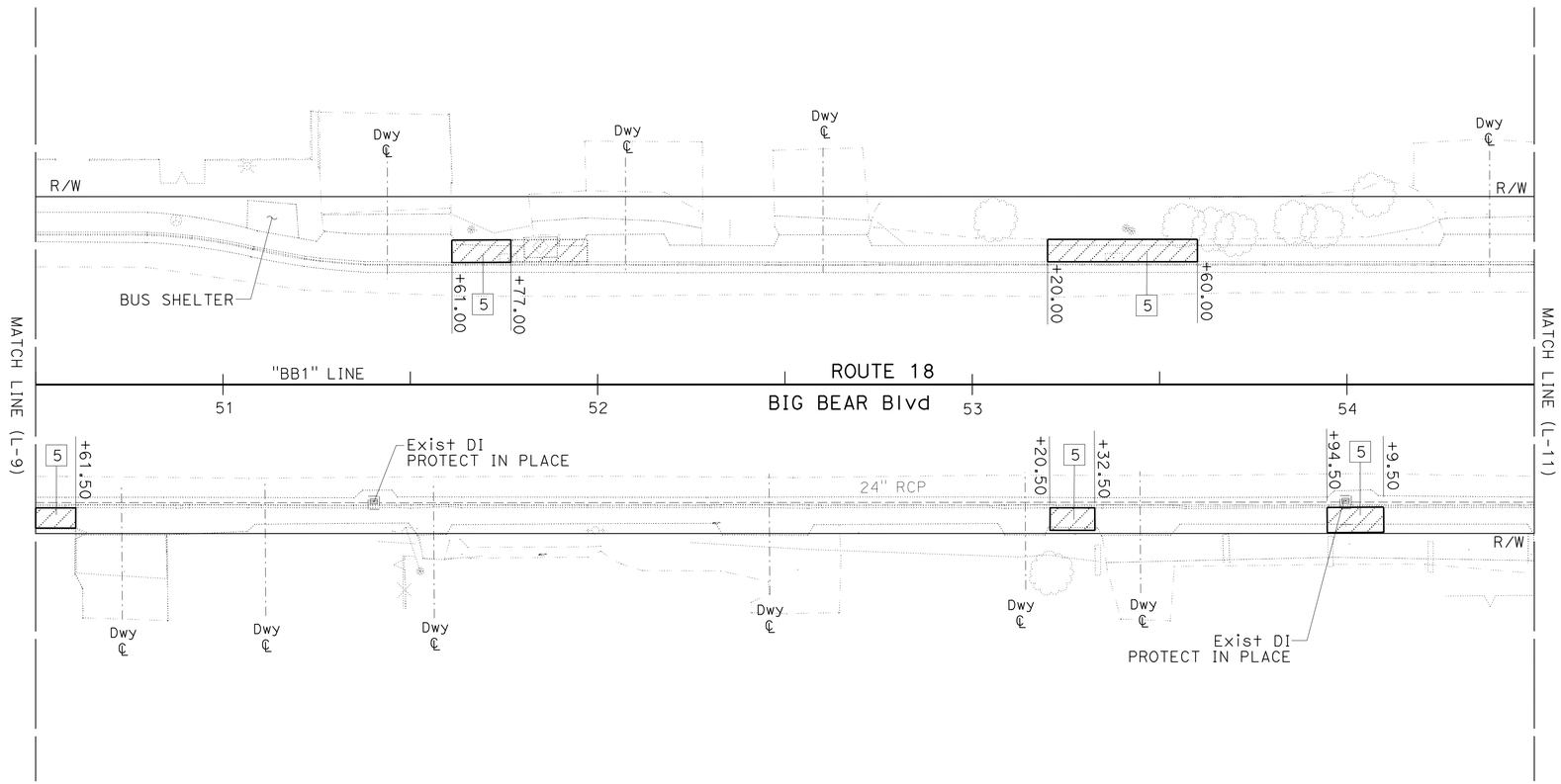

4 **REPLACED PER ADDENDUM No. 4 DATED FEBRUARY 17, 2016**

LAYOUT

SCALE 1"=20'

L-10

STATE OF CALIFORNIA - DEPARTMENT OF TRANSPORTATION
Caltrans
DESIGN

FUNCTIONAL SUPERVISOR: JUSTINE NIU
CALCULATED-DESIGNED BY: MOHAMMAD ABDRABOH
CHECKED BY: ALAN R. BISI
REVISED BY
DATE REVISED

LAST REVISION 06-26-15
DATE PLOTTED => 16-FEB-2016
TIME PLOTTED => 15:43

Dist	COUNTY	ROUTE	POST MILES TOTAL PROJECT	SHEET No.	TOTAL SHEETS
08	SBd	18	49.0/51.7	16	179

REGISTERED CIVIL ENGINEER 6-26-15 DATE

6-26-15
PLANS APPROVAL DATE

REGISTERED PROFESSIONAL ENGINEER ALAN R. BISI No. 62808 Exp. 06-30-16 CIVIL STATE OF CALIFORNIA

THE STATE OF CALIFORNIA OR ITS OFFICERS OR AGENTS SHALL NOT BE RESPONSIBLE FOR THE ACCURACY OR COMPLETENESS OF SCANNED COPIES OF THIS PLAN SHEET.

NOTE:

FOR ACCURATE RIGHT OF WAY DATA, CONTACT
RIGHT OF WAY ENGINEERING AT THE DISTRICT OFFICE.

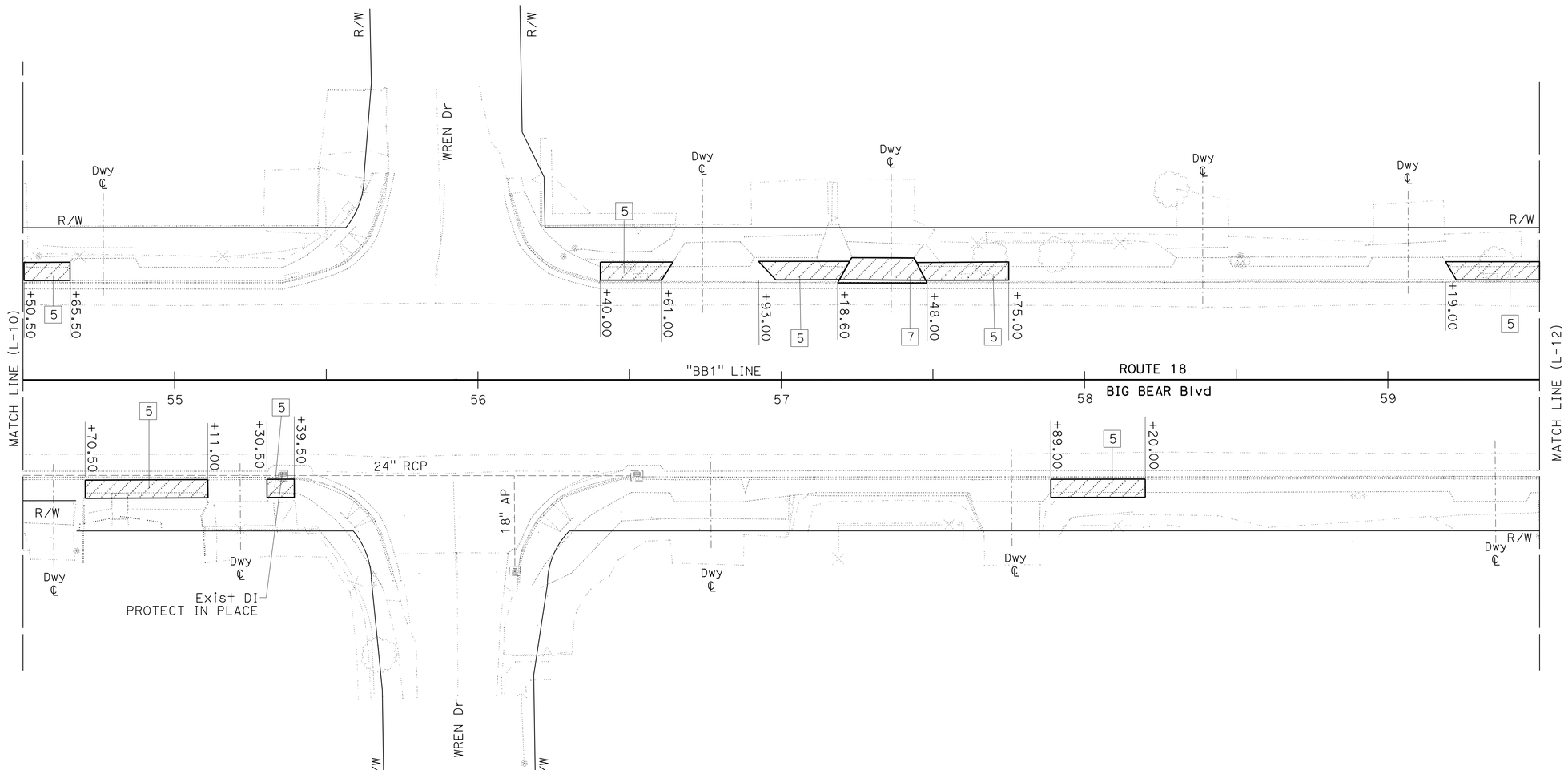

4 REPLACED PER ADDENDUM No. 4 DATED FEBRUARY 17, 2016

LAYOUT

SCALE 1"=20'

L-11

STATE OF CALIFORNIA - DEPARTMENT OF TRANSPORTATION
Caltrans® **DESIGN**

FUNCTIONAL SUPERVISOR: JUSTINE NIU
CALCULATED-DESIGNED BY: MOHAMMAD ABDRABOH
CHECKED BY: ALAN R. BISI
REVISED BY
DATE REVISED

LAST REVISION 06-26-15
DATE PLOTTED => 16-FEB-2016
TIME PLOTTED => 15:43

Dist	COUNTY	ROUTE	POST MILES TOTAL PROJECT	SHEET No.	TOTAL SHEETS
08	SBd	18	49.0/51.7	17	179

REGISTERED CIVIL ENGINEER 6-26-15 DATE

6-26-15
PLANS APPROVAL DATE

REGISTERED PROFESSIONAL ENGINEER ALAN R. BISI No. 62808 Exp. 06-30-16 CIVIL STATE OF CALIFORNIA

THE STATE OF CALIFORNIA OR ITS OFFICERS OR AGENTS SHALL NOT BE RESPONSIBLE FOR THE ACCURACY OR COMPLETENESS OF SCANNED COPIES OF THIS PLAN SHEET.

NOTE:

FOR ACCURATE RIGHT OF WAY DATA, CONTACT RIGHT OF WAY ENGINEERING AT THE DISTRICT OFFICE.

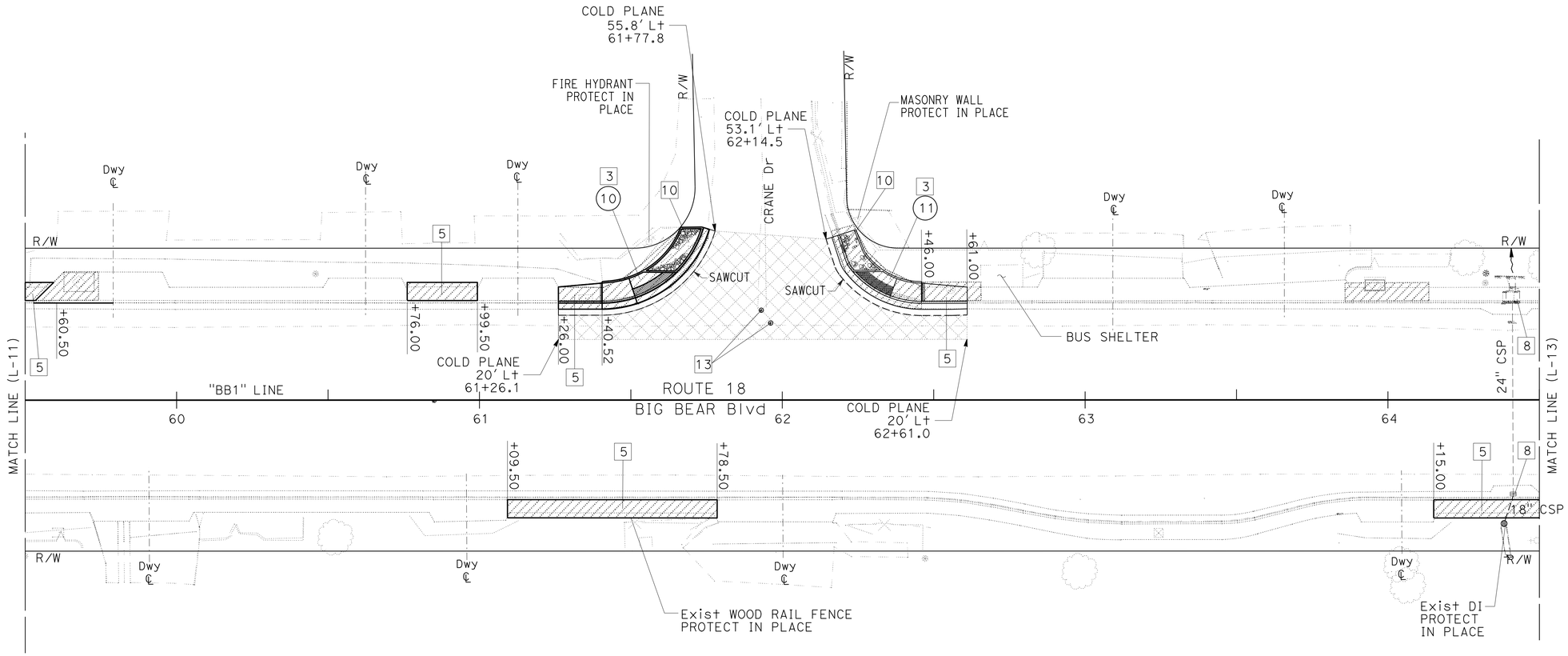

4 REPLACED PER ADDENDUM No. 4 DATED FEBRUARY 17, 2016

LAYOUT

SCALE 1"=20'

L-12

STATE OF CALIFORNIA - DEPARTMENT OF TRANSPORTATION

Caltrans

DESIGN

FUNCTIONAL SUPERVISOR: JUSTINE NIU

CALCULATED-DESIGNED BY: MOHAMMAD ABDRABOH

CHECKED BY: ALAN R. BISI

REVISED BY

DATE REVISED

LAST REVISION 06-26-15

DATE PLOTTED => 16-FEB-2016

TIME PLOTTED => 15:43

Dist	COUNTY	ROUTE	POST MILES TOTAL PROJECT	SHEET No.	TOTAL SHEETS
08	SBd	18	49.0/51.7	18	179

REGISTERED CIVIL ENGINEER 6-26-15 DATE

6-26-15
PLANS APPROVAL DATE

REGISTERED PROFESSIONAL ENGINEER ALAN R. BISI No. 62808 Exp. 06-30-16 CIVIL STATE OF CALIFORNIA

THE STATE OF CALIFORNIA OR ITS OFFICERS OR AGENTS SHALL NOT BE RESPONSIBLE FOR THE ACCURACY OR COMPLETENESS OF SCANNED COPIES OF THIS PLAN SHEET.

NOTE:

FOR ACCURATE RIGHT OF WAY DATA, CONTACT RIGHT OF WAY ENGINEERING AT THE DISTRICT OFFICE.

4

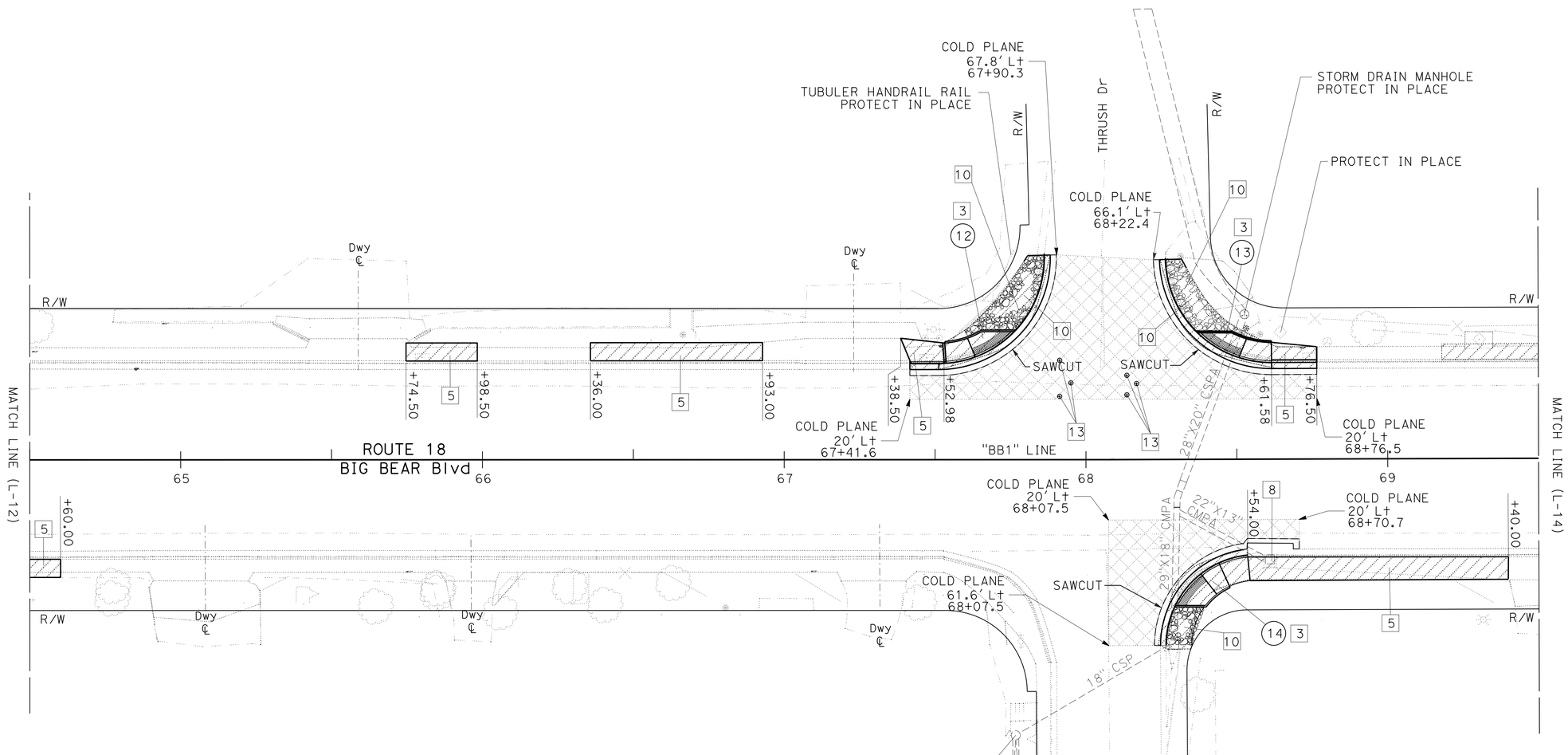

4 **REPLACED PER ADDENDUM No. 4 DATED FEBRUARY 17, 2016**

LAYOUT

SCALE 1"=20'

L-13

STATE OF CALIFORNIA - DEPARTMENT OF TRANSPORTATION

Caltrans

DESIGN

FUNCTIONAL SUPERVISOR: JUSTINE NIU

CALCULATED-DESIGNED BY: MOHAMMAD ABDRABOH

CHECKED BY: ALAN R. BISI

REVISED BY

DATE REVISED

LAST REVISION 06-26-15

DATE PLOTTED => 16-FEB-2016

TIME PLOTTED => 15:43

Dist	COUNTY	ROUTE	POST MILES TOTAL PROJECT	SHEET No.	TOTAL SHEETS
08	SBd	18	49.0/51.7	19	179

REGISTERED CIVIL ENGINEER 6-26-15 DATE

6-26-15
PLANS APPROVAL DATE

REGISTERED PROFESSIONAL ENGINEER ALAN R. BISI No. 62808 Exp. 06-30-16 CIVIL STATE OF CALIFORNIA

THE STATE OF CALIFORNIA OR ITS OFFICERS OR AGENTS SHALL NOT BE RESPONSIBLE FOR THE ACCURACY OR COMPLETENESS OF SCANNED COPIES OF THIS PLAN SHEET.

4

NOTE:

FOR ACCURATE RIGHT OF WAY DATA, CONTACT RIGHT OF WAY ENGINEERING AT THE DISTRICT OFFICE.

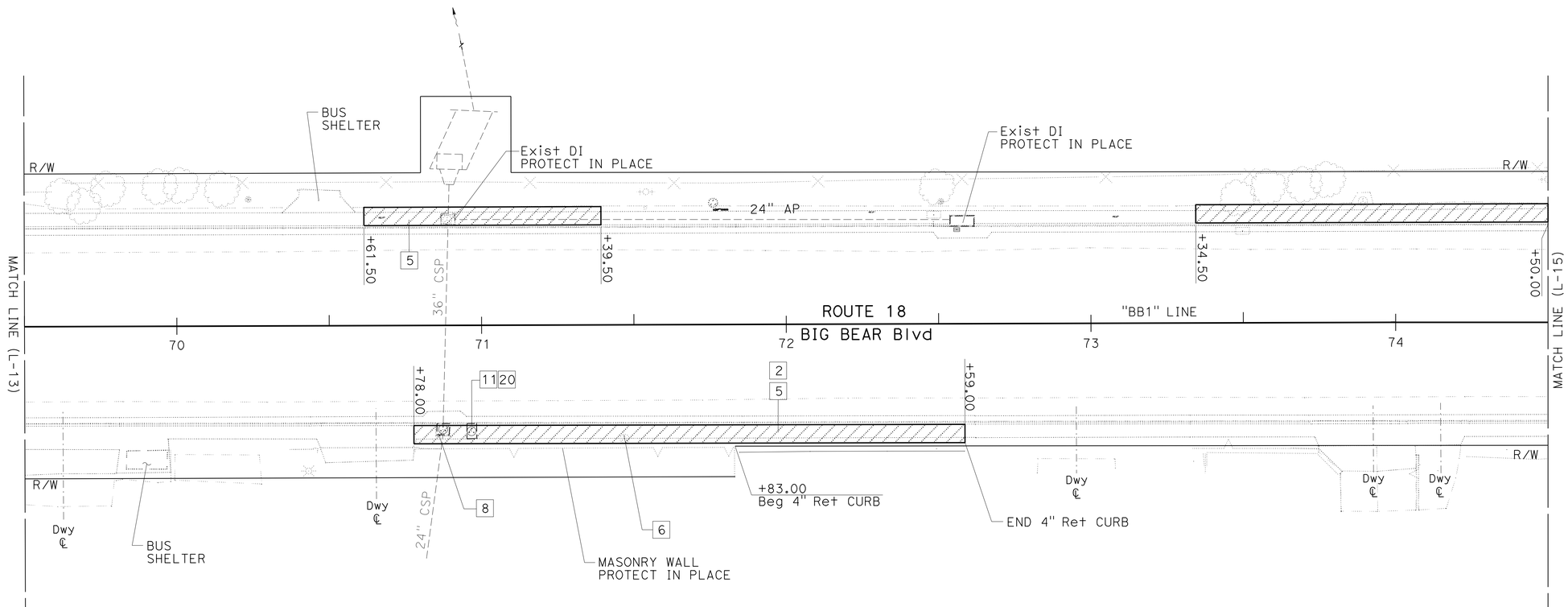

4 **REPLACED PER ADDENDUM No. 4 DATED FEBRUARY 17, 2016**

LAYOUT

SCALE 1"=20'

L-14

STATE OF CALIFORNIA - DEPARTMENT OF TRANSPORTATION

Caltrans

DESIGN

FUNCTIONAL SUPERVISOR: JUSTINE NIU

CALCULATED-DESIGNED BY: MOHAMMAD ABDRABOH

CHECKED BY: ALAN R. BISI

REVISED BY

DATE REVISED

LAST REVISION: 06-26-15

DATE PLOTTED => 16-FEB-2016

TIME PLOTTED => 15:43

Dist	COUNTY	ROUTE	POST MILES TOTAL PROJECT	SHEET No.	TOTAL SHEETS
08	SBd	18	49.0/51.7	20	179

REGISTERED CIVIL ENGINEER 6-26-15 DATE

6-26-15
PLANS APPROVAL DATE

REGISTERED PROFESSIONAL ENGINEER ALAN R. BISI No. 62808 Exp. 06-30-16 CIVIL STATE OF CALIFORNIA

THE STATE OF CALIFORNIA OR ITS OFFICERS OR AGENTS SHALL NOT BE RESPONSIBLE FOR THE ACCURACY OR COMPLETENESS OF SCANNED COPIES OF THIS PLAN SHEET.

NOTE:

FOR ACCURATE RIGHT OF WAY DATA, CONTACT RIGHT OF WAY ENGINEERING AT THE DISTRICT OFFICE.

4

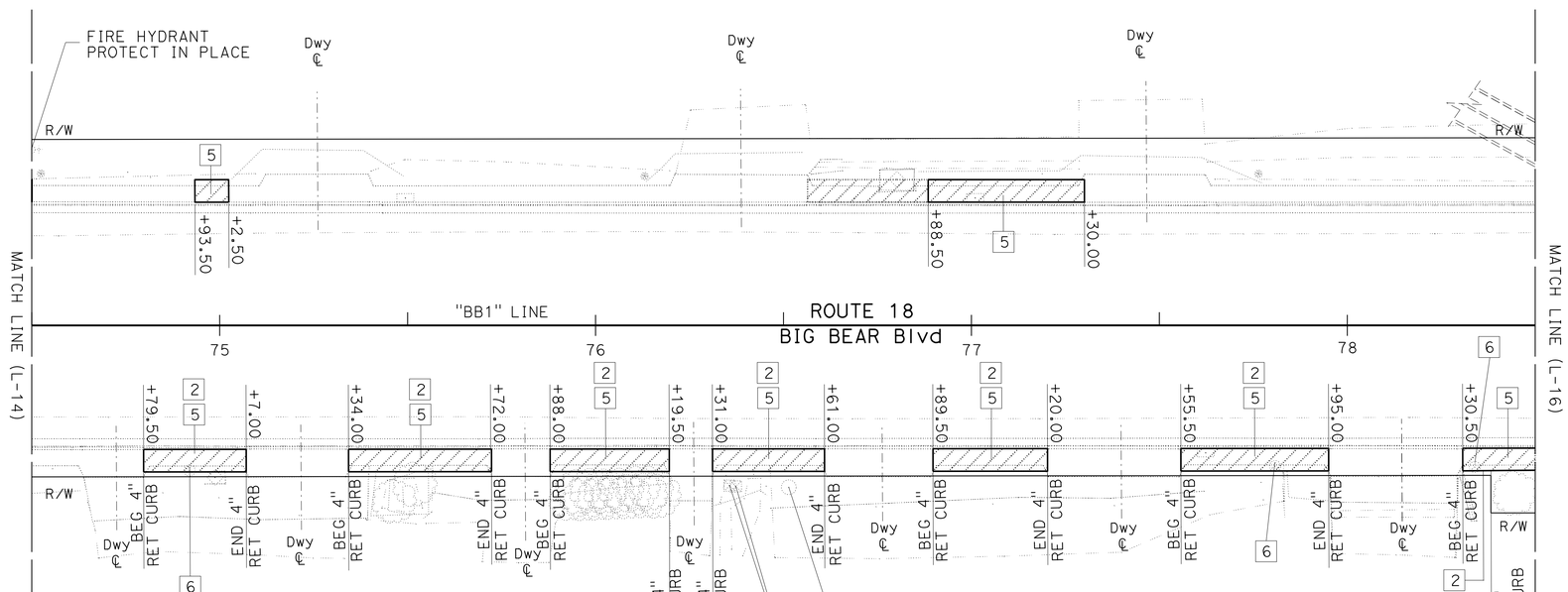

4 **REPLACED PER ADDENDUM No. 4 DATED FEBRUARY 17, 2016**

LAYOUT

SCALE 1"=20'

L-15

STATE OF CALIFORNIA - DEPARTMENT OF TRANSPORTATION

Caltrans

DESIGN

FUNCTIONAL SUPERVISOR: JUSTINE NIU

CALCULATED-DESIGNED BY: MOHAMMAD ABDRABOH

CHECKED BY: ALAN R. BISI

REVISED BY

DATE REVISED

LAST REVISION 06-26-15

DATE PLOTTED => 16-FEB-2016

TIME PLOTTED => 15:43

Dist	COUNTY	ROUTE	POST MILES TOTAL PROJECT	SHEET No.	TOTAL SHEETS
08	SBd	18	49.0/51.7	21	171

REGISTERED CIVIL ENGINEER 6-26-15 DATE

6-26-15
PLANS APPROVAL DATE

REGISTERED PROFESSIONAL ENGINEER ALAN R. BISI No. 62808 Exp. 06-30-16 CIVIL STATE OF CALIFORNIA

THE STATE OF CALIFORNIA OR ITS OFFICERS OR AGENTS SHALL NOT BE RESPONSIBLE FOR THE ACCURACY OR COMPLETENESS OF SCANNED COPIES OF THIS PLAN SHEET.

4

NOTE:

FOR ACCURATE RIGHT OF WAY DATA, CONTACT RIGHT OF WAY ENGINEERING AT THE DISTRICT OFFICE.

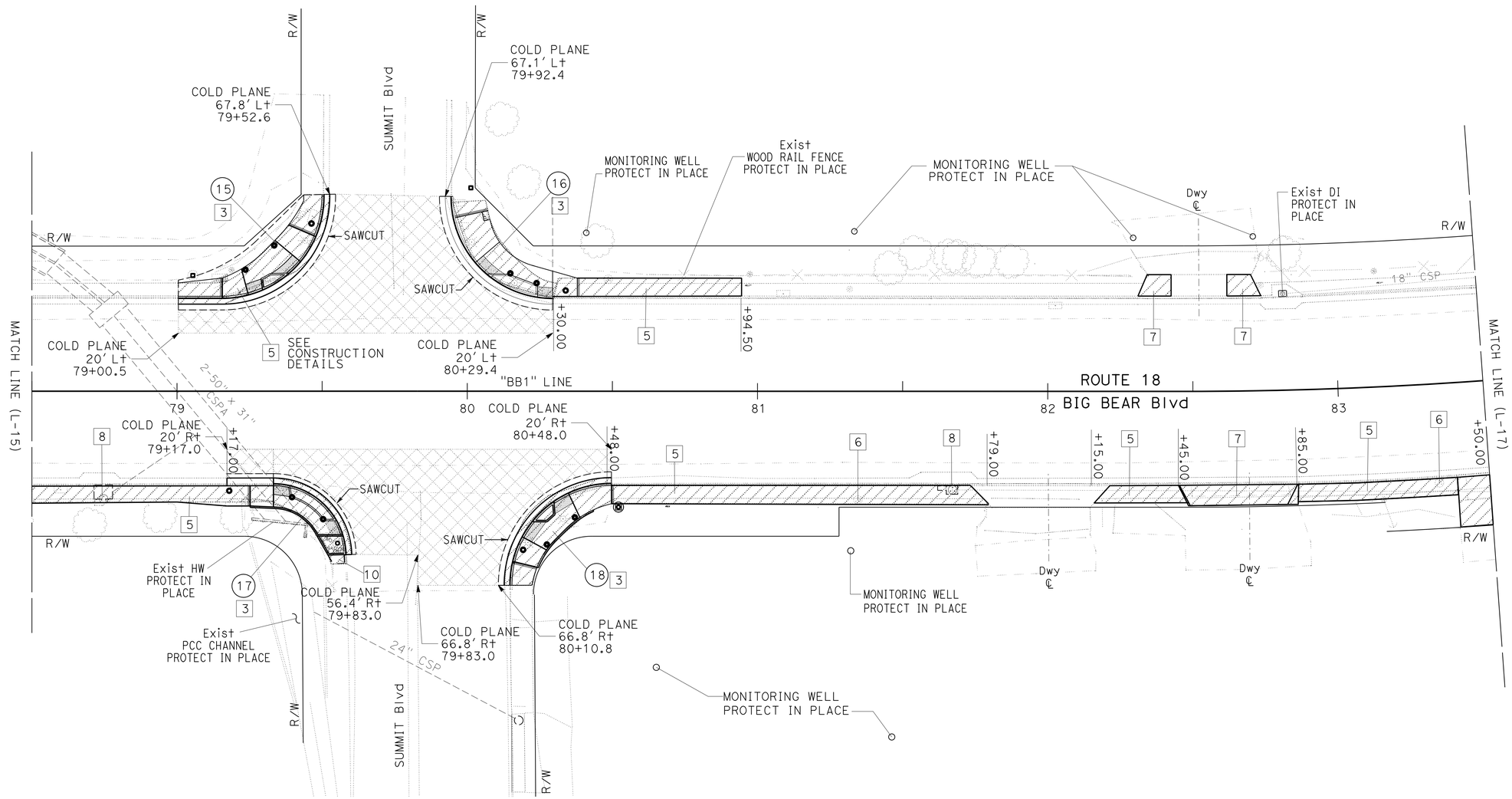

4 **REPLACED PER ADDENDUM No. 4 DATED FEBRUARY 17, 2016**

LAYOUT

SCALE 1"=20'

L-16

REVISED BY	DATE REVISED

CALCULATED-DESIGNED BY	CHECKED BY
MOHAMMAD ABDRABOH	ALAN R. BISI

FUNCTIONAL SUPERVISOR: JUSTINE NIU

STATE OF CALIFORNIA - DEPARTMENT OF TRANSPORTATION

Caltrans

DESIGN

LAST REVISION 06-26-15 | DATE PLOTTED => 16-FEB-2016 | TIME PLOTTED => 15:43

Dist	COUNTY	ROUTE	POST MILES TOTAL PROJECT	SHEET No.	TOTAL SHEETS
08	SBd	18	49.0/51.7	22	179

REGISTERED CIVIL ENGINEER 6-26-15 DATE

6-26-15
PLANS APPROVAL DATE

REGISTERED PROFESSIONAL ENGINEER ALAN R. BISI No. 62808 Exp. 06-30-16 CIVIL STATE OF CALIFORNIA

THE STATE OF CALIFORNIA OR ITS OFFICERS OR AGENTS SHALL NOT BE RESPONSIBLE FOR THE ACCURACY OR COMPLETENESS OF SCANNED COPIES OF THIS PLAN SHEET.

4

NOTE:

FOR ACCURATE RIGHT OF WAY DATA, CONTACT RIGHT OF WAY ENGINEERING AT THE DISTRICT OFFICE.

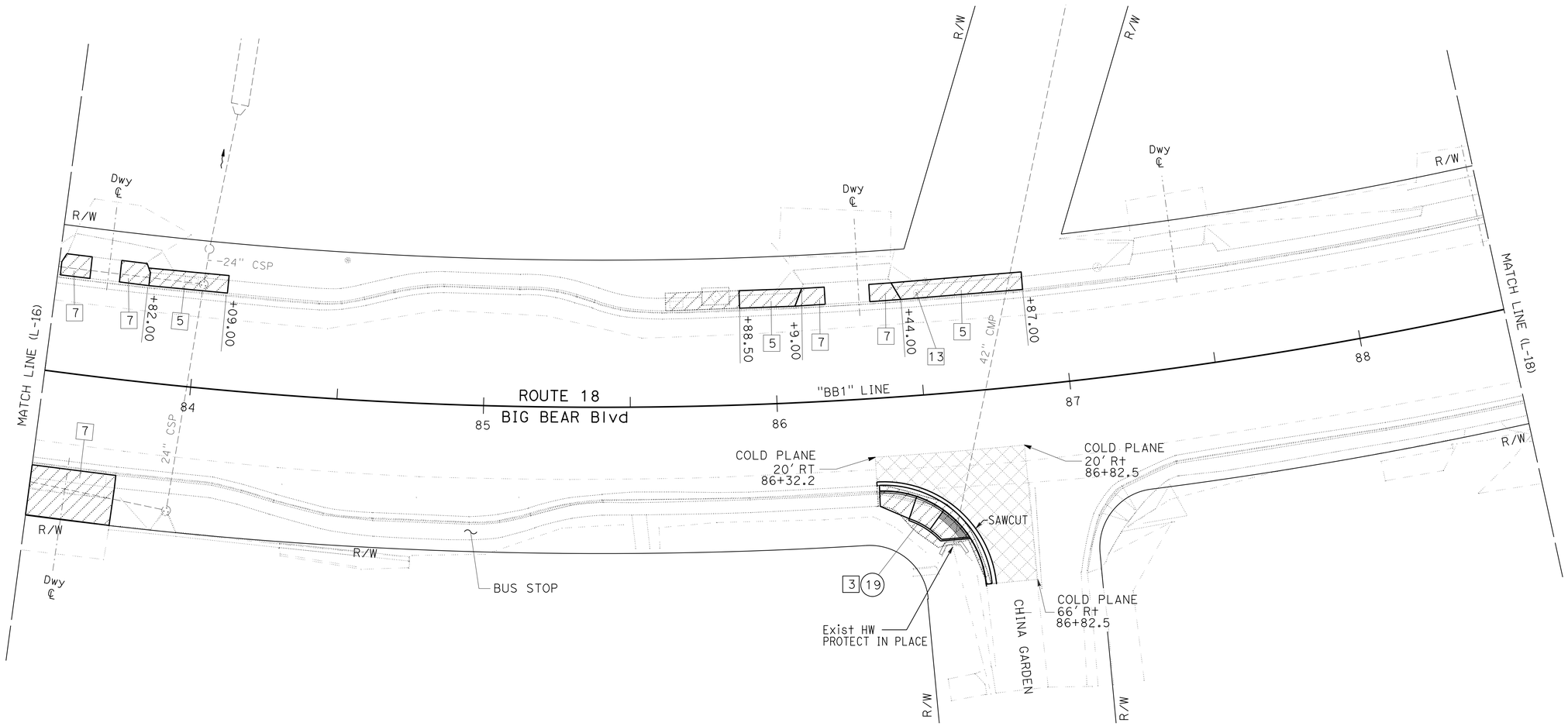

4 **REPLACED PER ADDENDUM No. 4 DATED FEBRUARY 17, 2016**

LAYOUT

SCALE 1"=20'

L-17

STATE OF CALIFORNIA - DEPARTMENT OF TRANSPORTATION

Caltrans

DESIGN

FUNCTIONAL SUPERVISOR: JUSTINE NIU

CALCULATED-DESIGNED BY: MOHAMMAD ABDRABOH

CHECKED BY: ALAN R. BISI

REVISED BY

DATE REVISED

LAST REVISION 06-26-15

DATE PLOTTED => 16-FEB-2016

TIME PLOTTED => 15:43

Dist	COUNTY	ROUTE	POST MILES TOTAL PROJECT	SHEET No.	TOTAL SHEETS
08	SBd	18	49.0/51.7	23	179

REGISTERED CIVIL ENGINEER 6-26-15 DATE

6-26-15
PLANS APPROVAL DATE

REGISTERED PROFESSIONAL ENGINEER ALAN R. BISI No. 62808 Exp. 06-30-16 CIVIL STATE OF CALIFORNIA

THE STATE OF CALIFORNIA OR ITS OFFICERS OR AGENTS SHALL NOT BE RESPONSIBLE FOR THE ACCURACY OR COMPLETENESS OF SCANNED COPIES OF THIS PLAN SHEET.

NOTE:

FOR ACCURATE RIGHT OF WAY DATA, CONTACT RIGHT OF WAY ENGINEERING AT THE DISTRICT OFFICE.

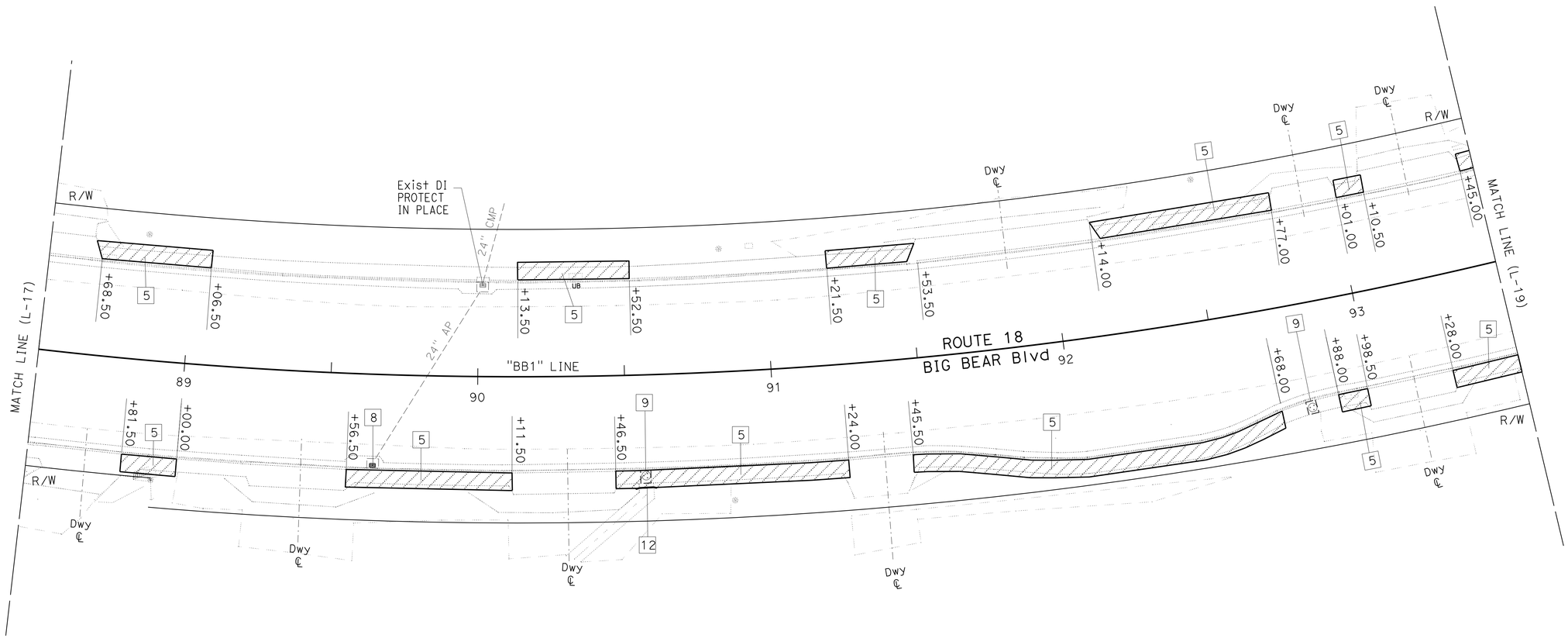

4 **REPLACED PER ADDENDUM No. 4 DATED FEBRUARY 17, 2016**

LAYOUT

SCALE 1"=20'

L-18

STATE OF CALIFORNIA - DEPARTMENT OF TRANSPORTATION
Caltrans
DESIGN

FUNCTIONAL SUPERVISOR: JUSTINE NIU

CALCULATED-DESIGNED BY: MOHAMMAD ABDRABOH
CHECKED BY: ALAN R. BISI

REVISED BY
DATE REVISED

LAST REVISION 06-26-15
DATE PLOTTED => 16-FEB-2016
TIME PLOTTED => 15:43

Dist	COUNTY	ROUTE	POST MILES TOTAL PROJECT	SHEET No.	TOTAL SHEETS
08	SBd	18	49.0/51.7	24	179

REGISTERED CIVIL ENGINEER 6-26-15 DATE

6-26-15
PLANS APPROVAL DATE

REGISTERED PROFESSIONAL ENGINEER ALAN R. BISI No. 62808 Exp. 06-30-16 CIVIL STATE OF CALIFORNIA

THE STATE OF CALIFORNIA OR ITS OFFICERS OR AGENTS SHALL NOT BE RESPONSIBLE FOR THE ACCURACY OR COMPLETENESS OF SCANNED COPIES OF THIS PLAN SHEET.

4

NOTE:

FOR ACCURATE RIGHT OF WAY DATA, CONTACT RIGHT OF WAY ENGINEERING AT THE DISTRICT OFFICE.

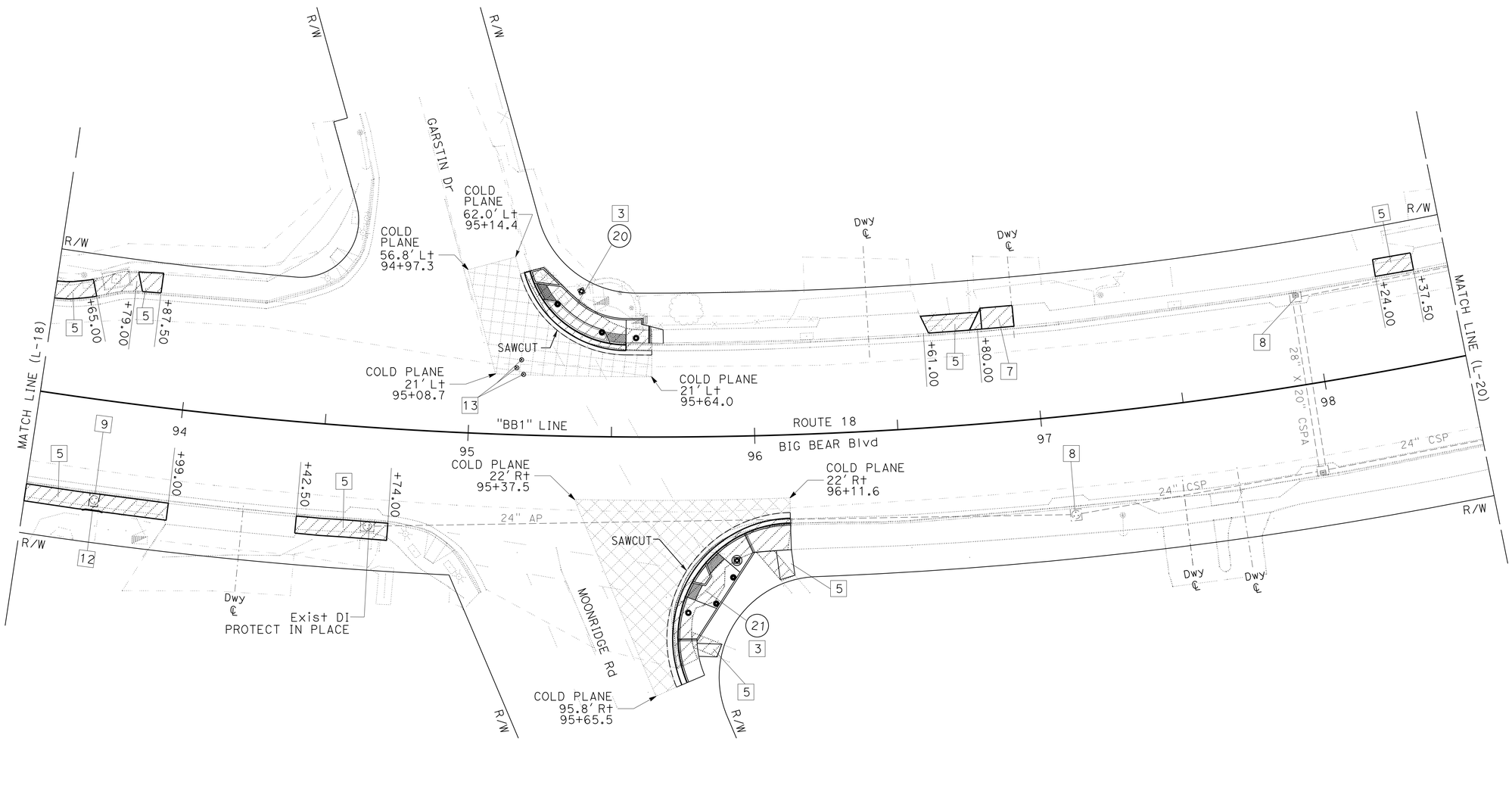

4 **REPLACED PER ADDENDUM No. 4 DATED FEBRUARY 17, 2016**

LAYOUT

SCALE 1"=20'

L-19

STATE OF CALIFORNIA - DEPARTMENT OF TRANSPORTATION

Caltrans

DESIGN

FUNCTIONAL SUPERVISOR: JUSTINE NIU

CALCULATED-DESIGNED BY: MOHAMMAD ABDRABOH

CHECKED BY: ALAN R. BISI

REVISED BY

DATE REVISED

LAST REVISION 06-26-15

DATE PLOTTED => 16-FEB-2016

TIME PLOTTED => 15:43

Dist	COUNTY	ROUTE	POST MILES TOTAL PROJECT	SHEET No.	TOTAL SHEETS
08	SBd	18	49.0/51.7	25	179

REGISTERED CIVIL ENGINEER 6-26-15 DATE

6-26-15
PLANS APPROVAL DATE

REGISTERED PROFESSIONAL ENGINEER ALAN R. BISI No. 62808 Exp. 06-30-16 CIVIL STATE OF CALIFORNIA

THE STATE OF CALIFORNIA OR ITS OFFICERS OR AGENTS SHALL NOT BE RESPONSIBLE FOR THE ACCURACY OR COMPLETENESS OF SCANNED COPIES OF THIS PLAN SHEET.

NOTE:

FOR ACCURATE RIGHT OF WAY DATA, CONTACT RIGHT OF WAY ENGINEERING AT THE DISTRICT OFFICE.

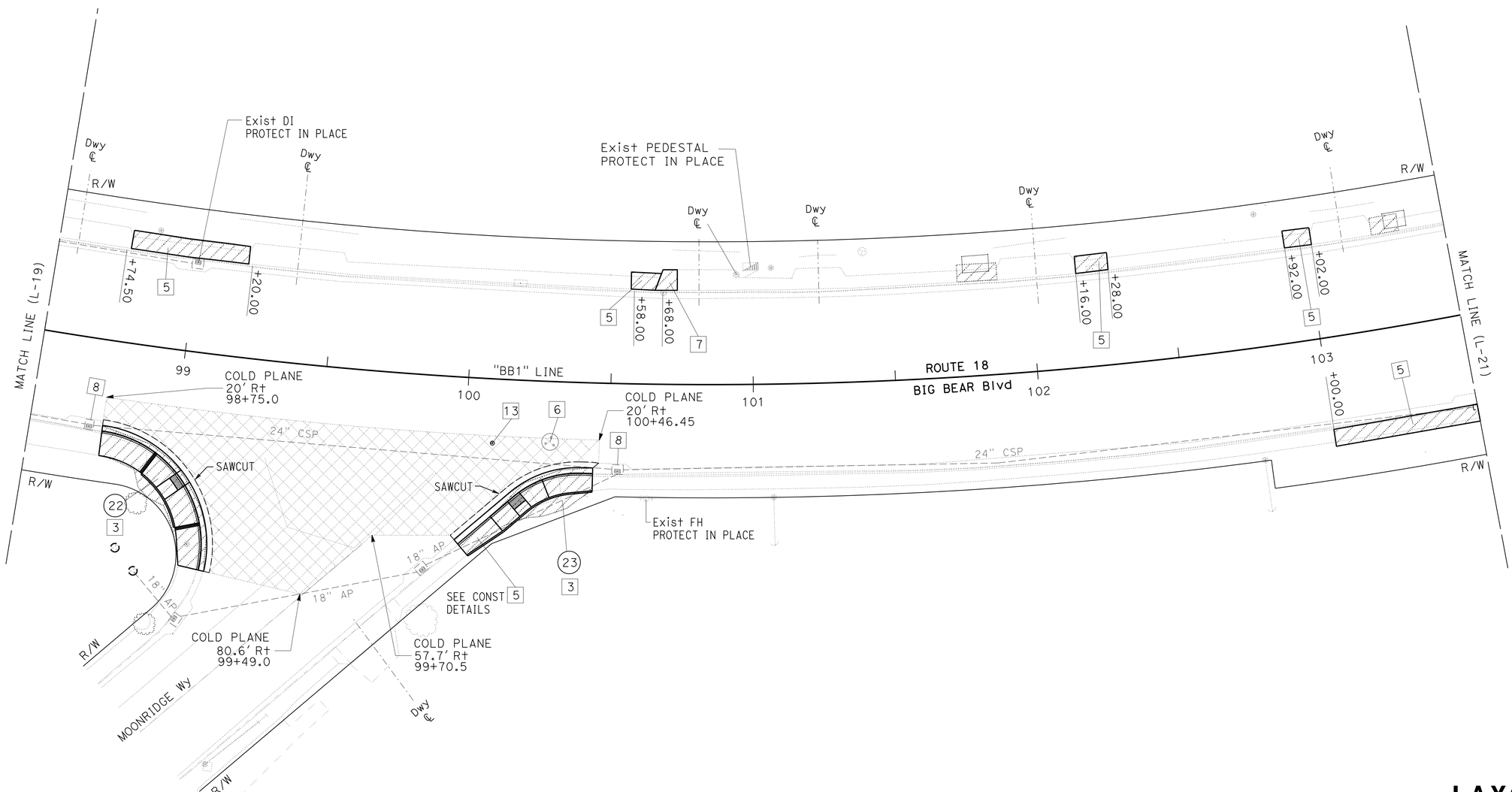

4 **REPLACED PER ADDENDUM No. 4 DATED FEBRUARY 17, 2016**

LAYOUT

SCALE 1"=20'

L-20

STATE OF CALIFORNIA - DEPARTMENT OF TRANSPORTATION

Caltrans

DESIGN

FUNCTIONAL SUPERVISOR: JUSTINE NIU

CALCULATED-DESIGNED BY: MOHAMMAD ABDRABOH

CHECKED BY: ALAN R. BISI

REVISED BY

DATE REVISED

LAST REVISION 06-26-15

DATE PLOTTED => 16-FEB-2016

TIME PLOTTED => 15:43

Dist	COUNTY	ROUTE	POST MILES TOTAL PROJECT	SHEET No.	TOTAL SHEETS
08	SBd	18	49.0/51.7	26	179

REGISTERED CIVIL ENGINEER 6-26-15 DATE

6-26-15
PLANS APPROVAL DATE

REGISTERED PROFESSIONAL ENGINEER ALAN R. BISI No. 62808 Exp. 06-30-16 CIVIL STATE OF CALIFORNIA

THE STATE OF CALIFORNIA OR ITS OFFICERS OR AGENTS SHALL NOT BE RESPONSIBLE FOR THE ACCURACY OR COMPLETENESS OF SCANNED COPIES OF THIS PLAN SHEET.

4

NOTE:

FOR ACCURATE RIGHT OF WAY DATA, CONTACT
RIGHT OF WAY ENGINEERING AT THE DISTRICT OFFICE.

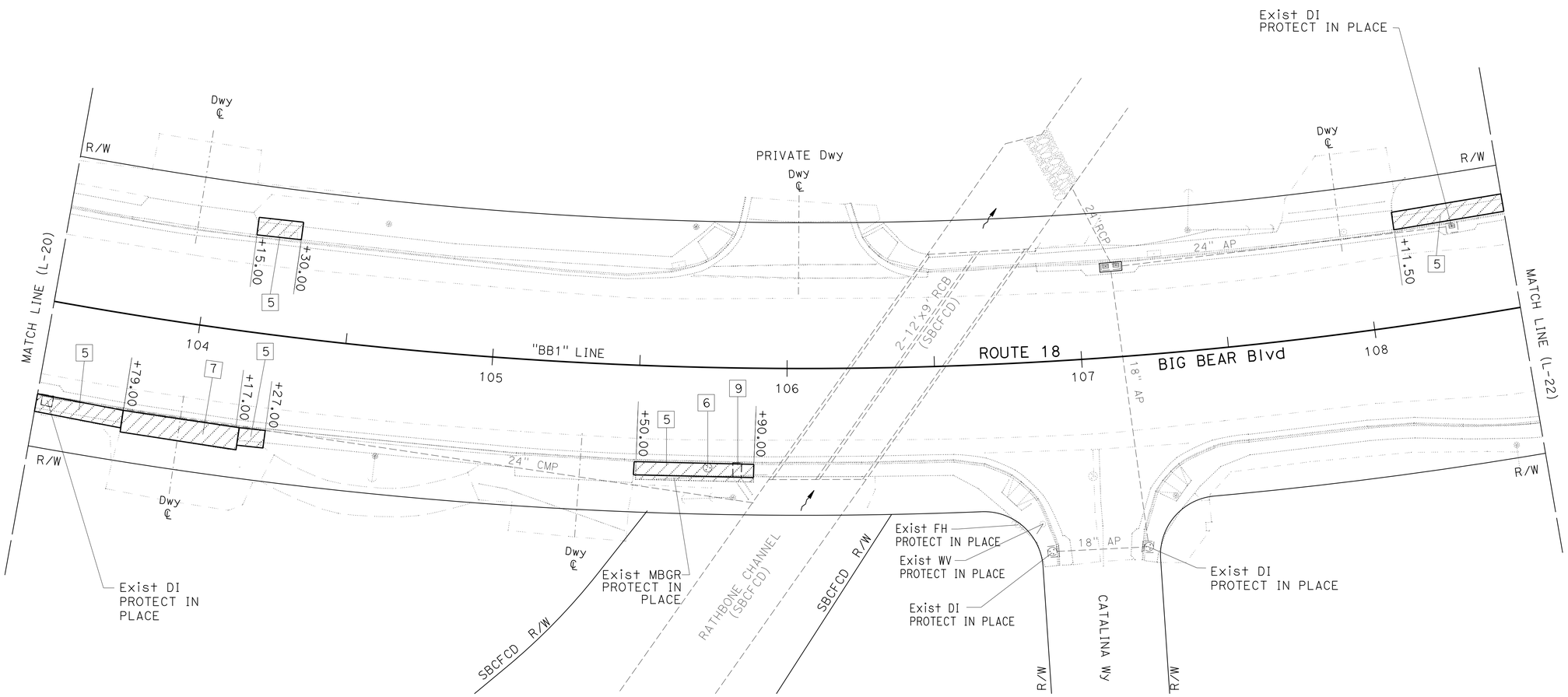

4 **REPLACED PER ADDENDUM No. 4 DATED FEBRUARY 17, 2016**

LAYOUT
SCALE 1"=20'

L-21

STATE OF CALIFORNIA - DEPARTMENT OF TRANSPORTATION
Caltrans® **DESIGN**

FUNCTIONAL SUPERVISOR: JUSTINE NIU
CALCULATED-DESIGNED BY: MOHAMMAD ABDRABOH
CHECKED BY: ALAN R. BISI
REVISED BY
DATE REVISED

LAST REVISION 06-26-15
DATE PLOTTED => 16-FEB-2016
TIME PLOTTED => 15:43

Dist	COUNTY	ROUTE	POST MILES TOTAL PROJECT	SHEET No.	TOTAL SHEETS
08	SBd	18	49.0/51.7	27	179

REGISTERED CIVIL ENGINEER 6-26-15 DATE

6-26-15
PLANS APPROVAL DATE

REGISTERED PROFESSIONAL ENGINEER ALAN R. BISI No. 62808 Exp. 06-30-16 CIVIL STATE OF CALIFORNIA

THE STATE OF CALIFORNIA OR ITS OFFICERS OR AGENTS SHALL NOT BE RESPONSIBLE FOR THE ACCURACY OR COMPLETENESS OF SCANNED COPIES OF THIS PLAN SHEET.

NOTE:

FOR ACCURATE RIGHT OF WAY DATA, CONTACT RIGHT OF WAY ENGINEERING AT THE DISTRICT OFFICE.

4

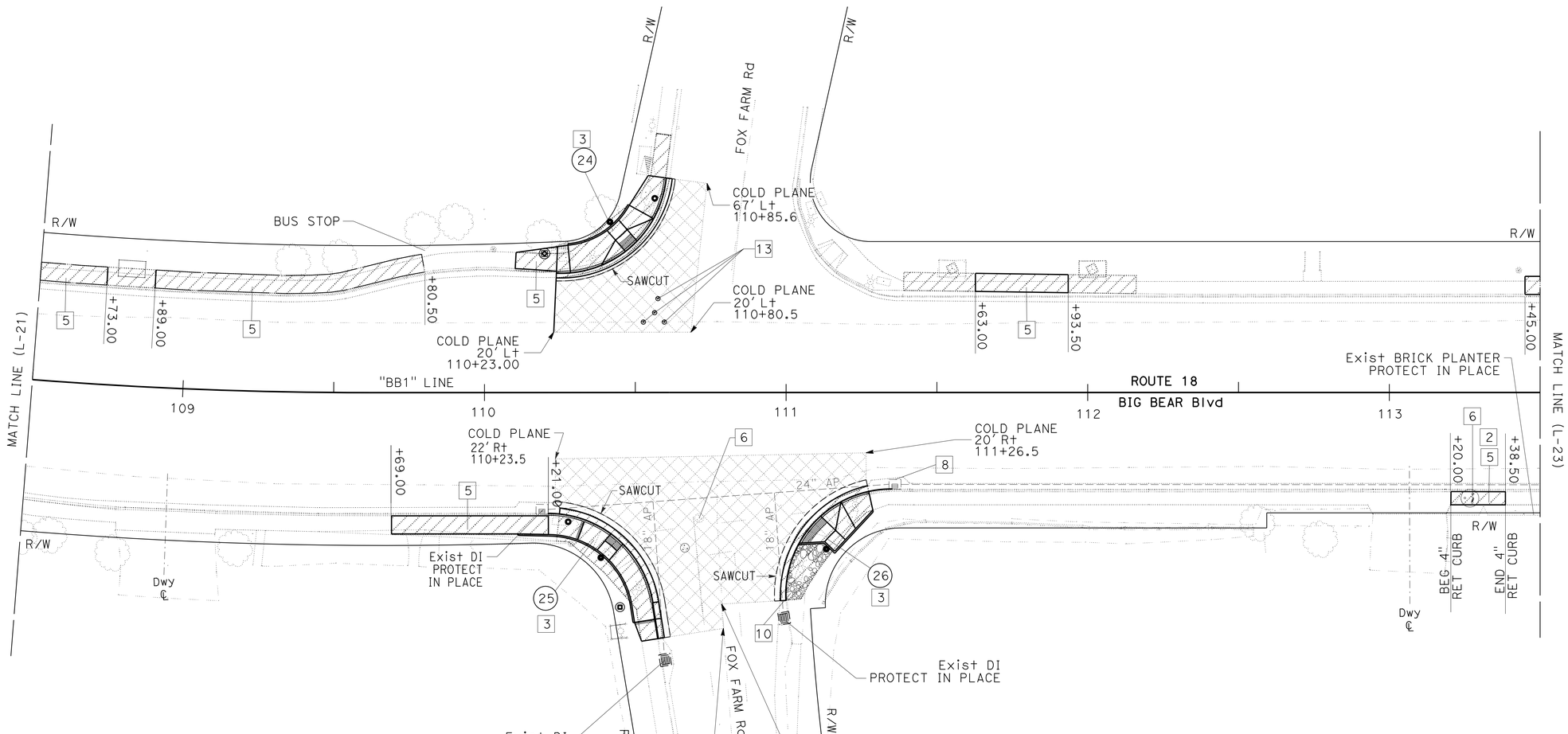

4 **REPLACED PER ADDENDUM No. 4 DATED FEBRUARY 17, 2016**

LAYOUT

SCALE 1"=20'

L-22

STATE OF CALIFORNIA - DEPARTMENT OF TRANSPORTATION

Caltrans® **DESIGN**

FUNCTIONAL SUPERVISOR: JUSTINE NIU

CALCULATED-DESIGNED BY: MOHAMMAD ABDRABOH

CHECKED BY: ALAN R. BISI

REVISED BY

DATE REVISED

LAST REVISION 06-26-15

DATE PLOTTED => 16-FEB-2016
TIME PLOTTED => 15:43

Dist	COUNTY	ROUTE	POST MILES TOTAL PROJECT	SHEET No.	TOTAL SHEETS
08	SBd	18	49.0/51.7	28	179

REGISTERED CIVIL ENGINEER 6-26-15 DATE

6-26-15
PLANS APPROVAL DATE

REGISTERED PROFESSIONAL ENGINEER ALAN R. BISI No. 62808 Exp. 06-30-16 CIVIL STATE OF CALIFORNIA

THE STATE OF CALIFORNIA OR ITS OFFICERS OR AGENTS SHALL NOT BE RESPONSIBLE FOR THE ACCURACY OR COMPLETENESS OF SCANNED COPIES OF THIS PLAN SHEET.

4

NOTE:

FOR ACCURATE RIGHT OF WAY DATA, CONTACT RIGHT OF WAY ENGINEERING AT THE DISTRICT OFFICE.

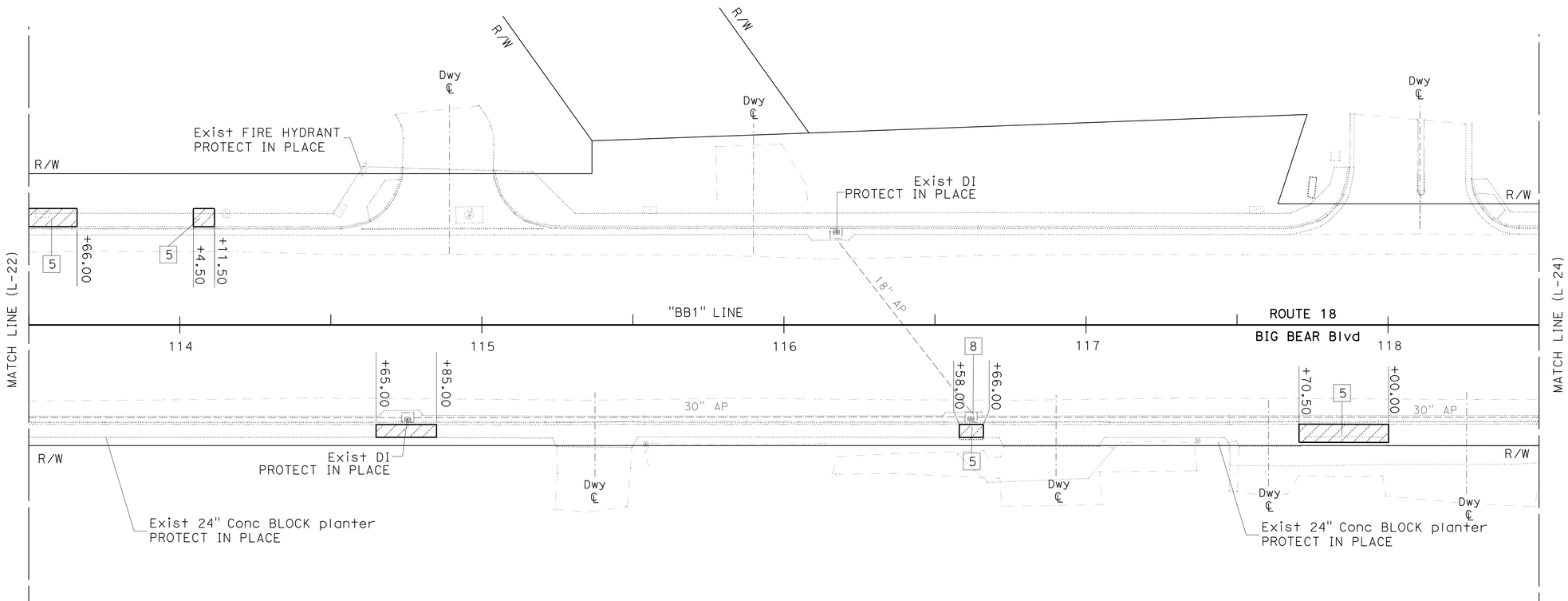

4 **REPLACED PER ADDENDUM No. 4 DATED FEBRUARY 17, 2016**

LAYOUT

SCALE 1"=20'

L-23

STATE OF CALIFORNIA - DEPARTMENT OF TRANSPORTATION

Caltrans

DESIGN

FUNCTIONAL SUPERVISOR: JUSTINE NIU

CALCULATED-DESIGNED BY: MOHAMMAD ABDRABOH

CHECKED BY: ALAN R. BISI

REVISED BY

DATE REVISED

LAST REVISION 06-26-15

DATE PLOTTED => 16-FEB-2016

TIME PLOTTED => 15:43

Dist	COUNTY	ROUTE	POST MILES TOTAL PROJECT	SHEET No.	TOTAL SHEETS
08	SBd	18	49.0/51.7	29	179

REGISTERED CIVIL ENGINEER 6-26-15 DATE

6-26-15
PLANS APPROVAL DATE

REGISTERED PROFESSIONAL ENGINEER ALAN R. BISI No. 62808 Exp. 06-30-16 CIVIL STATE OF CALIFORNIA

THE STATE OF CALIFORNIA OR ITS OFFICERS OR AGENTS SHALL NOT BE RESPONSIBLE FOR THE ACCURACY OR COMPLETENESS OF SCANNED COPIES OF THIS PLAN SHEET.

4

NOTE:

FOR ACCURATE RIGHT OF WAY DATA, CONTACT
RIGHT OF WAY ENGINEERING AT THE DISTRICT OFFICE.

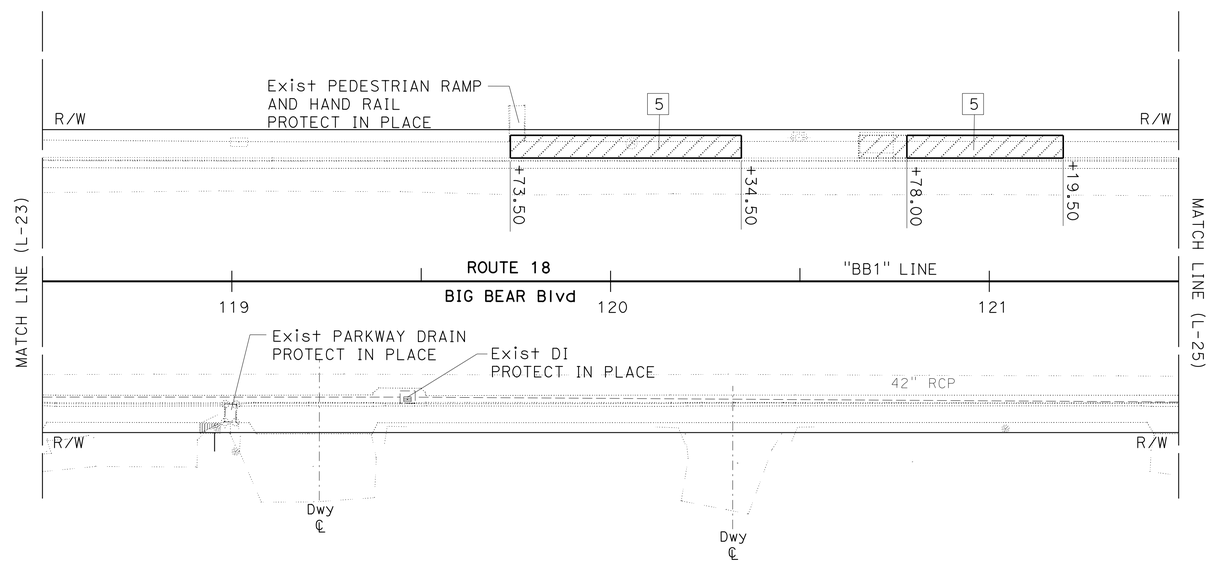

4 **REPLACED PER ADDENDUM No. 4 DATED FEBRUARY 17, 2016**

LAYOUT

SCALE 1"=20'

L-24

STATE OF CALIFORNIA - DEPARTMENT OF TRANSPORTATION

Caltrans

DESIGN

FUNCTIONAL SUPERVISOR: JUSTINE NIU

CALCULATED-DESIGNED BY: MOHAMMAD ABDRABOH

CHECKED BY: ALAN R. BISI

REVISED BY

DATE REVISED

LAST REVISION 06-26-15 | DATE PLOTTED => 16-FEB-2016 | TIME PLOTTED => 15:43

Dist	COUNTY	ROUTE	POST MILES TOTAL PROJECT	SHEET No.	TOTAL SHEETS
08	SBd	18	49.0/51.7	30	179

REGISTERED CIVIL ENGINEER 6-26-15 DATE

6-26-15
PLANS APPROVAL DATE

REGISTERED PROFESSIONAL ENGINEER ALAN R. BISI No. 62808 Exp. 06-30-16 CIVIL STATE OF CALIFORNIA

THE STATE OF CALIFORNIA OR ITS OFFICERS OR AGENTS SHALL NOT BE RESPONSIBLE FOR THE ACCURACY OR COMPLETENESS OF SCANNED COPIES OF THIS PLAN SHEET.

4

NOTE:

FOR ACCURATE RIGHT OF WAY DATA, CONTACT RIGHT OF WAY ENGINEERING AT THE DISTRICT OFFICE.

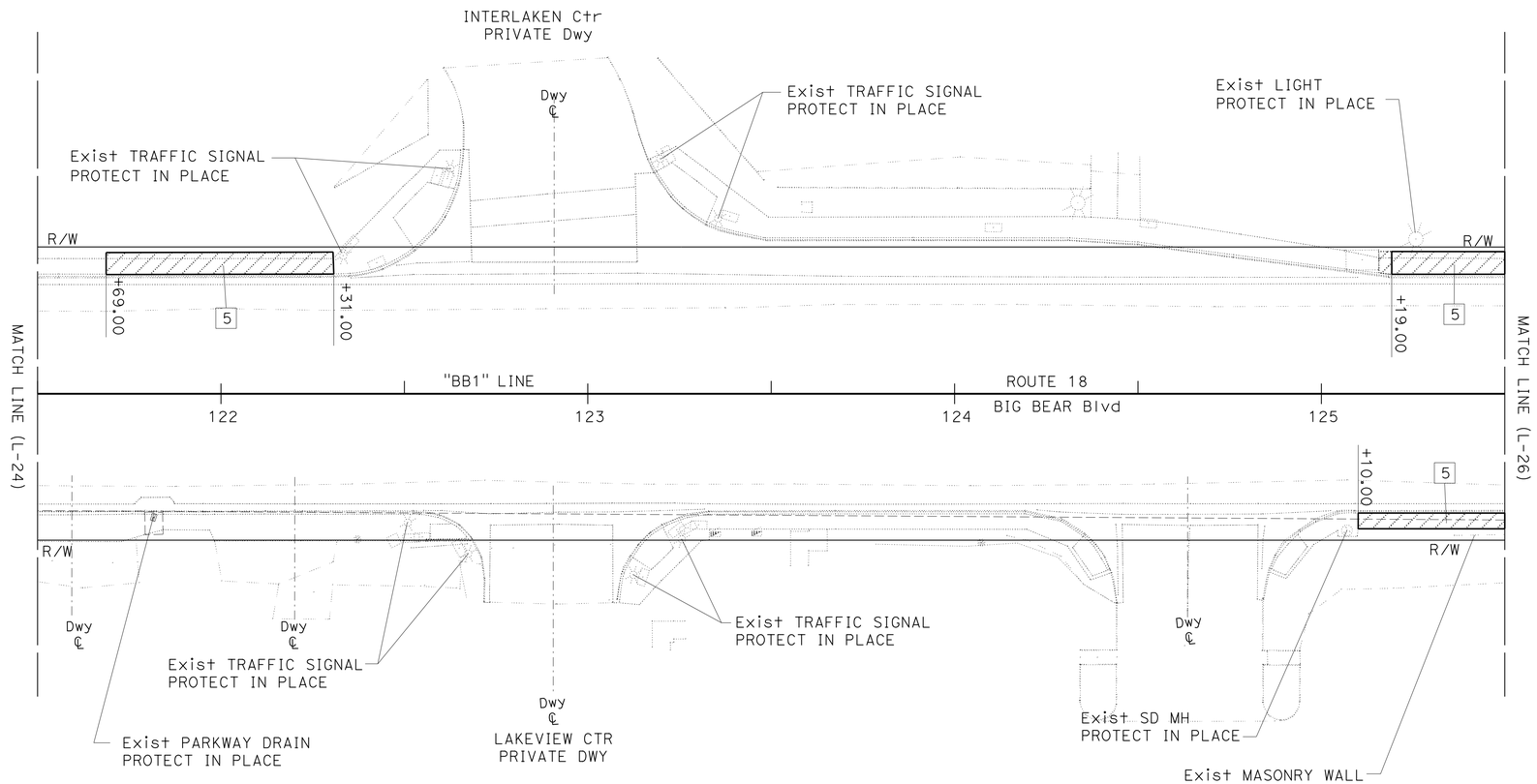

4 **REPLACED PER ADDENDUM No. 4 DATED FEBRUARY 17, 2016**

LAYOUT

SCALE 1"=20'

L-25

STATE OF CALIFORNIA - DEPARTMENT OF TRANSPORTATION

Caltrans® **DESIGN**

FUNCTIONAL SUPERVISOR: JUSTINE NIU

CALCULATED-DESIGNED BY: MOHAMMAD ABDRABOH

CHECKED BY: ALAN R. BISI

REVISED BY

DATE REVISED

LAST REVISION 06-26-15

DATE PLOTTED => 16-FEB-2016

TIME PLOTTED => 15:43

Dist	COUNTY	ROUTE	POST MILES TOTAL PROJECT	SHEET No.	TOTAL SHEETS
08	SBd	18	49.0/51.7	31	179

REGISTERED CIVIL ENGINEER 6-26-15 DATE

6-26-15
PLANS APPROVAL DATE

REGISTERED PROFESSIONAL ENGINEER ALAN R. BISI No. 62808 Exp. 06-30-16 CIVIL STATE OF CALIFORNIA

THE STATE OF CALIFORNIA OR ITS OFFICERS OR AGENTS SHALL NOT BE RESPONSIBLE FOR THE ACCURACY OR COMPLETENESS OF SCANNED COPIES OF THIS PLAN SHEET.

NOTE:

FOR ACCURATE RIGHT OF WAY DATA, CONTACT RIGHT OF WAY ENGINEERING AT THE DISTRICT OFFICE.

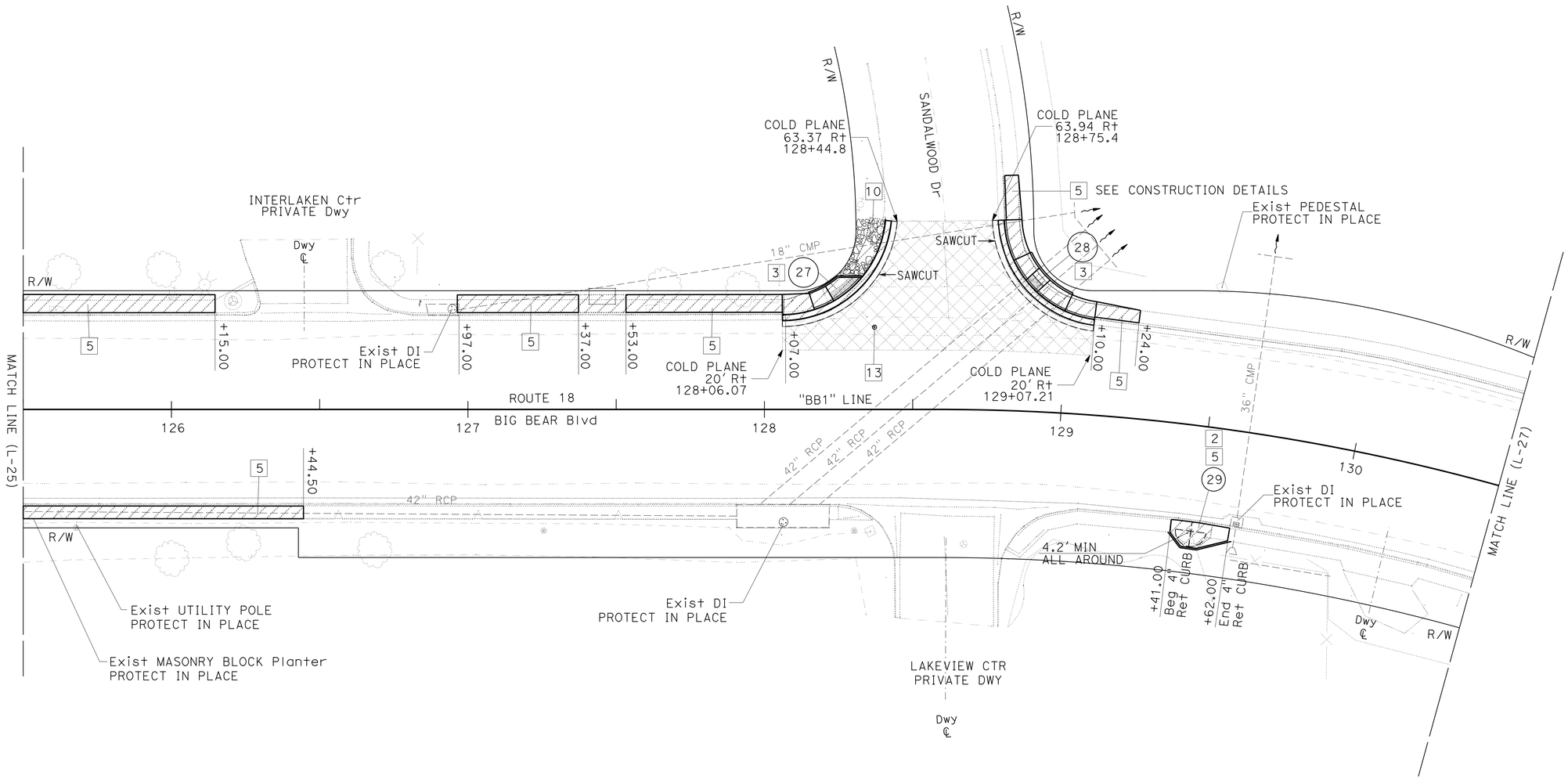

4 REPLACED PER ADDENDUM No. 4 DATED FEBRUARY 17, 2016

LAYOUT

SCALE 1"=20'

L-26

STATE OF CALIFORNIA - DEPARTMENT OF TRANSPORTATION

DESIGN

FUNCTIONAL SUPERVISOR: JUSTINE NIU

CALCULATED-DESIGNED BY: MOHAMMAD ABDRABOH

CHECKED BY: ALAN R. BISI

REVISED BY

DATE REVISED

LAST REVISION 06-26-15

DATE PLOTTED => 16-FEB-2016
TIME PLOTTED => 15:43

Dist	COUNTY	ROUTE	POST MILES TOTAL PROJECT	SHEET No.	TOTAL SHEETS
08	SBd	18	49.0/51.7	32	179

REGISTERED CIVIL ENGINEER 6-26-15 DATE

6-26-15
PLANS APPROVAL DATE

REGISTERED PROFESSIONAL ENGINEER ALAN R. BISI No. 62808 Exp. 06-30-16 CIVIL STATE OF CALIFORNIA

THE STATE OF CALIFORNIA OR ITS OFFICERS OR AGENTS SHALL NOT BE RESPONSIBLE FOR THE ACCURACY OR COMPLETENESS OF SCANNED COPIES OF THIS PLAN SHEET.

NOTE:

FOR ACCURATE RIGHT OF WAY DATA, CONTACT RIGHT OF WAY ENGINEERING AT THE DISTRICT OFFICE.

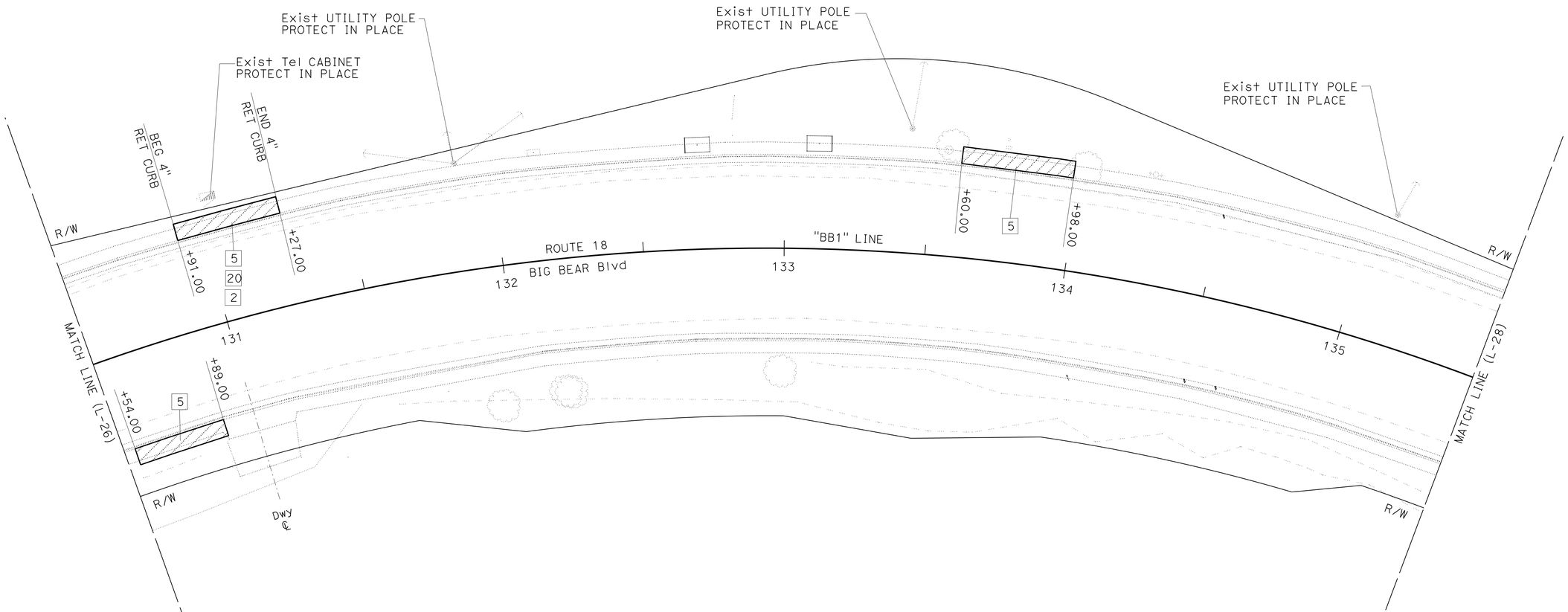

4 REPLACED PER ADDENDUM No. 4 DATED FEBRUARY 17, 2016

LAYOUT
SCALE 1"=20'
L-27

STATE OF CALIFORNIA - DEPARTMENT OF TRANSPORTATION
Caltrans
DESIGN

FUNCTIONAL SUPERVISOR: JUSTINE NIU
CALCULATED-DESIGNED BY: MOHAMMAD ABDRABOH
CHECKED BY: ALAN R. BISI
REVISED BY
DATE REVISED

LAST REVISION 06-26-15
DATE PLOTTED => 16-FEB-2016
TIME PLOTTED => 15:43

Dist	COUNTY	ROUTE	POST MILES TOTAL PROJECT	SHEET No.	TOTAL SHEETS
08	SBd	18	49.0/51.7	33	179

REGISTERED CIVIL ENGINEER 6-26-15 DATE

6-26-15
PLANS APPROVAL DATE

REGISTERED PROFESSIONAL ENGINEER ALAN R. BISI No. 62808 Exp. 06-30-16 CIVIL STATE OF CALIFORNIA

THE STATE OF CALIFORNIA OR ITS OFFICERS OR AGENTS SHALL NOT BE RESPONSIBLE FOR THE ACCURACY OR COMPLETENESS OF SCANNED COPIES OF THIS PLAN SHEET.

NOTE:

FOR ACCURATE RIGHT OF WAY DATA, CONTACT
RIGHT OF WAY ENGINEERING AT THE DISTRICT OFFICE.

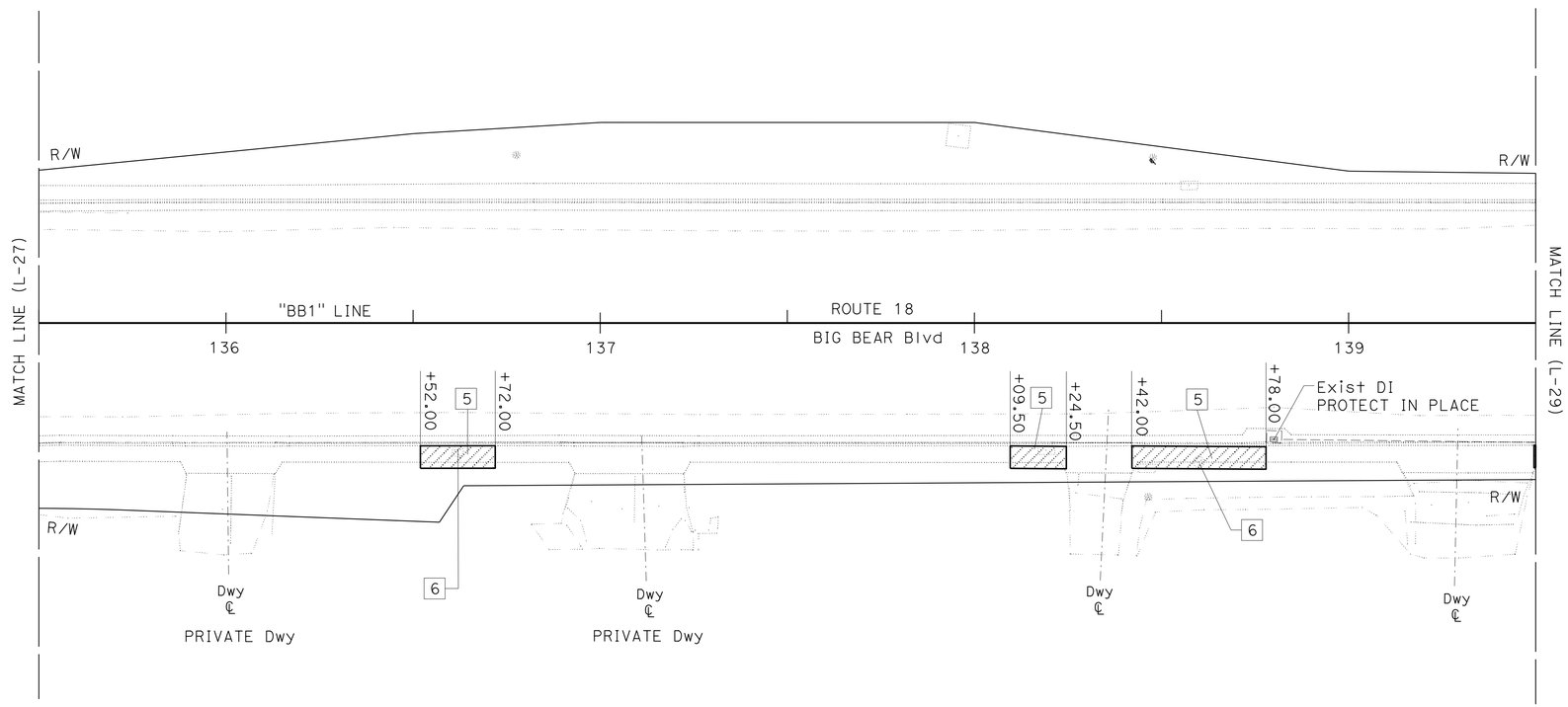

4 **REPLACED PER ADDENDUM No. 4 DATED FEBRUARY 17, 2016**

LAYOUT

SCALE 1"=20'

L-28

STATE OF CALIFORNIA - DEPARTMENT OF TRANSPORTATION
Caltrans
DESIGN

FUNCTIONAL SUPERVISOR: JUSTINE NIU
CALCULATED-DESIGNED BY: MOHAMMAD ABDRABOH
CHECKED BY: ALAN R. BISI
REVISED BY
DATE REVISED

LAST REVISION 06-26-15
DATE PLOTTED => 16-FEB-2016
TIME PLOTTED => 15:43

Dist	COUNTY	ROUTE	POST MILES TOTAL PROJECT	SHEET No.	TOTAL SHEETS
08	SBd	18	49.0/51.7	34	179

REGISTERED CIVIL ENGINEER 6-26-15 DATE

6-26-15
PLANS APPROVAL DATE

REGISTERED PROFESSIONAL ENGINEER ALAN R. BISI No. 62808 Exp. 06-30-16 CIVIL STATE OF CALIFORNIA

THE STATE OF CALIFORNIA OR ITS OFFICERS OR AGENTS SHALL NOT BE RESPONSIBLE FOR THE ACCURACY OR COMPLETENESS OF SCANNED COPIES OF THIS PLAN SHEET.

NOTE:

FOR ACCURATE RIGHT OF WAY DATA, CONTACT RIGHT OF WAY ENGINEERING AT THE DISTRICT OFFICE.

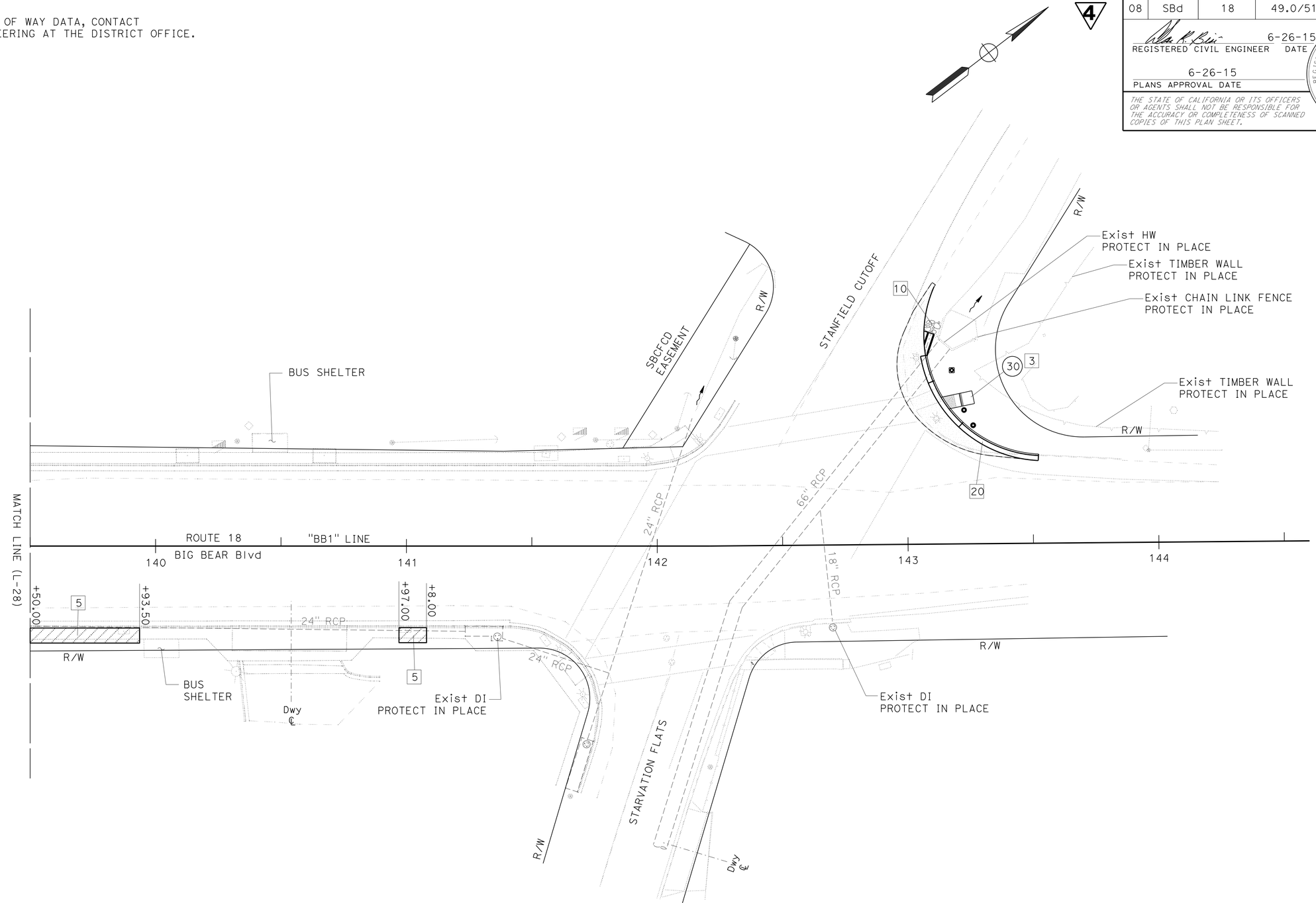

4 **REPLACED PER ADDENDUM No. 4 DATED FEBRUARY 17, 2016**

LAYOUT

SCALE 1"=20'

L-29

STATE OF CALIFORNIA - DEPARTMENT OF TRANSPORTATION

Caltrans **DESIGN**

FUNCTIONAL SUPERVISOR: JUSTINE NIU

CALCULATED-DESIGNED BY: MOHAMMAD ABDRABOH

CHECKED BY: ALAN R. BISI

REVISED BY

DATE REVISED

LAST REVISION 06-26-15

DATE PLOTTED => 16-FEB-2016

TIME PLOTTED => 15:44

Dist	COUNTY	ROUTE	POST MILES TOTAL PROJECT	SHEET No.	TOTAL SHEETS
08	SBd	18	49.0/51.7	35	171

REGISTERED CIVIL ENGINEER 6-26-15 DATE

6-26-15
PLANS APPROVAL DATE

REGISTERED PROFESSIONAL ENGINEER ALAN R. BISI No. 62808 Exp. 06-30-16 CIVIL STATE OF CALIFORNIA

THE STATE OF CALIFORNIA OR ITS OFFICERS OR AGENTS SHALL NOT BE RESPONSIBLE FOR THE ACCURACY OR COMPLETENESS OF SCANNED COPIES OF THIS PLAN SHEET.

NOTE:

1. CONTRACTOR SHALL REMOVE EXISTING PCC AT CONSTRUCTION JOINT OR SAW CUT AT LOCATION AS SPECIFIED BY ENGINEER.
2. SEE CALTRANS REVISED STANDARD PLAN 2010 A88A, A88B, AND A87A FOR DETAILS NOT SHOWN
3. SAWCUT LINE SHALL BE ONE-FOOT FROM EXISTING GUTTER LIP, UNLESS OTHERWISE DIRECTED BY ENGINEER.
4. GUTTER PAN TRANSITION TO OCCUR ALONG APRON FOR CASE A/B RAMPS. FOR OTHER RAMP CASES, THE TRANSITION LENGTH SHALL BE 5'.
5. CONTRACTOR SHALL OMIT CONCRETE FOUNDATION FOR PEDESTRIAN PUSH BUTTONS SHOWN AS MOUNTED ON TOP OF RETAINING CURBS OR CURBED ISLANDS. PEDESTRIAN PUSH BUTTON ANCHOR BOLTS SHALL BE SET WITHIN RETAINING CURB WITH SUFFICIENT THREADS EXPOSED TO SECURELY AFFIX BASE PLATE TO TOP OF CURB. CONTRACTOR SHALL FIELD-CUT PEDESTRIAN PUSH BUTTON POST SO HEIGHT OF PUSH BUTTON SHALL MEASURE 40" ABOVE PEDESTRIAN LANDING FINISH GRADE. SEE STANDARD PLAN ES-7A AND ELECTRICAL PLANS FOR FURTHER DETAILS. SEE NOTE 6, THIS SHEET.
6. FOR CURB-MOUNTED PEDESTRIAN PUSH BUTTONS, CURB WIDTH SHALL BE WIDENED TO PROVIDE 2" CLEARANCE AROUND PUSH BUTTON ANCHOR BOLTS. CURB SHALL BE WIDENED SO AS NOT TO ENCROACH THE PEDESTRAIN PASSAGE WAY OR REDUCE THE WIDTH OF THE PEDESTRIAN PASSAGE WAY IN ANY MANNER.

CURVE DATA

No. ⊕	R	Δ	T	L
1	30'	89°18'00"	29.64'	46.76'
2	23'	89°18'00"	22.72'	35.85'

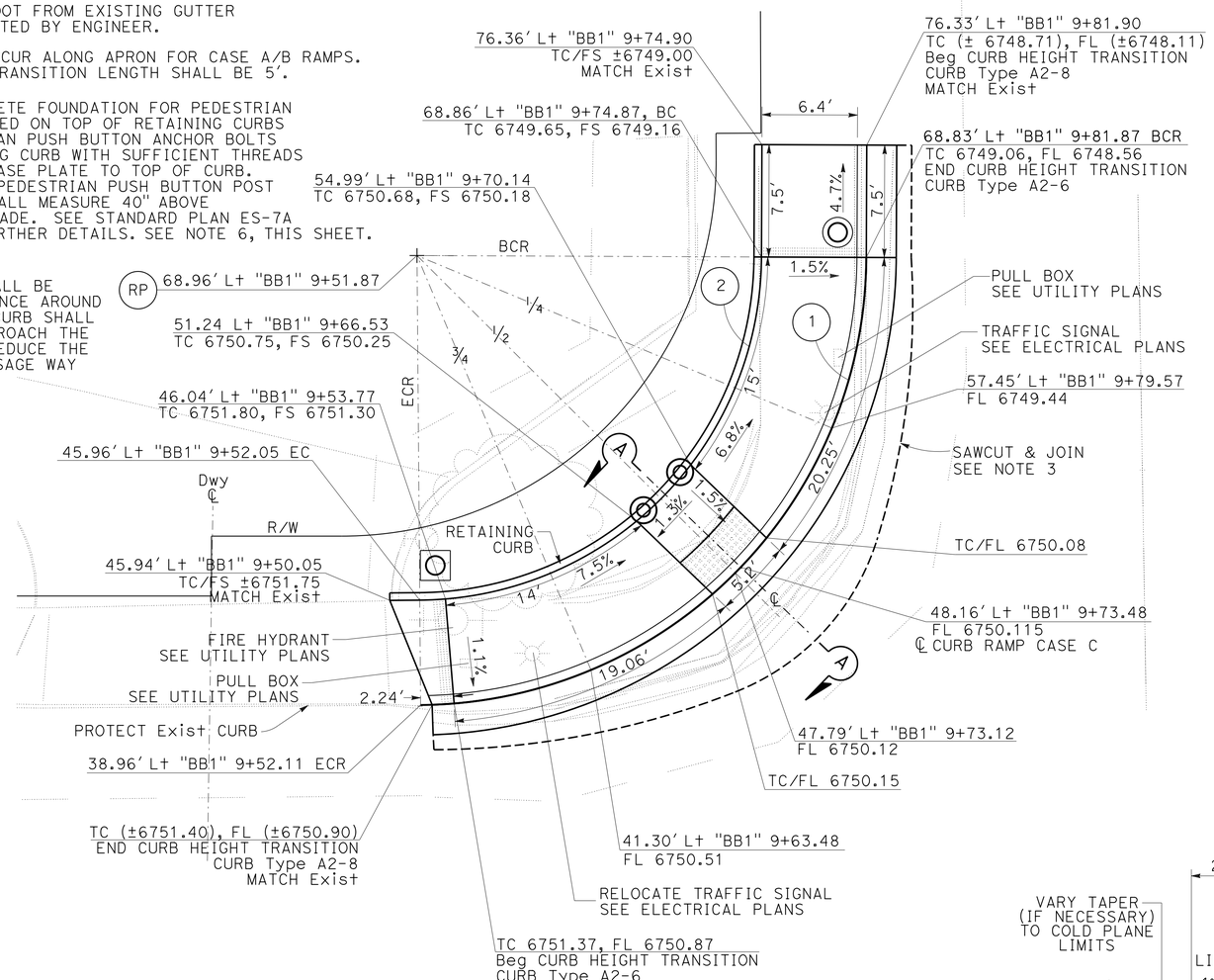

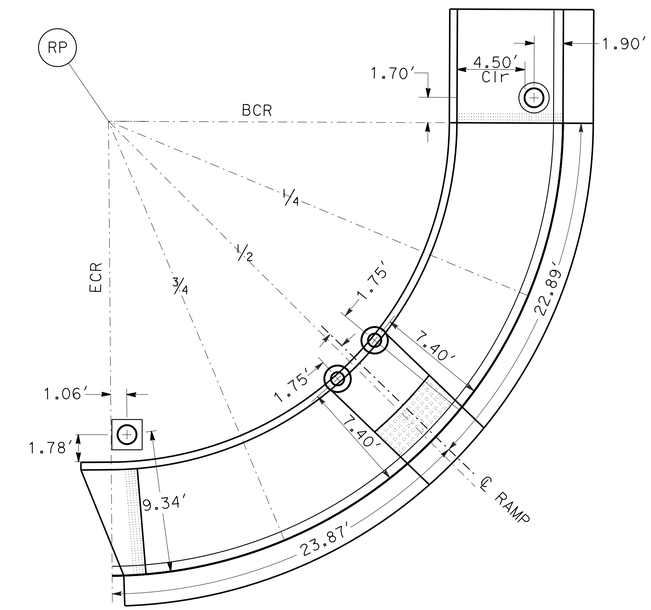

LAYOUT FOR ELECTRICAL DEVICES

(SEE ELECTRICAL PLANS)

ELECTRICAL DEVICE LEGEND:

- TRAFFIC/PEDESTRIAN DEVICE, SEE ELECTRICAL PLANS

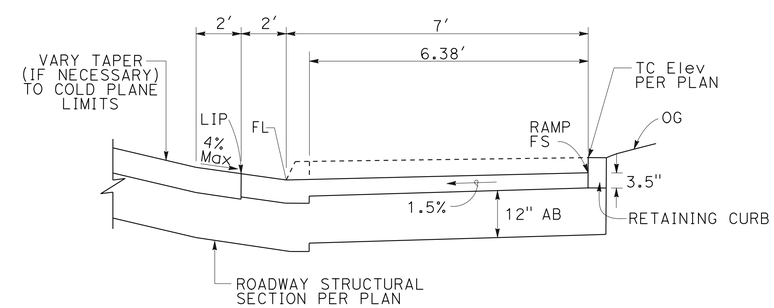

SECTION A-A

(NO SCALE)

"BB1" LINE — 9+50 — ROUTE 18 BIG BEAR Blvd — 10

4 **REPLACED PER ADDENDUM No. 4 DATED FEBRUARY 17, 2016**

CONSTRUCTION DETAILS
LOCATION #1
CURB RAMP
CASE C
SCALE 1"= 5'

C-1

STATE OF CALIFORNIA - DEPARTMENT OF TRANSPORTATION
Caltrans DESIGN

FUNCTIONAL SUPERVISOR: JUSTINE NIU
CALCULATED-DESIGNED BY: MOHAMMAD ABDRABOH
CHECKED BY: ALAN R. BISI
REVISED BY / DATE REVISED

LAST REVISION 06-26-15
DATE PLOTTED => 16-FEB-2016
TIME PLOTTED => 15:44

Dist	COUNTY	ROUTE	POST MILES TOTAL PROJECT	SHEET No.	TOTAL SHEETS
08	SBd	18	49.0/51.7	36	171

4

REGISTERED CIVIL ENGINEER 6-26-15 DATE

6-26-15
PLANS APPROVAL DATE

REGISTERED PROFESSIONAL ENGINEER ALAN R. BISI No. 62808 Exp. 06-30-16 CIVIL STATE OF CALIFORNIA

THE STATE OF CALIFORNIA OR ITS OFFICERS OR AGENTS SHALL NOT BE RESPONSIBLE FOR THE ACCURACY OR COMPLETENESS OF SCANNED COPIES OF THIS PLAN SHEET.

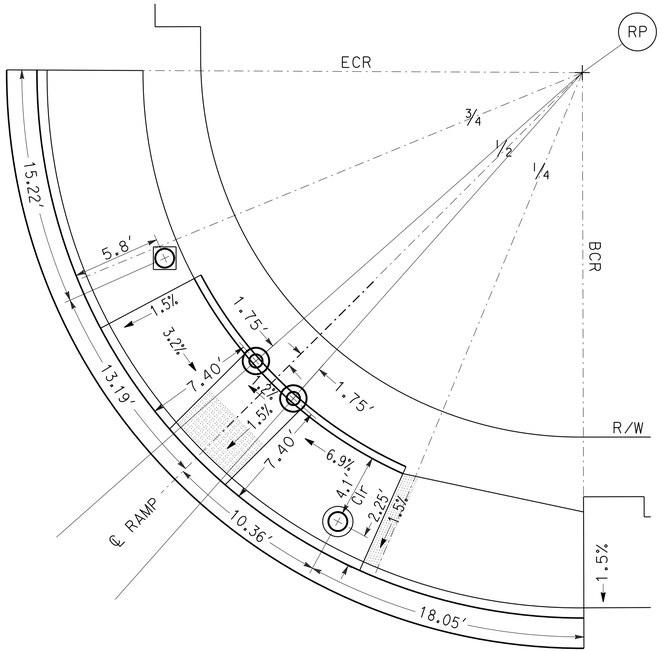

LAYOUT FOR ELECTRICAL DEVICES
(SEE ELECTRICAL PLANS)

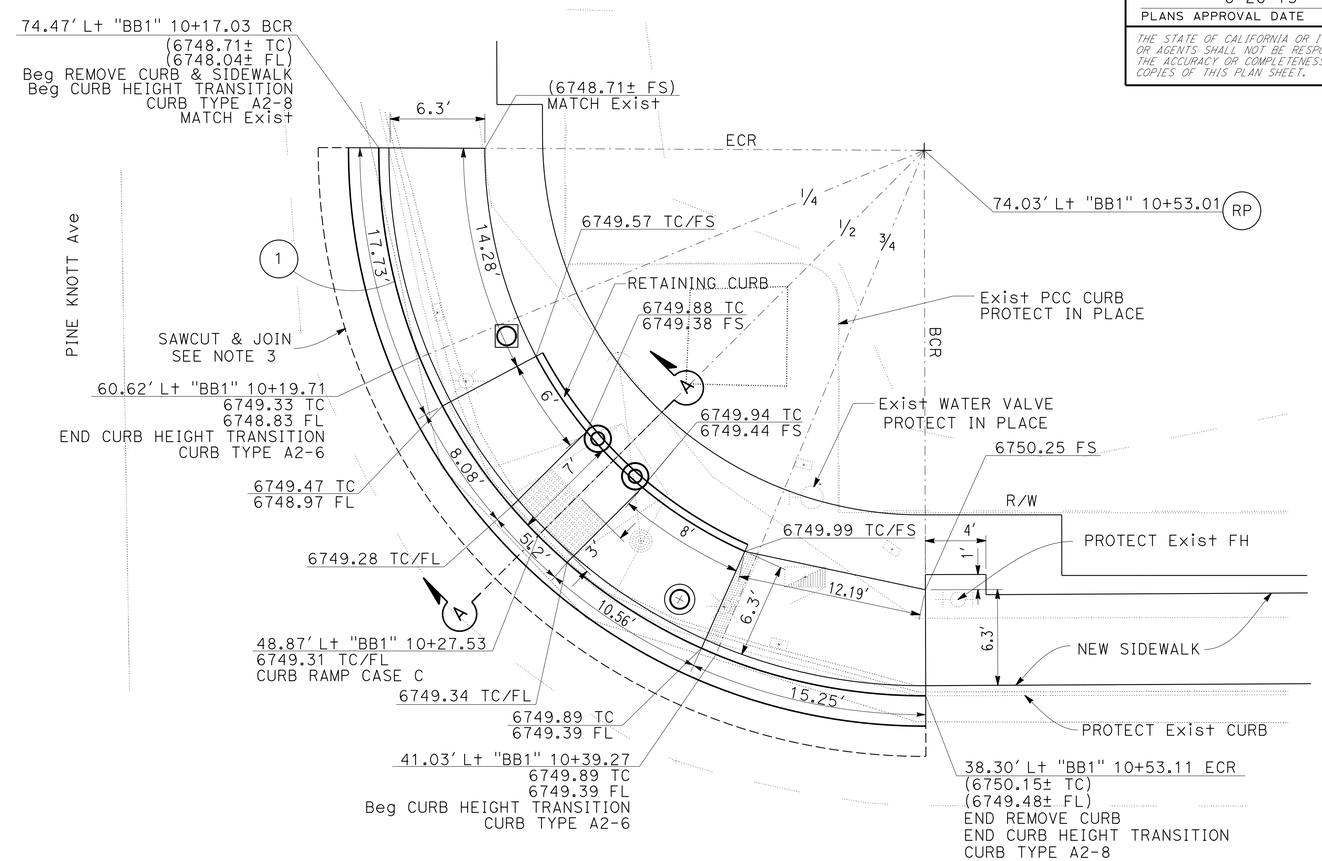

CURVE DATA

No. ⊕	R	Δ	T	L
1	36'	90°25'35"	36.27'	56.82'

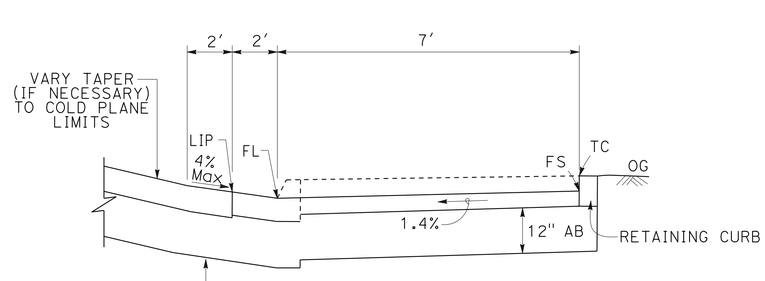

SECTION A-A

4 **REPLACED PER ADDENDUM No. 4 DATED FEBRUARY 17, 2016**

CONSTRUCTION DETAILS
LOCATION 2
CURB RAMP
CASE C
SCALE 1"= 5'

C-2

STATE OF CALIFORNIA - DEPARTMENT OF TRANSPORTATION
Caltrans® **DESIGN**

FUNCTIONAL SUPERVISOR: JUSTINE NIU
CALCULATED-DESIGNED BY: MOHAMMAD ABDRABOH
CHECKED BY: ALAN R. BISI
REVISED BY
DATE REVISED

LAST REVISION 06-26-15
DATE PLOTTED => 16-FEB-2016
TIME PLOTTED => 15:44

Dist	COUNTY	ROUTE	POST MILES TOTAL PROJECT	SHEET No.	TOTAL SHEETS
08	SBd	18	49.0/51.7	38	171

REGISTERED CIVIL ENGINEER 6-26-15 DATE

6-26-15
PLANS APPROVAL DATE

REGISTERED PROFESSIONAL ENGINEER ALAN R. BISI No. 62808 Exp. 06-30-16 CIVIL STATE OF CALIFORNIA

THE STATE OF CALIFORNIA OR ITS OFFICERS OR AGENTS SHALL NOT BE RESPONSIBLE FOR THE ACCURACY OR COMPLETENESS OF SCANNED COPIES OF THIS PLAN SHEET.

"BB1" LINE — 14+50 — ROUTE 18 BIG BEAR Blvd — 15

CURVE DATA

No.	R	Δ	T	L
1	30′	89°33′44″	29.77′	46.89′
2	22.5′	74°45′00″	17.19′	29.35′

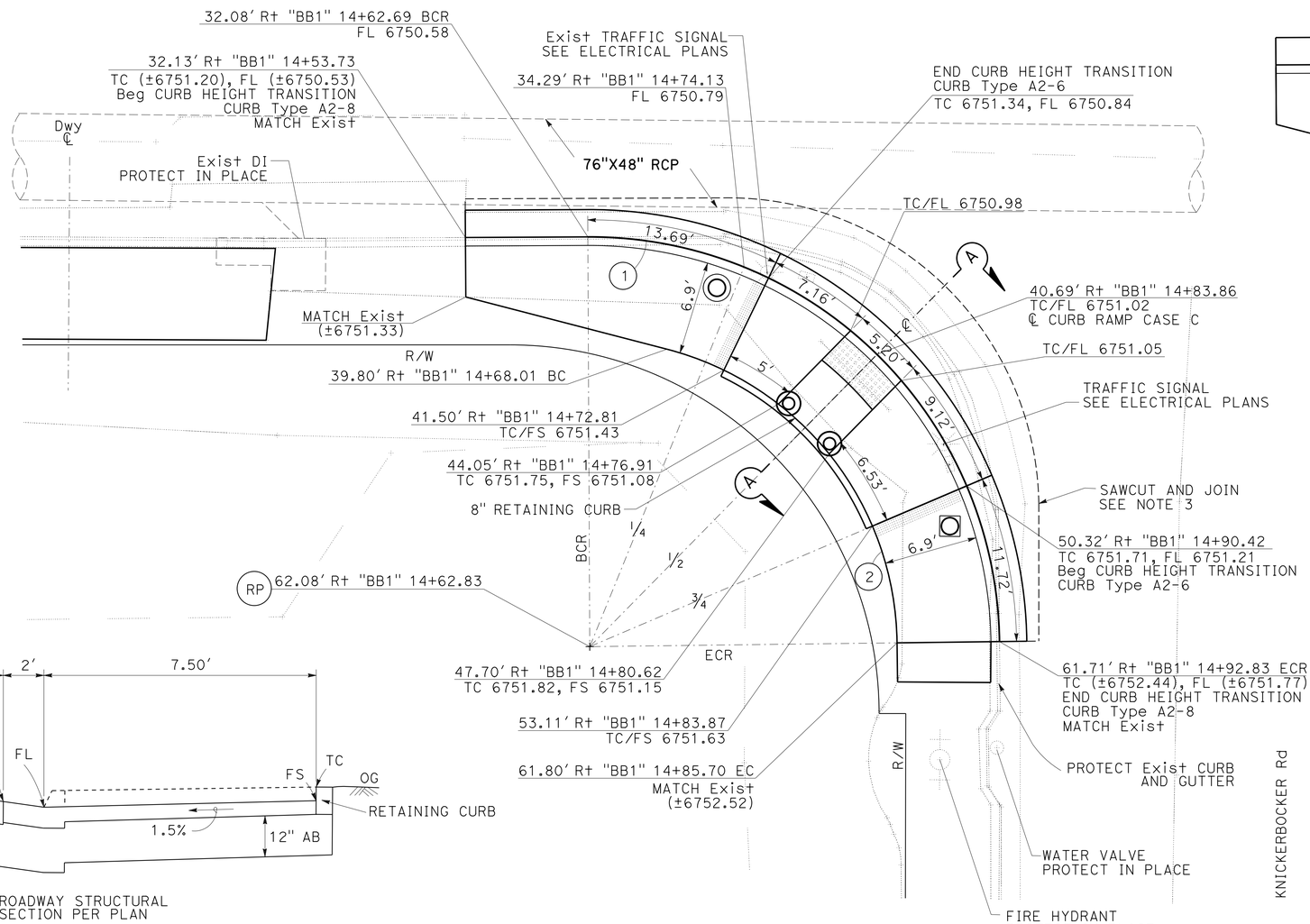

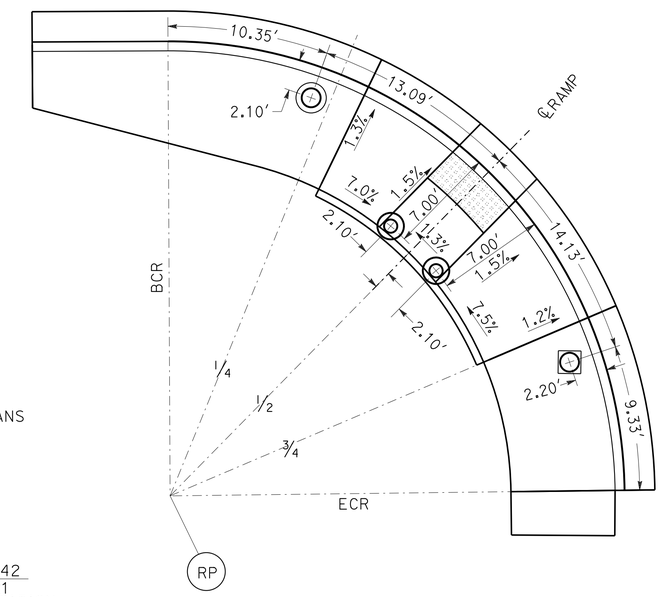

LAYOUT FOR ELECTRICAL DEVICES
(SEE ELECTRICAL PLANS)

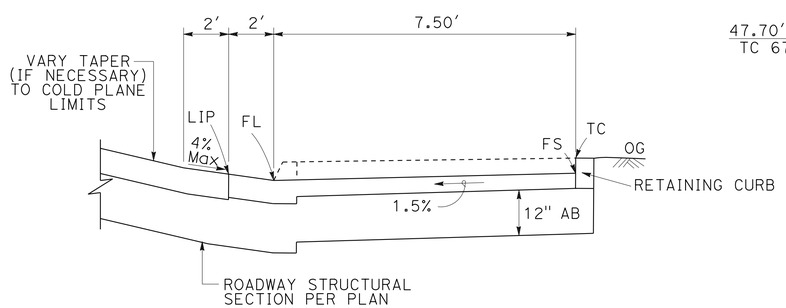

SECTION A-A

4 **REPLACED PER ADDENDUM No. 4 DATED FEBRUARY 17, 2016**

CONSTRUCTION DETAILS
LOCATION #4
CURB RAMP
CASE C
SCALE 1"= 5′

C-4

STATE OF CALIFORNIA - DEPARTMENT OF TRANSPORTATION
Caltrans® DESIGN
FUNCTIONAL SUPERVISOR: JUSTINE NIU
CALCULATED-DESIGNED BY: MOHAMMAD ABDRABOH
CHECKED BY: ALAN R. BISI
REVISED BY
DATE REVISED

LAST REVISION 06-26-15 | DATE PLOTTED => 16-FEB-2016 | TIME PLOTTED => 15:44

Dist	COUNTY	ROUTE	POST MILES TOTAL PROJECT	SHEET No.	TOTAL SHEETS
08	SBd	18	49.0/51.7	44	179

4

REGISTERED CIVIL ENGINEER 6-26-15 DATE

6-26-15
PLANS APPROVAL DATE

REGISTERED PROFESSIONAL ENGINEER ALAN R. BISI No. 62808 Exp. 06-30-16 CIVIL STATE OF CALIFORNIA

THE STATE OF CALIFORNIA OR ITS OFFICERS OR AGENTS SHALL NOT BE RESPONSIBLE FOR THE ACCURACY OR COMPLETENESS OF SCANNED COPIES OF THIS PLAN SHEET.

LEGEND:

REMOVE SLOPE PAVING LIMITS

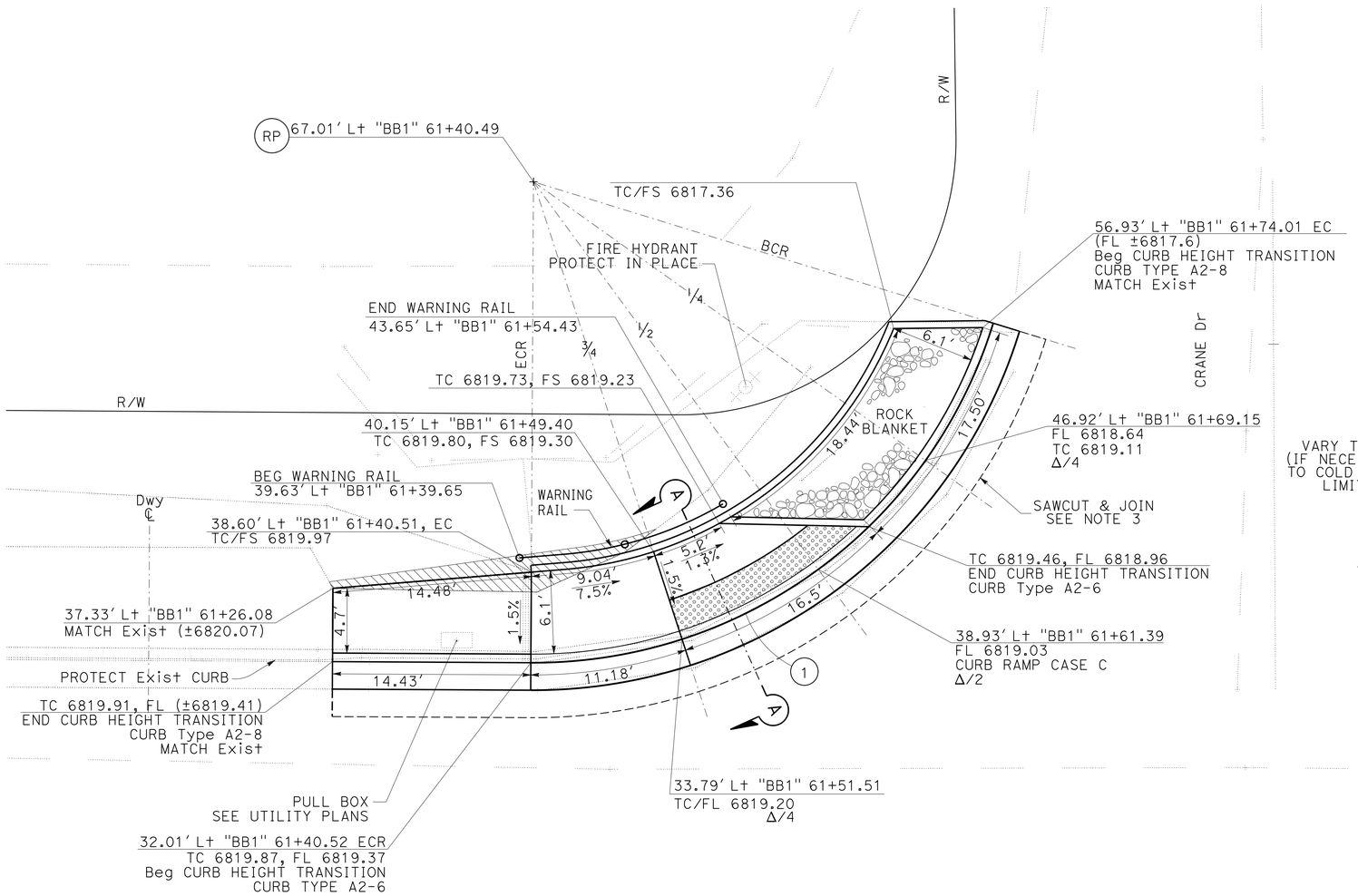

CURVE DATA

No. ⊕	R	Δ	T	L
1	35.0'	73°13'02"	26.00'	44.73'

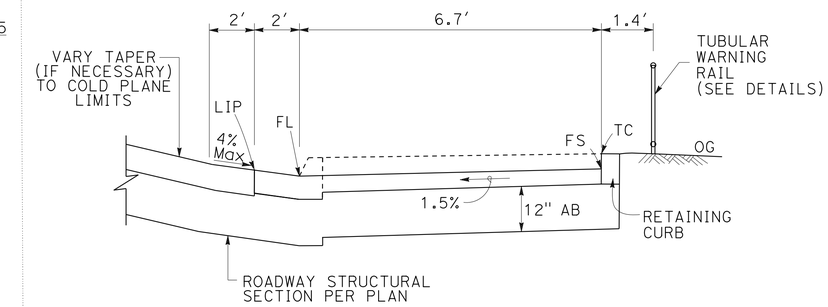

SECTION A-A

4 **REPLACED PER ADDENDUM No. 4 DATED FEBRUARY 17, 2016**

CONSTRUCTION DETAILS
LOCATION #10
CURB RAMP

CASE C

SCALE 1"= 5'

C-10

REVISED BY	DATE REVISED
MOHAMMAD ABDRABOH	ALAN R. BISI
CALCULATED-DESIGNED BY	CHECKED BY
FUNCTIONAL SUPERVISOR	JUSTINE NIU

STATE OF CALIFORNIA - DEPARTMENT OF TRANSPORTATION

Caltrans® **DESIGN**

LAST REVISION 06-26-15 | DATE PLOTTED => 16-FEB-2016 | TIME PLOTTED => 15:44

Dist	COUNTY	ROUTE	POST MILES TOTAL PROJECT	SHEET No.	TOTAL SHEETS
08	SBd	18	49.0/51.7	50	179

REGISTERED CIVIL ENGINEER 6-26-15 DATE

6-26-15
PLANS APPROVAL DATE

REGISTERED PROFESSIONAL ENGINEER ALAN R. BISI No. 62808 Exp. 06-30-16 CIVIL STATE OF CALIFORNIA

THE STATE OF CALIFORNIA OR ITS OFFICERS OR AGENTS SHALL NOT BE RESPONSIBLE FOR THE ACCURACY OR COMPLETENESS OF SCANNED COPIES OF THIS PLAN SHEET.

NOTE:

* TRUNCATED DOMES SHALL BE ALIGNED TOWARDS OPPOSING RAMP.

CURVE DATA

No. ⊕	R	Δ	T	L
1	35′	90°11′42"	35.12′	55.10′
2	20.0′	62°59′15"	12.25	21.99′

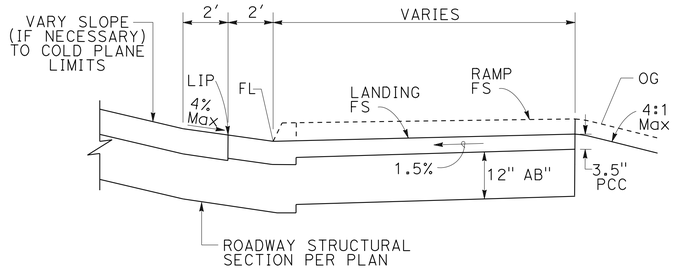

RAMP TYPICAL SECTION

NO SCALE

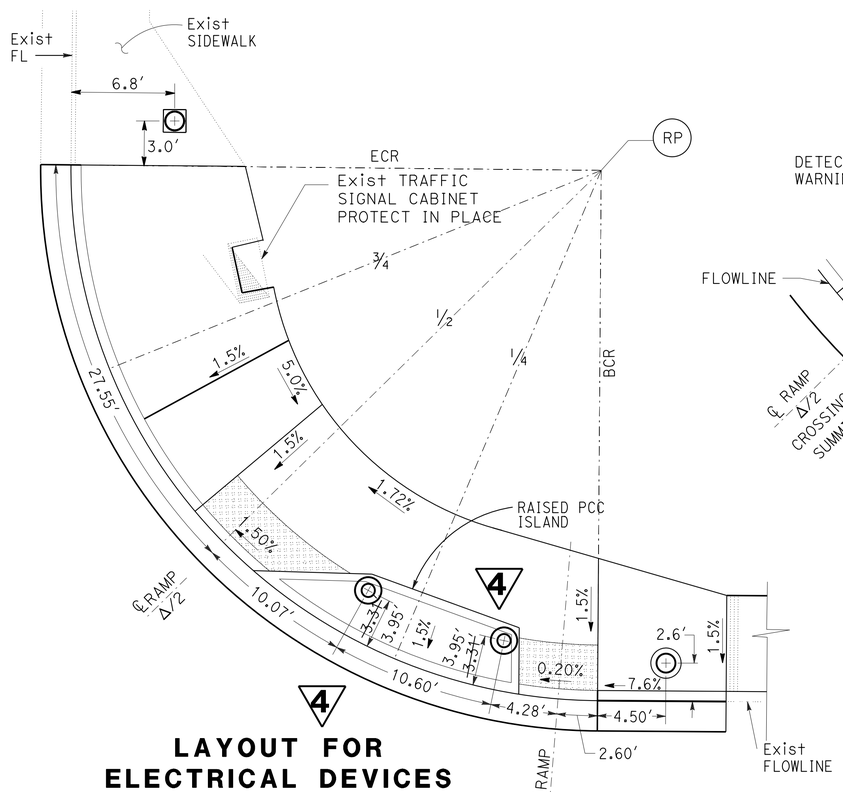

LAYOUT FOR ELECTRICAL DEVICES AND RAMP SLOPES

(SEE ELECTRICAL PLANS)

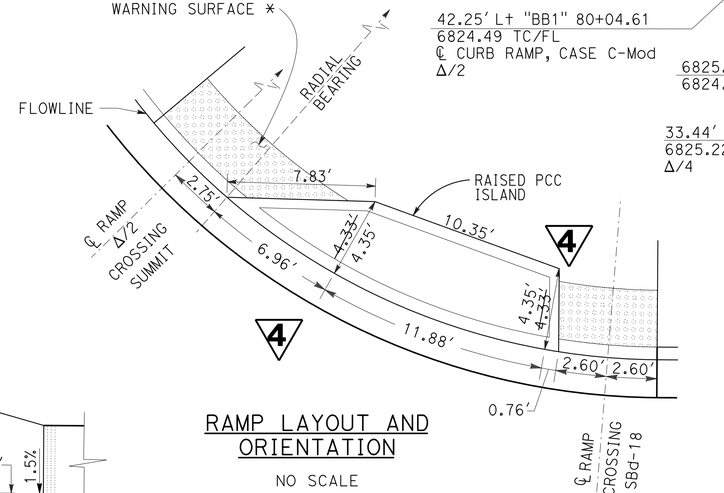

RAMP LAYOUT AND ORIENTATION

NO SCALE

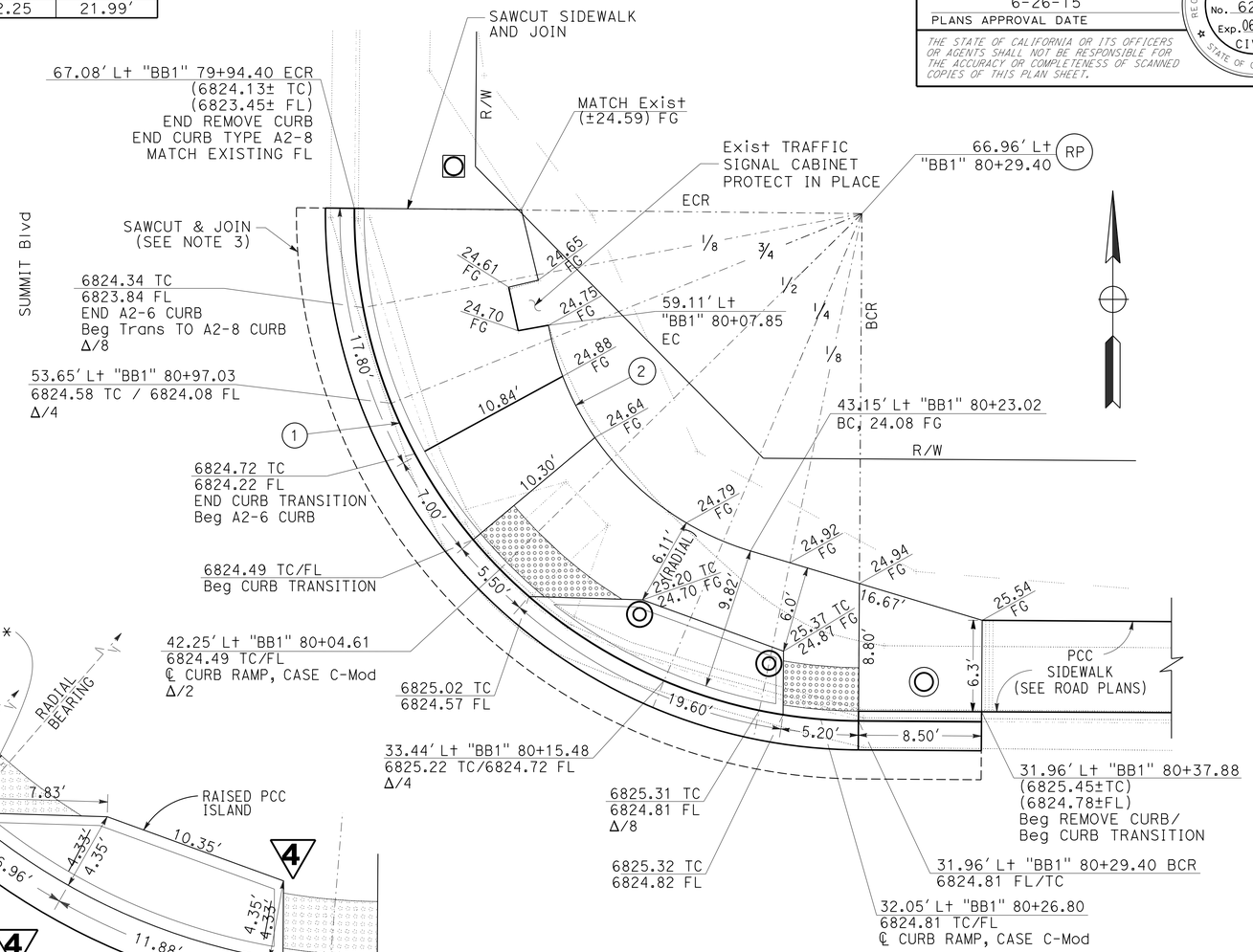

4 **REPLACED PER ADDENDUM No. 4 DATED FEBRUARY 17, 2016**

CONSTRUCTION DETAILS

LOCATION #16 CURB RAMP

CASE C-MODIFIED

SCALE 1"= 5′

C-16

STATE OF CALIFORNIA - DEPARTMENT OF TRANSPORTATION

Caltrans® **DESIGN**

FUNCTIONAL SUPERVISOR: JUSTINE NIU

CALCULATED-DESIGNED BY: MOHAMMAD ABDRABOH

CHECKED BY: ALAN R. BISI

REVISED BY | DATE REVISED

LAST REVISION 06-26-15 | DATE PLOTTED => 16-FEB-2016 | TIME PLOTTED => 15:44

Dist	COUNTY	ROUTE	POST MILES TOTAL PROJECT	SHEET No.	TOTAL SHEETS
08	SBd	18	49.0/51.7	51	171

REGISTERED CIVIL ENGINEER 6-26-15 DATE

6-26-15
PLANS APPROVAL DATE

REGISTERED PROFESSIONAL ENGINEER ALAN R. BISI No. 62808 Exp. 06-30-16 CIVIL STATE OF CALIFORNIA

THE STATE OF CALIFORNIA OR ITS OFFICERS OR AGENTS SHALL NOT BE RESPONSIBLE FOR THE ACCURACY OR COMPLETENESS OF SCANNED COPIES OF THIS PLAN SHEET.

4

NOTE:

* TRUNCATED DOMES SHALL BE ALIGNED TOWARDS OPPOSING RAMP.

LEGEND:

REMOVE SLOPE PAVING LIMITS

CURVE DATA

No. ⊕	R	Δ	T	L
1	25.00′	88°33′04"	24.41′	38.67′
2	17.00′	57°24′40"	9.31′	17.03′

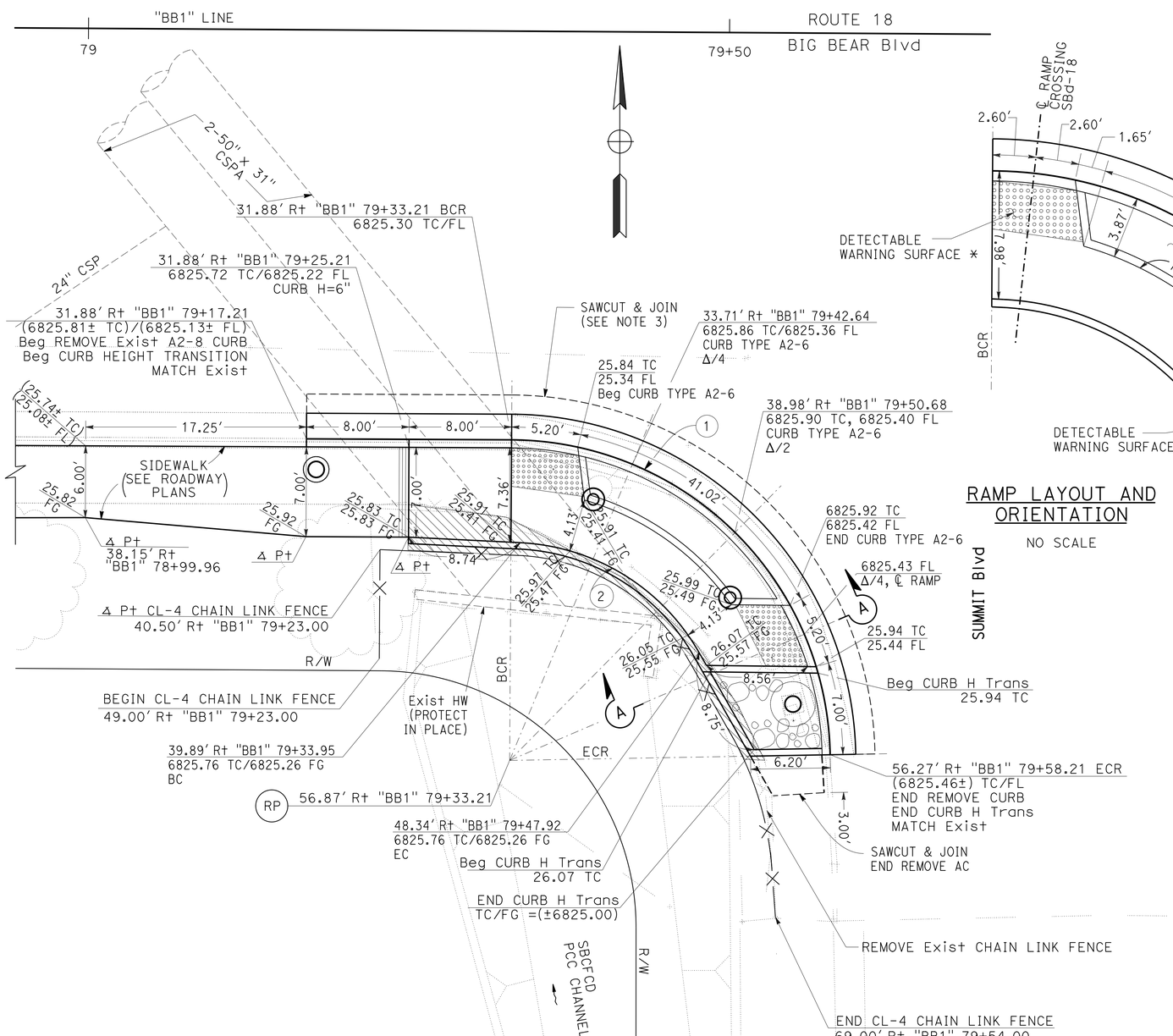

RAMP LAYOUT AND ORIENTATION

NO SCALE

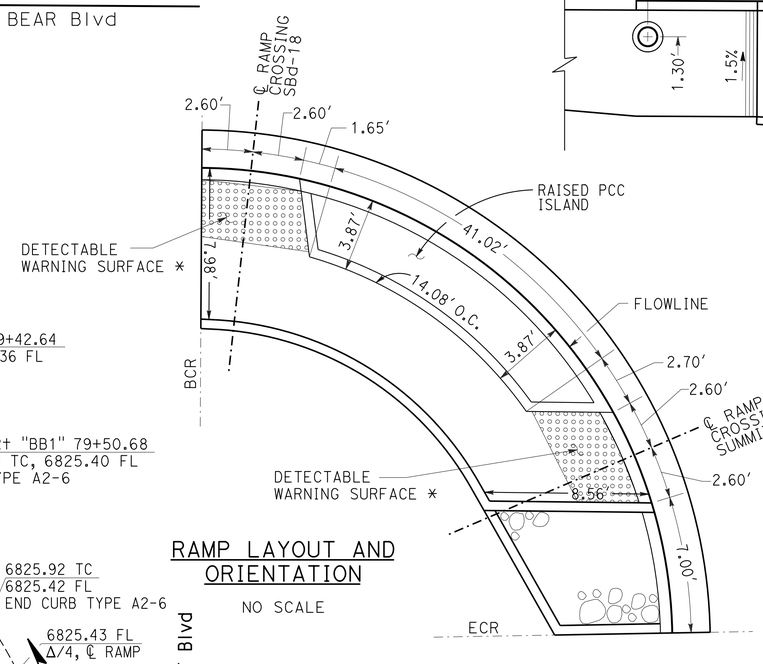

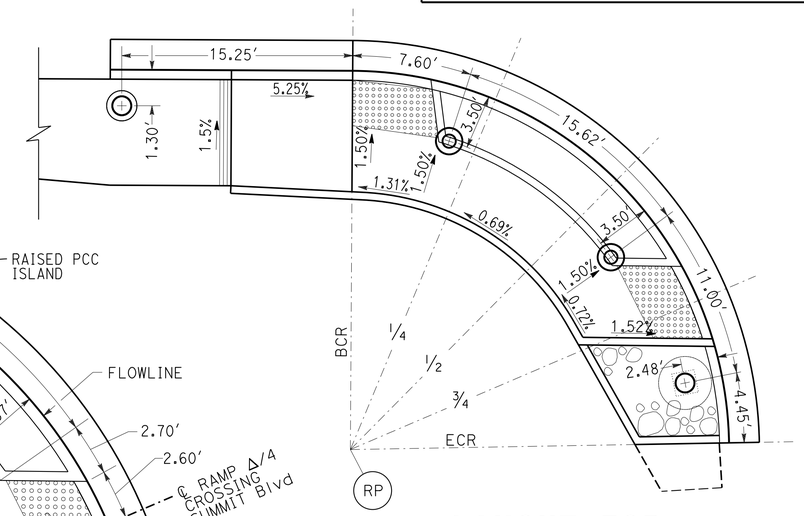

LAYOUT FOR ELECTRICAL DEVICES AND RAMP SLOPES

(SEE ELECTRICAL PLANS)

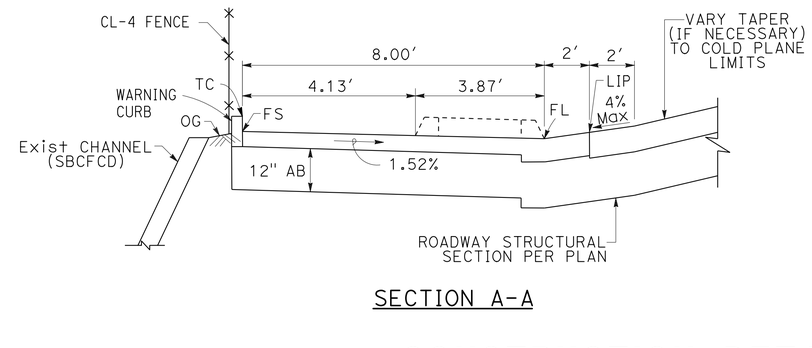

SECTION A-A

CONSTRUCTION DETAILS
LOCATION #17
CURB RAMP

CASE C-MODIFIED
SCALE 1"= 5′

C-17

4 **REPLACED PER ADDENDUM No. 4 DATED FEBRUARY 17, 2016**

REVISED BY | DATE REVISED
MOHAMMAD ABDRABOH | ALAN R. BISI
CALCULATED-DESIGNED BY | CHECKED BY
FUNCTIONAL SUPERVISOR: JUSTINE NIU

STATE OF CALIFORNIA - DEPARTMENT OF TRANSPORTATION
Caltrans
DESIGN

LAST REVISION 06-26-15 | DATE PLOTTED => 16-FEB-2016 | TIME PLOTTED => 15:44

Dist	COUNTY	ROUTE	POST MILES TOTAL PROJECT	SHEET No.	TOTAL SHEETS
08	SBd	18	49.0/51.7	54	179

REGISTERED CIVIL ENGINEER 6-26-15 DATE

6-26-15
PLANS APPROVAL DATE

REGISTERED PROFESSIONAL ENGINEER ALAN R. BISI No. 62808 Exp. 06-30-16 CIVIL STATE OF CALIFORNIA

THE STATE OF CALIFORNIA OR ITS OFFICERS OR AGENTS SHALL NOT BE RESPONSIBLE FOR THE ACCURACY OR COMPLETENESS OF SCANNED COPIES OF THIS PLAN SHEET.

NOTES:

* TRUNCATED DOMES SHALL BE ALIGNED TOWARDS OPPOSING RAMPS.

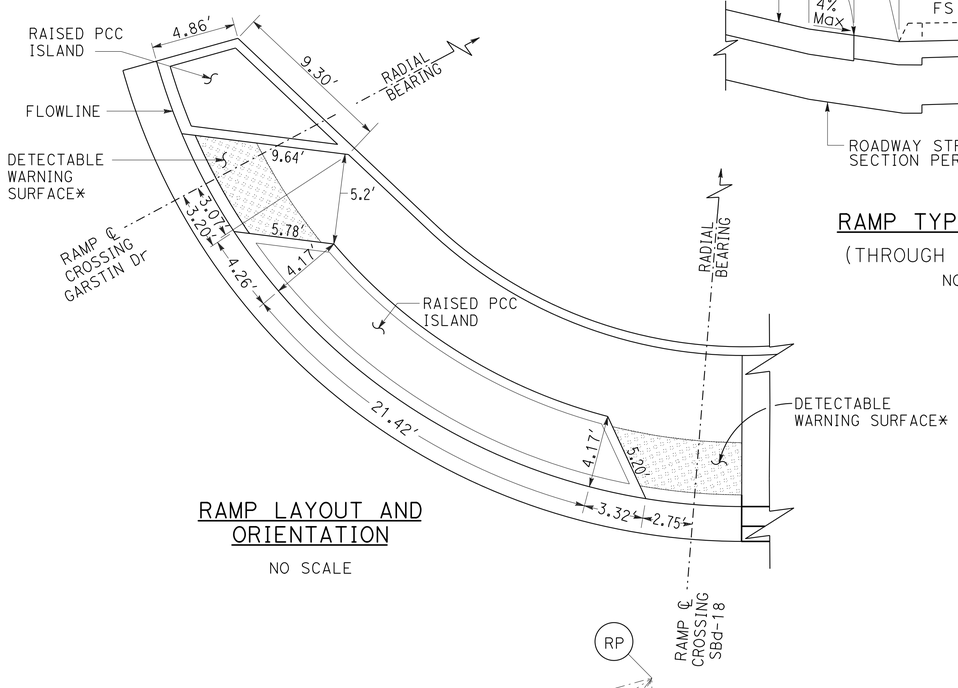

RAMP LAYOUT AND ORIENTATION

NO SCALE

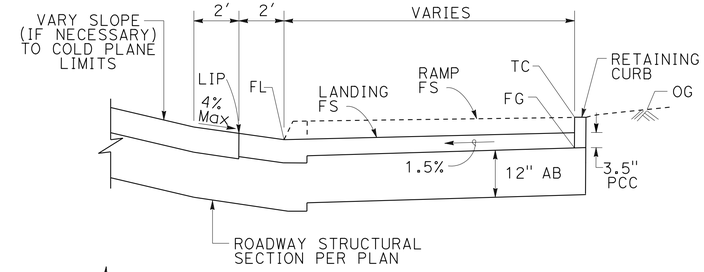

RAMP TYPICAL SECTION

(THROUGH RAMP OPENING)

NO SCALE

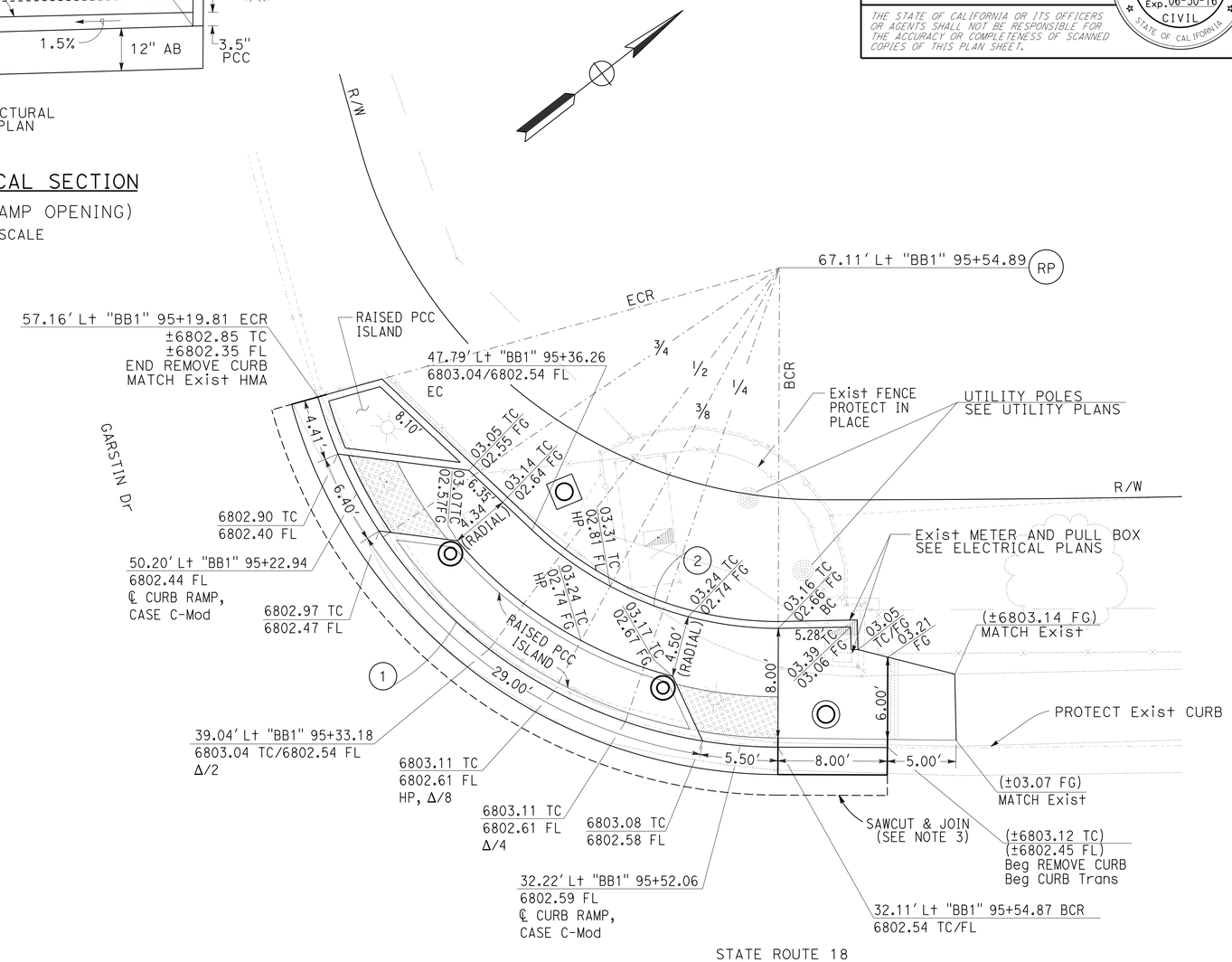

CURVE DATA

No. ⊕	R	Δ	T	L
1	35′	74°10′40"	26.46′	45.31′
2	26.33′	43°07′16"	10.40′	19.82′

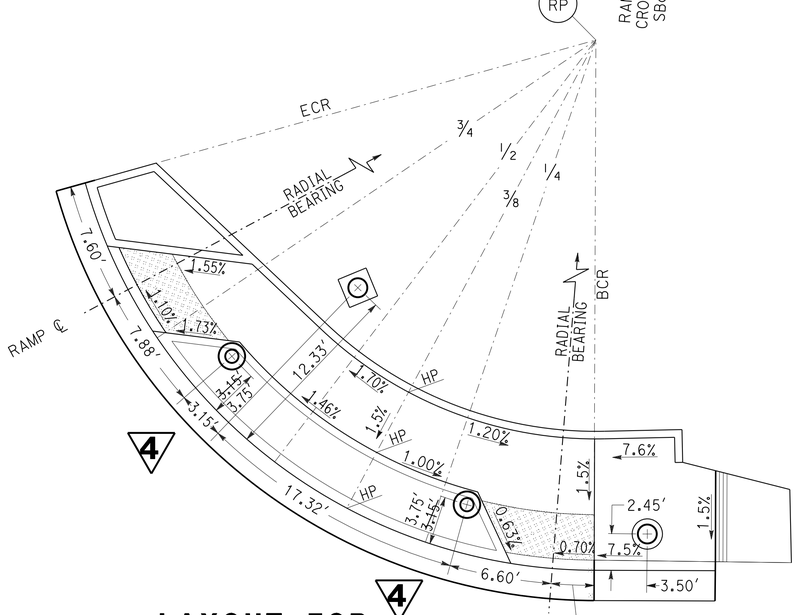

LAYOUT FOR ELECTRICAL DEVICES AND RAMP SLOPES

(SEE ELECTRICAL PLANS)

95+00 — ROUTE 18 — "BB1" LINE — 95+50

BIG BEAR BLVD

4 REPLACED PER ADDENDUM No. 4 DATED FEBRUARY 17, 2016

CONSTRUCTION DETAILS
LOCATION #20
CURB RAMP

CASE C-MODIFIED

SCALE 1"= 5′

C-20

STATE OF CALIFORNIA - DEPARTMENT OF TRANSPORTATION

Caltrans® DESIGN

FUNCTIONAL SUPERVISOR: JUSTINE NIU

CALCULATED-DESIGNED BY: MOHAMMAD ABDRABOH

CHECKED BY: ALAN R. BISI

REVISED BY / DATE REVISED

LAST REVISION 06-26-15

DATE PLOTTED => 16-FEB-2016
TIME PLOTTED => 15:44

Dist	COUNTY	ROUTE	POST MILES TOTAL PROJECT	SHEET No.	TOTAL SHEETS
08	SBd	18	49.0/51.7	55	171

REGISTERED CIVIL ENGINEER 6-26-15 DATE

6-26-15
PLANS APPROVAL DATE

REGISTERED PROFESSIONAL ENGINEER ALAN R. BISI No. 62808 Exp. 06-30-16 CIVIL STATE OF CALIFORNIA

THE STATE OF CALIFORNIA OR ITS OFFICERS OR AGENTS SHALL NOT BE RESPONSIBLE FOR THE ACCURACY OR COMPLETENESS OF SCANNED COPIES OF THIS PLAN SHEET.

4

NOTES:

* - REMOVE PORTION OF Exist ACCESS PATH AS NECESSARY TO FACILITATE CONSTRUCTION. CONTRACTOR TO CONSTRUCT SMOOTH TRANSITON TO Exist ACCESS PATH AND CURB RAMP TO SATISFACTION OF ENGINEER.

**- TRUNCATED DOMES SHALL BE ALIGNED TOWARDS OPPOSING RAMPS.

"BB1" LINE 95+50 — ROUTE 18 BIG BEAR Blvd — 96

STATE ROUTE 18

CURVE DATA

No. ⊕	R	Δ	T	L
1	40′	111°56′32"	59.24′	78.15′

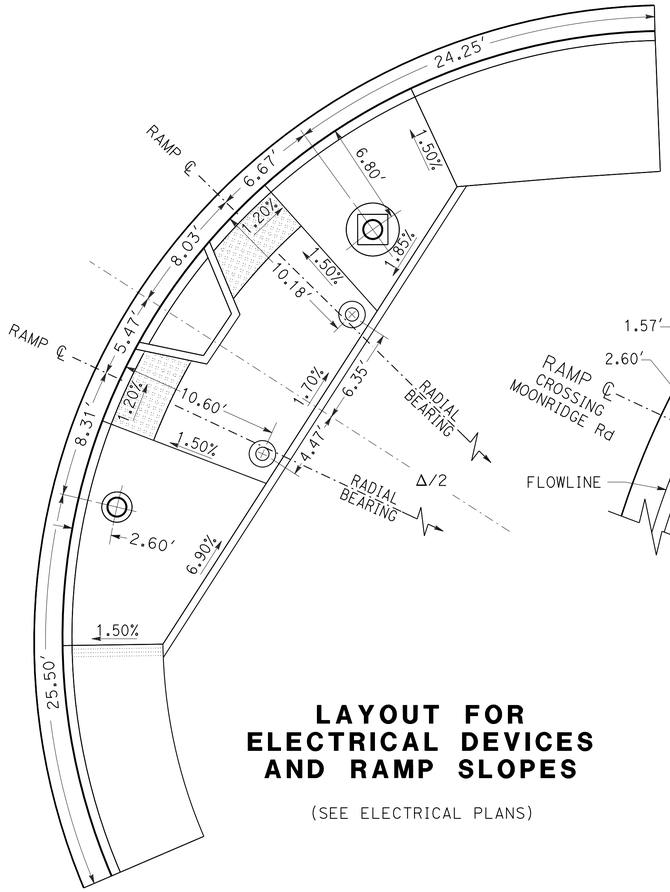

LAYOUT FOR ELECTRICAL DEVICES AND RAMP SLOPES

(SEE ELECTRICAL PLANS)

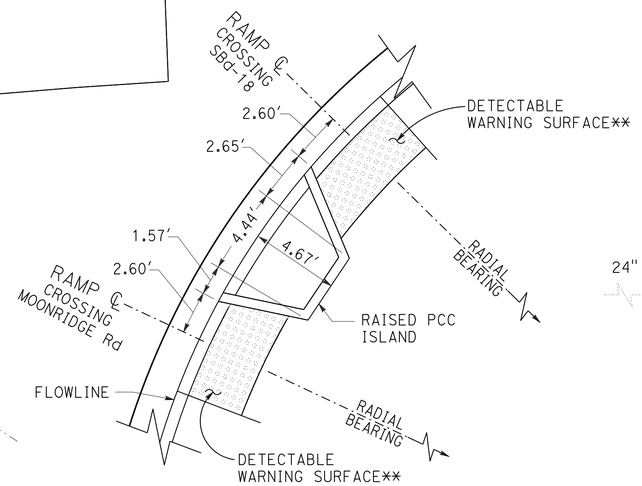

RAMP LAYOUT AND ORIENTATION

NO SCALE

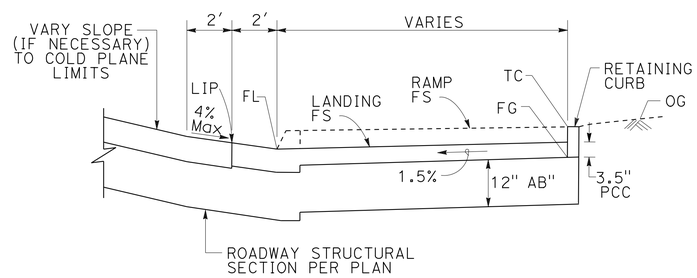

RAMP TYPICAL SECTION

NO SCALE

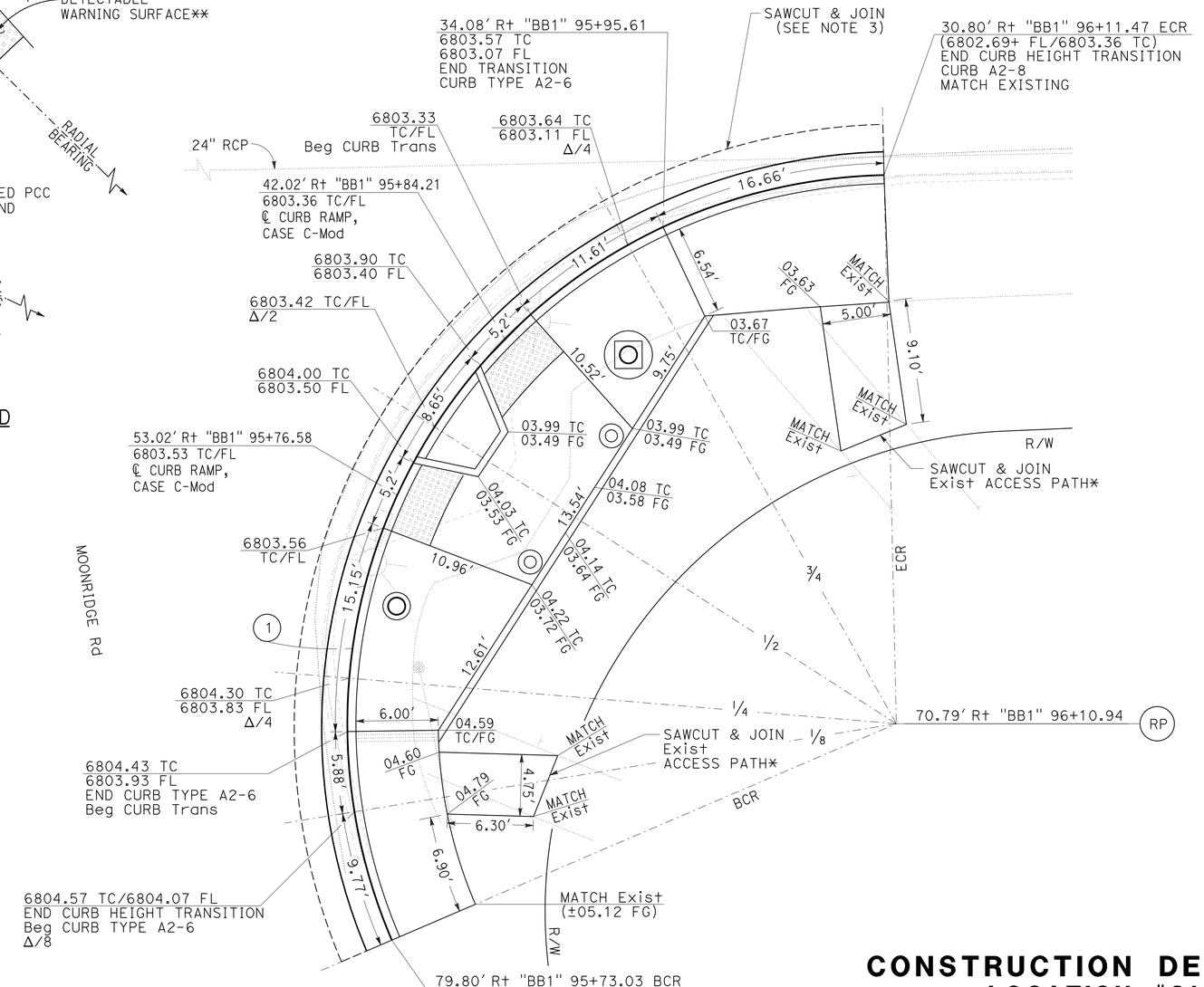

CONSTRUCTION DETAILS
LOCATION #21
CURB RAMP

CASE C-MODIFIED
SCALE 1"= 5′

C-21

4 **REPLACED PER ADDENDUM No. 4 DATED FEBRUARY 17, 2016**

REVISED BY | DATE REVISED
MOHAMMAD ABDRABOH | ALAN R. BISI
CALCULATED-DESIGNED BY | CHECKED BY
FUNCTIONAL SUPERVISOR | JUSTINE NIU

STATE OF CALIFORNIA - DEPARTMENT OF TRANSPORTATION
Caltrans® DESIGN

LAST REVISION 06-26-15 | DATE PLOTTED => 16-FEB-2016 | TIME PLOTTED => 15:44

Dist	COUNTY	ROUTE	POST MILES TOTAL PROJECT	SHEET No.	TOTAL SHEETS
08	SBd	18	49.0/51.7	58	171

REGISTERED CIVIL ENGINEER 6-26-15 DATE

6-26-15
PLANS APPROVAL DATE

REGISTERED PROFESSIONAL ENGINEER ALAN R. BISI No. 62808 Exp. 06-30-16 CIVIL STATE OF CALIFORNIA

THE STATE OF CALIFORNIA OR ITS OFFICERS OR AGENTS SHALL NOT BE RESPONSIBLE FOR THE ACCURACY OR COMPLETENESS OF SCANNED COPIES OF THIS PLAN SHEET.

CURVE DATA

No. ⊕	R	Δ	T	L
1	35′	87°00′30″	33.23′	53.17′

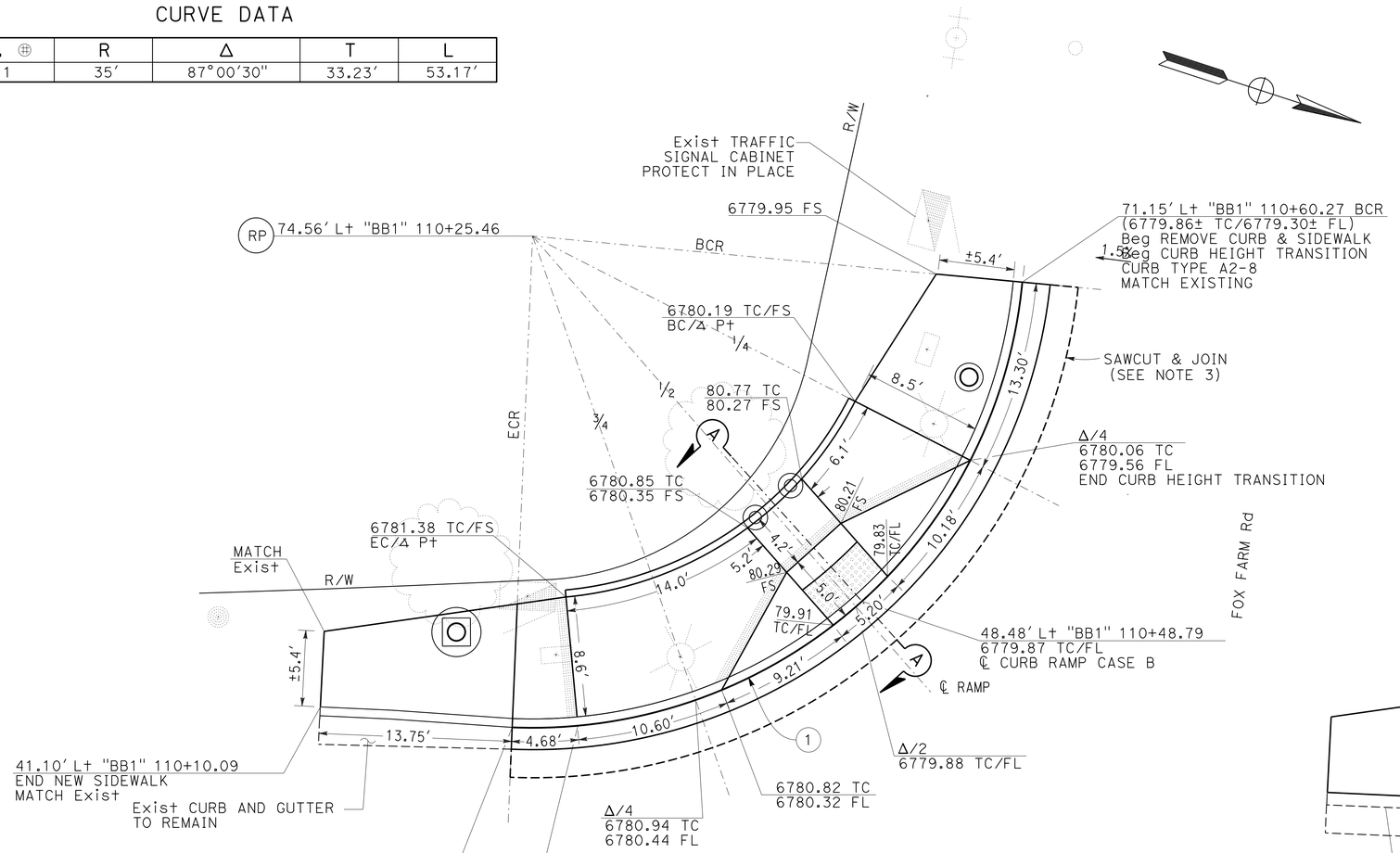

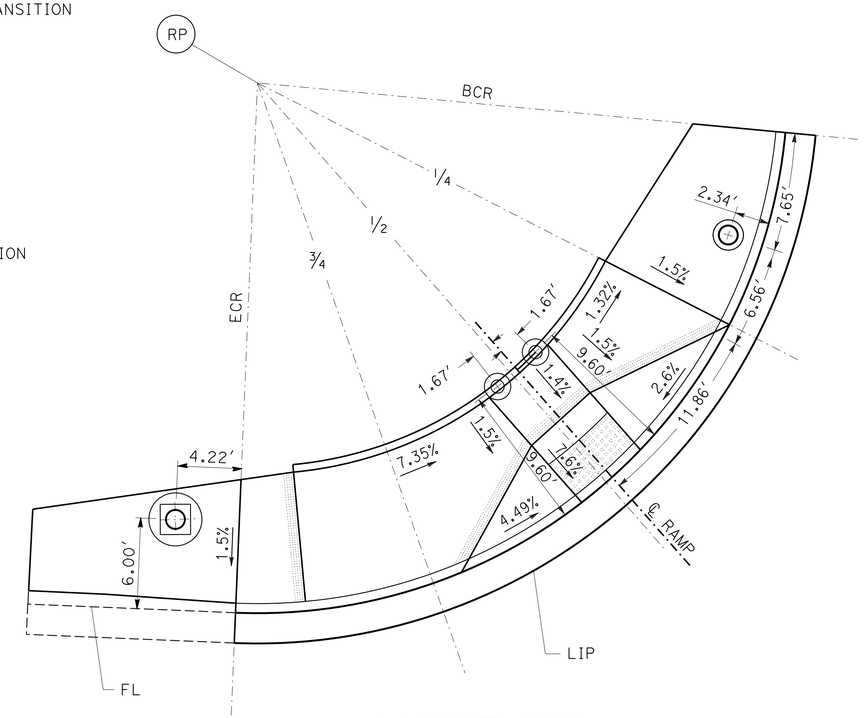

LAYOUT FOR ELECTRICAL DEVICES AND RAMP SLOPES

(SEE ELECTRICAL PLANS)

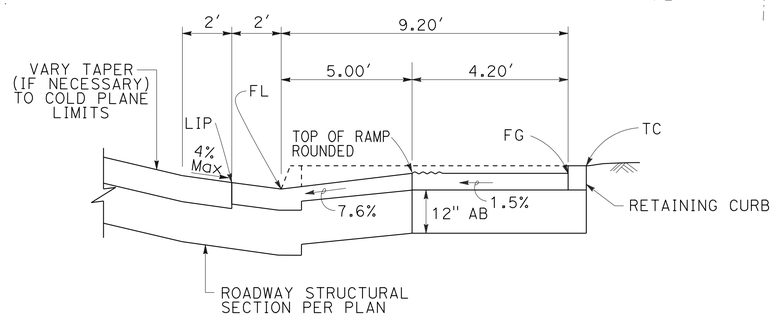

SECTION A-A

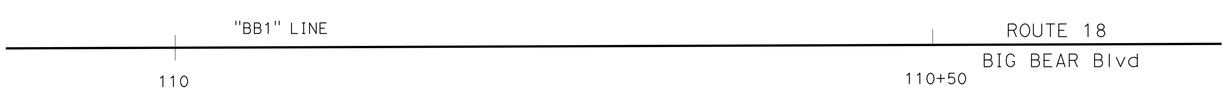

4 **REPLACED PER ADDENDUM No. 4 DATED FEBRUARY 17, 2016**

CONSTRUCTION DETAILS
LOCATION #24
CURB RAMP

CASE B
SCALE 1"= 5′

C-24

STATE OF CALIFORNIA - DEPARTMENT OF TRANSPORTATION
Caltrans DESIGN

FUNCTIONAL SUPERVISOR: JUSTINE NIU
CALCULATED-DESIGNED BY: MOHAMMAD ABDRABOH
CHECKED BY: ALAN R. BISI
REVISED BY
DATE REVISED

LAST REVISION 06-26-15
DATE PLOTTED => 16-FEB-2016
TIME PLOTTED => 15:44

Dist	COUNTY	ROUTE	POST MILES TOTAL PROJECT	SHEET No.	TOTAL SHEETS
08	SBd	18	49.0/51.7	59	171

REGISTERED CIVIL ENGINEER 6-26-15 DATE

6-26-15
PLANS APPROVAL DATE

REGISTERED PROFESSIONAL ENGINEER ALAN R. BISI No. 62808 Exp. 06-30-16 CIVIL STATE OF CALIFORNIA

THE STATE OF CALIFORNIA OR ITS OFFICERS OR AGENTS SHALL NOT BE RESPONSIBLE FOR THE ACCURACY OR COMPLETENESS OF SCANNED COPIES OF THIS PLAN SHEET.

4

CURVE DATA

No. ⊕	R	Δ	T	L
1	35′	81°13′23″	30.01′	49.62′

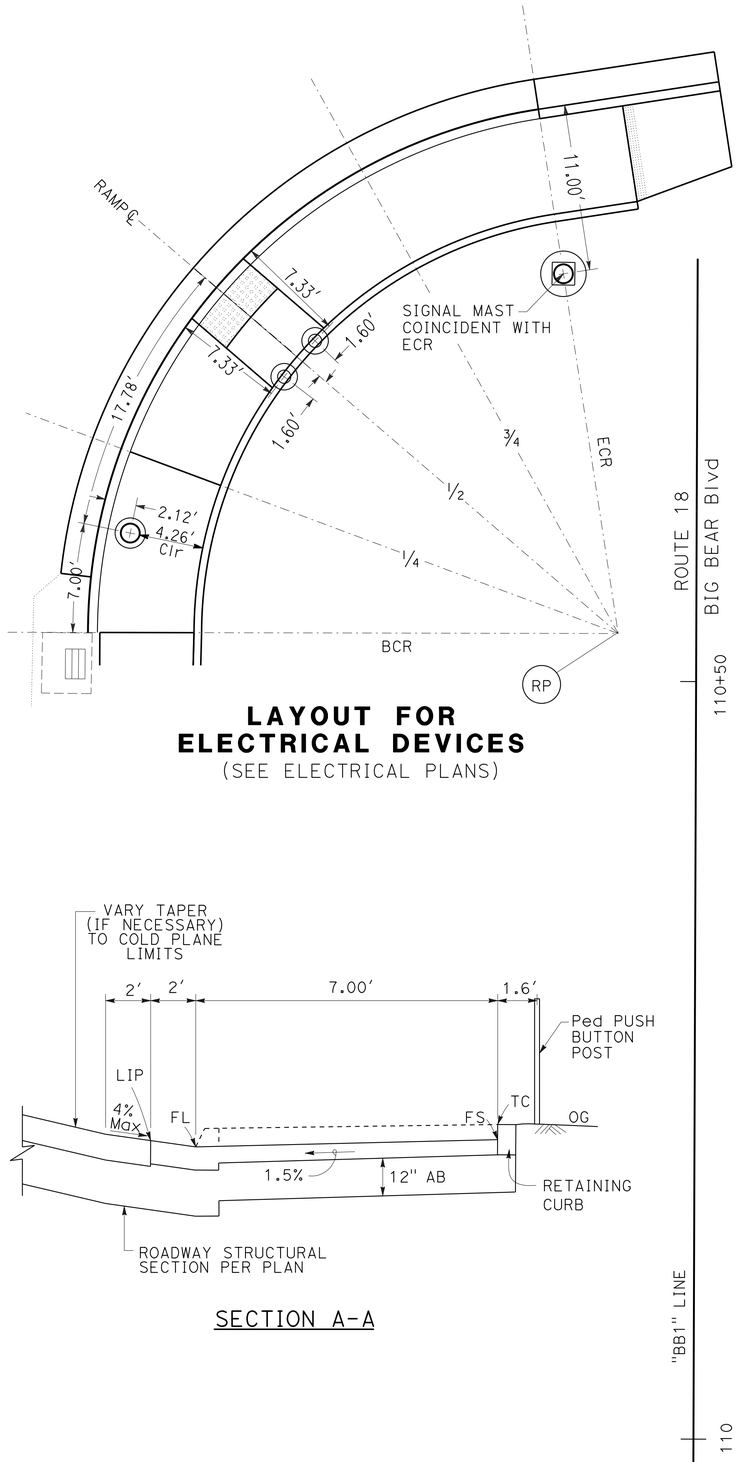

LAYOUT FOR ELECTRICAL DEVICES
(SEE ELECTRICAL PLANS)

SECTION A-A

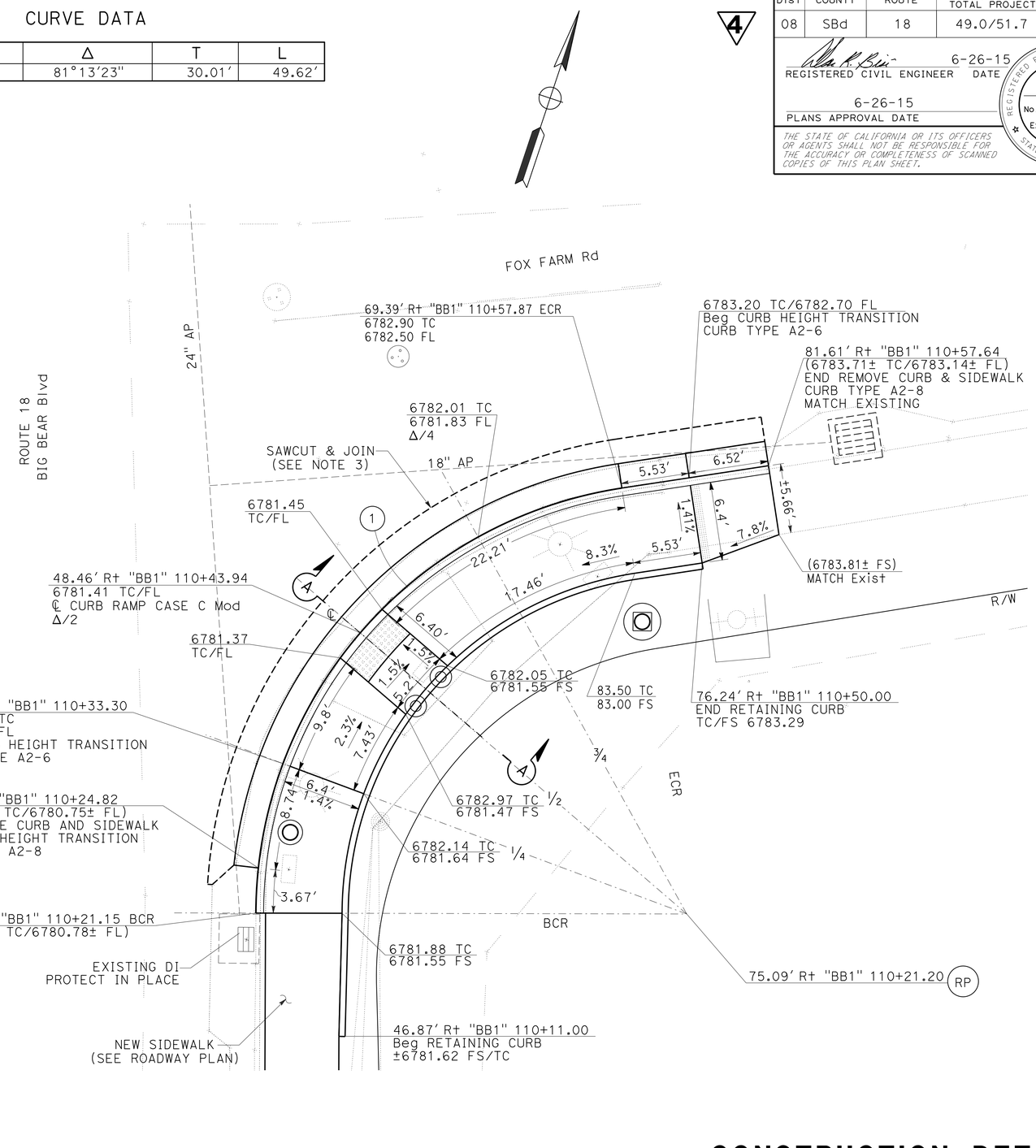

4 **REPLACED PER ADDENDUM No. 4 DATED FEBRUARY 17, 2016**

CONSTRUCTION DETAILS
LOCATION #25
CURB RAMP
CASE C
SCALE 1"= 5′

C-25

STATE OF CALIFORNIA - DEPARTMENT OF TRANSPORTATION
Caltrans® DESIGN

FUNCTIONAL SUPERVISOR: JUSTINE NIU
CALCULATED-DESIGNED BY: MOHAMMAD ABDRABOH
CHECKED BY: ALAN R. BISI
REVISED BY / DATE REVISED

LAST REVISION 06-26-15 | DATE PLOTTED => 16-FEB-2016 | TIME PLOTTED => 15:44

Dist	COUNTY	ROUTE	POST MILES TOTAL PROJECT	SHEET No.	TOTAL SHEETS
08	SBd	18	49.0/51.7	60	179

REGISTERED CIVIL ENGINEER 6-26-15 DATE

6-26-15
PLANS APPROVAL DATE

REGISTERED PROFESSIONAL ENGINEER ALAN R. BISI No. 62808 Exp. 06-30-16 CIVIL STATE OF CALIFORNIA

THE STATE OF CALIFORNIA OR ITS OFFICERS OR AGENTS SHALL NOT BE RESPONSIBLE FOR THE ACCURACY OR COMPLETENESS OF SCANNED COPIES OF THIS PLAN SHEET.

4

LEGEND:

REMOVE SLOPE PAVING LIMITS

CURVE DATA

No. ⊕	R	Δ	T	L
1	35′	93°48′10″	37.40′	57.30′

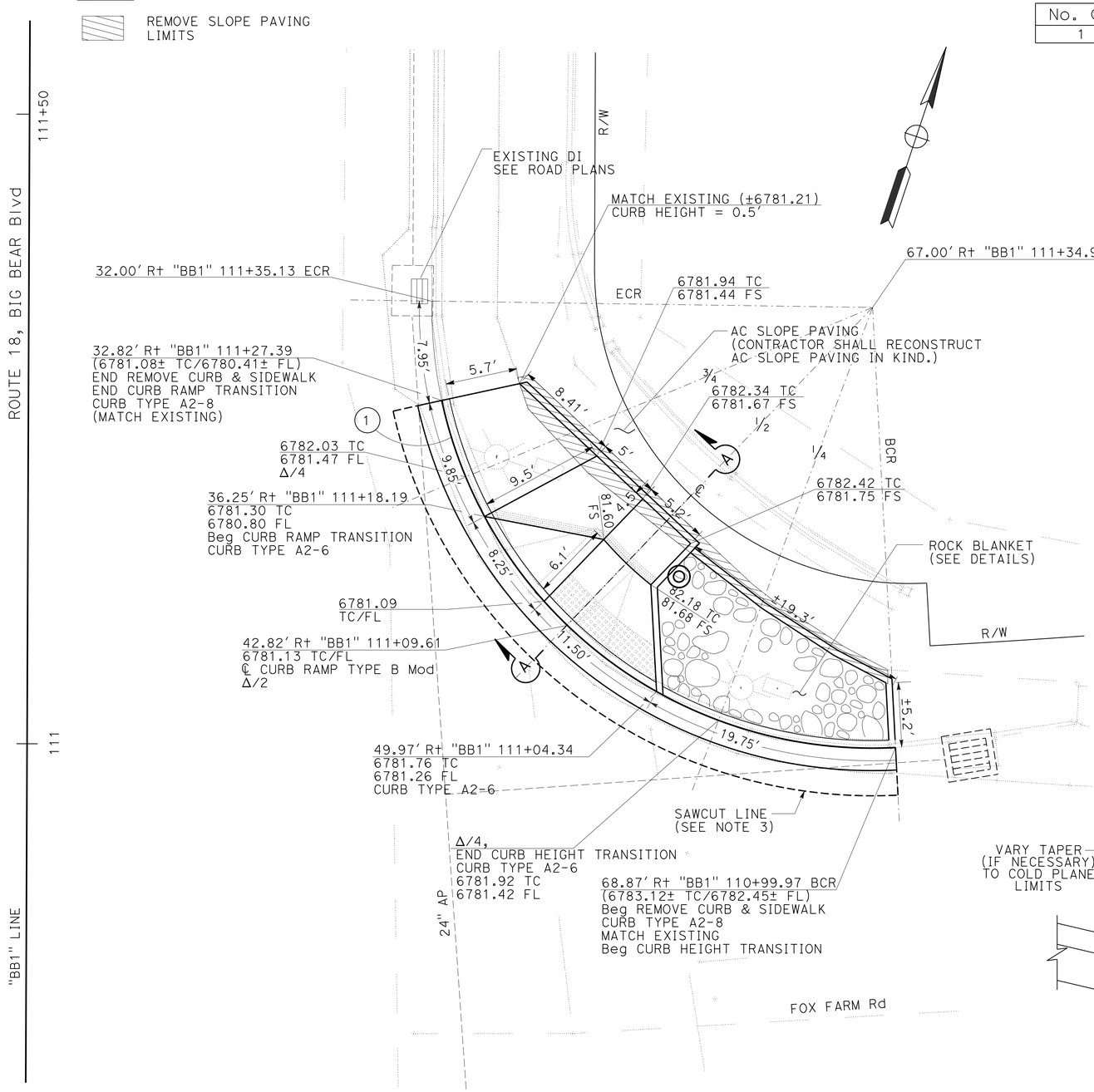

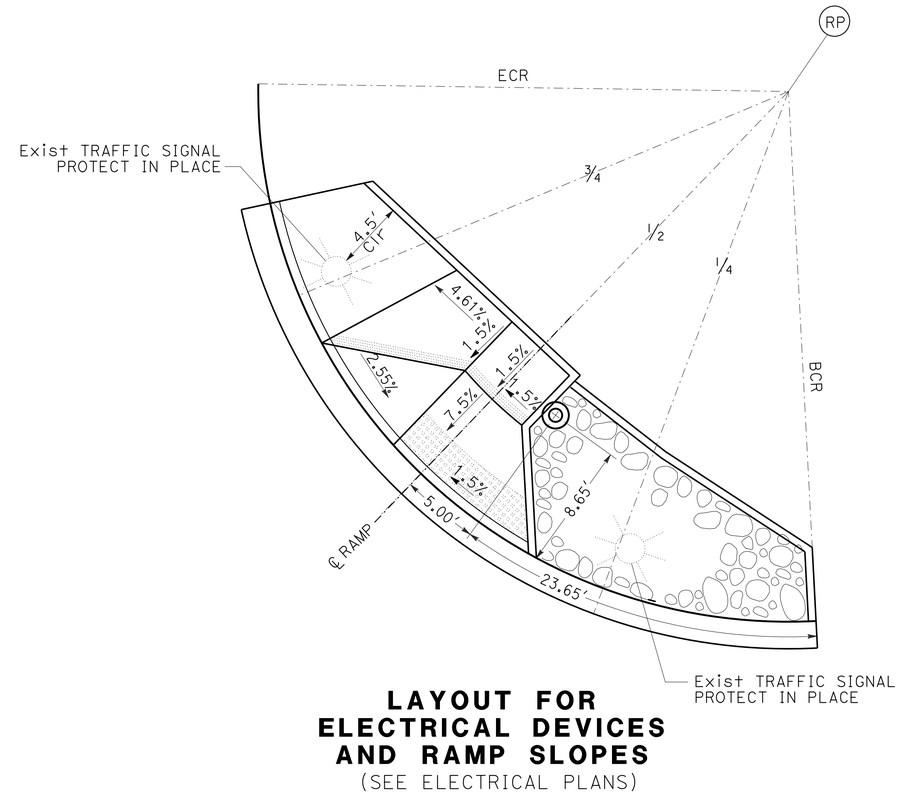

LAYOUT FOR ELECTRICAL DEVICES AND RAMP SLOPES
(SEE ELECTRICAL PLANS)

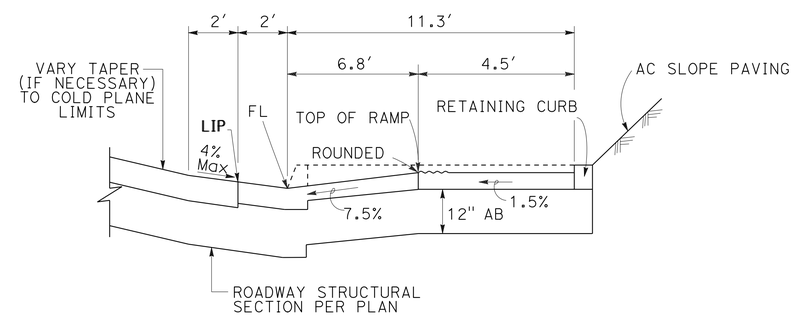

SECTION A-A

4 **REPLACED PER ADDENDUM No. 4 DATED FEBRUARY 17, 2016**

CONSTRUCTION DETAILS
LOCATION #26
CURB RAMP
CASE B MODIFIED
SCALE 1"= 5′

C-26

STATE OF CALIFORNIA - DEPARTMENT OF TRANSPORTATION
Caltrans
DESIGN
FUNCTIONAL SUPERVISOR: JUSTINE NIU
CALCULATED-DESIGNED BY: MOHAMMAD ABDRABOH
CHECKED BY: ALAN R. BISI
REVISED BY
DATE REVISED

LAST REVISION 06-26-15
DATE PLOTTED => 16-FEB-2016
TIME PLOTTED => 15:44

Dist	COUNTY	ROUTE	POST MILES TOTAL PROJECT	SHEET No.	TOTAL SHEETS
08	SBd	18	49.0/51.7	106	179

REGISTERED CIVIL ENGINEER 6-26-15 DATE

6-26-15
PLANS APPROVAL DATE

REGISTERED PROFESSIONAL ENGINEER ALAN R. BISI No. 62808 Exp. 06-30-16 CIVIL STATE OF CALIFORNIA

THE STATE OF CALIFORNIA OR ITS OFFICERS OR AGENTS SHALL NOT BE RESPONSIBLE FOR THE ACCURACY OR COMPLETENESS OF SCANNED COPIES OF THIS PLAN SHEET.

4

CONSTRUCTION STAGING GENERAL NOTES:

1. ACTIVE STAGE AND PHASE CONSTRUCTION ACTIVITIES MUST BE COMPLETE TO THE SATISFACTION OF THE ENGINEER BEFORE BEGINNING CONSTRUCTION ACTIVITIES FOR SUBSEQUENT STAGE AND PHASE.
2. BUS STOPS IMPACTED BY CONSTRUCTION ACTIVITIES SHALL BE RELOCATED IN ACCORDANCE WITH ENGINEER'S DIRECTION.
3. CONTRACTOR SHALL LIMIT WORK TO NO MORE THAN 800 LINEAR FEET AT ONE TIME DURING ANY PHASE UNLESS APPROVED BY ENGINEER. PEDESTRIAN ACCESS OR AN ALTERNATE PEDESTRIAN ROUTE MUST BE MAINTAINED AT ALL TIMES DURING CONSTRUCTION ACTIVITIES FOR SAID STAGE AND PHASE TO THE SATISFACTION OF THE ENGINEER.
4. COLD PLANE AND ROADWAY PAVING OPERATIONS SHALL COMMENCE AT LAST STAGE OF PROJECT WITH EXCEPTION OF LOCATION 30 (SEE NOTE 5 BELOW). CONTRACTOR SHALL ENSURE CURB RAMPS ARE OPERATIONAL AND ADA COMPLIANT UNTIL FINAL PAVING OPERATIONS. ALL ROADWAY CUTS ADJACENT TO THE TRAVEL WAY SHALL BE BACKFILLED PER THE SPECIAL STANDARD PROVISIONS (SSPs).
5. CONTRACTOR SHALL PERFORM ROADWAY PAVING OPERATIONS AT LOCATION #30 (STANFIELD CUTOFF) BEFORE THE CONCLUSION OF CONSTRUCTION ACTIVITIES FOR STAGE 1 (SBD-18 STATION 93+50 - 145+50). ROADWAY PAVING SHALL BE COMPLETE, IN PLACE, WITH NECESSARY PAVEMENT STRIPING AND MARKINGS TO THE SATISFACTION OF THE ENGINEER.
6. CONSTRUCTION STAGING SHALL FOLLOW THE CONCEPT PRESENTED IN THE CONTRACT PLANS UNLESS APPROVED BY THE ENGINEER. SAID STAGING REPRESENTS A COLLABORATIVE EFFORT BY CALTRANS AND UTILITY PURVEYORS TO COORDINATE CONSTRUCTION ACTIVITIES BETWEEN PARTIES. DEVIATION FROM THE SUPPLIED STAGING PLANS WILL RESULT IN OVERLAPPING CONSTRUCTION ACTIVITY BETWEEN THE RESPECTIVE CONTRACTORS AND WILL LIKELY RESULT IN DELAYS. THE STATE SHALL NOT BE HELD RESPONSIBLE FOR DELAYS RESULTING FROM UNAPPROVED DEVIATIONS FROM THE CONSTRUCTION STAGING PLAN.
7. CURB RAMP CONSTRUCTION AT LOCAL STREET INTERSECTIONS SHALL BE LIMITED TO ONE CURB RAMP AT A TIME WHERE THE LOCAL STREET WIDTH IS LESS THAN 28-FEET WIDE WITHIN 50-FEET OF THE LIMIT LINE.
8. ALL CONSTRUCTION ACTIVITY WITHIN THE VICINITY OF BIG BEAR MIDDLE SCHOOL SHALL BE SCHEDULED TO OCCUR DURING THE PERIOD OF JUNE 22, 2015 TO AUGUST 3, 2015 (SUMMER RECESS). THE AREA SUBJECT TO THIS RESTRICTION SPANS FROM MOUNTAINAIRE LANE TO EUREKA DRIVE (SBD-18 STA +/- 36+00 TO +/-51+00). THESE DATES ARE PRELIMINARY AND CONTRACTOR SHALL DETERMINE CURRENT SCHOOL SCHEDULES WITH THE BEAR VALLEY UNIFIED SCHOOL DISTRICT PRIOR TO CONSTRUCTION.
9. DRIVEWAY CONSTRUCTION SHALL OCCUR DURING NON-BUSINESS HOURS WITHOUT APPROVAL FROM ENGINEER. SHOULD APPROVAL BE GRANTED, VEHICULAR ACCESS SHALL BE MAINTAINED DURING THE DURATION OF CONSTRUCTION ACTIVITY FOR SAID DRIVEWAY TO THE SATISFACTION OF THE ENGINEER. BUSINESSES SHALL BE NOTIFIED OF TYPE OF WORK AND EXPECTED DURATION BY ENGINEER AT LEAST 10-DAYS IN ADVANCE OF DRIVEWAY CONSTRUCTION ACTIVITIES.

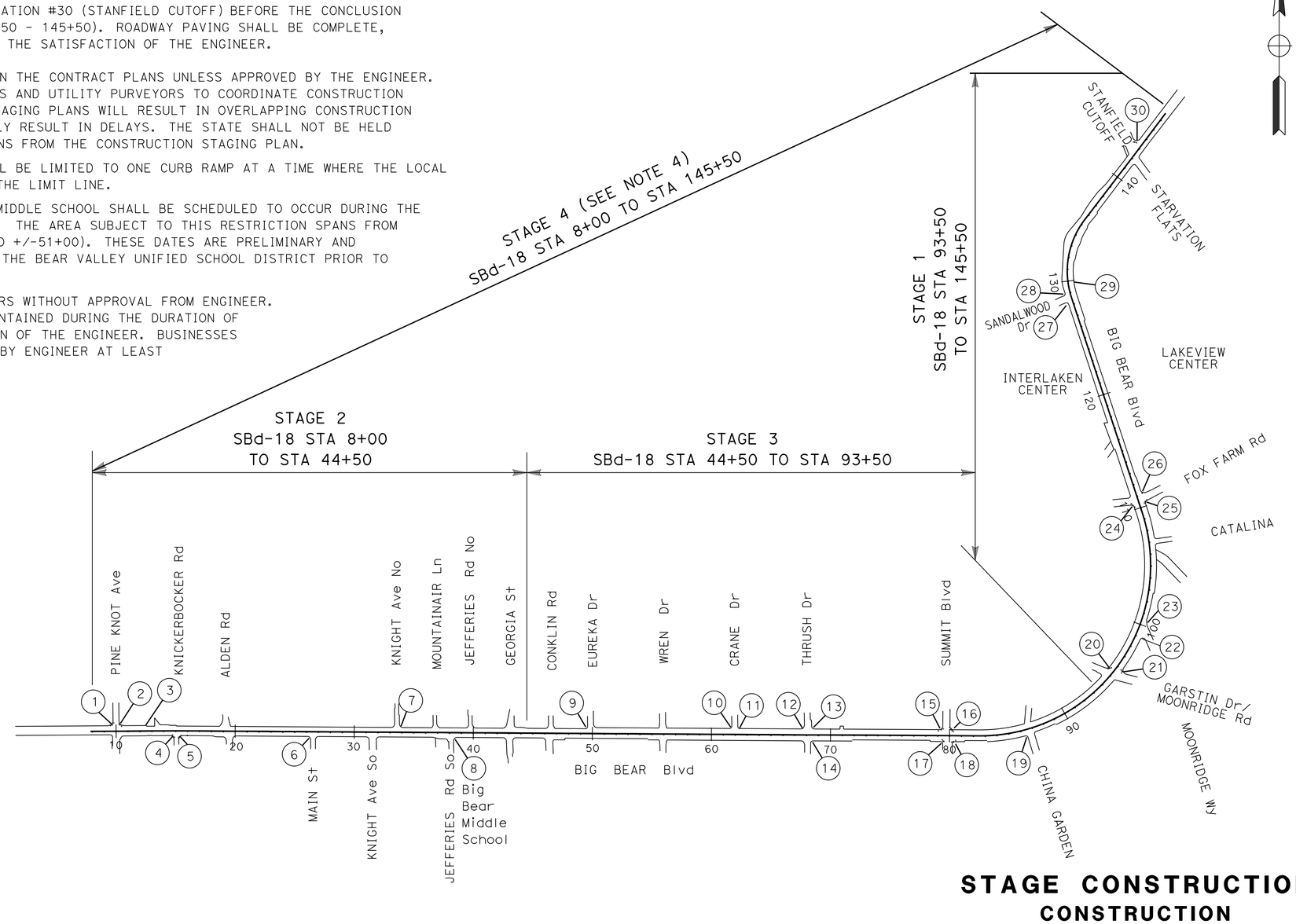

4 **REPLACED PER ADDENDUM No. 4 DATED FEBRUARY 17, 2016**

STAGE CONSTRUCTION
CONSTRUCTION STAGING OVERVIEW
NO SCALE

SC-1

STATE OF CALIFORNIA - DEPARTMENT OF TRANSPORTATION
Caltrans® DESIGN
FUNCTIONAL SUPERVISOR: JUSTINE NIU
CALCULATED-DESIGNED BY: MOHAMMAD ABDRABOH
CHECKED BY: ALAN R. BISI
REVISED BY / DATE REVISED

LAST REVISION 06-26-15 | DATE PLOTTED => 16-FEB-2016 | TIME PLOTTED => 15:44

Dist	COUNTY	ROUTE	POST MILES TOTAL PROJECT	SHEET No.	TOTAL SHEETS
08	SBd	18	49.0/51.7	107	179

4

REGISTERED CIVIL ENGINEER 6-26-15 DATE

6-26-15
PLANS APPROVAL DATE

REGISTERED PROFESSIONAL ENGINEER
DEAN D TO
No. 81698
Exp. 03-31-16
CIVIL
STATE OF CALIFORNIA

THE STATE OF CALIFORNIA OR ITS OFFICERS OR AGENTS SHALL NOT BE RESPONSIBLE FOR THE ACCURACY OR COMPLETENESS OF SCANNED COPIES OF THIS PLAN SHEET.

NOTE:

1- REFER TO STANDARD PLAN T11 AND T13 FOR TRAFFIC CONTROL DURING CONSTRUCTION
2- DELINATOR (PORTABLE) SHOW ONLY FOR NON-WORKING HOURS
3- ONLY ONE CURB RAMP SHALL BE CONSTRUCTED AT A TIME
4- ONLY SIDEWALK ON ONE SIDE OF THE ROAD SHALL BE CONSTRUCTED AT A TIME
5- DRIVEWAY ACCESS SHALL BE PROVIDED AT ALL TIMES DURING THE AFFECTED BUSSINESS ' NORMAL OPERATING HOURS
6- DRIVEWAY CONSTRUCTION SHALL OCCUR DURING NON-BUSINESS HOURS UNLESS APPROVED BY ENGINEER

LEGEND:

WORK AREA

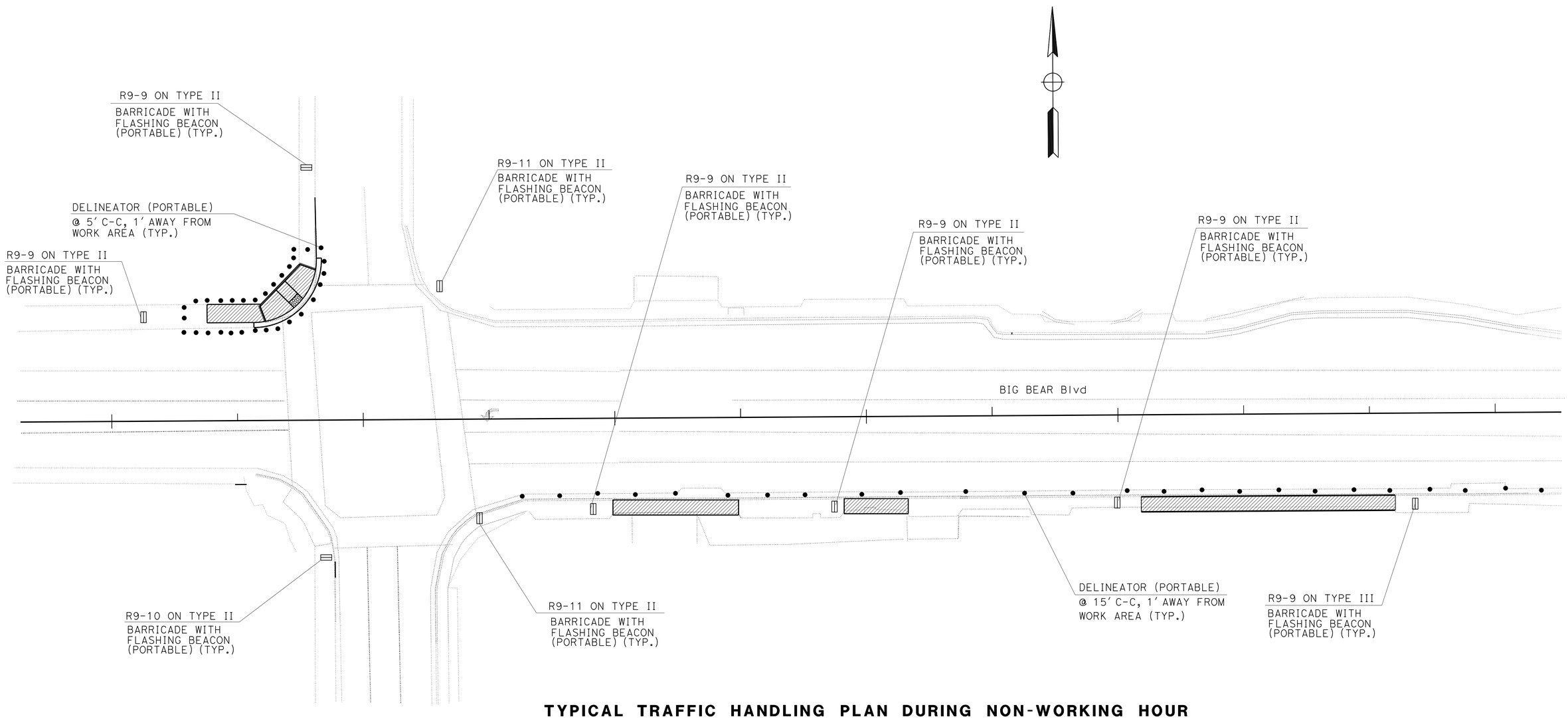

TYPICAL TRAFFIC HANDLING PLAN DURING NON-WORKING HOUR

4 **REPLACED PER ADDENDUM No. 4 DATED FEBRUARY 17, 2016**

APPROVED FOR TRAFFIC HANDLING WORK ONLY

TRAFFIC HANDLING PLAN
SCALE 1"=20'
TH-1

STATE OF CALIFORNIA - DEPARTMENT OF TRANSPORTATION
Caltrans
TRAFFIC DESIGN

FUNCTIONAL SUPERVISOR: MARIO AMANCIO
CALCULATED-DESIGNED BY: DEAN TO
CHECKED BY: TRAN HOANG
REVISED BY
DATE REVISED

LAST REVISION 06-26-15
DATE PLOTTED => 16-FEB-2016
TIME PLOTTED => 15:44

Dist	COUNTY	ROUTE	POST MILES TOTAL PROJECT	SHEET No.	TOTAL SHEETS
08	SBd	18	49.0/51.7	108	179

REGISTERED CIVIL ENGINEER DATE 6-26-15

PLANS APPROVAL DATE 6-26-15

REGISTERED PROFESSIONAL ENGINEER DEAN D TO No. C81698 Exp. 3-31-16 CIVIL STATE OF CALIFORNIA

THE STATE OF CALIFORNIA OR ITS OFFICERS OR AGENTS SHALL NOT BE RESPONSIBLE FOR THE ACCURACY OR COMPLETENESS OF SCANNED COPIES OF THIS PLAN SHEET.

4

CONSTRUCTION AREA SIGNS

SIGN CODE (N)	PANEL SIZE	SIGN MESSAGE	MOUNTED ON TYPE II BARRICADE (EA) (N)
R9-9	24" x 12"	SIDEWALK CLOSED	40
R9-10	24" x 12"	SIDEWALK CLOSED USE OTHER SIDE	5
R9-11	24" x 12"	SIDEWALK CLOSED AHEAD CROSS HERE	5

(N) - NOT A SEPARATE PAY ITEM, FOR INFORMATION ONLY

TRAFFIC ITEM

TYPE II BARRICADE	PORTABLE DELINEATOR	FLASHING BEACON (PORTABLE)
(EA)	(EA)	(EA)
50	170	50

4 REPLACED PER ADDENDUM No. 4 DATED FEBRUARY 17, 2016

TRAFFIC HANDLING QUANTITIES
THQ-1

STATE OF CALIFORNIA - DEPARTMENT OF TRANSPORTATION
Caltrans TRAFFIC DESIGN

FUNCTIONAL SUPERVISOR: MARIO AMANCIO
CALCULATED-DESIGNED BY: DEAN TO
CHECKED BY: TRAN HOANG
REVISED BY
DATE REVISED

LAST REVISION 06-26-15 | DATE PLOTTED => 16-FEB-2016 | TIME PLOTTED => 15:44

Dist	COUNTY	ROUTE	POST MILES TOTAL PROJECT	SHEET No.	TOTAL SHEETS
08	SBd	18	49.0/51.7	111	171

4

Dean D To 6-26-15
REGISTERED CIVIL ENGINEER DATE

6-26-15
PLANS APPROVAL DATE

REGISTERED PROFESSIONAL ENGINEER
DEAN D TO
No. 81698
Exp. 03-31-16
CIVIL
STATE OF CALIFORNIA

THE STATE OF CALIFORNIA OR ITS OFFICERS OR AGENTS SHALL NOT BE RESPONSIBLE FOR THE ACCURACY OR COMPLETENESS OF SCANNED COPIES OF THIS PLAN SHEET.

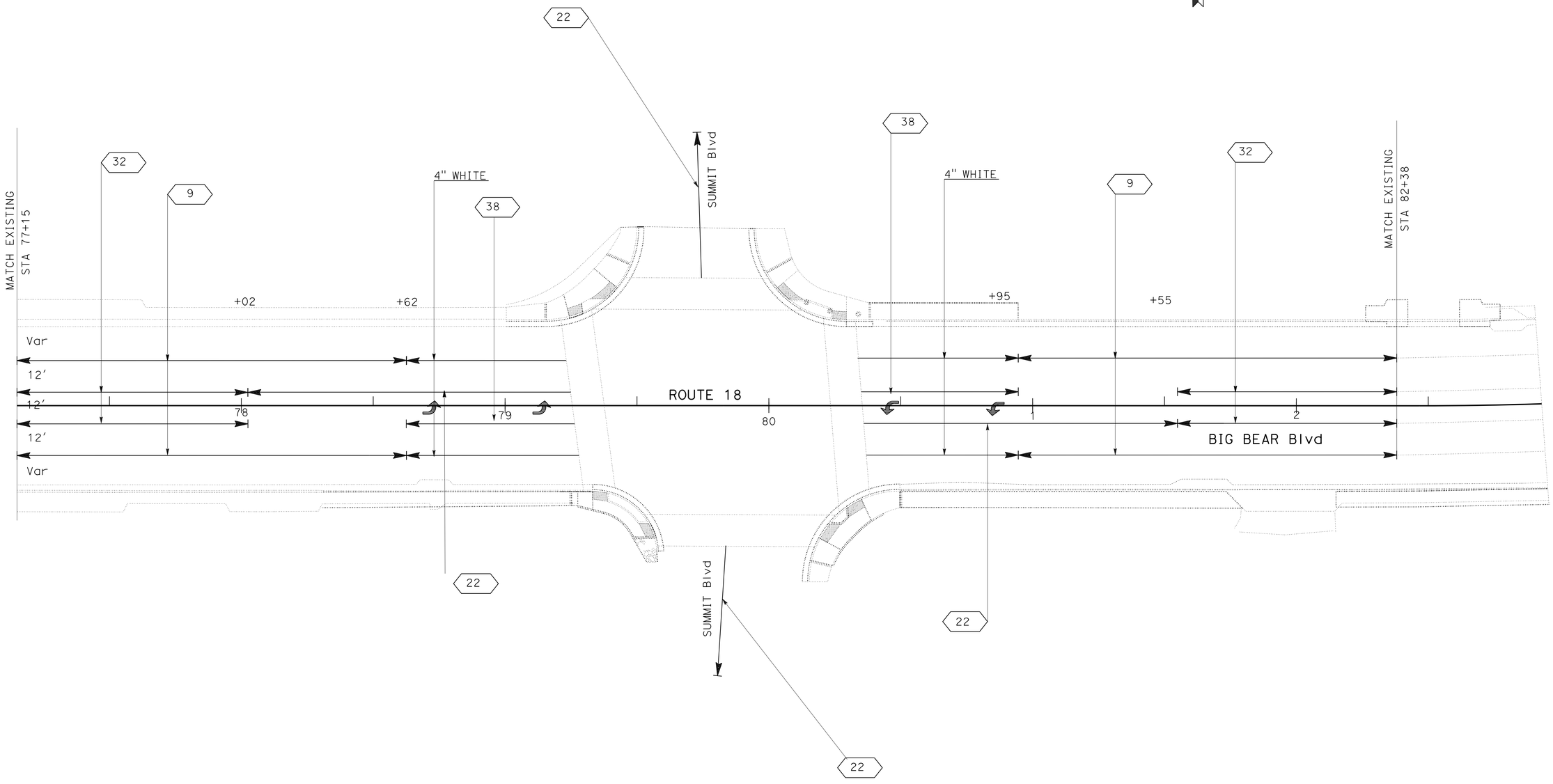

4 **REPLACED PER ADDENDUM No. 4 DATED FEBRUARY 17, 2016**

APPROVED FOR PAVEMENT DELINEATION WORK ONLY

PAVEMENT DELINEATION PLAN

SCALE 1"=20'

PD-3

STATE OF CALIFORNIA - DEPARTMENT OF TRANSPORTATION
Caltrans® **TRAFFIC DESIGN**

FUNCTIONAL SUPERVISOR: MARIO AMANCIO

CALCULATED-DESIGNED BY: DEAN TO
CHECKED BY: TRAN HOANG

REVISED BY | DATE REVISED

LAST REVISION 09-08-15 | DATE PLOTTED => 16-FEB-2016 | TIME PLOTTED => 15:44

Dist	COUNTY	ROUTE	POST MILES TOTAL PROJECT	SHEET No.	TOTAL SHEETS
08	SBd	18	49.0/51.7	119	179

REGISTERED CIVIL ENGINEER 6-26-15 DATE

6-26-15
PLANS APPROVAL DATE

REGISTERED PROFESSIONAL ENGINEER ALAN R. BISI No. 62808 Exp. 06-30-16 CIVIL STATE OF CALIFORNIA

THE STATE OF CALIFORNIA OR ITS OFFICERS OR AGENTS SHALL NOT BE RESPONSIBLE FOR THE ACCURACY OR COMPLETENESS OF SCANNED COPIES OF THIS PLAN SHEET.

4

ROADWAY QUANTITIES

QUADRANT	LOCATION	No.	HOT MIX ASPHALT (TYPE A)	PLACE HMA (Misc AREA)	MINOR HOT MIX ASPHALT	CLASS 2 AGGREGATE BASE	LIQUID ASPHALT (PRIME COAT)	PAINT BINDER (TACK COAT)	COLD PLANE ASPHALT CONCRETE PAVEMENT (0.25' MINIMUM)	ROADWAY EXCAVATION	MINOR CONCRETE (CURB, SIDEWALK, AND CURB RAMP)	JOINTED PLAIN Conc PAVEMENT (RSC)	PRE/POST CONSTRUCTION SURVEY	REMOVE CONCRETE (MISCELLANEOUS)	REMOVE SLOPE PAVING	DETECTABLE WARNING SURFACE
			TON	SQYD	TON	CY	TON	TON	SQYD	CY	CY	CY	EA	CY	SQYD	SQFT
NW	PINE KNOT Ave	1	32.98			17.87	0.19	0.09	157.38	22.08	9.20		1	6.88		12.35
NE	PINE KNOT Ave	2	31.80			17.76	0.18	0.09	157.38	21.54	8.30		1	7.20		15.65
N	SIDEWALK	3	0.00			10.48	0.01	0.01		12.44	4.22			4.05		
SW	KNICKERBOCKER Rd	4	22.60			17.26	0.12	0.06	89.64	21.63	7.08		1	5.55		12.40
SE	KNICKERBOCKER Rd	5	27.92			16.39	0.16	0.07	134.47	19.94	6.91		1	6.46		12.40
SW	MAIN St	6	1.76			0.98	4.90	0.01		1.55	1.34			1.24		
NE	KNIGHT Ave No	7	21.07			17.09	0.12	0.05	98.02	20.56	6.56		1	6.07		11.90
SE	JEFFERIES Rd So	8	26.96			16.02	0.15	0.07	128.39	19.51	6.80		1	6.95		15.78
NW	EUREKA Dr	9	19.31			10.90	0.11	0.05	94.48	13.21	4.29		1	3.95		12.12
NW	CRANE Dr	10	32.81	2.11	0.35	12.26	0.19	0.08	161.93	15.28	7.94		1	7.40	4.22	31.83
NE	CRANE Dr	11	22.06			15.73	0.13	0.06	107.96	18.90	6.47		1	4.88		36.05
NW	THRUSH Dr	12	33.30			12.74	0.20	0.10	165.55	15.96	5.65		1	8.82		30.88
NE	THRUSH Dr	13	39.95			12.40	0.20	0.10	165.55	15.77	7.89		1	8.39		32.07
SE	THRUSH Dr	14	29.78			11.84	0.17	0.08	135.47	15.21	6.18		1	5.88		28.16
NW	SUMMIT Blvd	15	48.72	14.61	2.43	28.24	0.26	0.15	206.24	36.27	12.78		1	8.74	23.39	42.70
NE	SUMMIT Blvd	16	33.29			22.94	0.18	0.08	154.16	27.46	11.75		1	6.16		39.69
SW	SUMMIT Blvd	17	27.07	1.27	0.21	14.40	0.20	0.09	157.38	19.36	8.18		1	4.97	6.33	16.78
SE	SUMMIT Blvd	18	45.71			20.64	0.21	0.10	188.43	24.80	11.08		1	7.62		22.13
SW	CHINA GARDEN	19	27.31			11.76	0.16	0.07	140.19	14.11	5.84		1	5.79		26.40
NW	GARSTIN/MOONRIDGE Rd	20	30.02			17.89	0.15	0.08	114.92	23.47	6.63		1	5.70		39.91
NE	GARSTIN/MOONRIDGE Rd	21	42.24			33.34	0.24	0.11	206.46	39.87	14.96		1	8.72		34.55
SE	MOONRIDGE Wy	22	89.57			39.00	0.46	0.20	401.06	41.60	9.55		1	7.31		12.40
NE	MOONRIDGE Wy	23	25.64			29.14	0.24	0.11	215.96	30.85	8.78		1	9.41		15.51
NE	FOX FARM Rd	26	29.56	1.11	0.19	22.43	0.21	0.09	185.63	23.56	6.96		1	6.61	6.67	23.42
SE	FOX FARM Rd	25	42.97			30.84	0.21	0.09	185.63	32.67	7.59		1	7.88		12.36
SW	FOX FARM Rd	24	35.26			39.12	0.20	0.09	179.26	42.11	12.25		1	8.31		13.86
SW	SANDALWOOD Dr	27	29.04			20.00	0.17	0.08	143.62	20.53	4.86		1	5.65		24.21
NW	SANDALWOOD Dr	28	28.82			30.61	0.17	0.08	143.62	32.80	6.69		1	6.65		13.04
E	SIDEWALK	29	0.00			4.51				5.17	1.13			1.10		
NW	STANFIELD CUTOFF	30	26.77			48.23	0.15	0.10	73.07	51.95	4.38			1.50		18.10
ROADWAY SUB TOTAL			904.29	19.10	3.18	602.81	5.14	2.44	4291.85	700.16	222.24		26	185.84	40.61	586.65
SIDEWALK, DRIVEWAY SUB TOTAL*			0.00	0.00		1561.70				1561.70	481.40	65.20		425.40		
GRAND TOTAL			904.29	19.10	3.18	2164.51	5.14	2.44	4291.85	2261.86	703.64	65.20	26	611.24	40.61	586.65

* FOR SIDEWALK AND DRIVEWAY QUANTITIES, SEE Q-2,3,AND 4

ADJUST MONUMENT TO GRADE

LOCATION *	EA
SBd-18 PM 49.0-51.7	15
TOTAL	15

* EXACT LOCATION SHALL BE DETERMINED BY THE ENGINEER

ROCK BLANKET

LOCATION	No.	QUADRANT	ROCK BLANKET
			SQYD
CRANE Dr	10	NW	11.71
CRANE Dr	11	NE	5.12
THRUSH Dr	12	NW	34.09
THRUSH Dr	13	NE	27.29
THRUSH Dr	14	SE	13.35
SUMMIT Blvd	17	SW	3.38
FOX FARM Rd	26	NE	18.68
SANDALWOOD Dr	27	SW	18.94
TOTAL			132.56

WARNING RAIL

LOCATION	No.	QUADRANT	WARNING RAIL
			LF
KNICKERBOCKER Rd	5	SE	24.0
CRANE Dr	10	NW	15.5
Rt Sta 17+27 TO Rt Sta 17+32		PARKWAY	5.0
Rt Sta 20+56 TO Rt Sta 20+61		PARKWAY	5.0
Rt Sta 21+40 TO Rt Sta 21+45		PARKWAY	5.0
Rt Sta 34+86 TO Rt Sta 34+91		PARKWAY	5.0
Rt Sta 90+54 TO Rt Sta 90+59		PARKWAY	5.0
Rt Sta 93+71 TO Rt Sta 93+76		PARKWAY	5.0
TOTAL			69.5

4 **REPLACED PER ADDENDUM No. 4 DATED FEBRUARY 17, 2016**

SUMMARY OF QUANTITIES
Q-1

STATE OF CALIFORNIA - DEPARTMENT OF TRANSPORTATION
Caltrans DESIGN
FUNCTIONAL SUPERVISOR JUSTINE NIU
CALCULATED-DESIGNED BY ALAN BISI
CHECKED BY ANNABELL WANG
REVISED BY
DATE REVISED

LAST REVISION 06-26-15
DATE PLOTTED => 16-FEB-2016
TIME PLOTTED => 15:44

Dist	COUNTY	ROUTE	POST MILES TOTAL PROJECT	SHEET No.	TOTAL SHEETS
08	SBd	18	49.0/51.7	120	179

REGISTERED CIVIL ENGINEER 6-26-15 DATE

6-26-15
PLANS APPROVAL DATE

REGISTERED PROFESSIONAL ENGINEER ALAN R. BISI No. 62808 Exp. 06-30-16 CIVIL STATE OF CALIFORNIA

THE STATE OF CALIFORNIA OR ITS OFFICERS OR AGENTS SHALL NOT BE RESPONSIBLE FOR THE ACCURACY OR COMPLETENESS OF SCANNED COPIES OF THIS PLAN SHEET.

4

SIDEWALK AND DRIVEWAY QUANTITIES

(TABLE 1 OF 5)

DIRECTION		LOCATION SBd-18 STATION "BB1"		SIDEWALK			DRIVE-WAY	REMOVE CONC (Misc)
				MINOR Conc (CURB, SIDEWALK & CURB RAMP)	CLASS 2 AB	ROADWAY Ex	JOINTED PLAIN Conc PAVEMENT (RSC)	
LT	RT	FROM	TO	CY	CY	CY	CY	CY
X		10+53.00	11+04.00	3.4	11.3	11.3		2.4
X		11+43.00	11+83.00	2.6	8.8	8.8		2.0
	X	11+91.00	12+17.00	1.7	5.7	5.7		1.3
X		11+95.00					1.0	1.0
X		12+29.00	12+58.00	1.9	6.4	6.4		1.5
	X	12+36.00	12+65.00	1.9	6.4	6.4		1.5
X		12+63.00					0.8	0.8
	X	13+09.00	14+10.00	6.7	22.4	22.4		4.6
X		13+25.00	13+81.00	3.7	12.3	12.3		2.7
	X	14+10.00	14+45.00	2.3	7.8	7.8		1.8
X		14+16.00	14+69.00	3.6	11.9	11.9		2.7
	X	14+25.00					3.6	3.6
	X	15+63.00					2.6	2.6
	X	15+76.00	16+24.00	3.2	10.7	10.7		2.3
	X	15+76.00	16+24.00	0.8				
X		16+16.00	16+93.00	5.2	17.2	17.2		3.8
	X	16+35.00					3.2	3.2
	X	16+47.00	16+57.00	0.8	2.7	2.7		0.6
X		17+14.00	17+49.00	2.3	7.8	7.8		1.7
	X	17+25.00	18+98.00	11.5	38.3	38.3		8.6
	X	17+32.00	17+62.00	0.5				
X		17+62.00					1.8	1.8
X		18+44.00	18+79.00	2.1	6.6	6.6		1.6
X		18+90.00					2.2	2.2
X		19+50.00	20+02.00	3.4	11.4	11.4		2.6
	X	20+46.00	21+23.00	5.1	17.0	17.0		3.8
X		20+84.00	21+64.00	5.3	17.8	17.8		4.0
	X	21+39.50	21+58.00	1.2	4.1	4.1		0.9
	X	21+82.00	21+99.00	1.1	3.8	3.8		0.9
X		21+94.50	22+56.00	4.1	13.7	13.7		3.1
	X	22+10.50	22+19.00	0.6	1.9	1.9		0.4
	X	22+34.00	22+70.50	2.4	8.1	8.1		1.8
	X	22+85.00	23+08.50	1.6	5.2	5.2		1.1
X		23+05.50	23+45.50	2.7	8.9	8.9		2.0
	X	23+24.50	23+60.00	2.4	7.9	7.9		1.7
	X	23+75.00	24+12.50	2.5	8.3	8.3		1.8
	X	24+28.00	24+68.00	2.7	8.9	8.9		1.9
X		24+86.00	25+26.00	2.7	8.9	8.9		2.0
	X	25+03.00	25+77.00	4.9	16.4	16.4		3.7
	X	25+95.00	26+00.00	0.3	1.1	1.1		0.3
X		26+05.50	26+71.00	4.4	14.6	14.6		3.3
	X	26+99.00	27+03.00	0.3	0.9	0.9		0.2
	X	27+18.00	27+46.00	1.9	6.2	6.2		1.4
			SUB TOTAL	103.80	341.40	341.40	15.20	91.20

(TABLE 2 OF 5)

DIRECTION		LOCATION SBd-18 STATION "BB1"		SIDEWALK			DRIVE-WAY	REMOVE CONC (Misc)
				MINOR Conc (CURB, SIDEWALK & CURB RAMP)	CLASS 2 AB	ROADWAY Ex	JOINTED PLAIN Conc PAVEMENT (RSC)	
LT	RT	FROM	TO	CY	CY	CY	CY	CY
X		27+35.00	27+47.00	0.8	2.7	2.7		0.6
X		27+70.00	28+11.50	2.8	9.2	9.2		2.0
	X	28+00.00					1.6	1.6
X		28+66.00	28+96.00	2.0	6.7	6.7		1.5
X		29+69.00	29+96.00	1.8	6.0	6.0		1.3
X		30+21.00	30+89.00	4.5	15.1	15.1		3.2
X		31+69.00	32+08.50	2.6	8.8	8.8		1.9
X		32+37.50	33+11.50	4.9	16.4	16.4		3.7
X		32+50.00	33+12.00	1.0				
	X	32+86.00	33+20.00	2.3	7.6	7.6		1.7
	X	33+55.50	34+11.00	3.7	12.3	12.3		2.8
X		33+98.00	34+73.00	5.0	16.7	16.7		4.4
X		34+00.00	34+73.00	1.1				
	X	34+80.00	35+49.00	4.6	15.3	15.3		3.4
	X	35+75.50	36+00.00	1.6	5.4	5.4		1.2
X		35+99.00	36+25.00	1.7	5.8	5.8		1.5
	X	36+44.00	36+66.00	0.3				
	X	36+44.00	37+00.00	3.7	12.4	12.4		3.1
X		37+23.00	37+81.00	3.9	12.9	12.9		2.9
X		37+94.50	38+65.00	3.4	11.3	11.3		3.5
	X	38+62.50	39+78.00	6.7	22.4	22.4		6.7
X		39+12.00	39+38.00	1.7	5.8	5.8		1.3
	X	39+98.00					5.3	5.3
X		40+20.00	41+57.50	9.2	30.6	30.6		6.7
	X	40+19.00	42+51.50	13.7	45.6	45.6		14.5
	X	44+46.00					1.2	1.2
	X	44+62.00	44+91.50	2.0	6.6	6.6		1.5
	X	45+05.00					3.7	3.7
X		45+17.00	45+37.00	1.3	4.4	4.4		1.0
	X	45+19.00	45+85.00	4.4	14.7	14.7		3.2
	X	45+19.00	45+85.00	1.0				
X		45+72.00	46+02.00	2.0	6.7	6.7		1.4
X		46+95.00	47+13.00	1.2	4.0	4.0		1.0
X		47+69.50	48+14.00	3.0	9.9	9.9		2.1
	X	49+00.00	49+38.00	2.3	7.7	7.7		2.3
	X	49+52.00					1.5	1.5
	X	49+63.50	50+61.50	5.9	19.6	19.6		5.9
X		51+61.00	51+97.50	2.4	8.1	8.1		1.8
X		53+20.00	53+60.00	2.7	8.9	8.9		2.0
			SUB TOTAL	111.20	359.60	359.60	13.30	103.40
			SHEET TOTAL	215.00	701.00	701.00	28.50	194.60

4 **REPLACED PER ADDENDUM No. 4 DATED FEBRUARY 17, 2016**

SUMMARY OF QUANTITIES
Q-2

STATE OF CALIFORNIA - DEPARTMENT OF TRANSPORTATION
DESIGN

REVISED BY | DATE REVISED
ALAN BISI | ANNABELL WANG
CALCULATED-DESIGNED BY | CHECKED BY
FUNCTIONAL SUPERVISOR: JUSTINE NIU

LAST REVISION 06-26-15
DATE PLOTTED => 16-FEB-2016
TIME PLOTTED => 15:44

SIDEWALK AND DRIVEWAY QUANTITIES

(TABLE 3 OF 5)

DIRECTION		LOCATION SBd-18 STATION "BB1"		SIDEWALK			DRIVE-WAY	REMOVE Conc (Misc)
				MINOR Conc (CURB, SIDEWALK & CURB RAMP)	CLASS 2 AB	ROADWAY Ex	JOINTED PLAIN Conc PAVEMENT (RSC)	
LT	RT	FROM	TO	CY	CY	CY	CY	CY
	X	53+20.50	53+32.50	0.8	2.7	2.7		0.7
	X	53+94.50	54+09.50	1.0	3.3	3.3		0.8
X		54+50.00	54+65.50	1.0	3.3	3.3		0.7
	X	54+70.50	55+11.00	2.7	9.0	9.0		1.9
	X	55+30.50	55+39.50	0.6	2.0	2.0		0.5
X		56+41.00	56+64.00	1.5	5.1	5.1		1.1
X		56+90.00	57+19.00	1.9	6.4	6.4		1.6
X		57+36.00					3.3	3.3
X		57+45.00	57+75.00	2.0	6.7	6.7		1.5
	X	57+89.00	58+20.00	2.1	6.9	6.9		1.5
X		59+19.00	59+60.50	2.8	9.2	9.2		2.0
X		60+76.00	60+99.50	1.6	5.2	5.2		1.1
	X	61+09.50	61+78.50	4.6	15.3	15.3		3.3
X		61+26.00	61+41.00	1.0	3.2	3.2		0.7
X		62+46.00	62+66.00	1.3	4.4	4.4		1.0
X		63+86.00	64+14.00	1.8	6.1	6.1		1.3
	X	64+15.00	64+60.00	3.0	10.0	10.0		2.2
X		65+74.50	65+98.50	1.6	5.3	5.3		1.2
X		66+36.00	66+93.00	3.8	12.7	12.7		2.9
X		67+39.00	67+53.00	1.0	3.2	3.2		0.7
	X	68+54.00	69+40.00	5.7	19.1	19.1		4.3
X		68+62.00	68+77.00	1.0	3.3	3.3		0.8
X		69+18.00	69+50.00	2.1	7.1	7.1		1.5
X		70+61.50	71+39.50	5.2	17.3	17.3		3.7
	X	70+78.00	72+59.00	12.1	40.2	40.2		9.1
	X	71+83.00	72+59.00	1.2				
X		73+34.50	74+50.00	7.7	25.7	25.7		5.4
	X	74+80.00	75+05.00	0.4				
	X	74+80.00	75+07.00	1.8	6.1	6.1		1.4
X		74+94.00	75+03.00	0.6	2.0	2.0		0.4
	X	75+34.00	75+72.00	2.5	8.4	8.4		1.8
	X	75+34.00	75+72.00	0.6				
	X	75+88.00	76+20.00	2.1	7.0	7.0		1.5
	X	75+88.00	76+20.00	0.5				
	X	76+31.00	76+61.00	2.0	6.7	6.7		1.5
	X	76+31.00	76+61.00	0.5				
X		76+56.50	77+30.00	4.9	16.3	16.3		3.5
	X	76+90.00	77+20.00	2.0	6.8	6.8		1.5
	X	76+90.00	77+20.00	0.5				
	X	77+56.00	77+95.00	2.6	8.8	8.8		1.9
	X	77+56.00	77+95.00	0.6				
			SUB TOTAL	92.70	294.80	294.80	3.30	68.30

(TABLE 4 OF 5)

DIRECTION		LOCATION SBd-18 STATION "BB1"		SIDEWALK			DRIVE-WAY	REMOVE CONC (Misc)
				MINOR Conc (CURB, SIDEWALK & CURB RAMP)	CLASS 2 AB	ROADWAY Ex	JOINTED PLAIN Conc PAVEMENT (RSC)	
LT	RT	FROM	TO	CY	CY	CY	CY	CY
	X	78+31.00	79+33.00	6.8	22.8	22.8		5.1
	X	78+31.00	79+38.00	0.1				
	X	79+28.00	79+52.00	0.4				
X		80+30.00	80+94.50	4.3	14.3	14.3		3.2
	X	80+48.00	80+79.00	8.7	29.1	29.1		6.3
	X	82+15.00	82+45.00	2.0	6.7	6.7		1.4
X		82+50.00					2.7	2.7
	X	82+69.00					5.1	5.1
	X	82+85.00	83+50.00	4.3	14.4	14.4		3.1
	X	83+63.00					12.7	12.7
X		83+65.00					2.7	2.7
X		83+82.00	84+09.00	1.8	6.0	6.0		1.3
X		85+62.00	86+07.00	3.0	10.0	10.0		2.2
X		86+35.00					2.0	2.0
X		86+44.00	86+87.00	2.9	9.6	9.6		2.1
X		88+69.00	89+06.50	2.5	8.4	8.4		1.7
	X	88+81.50	89+00.00	1.2	4.1	4.1		0.9
	X	89+56.50	90+11.50	3.7	12.2	12.2		2.9
X		90+13.50	90+52.50	2.6	8.7	8.7		1.9
	X	90+46.50	91+24.00	5.2	17.2	17.2		3.9
X		91+21.50	91+53.50	2.1	7.1	7.1		1.6
	X	91+45.50	92+68.00	8.2	27.2	27.2		6.1
X		92+15.00	92+77.00	4.2	13.9	13.9		3.0
	X	92+88.00	92+98.50	0.7	2.3	2.3		0.5
X		93+01.00	93+10.50	0.6	2.1	2.1		0.5
	X	93+28.00	93+99.00	4.7	15.8	15.8		3.6
X		93+45.00	93+88.00	2.8	9.4	9.4		2.4
	X	94+42.50	94+74.00	2.1	7.0	7.0		1.5
X		96+61.00	96+80.00	1.3	4.2	4.2		0.9
X		96+93.00					1.8	1.8
X		98+24.00	98+37.00	0.9	3.0	3.0		0.7
X		98+74.50	99+20.00	3.0	10.1	10.1		2.2
X		100+58.00	100+68.00	0.7	2.2	2.2		0.5
X		100+81.00					0.9	0.9
X		101+74.00	101+88.00	0.9	3.1	3.1		0.6
X		102+16.00	102+28.00	0.8	2.7	2.7		0.6
X		102+92.00	103+02.00	0.7	2.2	2.2		0.5
	X	103+00.00	103+79.00	5.3	17.6	17.6		4.0
X		103+23.50	103+33.00	0.6	2.1	2.1		0.4
	X	103+98.00					5.5	5.5
	X	104+17.00	104+27.00	0.7	2.2	2.2		0.5
			SUB TOTAL	89.80	297.70	297.70	33.40	99.50
			SHEET TOTAL	182.50	592.50	592.50	36.70	167.80

4

Dist	COUNTY	ROUTE	POST MILES TOTAL PROJECT	SHEET No.	TOTAL SHEETS
08	SBd	18	49.0/51.7	121	179

REGISTERED CIVIL ENGINEER 6-26-15 DATE

6-26-15
PLANS APPROVAL DATE

REGISTERED PROFESSIONAL ENGINEER ALAN R. BISI No. 62808 Exp. 06-30-16 CIVIL STATE OF CALIFORNIA

THE STATE OF CALIFORNIA OR ITS OFFICERS OR AGENTS SHALL NOT BE RESPONSIBLE FOR THE ACCURACY OR COMPLETENESS OF SCANNED COPIES OF THIS PLAN SHEET.

ADJUST PULL BOX QUANTITY*

DIRECTION		LOCATION SBd-18 STATION "BB1"	ADJUST PULL BOX
LT	RT		EA
	X	14+10.00	1
	X	27+40.00	1
X		27+75.00	1
X		28+40.00	1
X		32+45.00	1
X		34+75.00	1
	X	40+90.00	1
	X	41+80.00	1
X		49+50.00	1
X		61+40.00	1
X		62+40.00	1
X		67+50.00	1
X		68+70.00	1
X		73+50.00	1
X		77+00.00	1
	X	78+60.00	1
X		85+60.00	1
X		88+60.00	1
	X	92+95.00	1
X		93+50.00	1
X		102+25.00	1
X		104+30.00	1
X		108+25.00	1
X		128+00.00	1
	X	138+50.00	1
		TOTAL	25

* SEE ELECTRICAL PLANS FOR PULL BOX REPLACEMENT LOCATIONS

4 **REPLACED PER ADDENDUM No. 4 DATED FEBRUARY 17, 2016**

SUMMARY OF QUANTITIES
Q-3

STATE OF CALIFORNIA - DEPARTMENT OF TRANSPORTATION
Caltrans DESIGN
FUNCTIONAL SUPERVISOR: JUSTINE NIU
CALCULATED-DESIGNED BY: ALAN BISI
CHECKED BY: ANNABELL WANG
REVISED BY / DATE REVISED

LAST REVISION 06-26-15 | DATE PLOTTED => 16-FEB-2016 | TIME PLOTTED => 15:44

Dist	COUNTY	ROUTE	POST MILES TOTAL PROJECT	SHEET No.	TOTAL SHEETS
08	SBd	18	49.0/51.7	122	179

REGISTERED CIVIL ENGINEER 6-26-15 DATE

6-26-15
PLANS APPROVAL DATE

REGISTERED PROFESSIONAL ENGINEER ALAN R. BISI No. 62808 Exp. 06-30-16 CIVIL STATE OF CALIFORNIA

THE STATE OF CALIFORNIA OR ITS OFFICERS OR AGENTS SHALL NOT BE RESPONSIBLE FOR THE ACCURACY OR COMPLETENESS OF SCANNED COPIES OF THIS PLAN SHEET.

4

SIDEWALK AND DRIVEWAY QUANTITIES
(TABLE 5 OF 5)

DIRECTION LT	DIRECTION RT	LOCATION SBd-18 STATION "BB1" FROM	TO	SIDEWALK MINOR Conc (CURB, SIDEWALK & CURB RAMP)	SIDEWALK CLASS 2 AB	SIDEWALK ROADWAY Ex	DRIVE-WAY JOINTED PLAIN Conc PAVEMENT (RSC)	REMOVE CONC (Misc)
LT	RT	FROM	TO	CY	CY	CY	CY	CY
X		104+15.00	104+30.00	0.9	2.9	2.9		0.7
	X	105+50.00	105+90.00	2.0	6.7	6.7		2.0
X		108+11.50	109+80.50	11.3	37.6	37.6		9.0
	X	109+69.00	110+14.00	3.7	12.4	12.4		2.9
X		110+10.00	110+24.00	0.9	3.1	3.1		0.9
X		111+39.00	112+16.00	5.1	17.1	17.1		3.4
	X	113+20.00	113+39.00	1.0	3.3	3.3		1.0
	X	113+20.00	113+39.00	0.3				
X		113+45.00	113+66.00	1.4	4.7	4.7		1.0
X		114+4.500	114+11.50	0.5	1.6	1.6		0.3
	X	114+65.00	114+85.00	1.0	3.2	3.2		1.0
	X	116+58.00	116+66.00	0.5	1.8	1.8		0.4
	X	117+70.50	118+00.00	2.0	6.6	6.6		1.4
X		119+73.50	120+34.50	4.1	13.6	13.6		3.0
X		120+65.50	121+19.50	3.6	12.0	12.0		2.6
X		121+69.00	122+31.00	4.1	13.8	13.8		3.0
	X	125+09.50	126+44.50	9.0	22.0	22.0		6.8
X		125+16.00	126+15.00	6.6	22.0	22.0		4.7
X		126+97.00	128+07.00	7.3	24.4	24.4		5.4
X		129+10.00	129+24.00	0.9	3.1	3.1		0.7
	X	129+41.00	129+62.00	1.3	4.3	4.3		1.3
	X	129+41.00	129+62.00	0.3				
	X	130+54.00	130+89.00	2.3	7.8	7.8		1.8
X		130+91.00	131+27.00	2.4	8.0	8.0		1.8
X		130+91.00	131+27.00	0.6				
X		133+60.00	133+98.00	2.5	8.4	8.4		1.9
	X	136+52.00	136+72.00	1.3	4.4	4.4		1.0
	X	138+09.50	138+24.50	1.0	3.3	3.3		0.8
	X	138+42.00	138+78.00	2.4	8.0	8.0		1.6
	X	139+50.00	139+93.50	2.9	9.7	9.7		2.1
	X	140+97.00	141+08.00	0.7	2.4	2.4		0.5
			SUB TOTAL	83.90	268.20	268.20	00.00	63.00
			(TABLE 1 TO TABLE 5) TOTAL	481.40	1561.70	1561.70	65.20	425.40

* SEWER MANHOLE FRAME AND COVER SHALL BE SUPPLIED BY CITY OF BIG BEAR LAKE

DRAINAGE STRUCTURE QUANTITIES

DIRECTION LT	DIRECTION RT	LOCATION SBd-18 STATION "BB1"	TYPE	DESCRIPTION	MINOR Conc MINOR STRUCTURE	Misc IRON AND STEEL	24-12X GRATE (N)	DRAINAGE INLET MARKER (STAMPED Conc TYPE)
LT	RT				CY	lb	EA	EA
	X	Sta 14+50	OL-7	ADJUST DI	0.56	170.0		1
	X	Sta 17+30		PARKWAY	0.30	189.6		
	X	Sta 20+59		PARKWAY	0.30	189.6		
	X	Sta 21+43		PARKWAY	0.30	189.6		
	X	Sta 33+10	GO	ADJUST DI	0.49	239.0	1	1
	X	Sta 34+89		PARKWAY	0.30	189.6		
	X	Sta 36+50	OL-7	ADJUST DI	0.56	170.0		1
	X	Sta 64+41	GO	ADJUST DI	0.49	239.0	1	1
X		Sta 64+41	OS	ADJUST DI	0.56	174.0		1
	X	Sta 68+50	OS	ADJUST DI	0.56	174.0		1
	X	Sta 70+75	OS	ADJUST DI	0.56	174.0		1
	X	Sta 81+50	OL-7	ADJUST DI	0.56	170.0		1
	X	Sta 89+50	GO	ADJUST DI	0.49	239.0	1	1
	X	Sta 90+57		PARKWAY	0.30	189.6		
	X	Sta 93+74		PARKWAY	0.30	189.6		
	X	Sta 97+09	OS	ADJUST DI	0.56	174.0		1
X		Sta 97+95	GO	ADJUST DI	0.49	239.0	1	1
	X	Sta 98+75	GO	ADJUST DI	0.49	239.0	1	1
	X	Sta 100+50	GO	ADJUST DI	0.49	239.0	1	1
	X	Sta 105+83		PARKWAY	0.30	189.6		
	X	Sta 111+36	GO	ADJUST DI	0.49	239.0	1	1
	X	Sta 116+62	GO	ADJUST DI	0.49	239.0	1	1
TOTAL					9.94	4445.2	8	15

ADJUST WATER VALVE COVER QUANTITIES

DIRECTION LT	DIRECTION RT	LOCATION SBd-18 STATION "BB1"	ADJUST VALVE BOX FRAME & COVER TO GRADE
LT	RT		EA
X		9+85.00	2
X		10+31.00	1
X		33+59.00	1
X		49+77.00	2
X		61+93.00	2
X		67+91.00	3
X		68+14.00	3
X		86+50.00	1
X		95+17.00	3
	X	100+09.00	1
X		110+52.00	4
X		128+37.00	1
TOTAL			24

ADJUST MANHOLE QUANTITIES

DIRECTION LT	DIRECTION RT	LOCATION SBd-18 STATION "BB1"	ADJUST MANHOLE TO GRADE	MANHOLE TYPE
LT	RT		EA	
X		10+99.00	1	TELEPHONE
X		16+34.00	1	TELEPHONE
X		19+90.00	1	TELEPHONE
X		28+58.00	1	TELEPHONE
X		32+84.00	1	TELEPHONE
X		37+75.00	1	TELEPHONE
X		45+30.00	1	TELEPHONE
X		56+54.00	1	TELEPHONE
X		62+56.00	1	TELEPHONE
	X	71+47.00	1	SEWER*
X		73+89.00	1	TELEPHONE
	X	74+92.00	1	SEWER
	X	77+81.00	1	SEWER
	X	78+34.00	1	SEWER
X		80+49.00	1	TELEPHONE
	X	81+00.00	1	SEWER
	X	83+33.00	1	SEWER
X		84+00.00	1	STORM DRAIN
X		92+74.00	1	TELEPHONE
	X	100+29.00	1	SEWER
	X	103+00.00	1	SEWER
	X	105+74.00	1	SEWER
X		108+40.00	1	STORM DRAIN
	X	110+71.00	1	SEWER
	X	113+27.00	1	STORM DRAIN
X		114+15.00	1	TELEPHONE
X		120+05.00	1	TELEPHONE
	X	126+16.00	1	TELEPHONE
	X	136+62.00	1	SEWER
	X	138+60.00	1	SEWER
TOTAL			30	

REMOVE CHAIN LINK FENCE

DIRECTION LT	DIRECTION RT	LOCATION SBd-18 STATION "BB1" FROM	TO	REMOVE CHAIN LINK FENCE
LT	RT	FROM	TO	FT
	X	79+22.00	79+54.00	64.00
TOTAL				64.00

CHAIN LINK FENCE

DIRECTION LT	DIRECTION RT	LOCATION SBd-18 STATION "BB1" FROM	TO	CHAIN LINK FENCE (CL4)
LT	RT	FROM	TO	FT
	X	79+22.00	79+54.00	60.00
TOTAL				60.00

4 **REPLACED PER ADDENDUM No. 4 DATED FEBRUARY 17, 2016**

SUMMARY OF QUANTITIES
Q-4

STATE OF CALIFORNIA - DEPARTMENT OF TRANSPORTATION
Caltrans® DESIGN

FUNCTIONAL SUPERVISOR: JUSTINE NIU
CALCULATED-DESIGNED BY: ALAN BISI
CHECKED BY: ANNABELL WANG
REVISED BY / DATE REVISED

LAST REVISION 06-26-15
DATE PLOTTED => 16-FEB-2016
TIME PLOTTED => 15:44

NOTES: (SHEET E-2 AND E-3 ONLY)

1. SEE SHEET E-3 FOR LEGEND AND SCHEDULES.
2. FOR ACCURATE RIGHT OF WAY DATA, CONTACT RIGHT OF WAY ENGINEERING AT THE DISTRICT OFFICE.
3. SEE ROADWAY CONSTRUCTION DETAILS FOR EXACT LOCATION OF SIGNAL AND LIGHTING STANDARDS AND PEDESTRIAN PUSH BUTTON POSTS.
4. SEE ROADWAY CONSTRUCTION DETAILS FOR CURB-MOUNTED PEDESTRIAN PUSHBUTTONS POSTS.

Dist	COUNTY	ROUTE	POST MILES TOTAL PROJECT	SHEET No.	TOTAL SHEETS
08	SBd	18	49.0/51.7	124	179

6-26-15
REGISTERED CIVIL ENGINEER DATE

6-26-15
PLANS APPROVAL DATE

REGISTERED PROFESSIONAL ENGINEER FERDINAND DE LA CRUZ No. 66070 Exp. 06-30-16 ELECTRICAL STATE OF CALIFORNIA

THE STATE OF CALIFORNIA OR ITS OFFICERS OR AGENTS SHALL NOT BE RESPONSIBLE FOR THE ACCURACY OR COMPLETENESS OF SCANNED COPIES OF THIS PLAN SHEET.

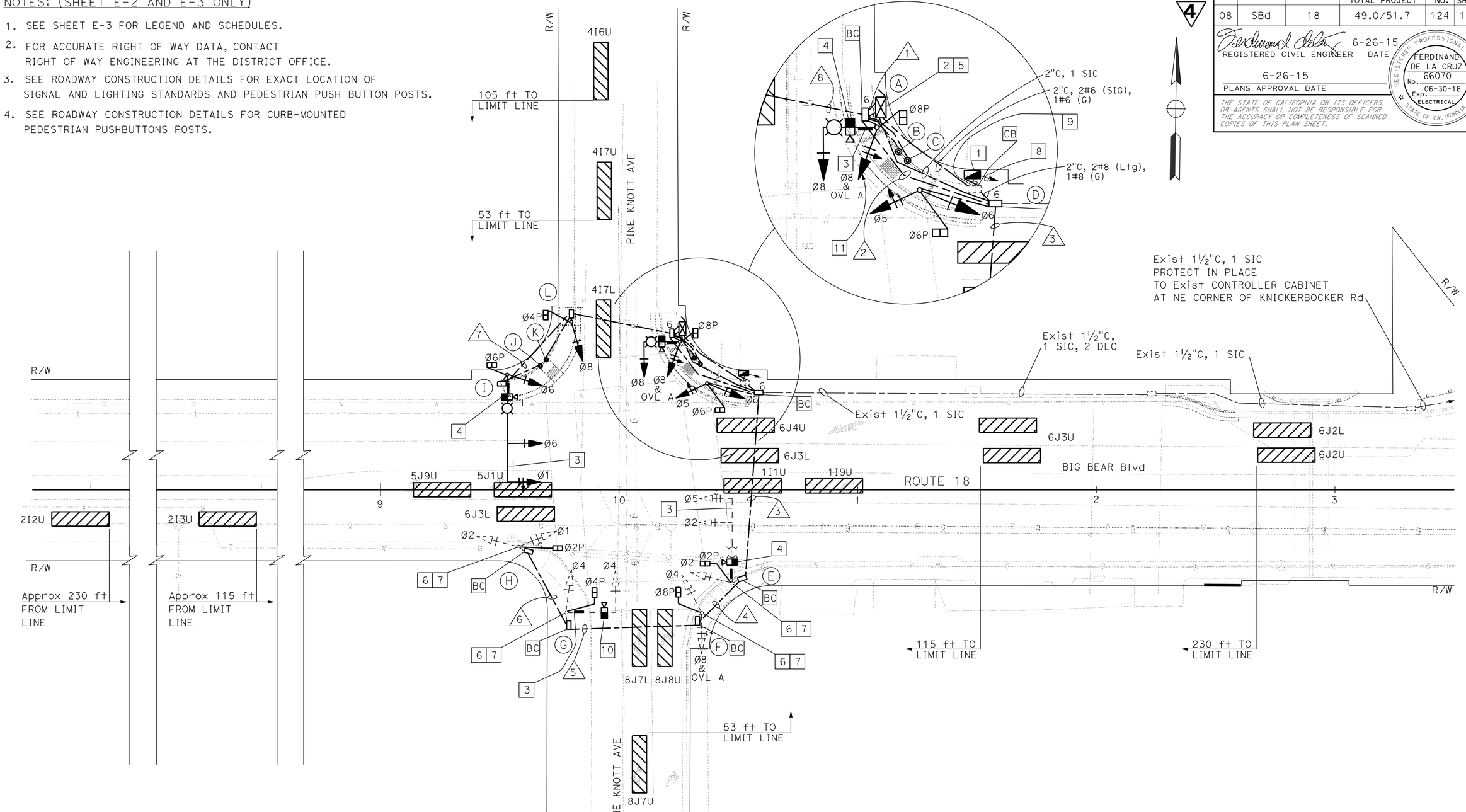

4 REPLACED PER ADDENDUM No. 4 DATED FEBRUARY 17, 2016

APPROVED FOR ELECTRICAL WORK ONLY

MODIFY SIGNAL AND LIGHTING
(LOCATION 1)
SCALE 1" = 20'

E-2

STATE OF CALIFORNIA - DEPARTMENT OF TRANSPORTATION
Caltrans
ELECTRICAL DESIGN B

FUNCTIONAL SUPERVISOR: FERDINAND DE LA CRUZ
CALCULATED-DESIGNED BY: LUIS PENALOZA
CHECKED BY: FERDINAND DE LA CRUZ
REVISED BY
DATE REVISED

LAST REVISION 06-26-15
DATE PLOTTED => 16-FEB-2016
TIME PLOTTED => 15:44

Dist	COUNTY	ROUTE	POST MILES TOTAL PROJECT	SHEET No.	TOTAL SHEETS
08	SBd	18	49.0/51.7	125	179

REGISTERED CIVIL ENGINEER 6-26-15 DATE

6-26-15
PLANS APPROVAL DATE

REGISTERED PROFESSIONAL ENGINEER FERDINAND DE LA CRUZ No. 66070 Exp. 06-30-16 ELECTRICAL STATE OF CALIFORNIA

THE STATE OF CALIFORNIA OR ITS OFFICERS OR AGENTS SHALL NOT BE RESPONSIBLE FOR THE ACCURACY OR COMPLETENESS OF SCANNED COPIES OF THIS PLAN SHEET.

4

LEGEND: (SHEET E-2 AND E-3 ONLY)

1. INSTALL 120/240 V, 1Ø, 3 WIRE, TYPE III-CF SERVICE EQUIPMENT ENCLOSURE ON EXISTING FOUNDATION, WITH THE FOLLOWING CIRCUIT BREAKERS:
   - METER A: 100 A, 240 V, 2P, CB. MAIN BREAKER (TC-1)
     50 A, 120 V, 1P, CB. (SIGNAL)
   - METER B: 100 A, 240 V, 2P, CB. MAIN BREAKER (LS-3)
     30 A, 240 V, 2P, CB. (LIGHTING)
     15 A, 120 V, 1P, CB. (LIGHTING CONTROL)
2. INSTALL DEPARTMENT FURNISHED MODEL 2070 CONTROLLER ASSEMBLY WITH TYPE 332 CABINET AND BATTERY BACKUP SYSTEM. REFER TO SHEETS E-20, E-21 AND E-22 FOR DETAILS.
3. FOR SIGN DETAILS AND STREET NAME SIGNS, SEE SQ-1 PLAN SHEET.
4. INSTALL VIVDS CAMERA PER STANDARD PLAN ES-7R, DETAIL B.
5. INSTALL LONG TERM EVOLUTION (LTE) MODEM IN CONTROLLER CABINET.
6. RC EXISTING PEDESTRIAN PUSH BUTTON. INSTALL APS.
7. RC EXISTING PEDESTRIAN SIGNAL HEAD. INSTALL LED COUNTDOWN PEDESTRIAN SIGNAL FACE MODULE.
8. EXISTING 3"C, 3#2 (POWER FROM BVE). BVE SHALL CONNECT TO THIS EXISTING CONDUIT AND PROVIDE SERVICE EQUIPMENT ENCLOSURE WITH POWER.
9. EXIST 1½"C, 2#6, 2#10, 2#12, 1#8. RC 2#6, 2#10, 2#12, 1#8.
   INSTALL 2#6 (SIG), 1#8 (LTG), 1#6 (G).
10. INSTALL VIVDS CAMERA PER STANDARD PLAN ES-7R, DETAIL A.
11. INSTALL VEHICLE SIGNAL FACE PER DETAIL 'C' SHOWN ON THIS SHEET.
12. REFER TO DETAIL 'D' ON THIS SHEET.
13. REFER TO DETAIL 'E' ON THIS SHEET.
14. CONNECT APS CABLE (20#9) TO PED HEAD WITH SAME PHASE AND IN SAME INTERSECTION QUADRANT.
15. REFER TO DETAIL 'F' ON THIS SHEET.

ABBREVIATIONS:

BVE	-	BEAR VALLEY ELECTRIC
TC-1	-	SCE TRAFFIC CONTROL RATE
LS-3	-	SCE LIGHTING RATE

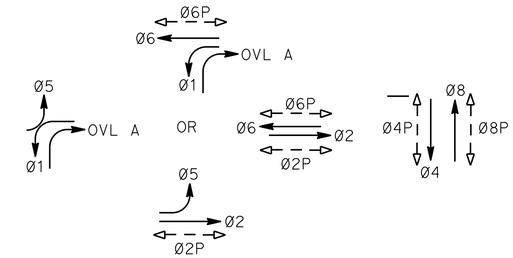

PHASE DIAGRAM
STEADY DEMAND SEQUENCE

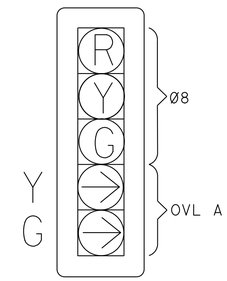

DETAIL 'C'

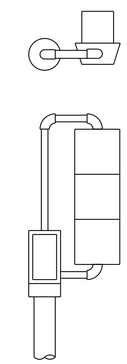

DETAIL 'D'
(MODIFIED TV-1-T)

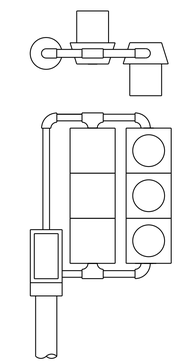

DETAIL 'E'
(MODIFIED TV-2-T)

POLE and EQUIPMENT SCHEDULE

No.	STANDARD TYPE	STANDARD SMA	STANDARD LMA	VEH SIG MTG Mast Arm	VEH SIG MTG POLE	PED SIG Mtg	PPB Ø	PPB ARROW	LED LUM	SPECIAL REQUIREMENTS
A	17-3-100	15'	12'	MAS	SV-1-T	SP-1-T			165 W	INSTALL D3 SIGN (BIG BEAR Blvd) 3
B	PPB POST						6	←		14 15
C	PPB POST						8	→		14 15
D	1-A				13	SP-1-T				
*E	24-4-80	35'	12'	MAS MAS	SV-1-T	SP-1-T	8	←	165 W	RC IISNS. INSTALL D3 SIGN (PINE KNOTT Ave) 3 RC Exist Lum. INSTALL LED Lum. 14
*F	1-A				TV-2-T	SP-1-T	2	→		14
*G	16-2-80	20'	12'	MAS	SV-1-T	SP-1-T	2	←	165 W	RC IISNS. INSTALL D3 SIGN (BIG BEAR Blvd) 3 RC Exist Lum. INSTALL LED Lum. 14
*H	1-A				TV-2-T	SP-1-T	4	→		14
I	26-4-100	45'	15'	MAS MAS	SV-1-T	SP-1-T			165 W	RC IISNS. INSTALL D3 SIGN (PINE KNOTT Ave) 3 INSTALL EXISTING "NO U TURN" SIGN. F=16 ft
J	PPB POST						4	←		14 15
K	PPB POST						6	→		14 15
L	1-A				12	SP-1-T				

* EXISTING EQUIPMENT TO REMAIN.

CONDUCTOR AND CONDUIT SCHEDULE

CABLE SCHEDULE			CONDUIT RUN AND SIZE							
CABLE TYPE	POLE	PHASE	1	2	3	4	5	6	7	8
VEH-PED 12CSC	A	8,OVL A,8P	1							
	B	6	1							
	C	8	1							
	D	5,6,6P	1	1						
	E	2,5,2P 8	1 1	1 1	1 1					
	F	8,OVL A,8P 4 2	2 1	2 1	2 1	2 1				
PPB 3CSC	G	4,4P 2	1 1	1 1	1 1	1 1	1 1			
	H	1,2,2P 4	1 1	1 1	1 1	1 1	1 1	1 1		
	I	1,6,6P	1						1	1
	J	4	1						1	1
	K	6	1							1
	L	8,4P	1							1
		TOTAL	9 8	6 4	5 4	4 3	2 2	1 1	1 1	2 2
AWG		CIRCUIT								
#8		LIGHTING		2	2				2	2
#8		GROUND	1	1	1	1	1	1	1	1
APS CABLE (20#9)				1		2		2	2	
VIVID POWER CABLE			4	2	2	1	1		1	1
VIVID VIDEO CABLE			4	2	2	1	1		1	1
CONDUIT SIZE			2-4"	4"	4"	4"	3"	3"	3"	3"

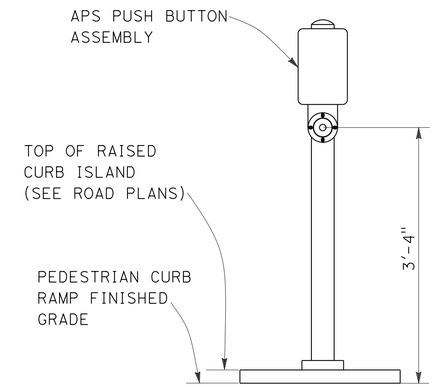

PUSH BUTTON ASSEMBLY POST
DETAIL "F"

4 **REPLACED PER ADDENDUM No. 4 DATED FEBRUARY 17, 2016**

APPROVED FOR ELECTRICAL WORK ONLY

MODIFY SIGNAL AND LIGHTING
(LOCATION 1)
NO SCALE

E-3

STATE OF CALIFORNIA - DEPARTMENT OF TRANSPORTATION
Caltrans
ELECTRICAL DESIGN B
FUNCTIONAL SUPERVISOR: FERDINAND DE LA CRUZ
CALCULATED-DESIGNED BY: LUIS PENALOZA
CHECKED BY: FERDINAND DE LA CRUZ
REVISED BY
DATE REVISED

LAST REVISION 06-26-15
DATE PLOTTED => 16-FEB-2016
TIME PLOTTED => 15:44

Dist	COUNTY	ROUTE	POST MILES TOTAL PROJECT	SHEET No.	TOTAL SHEETS
08	SBd	18	49.0/51.7	127	179

REGISTERED CIVIL ENGINEER 6-26-15 DATE

6-26-15
PLANS APPROVAL DATE

REGISTERED PROFESSIONAL ENGINEER FERDINAND DE LA CRUZ No. 66070 Exp. 06-30-16 ELECTRICAL STATE OF CALIFORNIA

THE STATE OF CALIFORNIA OR ITS OFFICERS OR AGENTS SHALL NOT BE RESPONSIBLE FOR THE ACCURACY OR COMPLETENESS OF SCANNED COPIES OF THIS PLAN SHEET.

NOTES: (SHEET E-5 AND E-6 ONLY)

1. SEE SHEET E-6 FOR LEGEND AND SCHEDULES.
2. FOR ACCURATE RIGHT OF WAY DATA, CONTACT RIGHT OF WAY ENGINEERING AT THE DISTRICT OFFICE.
3. SEE ROADWAY CONSTRUCTION DETAILS FOR EXACT LOCATION OF SIGNAL AND LIGHTING STANDARDS AND PEDESTRIAN PUSH BUTTON POSTS.
4. SEE ROADWAY CONSTRUCTION DETAILS FOR CURB-MOUNTED PEDESTRIAN PUSHBUTTONS POSTS.

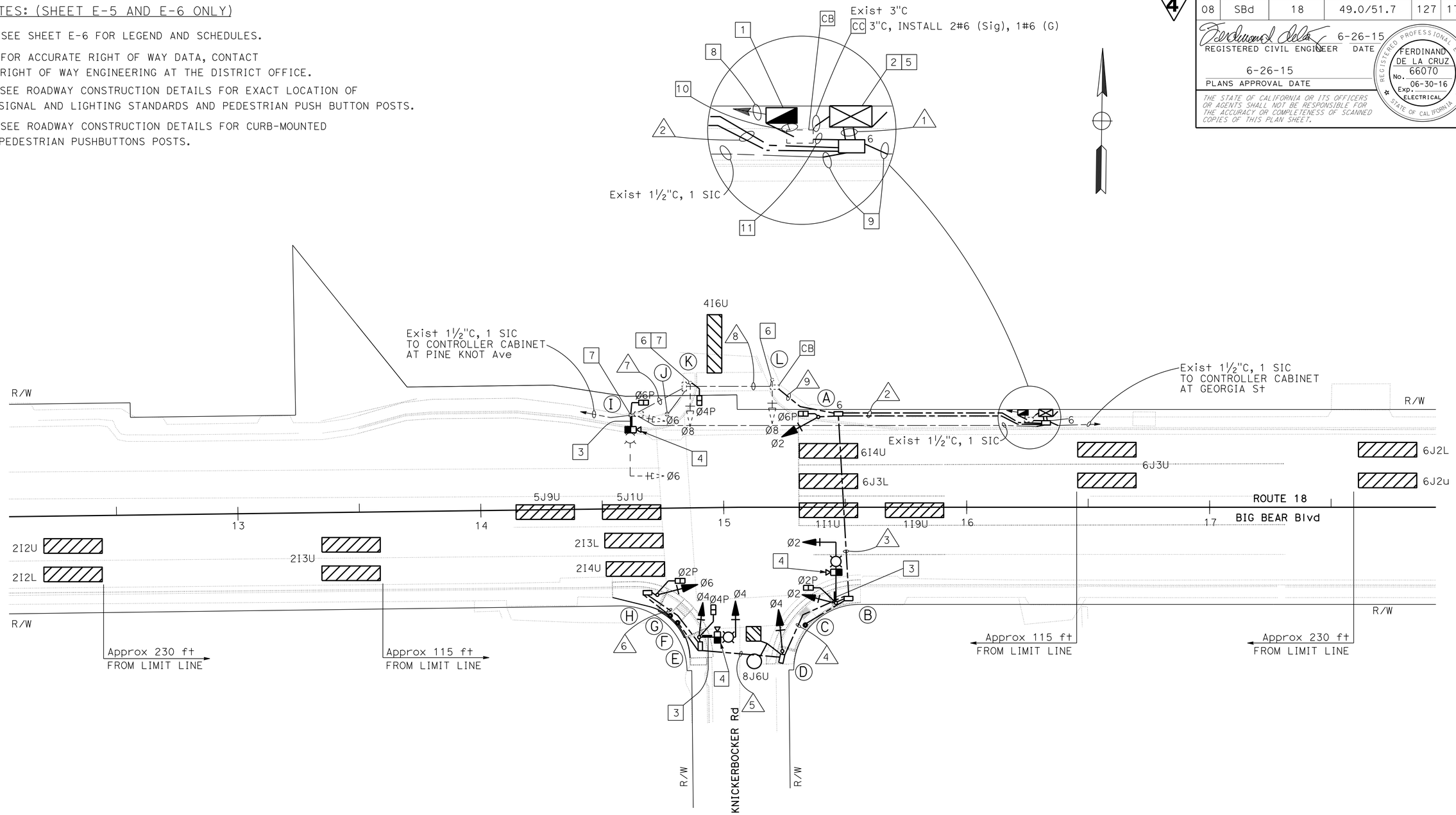

4 **REPLACED PER ADDENDUM No. 4 DATED FEBRUARY 17, 2016**

APPROVED FOR ELECTRICAL WORK ONLY

MODIFY SIGNAL AND LIGHTING
(LOCATION 2)
SCALE 1" = 20'

E-5

STATE OF CALIFORNIA - DEPARTMENT OF TRANSPORTATION
Caltrans
ELECTRICAL DESIGN B

FUNCTIONAL SUPERVISOR: FERDINAND DE LA CRUZ
CALCULATED-DESIGNED BY: LUIS PENALOZA
CHECKED BY: FERDINAND DE LA CRUZ
REVISED BY / DATE REVISED

LAST REVISION 06-26-15 | DATE PLOTTED => 16-FEB-2016 | TIME PLOTTED => 15:44

Dist	COUNTY	ROUTE	POST MILES TOTAL PROJECT	SHEET No.	TOTAL SHEETS
08	SBd	18	49.0/51.7	128	179

REGISTERED CIVIL ENGINEER 6-26-15 DATE

6-26-15
PLANS APPROVAL DATE

REGISTERED PROFESSIONAL ENGINEER FERDINAND DE LA CRUZ No. 66070 Exp. 06-30-16 ELECTRICAL STATE OF CALIFORNIA

THE STATE OF CALIFORNIA OR ITS OFFICERS OR AGENTS SHALL NOT BE RESPONSIBLE FOR THE ACCURACY OR COMPLETENESS OF SCANNED COPIES OF THIS PLAN SHEET.

4

LEGEND: (SHEET E-5 AND E-6 ONLY)

1. INSTALL 120/240 V, 1Ø, 3 WIRE, TYPE III-CF SERVICE EQUIPMENT ENCLOSURE ON EXISTING FOUNDATION, WITH THE FOLLOWING CIRCUIT BREAKERS:
   - METER A: 100 A, 240 V, 2P, CB. MAIN BREAKER (TC-1)
     50 A, 120 V, 1P, CB. (SIG)
   - METER B: 100 A, 240 V, 2P, CB. MAIN BREAKER (LS-3)
     30 A, 240 V, 2P, CB. (LIGHTING)
     15 A, 120 V, 1P, CB. (LIGHTING CONTROL)
2. INSTALL DEPARTMENT FURNISHED MODEL 2070 CONTROLLER ASSEMBLY WITH TYPE 332 CABINET AND BATTERY BACKUP SYSTEM. REFER TO SHEETS E-20, E-21 AND E-22 FOR DETAILS.
3. FOR SIGN DETAILS AND STREET NAME SIGNS, SEE SQ-1 PLAN SHEET.
4. INSTALL VIVDS CAMRERA PER ES-7R, DETAIL B.
5. INSTALL LONG TERM EVOLUTION (LTE) MODEM IN CONTROLLER CABINET.
6. RC EXISTING PEDESTRIAN PUSH BUTTON. INSTALL APS.
7. RC EXISTING PEDESTRIAN SIGNAL HEAD. INSTALL LED COUNTDOWN PEDESTRIAN SIGNAL FACE MODULE.
8. EXISTING 3"C, 3#2 (POWER FROM BVE). BVE SHALL CONNECT TO THIS EXISTING CONDUIT AND PROVIDE SERVICE EQUIPMENT ENCLOSURE WITH POWER.
9. 1½"C, CC 1½"C. RR EXISTING SIC.
10. Exist 1½"C, INSTALL 2#6 (Sig), 2#8 (Lt+g), 1#6 (G).
11. 1½"C, 2#8 (Lt+g), 1#8 (G).
12. REFER TO DETAIL 'D' ON THIS SHEET.
13. CONNECT APS CABLE (20#9) TO PED HEAD WITH SAME PHASE AND IN THE SAME INTERSECTION QUADRANT.

ABBREVIATIONS:

SCE	-	SOUTHERN CALIFORNIA EDISON
TC-1	-	SCE TRAFFIC CONTROL RATE
LS-3	-	SCE LIGHTING RATE

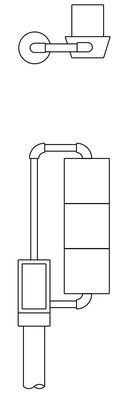

DETAIL 'D'
(MODIFIED TV-1-T)

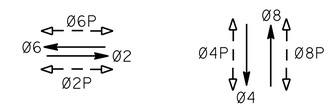

PHASE DIAGRAM
STEADY DEMAND SEQUENCE

POLE and EQUIPMENT SCHEDULE

POLE	STANDARD TYPE	STANDARD SMA	STANDARD LMA	VEH SIG MTG MAST ARM	VEH SIG MTG POLE	PED SIG MTG	APS PPB Ø	APS PPB ARROW	LED LUM (W)	SPECIAL REQUIREMENTS	
Ⓐ	1-A				12	SP-1-T					
Ⓑ	19-3-100	25'	15'	MAS	SV-1-T	SP-1-T			165	INSTALL D3 SIGN (KNICKERBOCKER Rd)	3
Ⓒ	PPB POST						2	→			13
Ⓓ	1-A				12						
Ⓔ	17-3-100	15'	12'	MAS	SV-1-T	SP-1-T			165	INSTALL D3 SIGN (BIG BEAR Blvd)	3
Ⓕ	PPB POST						2	←			13
Ⓖ	PPB POST						4	→			13
Ⓗ	1-A				12	SP-1-T					
*Ⓘ	19-2-80	25'	12'	MAS	SV-1-T	SP-1-T			165	RC EXISTING IISNS. INSTALL D3 SIGN (KNICKERBOCKER Rd) RC EXISTING Lum. INSTALL LED Lum.	3
*Ⓙ	PPB POST						4	←			13
*Ⓚ	1-A				SV-1-T	SP-1-T	6	→			13
*Ⓛ	1-A				SV-1-T		6	←			13

* EXISTING EQUIPMENT TO REMAIN

CONDUCTOR AND CONDUIT SCHEDULE

CABLE TYPE	POLE	PHASE	1	2	3	4	5	6	*7	*8	9
VEH-PED 12CSC	Ⓐ	2,6P	1	1							
	Ⓑ	2,2P	1	1	1						
	Ⓒ	2	1	1	1						
	Ⓓ	4	1	1	1	1					
	Ⓔ	4,4P	1	1	1	1	1				
	Ⓕ	2	1	1	1	1	1				
	Ⓖ	4	1	1	1	1	1	1			
	Ⓗ	6,2P	1	1	1	1	1	1			
	Ⓘ	6,6P	1	1					1	1	1
	Ⓙ	4	1	1						1	1
	Ⓚ	8,4P / 6	1 / 1	1 / 1						1 / 1	1 / 1
PPB 3CSC	Ⓛ	8 / 6	1 / 1	1 / 1							1 / 1
		TOTAL	8 / 6	8 / 6	4 / 3	3 / 2	2 / 2	1 / 1	1 / 0	2 / 2	3 / 3

AWG	CIRCUIT	1	2	3	4	5	6	*7	*8	9
#8	LIGHTING		2	2	2	2		2	2	2
#8	GROUND	1	1	1	1	1	1	1	1	1
SIC		2								
APS CABLE (20#9)							2	1		1
VIVID POWER CABLE		3	3	2	1	1		1	1	1
VIVID VIDEO CABLE		3	3	2	1	1		1	1	1
DETECTORS-TYPE B DLC										
PHASE										
Ø8		1	1	1	1					
TOTAL		1	1	1	1					
CONDUIT SIZE		2-4"	2-4"	4"	3.5"	3"	2"	2"	2.5"	3.5"

* EXISTING CONDUIT

MODIFY SIGNAL AND LIGHTING
(LOCATION 2)
SCALE 1" = 20'

E-6

4 **REPLACED PER ADDENDUM No. 4 DATED FEBRUARY 17, 2016**

APPROVED FOR ELECTRICAL WORK ONLY

REVISED BY | DATE REVISED
LUIS PENALOZA | FERDINAND DE LA CRUZ
CALCULATED-DESIGNED BY | CHECKED BY
FUNCTIONAL SUPERVISOR: FERDINAND DE LA CRUZ

STATE OF CALIFORNIA - DEPARTMENT OF TRANSPORTATION
Caltrans
ELECTRICAL DESIGN B

LAST REVISION 06-26-15 | DATE PLOTTED => 16-FEB-2016 | TIME PLOTTED => 15:44

Dist	COUNTY	ROUTE	POST MILES TOTAL PROJECT	SHEET No.	TOTAL SHEETS
08	SBd	18	49.0/51.7	130	179

REGISTERED CIVIL ENGINEER 6-26-15 DATE

6-26-15
PLANS APPROVAL DATE

REGISTERED PROFESSIONAL ENGINEER FERDINAND DE LA CRUZ No. 66070 Exp. 06-30-16 ELECTRICAL STATE OF CALIFORNIA

THE STATE OF CALIFORNIA OR ITS OFFICERS OR AGENTS SHALL NOT BE RESPONSIBLE FOR THE ACCURACY OR COMPLETENESS OF SCANNED COPIES OF THIS PLAN SHEET.

NOTES: (SHEET E-8 AND E-9 ONLY)

1. SEE SHEET E-9 FOR LEGEND AND SCHEDULES.
2. FOR ACCURATE RIGHT OF WAY DATA, CONTACT RIGHT OF WAY ENGINEERING AT THE DISTRICT OFFICE.
3. SEE ROADWAY CONSTRUCTION DETAILS FOR EXACT LOCATION OF SIGNAL AND LIGHTING STANDARDS AND PEDESTRIAN PUSH BUTTON POSTS.
4. SEE ROADWAY CONSTRUCTION DETAILS FOR CURB-MOUNTED PEDESTRIAN PUSHBUTTONS POSTS.

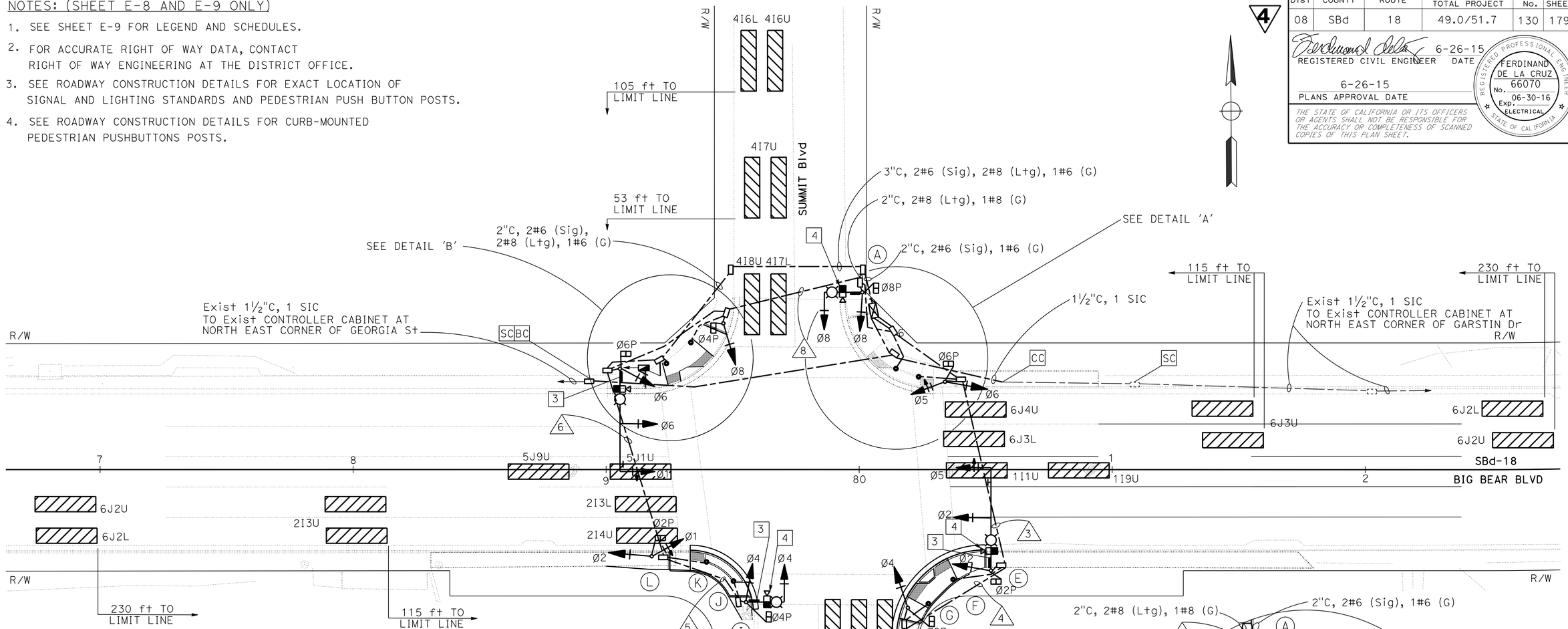

4 **REPLACED PER ADDENDUM No. 4 DATED FEBRUARY 17, 2016**

APPROVED FOR ELECTRICAL WORK ONLY

MODIFY SIGNAL AND LIGHTING
(LOCATION 3)
SCALE 1" = 20'

E-8

STATE OF CALIFORNIA - DEPARTMENT OF TRANSPORTATION
Caltrans
ELECTRICAL DESIGN B
FUNCTIONAL SUPERVISOR: FERDINAND DE LA CRUZ
CALCULATED-DESIGNED BY: LUIS PENALOZA
CHECKED BY: FERDINAND DE LA CRUZ
REVISED BY
DATE REVISED

LAST REVISION 06-26-15
DATE PLOTTED => 16-FEB-2016
TIME PLOTTED => 15:44

Dist	COUNTY	ROUTE	POST MILES TOTAL PROJECT	SHEET No.	TOTAL SHEETS
08	SBd	18	49.0/51.7	131	179

4

6-26-15
REGISTERED CIVIL ENGINEER DATE

6-26-15
PLANS APPROVAL DATE

REGISTERED PROFESSIONAL ENGINEER FERDINAND DE LA CRUZ No. 66070 Exp. 06-30-16 ELECTRICAL STATE OF CALIFORNIA

THE STATE OF CALIFORNIA OR ITS OFFICERS OR AGENTS SHALL NOT BE RESPONSIBLE FOR THE ACCURACY OR COMPLETENESS OF SCANNED COPIES OF THIS PLAN SHEET.

LEGEND: (SHEET E-8 AND E-9 ONLY)

1. INSTALL 120/240 V, 1Ø, 3 WIRE, TYPE III-CF SERVICE EQUIPMENT ENCLOSURE ON EXISTING FOUNDATION, WITH THE FOLLOWING CIRCUIT BREAKERS:
   - METER A: 100 A, 240 V, 2P, CB. MAIN BREAKER (TC-1)
     50 A, 120 V, 1P, CB. (SIGNALS)
   - METER B: 100 A, 240 V, 2P, CB. MAIN BREAKER (LS-3)
     30 A, 240 V, 2P, CB. (LIGHTING)
     15 A, 120 V, 1P, CB. (LIGHTING CONTROL)
2. INSTALL DEPARTMENT FURNISHED MODEL 2070 CONTROLLER ASSEMBLY WITH TYPE 332 CABINET AND BATTERY BACKUP SYSTEM. REFER TO SHEETS E-20, E-21 AND E-22 FOR DETAILS.
3. FOR SIGN DETAILS AND STREET NAME SIGNS, SEE SQ-1 PLAN SHEET.
4. INSTALL VIVDS CAMRERA PER ES-7R, DETAIL B.
5. INSTALL LONG TERM EVOLUTION (LTE) MODEM IN CONTROLLER CABINET.
6. EXISTING 3"C, 3#2 (POWER FROM BVE). BVE SHALL CONNECT TO THIS EXISTING CONDUIT AND PROVIDE SERVICE EQUIPMENT ENCLOSURE WITH POWER.
7. 2"C, 2 SIC.
8. REFER TO DETAIL 'D' ON THIS SHEET.
9. REFER TO DETAIL 'E' ON THIS SHEET.
10. REFER TO DETAIL 'F' ON THIS SHEET.
11. CONNECT APS CABLE (20#9) TO PED HEAD WITH SAME PHASE AND IN SAME INTERSECTION QUADRANT.

ABBREVIATIONS:

BVE	-	BEAR VALLEY ELECTRIC
TC-1	-	SCE TRAFFIC CONTROL RATE
LS-3	-	SCE LIGHTING RATE

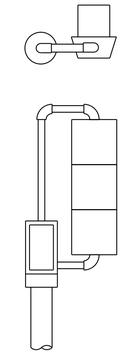

DETAIL 'D'
(MODIFIED TV-1-T)

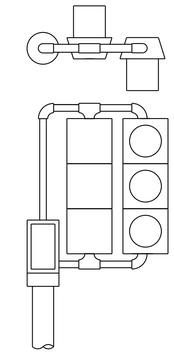

DETAIL 'E'
(MODIFIED TV-2-T)

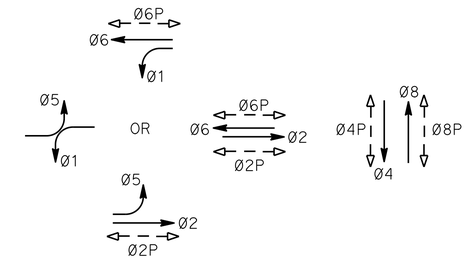

PHASE DIAGRAM
STEADY DEMAND SEQUENCE

POLE AND EQUIPMENT SCHEDULE

No.	STANDARD TYPE	STANDARD SMA	STANDARD LMA	VEH SIG MTG Mast Arm	VEH SIG MTG POLE	PED SIG Mtg	PPB Ø	PPB ARROW	LED LUM	SPECIAL REQUIREMENTS	
A	17-3-100	15'	15'	MAS	SV-1-T	SP-1-T			165 W	INSTALL D3 SIGN (BIG BEAR BLVD)	3
B	PPB POST						6	→			10 11
C	PPB POST						8	←			10 11
D	1-A				9	SP-1-T					
E	26-4-100	40'	15'	MAS MAS	SV-1-T	SP-1-T			165 W	INSTALL D3 SIGN (SUMMIT BLVD) INSTALL EXISTING "NO U TURN" SIGN. F=19 ft	3
F	PPB POST						8	←			11
G	PPB POST						2	→			11
H	1-A				8	SP-1-T					
I	17-3-100	15'	15'	MAS	SV-1-T	SP-1-T			165 W	INSTALL D3 SIGN (BIG BEAR BLVD)	3
J	PPB POST						2	→			10 11
K	PPB POST						4	←			10 11
L	1-A				9	SP-1-T					
M	26-4-100	40'	15'	MAS MAS	SV-1-T	SP-1-T			165 W	INSTALL D3 SIGN (SUMMIT BLVD) INSTALL EXISTING "NO U TURN" SIGN. F=18 ft	3
N	PPB POST						4	←			11
O	PPB POST						6	→			11
P	1-A				8	SP-1-T					

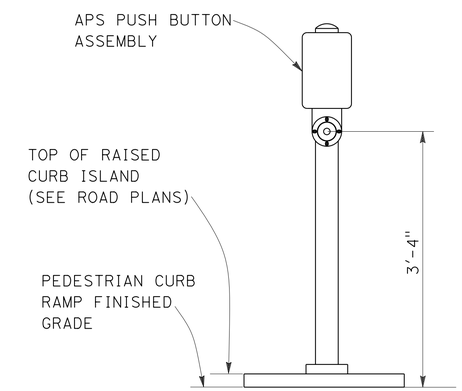

PUSH BUTTON ASSEMBLY POST
DETAIL "F"

CONDUCTOR AND CONDUIT SCHEDULE

CABLE SCHEDULE			CONDUIT RUN AND SIZE									
CABLE TYPE	POLE	PHASE	1	2	3	4	5	6	7	8	9	
VEH-PED 12CSC	A	8,8P	1								1	
	B	6	1									
	C	8	1	1								
	D	5,6,6P	1	1								
	E	2,5,2P	1	1	1							
	F	8	1	1	1							
	G	2	1	1	1	1						
	H	4,8P	1	1	1	1						
	I	4,4P	1				1	1	1	1	1	
	J	2	1				1	1	1	1	1	
	K	4	1					1	1	1	1	
	L	1,2,2P	1					1	1	1	1	
	M	1,6,6P	1						1	1	1	
	N	4	1						1	1	1	
	O	6	1							1	1	
PPB 3CSC	P	8,4P	1							1	1	
		TOTAL	8 8	3 3	2 2	1 1	1 1	2 2	3 3	4 4	5 4	
AWG	CIRCUIT											
#8	LIGHTING			2	2		2	2			2	
#8	GROUND		1	1	1	1	1	1	1	1	1	
APS CABLE (20#9)				2		2	2		2			
VIVID POWER CABLE			4	1			1	1	2	2	3	
VIVID VIDEO CABLE			4	1			1	1	2	2	3	
CONDUIT SIZE			2-4"	4"	3"	3"	3"	3"	4"	4"	4"	

4 **REPLACED PER ADDENDUM No. 4 DATED FEBRUARY 17, 2016**

APPROVED FOR ELECTRICAL WORK ONLY

MODIFY SIGNAL AND LIGHTING
(LOCATION 3)
SCALE 1" = 20'

E-9

STATE OF CALIFORNIA - DEPARTMENT OF TRANSPORTATION
Caltrans®
ELECTRICAL DESIGN B

LUIS PENALOZA | FERDINAND DE LA CRUZ | FERDINAND DE LA CRUZ | REVISED BY | DATE REVISED | CALCULATED-DESIGNED BY | CHECKED BY | FUNCTIONAL SUPERVISOR

LAST REVISION 06-26-15 | DATE PLOTTED => 16-FEB-2016 | TIME PLOTTED => 15:44

Dist	COUNTY	ROUTE	POST MILES TOTAL PROJECT	SHEET No.	TOTAL SHEETS
08	SBd	18	49.0/51.7	133	179

REGISTERED CIVIL ENGINEER 6-26-15 DATE

6-26-15
PLANS APPROVAL DATE

REGISTERED PROFESSIONAL ENGINEER FERDINAND DE LA CRUZ No. 66070 Exp. 06-30-16 ELECTRICAL STATE OF CALIFORNIA

THE STATE OF CALIFORNIA OR ITS OFFICERS OR AGENTS SHALL NOT BE RESPONSIBLE FOR THE ACCURACY OR COMPLETENESS OF SCANNED COPIES OF THIS PLAN SHEET.

NOTES: (SHEET E-11 AND E-12 ONLY)

1. SEE SHEET E-12 FOR LEGEND AND SCHEDULES.
2. FOR ACCURATE RIGHT OF WAY DATA, CONTACT RIGHT OF WAY ENGINEERING AT THE DISTRICT OFFICE.
3. SEE ROADWAY CONSTRUCTION DETAILS FOR EXACT LOCATION OF SIGNAL AND LIGHTING STANDARDS AND PEDESTRIAN PUSH BUTTON POSTS.
4. SEE ROADWAY CONSTRUCTION DETAILS FOR CURB-MOUNTED PEDESTRIAN PUSHBUTTONS POSTS.

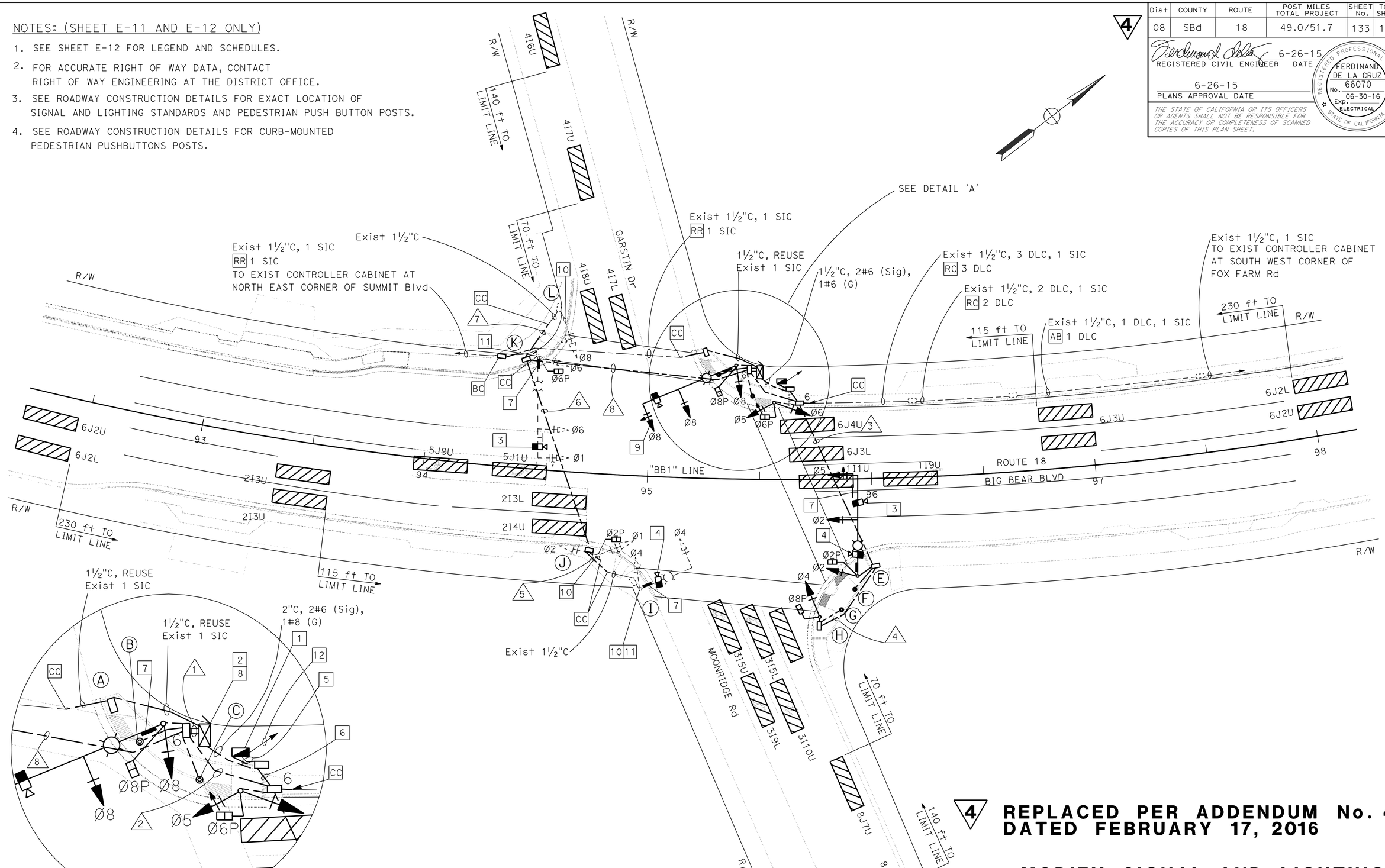

APPROVED FOR ELECTRICAL WORK ONLY

4 **REPLACED PER ADDENDUM No. 4 DATED FEBRUARY 17, 2016**

MODIFY SIGNAL AND LIGHTING
(LOCATION 4)
SCALE 1" = 20'

E-11

STATE OF CALIFORNIA - DEPARTMENT OF TRANSPORTATION
Caltrans®
ELECTRICAL DESIGN B

FUNCTIONAL SUPERVISOR: FERDINAND DE LA CRUZ
CALCULATED-DESIGNED BY: LUIS PENALOZA
CHECKED BY: FERDINAND DE LA CRUZ
REVISED BY
DATE REVISED

LAST REVISION 06-26-15
DATE PLOTTED => 16-FEB-2016
TIME PLOTTED => 15:44

Dist	COUNTY	ROUTE	POST MILES TOTAL PROJECT	SHEET No.	TOTAL SHEETS
08	SBd	18	49.0/51.7	134	179

4

REGISTERED CIVIL ENGINEER 6-26-15 DATE

6-26-15
PLANS APPROVAL DATE

REGISTERED PROFESSIONAL ENGINEER FERDINAND DE LA CRUZ No. 66070 Exp. 06-30-16 ELECTRICAL STATE OF CALIFORNIA

THE STATE OF CALIFORNIA OR ITS OFFICERS OR AGENTS SHALL NOT BE RESPONSIBLE FOR THE ACCURACY OR COMPLETENESS OF SCANNED COPIES OF THIS PLAN SHEET.

LEGEND: (SHEET E-11 AND E-12 ONLY)

1. INSTALL 120/240 V, 1Ø, 3 WIRE, TYPE III-CF SERVICE EQUIPMENT ENCLOSURE ON EXISTING FOUNDATION, WITH THE FOLLOWING CIRCUIT BREAKERS:
   - METER A: 100 A, 240 V, 2P, CB. MAIN BREAKER (TC-1)
     50 A, 120 V, 1P, CB. (SIGNALS)
   - METER B: 100 A, 240 V, 2P, CB. MAIN BREAKER (LS-3)
     30 A, 240 V, 2P, CB. (LIGHTING)
     15 A, 120 V, 1P, CB. (LIGHTING CONTROL)
2. INSTALL DEPARTMENT FURNISHED MODEL 2070 CONTROLLER ASSEMBLY WITH TYPE 332 CABINET AND BATTERY BACKUP SYSTEM. REFER TO SHEETS E-20, E-21 AND E-22 FOR DETAILS.
3. INSTALL VIVDS CAMRERA PER ES-7R, DETAIL A.
4. INSTALL VIVDS CAMRERA PER ES-7R, DETAIL B.
5. EXISTING 1½"C, 2#6 (Sig), 2#10 (Lt g), 2#12 (IISNS), 1#8 (G)
   - RC 2#6 (Sig), 2#10 (Lt g), 2#12 (IISNS), 1#8 (G)
   - CC 1½"C, INSTALL 2#6 (Sig), 2#8 (Lt g), 1#6 (G)
6. 1½"C, 2#8 (Lt g), 1#8 (G)
7. FOR SIGN DETAILS AND STREET NAME SIGNS, SEE SQ-1 PLAN SHEET.
8. INSTALL LONG TERM EVOLUTION (LTE) MODEM IN CONTROLLER CABINET.
9. INSTALL VEHICLE SIGNAL FACE PER DETAIL 'C' SHOWN ON THIS SHEET.
10. RS EXISTING PEDESTRIAN PUSH BUTTON. INSTALL APS.
11. RS EXISTING PEDESTRIAN SIGNAL HEAD. INSTALL LED COUNTDOWN PEDESTRIAN SIGNAL FACE MODULE.
12. EXISTING 3"C, 3#2 (POWER FROM BVE). BVE SHALL CONNECT TO THIS EXISTING CONDUIT AND PROVIDE SERVICE EQUIPMENT ENCLOSURE WITH POWER.
13. REFER TO DETAIL 'D' ON THIS SHEET.
14. REFER TO DETAIL 'E' ON THIS SHEET.
15. REFER TO DETAIL 'F' ON THIS SHEET.
16. CONNECT APS CABLE (20#9) TO PED HEAD WITH SAME PHASE AND IN SAME INTERSECTION QUADRANT.

ABBREVIATIONS:

SCE	-	SOUTHERN CALIFORNIA EDISON
TC-1	-	SCE TRAFFIC CONTROL RATE
LS-3	-	SCE LIGHTING RATE

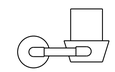

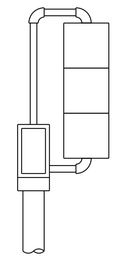

DETAIL 'D'
(MODIFIED TV-1-T)

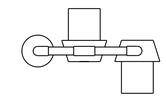

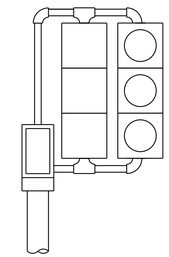

DETAIL 'E'
(MODIFIED TV-2-T)

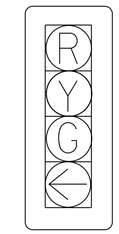

DETAIL 'C'

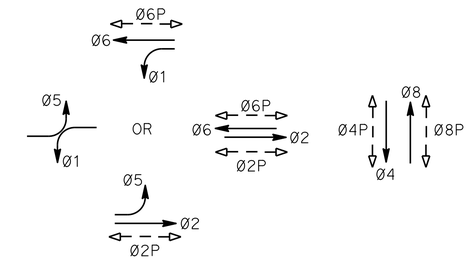

PHASE DIAGRAM
STEADY DEMAND SEQUENCE

POLE AND EQUIPMENT SCHEDULE

POLE	STANDARD TYPE	STANDARD SMA	STANDARD LMA	VEH SIG MTG MAST ARM	VEH SIG MTG POLE	PED SIG MTG	APS PPB Ø	APS PPB ARROW	LED LUM (W)	SPECIAL REQUIREMENTS
A	26-4-100	45'	15'	MAS MAS	SV-1-T	SP-1-T			165	INSTALL D3 SIGN (BIG BEAR BLVD). F=18 ft [7]
B	PPB						6	←		[15] [16]
C	PPB						8	→		[15] [16]
D	1-A				[14]	SP-1-T				
E	26-4-100	45'	15'	MAS MAS	SV-1-T	SP-1-T			165	INSTALL D3 SIGN (MOONRIDGE Rd). INSTALL EXISTING "NO U TURN" SIGN. F=20 ft [7]
F	PPB						8	←		[16]
G	PPB						2	→		[16]
H	1-A				[13]	SP-1-T				
*I	19-2-80	25'	15'	MAS	SV-1-T	SP-1-T	2	←	165	RC EXISTING Lum. INSTALL LED Lum. RC EXISTING IISNS. INSTALL D3 SIGN (BIG BEAR BLVD). [7] [16]
*J	1-A				TV-2-T	SP-1-T				
*K	26-4-80	45'	15'	MAS MAS	SV-1-T	SP-1-T			165	RC EXISTING Lum. INSTALL LED Lum. RC EXISTING IISNS. INSTALL D3 SIGN (GARSTIN Dr). [7]
*L	1-A				TV-1-T	SP-1-T	6	→		[16]

* EXISTING. TO REMAIN.

CONDUCTOR AND CONDUIT SCHEDULE

CABLE TYPE	POLE	PHASE	1	2	3	4	5	6	7	8
VEH-PED 12CSC	A	8,8P	1							
	B	6	1							
	C	8	1							
	D	5,6,6P	1	1						
	E	2,5,2P	1	1	1					
	F	8	1	1	1					
	G	2	1	1	1	1				
	H	4,8P	1	1	1	1				
	I	4 / 2	1 / 1				1 / 1	1 / 1		1 / 1
	J	1,2,2P	1					1		1
	K	1,6,6P	1							1
PPB 3CSC	L	8 / 6	1 / 1						1 / 1	
		TOTAL	8 / 6	3 / 2	2 / 2	1 / 1	1 / 1	2 / 1	1 / 1	3 / 1
AWG		CIRCUIT								
#8		LIGHTING		2	2		2	2		2
#8		GROUND	1	1	1	1	1	1	1	1
APS CABLE (20#9)				1		2	1		1	
VIVID POWER CABLE			4	2	2		1	1		2
VIVID VIDEO CABLE			4	2	2		1	1		2
CONDUIT SIZE			2-4"	3.5"	3"	2"	2.5"	3"	2"	3.5"

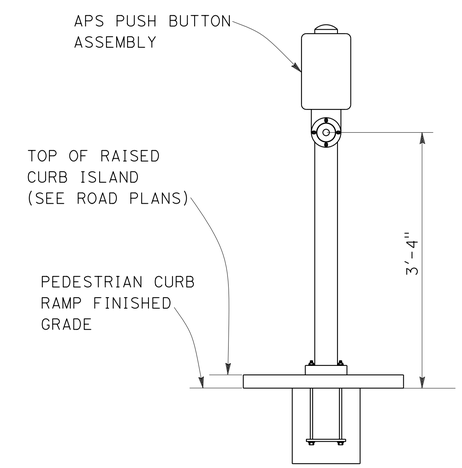

PUSH BUTTON ASSEMBLY POST
DETAIL "F"

4 **REPLACED PER ADDENDUM No. 4 DATED FEBRUARY 17, 2016**

APPROVED FOR ELECTRICAL WORK ONLY

MODIFY SIGNAL AND LIGHTING
(LOCATION 4)
SCALE 1" = 20'

E-12

STATE OF CALIFORNIA - DEPARTMENT OF TRANSPORTATION
Caltrans
ELECTRICAL DESIGN B

FUNCTIONAL SUPERVISOR: FERDINAND DE LA CRUZ
CALCULATED-DESIGNED BY: LUIS PENALOZA
CHECKED BY: FERDINAND DE LA CRUZ
REVISED BY / DATE REVISED

LAST REVISION 06-26-15 | DATE PLOTTED => 16-FEB-2016 | TIME PLOTTED => 15:44

Dist	COUNTY	ROUTE	POST MILES TOTAL PROJECT	SHEET No.	TOTAL SHEETS
08	SBd	18	49.0/51.7	136	179

4

REGISTERED CIVIL ENGINEER 6-26-15 DATE

6-26-15
PLANS APPROVAL DATE

REGISTERED PROFESSIONAL ENGINEER FERDINAND DE LA CRUZ No. 66070 Exp. 06-30-16 ELECTRICAL STATE OF CALIFORNIA

THE STATE OF CALIFORNIA OR ITS OFFICERS OR AGENTS SHALL NOT BE RESPONSIBLE FOR THE ACCURACY OR COMPLETENESS OF SCANNED COPIES OF THIS PLAN SHEET.

NOTES: (SHEET E-14 AND E-15 ONLY)

1. SEE SHEET E-15 FOR LEGEND AND SCHEDULES.
2. FOR ACCURATE RIGHT OF WAY DATA, CONTACT RIGHT OF WAY ENGINEERING AT THE DISTRICT OFFICE.
3. SEE ROADWAY CONSTRUCTION DETAILS FOR EXACT LOCATION OF SIGNAL AND LIGHTING STANDARDS AND PEDESTRIAN PUSH BUTTON POSTS.
4. SEE ROADWAY CONSTRUCTION DETAILS FOR CURB-MOUNTED PEDESTRIAN PUSHBUTTONS POSTS.

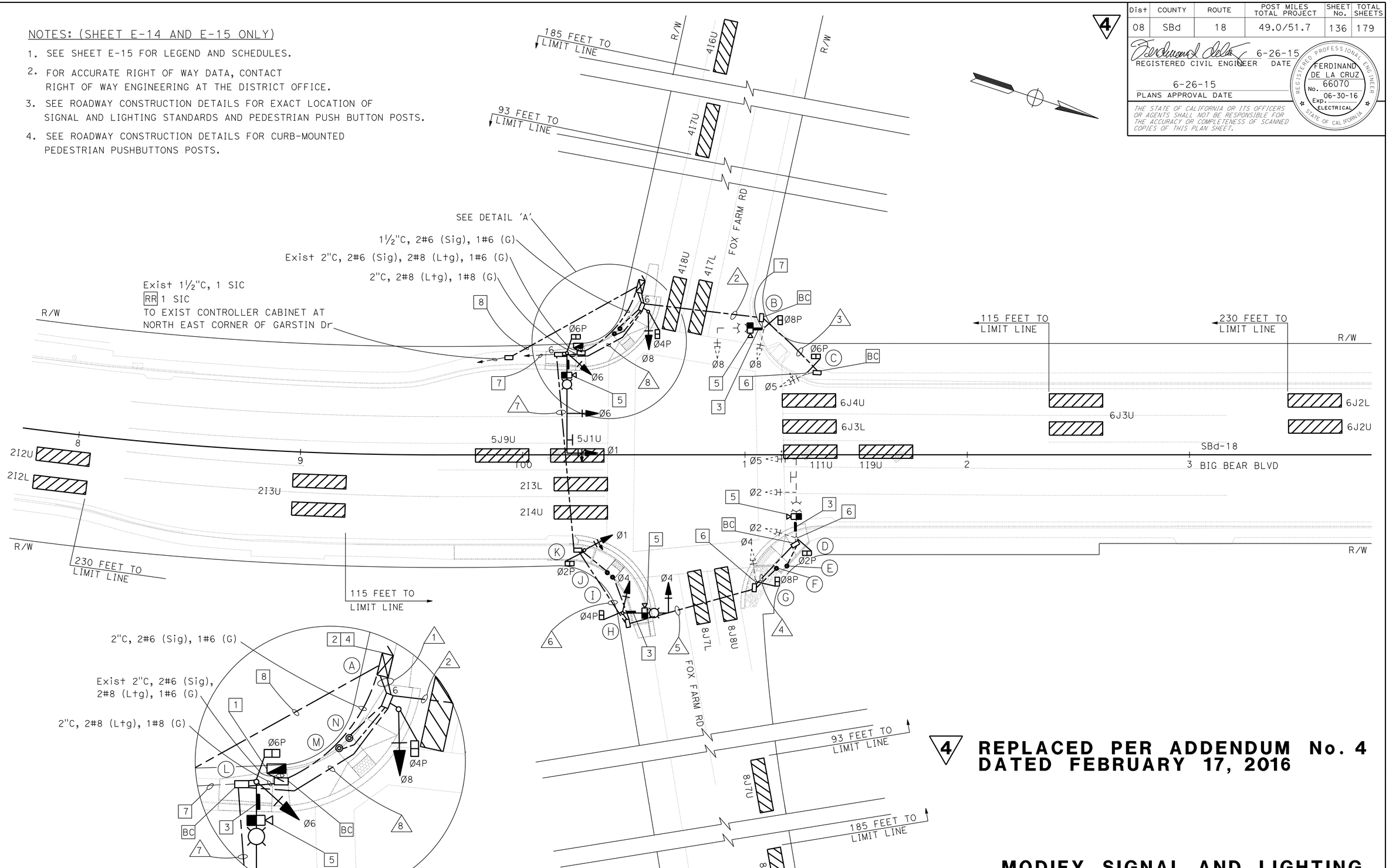

4 **REPLACED PER ADDENDUM No. 4 DATED FEBRUARY 17, 2016**

MODIFY SIGNAL AND LIGHTING
(LOCATION 5)

SCALE 1" = 20'

E-14

APPROVED FOR ELECTRICAL WORK ONLY

STATE OF CALIFORNIA - DEPARTMENT OF TRANSPORTATION
Caltrans®
ELECTRICAL DESIGN B

FUNCTIONAL SUPERVISOR: FERDINAND DE LA CRUZ
CALCULATED-DESIGNED BY: LUIS PENALOZA
CHECKED BY: FERDINAND DE LA CRUZ
REVISED BY
DATE REVISED

LAST REVISION 06-26-15
DATE PLOTTED => 16-FEB-2016
TIME PLOTTED => 15:44

Dist	COUNTY	ROUTE	POST MILES TOTAL PROJECT	SHEET No.	TOTAL SHEETS
08	SBd	18	49.0/51.7	137	179

REGISTERED CIVIL ENGINEER 6-26-15 DATE

6-26-15
PLANS APPROVAL DATE

REGISTERED PROFESSIONAL ENGINEER FERDINAND DE LA CRUZ No. 66070 Exp. 06-30-16 ELECTRICAL STATE OF CALIFORNIA

THE STATE OF CALIFORNIA OR ITS OFFICERS OR AGENTS SHALL NOT BE RESPONSIBLE FOR THE ACCURACY OR COMPLETENESS OF SCANNED COPIES OF THIS PLAN SHEET.

LEGEND: (SHEET E-14 AND E-15 ONLY)

1. INSTALL 120/240 V, 1Ø, 3 WIRE, TYPE III-CF SERVICE EQUIPMENT ENCLOSURE ON EXISTING FOUNDATION, WITH THE FOLLOWING CIRCUIT BREAKERS:
   - METER A: 100 A, 240 V, 2P, CB. MAIN BREAKER (TC-1)
     50 A, 120 V, 1P, CB. (SIGNALS)
   - METER B: 100 A, 240 V, 2P, CB. MAIN BREAKER (LS-3)
     30 A, 240 V, 2P, CB. (LIGHTING)
     15 A, 120 V, 1P, CB. (LIGHTING CONTROL)
2. INSTALL DEPARTMENT FURNISHED MODEL 2070 CONTROLLER ASSEMBLY WITH TYPE 332 CABINET AND BATTERY BACKUP SYSTEM. REFER TO SHEETS E-20, E-21 AND E-22 FOR DETAILS.
3. FOR SIGN DETAILS AND STREET NAME SIGNS, SEE SQ-1 PLAN SHEET.
4. INSTALL LONG TERM EVOLUTION (LTE) MODEM IN CONTROLLER CABINET.
5. INSTALL VIVDS CAMRERA PER ES-7R, DETAIL B.
6. RC EXISTING PEDESTRIAN SIGNAL HEAD. INSTALL LED COUNTDOWN PEDESTRIAN SIGNAL FACE MODULE.
7. EXISTING 3"C, 3#2 (POWER FROM BVE). BVE SHALL CONNECT TO THIS EXISTING CONDUIT AND PROVIDE SERVICE EQUIPMENT ENCLOSURE WITH POWER.
8. 1½"C, INSTALL EXISTING 1 SIC. CONDUIT SHOWN OUTSIDE OF CATRANS RIGHT OF WAY FOR DIAGRAMATICAL PURPOSES ONLY. CONDUIT MUST BE INSATLLED WITHIN CALTRANS RIGHT OR WAY.
9. REFER TO DETAIL 'D' ON THIS SHEET.
10. CONNECT APS CABLE (20#9) TO PED HEAD WITH SAME PHASE AND IN SAME INTERSECTION QUADRANT.
11. REFER TO DETAIL 'F' ON THIS SHEET.

ABBREVIATIONS:

BVE	-	BEAR VALLEY ELECTRIC
TC-1	-	SCE TRAFFIC CONTROL RATE
LS-3	-	SCE LIGHTING RATE

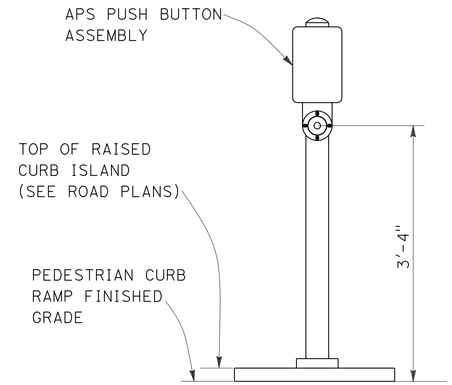

PUSH BUTTON ASSEMBLY POST
DETAIL "F"

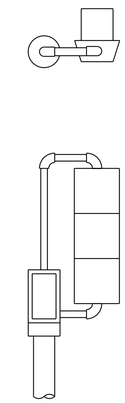

DETAIL 'D'
(MODIFIED TV-1-T)

POLE AND EQUIPMENT SCHEDULE

No.	STANDARD TYPE	STANDARD SMA	STANDARD LMA	VEH SIG MTG Mast Arm	VEH SIG MTG POLE	PED SIG Mtg	PPB Ø	PPB ARROW	LED LUM (W)	SPECIAL REQUIREMENTS
Ⓐ	1-A				9	SP-1-T				
Ⓑ	* 17-2-80	30'	12'	MAS	SV-1-T	SP-1-T	6	←	165	RC EXISTING IISNS. INSTALL D3 SIGN (BIG BEAR BLVD) 3 RC EXISTING Lum. INSTALL LED Lum. 10
Ⓒ	* 1-A				TV-1-T	SP-1-T	8	→		10
Ⓓ	* 24-4-80	35'	12'	MAS MAS	SV-1-T	SP-1-T			165	RC EXISTING IISNS. INSTALL D3 SIGN (FOX FARM Rd) RC EXISTING Lum. INSTALL LED Lum. 3
Ⓔ	PPB POST						8	←		10 11
Ⓕ	PPB POST						2	→		10 11
Ⓖ	* 1-A				TV-1-T	SP-1-T				
Ⓗ	17-3-100	20'	12'	MAS	SV-1-T	SP-1-T			165	INSTALL D3 SIGN (BIG BEAR BLVD) 3
Ⓘ	PPB POST						2	←		10 11
Ⓙ	PPB POST						4	→		10 11
Ⓚ	1-A				9	SP-1-T				
Ⓛ	26-4-100	45'	12'	MAS MAS	SV-1-T	SP-1-T			165	INSTALL D3 SIGN (FOX FARM Rd) INSTALL EXISTING "NO U TURN" SIGN. F=17 ft 3
Ⓜ	PPB POST						4	←		10 11
Ⓝ	PPB POST						6	→		10 11

* EXISTING EQUIPMENT TO REMAIN.

CONDUCTOR AND CONDUIT SCHEDULE

CABLE SCHEDULE			CONDUIT RUN AND SIZE							
CABLE TYPE	POLE	PHASE	1	2	3	4	5	6	7	8
VEH-PED 12CSC	Ⓐ	8,4P / 6	1 / 1							
	Ⓑ	8,8P / 8	1 / 1	1 / 1						
	Ⓒ	5,6P	1	1	1					
	Ⓓ	2,5,2P	1			1	1	1	1	1
	Ⓔ	/ 8	1			1	1	1	1	1
	Ⓕ	/ 2	1				1	1	1	1
	Ⓖ	4,8P	1				1	1	1	1
	Ⓗ	4,4P	1					1	1	1
	Ⓘ	/ 2	1						1	1
	Ⓙ	/ 4	1						1	1
	Ⓚ	1,2P	1						1	1
	Ⓛ	1,6,6P	1							1
	Ⓜ	/ 4	1							
	Ⓝ	/ 6	1							
PPB 3CSC		TOTAL	8 / 8	2 / 2	1 / 0	1 / 1	2 / 2	3 / 2	4 / 4	5 / 4
AWG		CIRCUIT								
#8		LIGHTING		2		2	2	2	2	2
#8		GROUND	1	1	1	1	1	1	1	1
APS CABLE (20#9)					2	2		2		1
VIVID POWER CABLE			4	1		1	1	2	2	3
VIVID VIDEO CABLE			4	1		1	1	2	2	3
CONDUIT SIZE			2-4"	3"	2"	2.5"	3"	3.5"	4"	4"

4 **REPLACED PER ADDENDUM No. 4 DATED FEBRUARY 17, 2016**

APPROVED FOR ELECTRICAL WORK ONLY

MODIFY SIGNAL AND LIGHTING
(LOCATION 5)
SCALE 1" = 20'

E-15

REVISED BY	DATE REVISED

LUIS PENALOZA — FERDINAND DE LA CRUZ — CALCULATED-DESIGNED BY — CHECKED BY
FUNCTIONAL SUPERVISOR — FERDINAND DE LA CRUZ
STATE OF CALIFORNIA - DEPARTMENT OF TRANSPORTATION — Caltrans — ELECTRICAL DESIGN B

LAST REVISION 06-26-15 — DATE PLOTTED => 16-FEB-2016 — TIME PLOTTED => 15:44

Dist	COUNTY	ROUTE	POST MILES TOTAL PROJECT	SHEET No.	TOTAL SHEETS
08	SBd	18	49.0/51.7	139	179

4

REGISTERED CIVIL ENGINEER 6-26-15 DATE

6-26-15
PLANS APPROVAL DATE

REGISTERED PROFESSIONAL ENGINEER FERDINAND DE LA CRUZ No. 66070 Exp. 06-30-16 ELECTRICAL STATE OF CALIFORNIA

THE STATE OF CALIFORNIA OR ITS OFFICERS OR AGENTS SHALL NOT BE RESPONSIBLE FOR THE ACCURACY OR COMPLETENESS OF SCANNED COPIES OF THIS PLAN SHEET.

NOTES: (SHEET E-17 AND E-18 ONLY)

1. SEE SHEET E-18 FOR LEGEND AND SCHEDULES.
2. FOR ACCURATE RIGHT OF WAY DATA, CONTACT RIGHT OF WAY ENGINEERING AT THE DISTRICT OFFICE.
3. SEE ROADWAY CONSTRUCTION DETAILS FOR EXACT LOCATION OF SIGNAL AND LIGHTING STANDARDS AND PEDESTRIAN PUSH BUTTON POSTS.

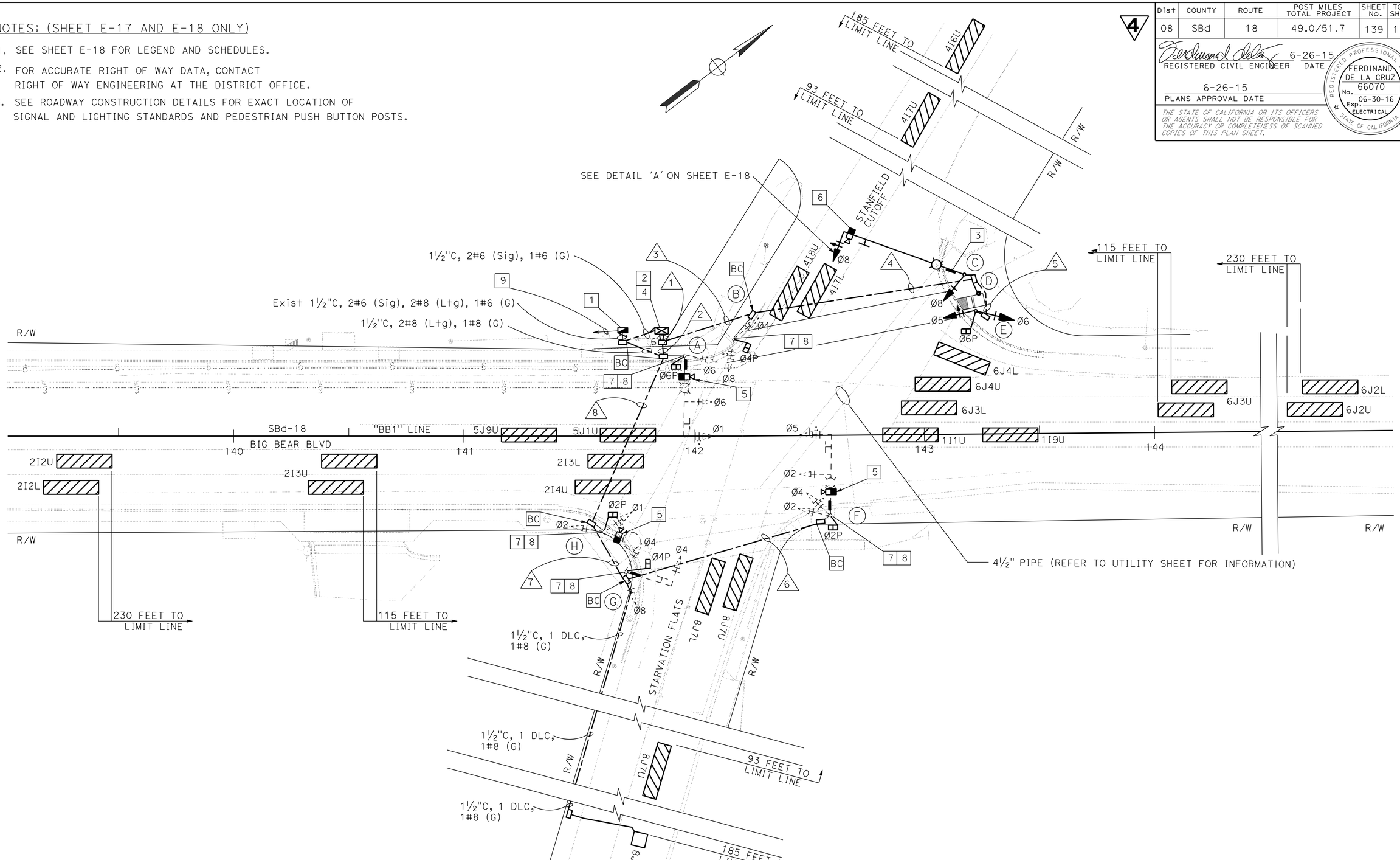

4 **REPLACED PER ADDENDUM No. 4 DATED FEBRUARY 17, 2016**

APPROVED FOR ELECTRICAL WORK ONLY

MODIFY SIGNAL AND LIGHTING
(LOCATION 6)
SCALE 1" = 20'

E-17

STATE OF CALIFORNIA - DEPARTMENT OF TRANSPORTATION
Caltrans®
ELECTRICAL DESIGN B

FUNCTIONAL SUPERVISOR: FERDINAND DE LA CRUZ
CALCULATED-DESIGNED BY: LUIS PENALOZA
CHECKED BY: FERDINAND DE LA CRUZ
REVISED BY
DATE REVISED

LAST REVISION 06-26-15
DATE PLOTTED => 16-FEB-2016
TIME PLOTTED => 15:44

Dist	COUNTY	ROUTE	POST MILES TOTAL PROJECT	SHEET No.	TOTAL SHEETS
08	SBd	18	49.0/51.7	140	179

4

REGISTERED CIVIL ENGINEER 6-26-15 DATE

6-26-15
PLANS APPROVAL DATE

REGISTERED PROFESSIONAL ENGINEER FERDINAND DE LA CRUZ No. 66070 Exp. 06-30-16 ELECTRICAL STATE OF CALIFORNIA

THE STATE OF CALIFORNIA OR ITS OFFICERS OR AGENTS SHALL NOT BE RESPONSIBLE FOR THE ACCURACY OR COMPLETENESS OF SCANNED COPIES OF THIS PLAN SHEET.

LEGEND (SHEET E-17 AND E-18 ONLY):

1. INSTALL 120/240 V, 1Ø, 3 WIRE, TYPE III-CF SERVICE EQUIPMENT ENCLOSURE ON EXISTING FOUNDATION, WITH THE FOLLOWING CIRCUIT BREAKERS:
   METER A: 100 A, 240 V, 2P, CB. MAIN BREAKER (TC-1)
   50 A, 120 V, 1P, CB. (SIGNAL)
   METER B: 100 A, 240 V, 2P, CB. MAIN BREAKER (LS-3)
   30 A, 240 V, 2P, CB. (LIGHTING)
   15 A, 120 V, 1P, CB. (LIGHTING CONTROL)
2. INSTALL DEPARTMENT FURNISHED MODEL 2070 CONTROLLER ASSEMBLY WITH TYPE 332 CABINET AND BATTERY BACKUP SYSTEM. REFER TO SHEETS E-20, E-21 AND E-22 FOR DETAILS.
3. FOR SIGN DETAILS AND STREET NAME SIGNS, SEE SQ-1 PLAN SHEET.
4. INSTALL LONG TERM EVOLUTION (LTE) MODEM IN CONTROLLER CABINET.
5. INSTALL VIVDS CAMRERA PER ES-7R, DETAIL B.
6. INSTALL VIVDS CAMRERA PER ES-7R, DETAIL A.
7. RC EXISTING PEDESTRIAN PUSH BUTTON. INSTALL APS.
8. RC EXISTING PEDESTRIAN SIGNAL HEAD. INSTALL LED COUNTDOWN PEDESTRIAN SIGNAL FACE MODULE.
9. EXISTING 3"C, 3#2 (POWER FROM BVE). BVE SHALL CONNECT TO THIS EXISTING CONDUIT AND PROVIDE SERVICE EQUIPMENT ENCLOSURE WITH POWER.
10. REFER TO DETAIL 'E' ON THIS SHEET.
11. CONNECT APS CABLE (20#9) TO PED HEAD WITH SAME PHASE AND IN SAME INTERSECTION QUADRANT.

ABBREVIATIONS:

BVE	-	BEAR VALLEY ELECTRIC
TC-1	-	SCE TRAFFIC CONTROL RATE
LS-3	-	SCE LIGHTING RATE

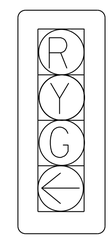

DETAIL 'A'

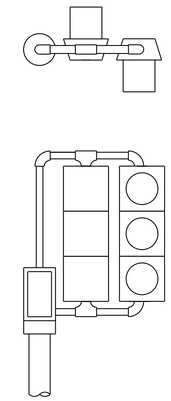

DETAIL 'E'
(MODIFIED TV-2-T)

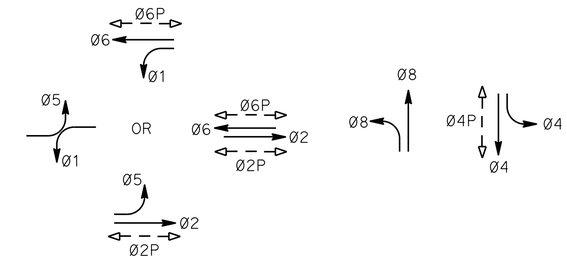

PHASE DIAGRAM
STEADY DEMAND SEQUENCE

CONDUCTOR AND CONDUIT SCHEDULE

CABLE SCHEDULE			CONDUIT RUN AND SIZE							
CABLE TYPE	POLE	PHASE	1	2	3	4	5	6	7	8
VEH-PED 12CSC	Ⓐ	1,6,6P / 4	1 / 1	1 / 1						
	Ⓑ	4,8,4P / 6	2 / 1		2 / 1					
	Ⓒ	8	1		1	1				
	Ⓓ	6	1		1	1				
	Ⓔ	5,6,6P	1		1	1	1			
	Ⓕ	2,4,5,2P / 2	2 / 1	2 / 1				2 / 1	2 / 1	2 / 1
	Ⓖ	4,8,4P / 2	2 / 1	2 / 1					2 / 1	2 / 1
	Ⓗ	1,2,2P / 4	1 / 1	1 / 1						1 / 1
PPB 3CSC		TOTAL	9 / 6	5 / 4	4 / 2	2 / 1	1 / 0	2 / 1	3 / 2	4 / 3
AWG		CIRCUIT								
#8		LIGHTING		2	2	2		2	2	2
#8		GROUND	1	1	1	1	1	1	1	1
APS CABLE (20#9)				2	2		1		2	
VIVID POWER CABLE			4	3	1	1		1	1	2
VIVID VIDEO CABLE			4	3	1	1		1	1	2
DETECTORS-TYPE B DLC										
PHASE										
Ø8			1	1					1	1
TOTAL			1	1					1	1
CONDUIT SIZE			2-4"	4"	3.5"	3"	2"	3"	3.5"	4"

POLE and EQUIPMENT SCHEDULE

No.	STANDARD TYPE	SMA	LMA	VEH SIG MTG Mast Arm	VEH SIG MTG POLE	PED SIG Mtg	PPB Ø	PPB ARROW	LED LUM (W)	SPECIAL REQUIREMENTS
Ⓐ	* 23-4-80	35'	12'	MAS MAS	SV-1-T	**SP-1-T**	**4**	←	**165**	RC EXISTING IISNS. INSTALL D3 SIGN (STANFIELD CUTOFF) RC EXISTING Lum. INSTALL LED Lum. 3 11
Ⓑ	* 1-A				TV-2-T	**SP-1-T**	**6**	→		11
Ⓒ	**29-5-100**	**55'**	**15'**	**MAS**	**SV-1-T**				**165**	INSTALL D3 SIGN (BIG BEAR BLVD) INSTALL EXISTING "NO U TURN" SIGN. 3
Ⓓ	**PPB POST**						**6**	←		11
Ⓔ	**1-A**				10	**SP-1-T**				
Ⓕ	* 23-4-80	35'	12'	MAS MAS	SV-2-T	**SP-1-T**	**2**	←		RC EXISTING IISNS. INSTALL D3 SIGN (STARVATION FLATS) RC EXISTING Lum. INSTALL LED Lum. 3 11
Ⓖ	* 17-3-100	20'		MAS	SV-2-T	**SP-1-T**	**2**	←		RC EXISTING IISNS. INSTALL D3 SIGN (BIG BEAR BLVD) 3 11
Ⓗ	* 15-TS		15'		SV-2-T	**SP-1-T**	**4**	→	**165**	RC EXISTING Lum. INSTALL LED Lum. 11

* EXISTING. TO REMAIN.

4 **REPLACED PER ADDENDUM No. 4 DATED FEBRUARY 17, 2016**

APPROVED FOR ELECTRICAL WORK ONLY

MODIFY SIGNAL AND LIGHTING
(LOCATION 6)
SCALE 1" = 20'

E-18

STATE OF CALIFORNIA - DEPARTMENT OF TRANSPORTATION
Caltrans®
ELECTRICAL DESIGN B
FUNCTIONAL SUPERVISOR: FERDINAND DE LA CRUZ
CALCULATED-DESIGNED BY: LUIS PENALOZA
CHECKED BY: FERDINAND DE LA CRUZ
REVISED BY
DATE REVISED

LAST REVISION 06-26-15
DATE PLOTTED => 16-FEB-2016
TIME PLOTTED => 15:44

4

REGISTERED CIVIL ENGINEER 6-26-15 DATE

6-26-15
PLANS APPROVAL DATE

REGISTERED PROFESSIONAL ENGINEER FERDINAND DE LA CRUZ No. 66070 Exp. 06-30-16 ELECTRICAL STATE OF CALIFORNIA

THE STATE OF CALIFORNIA OR ITS OFFICERS OR AGENTS SHALL NOT BE RESPONSIBLE FOR THE ACCURACY OR COMPLETENESS OF SCANNED COPIES OF THIS PLAN SHEET.

NOTE:

1. THE QUANTITIES SHOWN IN TABLES ARE NOT SEPARATE PAY ITEMS, FOR INFORMATION ONLY. FOR COMPLETE ELECTRICAL WORK, SEE ELECTRICAL PLAN SHEETS.

MODIFY SIGNAL AND LIGHTING (LOCATIONS)

LOCATION	SHEET No.	1.5 "C TYPE 3	2 "C TYPE 3	2.5"C TYPE 3	3"C TYPE 3	3.5"C TYPE 3	4"C TYPE 3	No. 5 PB	No. 6 PB	No. 6 (G)	No. 8 (G)	No. 6 CONDUCTOR	No. 8 CONDUCTOR	SIC	3 CSC CABLE	12 CSC CABLE	DLC CABLE	VIVIDS POWER CABLE	VIVIDS VIDEO CABLE	TYPE E LOOPS	APS CABLE
		LF	LF	LF	LF	LF	LF	EA	EA	LF	LF	LF	LF	LF	LF	LF	LF	LF	LF	EA	LF
1	E-2	100	90	0	110	30	150	6	2	40	350	80	950	50	1,100	1,400	0	550	550	0	400
2	E-5	20	80	60	50	100	300	4	2	20	530	40	750	40	1,250	1,650	250	700	700	2	300
3	E-8	80	300	0	180	100	120	13	1	150	650	300	540	0	1,000	1,200	0	550	550	0	800
4	E-11	100	80	30	200	150	50	6	2	20	450	40	750	0	600	1,000	0	660	660	0	400
5	E-14	120	50	50	150	50	180	9	2	60	450	120	760	0	1,200	1,300	0	700	700	0	600
6	E-17	250	50	0	200	100	120	9	1	30	650	60	860	0	760	1,300	350	550	550	1	100

MODIFY SIGNAL AND LIGHTING (LOCATIONS)

LOCATION	SHEET No.	TYPE III-CF SERVICE EQUIPMENT ENCLOSURE	MODEL 332 CABINET	MODEL 332 CABINET FOUNDATION	BATTERY BACK-UP SYSTEM	PPB POST	1-A POLE	17-3-100 POLE	19-3-100 POLE	26-4-100 POLE	29-5-100 POLE	FOUNDATION PPB POST	FOUNDATION 1-A POLE	STANDARD FOUNDATION CASE 3	STANDARD FOUNDATION CASE 4	STANDARD FOUNDATION CASE 5
		EA	EA	EA	EA	EA	EA	EA	EA	EA	EA	EA	EA	EA	EA	EA
1	E-2	1	1	1	1	4	2	1	0	1	0	2	2	1	1	0
2	E-5	1	1	1	1	3	3	1	1	0	0	2	3	2	0	0
3	E-8	1	1	1	1	8	4	2	0	2	0	5	4	2	2	0
4	E-11	1	1	1	1	4	1	0	0	2	0	3	1	0	2	0
5	E-14	1	1	1	1	6	2	1	0	1	0	4	2	1	1	0
6	E-17	1	1	1	1	1	1	0	0	0	1	2	1	0	0	1

REPLACE PULL BOX

SHEET No.	No. 5 PULL BOX
	EA
E-19	38

4 **REPLACED PER ADDENDUM No. 4 DATED FEBRUARY 17, 2016**

APPROVED FOR ELECTRICAL WORK ONLY

ELECTRICAL QUANTITIES
E-23

REVISED BY | DATE REVISED
LUIS PENALOZA | FERDINAND DE LA CRUZ
CALCULATED-DESIGNED BY | CHECKED BY
FUNCTIONAL SUPERVISOR | FERDINAND DE LA CRUZ
STATE OF CALIFORNIA - DEPARTMENT OF TRANSPORTATION
Caltrans® ELECTRICAL DESIGN B

LAST REVISION 06-26-15 | DATE PLOTTED => 16-FEB-2016 TIME PLOTTED => 15:44

Dist	COUNTY	ROUTE	POST MILES TOTAL PROJECT	SHEET No.	TOTAL SHEETS
08	SBd	18	49.0/51.7	157	179

Theresa Gabriel
REGISTERED ELECTRICAL ENGINEER

October 30, 2015
PLANS APPROVAL DATE

REGISTERED PROFESSIONAL ENGINEER Theresa Aziz Gabriel No. E15129 Exp. 6-30-16 ELECTRICAL STATE OF CALIFORNIA

THE STATE OF CALIFORNIA OR ITS OFFICERS OR AGENTS SHALL NOT BE RESPONSIBLE FOR THE ACCURACY OR COMPLETENESS OF SCANNED COPIES OF THIS PLAN SHEET.

TO ACCOMPANY PLANS DATED 6-26-15

LEGEND:

- AB — ABANDON. IF APPLIED TO CONDUIT, REMOVE CONDUCTORS
- BC — INSTALL PULL BOX IN EXISTING CONDUIT RUN
- BP — PEDESTRIAN BARRICADE, TYPE AS INDICATED ON PLAN
- CB — INSTALL CONDUIT INTO EXISTING PULL BOX
- CC — CONNECT NEW AND EXISTING CONDUIT. REMOVE EXISTING CONDUCTORS AND INSTALL CONDUCTORS AS INDICATED
- CF — CONDUIT TO REMAIN FOR FUTURE USE. REMOVE CONDUCTORS. INSTALL PULL TAPE
- DH — DETECTOR HANDHOLE
- FA — FOUNDATION TO BE ABANDONED
- IS — INSTALL SIGN ON SIGNAL MAST ARM
- NS — NO SLIP BASE ON STANDARD
- PEC — PHOTOELECTRIC CONTROL
- PEU — PHOTOELECTRIC UNIT
- RC — EQUIPMENT OR MATERIAL TO BE REMOVED AND BECOME THE PROPERTY OF THE CONTRACTOR
- RE — REMOVE ELECTROLIER, FUSES AND BALLAST. TAPE ENDS OF CONDUCTORS
- RL — RELOCATE EQUIPMENT
- RR — REMOVE AND REUSE EQUIPMENT
- RS — REMOVE AND SALVAGE EQUIPMENT
- SC — SPLICE NEW TO EXISTING CONDUCTORS
- SD — SERVICE DISCONNECT
- TSP — TELEPHONE SERVICE POINT

ABBREVIATIONS

AC+	UNDERGROUNDED CONDUCTOR
APS	ACCESSIBLE PEDESTRIAN SIGNAL
Batt	BATTERY
BBS	BATTERY BACKUP SYSTEM
BC	BOLT CIRCLE
Blk	BLACK
BP	BYPASS
BPB	BICYCLE PUSH BUTTON
C	CONDUIT
CB	CIRCUIT BREAKER
CCTV	CLOSED CIRCUIT TELEVISION
Ckt	CIRCUIT
CMS	CHANGEABLE MESSAGE SIGN
Ctid	CALTRANS IDENTIFICATION
Comm	COMMUNICATION
Cntl	CONTROL
DF	DEPARTMENT-FURNISHED
DLC	LOOP DETECTOR LEAD-IN CABLE
EMS	EXTINGUISHABLE MESSAGE SIGN
EVUC	EMERGENCY VEHICLE UNIT CABLE
EVUD	EMERGENCY VEHICLE UNIT DETECTOR
FB	FLASHING BEACON
FBCA	FLASHING BEACON CONTROL ASSEMBLY
FBS	FLASHING BEACON WITH SLIP BASE
FO	FIBER OPTIC
G	EQUIPMENT GROUNDING CONDUCTOR
GB	GROUND BUS
GFCI	GROUND FAULT CIRCUIT INTERRUPTER
Grn	GREEN
HAR	HIGHWAY ADVISORY RADIO
Hex	HEXAGONAL
HPS	HIGH PRESSURE SODIUM
IISNS	INTERNALLY ILLUMINATED STREET NAME SIGN
ISL	INDUCTION SIGN LIGHTING
LED	LIGHT EMITTING DIODE
LMA	LUMINAIRE MAST ARM
LPS	LOW PRESSURE SODIUM
Ltg	LIGHTING
Lum	LUMINAIRE
M	METERED
MAT	MAST ARM MOUNTING TOP ATTACHMENT
MAS	MAST ARM MOUNTING SIDE ATTACHMENT
MBPS	MANUAL BYPASS SWITCH
M/M	MULTIPLE TO MULTIPLE TRANSFORMER
Mtg	MOUNTING
MV	MERCURY VAPOR LIGHTING FIXTURE
MVDS	MICROWAVE VEHICLE DETECTION SYSTEM
N	NEUTRAL (GROUNDED CONDUCTOR)
NB	NEUTRAL BUS
NC	NORMALLY CLOSE
NO	NORMALLY OPEN
P	CIRCUIT BREAKER'S POLE
PB	PULL BOX
PBA	PUSH BUTTON ASSEMBLY
PEC	PHOTOELECTRIC CONTROL
Ped	PEDESTRIAN
PEU	PHOTOELECTRIC UNIT
PT	CONDUIT WITH PULL TAPE
PTR	POWER TRANSFER RELAY
RE	RELOCATED EQUIPMENT
RM	RAMP METERING
RWIS	ROADSIDE WEATHER INFORMATION SYSTEM
SB	SLIP BASE
SIC	SIGNAL INTERCONNECT CABLE
Sig	SIGNAL
SMA	SIGNAL MAST ARM
SNS	STREET NAME SIGN
SP	SERVICE POINT
TB	TERMINAL BOARD
TDC	TELEPHONE DEMARCATION CABINET
Temp	TEMPERATURE
TMS	TRAFFIC MONITORING STATION
TOS	TRAFFIC OPERATIONS SYSTEM
UPS	UNINTERRUPTABLE POWER SUPPLY
UPSC	UNINTERRUPTABLE POWER SUPPLY CONTROLLER
Veh	VEHICLE
VIVDS	VIDEO IMAGE VEHICLE DETECTION SYSTEM
Wht	WHITE
WIM	WEIGH-IN-MOTION
Xfmr	TRANSFORMER

SOFFIT AND WALL-MOUNTED LUMINAIRES

- PENDANT SOFFIT LUMINAIRE, 70 W HPS UNLESS OTHERWISE SPECIFIED
- FLUSH-MOUNTED SOFFIT LUMINAIRE, 70 W HPS UNLESS OTHERWISE SPECIFIED
- WALL-MOUNTED LUMINAIRE, 70 W HPS UNLESS OTHERWISE SPECIFIED
- EXISTING SOFFIT OR WALL-MOUNTED LUMINAIRE TO REMAIN UNMODIFIED
- (M) EXISTING SOFFIT OR WALL-MOUNTED LUMINAIRE TO BE MODIFIED AS SPECIFIED

NOTE:
Arrow indicates "street side" of luminaire.

COMMONLY USED SYMBOLS FOR UNITED STATES CUSTOMARY UNITS OF MEASUREMENT:

SYMBOL	DEFINITIONS
Ω	OHMS
min	MINUTE
s	SECOND
bps	BITS PER SECOND
Bps	BYTES PER SECOND
A	AMPERE
V	VOLT
$V_{(dc)}$	VOLT (DIRECT CURRENT)
$V_{(ac)}$	VOLT (ALTERNATING CURRENT)
FC	FOOT - CANDLE
W	WATTS
VA	VOLT-AMPERE
M	MEGA
k	KILO
m	MILLI
μ	MICRO
P	PICO
Hz	HERTZ

MISCELLANEOUS ELECTROLIERS

NEW	EXISTING	
		LUMINAIRE ON WOOD POLE
		NON-STANDARD ELECTROLIER (SEE PROJECT LEGEND)
		CITY ELECTROLIER
		ELECTROLIER FOUNDATION (FUTURE INSTALLATION)

NOTES:

1. LED luminaires shall be 235 W when installed on Type 21, 21D, 30, 31 and 32 Standards, unless otherwise specified. LED luminaires shall be 165 W when installed on other type standards or poles, unless otherwise specified.
2. Luminaires shall be the cutoff type, ANSI Type III medium cutoff lighting distribution, unless otherwise specified.

STANDARD ELECTROLIER

NEW	EXISTING	STANDARD TYPE
		15
		15D
		15 STRUCTURE
		15D STRUCTURE
		21
		21D
		21 STRUCTURE
		21D STRUCTURE
		30
		31
		32

STATE OF CALIFORNIA
DEPARTMENT OF TRANSPORTATION

ELECTRICAL SYSTEMS (LEGEND AND ABBREVIATIONS)

NO SCALE

RSP ES-1A DATED OCTOBER 30, 2015 SUPERSEDES RSP ES-1A DATED JULY 19, 2013 AND STANDARD PLAN ES-1A DATED MAY 20, 2011 - PAGE 425 OF THE STANDARD PLANS BOOK DATED 2010.

REVISED STANDARD PLAN RSP ES-1A

4 REPLACED PER ADDENDUM No. 4 DATED FEBRUARY 17, 2016

2010 REVISED STANDARD PLAN RSP ES-1A

9-29-15

Dist	COUNTY	ROUTE	POST MILES TOTAL PROJECT	SHEET No.	TOTAL SHEETS
08	SBd	18	49.0/51.7	158	179

4

Theresa Gabriel
REGISTERED ELECTRICAL ENGINEER

October 30, 2015
PLANS APPROVAL DATE

REGISTERED PROFESSIONAL ENGINEER
Theresa Aziz Gabriel
No. E15129
Exp. 6-30-16
ELECTRICAL
STATE OF CALIFORNIA

THE STATE OF CALIFORNIA OR ITS OFFICERS OR AGENTS SHALL NOT BE RESPONSIBLE FOR THE ACCURACY OR COMPLETENESS OF SCANNED COPIES OF THIS PLAN SHEET.

TO ACCOMPANY PLANS DATED 6-26-15

CONDUIT

NEW	EXISTING	
		LIGHTING CONDUIT, UNLESS OTHERWISE INDICATED OR NOTED
		TRAFFIC SIGNAL CONDUIT
C	c	COMMUNICATION CONDUIT
T	t	TELEPHONE CONDUIT
F	f	FIRE ALARM CONDUIT
FO	fo	FIBER OPTIC CONDUIT
		CONDUIT TERMINATION
R	r	CONDUIT RISER ATTACHED TO THE STRUCTURE OR SERVICE POLE

SERVICE EQUIPMENT

NEW	EXISTING	
OH	oh	OVERHEAD LINES
U	U	WOOD POLE, "U" INDICATES UTILITY OWNED
		POLE GUY WITH ANCHOR
		UTILITY TRANSFORMER - GROUND MOUNTED
III	III	SERVICE EQUIPMENT ENCLOSURE TYPE. DOOR INDICATES FRONT OF ENCLOSURE
T	t	TELEPHONE DEMARCATION CABINET

POLE-MOUNTED SERVICE DESIGNATION

TYPE H SERVICE, 28'-10" — TYPE OF INSTALLATION AND POLE HEIGHT ABOVE GRADE

FLASHING BEACON

NEW	EXISTING	
R	R	FLASHING BEACON (ONE VEHICLE SIGNAL HEAD WITH BACKPLATE AND VISOR) "R" INDICATES RED INDICATION, "Y" INDICATES YELLOW INDICATION
Y Y	Y Y	FLASHING BEACON WITH TYPE 15-FBS STANDARD AND A SIGN.
R R	R R	FLASHING BEACON WITH TYPES 9, 9A OR 9B SIGN UNLESS OTHERWISE SPECIFIED OR INDICATED

SIGNAL EQUIPMENT

NEW	EXISTING	
		PEDESTRIAN SIGNAL HEAD
		PUSH BUTTON ASSEMBLY POST
		PEDESTRIAN BARRICADE
		VEHICLE SIGNAL HEAD (WITH BACKPLATE AND 3-SECTIONS: RED, YELLOW AND GREEN)
		VEHICLE SIGNAL HEAD WITH ANGLE VISOR
PV	PV	MODIFICATIONS OF BASIC SYMBOL: "L" INDICATES ALL NON-ARROW SECTIONS LOUVERED "LG" INDICATES LOUVERED GREEN SECTION ONLY "PV" INDICATES ALL 12" SECTIONS PROGRAMMED VISIBILITY "8" INDICATES ALL 8" SECTIONS (ONLY WHEN SPECIFIED)
		VEHICLE SIGNAL HEAD CONSISTING OF RED, YELLOW AND GREEN LEFT ARROW SECTIONS
		VEHICLE SIGNAL HEAD CONSISTING OF RED AND YELLOW SECTIONS WITH AN UP GREEN ARROW SECTION
		VEHICLE SIGNAL HEAD (5 SECTION) CONSISTING OF RED, YELLOW AND GREEN SECTIONS WITH YELLOW AND GREEN RIGHT ARROW SECTIONS
		TYPE 15TS STANDARD WITH VEHICLE SIGNAL HEAD AND LUMINAIRE
		TYPE 21TS STANDARD WITH VEHICLE SIGNAL HEAD AND LUMINAIRE
		STANDARD WITH LUMINAIRE AND SIGNAL MAST ARMS AND ATTACHED VEHICLE SIGNAL HEADS
		TYPE 1 STANDARD WITH ATTACHED VEHICLE SIGNAL HEADS
		STANDARD WITH A SIGNAL MAST ARM, ATTACHED VEHICLE SIGNAL HEADS AND INTERNALLY ILLUMINATED STREET NAME SIGN
		CONTROLLER ASSEMBLY. DOOR INDICATES FRONT OF CABINET

SIGNAL EQUIPMENT Cont

NEW	EXISTING	
		GUARD POST
		TYPE 1 STANDARD WITH RAMP METERING SIGN
		OPTICAL DETECTOR FOR THE EMERGENCY VEHICLE DETECTION

NOTES:

1. All signal sections shall be 12" unless shown otherwise.
2. Signal heads shall be provided with backplates unless shown otherwise.

ILLUMINATED OVERHEAD SIGN

NEW	EXISTING	
		SINGLE POST, SINGLE ILLUMINATED SIGN, BALANCED BUTTERFLY
		SINGLE POST, DOUBLE ILLUMINATED SIGN, BALANCED BUTTERFLY
		SINGLE POST, SINGLE ILLUMINATED SIGN, FULL CANTILEVER
		DOUBLE POST, SINGLE ILLUMINATED SIGN
		SINGLE ILLUMINATED SIGN MOUNTED ON STRUCTURE
		DOUBLE POST, SINGLE ILLUMINATED SIGN WITH ELECTROLIER

4 REPLACED PER ADDENDUM No. 4 DATED FEBRUARY 17, 2016

STATE OF CALIFORNIA
DEPARTMENT OF TRANSPORTATION

ELECTRICAL SYSTEMS (LEGEND AND ABBREVIATIONS)

NO SCALE

RSP ES-1B DATED OCTOBER 30, 2015 SUPERSEDES RSP ES-1B DATED JULY 19, 2013 AND STANDARD PLAN ES-1B DATED MAY 20, 2011 - PAGE 426 OF THE STANDARD PLANS BOOK DATED 2010.

REVISED STANDARD PLAN RSP ES-1B

2010 REVISED STANDARD PLAN RSP ES-1B

8-19-15

Dist	COUNTY	ROUTE	POST MILES TOTAL PROJECT	SHEET No.	TOTAL SHEETS
08	SBd	18	49.0/51.7	159	179

Theresa Gabriel
REGISTERED ELECTRICAL ENGINEER

October 30, 2015
PLANS APPROVAL DATE

REGISTERED PROFESSIONAL ENGINEER
Theresa Aziz Gabriel
No. E15129
Exp. 6-30-16
ELECTRICAL
STATE OF CALIFORNIA

THE STATE OF CALIFORNIA OR ITS OFFICERS OR AGENTS SHALL NOT BE RESPONSIBLE FOR THE ACCURACY OR COMPLETENESS OF SCANNED COPIES OF THIS PLAN SHEET.

TO ACCOMPANY PLANS DATED 6-26-15

4

EQUIPMENT IDENTIFICATION

ILLUMINATED SIGN IDENTIFICATION NUMBER:

SIGN No. 12345
10 ISL SCI 1.0

- SIGN NUMBER - PLACE ON POST OR STRUCTURE
- TRANSFORMER RATING (kVA)
- LIGHTING CONTROL TYPE
- NUMBER AND TYPE OF FIXTURES

DO NOT PLACE ON STANDARD OR STRUCTURE

ELECTROLIER OR EQUIPMENT IDENTIFICATION NUMBER:

12345 - 15'-0"

- MAST ARM LENGTH, IF SHOWN. DO NOT PLACE ON STANDARD OR STRUCTURE
- EQUIPMENT NUMBER - PLACE ON STANDARD OR STRUCTURE. EXISTING EQUIPMENT NUMBERS ARE SHOWN IN PARENTHESIS

CONDUIT AND CONDUCTOR IDENTIFICATION:

1½"C, 2#10, 15#14, 2 DLC, 12P#18

- PAIR
- NUMBER AND SIZE OF CONDUCTORS AND CABLES
- SIZE OF CONDUIT IN INCHES

ø1, ø2, ø2P, etc.	TRAFFIC PHASE IDENTIFICATION FOR SIGNALS, DETECTORS AND PHASE DIAGRAMS
1 2 3	LEGEND NUMBERS
A B C	EQUIPMENT, SIGNAL POLES, INSTALLATION OR ITEMS
1 2 3	CONDUIT RUN NUMBERS

SIGNAL AND LIGHTING STANDARD (TYPICAL DESIGNATION):

19A - 3 - 100

- WIND VELOCITY = 100 mph
- CASE 3 ARM LOADING
- STANDARD TYPE
- STANDARD PLAN SHEET NUMBER
- DETAIL, NUMBER, SECTION, TYPE OR ELEVATION

MISCELLANEOUS EQUIPMENT

NEW	EXISTING	
CMS	cms	CHANGEABLE MESSAGE SIGN
		CLOSED CIRCUIT TELEVISION CAMERA
		HIGHWAY ADVISORY RADIO POLE AND ANTENNA
EMS	ems	LED EXTINGUISHABLE MESSAGE SIGN
M V	m v	DETECTION DEVICE M = MICROWAVE SENSOR V = VIDEO IMAGE SENSOR

WIRING DIAGRAM LEGEND

----	EXTERNAL CONDUCTOR
——	CONDUCTOR OR BUS
	TIE POINT
	CONTACTOR COIL
	CONTACTOR, NO CONTACT
	TERMINAL BLOCKS
	CONTACTOR, NC CONTACT
	ENCLOSURE BOND
	GROUNDING ELECTRODE
	CIRCUIT BREAKER
	RECEPTACLE

PULL BOXES

NEW	EXISTING	
		PULL BOX, No. 5 UNLESS OTHERWISE INDICATED OR NOTED
3	9A(21)	PULL BOX, ADDITIONAL DESIGNATIONS OR DESCRIPTIONS

3 No. 3½ PULL BOX
5 No. 5 PULL BOX
6 No. 6 PULL BOX
7 No. 7 (CEILING PULL BOX)
8 No. 8 (PENDANT SOFFIT PULL BOX)
9 No. 9 PULL BOX
9A No. 9A PULL BOX

(C) COMMUNICATIONS PULL BOX
(E) PULL BOX WITH EXTENSION
(S) SPRINKLER CONTROL PULL BOX
(21) ANCHOR BOLTS AND CONDUIT FOR FUTURE INSTALLATION OF TYPE 21 STANDARD
(T) TRAFFIC PULL BOX

VEHICLE DETECTORS

5 J 9 U

- VEHICLE DETECTOR DESIGNATION
- U = UPPER
  L = LOWER
- SLOT NUMBER IN INPUT FILE
- INPUT FILE (I OR J)
- PHASE

NEW	EXISTING	
		TYPE A LOOP DETECTOR. OUTLINE OF SAWCUT SHOWN
		TYPE B LOOP DETECTOR. OUTLINE OF SAWCUT SHOWN
		TYPE C LOOP DETECTOR. OUTLINE OF SAWCUT SHOWN
		TYPE D LOOP DETECTOR. OUTLINE OF SAWCUT SHOWN
		TYPE E LOOP DETECTOR. OUTLINE OF SAWCUT SHOWN
		TYPE Q LOOP DETECTOR. OUTLINE OF SAWCUT SHOWN
DH	dh	DETECTOR HANDHOLE
		MICROWAVE OR VIDEO DETECTION ZONE

4 REPLACED PER ADDENDUM No. 4 DATED FEBRUARY 17, 2016

STATE OF CALIFORNIA
DEPARTMENT OF TRANSPORTATION

ELECTRICAL SYSTEMS (LEGEND AND ABBREVIATIONS)

NO SCALE

RSP ES-1C DATED OCTOBER 30, 2015 SUPERSEDES RSP ES-1C DATED JULY 19, 2013 AND STANDARD PLAN ES-1C DATED MAY 20, 2011 - PAGE 427 OF THE STANDARD PLANS BOOK DATED 2010.

REVISED STANDARD PLAN RSP ES-1C

2010 REVISED STANDARD PLAN RSP ES-1C

8-19-15

Dist	COUNTY	ROUTE	POST MILES TOTAL PROJECT	SHEET No.	TOTAL SHEETS
08	SBd	18	49.0/51.7	163	179

Theresa Gabriel
REGISTERED ELECTRICAL ENGINEER

October 30, 2015
PLANS APPROVAL DATE

REGISTERED PROFESSIONAL ENGINEER Theresa Aziz Gabriel No. E15129 Exp. 6-30-16 ELECTRICAL STATE OF CALIFORNIA

THE STATE OF CALIFORNIA OR ITS OFFICERS OR AGENTS SHALL NOT BE RESPONSIBLE FOR THE ACCURACY OR COMPLETENESS OF SCANNED COPIES OF THIS PLAN SHEET.

TO ACCOMPANY PLANS DATED 6-26-15

4

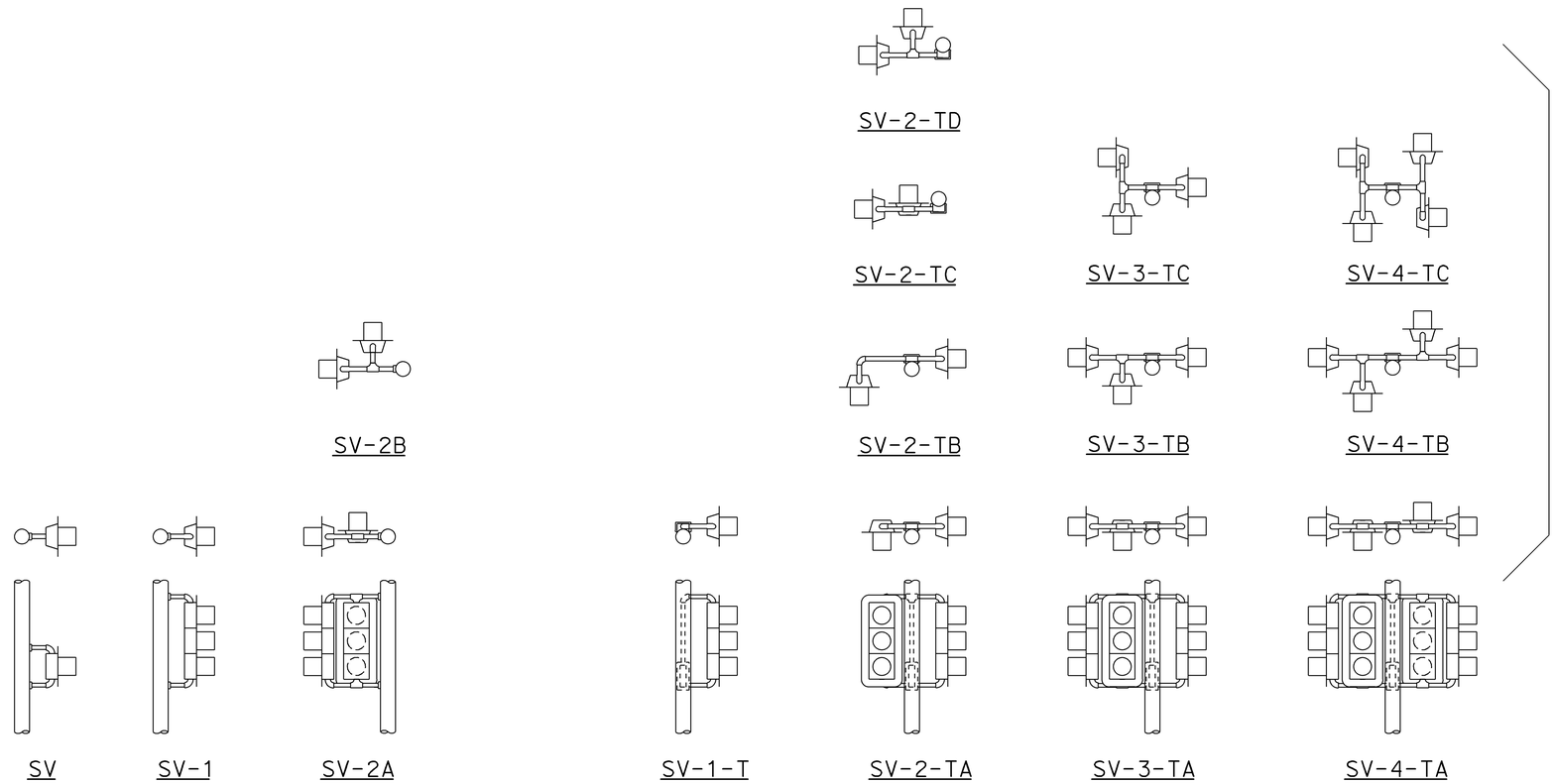

SIDE MOUNTINGS

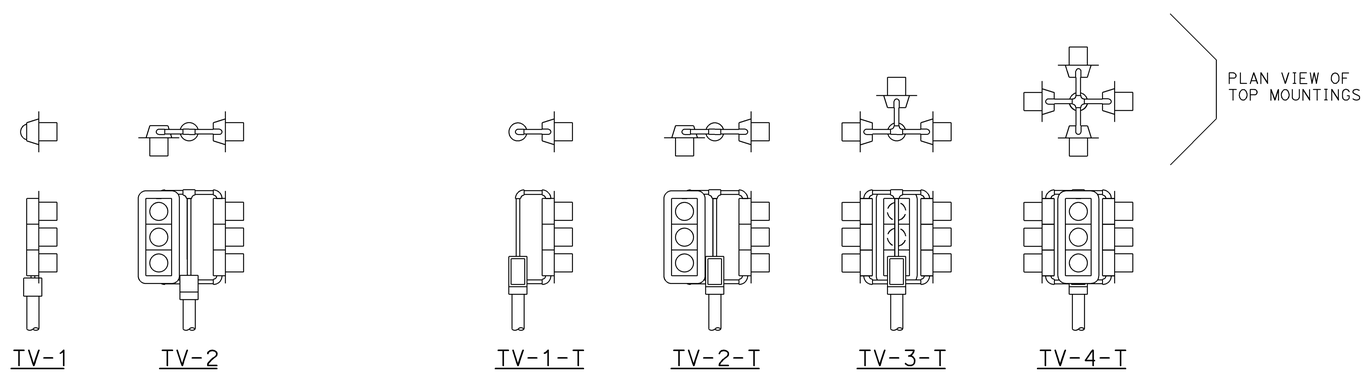

TOP MOUNTINGS

ABBREVIATIONS:

SV	SIDE MOUNTED SIGNAL HEADS
T	TERMINAL COMPARTMENT
TV	TOP MOUNTED SIGNAL HEADS
1, 2, 3, 4	NUMBER OF SIGNAL FACES (3 - SECTION, UNLESS OTHERWISE INDICATED)
A, B, C, D	CONFIGURATION OF SIGNALS

NOTES:

1. Mountings shall be oriented to provide maximum horizontal clearance to adjacent roadway.
2. Bracket arms shall be long enough to permit proper alignment of signals and backplate installation.
3. See Revised Standard Plans RSP ES-4D and RSP ES-4E for attachment fitting details.

4 **REPLACED PER ADDENDUM No. 4 DATED FEBRUARY 17, 2016**

STATE OF CALIFORNIA
DEPARTMENT OF TRANSPORTATION

ELECTRICAL SYSTEMS (SIGNAL HEADS AND MOUNTINGS)

NO SCALE

RSP ES-4A DATED OCTOBER 30, 2015 SUPERSEDES RSP ES-4A DATED JULY 19, 2013 AND STANDARD PLAN ES-4A DATED MAY 20, 2011 - PAGE 443 OF THE STANDARD PLANS BOOK DATED 2010.

REVISED STANDARD PLAN RSP ES-4A

2010 REVISED STANDARD PLAN RSP ES-4A

9-28-15

Dist	COUNTY	ROUTE	POST MILES TOTAL PROJECT	SHEET No.	TOTAL SHEETS
08	SBd	18	49.0/51.7	164	179

4

Theresa Gabriel
REGISTERED ELECTRICAL ENGINEER

October 30, 2015
PLANS APPROVAL DATE

REGISTERED PROFESSIONAL ENGINEER
Theresa Aziz Gabriel
No. E15129
Exp. 6-30-16
ELECTRICAL
STATE OF CALIFORNIA

THE STATE OF CALIFORNIA OR ITS OFFICERS OR AGENTS SHALL NOT BE RESPONSIBLE FOR THE ACCURACY OR COMPLETENESS OF SCANNED COPIES OF THIS PLAN SHEET.

TO ACCOMPANY PLANS DATED 6-26-15

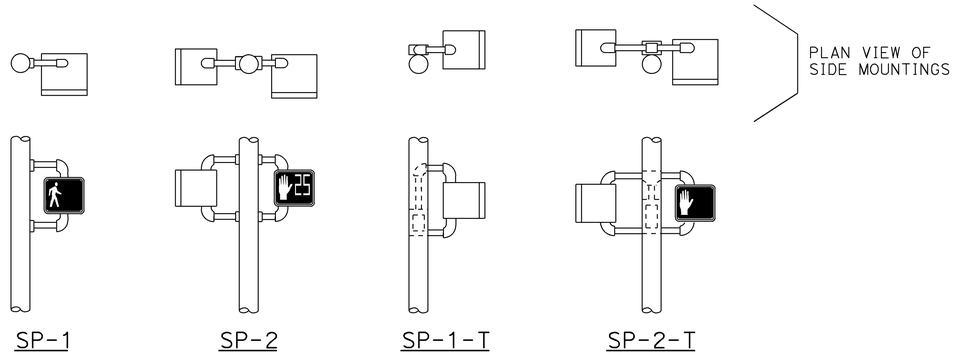

SIDE MOUNTINGS

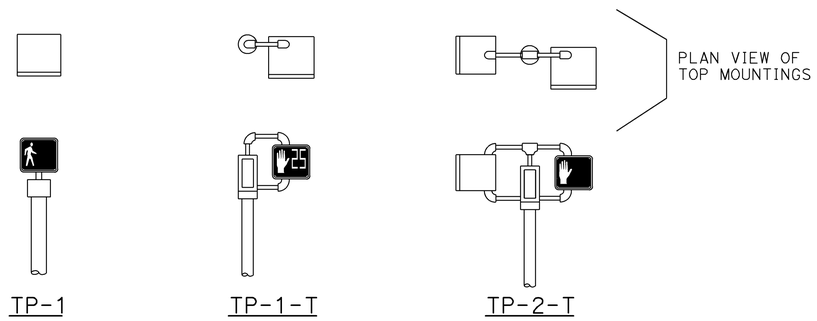

TOP MOUNTINGS

PEDESTRIAN SIGNAL HEAD MOUNTINGS
DETAIL A

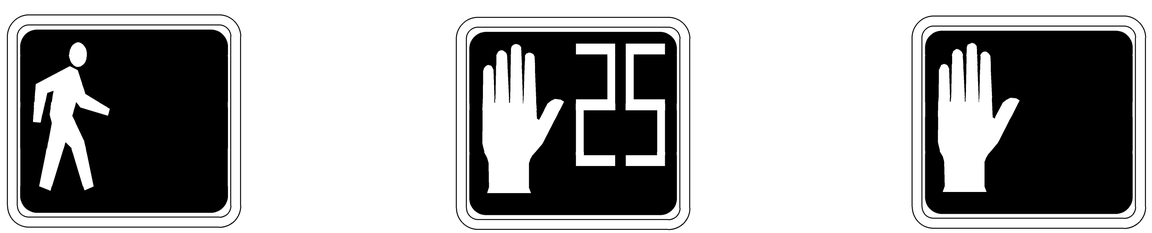

PERSON WALKING INTERVAL FLASHING UPRAISED HAND INTERVAL STEADY UPRAISED HAND INTERVAL

LED COUNTDOWN PEDESTRIAN SIGNAL FACE MODULE
DETAIL B

NOTES:

1. Mounting shall be oriented to provide maximum horizontal clearance to adjacent roadway.
2. Bracket arms shall be long enough to permit proper alignment of signals.
3. See Revised Standard Plan RSP ES-4D for attachment fittings details.

ABBREVIATIONS:

1, 2	NUMBER OF SIGNAL FACES
SP	SIDE MOUNTED PEDESTRIAN SIGNAL
T	TERMINAL COMPARTMENT
TP	TOP MOUNTED PEDESTRIAN SIGNAL

4 **REPLACED PER ADDENDUM No. 4 DATED FEBRUARY 17, 2016**

STATE OF CALIFORNIA
DEPARTMENT OF TRANSPORTATION

ELECTRICAL SYSTEMS (PEDESTRIAN SIGNAL HEADS)

NO SCALE

RSP ES-4B DATED OCTOBER 30, 2015 SUPERSEDES RSP ES-4B DATED JULY 19, 2013 AND STANDARD PLAN ES-4B DATED MAY 20, 2011 - PAGE 444 OF THE STANDARD PLANS BOOK DATED 2010.

REVISED STANDARD PLAN RSP ES-4B

2010 REVISED STANDARD PLAN RSP ES-4B

9-1-15

Dist	COUNTY	ROUTE	POST MILES TOTAL PROJECT	SHEET No.	TOTAL SHEETS
08	SBd	18	49.0/51.7	165	179

4

Theresa Gabriel
REGISTERED ELECTRICAL ENGINEER

October 30, 2015
PLANS APPROVAL DATE

REGISTERED PROFESSIONAL ENGINEER
Theresa Aziz Gabriel
No. E15129
Exp. 6-30-16
ELECTRICAL
STATE OF CALIFORNIA

THE STATE OF CALIFORNIA OR ITS OFFICERS OR AGENTS SHALL NOT BE RESPONSIBLE FOR THE ACCURACY OR COMPLETENESS OF SCANNED COPIES OF THIS PLAN SHEET.

TO ACCOMPANY PLANS DATED 6-26-15

VISORS

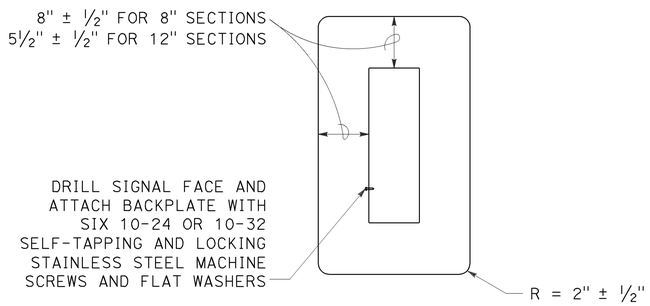

8" AND 12" SECTIONS

BACKPLATE

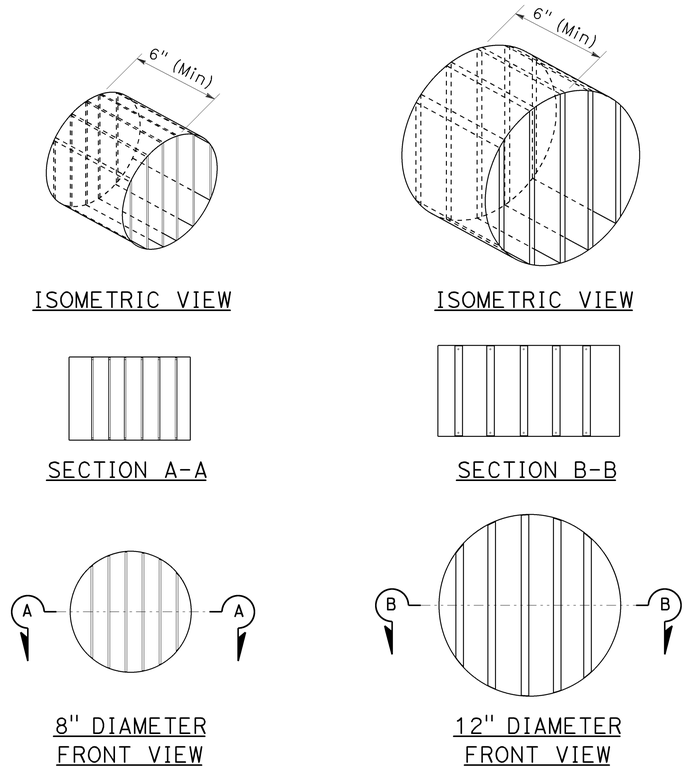

ISOMETRIC VIEW

ISOMETRIC VIEW

SECTION A-A

SECTION B-B

8" DIAMETER FRONT VIEW

12" DIAMETER FRONT VIEW

DIRECTIONAL LOUVER

Directional louvers shall be oriented and secured in place with one plated brass machine screw and nut.

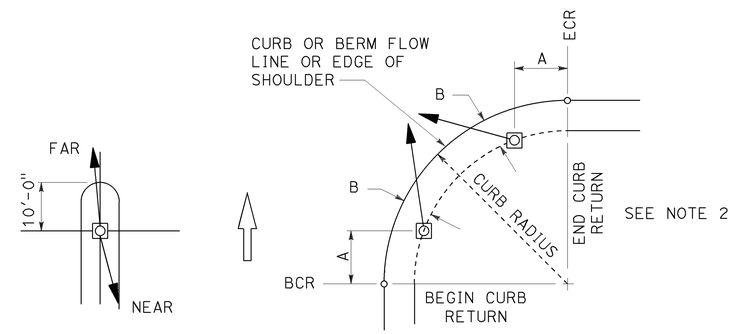

NOTES:

1. Typical signal pole placement unless dimensioned on plans.
2. For A and B dimensions, see Pole Schedule.

SIGNAL STANDARD PLACEMENT DIMENSIONS AND EQUIPMENT LOCATIONS

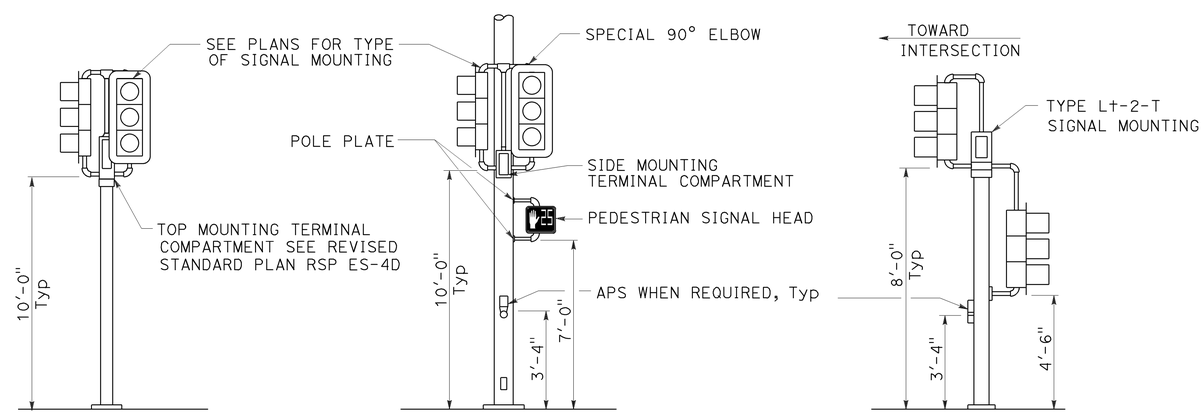

TOP MOUNTED SIGNALS (TV)

Type 1-A, 1-B, 1-C and 1-D standard as indicated on the plans

SIDE MOUNTED SIGNALS (SV AND SP)

Normally used on standards with luminaire or signal mast arm

LEFT TURN LANE SIGNAL

Type 1-A, 1-B, 1-C and 1-D standard as indicated on plans

TYPICAL SIGNAL HEAD INSTALLATIONS

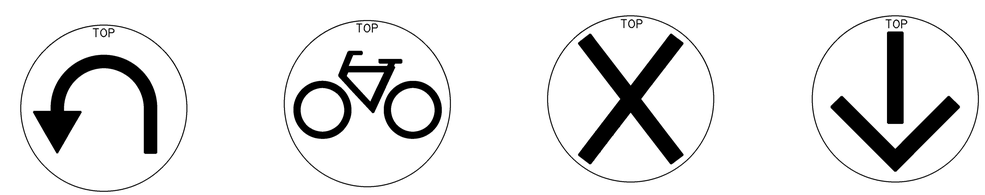

U-TURN

BICYCLE

LANE CONTROL

LANE CONTROL

SIGNAL FACES

STATE OF CALIFORNIA
DEPARTMENT OF TRANSPORTATION

ELECTRICAL SYSTEMS (SIGNAL HEADS AND MOUNTINGS)

NO SCALE

RSP ES-4C DATED OCTOBER 30, 2015 SUPERSEDES RSP ES-4C DATED JULY 19, 2013 AND STANDARD PLAN ES-4C DATED MAY 20, 2011 - PAGE 445 OF THE STANDARD PLANS BOOK DATED 2010.

REVISED STANDARD PLAN RSP ES-4C

2010 REVISED STANDARD PLAN RSP ES-4C

4 **REPLACED PER ADDENDUM No. 4 DATED FEBRUARY 17, 2016**

9-28-15

4 REPLACED PER ADDENDUM No. 4 DATED FEBRUARY 17, 2016

Dist	COUNTY	ROUTE	POST MILES TOTAL PROJECT	SHEET No.	TOTAL SHEETS
08	SBd	18	49.0/51.7	169	179

Theresa Gabriel
REGISTERED ELECTRICAL ENGINEER

October 30, 2015
PLANS APPROVAL DATE

REGISTERED PROFESSIONAL ENGINEER Theresa Aziz Gabriel No. E15129 Exp. 6-30-16 ELECTRICAL STATE OF CALIFORNIA

THE STATE OF CALIFORNIA OR ITS OFFICERS OR AGENTS SHALL NOT BE RESPONSIBLE FOR THE ACCURACY OR COMPLETENESS OF SCANNED COPIES OF THIS PLAN SHEET.

TO ACCOMPANY PLANS DATED 6-26-15

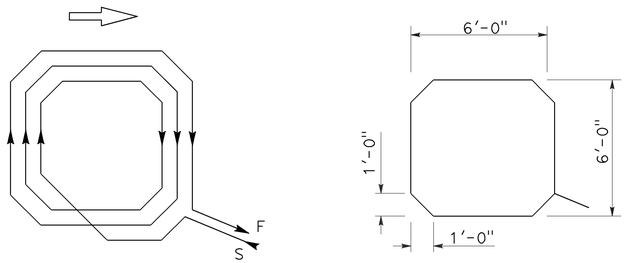

WINDING DETAIL SAWCUT DETAIL

TYPE A LOOP DETECTOR CONFIGURATION

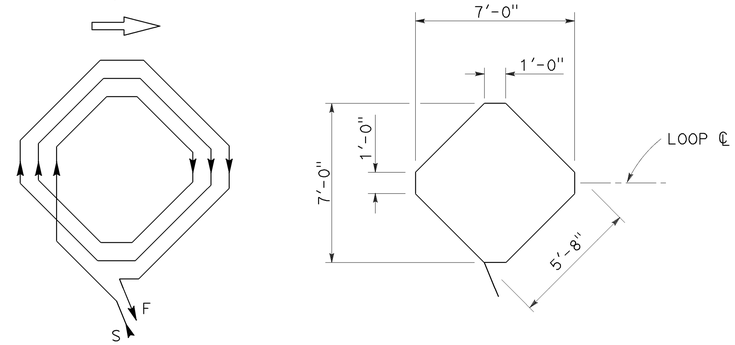

WINDING DETAIL SAWCUT DETAIL

TYPE B LOOP DETECTOR CONFIGURATION

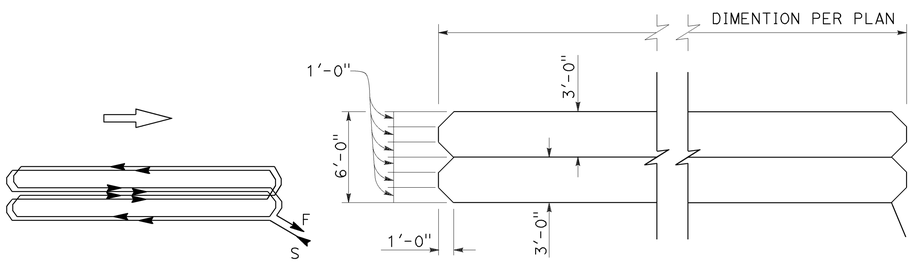

WINDING DETAIL SAWCUT DETAIL

TYPE C LOOP DETECTOR CONFIGURATION

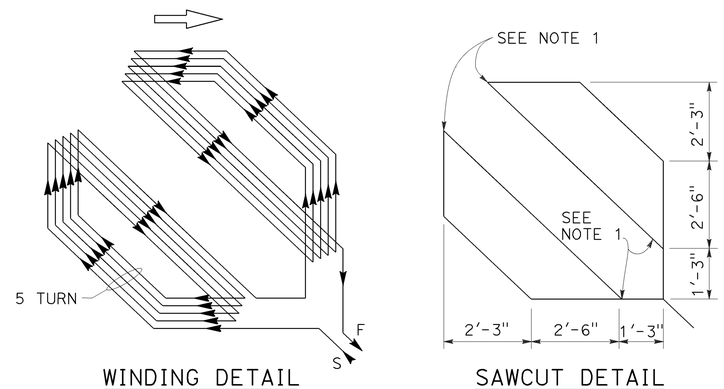

WINDING DETAIL SAWCUT DETAIL

TYPE D LOOP DETECTOR CONFIGURATION

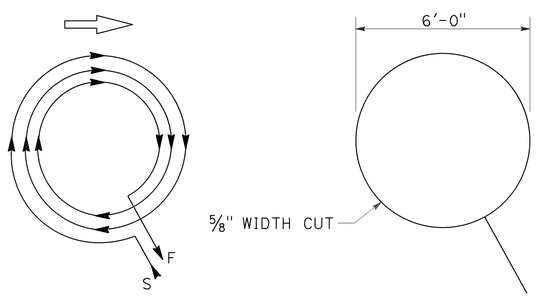

WINDING DETAIL SAWCUT DETAIL

TYPE E LOOP DETECTOR CONFIGURATION

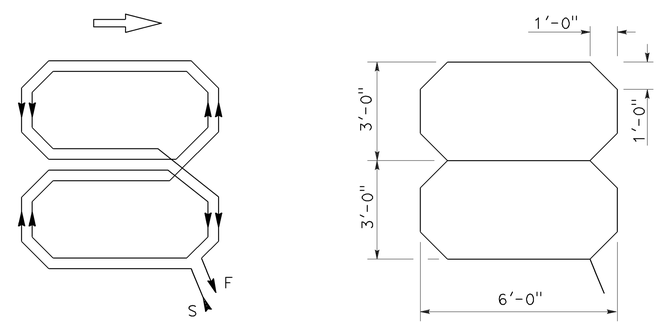

WINDING DETAIL SAWCUT DETAIL

TYPE Q LOOP DETECTOR CONFIGURATION

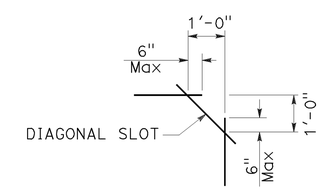

PLAN VIEW OF DIAGONAL SLOT AT CORNERS

NOTES:

1. Round corners of acute angle sawcuts to prevent damage to conductors.
2. Typical distance separating loops from edge to edge is 10' for Type A, B, D and E installation in single lane.
3. Use Type D loops for limit line detector installations in left turn and bicycle lanes.

STATE OF CALIFORNIA
DEPARTMENT OF TRANSPORTATION

ELECTRICAL SYSTEMS (DETECTORS)

NO SCALE

RSP ES-5B DATED OCTOBER 30, 2015 SUPERSEDES RSP ES-5B DATED JULY 19, 2013 AND STANDARD PLAN ES-5B DATED MAY 20, 2011 - PAGE 449 OF THE STANDARD PLANS BOOK DATED 2010.

REVISED STANDARD PLAN RSP ES-5B

2010 REVISED STANDARD PLAN RSP ES-5B

9-25-15

Dist	COUNTY	ROUTE	POST MILES TOTAL PROJECT	SHEET No.	TOTAL SHEETS
08	SBd	18	49.0/51.7	170	179

4

Theresa Gabriel
REGISTERED ELECTRICAL ENGINEER

October 30, 2015
PLANS APPROVAL DATE

REGISTERED PROFESSIONAL ENGINEER
Theresa Aziz Gabriel
No. E15129
Exp. 6-30-16
ELECTRICAL
STATE OF CALIFORNIA

THE STATE OF CALIFORNIA OR ITS OFFICERS OR AGENTS SHALL NOT BE RESPONSIBLE FOR THE ACCURACY OR COMPLETENESS OF SCANNED COPIES OF THIS PLAN SHEET.

TO ACCOMPANY PLANS DATED 6-26-15

2010 REVISED STANDARD PLAN RSP ES-5C

NOTES:

1. Back casting shape to fit curvature of pole.
2. Provide cover fitting for top of post, when PBA is mounted on push button assembly post.
3. Install push button on crosswalk side of standard.
4. Use R10 series regulatory signs and plaques for pedestrian and bicycle facilities.

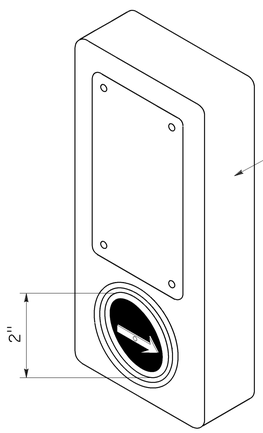

ACCESSIBLE PEDESTRIAN SIGNAL

DETAIL A

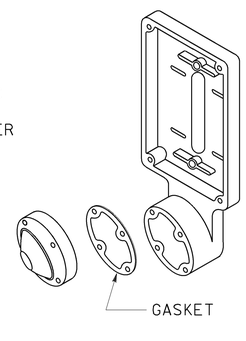

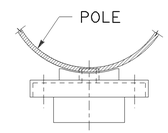

TOP VIEW

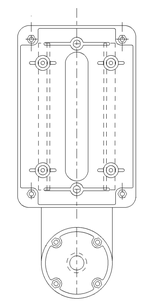

FRONT VIEW

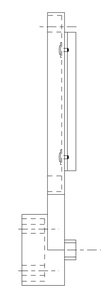

SIDE VIEW

TYPE B PUSH BUTTON ASSEMBLY

DETAIL B

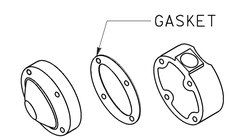

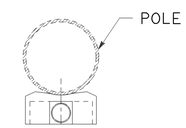

TOP VIEW

FRONT VIEW

SIDE VIEW

TYPE C PUSH BUTTON ASSEMBLY

DETAIL C

STATE OF CALIFORNIA
DEPARTMENT OF TRANSPORTATION

ELECTRICAL SYSTEMS (ACCESSIBLE PEDESTRIAN SIGNAL AND PUSH BUTTON ASSEMBLIES)

NO SCALE

4 **REPLACED PER ADDENDUM No. 4 DATED FEBRUARY 17, 2016**

RSP ES-5C DATED OCTOBER 30, 2015 SUPERSEDES RSP ES-5C DATED JULY 19, 2013 AND STANDARD PLAN ES-5C DATED MAY 20, 2011 - PAGE 450 OF THE STANDARD PLANS BOOK DATED 2010.

REVISED STANDARD PLAN RSP ES-5C

Dist	COUNTY	ROUTE	POST MILES TOTAL PROJECT	SHEET No.	TOTAL SHEETS
08	SBd	18	49.0/51.7	171	179

4

Theresa Gabriel
REGISTERED ELECTRICAL ENGINEER

October 30, 2015
PLANS APPROVAL DATE

REGISTERED PROFESSIONAL ENGINEER Theresa Aziz Gabriel No. E15129 Exp. 6-30-16 ELECTRICAL STATE OF CALIFORNIA

THE STATE OF CALIFORNIA OR ITS OFFICERS OR AGENTS SHALL NOT BE RESPONSIBLE FOR THE ACCURACY OR COMPLETENESS OF SCANNED COPIES OF THIS PLAN SHEET.

TO ACCOMPANY PLANS DATED 6-26-15

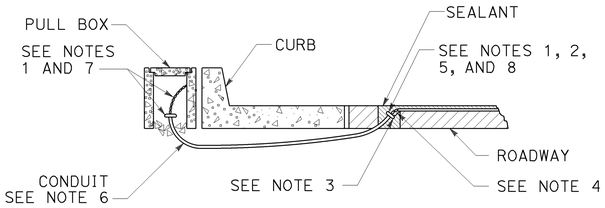

TYPE A
CURB TERMINATION DETAIL

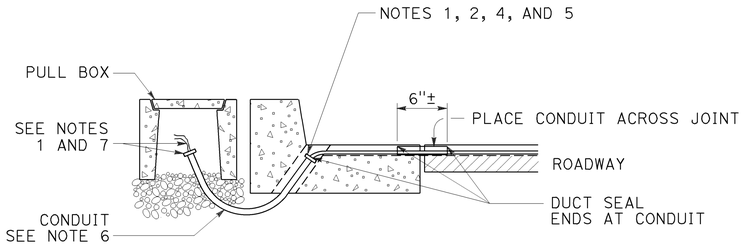

CROSS SECTION

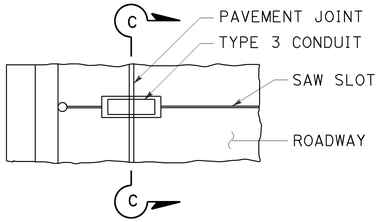

PLAN VIEW

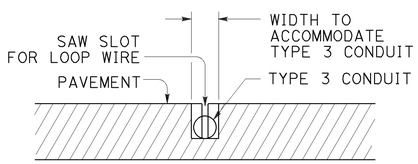

SECTION C-C

TYPE B
CURB TERMINATION DETAIL

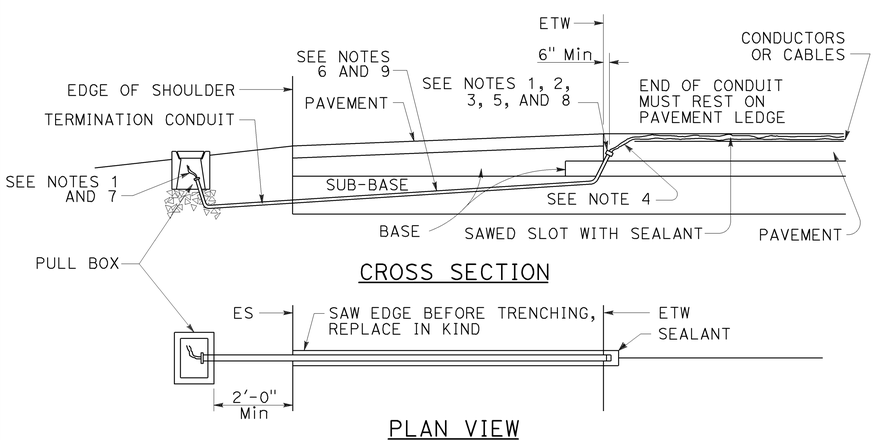

CROSS SECTION

PLAN VIEW

SHOULDER TERMINATION DETAILS

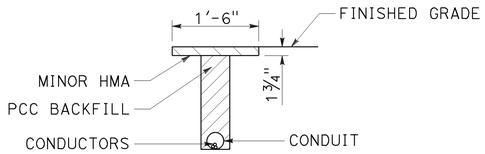

"T" TRENCH
DETAIL T

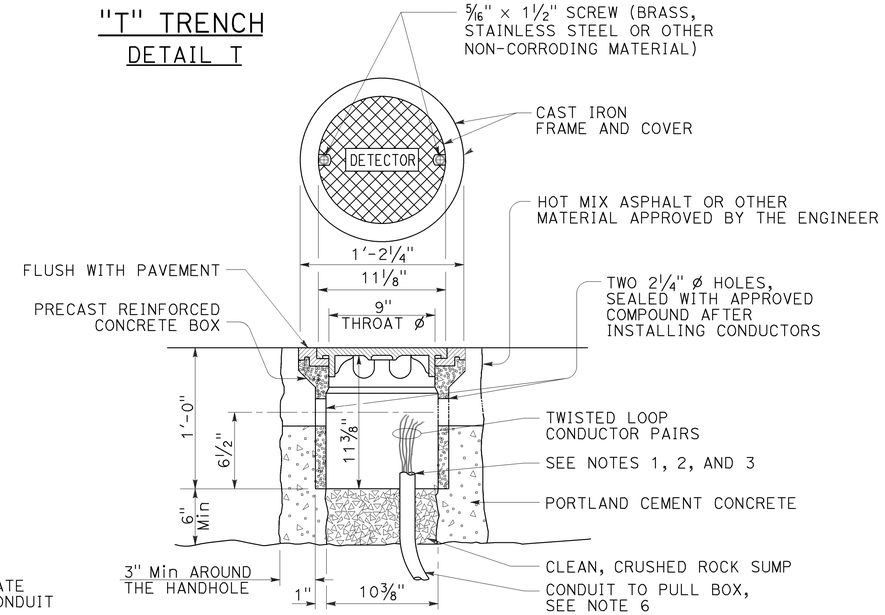

DETECTOR HANDHOLE DETAIL

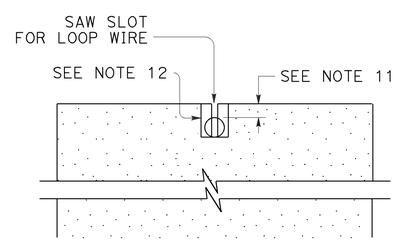

SECTION A-A

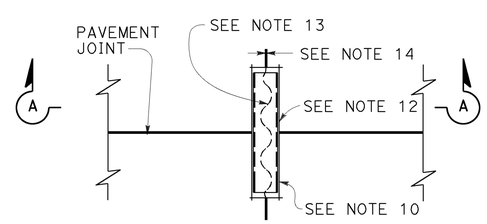

PLAN VIEW

TYPICAL LOOP LEAD-IN DETAIL
AT PAVEMENT JOINT

NOTES:

1. Bushing shall be used at end of conduit.
2. Tape detector conductors or cables 3" each side of bushings.
3. Install duct seal compound to each end of termination conduit before installing sealant.
4. Round all sharp edges where detector conductors or cables have to pass.
5. End of conduit shall be 3⅛" below roadway surface.
6.

Conduit size	Loop conductors
1"C minimum	1 to 2 pairs
1½"C minimum	3 to 4 pairs
2"C minimum	5 or more pairs

7. Splice detector conductors or cables to detector lead-in-cable.
8. Location of detector handhole when shown on plans.
9. When the shoulder and traveled way are paved with the same material and there is no joint between them, the conduit shall extend only 2'-0" into the shoulder pavement.
10. ¾"C, Type 3 conduit 6" long minimum, plug both ends with duct compound to keep out sealant.
11. ½" Minimum between top of conduit and pavement surface.
12. Sawcut shall not exceed 1" in width and ⅛" longer than conduit to be installed.
13. Conductors with ½" minimum slack inside conduit.
14. Inductive loop detector saw slot.

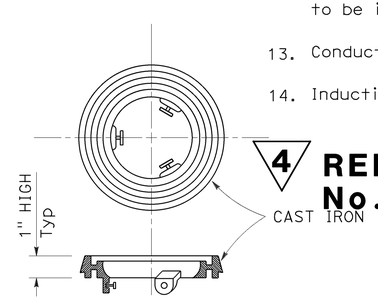

LOCKING GRADE RING

4 **REPLACED PER ADDENDUM No. 4 DATED FEBRUARY 17, 2016**

STATE OF CALIFORNIA
DEPARTMENT OF TRANSPORTATION

ELECTRICAL SYSTEMS (CURB AND SHOULDER TERMINATION, TRENCH, AND HANDHOLE DETAILS)

NO SCALE

RSP ES-5D DATED OCTOBER 30, 2015 SUPERSEDES RSP ES-5D DATED JULY 19, 2013 AND STANDARD PLAN ES-5D DATED MAY 20, 2011 - PAGE 451 OF THE STANDARD PLANS BOOK DATED 2010.

REVISED STANDARD PLAN RSP ES-5D

2010 REVISED STANDARD PLAN RSP ES-5D

8-19-15

4 **REPLACED PER ADDENDUM No. 4 DATED FEBRUARY 17, 2016**

Dist	COUNTY	ROUTE	POST MILES TOTAL PROJECT	SHEET No.	TOTAL SHEETS
08	SBd	18	49.0/51.7	173	179

4

REGISTERED CIVIL ENGINEER

October 30, 2015

PLANS APPROVAL DATE

REGISTERED PROFESSIONAL ENGINEER Stanley P. Johnson No. C57793 Exp. 3-31-16 CIVIL STATE OF CALIFORNIA

THE STATE OF CALIFORNIA OR ITS OFFICERS OR AGENTS SHALL NOT BE RESPONSIBLE FOR THE ACCURACY OR COMPLETENESS OF SCANNED COPIES OF THIS PLAN SHEET.

TO ACCOMPANY PLANS DATED 6-26-15

NOTE:

Handhole shall be located on the downstream side of traffic.

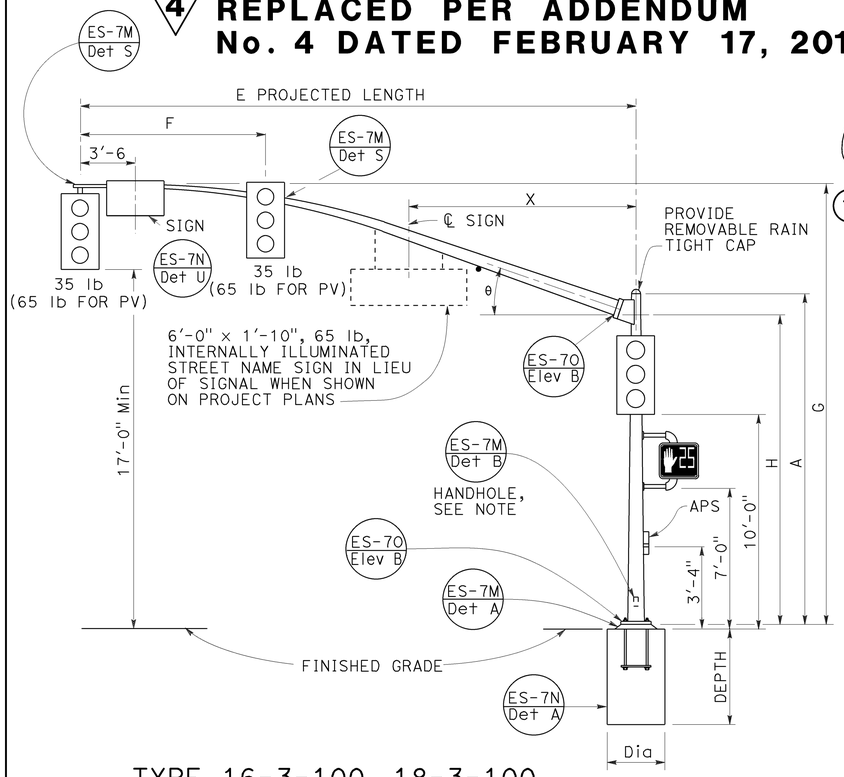

TYPE 16-3-100, 18-3-100, 23-3-100, 27-3-100

ELEVATION A

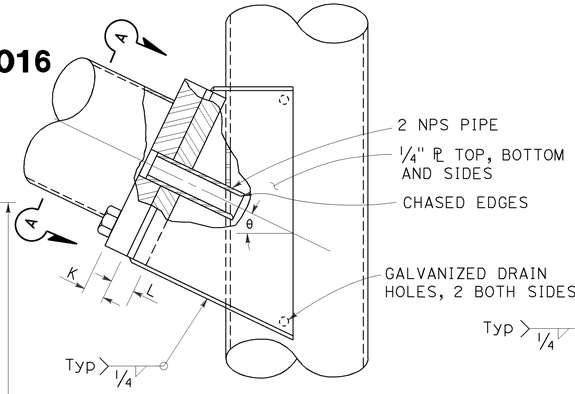

ELEVATION C

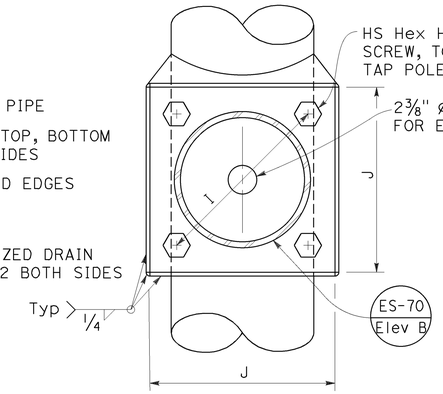

VIEW A-A

SIGNAL MAST ARM CONNECTION

DETAIL A

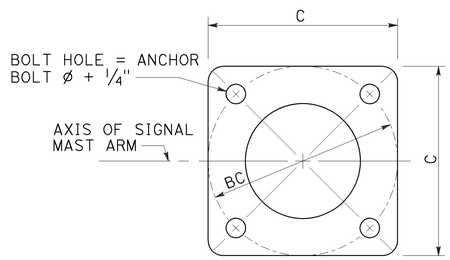

BASE PLATE

DETAIL B

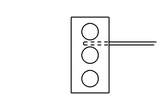

TYPE 17-3-100

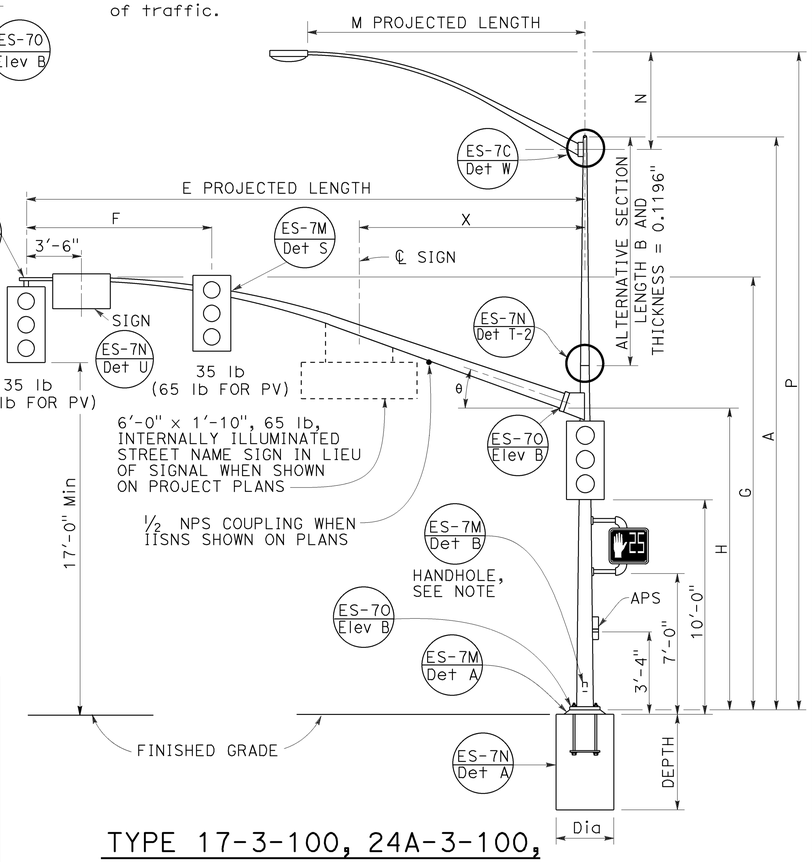

TYPE 17-3-100, 24A-3-100, 19-3-100, 26-3-100, 19A-3-100, 26A-3-100, 24-3-100

ELEVATION B

SIGNAL MAST ARM DATA

E PROJECTED LENGTH	F Min SPACING	G MOUNTING HEIGHT	H	Min OD AT POLE	THICKNESS	I BOLT CIRCLE	HS CAP SCREWS	J PLATE SIZE	K MAST ARM ℙ THICKNESS	L POLE ℙ THICKNESS	θ	X Max
15'-0"	8'-0"	21'-8"±	17'-6"	7 3/8"	0.1793"	12"	1 1/4"-7NC-3"	1'-0"	1 1/4"	1 1/2"	23°	-
20'-0"		21'-8"±		7 3/8"								
25'-0"	12'-0"	22'-8"±	16'-0"	7 3/8"	0.2391"							10'-6"
30'-0"		23'-0"±		8"								
35'-0"	14'-0"			8 3/4"		13"		1'-1"	1 1/2"	1 3/4"	21°	
40'-0"	15'-0"			9 3/8"							15°	13'-0"
45'-0"		23'-8"±		10 1/16"								

LUMINAIRE MAST ARM DATA

M PROJECTED LENGTH	N RISE	Min OD AT POLE	THICKNESS	P MOUNTING HEIGHT 30'-0" POLE	P MOUNTING HEIGHT 35'-0" POLE
6'-0"	2'-0"±	3 1/4"	0.1196"	31'-6"±	36'-6"±
8'-0"	2'-6"±	3 1/2"		32'-0"±	37'-0"±
10'-0"	3'-3"±	3 7/8"		32'-9"±	37'-9"±
12'-0"	4'-3"±			33'-9"±	38'-9"±
15'-0"	4'-9"±	4 1/4"		34'-3"±	39'-3"±

POLE DATA / BASE PLATE DATA / CIDH PILE FOUNDATION

POLE TYPE	LOAD CASE	WIND VELOCITY (mph)	A HEIGHT	Min OD BASE	Min OD TOP	THICKNESS	ALTERNATIVE SECTION B LENGTH	ALTERNATIVE SECTION BOTTOM	ALTERNATIVE SECTION TOP	C	BC = BOLT CIRCLE	THICKNESS	ANCHOR BOLT SIZE	LUMINAIRE MAST ARM	SIGNAL MAST ARM	CIDH DIAMETER	CIDH DEPTH	CIDH REINFORCED
16-3-100	3	100	18'-6"	10 3/4"	8 1/16"	0.1793"	NONE			1'-5 1/2"	1'-5 1/2"	3"	1 1/2" ø x 42"	NONE	15'-0", [20'-0"]	3'-0"	8'-6"	YES
17-3-100			30'-0"		6 7/16"		10'-0"	7 7/8"	6 7/16"					6'-15' [12'-0"]				
18-3-100			17'-0"	1'-0"	8 5/16"	0.2391"	NONE			1'-7"			2" ø x 42"	NONE	25'-0", [30'-0"]		9'-6"	
19-3-100			30'-0"		7 11/16"		10'-0"	9 1/8"	7 11/16"					6'-15' [12'-0"]			11'-0"	
19A-3-100			35'-0"		6 15/16"		15'-0"		6 15/16"					6'-15' [15'-0"]				
23-3-100			17'-0"		9 9/16"		NONE							NONE	35'-0"			
24-3-100			30'-0"		7 11/16"		10'-0"	9 1/8"	7 11/16"					6'-15' [12'-0"]				
24A-3-100			35'-0"		6 15/16"		15'-0"		6 15/16"					6'-15' [15'-0"]				
26-3-100			30'-0"	1'-2"	7 13/16"	0.3125"	10'-0"	9 1/4"	7 13/16"	1'-11"	1'-9"		2 1/2" ø x 42"	6'-15' [12'-0"]	40'-0", [45'-0"]	3'-6"	12'-0"	
26A-3-100			35'-0"		7 1/16"		15'-0"		7 1/16"					6'-15' [15'-0"]				
27-3-100			17'-0"		9 11/16"		NONE							NONE				

[ ] INDICATES MAST ARM LENGTH TO BE USED UNLESS OTHERWISE NOTED ON PLANS.

STATE OF CALIFORNIA
DEPARTMENT OF TRANSPORTATION

ELECTRICAL SYSTEMS (SIGNAL AND LIGHTING STANDARD, CASE 3 SIGNAL MAST ARM LOADING, WIND VELOCITY=100 MPH AND SIGNAL MAST ARM LENGTHS 15' TO 45')

NO SCALE

RSP ES-7E DATED OCTOBER 30, 2015 SUPERSEDES RSP ES-7E DATED JULY 19, 2013 AND ES-7E DATED MAY 20, 2011 - PAGE 466 OF THE STANDARD PLANS BOOK DATED 2010.

REVISED STANDARD PLAN RSP ES-7E

2010 REVISED STANDARD PLAN RSP ES-7E

8-24-15

Dist	COUNTY	ROUTE	POST MILES TOTAL PROJECT	SHEET No.	TOTAL SHEETS
08	SBd	18	49.0/51.7	174	179

REGISTERED CIVIL ENGINEER

October 30, 2015
PLANS APPROVAL DATE

REGISTERED PROFESSIONAL ENGINEER Stanley P. Johnson No. C57793 Exp. 3-31-16 CIVIL STATE OF CALIFORNIA

THE STATE OF CALIFORNIA OR ITS OFFICERS OR AGENTS SHALL NOT BE RESPONSIBLE FOR THE ACCURACY OR COMPLETENESS OF SCANNED COPIES OF THIS PLAN SHEET.

TO ACCOMPANY PLANS DATED 6-26-15

2010 REVISED STANDARD PLAN RSP ES-7F

4 **REPLACED PER ADDENDUM No. 4 DATED FEBRUARY 17, 2016**

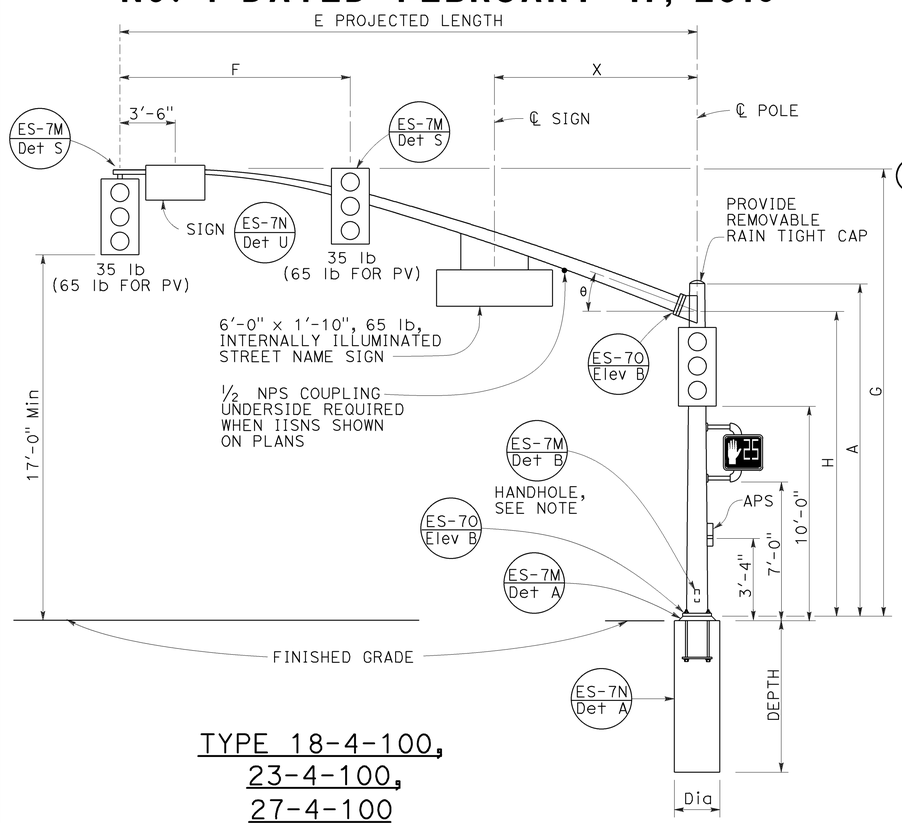

TYPE 18-4-100, 23-4-100, 27-4-100
ELEVATION A

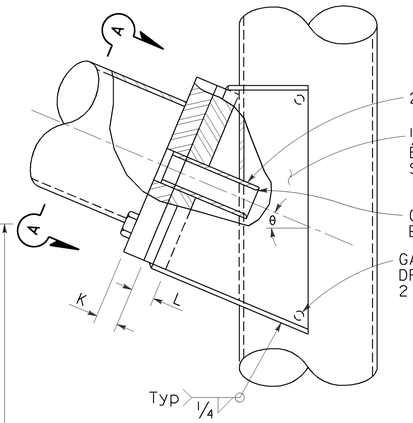

ELEVATION C

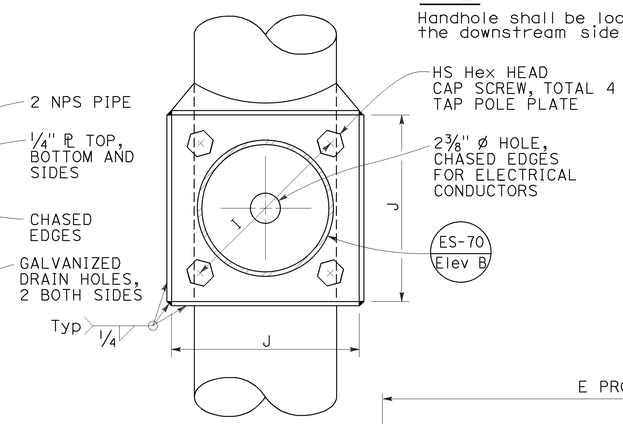

VIEW A-A

SIGNAL MAST ARM CONNECTION
DETAIL A

NOTE:
Handhole shall be located on the downstream side of traffic. 4

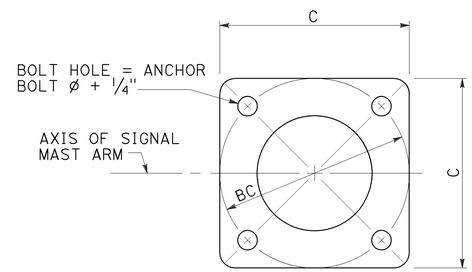

BASE PLATE
DETAIL B

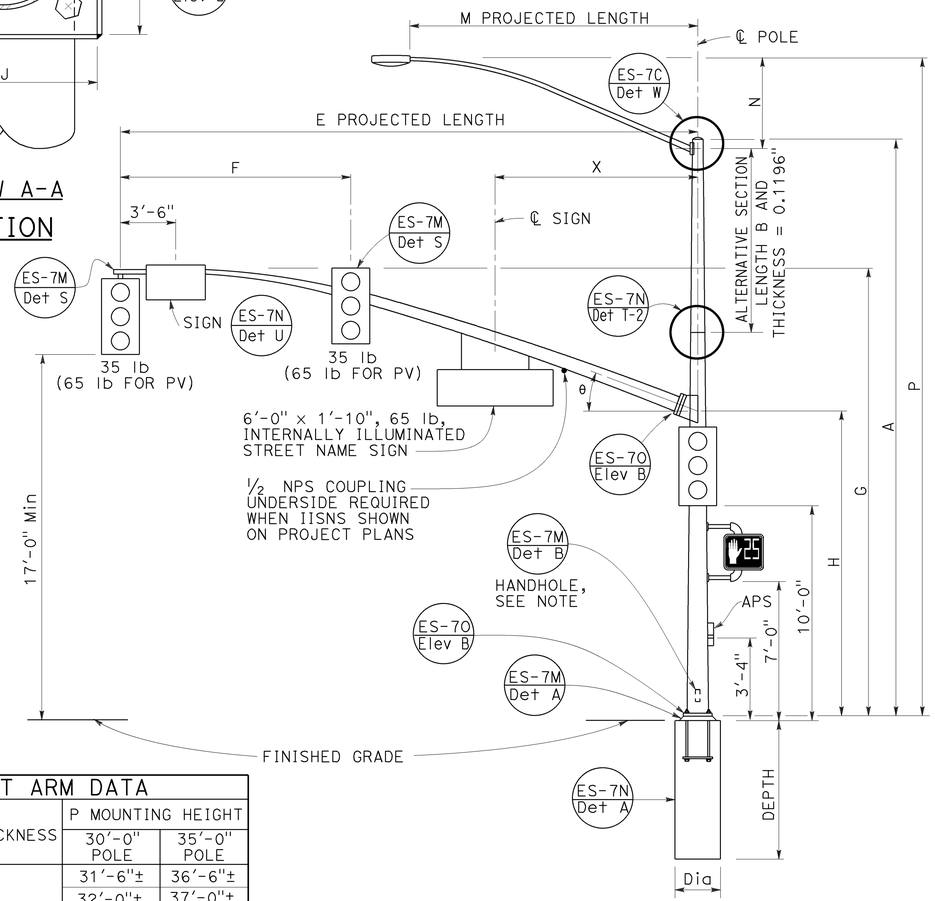

TYPE 19-4-100, 19A-4-100, 24-4-100, 24A-4-100, 26-4-100, 26A-4-100
ELEVATION B

SIGNAL MAST ARM DATA												
E PROJECTED LENGTH	F Min SPACING	G MOUNTING HEIGHT	H	Min OD AT POLE	THICKNESS	I BOLT CIRCLE	HS CAP SCREWS	J PLATE SIZE	K MAST ARM ℄ THICKNESS	L POLE ℄ THICKNESS	θ	X Max
25'-0"	10'-0"	22'-8"±	16'-0"	7⅜"	0.2391"	12"	1¼"-7NC-3"	1'-0"	1¼"	1½"	23°	10'-6"
30'-0"	12'-0"	23'-0"±		8"								
35'-0"	14'-0"			8 11/16"		13½"		1'-1½"	1½"	1¾"	21°	
40'-0"	15'-0"			9⅜"							15°	13'-0"
45'-0"		23'-8"±		10¼"								

LUMINAIRE MAST ARM DATA					
M PROJECTED LENGTH	N RISE	Min OD AT POLE	THICKNESS	P MOUNTING HEIGHT	
				30'-0" POLE	35'-0" POLE
6'-0"	2'-0"±	3¼"	0.1196"	31'-6"±	36'-6"±
8'-0"	2'-6"±	3½"		32'-0"±	37'-0"±
10'-0"	3'-3"±	3⅞"		32'-9"±	37'-9"±
12'-0"	4'-3"±			33'-9"±	38'-9"±
15'-0"	4'-9"±	4¼"		34'-3"±	39'-3"±

POLE TYPE	LOAD CASE	WIND VELOCITY (mph)	POLE DATA							BASE PLATE DATA				LUMINAIRE MAST ARM	SIGNAL MAST ARM	CIDH PILE FOUNDATION		
			A	Min OD		THICKNESS	ALTERNATIVE SECTION			C	BC = BOLT CIRCLE	THICKNESS	ANCHOR BOLT SIZE			Dia	DEPTH	REINFORCED
			HEIGHT	BASE	TOP		B LENGTH	BOTTOM	TOP									
18-4-100	4	100	17'-0"	12⅛"	9 9/16"	0.3125"	NONE			1'-7"	1'-5½"	3"	2" Ø x 42"	NONE	25'-0", 30'-0"	3'-0"	11'-0"	YES
19-4-100			30'-0"		7 11/16"		10'-0"	9⅛"	7 11/16"					6'-15' 12'-0"				
19A-4-100			35'-0"		6 15/16"		15'-0'		6 15/16"					6'-15' 15'-0"				
23-4-100			17'-0"		9 9/16"		NONE							NONE	35'-0"			
24-4-100			30'-0"		7 11/16"		10'-0"	9⅛"	7 11/16"					6'-15' 12'-0"				
24A-4-100			35'-0"		6 15/16"		15'-0"		6 15/16"					6'-15' 15'-0"				
26-4-100			30'-0"	14"	8 3/16"		10'-0"	9⅝"	8 3/16"	23"	21"		2½" Ø x 42"	6'-15' 12'-0"	40'-0", 45'-0"	3'-6"	12'-0"	
26A-4-100			35'-0"		7 7/16"		15'-0"		7 7/16"					6'-15' 15'-0"				
27-4-100			17'-0"		10 1/16"		NONE							NONE				

INDICATES MAST ARM LENGTH TO BE USED UNLESS OTHERWISE NOTED ON PLANS.

STATE OF CALIFORNIA
DEPARTMENT OF TRANSPORTATION

ELECTRICAL SYSTEMS (SIGNAL AND LIGHTING STANDARD, CASE 4 SIGNAL MAST ARM LOADING, WIND VELOCITY=100 MPH AND SIGNAL MAST ARM LENGTHS 25' TO 45')

NO SCALE

RSP ES-7F DATED OCTOBER 30, 2015 SUPERSEDES RSP ES-7F DATED JULY 19, 2013 AND ES-7F DATED MAY 20, 2011 - PAGE 467 OF THE STANDARD PLANS BOOK DATED 2010.

REVISED STANDARD PLAN RSP ES-7F

8-24-15

4 ADDED PER ADDENDUM No. 4 DATED FEBRUARY 17, 2016

Dist	COUNTY	ROUTE	POST MILES TOTAL PROJECT	SHEET No.	TOTAL SHEETS
08	SBd	18	49.0/51.7	174A	179

REGISTERED CIVIL ENGINEER

October 30, 2015

PLANS APPROVAL DATE

REGISTERED PROFESSIONAL ENGINEER Stanley P. Johnson No. C57793 Exp. 3-31-16 CIVIL STATE OF CALIFORNIA

THE STATE OF CALIFORNIA OR ITS OFFICERS OR AGENTS SHALL NOT BE RESPONSIBLE FOR THE ACCURACY OR COMPLETENESS OF SCANNED COPIES OF THIS PLAN SHEET.

TO ACCOMPANY PLANS DATED 6-26-15

NOTE:
Handhole shall be located on the downstream side of traffic.

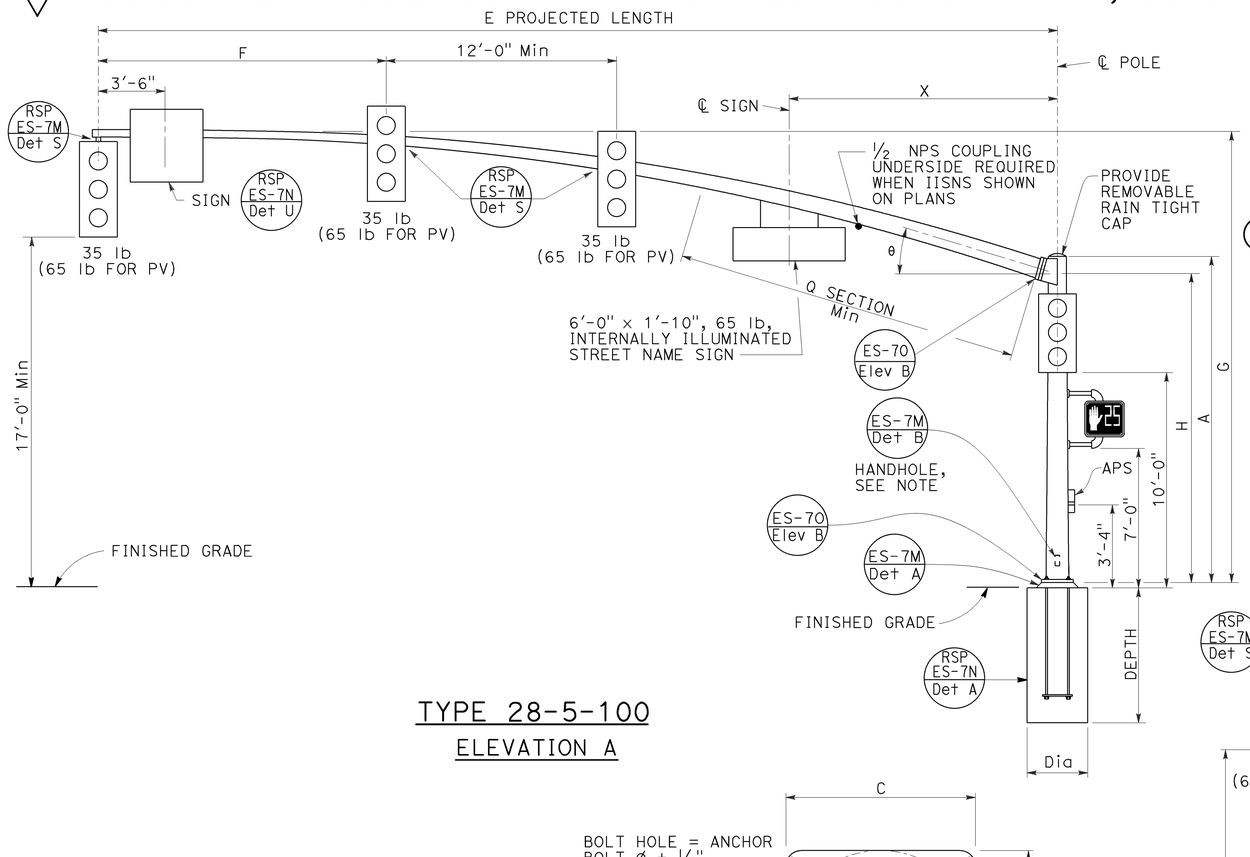

TYPE 28-5-100

ELEVATION A

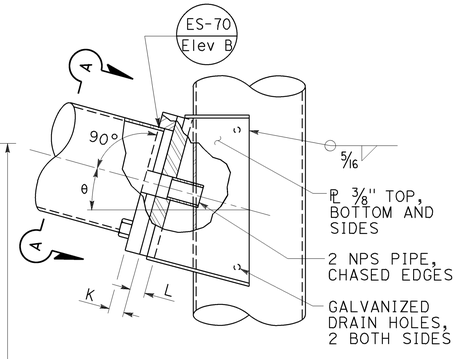

ELEVATION C

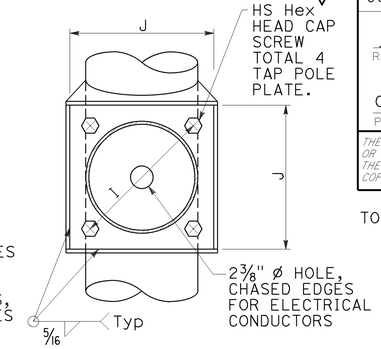

VIEW A-A

SIGNAL MAST ARM CONNECTION

DETAIL A

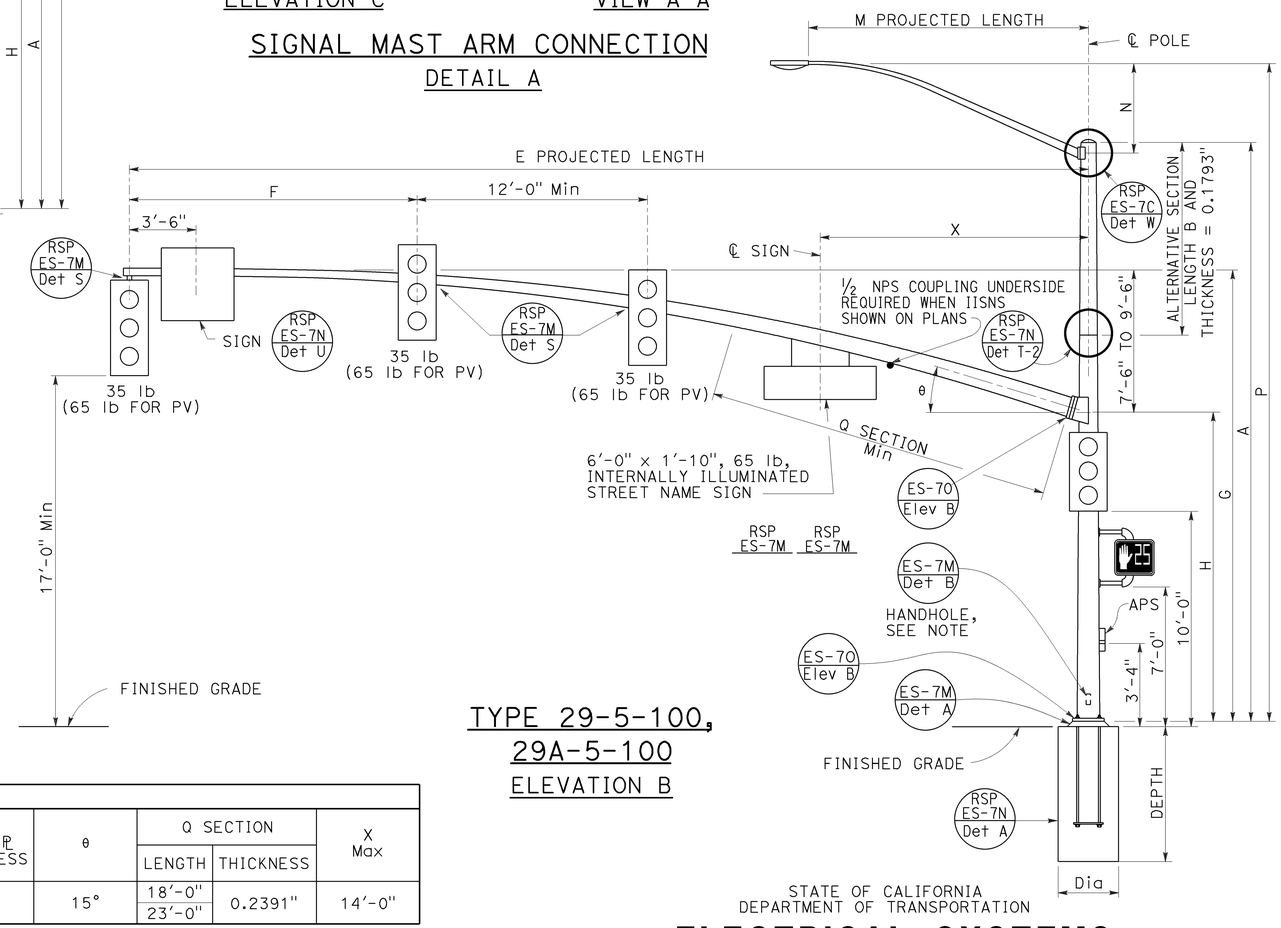

TYPE 29-5-100,
29A-5-100

ELEVATION B

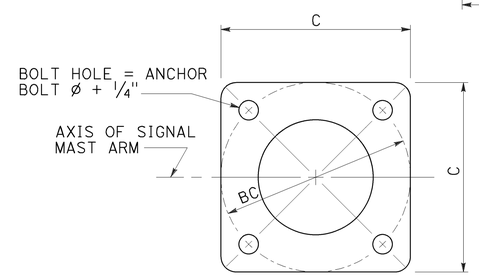

BASE PLATE

DETAIL B

LUMINAIRE MAST ARM DATA					
M PROJECTED LENGTH	N RISE	Min OD AT POLE	THICKNESS	P MOUNTING HEIGHT 30'-0" POLE	P MOUNTING HEIGHT 35'-0" POLE
6'-0"	2'-0"±	3 1/4"	0.1196"	31'-6"±	36'-6"±
8'-0"	2'-6"±	3 1/2"		32'-0"±	37'-0"±
10'-0"	3'-3"±	3 7/8"		32'-9"±	37'-9"±
12'-0"	4'-3"±			33'-9"±	38'-9"±
15'-0"	4'-9"±	4 1/4"		34'-3"±	39'-3"±

SIGNAL MAST ARM DATA														
E PROJECTED LENGTH	F Min SPACING	G MOUNTING HEIGHT	H	Min OD AT POLE	THICKNESS	I BOLT CIRCLE	HS CAP SCREWS	J PLATE SIZE	K MAST ARM ℄ THICKNESS	L POLE ℄ THICKNESS	θ	Q SECTION LENGTH	Q SECTION THICKNESS	X Max
50'-0"	15'-0"	23'-7"± TO 25'-7"±	16'-0"	11 7/16"	0.1793"	16"	1 1/2"-6NC-3 1/4"	1'-4"	1 3/4"	1 3/4"	15°	18'-0"	0.2391"	14'-0"
55'-0"				1'-1/4"								23'-0"		

POLE TYPE	LOAD CASE	WIND VELOCITY (mph)	POLE DATA A HEIGHT	Min OD BASE	Min OD TOP	THICKNESS	ALTERNATIVE SECTION B LENGTH	ALTERNATIVE SECTION BOTTOM	ALTERNATIVE SECTION TOP	BASE PLATE DATA C	BC = BOLT CIRCLE	THICKNESS	ANCHOR BOLT SIZE	LUMINAIRE MAST ARM	SIGNAL MAST ARM	CIDH PILE FOUNDATION Dia	DEPTH	REINFORCED
28-5-100	5	100	17'-0"	14"	11 9/16"	0.3125"	NONE	11 1/8"	9 11/16"	23"	21"	3"	2 1/2" ø x 42"	NONE	50'-0", 55'-0"	3'-6"	12'-0"	YES
29-5-100			30'-0"		9 11/16"		10'-0"							6'-15' 15'-0"				
29A-5-100			35'-0"		8 15/16"		15'-0"		8 15/16"									

INDICATES MAST ARM LENGTH TO BE USED UNLESS OTHERWISE NOTED ON PLANS.

STATE OF CALIFORNIA
DEPARTMENT OF TRANSPORTATION

ELECTRICAL SYSTEMS (SIGNAL AND LIGHTING STANDARD, CASE 5 SIGNAL MAST ARM LOADING, WIND VELOCITY=100 MPH AND SIGNAL MAST ARM LENGTHS 50' TO 55')

NO SCALE

RSP ES-7G DATED OCTOBER 30, 2015 SUPERSEDES RSP ES-7G DATED JULY 19, 2013 AND ES-7G DATED MAY 20, 2011 - PAGE 468 OF THE STANDARD PLANS BOOK DATED 2010.

REVISED STANDARD PLAN RSP ES-7G

2010 REVISED STANDARD PLAN RSP ES-7G

8-24-15

Dist	COUNTY	ROUTE	POST MILES TOTAL PROJECT	SHEET No.	TOTAL SHEETS
08	SBd	18	49.0/51.7	176A	179

4

REGISTERED CIVIL ENGINEER

October 30, 2015
PLANS APPROVAL DATE

REGISTERED PROFESSIONAL ENGINEER
Stanley P. Johnson
No. C57793
Exp. 3-31-16
CIVIL
STATE OF CALIFORNIA

THE STATE OF CALIFORNIA OR ITS OFFICERS OR AGENTS SHALL NOT BE RESPONSIBLE FOR THE ACCURACY OR COMPLETENESS OF SCANNED COPIES OF THIS PLAN SHEET.

TO ACCOMPANY PLANS DATED 6-26-15

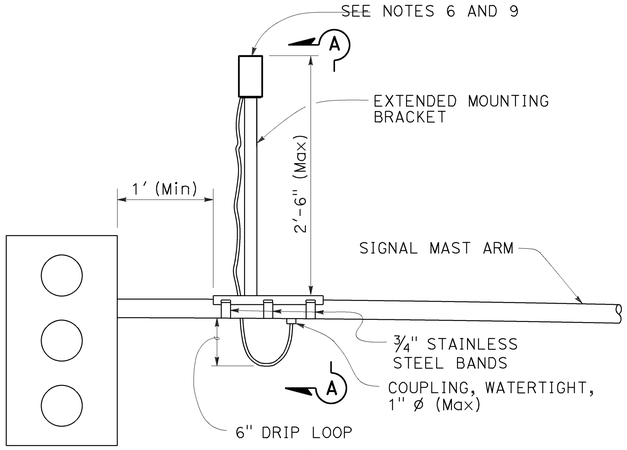

SIGNAL MAST ARM MOUNT

DETAIL A

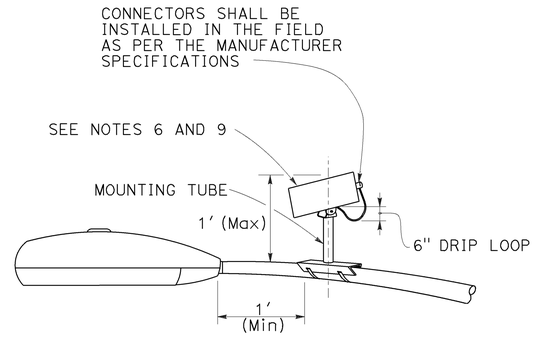

LUMINAIRE MAST ARM MOUNT

DETAIL B

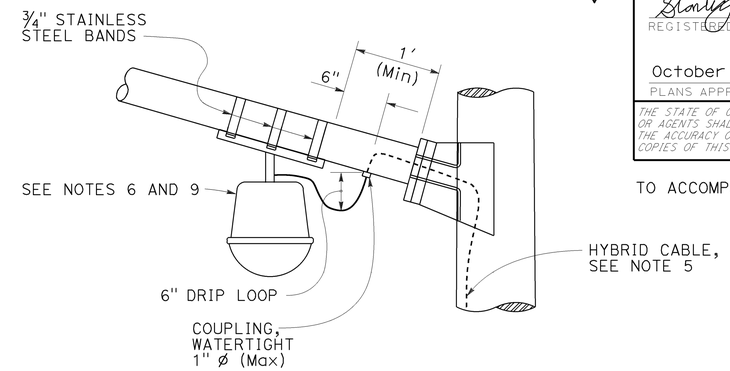

LUMINAIRE MAST ARM MOUNT

DETAIL C

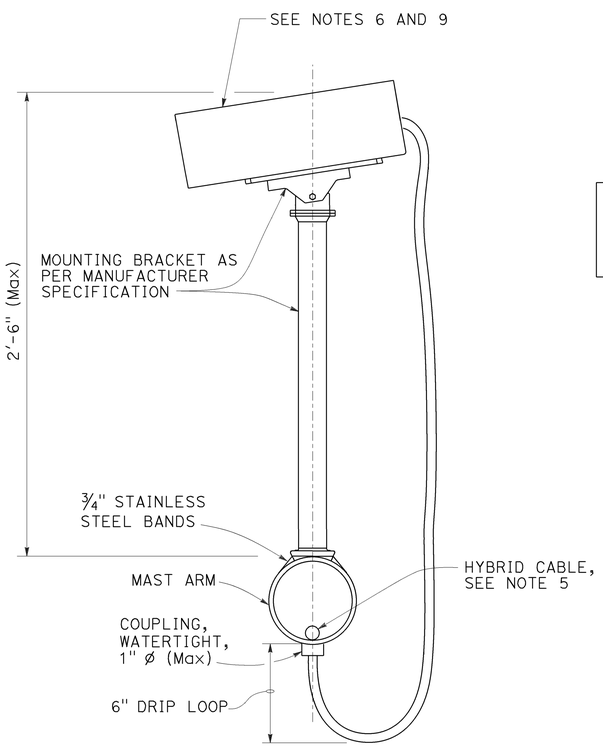

SECTION A-A

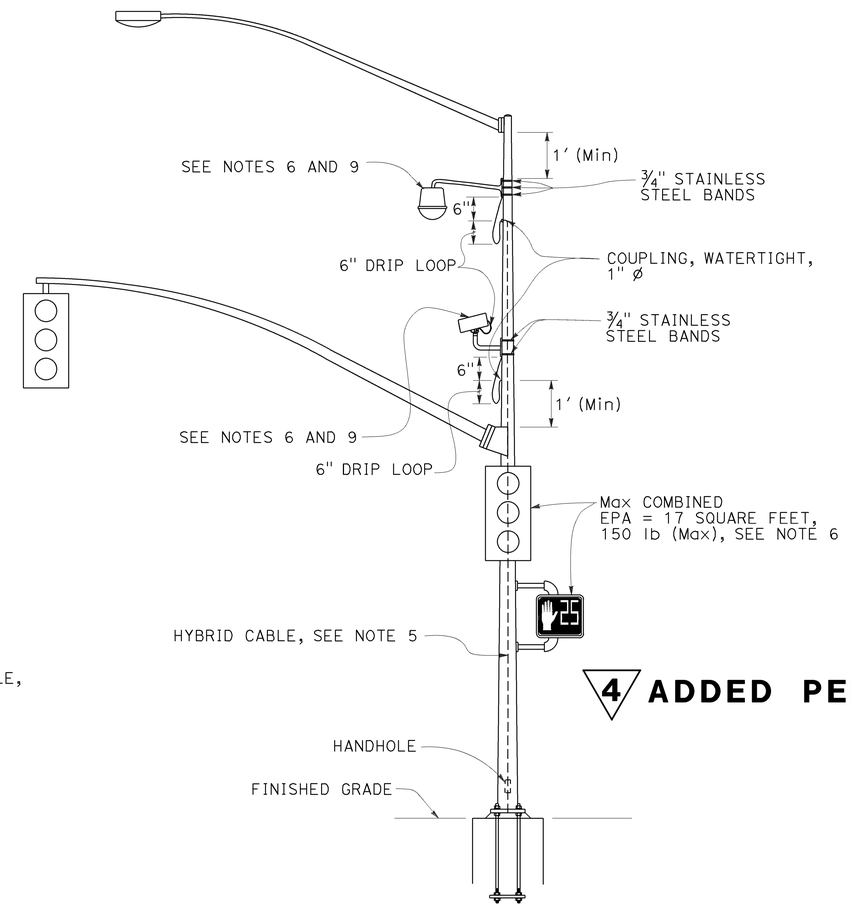

SIGNAL POLE MOUNT

DETAIL D

NOTES:

1. Exact mounting location of miscellaneous attachment and bracket shall be approved by the Engineer per manufacturer's recommendation.
2. Location of cable entrances on signal pole shall be a minimum of 1′ from any flange or base plate.
3. Hybrid cable entrances on signal pole shall be drilled for weathertight coupling as required.
4. Hybrid cable shall have a drip loop at the entrance into signal pole, luminaire mast arm and signal mast arm.
5. A single hybrid cable shall run continuous and shall not be twisted from the miscellaneous attachment to the controller cabinet. No splices shall be allowed.
6. Use the manufacturer's Effective Projected Area (EPA) for miscellaneous attachment. The maximum EPA for each miscellaneous attachment shall be 1.6 square feet with 10 lb Max.
7. Maximum of two miscellaneous attachments per traffic signal standard.
8. Maximum of one miscellaneous attachment per mast arm.
9. Miscellaneous attachment shall be mounted using clamping devices.

4 ADDED PER ADDENDUM No. 4 DATED FEBRUARY 17, 2016

STATE OF CALIFORNIA
DEPARTMENT OF TRANSPORTATION

ELECTRICAL SYSTEMS (SIGNAL AND LIGHTING, MISCELLANEOUS ATTACHMENT)

NO SCALE

RSP ES-7R DATED OCTOBER 30, 2015 SUPERSEDES RSP ES-7R DATED JULY 19, 2013 AND STANDARD PLAN ES-7R DATED MAY 20, 2011 - PAGE 479 OF THE STANDARD PLANS BOOK DATED 2010.

REVISED STANDARD PLAN RSP ES-7R

2010 REVISED STANDARD PLAN RSP ES-7R

8-21-15

4 ADDED PER ADDENDUM No. 4 DATED FEBRUARY 17, 2016

DIST	COUNTY	ROUTE	POST MILES TOTAL PROJECT	SHEET NO.	TOTAL SHEETS
08	SBd	18	49.0/51.7	176B	179

4

Theresa Gabriel
REGISTERED ELECTRICAL ENGINEER

October 30, 2015
PLANS APPROVAL DATE

REGISTERED PROFESSIONAL ENGINEER Theresa Aziz Gabriel No. E15129 Exp. 6-30-16 ELECTRICAL STATE OF CALIFORNIA

THE STATE OF CALIFORNIA OR ITS OFFICERS OR AGENTS SHALL NOT BE RESPONSIBLE FOR THE ACCURACY OR COMPLETENESS OF SCANNED COPIES OF THIS PLAN SHEET.

TO ACCOMPANY PLANS DATED 6-26-15

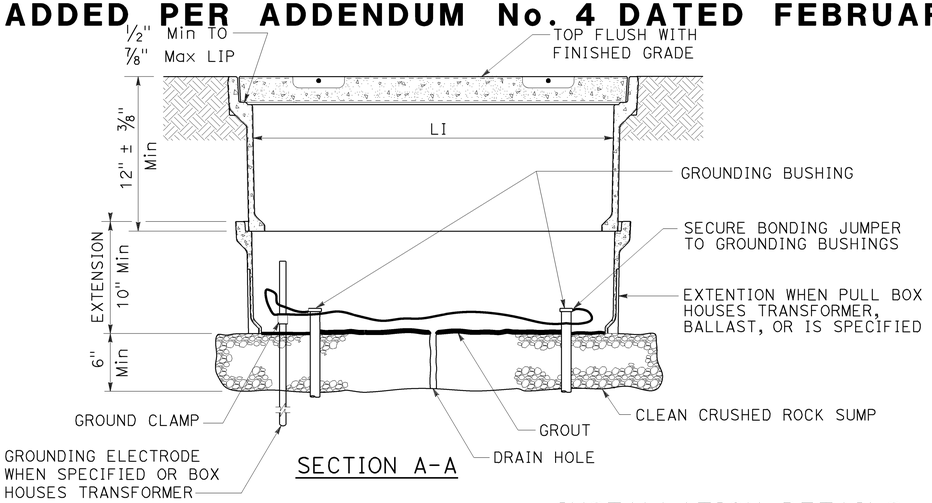

SECTION A-A

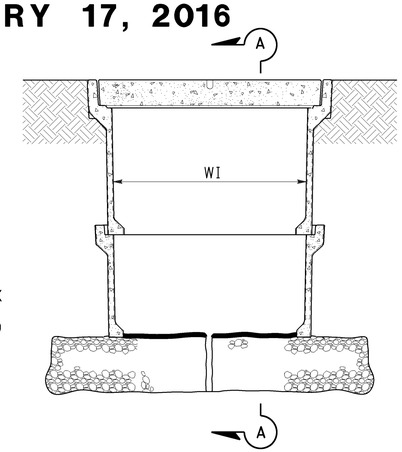

SIDE VIEW

INSTALLATION DETAILS

DETAIL A

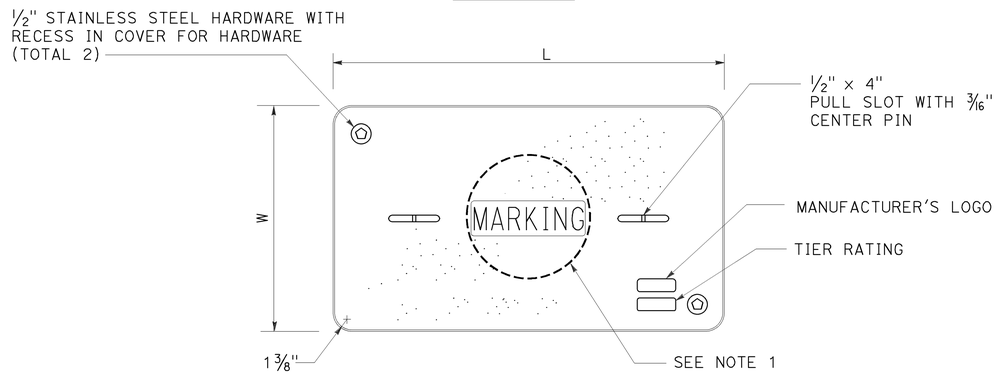

COVER TOP VIEW

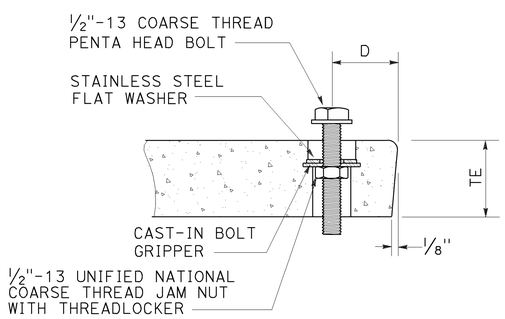

TYPICAL COVER CAPTIVE BOLT

OR SIMILAR

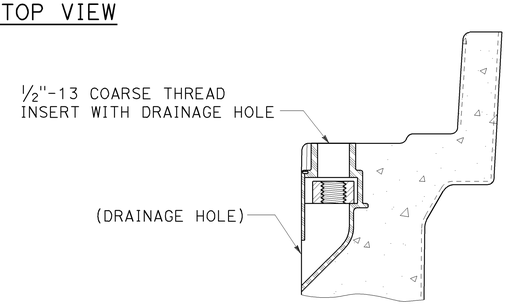

TYPICAL THREADED INSERT

OR SIMILAR

DIMENSION TABLE										
PULL BOX	PULL BOX					COVER				
	MINIMUM DEPTH BOX	MINIMUM DEPTH EXTENSION	MINIMUM WEIGHT	LI Min	WI Min	TE	D	L	W	MINIMUM WEIGHT
No. 3½	12"	N/A	40 lb	1' - 3"	9"	1¾"	1¾"	1'-3¼" - 1'-3⅜"	10" - 10⅛"	30 lb
No. 5	12"	10"	55 lb	1' - 8"	11"	2"	1¾"	1'-11¼"	1'-1¾"	60 lb
No. 6	12"	10"	70 lb	2' - 4¼"	1' - 3¼"	2"	2"	2'-6½"	1'-5½"	85 lb

NOTES:

1. Pull box covers shall be marked as follows: "SERVICE" Service circuits between service point and service disconnect; "SPRINKLER-CONTROL" sprinkler control circuits, 50 V or less; "CALTRANS" on all pull boxes, except pull boxes marked "SPRINKLER-CONTROL"; and "TELEPHONE" Telephone service;
   - A) No. 3½ pull box.
     - 1) "SIGNAL" - Traffic signal circuits with or without lighting or sign lighting circuits.
     - 2) "LIGHTING" - Lighting or sign lighting circuits where voltage is under 600 V.
   - B) No. 5, 6, 9 or 9A pull box.
     - 1) "TRAFFIC SIGNAL" - Traffic signal circuits with or without lighting or sign lighting circuits.
     - 2) "LIGHTING" - Lighting or sign lighting circuits where voltage is under 600 V.
     - 3) "LIGHTING-HIGH VOLTAGE" - Lighting or sign lighting circuits where voltage is above 600 V.
     - 4) "IRRIGATION" - Circuits to irrigation controller 120 V or more.
     - 5) "RAMP METER" - Ramp meter circuits.
     - 6) "COUNT STATION" - Count or speed monitor circuits.
     - 7) "COMMUNICATIONS" - Communication circuits.
     - 8) "TOS COMMUNICATIONS" - TOS communication line.
     - 9) "TOS POWER" - TOS power.
     - 10) "TDC POWER" - Telephone demarcation cabinet power.
     - 11) "CCTV" - Closed circuit television circuits.
     - 12) "TMS" - Traffic monitoring station circuits.
     - 13) "CMS" - Changeable message sign circuits.
     - 14) "HAR" - Highway advisory radio circuits.
     - 15) "BOOSTER PUMP" - Booster pump circuit.
2. The nominal dimensions of the opening in which the cover sets shall be the same as the cover dimensions except the length and width dimensions shall be ⅛" greater.
3. Covers and boxes shall be interchangeable with California standard male and female gages. When interchanged with a standard male or female gage, the top surfaces shall be flush within ⅛". Top outside radius of covers and pull boxes shall have a ⅛" radius.
4. Pull box extension may be another pull box as long as the bottom edge of the pull box can fit into the cover opening.
5. Dimensions for the cover for non-traffic pull box are nominal values.

STATE OF CALIFORNIA
DEPARTMENT OF TRANSPORTATION

ELECTRICAL SYSTEMS (NON-TRAFFIC PULL BOX)

NO SCALE

RSP ES-8A DATED OCTOBER 30, 2015 SUPERSEDES RSP ES-8A DATED JULY 19, 2013 AND RSP ES-8A DATED JANUARY 20, 2012 THAT SUPPLEMENTS THE STANDARD PLANS BOOK DATED 2010.

REVISED STANDARD PLAN RSP ES-8A

2010 REVISED STANDARD PLAN RSP ES-8A

8-25-15

Dist	COUNTY	ROUTE	POST MILES TOTAL PROJECT	SHEET No.	TOTAL SHEETS
08	SBd	18	49.0/51.7	177	179

Theresa Gabriel
REGISTERED ELECTRICAL ENGINEER

October 30, 2015
PLANS APPROVAL DATE

REGISTERED PROFESSIONAL ENGINEER
Theresa Aziz Gabriel
No. E15129
Exp. 6-30-16
ELECTRICAL
STATE OF CALIFORNIA

THE STATE OF CALIFORNIA OR ITS OFFICERS OR AGENTS SHALL NOT BE RESPONSIBLE FOR THE ACCURACY OR COMPLETENESS OF SCANNED COPIES OF THIS PLAN SHEET.

TO ACCOMPANY PLANS DATED 6-26-15

NOTE:
Curves represent the minimum footcandle (FC).

4

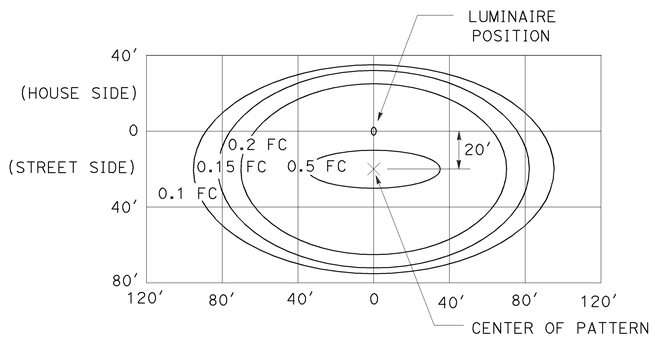

LED LUMINAIRE 165 W
34′ Mounting Height

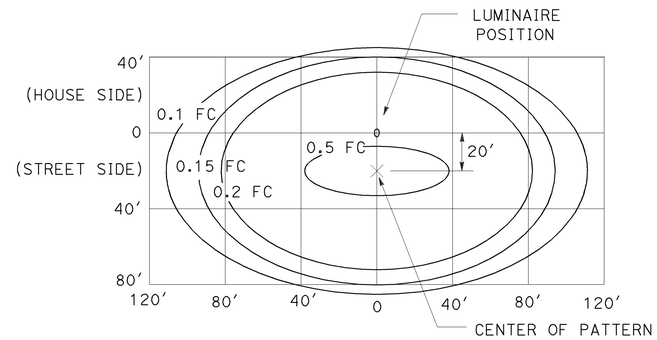

LED LUMINAIRE 235 W
40′ Mounting Height

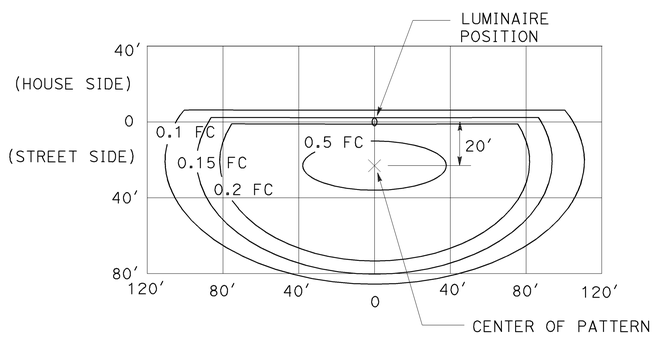

LED LUMINAIRE 235 W
40′ Mounting Height
with back side control

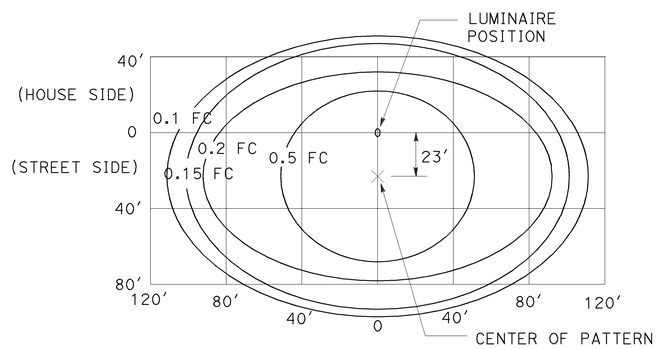

LED LUMINAIRE 300 W
40′ Mounting Height

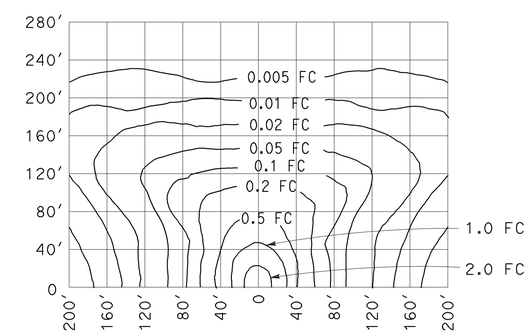

LOW-PRESSURE SODIUM LUMINAIRE 180 W
40′ Mounting Height
Lamp operated at 33,000 lm

STATE OF CALIFORNIA
DEPARTMENT OF TRANSPORTATION

ELECTRICAL SYSTEMS (ISOFOOTCANDLE CURVES)

NO SCALE

RSP ES-10A DATED OCTOBER 30, 2015 SUPERSEDES RSP ES-10A DATED JULY 19, 2013 THAT SUPPLEMENTS THE STANDARD PLANS BOOK DATED 2010.

4 REPLACED PER ADDENDUM No. 4 DATED FEBRUARY 17, 2016

REVISED STANDARD PLAN RSP ES-10A

2010 REVISED STANDARD PLAN RSP ES-10A

9-29-15