DIST	COUNTY	ROUTE	POST MILES TOTAL PROJECT	SHEET No	TOTAL SHEETS
03, 08	Sac, SBd	5, 15	23.3, R107.3	201	330

K. Douglas Cook — CERTIFIED ENGINEERING GEOLOGIST — 4-13-10 DATE

9-16-13
PLANS APPROVAL DATE

REGISTERED PROFESSIONAL GEOLOGIST — Douglas K. Cook — No. 1391 — Exp. 10-31-12 — CERTIFIED ENGINEERING GEOLOGIST — STATE OF CALIFORNIA

The State of California or its officers or agents shall not be responsible for the accuracy or completeness of electronic copies of this plan sheet.

REFERENCE: CALTRANS SOIL & ROCK LOGGING, CLASSIFICATION, AND PRESENTATION MANUAL (JUNE 2007)

CEMENTATION

Description	Criteria
Weak	Crumbles or breaks with handling or little finger pressure.
Moderate	Crumbles or breaks with considerable finger pressure.
Strong	Will not crumble or break with finger pressure.

CONSISTENCY OF COHESIVE SOILS

Description	Unconfined Compressive Strength (tsf)	Pocket Penetrometer Measurement (tsf)	Torvane Measurement (tsf)	Field Approximation
Very Soft	< 0.25	< 0.25	< 0.12	Easily penetrated several inches by fist
Soft	0.25 to 0.50	0.25 to 0.50	0.12 to 0.25	Easily penetrated several inches by thumb
Medium Stiff	0.50 to 1.0	0.50 to 1.0	0.25 to 0.50	Penetrated several inches by thumb with moderate effort
Stiff	1 to 2	1 to 2	0.50 to 1.0	Readily indented by thumb but penetrated only with great effort
Very Stiff	2 to 4	2 to 4	1.0 to 2.0	Readily indented by thumbnail
Hard	> 4.0	> 4.0	> 2.0	Indented by thumbnail with difficulty

BOREHOLE IDENTIFICATION

Symbol	Hole Type	Description
Size	A	Auger Boring
Size	R P	Rotary drilled boring Rotary percussion boring (air)
Size	R	Rotary drilled diamond core
Size	HD HA	Hand driven (1-inch soil tube) Hand Auger
●	D	Dynamic Cone Penetration Boring
▲	CPT	Cone Penetration Test (ASTM D 5778-95)
⬚	O	Other

Note: Size in inches.

PLASTICITY OF FINE-GRAINED SOILS

Description	Criteria
Nonplastic	A 1/8-inch thread cannot be rolled at any water content.
Low	The thread can barely be rolled and the lump cannot be formed when drier than the plastic limit.
Medium	The thread is easy to roll and not much time is required to reach the plastic limit. The thread cannot be rerolled after reaching the plastic limit. The lump crumbles when drier than the plastic limit.
High	It takes considerable time rolling and kneading to reach the plastic limit. The thread can be rerolled several times after reaching the plastic limit. The lump can be formed without crumbling when drier than the plastic limit.

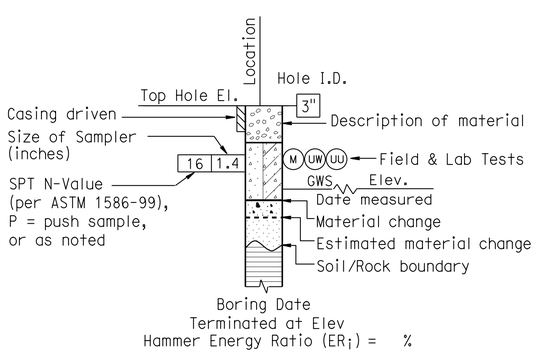

ROTARY BORING

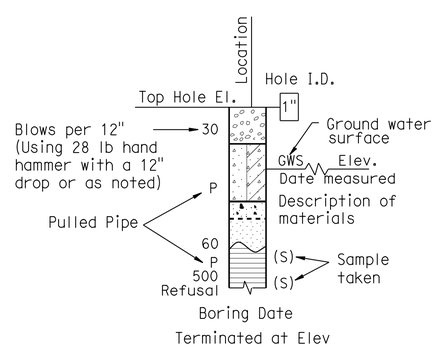

HAND BORING

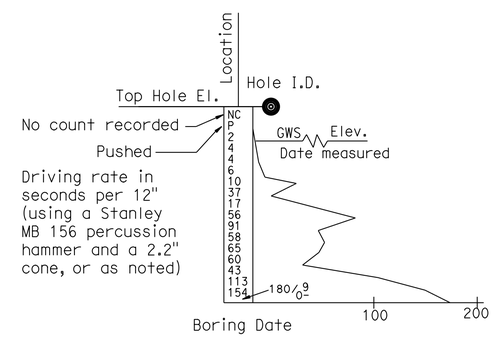

DYNAMIC CONE PENETRATION BORING

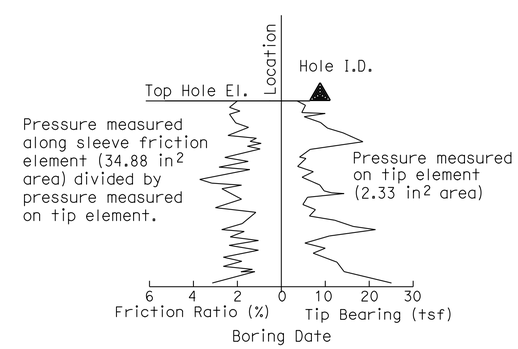

CONE PENETRATION TEST (CPT) SOUNDING

ENGINEERING SERVICES	GEOTECHNICAL SERVICES	STATE OF CALIFORNIA DEPARTMENT OF TRANSPORTATION	DIVISION OF ENGINEERING SERVICES STRUCTURE DESIGN DESIGN BRANCH	BRIDGE NO. / POST MILE 107.3	C.V. KANE SRRA LOG OF TEST BORINGS 3 OF 4
	PREPARED BY: W. Tang 01/10				

GS LOTB SOIL LEGEND

ORIGINAL SCALE IN INCHES FOR REDUCED PLANS 0 1 2 3

CU 08
EA 0G8401

DISREGARD PRINTS BEARING EARLIER REVISION DATES

REVISION DATES | SHEET | OF

FILE => st_Log03_of_04.dgn

USERNAME => s109858 DATE PLOTTED => 18-SEP-2013 TIME PLOTTED => 14:01

REFERENCE: CALTRANS SOIL & ROCK LOGGING, CLASSIFICATION, AND PRESENTATION MANUAL (JUNE 2007)

DIST	COUNTY	ROUTE	POST MILES TOTAL PROJECT	SHEET No	TOTAL SHEETS
03, 08	Sac, SBd	5, 15	23.3, R107.3	202	330

K. Douglas Cook 4-13-10
CERTIFIED ENGINEERING GEOLOGIST DATE

9-16-13
PLANS APPROVAL DATE

REGISTERED PROFESSIONAL GEOLOGIST — Douglas K. Cook — No. 1391 — Exp. 10-31-12 — CERTIFIED ENGINEERING GEOLOGIST — STATE OF CALIFORNIA

The State of California or its officers or agents shall not be responsible for the accuracy or completeness of electronic copies of this plan sheet.

GROUP SYMBOLS AND NAMES

Graphic/Symbol	Group Names
GW	Well-graded GRAVEL Well-graded GRAVEL with SAND
GP	Poorly graded GRAVEL Poorly graded GRAVEL with SAND
GW-GM	Well-graded GRAVEL with SILT Well-graded GRAVEL with SILT and SAND
GW-GC	Well-graded GRAVEL with CLAY (or SILTY CLAY) Well-graded GRAVEL with CLAY and SAND (or SILTY CLAY and SAND)
GP-GM	Poorly graded GRAVEL with SILT Poorly graded GRAVEL with SILT and SAND
GP-GC	Poorly graded GRAVEL with CLAY (or SILTY CLAY) Poorly graded GRAVEL with CLAY and SAND (or SILTY CLAY and SAND)
GM	SILTY GRAVEL SILTY GRAVEL with SAND
GC	CLAYEY GRAVEL CLAYEY GRAVEL with SAND
GC-GM	SILTY, CLAYEY GRAVEL SILTY, CLAYEY GRAVEL with SAND
SW	Well-graded SAND Well-graded SAND with GRAVEL
SP	Poorly graded SAND Poorly graded SAND with GRAVEL
SW-SM	Well-graded SAND with SILT Well-graded SAND with SILT and GRAVEL
SW-SC	Well-graded SAND with CLAY (or SILTY CLAY) Well-graded SAND with CLAY and GRAVEL (or SILTY CLAY and GRAVEL)
SP-SM	Poorly graded SAND with SILT Poorly graded SAND with SILT and GRAVEL
SP-SC	Poorly graded SAND with CLAY (or SILTY CLAY) Poorly graded SAND with CLAY and GRAVEL (or SILTY CLAY and GRAVEL)
SM	SILTY SAND SILTY SAND with GRAVEL
SC	CLAYEY SAND CLAYEY SAND with GRAVEL
SC-SM	SILTY, CLAYEY SAND SILTY, CLAYEY SAND with GRAVEL
PT	PEAT
	COBBLES COBBLES and BOULDERS BOULDERS

Graphic/Symbol	Group Names
CL	Lean CLAY Lean CLAY with SAND Lean CLAY with GRAVEL SANDY lean CLAY SANDY lean CLAY with GRAVEL GRAVELLY lean CLAY GRAVELLY lean CLAY with SAND
CL-ML	SILTY CLAY SILTY CLAY with SAND SILTY CLAY with GRAVEL SANDY SILTY CLAY SANDY SILTY CLAY with GRAVEL GRAVELLY SILTY CLAY GRAVELLY SILTY CLAY with SAND
ML	SILT SILT with SAND SILT with GRAVEL SANDY SILT SANDY SILT with GRAVEL GRAVELLY SILT GRAVELLY SILT with SAND
OL	ORGANIC lean CLAY ORGANIC lean CLAY with SAND ORGANIC lean CLAY with GRAVEL SANDY ORGANIC lean CLAY SANDY ORGANIC lean CLAY with GRAVEL GRAVELLY ORGANIC lean CLAY GRAVELLY ORGANIC lean CLAY with SAND
OL	ORGANIC SILT ORGANIC SILT with SAND ORGANIC SILT with GRAVEL SANDY ORGANIC SILT SANDY ORGANIC SILT with GRAVEL GRAVELLY ORGANIC SILT GRAVELLY ORGANIC SILT with SAND
CH	Fat CLAY Fat CLAY with SAND Fat CLAY with GRAVEL SANDY fat CLAY SANDY fat CLAY with GRAVEL GRAVELLY fat CLAY GRAVELLY fat CLAY with SAND
MH	Elastic SILT Elastic SILT with SAND Elastic SILT with GRAVEL SANDY elastic SILT SANDY elastic SILT with GRAVEL GRAVELLY elastic SILT GRAVELLY elastic SILT with SAND
OH	ORGANIC fat CLAY ORGANIC fat CLAY with SAND ORGANIC fat CLAY with GRAVEL SANDY ORGANIC fat CLAY SANDY ORGANIC fat CLAY with GRAVEL GRAVELLY ORGANIC fat CLAY GRAVELLY ORGANIC fat CLAY with SAND
OH	ORGANIC elastic SILT ORGANIC elastic SILT with SAND ORGANIC elastic SILT with GRAVEL SANDY ORGANIC elastic SILT SANDY ORGANIC elastic SILT with GRAVEL GRAVELLY ORGANIC elastic SILT GRAVELLY ORGANIC elastic SILT with SAND
OL/OH	ORGANIC SOIL ORGANIC SOIL with SAND ORGANIC SOIL with GRAVEL SANDY ORGANIC SOIL SANDY ORGANIC SOIL with GRAVEL GRAVELLY ORGANIC SOIL GRAVELLY ORGANIC SOIL with SAND

FIELD AND LABORATORY TESTING

- (C) Consolidation (ASTM D 2435)
- (CL) Collapse Potential (ASTM D 5333)
- (CP) Compaction Curve (CTM 216)
- (CR) Corrosivity Testing (CTM 643, CTM 422, CTM 417)
- (CU) Consolidated Undrained Triaxial (ASTM D 4767)
- (DS) Direct Shear (ASTM D 3080)
- (EI) Expansion Index (ASTM D 4829)
- (M) Moisture Content (ASTM D 2216)
- (OC) Organic Content-% (ASTM D 2974)
- (P) Permeability (CTM 220)
- (PA) Particle Size Analysis (ASTM D 422)
- (PI) Plasticity Index (AASHTO T 90) Liquid Limit (AASHTO T 89)
- (PL) Point Load Index (ASTM D 5731)
- (PM) Pressure Meter
- (PP) Pocket Penetrometer
- (R) R-Value (CTM 301)
- (SE) Sand Equivalent (CTM 217)
- (SG) Specific Gravity (AASHTO T 100)
- (SL) Shrinkage Limit (ASTM D 427)
- (SW) Swell Potential (ASTM D 4546)
- (TV) Pocket Torvane
- (UC) Unconfined Compression-Soil (ASTM D 2166) Unconfined Compression-Rock (ASTM D 2938)
- (UU) Unconsolidated Undrained Triaxial (ASTM D 2850)
- (UW) Unit Weight (ASTM D 4767)
- (VS) Vane Shear (AASHTO T 223)

APPARENT DENSITY OF COHESIONLESS SOILS

Description	SPT N_{60} (Blows / 12 inches)
Very loose	0 - 4
Loose	5 - 10
Medium Dense	11 - 30
Dense	31 - 50
Very Dense	> 50

MOISTURE

Description	Criteria
Dry	Absence of moisture, dusty, dry to the touch
Moist	Damp but no visible water
Wet	Visible free water, usually soil is below water table

PERCENT OR PROPORTION OF SOILS

Description	Criteria
Trace	Particles are present but estimated to be less than 5%
Few	5 to 10%
Little	15 to 25%
Some	30 to 45%
Mostly	50 to 100%

PARTICLE SIZE

Description		Size
Boulder		> 12"
Cobble		3" to 12"
Gravel	Coarse	3/4" to 3"
	Fine	No. 4 to 3/4"
Sand	Coarse	No. 10 to No. 4
	Medium	No. 40 to No. 10
	Fine	No. 200 to No. 40

ENGINEERING SERVICES

GEOTECHNICAL SERVICES
PREPARED BY: W. Tang 01/10

STATE OF CALIFORNIA
DEPARTMENT OF TRANSPORTATION

DIVISION OF ENGINEERING SERVICES
STRUCTURE DESIGN
DESIGN BRANCH __ __

BRIDGE NO.
POST MILE 107.3

C.V. KANE SRRA
LOG OF TEST BORINGS 4 OF 4

GS LOTB SOIL LEGEND

ORIGINAL SCALE IN INCHES FOR REDUCED PLANS 0 1 2 3

CU 08
EA 0G8401

DISREGARD PRINTS BEARING EARLIER REVISION DATES

REVISION DATES

SHEET OF

FILE => st_Log04_of_04.dgn

USERNAME => s103858 DATE PLOTTED => 18-SEP-2013 TIME PLOTTED => 14:01

Dist	COUNTY	ROUTE	POST MILES TOTAL PROJECT	SHEET No.	TOTAL SHEETS
03, 08	Sac, SBd	5, 15	23.3, R107.3	203	330

ACCESSIBILITY DESIGN APPROVAL STAMP
DOT / DES / OTA
PROJECT ID
0800000229
Reviewed by:
Date: 10-25-11

CALIFORNIA STATE FIRE MARSHAL
APPROVED
Approval of this plan does not authorize or approve any omission or deviation from applicable regulations. Final approval is subject to field inspection. One set of approved plans shall be available on the project site at all times.
Reviewed by: FRANCIS SOLICH
Approval date: 09-11-13

08-16-13
REGISTERED ELECTRICAL MECHANICAL DATE

9-16-13
PLANS APPROVAL DATE

REGISTERED PROFESSIONAL ENGINEER
MARK HEDGLIN
No. M32912
Exp. 09-30-14
MECH
STATE OF CALIFORNIA

The State of California or its officers or agents shall not be responsible for the accuracy or completeness of scanned copies of this plan sheet.

PLUMBING

- POTABLE WATER
- A — COMPRESSED AIR
- F — FIRE SERVICE WATER LINE
- G — GAS
- D — RAINWATER DRAIN
- RD — ROOF DRAIN
- OD — OVERFLOW DRAIN
- RWL — RAIN WATER LEADER
- HOT WATER
- RAW WATER
- R — RELIEF VALVE DISCHARGE PIPE
- S — SEWER LINE
- SANITARY SEWER (ABOVE GRADE)
- SEWER LINE
- SANITARY SEWER VENT
- WC — WASTE COOLANT
- WO — WASTE OIL

PIPE FITTINGS AND VALVES

- CAP, THREADED
- ELBOW, TURNED DOWN
- ELBOW, TURNED UP
- REDUCER, CONCENTRIC
- PRESSURE GAUGE
- STRAINER
- UNION
- UNION, INSULATING
- VALVE, BALL
- VALVE, CHECK
- VALVE, GAS
- VALVE, GATE
- VALVE, SAFETY RELIEF
- VALVE, PRESSURE REDUCING
- VALVE, PRESSURE/TEMPERATURE RELIEF
- WATER HAMMER ARRESTOR

HEATING, VENTILATING AND AIR CONDITIONING

- BALANCE DAMPER
- FLEXIBLE DUCT
- EA — EXHAUST AIR
- RA — RETURN AIR
- SA — SUPPLY AIR
- SIZE — EXHAUST REGISTER
- or SIZE — RETURN REGISTER, SEE NOTE
- or SIZE CFM — SUPPLY DIFFUSER, SEE NOTE
- T — THERMOSTAT
- TS — TIME SWITCH
- EF — EXHAUST FAN
- FE — FIRE EXTINGUISHER
- CHLF — COMBINATION HEAT, LIGHT AND FAN UNIT

MISCELLANEOUS

- L — ANGLE
- ℄ — CENTERLINE
- Ø — DIAMETER
- SECTION / ELEVATION LETTER
- SHEET NUMBER
- DETAIL NUMBER
- SHEET NUMBER

MECHANICAL ABBREVIATIONS:

A/C	AIR CONDITIONING
ABS	ACRYLONTIRLE BUTADIENE STYRENE
AC	AIR COMPRESSOR
AD	COMPRESSED AIR DROP
AP	ALTERNATIVE PIPE
ATF	AUTOMATIC TRANSMISSION FLUID
BFP	BACKFLOW PREVENTER
BLDG	BUILDING
BTU	BRITISH THERMAL UNIT
BTUH	BRITISH THERMAL UNIT PER HOUR
BV	BALANCING VALVE
C	CONDUIT
CA	COMPRESSED AIR
CEF	EXHAUST FAN (CEILING MOUNTED)
CHLF	COMBINATION HEAT/LIGHT/FAN UNIT
CG	CHASSIS GREASE
CO	CLEANOUT
COTF	CLEANOUT THROUGH FLOOR
COTG	CLEANOUT THROUGH GRADE
COTW	CLEANOUT TO WALL
CV	CHECK VALVE
CW	COLD WATER
CFM	CUBIC FEET PER MINUTE
DEF	INDUSTRIAL VENTILATION FAN (WALL MOUNTED)
Dia.	DIAMETER
DWV	DRAIN/WASTE/VENT
DB	DRY BULB
DF	DRINKING FOUNTAIN
DH	DUCT HEATER
(E)	EXISTING
EA	EXHAUST AIR
EEW	EMERGENCY EYEWASH AND SHOWER
EO	ENGINE OIL
WEF	EXHAUST FAN (WALL MOUNTED)
EL	ELEVATION
EC	EVAPORATIVE COOLER
ECL	ENGINE COOLANT
EFW	WELDING EXHAUST FAN
EWC	ELECTRIC WATER COOLER
EWH	ELECTRIC WATER HEATER
^{O}F	FAHRENHEIT
FC	FLEXIBLE CONNECTION
FD	FLOOR DRAIN
FDC	FIRE DEPARTMENT CONNECTION
FE	FIRE EXTINGUISHER
FG	FINISH GRADE
FL	FLOW LINE
FH	FIRE HYDRANT
FS	FLOW SWITCH
FTR	FLUE THROUGH ROOF
GA	GAUGE
GALV	GALVANIZED
GH	GROUND HYDRANT
GLV	GLOBE VALVE
GO	GEAR OIL
GPM	GALLONS PER MINUTE
GSP	GALVANIZED STEEL PIPE
GV	GATE VALVE
GWH	GAS WATER HEATER
GYP	GYPSUM
H	HEIGHT
HO	HYDRAULIC OIL
H/C	HOT WATER, HIGH PRESSURE CLEANER
HF	HOSE FAUCET
HVAC	HEATING, VENTILATING AND AIR CONDITIONING
HW	HOT WATER
HZ	HERTZ
I.D.	INSIDE DIAMETER
I.E.	INVERT ELEVATION
IN	INCH
IPS	INTERNATIONAL PIPE STANDARD
KS	KITCHEN SINK
kW	KILOWATT
LAV	LAVATORY
LPG	LIQUIFIED PETROLEUM GAS
L/s	LITERS PER SECOND
MAX	MAXIMUM
MAN	MANHOLE
MIN	MINIMUM
MS	MOP SINK
(N)	NEW
NIC	NOT IN CONTRACT
NO	NUMBER
NPT	NATIONAL PIPE THREAD
NST	NATIONAL STANDARD THREAD
NPS	NOMINAL PIPE SIZE
OA	OUTSIDE AIR
OC	ON CENTER
OD	OUTSIDE DIAMETER
OG	ORIGINAL GROUND
PH	PHASE
POC	POINT OF CONNECTION
PVC	POLYVINYL CHLORIDE
PCC	PORTLAND CEMENT CONCRETE
PSI	POUNDS PER SQUARE INCH
PRV	PRESSURE REDUCING VALVE
REF	ROOF FAN
REFR	REFRIGERATOR
REG	REGISTER
RCP	REINFORCED CONCRETE PIPE
RV	RELIEF VALVE
REQ	REQUIRED
RA	RETURN AIR
RD	ROOF DRAIN
SDS	SANITARY DUMP STATION
SS	SANITARY SEWER
SCH	SCHEDULE
S/S	SERVICE SINK
SHR	SHOWER
STD	STANDARD
S. P.	STATIC PRESSURE
STA	STATION
SA	SUPPLY AIR
SF	SUPPLY FAN
TCV	TEMPERATURE CONTROL VALVE
TP	TRAP PRIMER
TOT	TOTAL
TS	TIME SWITCH
TYP	TYPICAL
UH	UNIT HEATER
UR	URINAL
V	VENT
VAC	VOLTAGE, ALTERNATING CURRENT
VEHR	EXHAUST EVACUATION HOSE REEL
VERF	EXHAUST EVACUATION HOSE REEL & FAN
VEF	EXHAUST EVACUATION FAN
VSF	VESTIBULE SUPPLY FAN
VR	VENT RISER
VTR	VENT THRU ROOF
W	WIDTH
W/	WITH
W/O	WITHOUT
WB	WET BULB
WC	WATER CLOSET
WCL	WASTE COOLANT
W.C.	WATER COLUMN
WEF	EXHAUST FAN (WALL MOUNTED)
WHA	WATER HAMMER ARRESTOR
W.H.	WALL HYDRANT
WLS	WATER LEVEL SWITCH
WP	WEATHERPROOF
WS	WASH SINK
WSP	WELDED STEEL PIPE

THIS DRAWING ACCURATE FOR MECHANICAL WORK ONLY

	BY	CHECKED
DESIGN	Mark Hedglin	Seve Gutierrez
DETAILS	Mark Hedglin	Seve Gutierrez
QUANTITIES	Mark Hedglin	Seve Gutierrez

STATE OF CALIFORNIA
DEPARTMENT OF TRANSPORTATION

DIVISION OF ENGINEERING SERVICES
ELECTRICAL-MECHANICAL-WATER AND WASTEWATER DESIGN

BRIDGE NO. 540004R/L
POST MILE R 107.3

C.V. KANE
SAFETY ROADSIDE REST AREA REHABILITATION
MECHANICAL LEGEND

SHEET M0-0

TAEMWW imperial Rev. 3/12
FILE => m0_0.dgn
DATE PLOTTED => 18-SEP-2013 TIME PLOTTED => 14:01
ORIGINAL SCALE IN INCHES FOR REDUCED PLANS 0 1 2 3
UNIT 3615
PROJECT NUMBER & PHASE 08000002291
EA 000000
DISREGARD PRINTS BEARING EARLIER REVISION DATES
REVISION DATES (PRELIMINARY STAGE ONLY) 10-15-09 12-17-09 02-19-10 04-15-10 10-28-10 11-18-10 02-11-11 02-11-11 01-05-12 08-16-13
SHEET OF

USERNAME => s109858 DATE PLOTTED => 18-SEP-2013 TIME PLOTTED => 14:01

Dist	COUNTY	ROUTE	POST MILES TOTAL PROJECT	SHEET No.	TOTAL SHEETS
03, 08	Sac, SBd	5, 15	23.3, R107.3	204	330

08-16-13
REGISTERED ELECTRICAL MECHANICAL DATE

9-16-13
PLANS APPROVAL DATE

REGISTERED PROFESSIONAL ENGINEER MARK HEDGLIN No. M32912 Exp. 09-30-14 MECH STATE OF CALIFORNIA

The State of California or its officers or agents shall not be responsible for the accuracy or completeness of scanned copies of this plan sheet.

ACCESSIBILITY DESIGN APPROVAL STAMP DOT / DES / OTA
PROJECT ID **0800000229**
Reviewed by:
Date: 10-25-11

CALIFORNIA STATE FIRE MARSHAL APPROVED
Approval of this plan does not authorize or approve any omission or deviation from applicable regulations. Final approval is subject to field inspection. One set of approved plans shall be available on the project site at all times.
Reviewed by: FRANCIS SOLICH
Approval date: 09-11-13

CERTIFICATE OF COMPLIANCE AND FIELD INSPECTION ENERGY CHECKLIST (Part 5 of 5) MECH-1C

Project Name: C.V. Kane Safety Roadside Rest Area Rehabilitation
Date: 2/11/11

Documentation Author's Declaration Statement

✖ I Certify That This Certificate of Compliance Documentation is Accurate and Complete.

Name: Mark Hedglin	Signature: Mark Hedglin
Company: *Department of Transportation, (CALTRANS)*	Date: 2/11/11
Address: *1801 30th Street*	If Applicable CEA# CEPE#
City/State/Zip: *Sacramento, CA 95816*	Phone: (916) 227-8541

Principal Mechanical Designer's Declaration Statement

- I am eligible under Division 3 of the Business and Professions Code to accept responsibility for the mechanical design.
- This Certificate of Compliance identifies the mechanical features and performance specifications required for compliance with Title 24, Parts 1 and 6 of the California Code of Regulations.
- The design features represented on this Certificate of Compliance are consistent with the information provided to document this design on the other applicable compliance forms, worksheets, calculations,plans and specifications submitted to the enforcement agency for approval with this building permit application.

Name: Mark Hedglin	Signature: Mark Hedglin
Company: *Department of Transportation, (CALTRANS)*	Date: 2/11/11
Address: *1801 30th Street*	License# M32912
City/State/Zip: *Sacramento, CA 95816*	Phone: (916) 227-8541

Mandatory Measures

Indicate location on building plans of Note Block for Manatory Measures: *On File*

MECHANICAL COMPLIANCE FORMS & WORKSHEETS (Check box if worksheet is included)

For detailed instructions on the use of this and all Energy Efficiency Standards compliance forms, refer to the 2008 Nonresidential Manual Note: The Enforcement Agency may require all forms to be incorporated onto the building plans.

☒	MECH-1C	Certificate of Compliance. Required on plans for all submittals.
☐	MECH-2C	Mechanical Equipment Summary is required for all submittals.
☐	MECH-3C	Mechanical Ventilation and Reheat is required for all submittals with mechanical ventilation.
☐	MECH-4C	Fan Power Consumption is required for all prescriptive submittals.

2008 Nonresidential Compliance Forms — *August 2009*

CERTIFICATE OF COMPLIANCE AND FIELD INSPECTION ENERGY CHECKLIST ENV -1C (Part 4 of 4)

Project Name: C.V. Kane S.R.R.A Rehabilitation
Date: 2/11/11
Climate Zone: 14

Documentation Author's Declaration Statement

- I Certify That This Certificate of Compliance Documentation is Accurate and Complete.

Name: Mark Hedglin	Signature: Mark Hedglin
Company: *Department of Transportation, (CALTRANS)*	Date: 2/11/11
Address: *1801 30th Street*	If Applicable: CEA# CEPE#
City/State/Zip: *Sacramento, CA 95816*	Phone: (916) 227-8541

Principal Designer's Declaration Statement

- I am eligible under Division 3 of the California Business and Professions Code to accept responsibility for the design.
- This Certificate of Compliance identifies the envelope features and performance specifications required for compliance with Title 24, Parts 1 and 6 of the California Code of Regulations.
- The design features represented on this Certificate of Compliance are consistent with the information provided to document this design on the other applicable compliance forms, worksheets, calculations,plans and specifications submitted to the enforcement agency for approval with this building permit application.

Name: Janus Pietrzak	Signature:
Company: *Department of Transportation, (CALTRANS)*	Date: 2/11/11
Address: *1801 30th Street*	License# C23915
City/State/Zip: *Sacramento, CA 95816*	Phone: (916) 227-0408

Envelope Mandatory Measures

Indicate location on building plans of Mandatory Envelope Measures Note Block: *On File*

INSTRUCTIONS TO APPLICANT ENVELOPE COMPLIANCE & WORKSHEETS (Check box if worksheet is included)

For detailed instructions on the use of this and all Energy Efficiency Standards compliance forms, please refer to the Nonresidential Compliance Manual.

☒	ENV-1C	Certificate of Compliance and Field Inspections Energy Checklist required on plans for all submittals.
☐	ENV-2C	Use with the Envelope Component Approach. Optional on Plans.
☐	ENV-3C	Use with the Overall Envelope TDV Energy Approach. Optional on plans.
☐	ENV-4C	Use when minimum skylight requirements for large enclosed spaces are required in climate zones 2 through 15. Optional on plans.

2008 Nonresidential Compliance Forms — *August 2009*

THIS DRAWING ACCURATE FOR MECHANICAL WORK ONLY

	BY	CHECKED
DESIGN	Mark Hedglin	Seve Gutierrez
DETAILS	Mark Hedglin	Seve Gutierrez
QUANTITIES	Mark Hedglin	Seve Gutierrez

STATE OF CALIFORNIA DEPARTMENT OF TRANSPORTATION

DIVISION OF ENGINEERING SERVICES
ELECTRICAL-MECHANICAL-WATER AND WASTEWATER DESIGN

BRIDGE NO. 540004R/L
POST MILE R 107.3

C.V. KANE SAFETY ROADSIDE REST AREA REHABILITATION
TITLE 24

SHEET **M0-1**

TAEMWW imperial Rev. 3/12
FILE => m0_1.dgn
DATE PLOTTED => 18-SEP-2013 TIME PLOTTED => 14:01

ORIGINAL SCALE IN INCHES FOR REDUCED PLANS 0 1 2 3

UNIT 3615
PROJECT NUMBER & PHASE 08000002291
EA 000000

DISREGARD PRINTS BEARING EARLIER REVISION DATES
REVISION DATES (PRELIMINARY STAGE ONLY) 10-15-09 12-17-09 02-19-10 04-15-10 10-28-10 11-18-10 02-11-11 07-11-11 01-05-12 08-16-13
SHEET OF

USERNAME => s109858 DATE PLOTTED => 18-SEP-2013 TIME PLOTTED => 14:01

V|=|

Dist	COUNTY	ROUTE	POST MILES TOTAL PROJECT	SHEET No.	TOTAL SHEETS
03, 08	Sac, SBd	5, 15	23.3, R107.3	205	330

REGISTERED ELECTRICAL MECHANICAL DATE 08-16-13

9-16-13
PLANS APPROVAL DATE

REGISTERED PROFESSIONAL ENGINEER MARK HEDGLIN No. M32912 Exp. 09-30-14 MECH STATE OF CALIFORNIA

The State of California or its officers or agents shall not be responsible for the accuracy or completeness of scanned copies of this plan sheet.

ACCESSIBILITY DESIGN APPROVAL STAMP DOT / DES / OTA
PROJECT ID **0800000229**
Reviewed by:
Date: 10-25-11

CALIFORNIA STATE FIRE MARSHAL APPROVED
Approval of this plan does not authorize or approve any omission or deviation from applicable regulations. Final approval is subject to field inspection. One set of approved plans shall be available on the project site at all times.
Reviewed by: FRANCIS SOLICH
Approval date: 09-11-13

NOTES:

1. FOR PIPING DIRECTION, SEE (- / SS-2)
2. FOR PIPING SCHEMATIC , SEE (- / M1-3) (- / M1-4)

EQUIPMENT SCHEDULE

EQUIPMENT	VOLT	PHASE	POWER	DESCRIPTION
ELECTRIC WATER CHILLER	120	1	1/4 HP	10 GPH 50° F OUTLET AT 80° F INLET
WATER HEATER	208	1	2500 W	10 GAL. RECOVERY; 10 GPH AT 100°F RISE
THRU WALL HEAT PUMP 1	208	1	4 AMP	8,000 BTU, 2 SPEED 9.5 EER
THRU WALL HEAT PUMP 2	208	1	4 AMP	6,000 BTU, 2 SPEED 9.5 EER
EXHAUST FAN EF-1	120	1	2.1 AMP	250 CFM 2. 3 SONES Max.

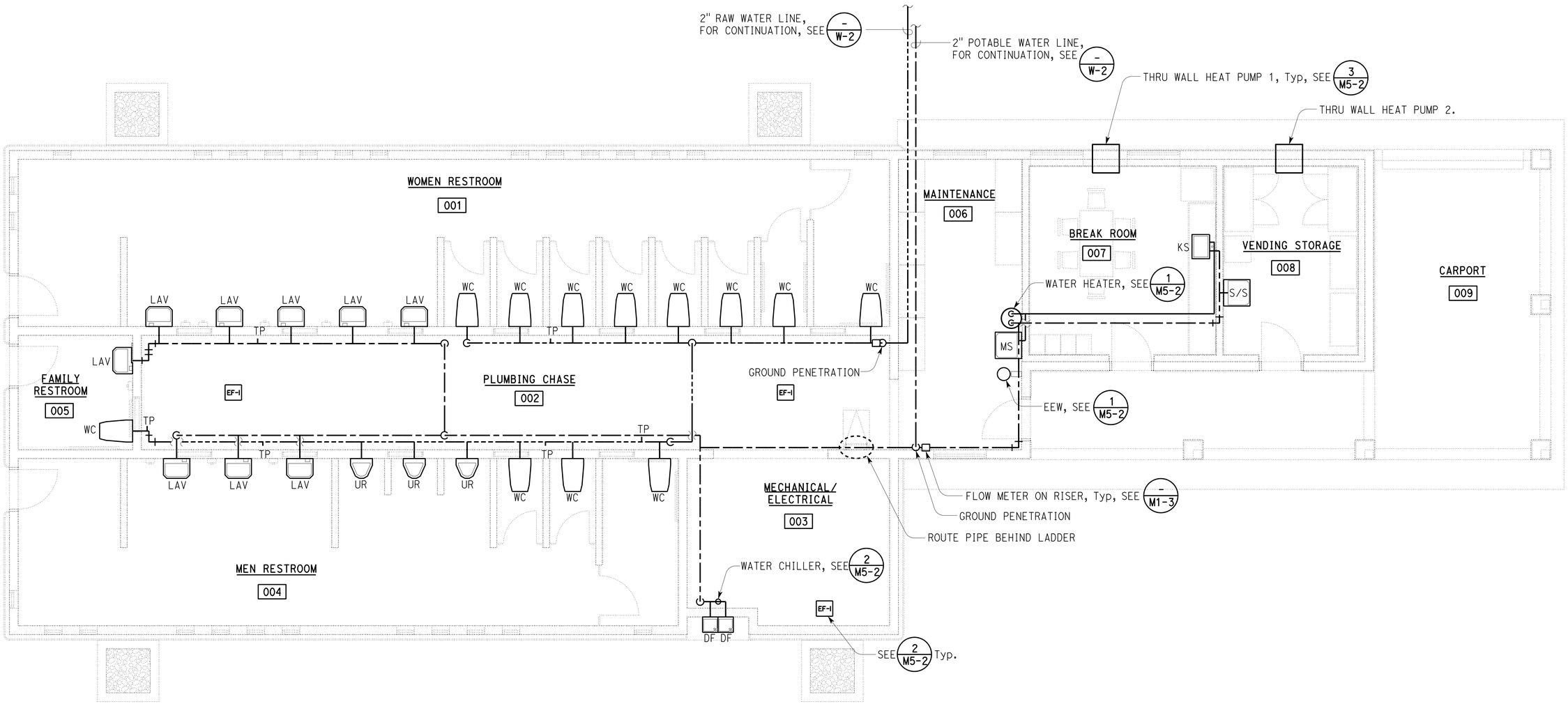

PLAN

SCALE: 1/4" = 1'-0"

THIS DRAWING ACCURATE FOR MECHANICAL WORK ONLY

DESIGN SUPERVISOR	DESIGN	BY Mark Hedglin	CHECKED Seve Gutierrez
DESIGN ENGINEER	DETAILS	BY Mark Hedglin	CHECKED Seve Gutierrez
	QUANTITIES	BY Mark Hedglin	CHECKED Seve Gutierrez

STATE OF CALIFORNIA
DEPARTMENT OF TRANSPORTATION

DIVISION OF ENGINEERING SERVICES
ELECTRICAL-MECHANICAL-WATER AND WASTEWATER DESIGN

BRIDGE NO. 540004R/L
POST MILE R 107.3

C.V. KANE
SAFETY ROADSIDE REST AREA REHABILITATION
STRUCTURE 1 STATION A
DOMESTIC WATER PLAN

SHEET M1-1

TAEMWW imperial Rev. 3/12
FILE => m1_1.dgn
DATE PLOTTED => 18-SEP-2013
TIME PLOTTED => 14:01

ORIGINAL SCALE IN INCHES FOR REDUCED PLANS 0 1 2 3

UNIT 3615
PROJECT NUMBER & PHASE 08000002291
EA 000000

DISREGARD PRINTS BEARING EARLIER REVISION DATES

REVISION DATES (PRELIMINARY STAGE ONLY) 10-15-09 12-17-09 02-19-10 04-15-10 10-28-10 11-18-10 02-11-11 07-11-11 01-05-12 08-16-13

SHEET OF

USERNAME => s109858 DATE PLOTTED => 18-SEP-2013 TIME PLOTTED => 14:01

V|=|

NOTE:

1. FOR PIPING SCHEMATIC, SEE M1-3 M1-4

ACCESSIBILITY DESIGN APPROVAL STAMP
DOT / DES / OTA
PROJECT ID 08000000229
Reviewed by: [signature]
Date: 10-25-11

CALIFORNIA STATE FIRE MARSHAL APPROVED
Approval of this plan does not authorize or approve any omission or deviation from applicable regulations. Final approval is subject to field inspection. One set of approved plans shall be available on the project site at all times.
Reviewed by: [signature] FRANCIS SOLICH
Approval date: 09-11-13

Dist	COUNTY	ROUTE	POST MILES TOTAL PROJECT	SHEET No.	TOTAL SHEETS
03, 08	Sac, SBd	5, 15	23.3, R107.3	206	330

[signature] 08-16-13
REGISTERED ELECTRICAL MECHANICAL DATE

9-16-13
PLANS APPROVAL DATE

REGISTERED PROFESSIONAL ENGINEER MARK HEDGLIN No. M32912 Exp. 09-30-14 MECH STATE OF CALIFORNIA

The State of California or its officers or agents shall not be responsible for the accuracy or completeness of scanned copies of this plan sheet.

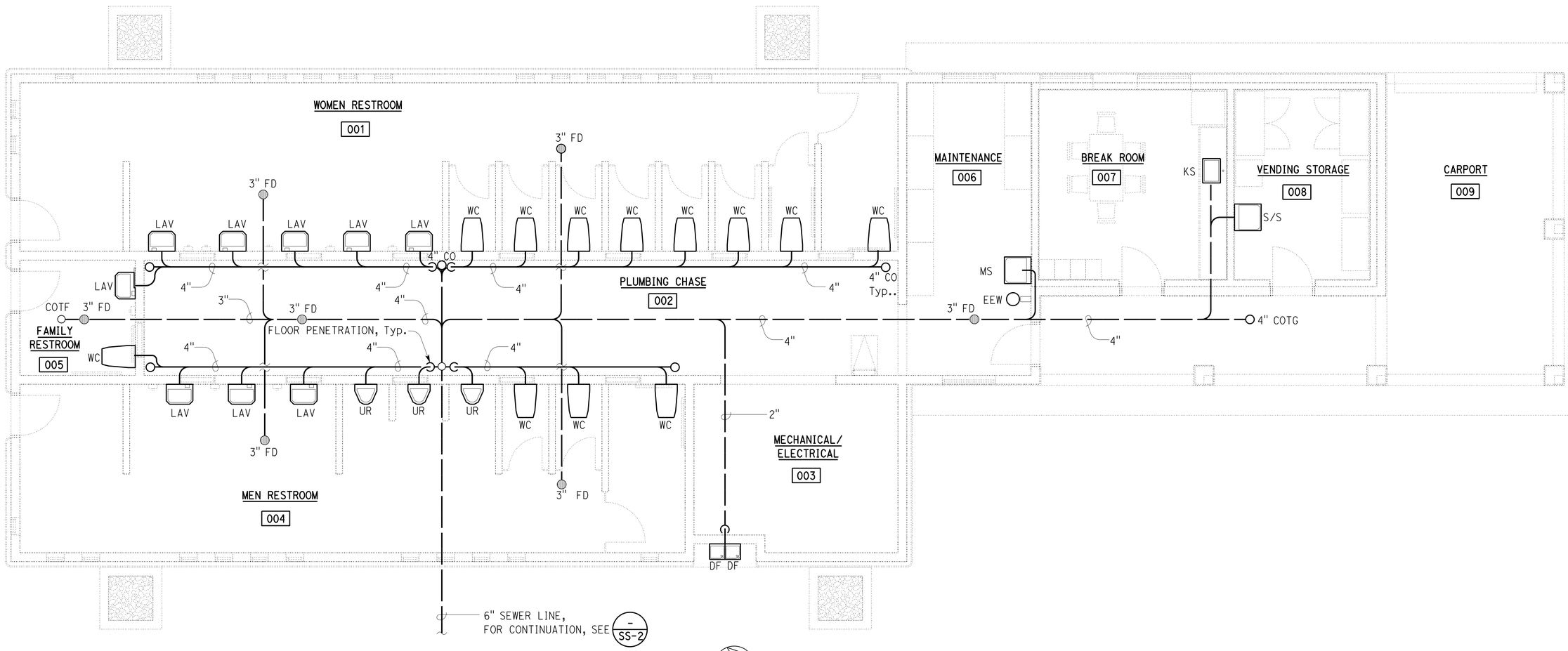

PLAN

SCALE: 1/4" = 1'-0"

THIS DRAWING ACCURATE FOR MECHANICAL WORK ONLY

	BY	CHECKED
DESIGN	Mark Hedglin	Seve Gutierrez
DETAILS	Mark Hedglin	Seve Gutierrez
QUANTITIES	Mark Hedglin	Seve Gutierrez

STATE OF CALIFORNIA
DEPARTMENT OF TRANSPORTATION

DIVISION OF ENGINEERING SERVICES
ELECTRICAL-MECHANICAL-WATER AND WASTEWATER DESIGN

BRIDGE NO. 540004R/L
POST MILE R 107.3

C.V. KANE
SAFETY ROADSIDE REST AREA REHABILITATION
STRUCTURE 1 STATION A
SANITARY SEWER

SHEET M1-2

TAEMWW imperial Rev. 3/12
FILE => m1_2.dgn
DATE PLOTTED => 18-SEP-2013 TIME PLOTTED => 14:01
ORIGINAL SCALE IN INCHES FOR REDUCED PLANS 0 1 2 3

UNIT 3615
PROJECT NUMBER & PHASE 08000002291
EA 000000

DISREGARD PRINTS BEARING EARLIER REVISION DATES
REVISION DATES (PRELIMINARY STAGE ONLY) 10-15-09 12-17-09 02-19-10 04-15-10 10-28-10 11-18-10 02-11-11 07-11-11 01-05-12 08-16-13
SHEET OF

USERNAME => s109858 DATE PLOTTED => 18-SEP-2013 TIME PLOTTED => 14:01

Dist	COUNTY	ROUTE	POST MILES TOTAL PROJECT	SHEET No.	TOTAL SHEETS
03, 08	Sac, SBd	5, 15	23.3, R107.3	207	330

REGISTERED ELECTRICAL MECHANICAL — 08-16-13 DATE

PLANS APPROVAL DATE — 9-16-13

REGISTERED PROFESSIONAL ENGINEER MARK HEDGLIN No. M32912 Exp. 09-30-14 MECH STATE OF CALIFORNIA

The State of California or its officers or agents shall not be responsible for the accuracy or completeness of scanned copies of this plan sheet.

ACCESSIBILITY DESIGN APPROVAL STAMP DOT / DES / OTA

PROJECT ID **08000000229**

Reviewed by: Date: 10-25-11

CALIFORNIA STATE FIRE MARSHAL APPROVED

Approval of this plan does not authorize or approve any omission or deviation from applicable regulations. Final approval is subject to field inspection. One set of approved plans shall be available on the project site at all times.

Reviewed by: FRANCIS SOLICH

Approval date: 09-11-13

PLUMBING SCHEDULE

FIXTURE	DRAINAGE ROUGH-IN	TRAP SIZE	VENT SIZE	MINIMUM CONNECTIONS	
				COLD WATER	HOT WATER
LAVATORY	2"	1½"	1¼"	½"	-
WATER CLOSET	3"	-	2"	1½"	-
URINAL	2"	-	1½"	1¼"	-
KITCHEN SINK	2"	1½"	1½"	½"	½"
SERVICE & MOP SINK	3"	3"	1½"	½"	½"
HOSE FAUCET	-	-	-	¾"	-
DRINKING FOUNTAIN	1½"	1¼"	1¼"	½"	-
TRAP PRIMER	-	-	-	½"	-
FLOOR DRAIN	3"	3"	1½"	-	-
EMERGENCY EYE WASH	-	-	-	½"	-

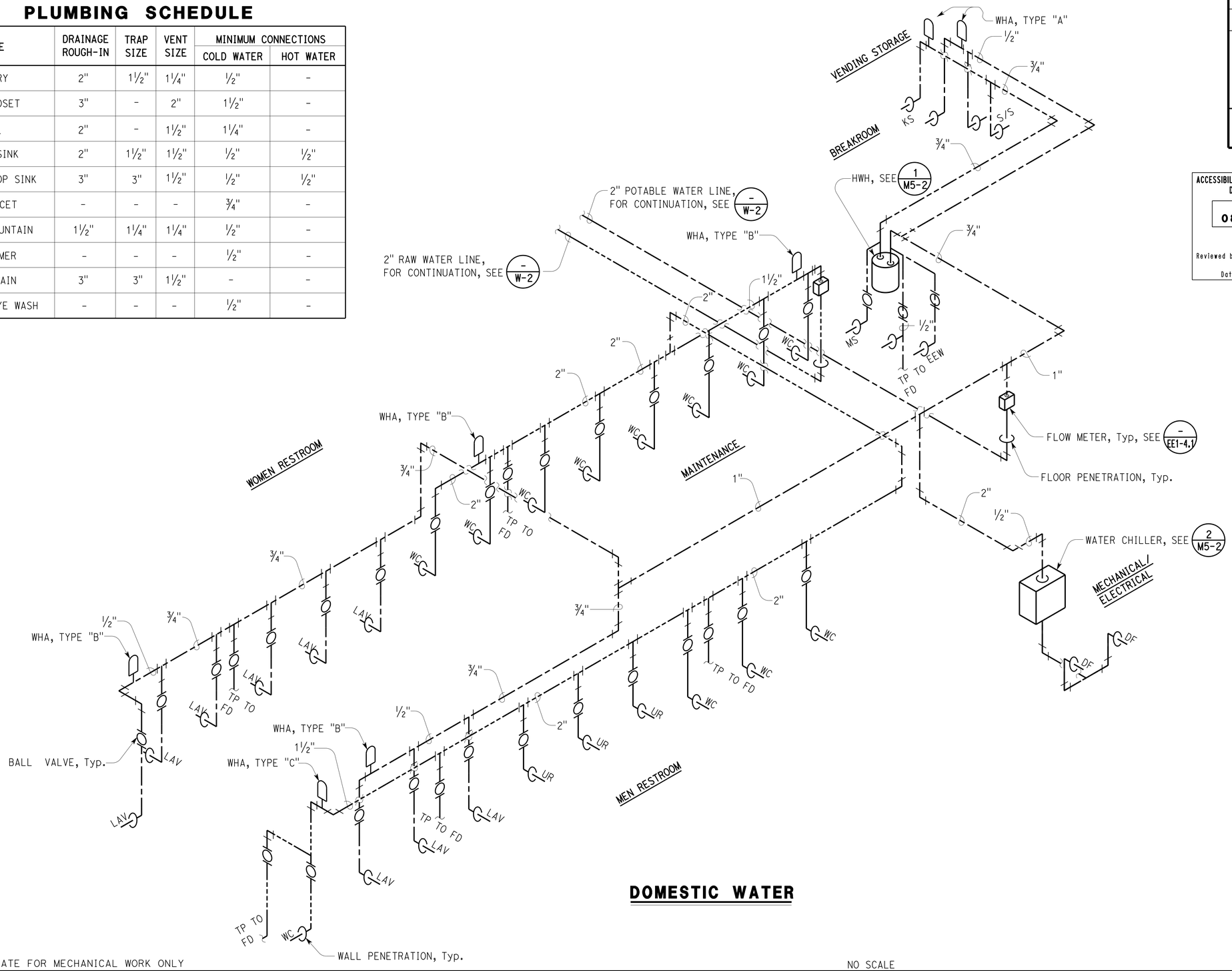

DOMESTIC WATER

THIS DRAWING ACCURATE FOR MECHANICAL WORK ONLY

NO SCALE

	BY	CHECKED
DESIGN	Mark Hedglin	Seve Gutierrez
DETAILS	Mark Hedglin	Seve Gutierrez
QUANTITIES	Mark Hedglin	Seve Gutierrez

STATE OF CALIFORNIA DEPARTMENT OF TRANSPORTATION

DIVISION OF ENGINEERING SERVICES ELECTRICAL-MECHANICAL-WATER AND WASTEWATER DESIGN

BRIDGE NO. 540004R/L

POST MILE R 107.3

C.V. KANE SAFETY ROADSIDE REST AREA REHABILITATION

STRUCTURE 1 STATION A

DOMESTIC WATER-SCHEMATIC

SHEET M1-3

TAEMWW imperial Rev. 3/12

FILE => m1_3.dgn

DATE PLOTTED => 18-SEP-2013 TIME PLOTTED => 14:01

ORIGINAL SCALE IN INCHES FOR REDUCED PLANS 0 1 2 3

UNIT 3615

PROJECT NUMBER & PHASE 08000002291

EA 000000

DISREGARD PRINTS BEARING EARLIER REVISION DATES

REVISION DATES (PRELIMINARY STAGE ONLY) 10-15-09 12-17-09 02-19-10 04-15-10 10-28-10 11-18-10 02-11-11 07-11-11 01-05-12 08-16-13

SHEET OF

USERNAME => s109858 DATE PLOTTED => 18-SEP-2013 TIME PLOTTED => 14:01

V|=|

Dist	COUNTY	ROUTE	POST MILES TOTAL PROJECT	SHEET No.	TOTAL SHEETS
03, 08	Sac, SBd	5, 15	23.3, R107.3	208	330

REGISTERED ELECTRICAL MECHANICAL DATE 08-16-13

PLANS APPROVAL DATE 9-16-13

REGISTERED PROFESSIONAL ENGINEER MARK HEDGLIN No. M32912 Exp. 09-30-14 MECH STATE OF CALIFORNIA

The State of California or its officers or agents shall not be responsible for the accuracy or completeness of scanned copies of this plan sheet.

ACCESSIBILITY DESIGN APPROVAL STAMP DOT / DES / OTA

PROJECT ID **0800000229**

Reviewed by:

Date: 10-25-11

CALIFORNIA STATE FIRE MARSHAL APPROVED

Approval of this plan does not authorize or approve any omission or deviation from applicable regulations. Final approval is subject to field inspection. One set of approved plans shall be available on the project site at all times.

Reviewed by: FRANCIS SOLICH

Approval date: 09-11-13

NOTES:

1. FOR PLUMBING SCHEDULE, SEE M1-3
2. ALL FLOOR DRAINS TO HAVE TRAP PRIMERS.

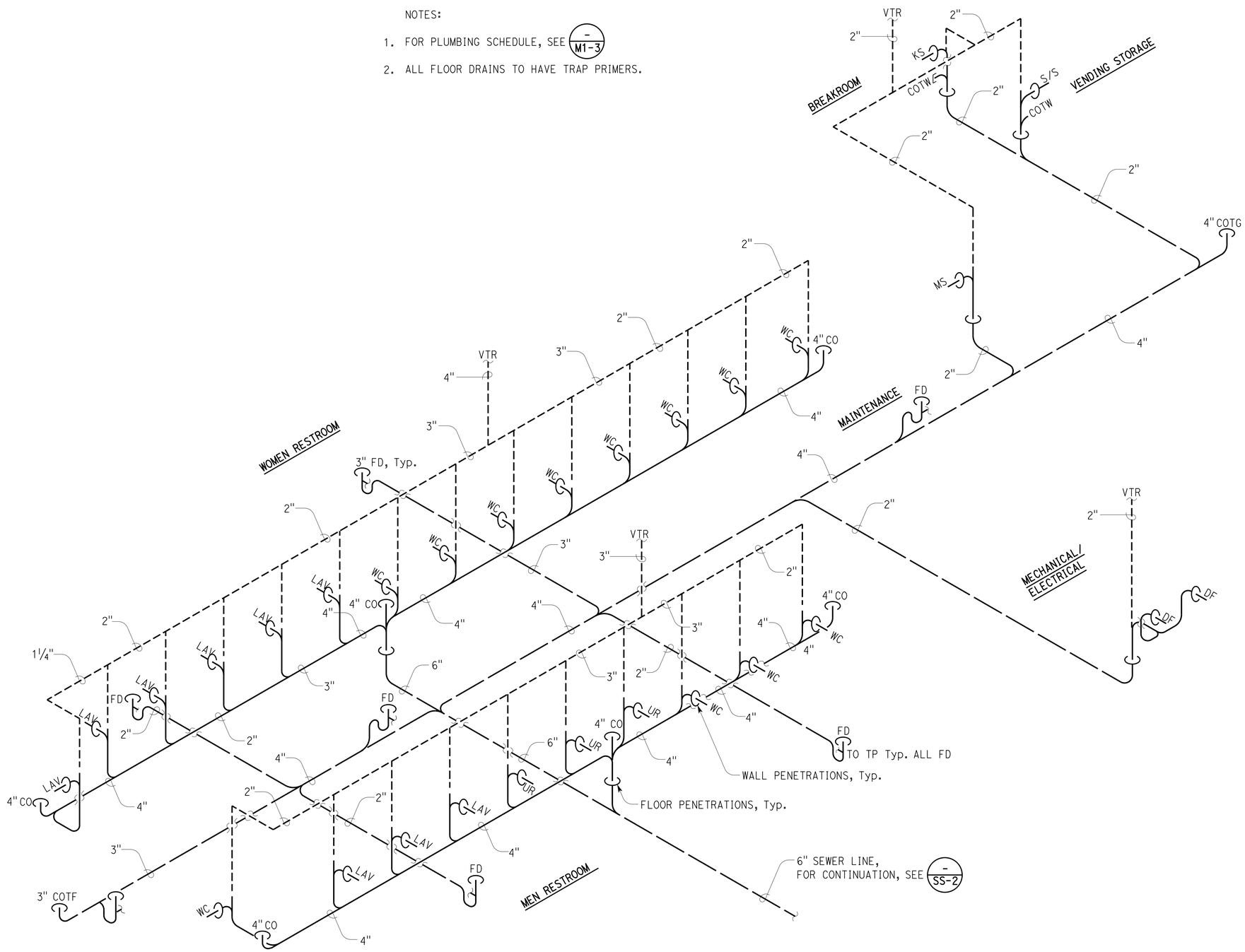

SANITARY SEWER

THIS DRAWING ACCURATE FOR MECHANICAL WORK ONLY

NO SCALE

	BY	CHECKED
DESIGN	Mark Hedglin	Seve Gutierrez
DETAILS	Mark Hedglin	Seve Gutierrez
QUANTITIES	Mark Hedglin	Seve Gutierrez

STATE OF CALIFORNIA DEPARTMENT OF TRANSPORTATION

DIVISION OF ENGINEERING SERVICES ELECTRICAL-MECHANICAL-WATER AND WASTEWATER DESIGN

BRIDGE NO. 540004R/L

POST MILE R 107.3

C.V. KANE SAFETY ROADSIDE REST AREA REHABILITATION

STRUCTURE 1 STATION A

SANITARY SEWER-SCHEMATIC

SHEET M1-4

TAEMWW imperial Rev. 3/12

FILE => m1_4.dgn

DATE PLOTTED => 18-SEP-2013 TIME PLOTTED => 14:01

ORIGINAL SCALE IN INCHES FOR REDUCED PLANS 0 1 2 3

UNIT 3615

PROJECT NUMBER & PHASE 08000002291

EA 000000

DISREGARD PRINTS BEARING EARLIER REVISION DATES

REVISION DATES (PRELIMINARY STAGE ONLY) 10-15-09 12-17-09 02-19-10 04-15-10 10-28-10 11-18-10 02-11-11 07-11-11 01-05-12 08-16-13

SHEET OF

USERNAME => s103858 DATE PLOTTED => 18-SEP-2013 TIME PLOTTED => 14:01

V|=|

Dist	COUNTY	ROUTE	POST MILES TOTAL PROJECT	SHEET No.	TOTAL SHEETS
03, 08	Sac, SBd	5, 15	23.3, R107.3	209	330

REGISTERED ELECTRICAL MECHANICAL DATE 08-16-13

PLANS APPROVAL DATE 9-16-13

REGISTERED PROFESSIONAL ENGINEER MARK HEDGLIN No. M32912 Exp. 09-30-14 MECH STATE OF CALIFORNIA

The State of California or its officers or agents shall not be responsible for the accuracy or completeness of scanned copies of this plan sheet.

ACCESSIBILITY DESIGN APPROVAL STAMP DOT / DES / OTA

PROJECT ID **08000000229**

Reviewed by:

Date: 10-25-11

CALIFORNIA STATE FIRE MARSHAL APPROVED

Approval of this plan does not authorize or approve any omission or deviation from applicable regulations. Final approval is subject to field inspection. One set of approved plans shall be available on the project site at all times.

Reviewed by: FRANCIS SOLICH

Approval date: 09-11-13

EQUIPMENT SCHEDULE

EQUIPMENT	VOLT	PHASE	POWER	DESCRIPTION
ELECTRIC WATER CHILLER	120	1	1/4 Hp	10 GPH 50Ø F OUTLET AT 80Ø F INLET
EXHAUST FAN EF-1	120	1	2.1 AMP	250 CFM 830 RPM 2.3 SONES, Max

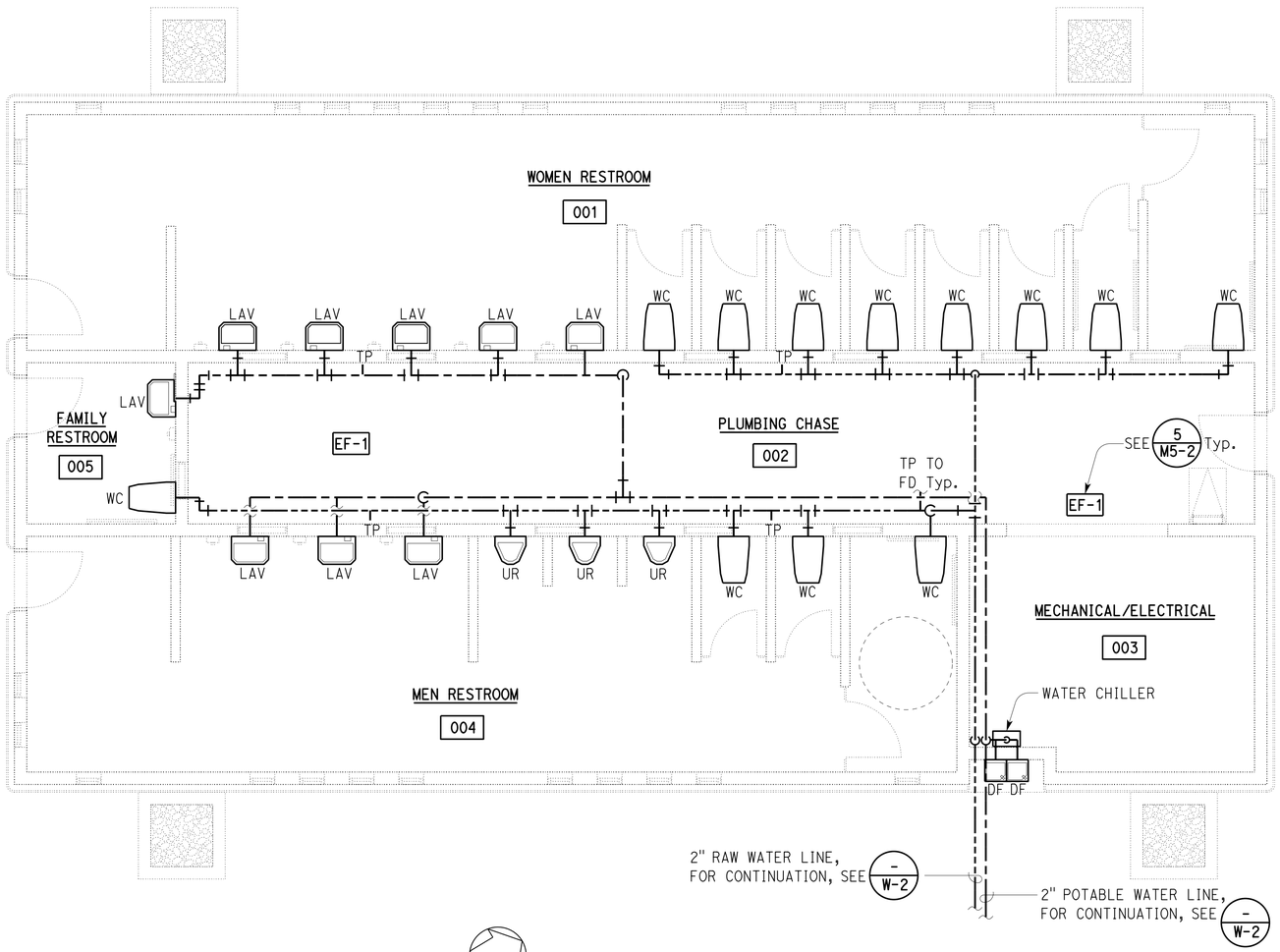

PLAN

SCALE: 1/4" = 1'-0"

NOTE:

1. FOR PIPING SCHEMATIC, SEE - M2-3 - M2-4

THIS DRAWING ACCURATE FOR MECHANICAL WORK ONLY

	BY	CHECKED
DESIGN	Mark Hedglin	Seve Gutierrez
DETAILS	Mark Hedglin	Seve Gutierrez
QUANTITIES	Mark Hedglin	Seve Gutierrez

STATE OF CALIFORNIA DEPARTMENT OF TRANSPORTATION

DIVISION OF ENGINEERING SERVICES ELECTRICAL-MECHANICAL-WATER AND WASTEWATER DESIGN

BRIDGE NO. 540004R/L POST MILE R 107.3

C.V. KANE SAFETY ROADSIDE REST AREA REHABILITATION

STRUCTURE 2 STATION B

DOMESTIC WATER PLAN

SHEET M2-1

UNIT 3615 PROJECT NUMBER & PHASE 08000002291

DISREGARD PRINTS BEARING EARLIER REVISION DATES

REVISION DATES (PRELIMINARY STAGE ONLY) 10-15-09 12-17-09 02-19-10 04-15-10 10-28-10 11-18-10 02-11-11 07-11-11 01-05-12 08-16-13

SHEET OF

ORIGINAL SCALE IN INCHES FOR REDUCED PLANS 0 1 2 3

EA 000000

TAEMWW imperial Rev. 3/12

FILE => m2_1.dgn DATE PLOTTED => 18-SEP-2013 TIME PLOTTED => 14:01

USERNAME => s109858 DATE PLOTTED => 18-SEP-2013 TIME PLOTTED => 14:01

V|=|

Dist	COUNTY	ROUTE	POST MILES TOTAL PROJECT	SHEET No.	TOTAL SHEETS
03, 08	Sac, SBd	5, 15	23.3, R107.3	210	330

ACCESSIBILITY DESIGN APPROVAL STAMP
DOT / DES / OTA
PROJECT ID
0800000229
Reviewed by:
Date: 10-25-11

CALIFORNIA STATE FIRE MARSHAL APPROVED
Approval of this plan does not authorize or approve any omission or deviation from applicable regulations. Final approval is subject to field inspection. One set of approved plans shall be available on the project site at all times.
Reviewed by: FRANCIS SOLICH
Approval date: 09-11-13

08-16-13
REGISTERED ELECTRICAL MECHANICAL DATE

9-16-13
PLANS APPROVAL DATE

REGISTERED PROFESSIONAL ENGINEER
MARK HEDGLIN
No. M32912
Exp. 09-30-14
MECH
STATE OF CALIFORNIA

The State of California or its officers or agents shall not be responsible for the accuracy or completeness of scanned copies of this plan sheet.

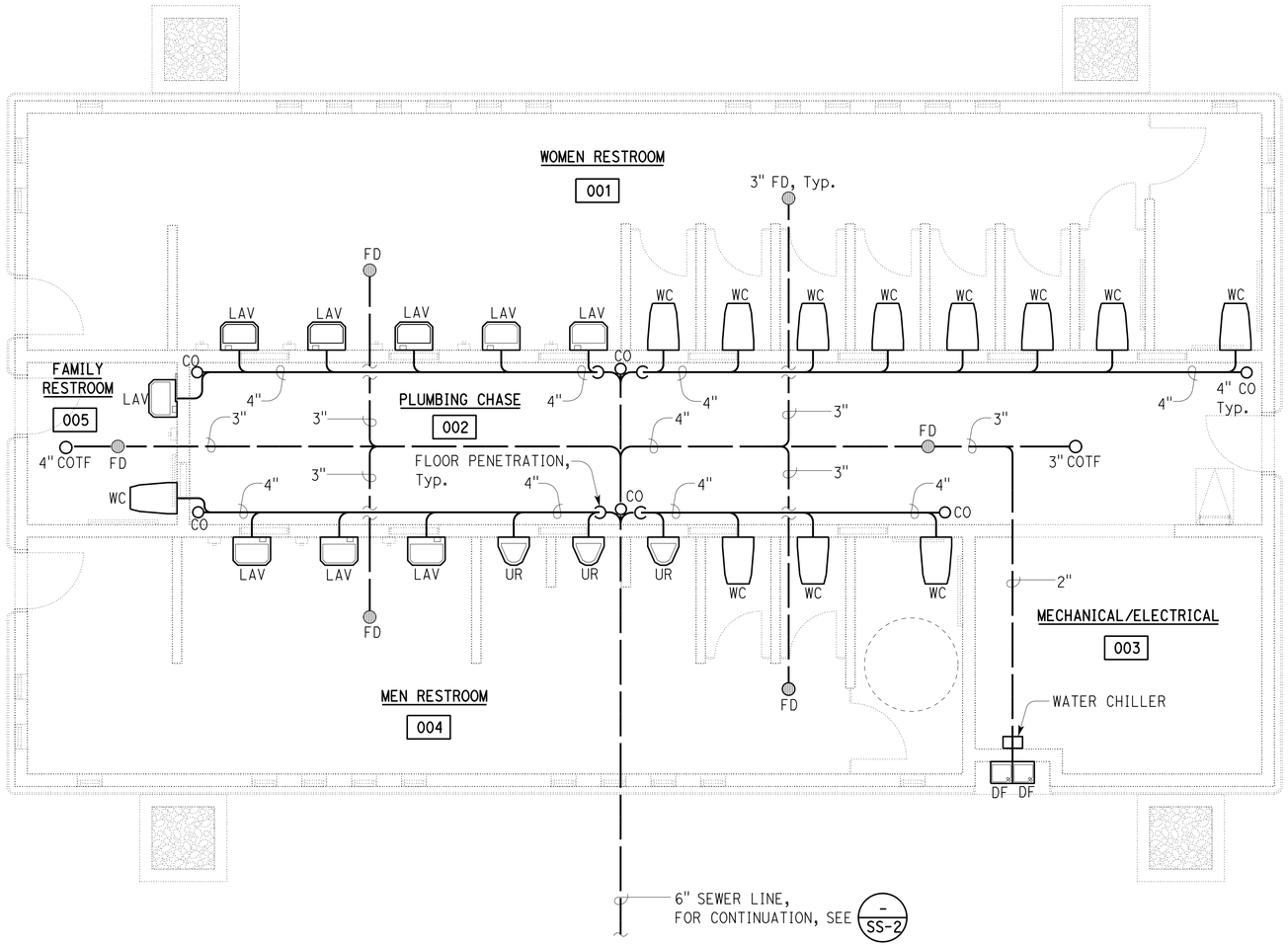

NOTE:

1. FOR PIPING SCHEMATIC, SEE M2-3 M2-4

PLAN

SCALE: 1/4" = 1'-0"

THIS DRAWING ACCURATE FOR MECHANICAL WORK ONLY

DESIGN	BY Mark Hedglin	CHECKED Seve Gutierrez	
DETAILS	BY Mark Hedglin	CHECKED Seve Gutierrez	
QUANTITIES	BY Mark Hedglin	CHECKED Seve Gutierrez	

STATE OF CALIFORNIA
DEPARTMENT OF TRANSPORTATION

DIVISION OF ENGINEERING SERVICES
ELECTRICAL-MECHANICAL-WATER AND WASTEWATER DESIGN

BRIDGE NO. 540004R/L
POST MILE R 107.3

C.V. KANE
SAFETY ROADSIDE REST AREA REHABILITATION
STRUCTURE 2 STATION B
SANITARY SEWER PLAN

SHEET M2-2

TAEMWW imperial Rev. 3/12
FILE => m2_2.dgn
DATE PLOTTED => 18-SEP-2013 TIME PLOTTED => 14:02

ORIGINAL SCALE IN INCHES FOR REDUCED PLANS 0 1 2 3

UNIT 3615
PROJECT NUMBER & PHASE 08000002291
EA 000000

DISREGARD PRINTS BEARING EARLIER REVISION DATES
REVISION DATES (PRELIMINARY STAGE ONLY) 10-15-09 12-17-09 02-19-10 04-15-10 10-28-10 11-18-10 02-11-11 07-11-11 01-05-12 08-16-13
SHEET OF

USERNAME => s109858 DATE PLOTTED => 18-SEP-2013 TIME PLOTTED => 14:02

V|=|

PLUMBING SCHEDULE

FIXTURE	DRAINAGE ROUGH-IN	TRAP SIZE	VENT SIZE	MINIMUM CONNECTIONS	
				COLD WATER	HOT WATER
LAVATORY	2"	1½"	1¼"	½"	-
WATER CLOSET	3"	-	2"	1½"	-
URINAL	2"	-	1½"	1¼"	-
KITCHEN SINK	2"	1½"	1½"	½"	½"
SERVICE & MOP SINK	3"	3"	1½"	½"	½"
HOSE FAUCET	-	-	-	¾"	-
DRINKING FOUNTAIN	1½"	1¼"	1¼"	½"	-
TRAP PRIMER	-	-	-	½"	-
FLOOR DRAIN	3"	3"	1½"	-	-
EMERGENCY EYE WASH	-	-	-	½"	-

ACCESSIBILITY DESIGN APPROVAL STAMP
DOT / DES / OTA
PROJECT ID
0800000229
Reviewed by:
Date: 10-25-11

CALIFORNIA STATE FIRE MARSHAL
APPROVED
Approval of this plan does not authorize or approve any omission or deviation from applicable regulations. Final approval is subject to field inspection. One set of approved plans shall be available on the project site at all times.
Reviewed by: FRANCIS SOLICH
Approval date: 09-11-13

Dist	COUNTY	ROUTE	POST MILES TOTAL PROJECT	SHEET No.	TOTAL SHEETS
03, 08	Sac, SBd	5, 15	23.3, R107.3	211	330

08-16-13
REGISTERED ELECTRICAL MECHANICAL DATE

9-16-13
PLANS APPROVAL DATE

REGISTERED PROFESSIONAL ENGINEER
MARK HEDGLIN
No. M32912
Exp. 09-30-14
MECH
STATE OF CALIFORNIA

The State of California or its officers or agents shall not be responsible for the accuracy or completeness of scanned copies of this plan sheet.

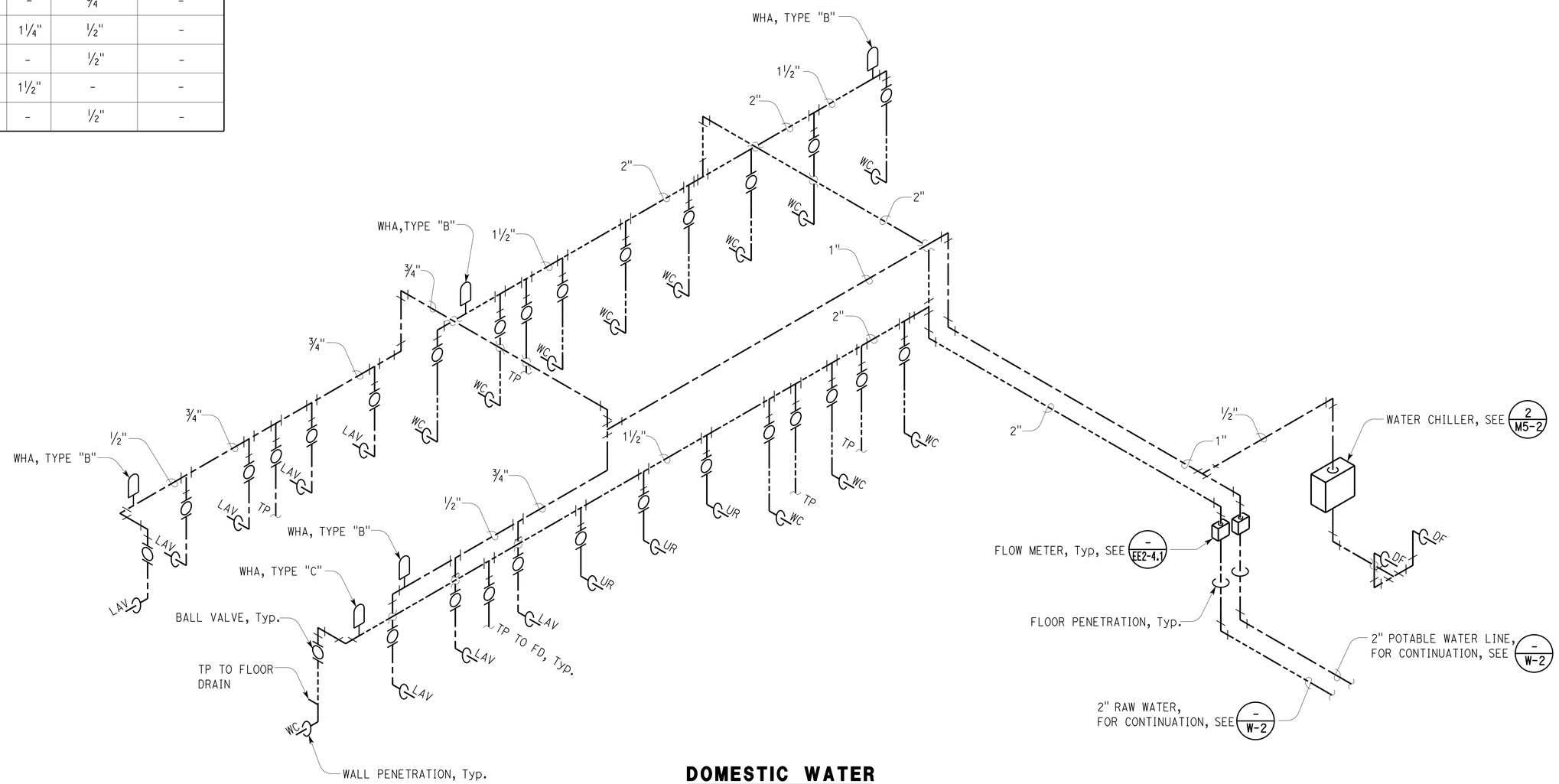

DOMESTIC WATER

THIS DRAWING ACCURATE FOR MECHANICAL WORK ONLY

	BY	CHECKED
DESIGN	Mark Hedglin	Seve Gutierrez
DETAILS	Mark Hedglin	Seve Gutierrez
QUANTITIES	Mark Hedglin	Seve Gutierrez

STATE OF CALIFORNIA
DEPARTMENT OF TRANSPORTATION

DIVISION OF ENGINEERING SERVICES
ELECTRICAL-MECHANICAL-WATER AND WASTEWATER DESIGN

BRIDGE NO. 540004R/L
POST MILE R 107.3

C.V. KANE
SAFETY ROADSIDE REST AREA REHABILITATION
STRUCTURE 2 STATION B
DOMESTIC WATER SCHEMATIC

SHEET M2-3

TAEMWW imperial Rev. 3/12
FILE => m2_3.dgn
DATE PLOTTED => 18-SEP-2013 TIME PLOTTED => 14:02
ORIGINAL SCALE IN INCHES FOR REDUCED PLANS 0 1 2 3
UNIT 3615
PROJECT NUMBER & PHASE 08000002291
EA 000000
DISREGARD PRINTS BEARING EARLIER REVISION DATES
REVISION DATES (PRELIMINARY STAGE ONLY) 10-15-09 12-17-09 02-19-10 04-15-10 10-28-10 11-18-10 02-11-11 01-11-11 01-05-12 08-16-13
SHEET OF

USERNAME => s109858 DATE PLOTTED => 18-SEP-2013 TIME PLOTTED => 14:02

Dist	COUNTY	ROUTE	POST MILES TOTAL PROJECT	SHEET No.	TOTAL SHEETS
03, 08	Sac, SBd	5, 15	23.3, R107.3	212	330

08-16-13
REGISTERED ELECTRICAL MECHANICAL DATE

9-16-13
PLANS APPROVAL DATE

REGISTERED PROFESSIONAL ENGINEER MARK HEDGLIN No. M32912 Exp. 09-30-14 MECH STATE OF CALIFORNIA

The State of California or its officers or agents shall not be responsible for the accuracy or completeness of scanned copies of this plan sheet.

ACCESSIBILITY DESIGN APPROVAL STAMP DOT / DES / OTA
PROJECT ID **0800000229**
Reviewed by:
Date: 10-25-11

CALIFORNIA STATE FIRE MARSHAL APPROVED
Approval of this plan does not authorize or approve any omission or deviation from applicable regulations. Final approval is subject to field inspection. One set of approved plans shall be available on the project site at all times.
Reviewed by: FRANCIS SOLICH
Approval date: 09-11-13

NOTES:

1. FOR PLUMBING SCHEDULE, SEE - / M2-3
2. ALL FLOOR DRAINS TO HAVE TRAP PRIMERS.

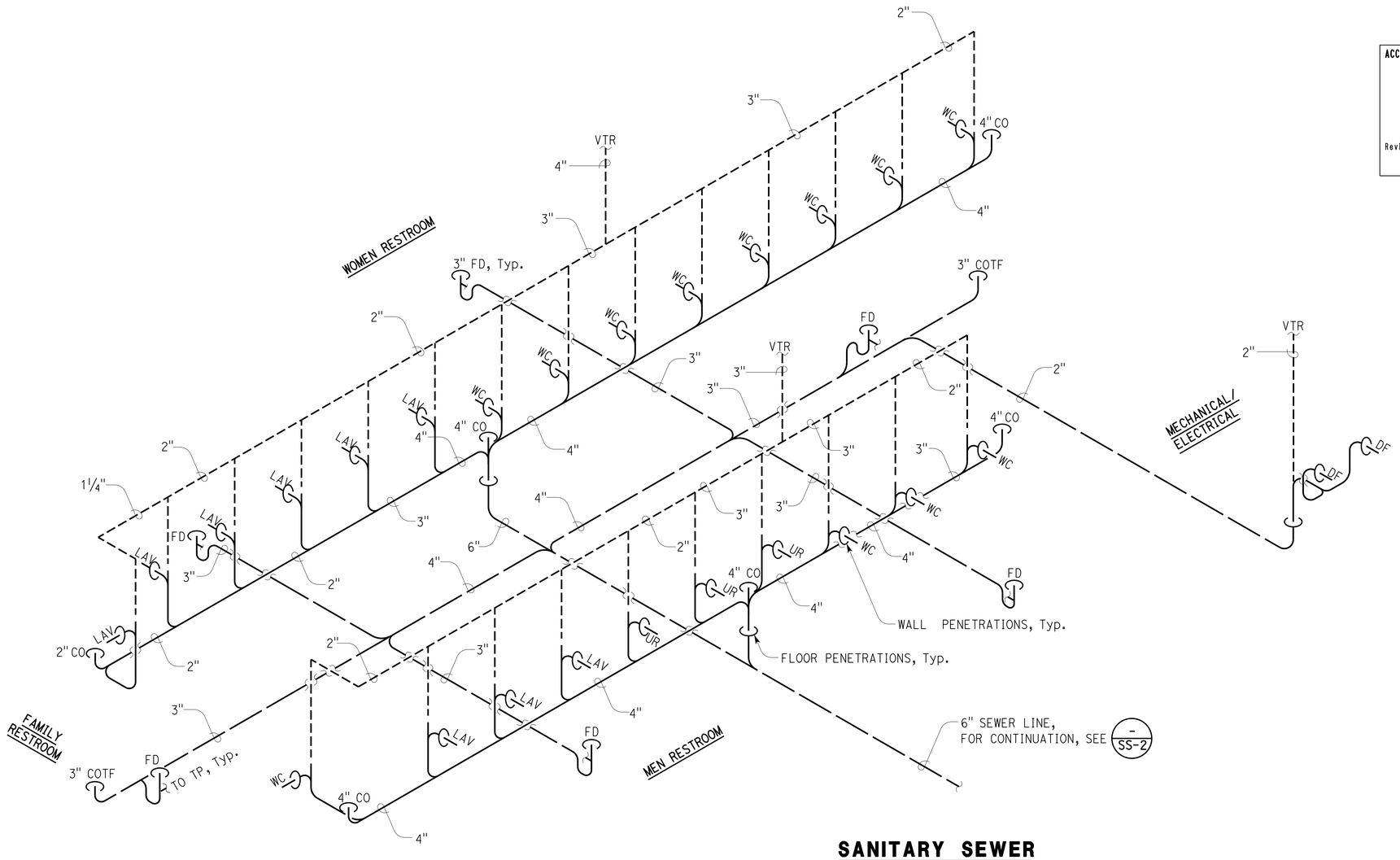

SANITARY SEWER

THIS DRAWING ACCURATE FOR MECHANICAL WORK ONLY

	BY	CHECKED
DESIGN	Mark Hedglin	Seve Gutierrez
DETAILS	Mark Hedglin	Seve Gutierrez
QUANTITIES	Mark Hedglin	Seve Gutierrez

STATE OF CALIFORNIA DEPARTMENT OF TRANSPORTATION

DIVISION OF ENGINEERING SERVICES ELECTRICAL-MECHANICAL-WATER AND WASTEWATER DESIGN

BRIDGE NO. 540004R/L
POST MILE R 107.3

C.V. KANE SAFETY ROADSIDE REST AREA REHABILITATION
STRUCTURE 2 STATION B
SANITARY SEWER-SCHEMATIC

SHEET M2-4

TAEMWW imperial Rev. 3/12
FILE => m2_4.dgn
DATE PLOTTED => 18-SEP-2013 TIME PLOTTED => 14:02
ORIGINAL SCALE IN INCHES FOR REDUCED PLANS 0 1 2 3
UNIT 3615
PROJECT NUMBER & PHASE 08000002291
EA 000000
DISREGARD PRINTS BEARING EARLIER REVISION DATES
REVISION DATES (PRELIMINARY STAGE ONLY) 10-15-09 12-17-09 02-19-10 04-15-10 10-28-10 11-18-10 02-14-11 07-11-11 01-05-12 08-16-13
SHEET OF

USERNAME => s109858 DATE PLOTTED => 18-SEP-2013 TIME PLOTTED => 14:02

Dist	COUNTY	ROUTE	POST MILES TOTAL PROJECT	SHEET No.	TOTAL SHEETS
03, 08	Sac, SBd	5, 15	23.3, R107.3	213	330

REGISTERED ELECTRICAL MECHANICAL DATE 08-16-13

PLANS APPROVAL DATE 9-16-13

REGISTERED PROFESSIONAL ENGINEER MARK HEDGLIN No. M32912 Exp. 09-30-14 MECH STATE OF CALIFORNIA

The State of California or its officers or agents shall not be responsible for the accuracy or completeness of scanned copies of this plan sheet.

ACCESSIBILITY DESIGN APPROVAL STAMP DOT / DES / OTA

PROJECT ID 0800000229

Reviewed by: Date: 10-25-11

CALIFORNIA STATE FIRE MARSHAL APPROVED

Approval of this plan does not authorize or approve any omission or deviation from applicable regulations. Final approval is subject to field inspection. One set of approved plans shall be available on the project site at all times.

Reviewed by: FRANCIS SOLICH

Approval date: 09-11-13

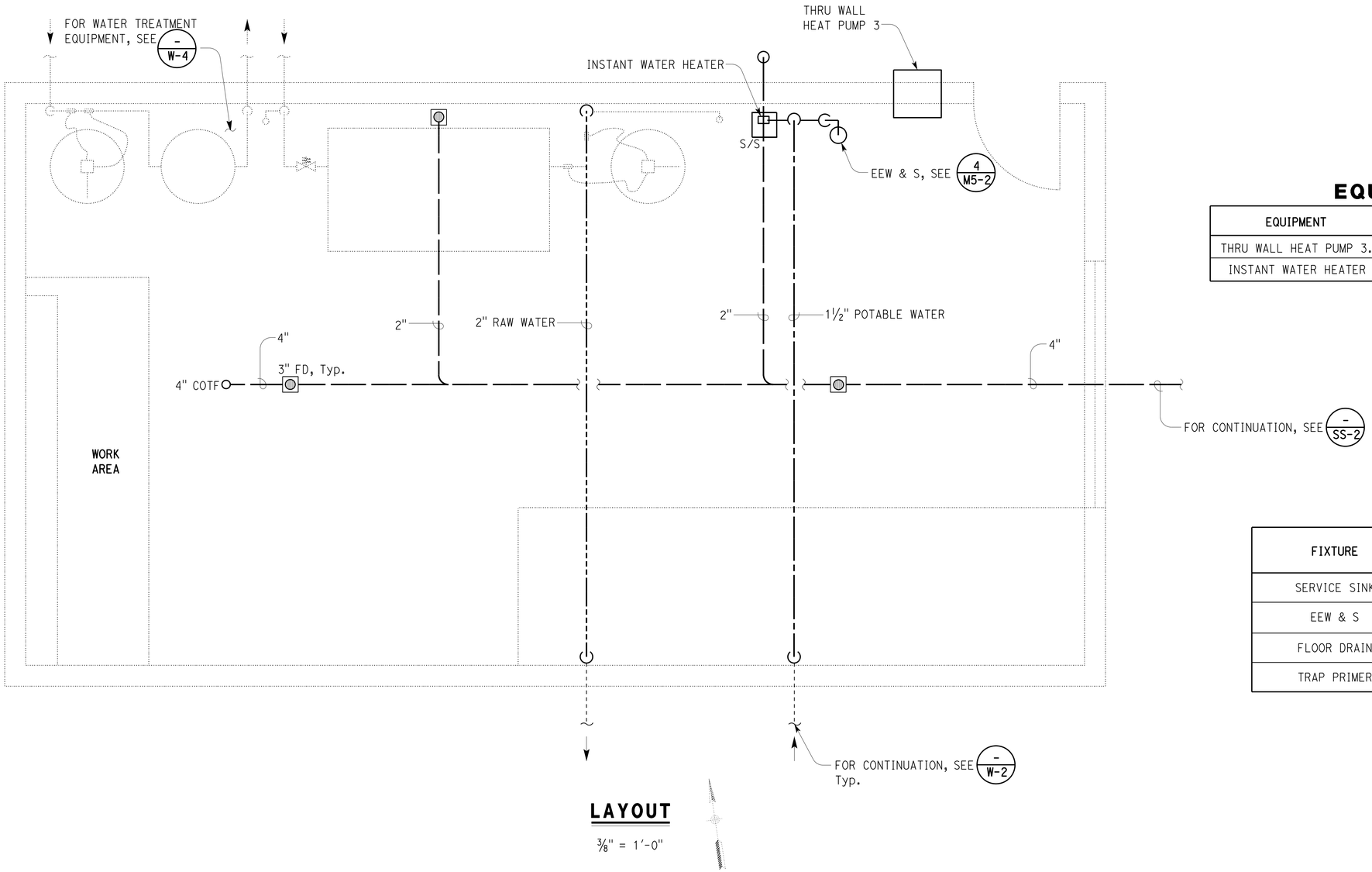

LAYOUT

⅜" = 1'-0"

EQUIPMENT SCHEDULE

EQUIPMENT	VOLT	PHASE	POWER	DESCRIPTION
THRU WALL HEAT PUMP 3.	208	1	12 AMP	25,000 BTU, 3 SPEED 9.5 EER
INSTANT WATER HEATER	208	1	7. 1 KW	1 GPM 24° F TEMPERATURE RISE

PLUMBING SCHEDULE

FIXTURE	DRAINAGE ROUGH-IN	TRAP SIZE	VENT SIZE	MINIMUM CONNECTIONS	
				COLD WATER	HOT WATER
SERVICE SINK	2"	1½"	1¼"	½"	½"
EEW & S	-	-	2"	1¼"	-
FLOOR DRAIN	3"	3"	1½"	-	-
TRAP PRIMER	-	-	-	½"	-

THIS DRAWING ACCURATE FOR MECHANICAL WORK ONLY

	BY	CHECKED
DESIGN	Mark Hedglin	Seve Gutierrez
DETAILS	Mark Hedglin	Seve Gutierrez
QUANTITIES	Mark Hedglin	Seve Gutierrez

STATE OF CALIFORNIA DEPARTMENT OF TRANSPORTATION

DIVISION OF ENGINEERING SERVICES ELECTRICAL-MECHANICAL-WATER AND WASTEWATER DESIGN

BRIDGE NO. 540004R/L

POST MILE R 107.3

C.V. KANE SAFETY ROADSIDE REST AREA REHABILITATION

WATER TREATMENT

DOMESTIC WATER AND SEWER PLAN

SHEET M4-1

TAEMWW imperial Rev. 3/12

FILE => m4_1.dgn

DATE PLOTTED => 18-SEP-2013 TIME PLOTTED => 14:02

ORIGINAL SCALE IN INCHES FOR REDUCED PLANS 0 1 2 3

UNIT 3615

PROJECT NUMBER & PHASE 08000002291

EA 000000

DISREGARD PRINTS BEARING EARLIER REVISION DATES

REVISION DATES (PRELIMINARY STAGE ONLY) 10-15-09 12-17-09 02-19-10 04-15-10 10-28-10 11-18-10 02-11-11 07-11-11 01-05-12 08-16-13

SHEET OF

USERNAME => s109858 DATE PLOTTED => 18-SEP-2013 TIME PLOTTED => 14:02

VI=I

Dist	COUNTY	ROUTE	POST MILES TOTAL PROJECT	SHEET No.	TOTAL SHEETS
03, 08	Sac, SBd	5, 15	23.3, R107.3	214	330

REGISTERED ELECTRICAL MECHANICAL DATE 08-16-13

PLANS APPROVAL DATE 9-16-13

REGISTERED PROFESSIONAL ENGINEER MARK HEDGLIN No. M32912 Exp. 09-30-14 MECH STATE OF CALIFORNIA

The State of California or its officers or agents shall not be responsible for the accuracy or completeness of scanned copies of this plan sheet.

ACCESSIBILITY DESIGN APPROVAL STAMP DOT / DES / OTA

PROJECT ID **0800000229**

Reviewed by: Date: 10-25-11

CALIFORNIA STATE FIRE MARSHAL APPROVED

Approval of this plan does not authorize or approve any omission or deviation from applicable regulations. Final approval is subject to field inspection. One set of approved plans shall be available on the project site at all times.

Reviewed by: FRANCIS SOLICH

Approval date: 09-11-13

PLUMBING SCHEDULE

FIXTURE	DRAINAGE ROUGH-IN	TRAP SIZE	VENT SIZE	MINIMUM CONNECTIONS	
				COLD WATER	HOT WATER
SERVICE SINK	3"	3"	1½"	½"	½"
TRAP PRIMER	-	-	-	½"	-
FLOOR DRAIN	3"	3"	1½"	-	-
EEW & S	-	-	-	1¼"	-

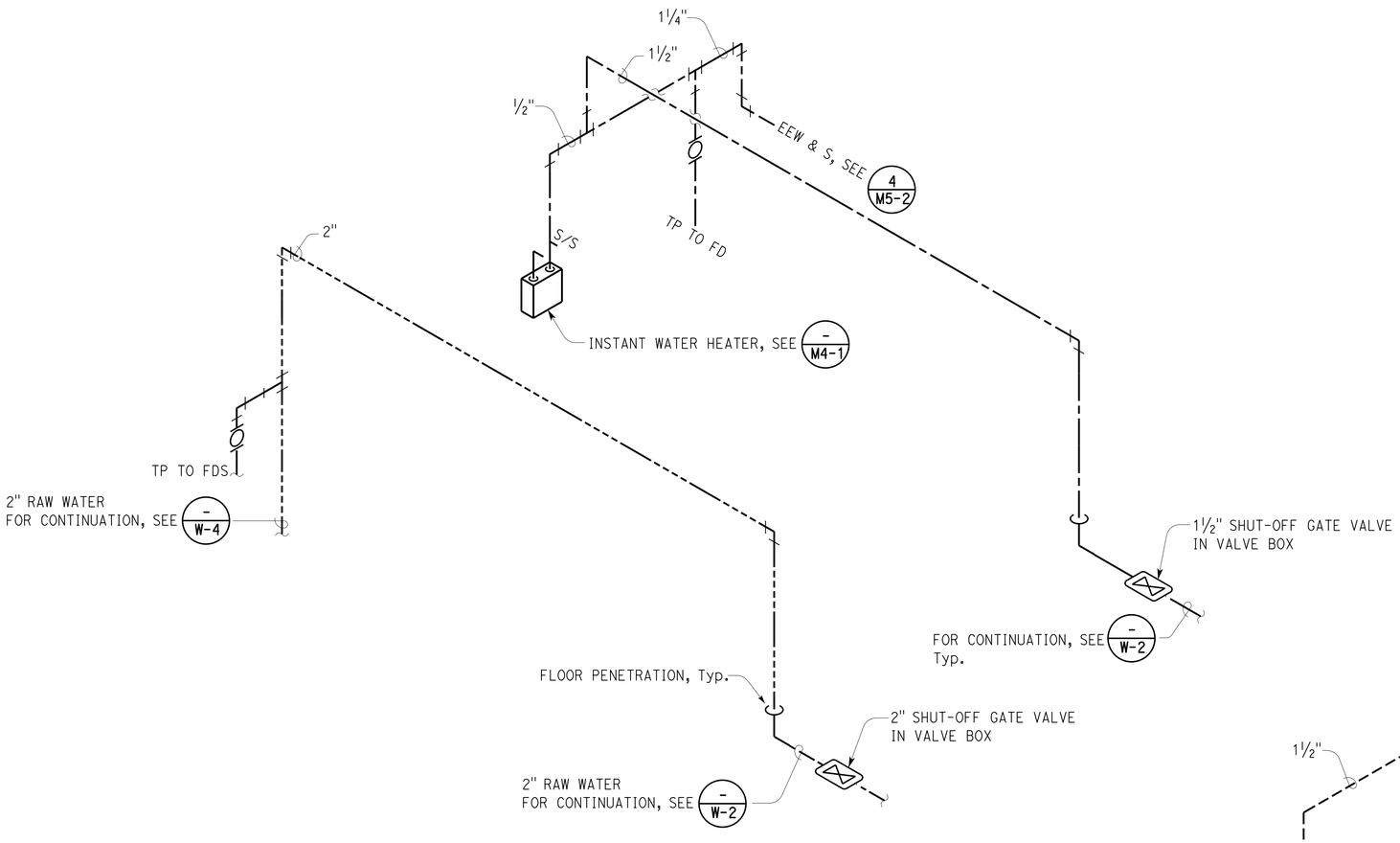

DOMESTIC WATER

NO SCALE

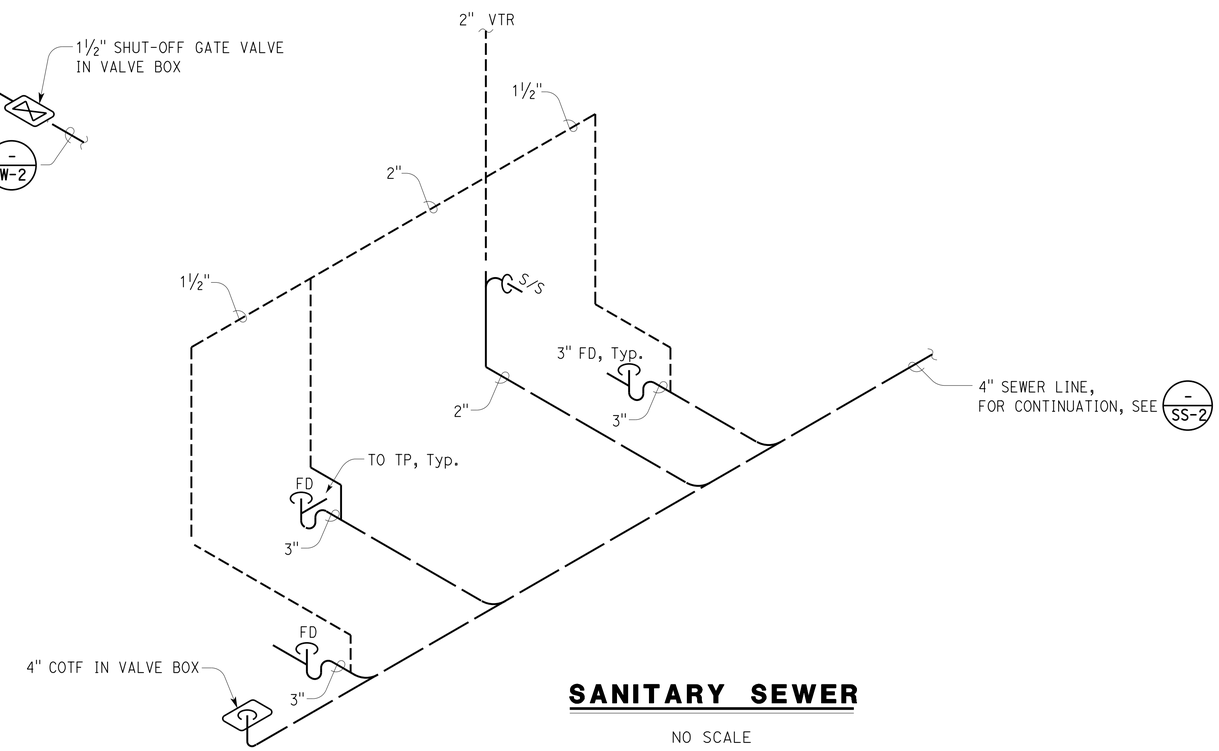

SANITARY SEWER

NO SCALE

THIS DRAWING ACCURATE FOR MECHANICAL WORK ONLY

	BY	CHECKED
DESIGN	Mark Hedglin	Seve Gutierrez
DETAILS	Mark Hedglin	Seve Gutierrez
QUANTITIES	Mark Hedglin	Seve Gutierrez

STATE OF CALIFORNIA DEPARTMENT OF TRANSPORTATION

DIVISION OF ENGINEERING SERVICES ELECTRICAL-MECHANICAL-WATER AND WASTEWATER DESIGN

BRIDGE NO. 540004R/L

POST MILE R 107.3

C.V. KANE SAFETY ROADSIDE REST AREA REHABILITATION

WATER TREATMENT

DOMESTIC WATER AND SEWER PLAN

SHEET M4-2

TAEMWW imperial Rev. 3/12

FILE => m4_2.dgn

DATE PLOTTED => 18-SEP-2013 TIME PLOTTED => 14:02

ORIGINAL SCALE IN INCHES FOR REDUCED PLANS 0 1 2 3

UNIT 3615

PROJECT NUMBER & PHASE 08000002291

EA 000000

DISREGARD PRINTS BEARING EARLIER REVISION DATES

REVISION DATES (PRELIMINARY STAGE ONLY) 10-15-09 12-17-09 02-19-10 04-15-10 10-28-10 11-18-10 02-11-11 07-11-11 01-05-12 08-16-13

SHEET OF

USERNAME => s109858 DATE PLOTTED => 18-SEP-2013 TIME PLOTTED => 14:02

V|=|

Dist	COUNTY	ROUTE	POST MILES TOTAL PROJECT	SHEET No.	TOTAL SHEETS
03, 08	Sac, SBd	5, 15	23.3, R107.3	215	330

REGISTERED ELECTRICAL MECHANICAL DATE 08-16-13

PLANS APPROVAL DATE 9-16-13

REGISTERED PROFESSIONAL ENGINEER MARK HEDGLIN No. M32912 Exp. 09-30-14 MECH STATE OF CALIFORNIA

The State of California or its officers or agents shall not be responsible for the accuracy or completeness of scanned copies of this plan sheet.

ACCESSIBILITY DESIGN APPROVAL STAMP DOT / DES / OTA

PROJECT ID **0800000229**

Reviewed by: Date: 10-25-11

CALIFORNIA STATE FIRE MARSHAL APPROVED

Approval of this plan does not authorize or approve any omission or deviation from applicable regulations. Final approval is subject to field inspection. One set of approved plans shall be available on the project site at all times.

Reviewed by: FRANCIS SOLICH

Approval date: 09-11-13

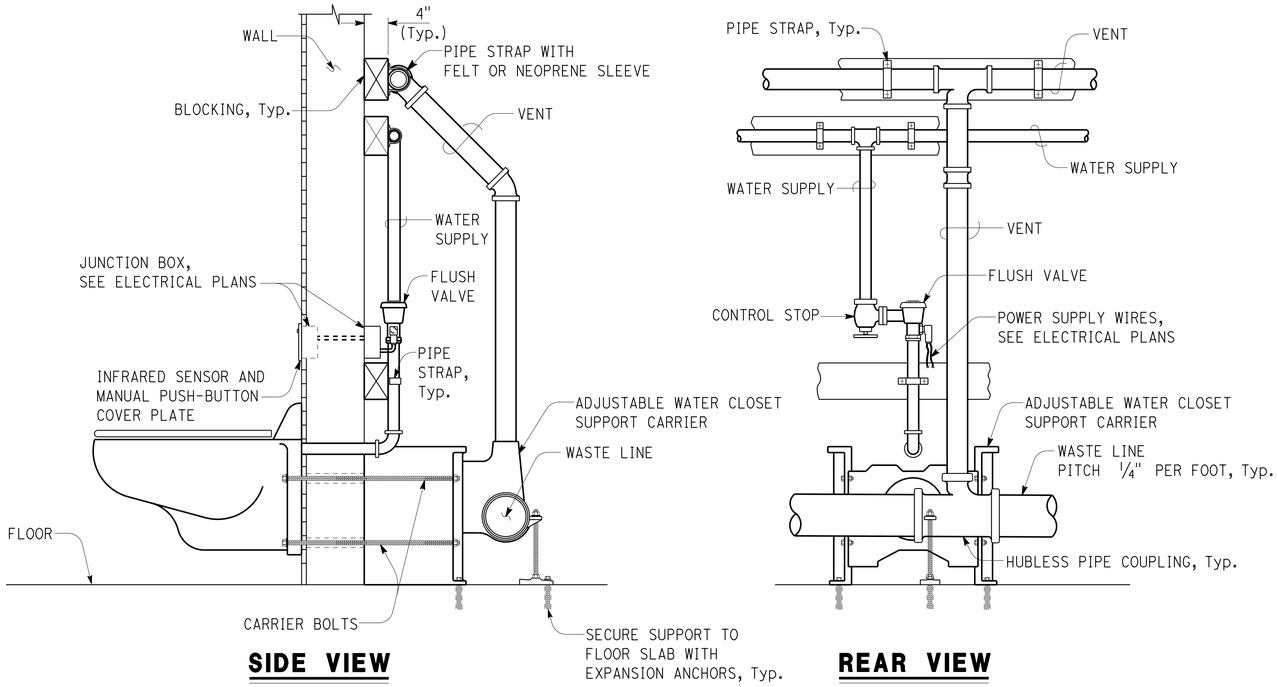

SIDE VIEW **REAR VIEW**

1 WATER CLOSET ROUGH-IN DETAIL

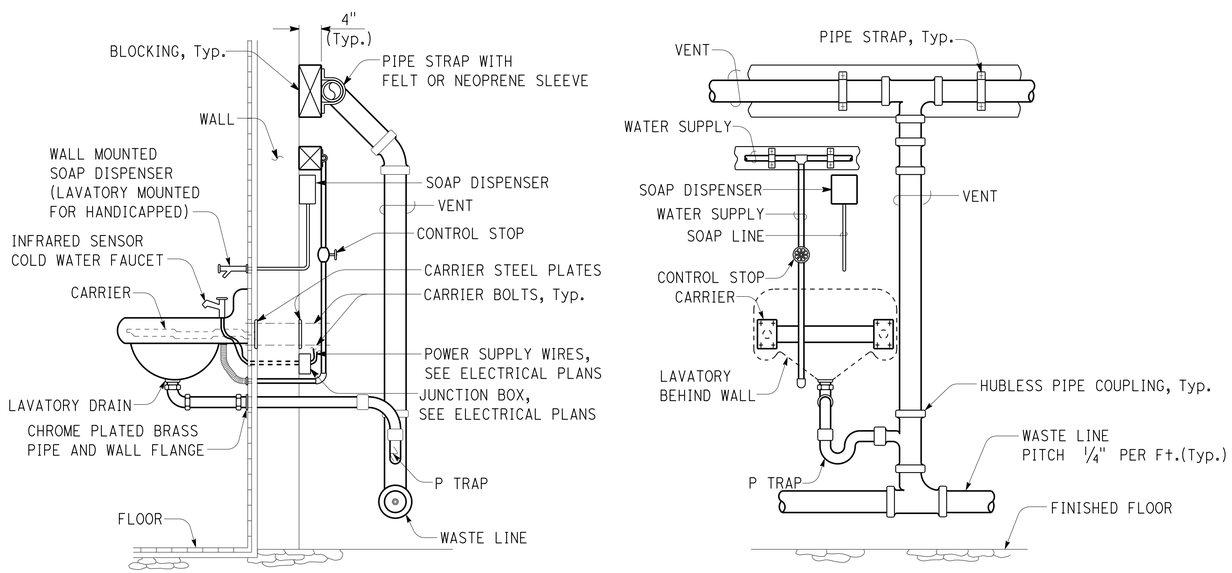

SIDE VIEW **REAR VIEW**

2 LAVATORY ROUGH-IN DETAIL

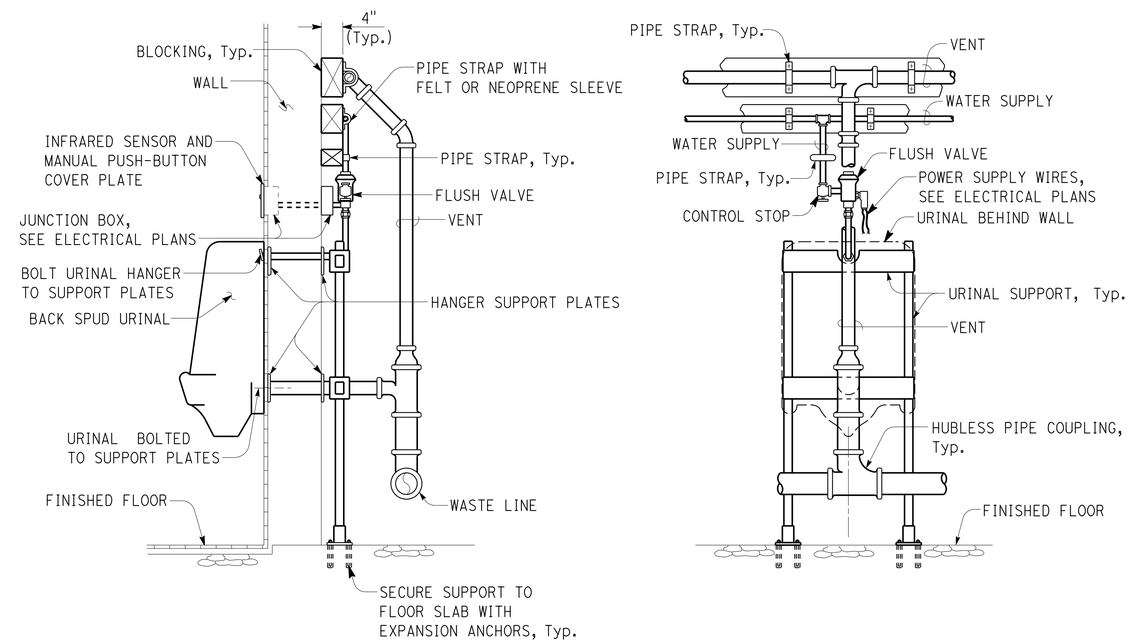

SIDE VIEW **REAR VIEW**

3 URINAL ROUGH-IN DETAIL

THIS DRAWING ACCURATE FOR MECHANICAL WORK ONLY

NO SCALE

	BY	CHECKED
DESIGN	Mark Hedglin	Seve Gutierrez
DETAILS	Mark Hedglin	Seve Gutierrez
QUANTITIES	Mark Hedglin	Seve Gutierrez

STATE OF CALIFORNIA DEPARTMENT OF TRANSPORTATION

DIVISION OF ENGINEERING SERVICES ELECTRICAL-MECHANICAL-WATER AND WASTEWATER DESIGN

BRIDGE NO. 540004R/L POST MILE R 107.3

C.V. KANE SAFETY ROADSIDE REST AREA REHABILITATION

PLUMBING/ROUGH-IN DETAILS

SHEET **M5-1**

TAEMWW imperial Rev. 3/12

FILE => m5_1.dgn DATE PLOTTED => 18-SEP-2013 TIME PLOTTED => 14:02

ORIGINAL SCALE IN INCHES FOR REDUCED PLANS 0 1 2 3

UNIT 3615 PROJECT NUMBER & PHASE 08000002291 EA 000000

DISREGARD PRINTS BEARING EARLIER REVISION DATES → REVISION DATES (PRELIMINARY STAGE ONLY) 10-15-09 12-17-09 02-19-10 04-15-10 10-28-10 11-18-10 02-11-11 07-11-11 01-05-12 08-16-13

SHEET OF

USERNAME => s109858 DATE PLOTTED => 18-SEP-2013 TIME PLOTTED => 14:02

V|=|

Dist	COUNTY	ROUTE	POST MILES TOTAL PROJECT	SHEET No.	TOTAL SHEETS
03, 08	Sac, SBd	5, 15	23.3, R107.3	216	330

REGISTERED ELECTRICAL MECHANICAL DATE 08-16-13

9-16-13
PLANS APPROVAL DATE

REGISTERED PROFESSIONAL ENGINEER MARK HEDGLIN No. M32912 Exp. 09-30-14 MECH STATE OF CALIFORNIA

The State of California or its officers or agents shall not be responsible for the accuracy or completeness of scanned copies of this plan sheet.

ACCESSIBILITY DESIGN APPROVAL STAMP DOT / DES / OTA
PROJECT ID 0800000229
Reviewed by:
Date: 10-25-11

CALIFORNIA STATE FIRE MARSHAL APPROVED
Approval of this plan does not authorize or approve any omission or deviation from applicable regulations. Final approval is subject to field inspection. One set of approved plans shall be available on the project site at all times.
Reviewed by: FRANCIS SOLICH
Approval date: 09-11-13

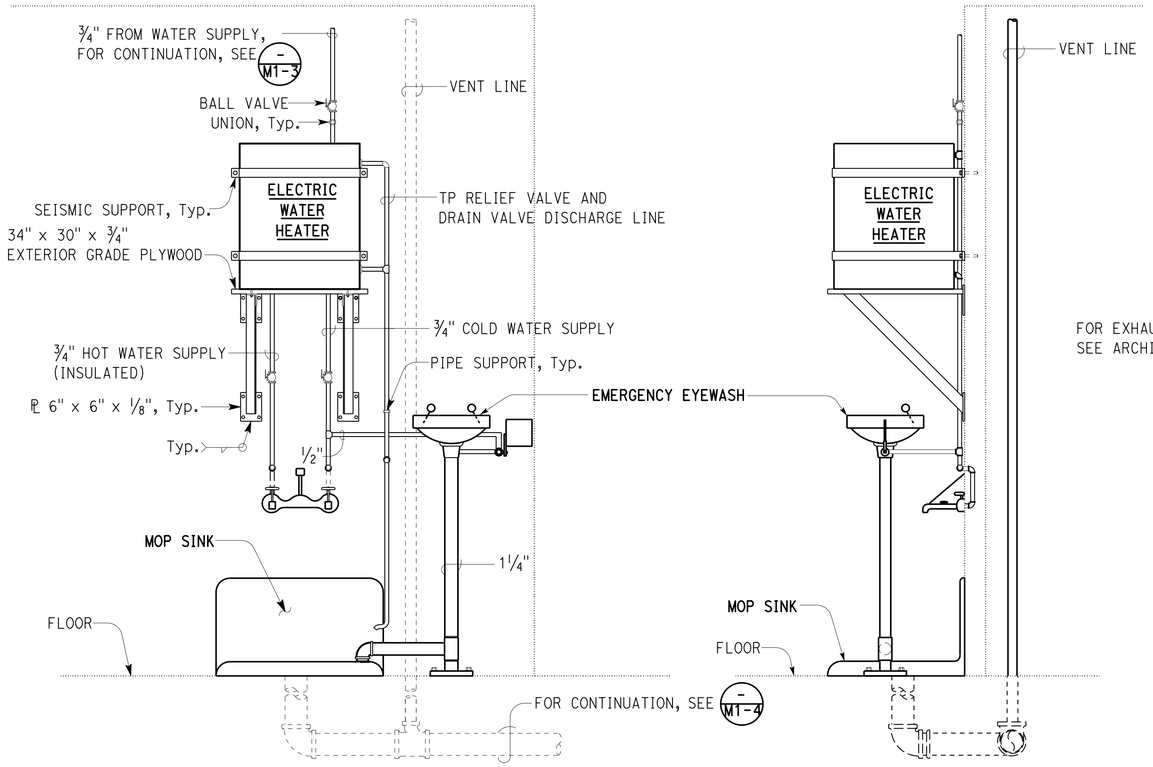

ELEVATION

SECTION

1 SINK & EYEWASH

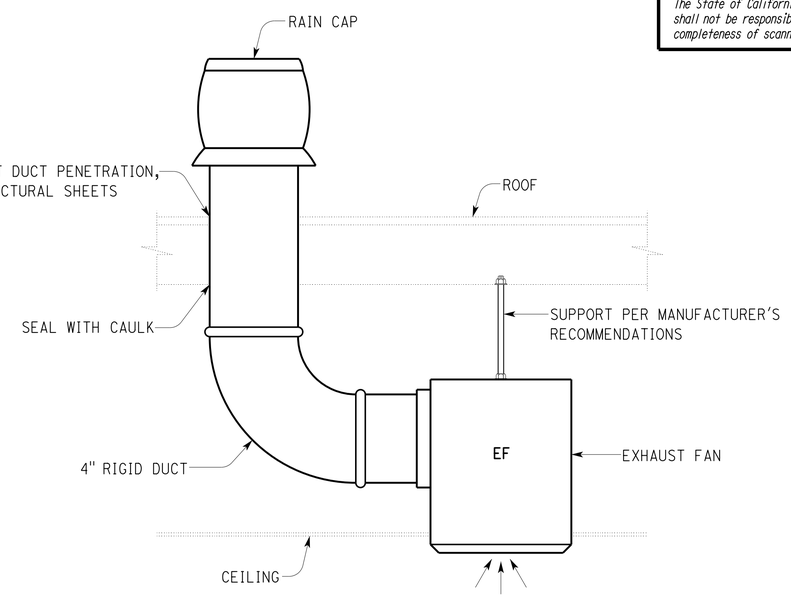

5 EXHAUST FAN

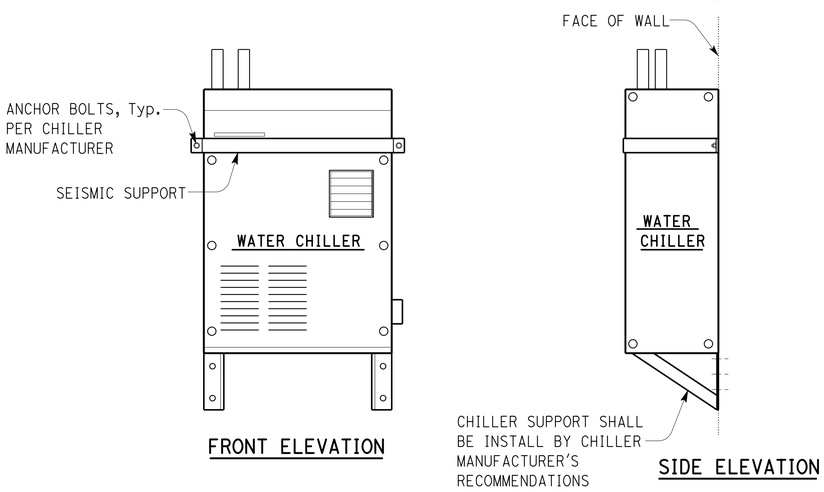

2 WATER CHILLER

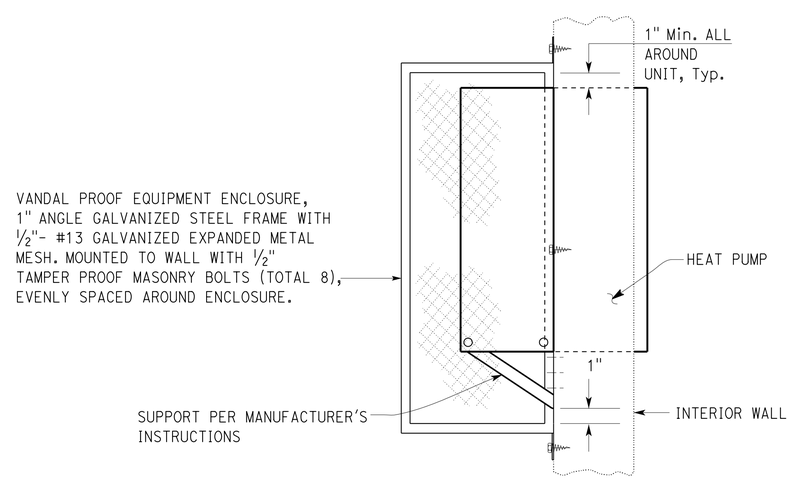

3 THRU WALL HEAT PUMP

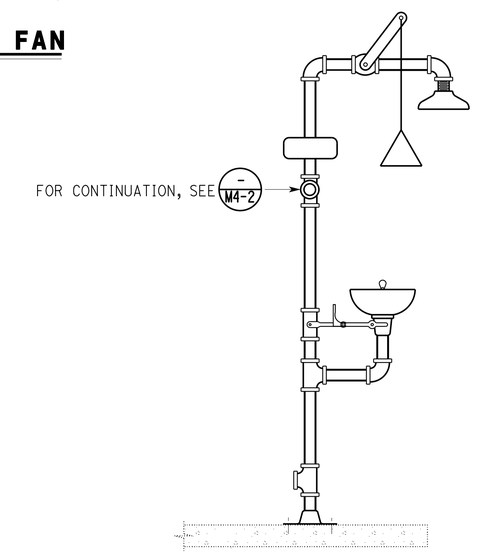

4 EMERGENCY EYEWASH & SHOWER

THIS DRAWING ACCURATE FOR MECHANICAL WORK ONLY

NO SCALE

	BY	CHECKED
DESIGN	Mark Hedglin	Seve Gutierrez
DETAILS	Mark Hedglin	Seve Gutierrez
QUANTITIES	Mark Hedglin	Seve Gutierrez

STATE OF CALIFORNIA DEPARTMENT OF TRANSPORTATION

DIVISION OF ENGINEERING SERVICES
ELECTRICAL-MECHANICAL-WATER AND WASTEWATER DESIGN

BRIDGE NO. 540004R/L
POST MILE R 107.3

C.V. KANE
SAFETY ROADSIDE REST AREA REHABILITATION
MECHANICAL DETAILS

SHEET M5-2

TAEMWW imperial Rev. 3/12
FILE => m5_2.dgn
DATE PLOTTED => 18-SEP-2013 TIME PLOTTED => 14:02

ORIGINAL SCALE IN INCHES FOR REDUCED PLANS 0 1 2 3

UNIT 3615
PROJECT NUMBER & PHASE 08000002291
EA 000000

DISREGARD PRINTS BEARING EARLIER REVISION DATES

REVISION DATES (PRELIMINARY STAGE ONLY) 10-15-09 12-17-09 02-19-10 04-15-10 10-28-10 11-18-10 02-14-11 07-11-11 01-05-12 08-16-13

SHEET OF

USERNAME => s109858 DATE PLOTTED => 18-SEP-2013 TIME PLOTTED => 14:02

VI=I

GRAPHIC SYMBOLS FOR ELECTRICAL WIRING AND LAYOUT DIAGRAMS

SYMBOL	DESCRIPTION
	POST-TOP ELECTROLIER
	POLE-ARM ELECTROLIER
	IN-GRADE FLOODLIGHT

CEILING	WALL	DESCRIPTION
S	S	SURFACE COMPACT FLUORESCENT, METAL HALIDE LIGHT EMITTING DIODE OR SODIUM VAPOR FIXTURE
R	R	RECESSED FLUORESCENT, METAL HALIDE, OR SODIUM VAPOR FIXTURE
P		PENDANT COMPACT FLUORESCENT, METAL HALIDE LIGHT EMITTING DIODE OR SODIUM VAPOR FIXTURE
		SURFACE, PENDANT OR CORNER INDIVIDUAL FLUORESCENT OR LIGHT EMITTING DIODE FIXTURE
		SURFACE, PENDANT OR CORNER CONTINUOUS ROW FLUORESCENT OR LIGHT EMITTING DIODE FIXTURES

NOTE: A LOWER CASE LETTER NEAR GRAPHIC LIGHTING FIXTURE SYMBOL DENOTES THAT FIXTURE IS CONTROLLED BY A SIMILARLY MARKED SWITCH, AN ALPHA-NUMERIC SYMBOL NEAR GRAPHIC LIGHTING FIXTURE SYMBOL DENOTES FIXTURE TYPE, (I=INCANDESCENT, F=FLUORESCENT, MH=METAL HALIDE, LED=LIGHT EMITTING DIODE CFL-COMPACT FLUORESCENT LAMP), DESIGN TYPE, OF LAMPS AND WATTAGE.

EXAMPLE : (4) F 2 - 2 x 32
- 32 WATT LAMPS
- 2 LAMPS
- DESIGN TYPE
- FLUORESCENT
- NUMBER OF FIXTURES

B	REMOTE BALLAST
J	JUNCTION BOX
JB	WEATHERPROOF CAST IRON JUNCTION BOX
TB	TRANSDUCER JUNCTION BOX
FO	FIBER OPTIC FLOAT SWITCH JUNCTION BOX
	SINGLE RECEPTACLE OUTLET
	DUPLEX RECEPTACLE OUTLET
(GFCI)	DUPLEX RECEPTACLE OUTLET (WITH GFCI)
(GFCI) WP	DUPLEX RECEPTACLE OUTLET, WEATHERPROOF (WITH GFCI)
	SINGLE, SPECIAL PURPOSE RECEPTACLE OUTLET
	DUPLEX, SPECIAL PURPOSE RECEPTACLE OUTLET
R	RANGE OUTLET
	FLOOR SPECIAL PURPOSE OUTLET
	FLOOR RADIO OUTLET
	FLOOR TELEPHONE OUTLET
	MULTI-FLOOR OUTLET, 2 OR MORE GANG
	MULTI-OUTLET ASSEMBLY
S	SINGLE POLE SWITCH
S_2	DOUBLE POLE SWITCH
S_3	THREE WAY SWITCH
S_D	AUTOMATIC DOOR
S_K	KEY OPERATED SWITCH
S_P	SWITCH AND PILOT LIGHT
S_{MC}	MOMENTARY CONTACT SWITCH
S_{RC}	REMOTE CONTROL SWITCH
S_{WP}	WEATHERPROOF SWITCH
S_F	FAN SWITCH
S_L	LIGHT SWITCH
S_H	HEATER SWITCH
S_{BTS}	BYPASS TIMER SWITCH
S_{CHLF}	TWO SWITCHES, ONE SWITCH FOR LIGHT AND FAN AND TIMER SWITCH FOR HEAT LAMP
SS	SELECTOR SWITCH

SYMBOL	DESCRIPTION
S_{OC1}	OCCUPANCY SENSOR WALL SWITCH, SINGLE LEVEL
S_{OC2}	OCCUPANCY SENSOR WALL SWITCH, BILEVEL
S_M	MOTION SENSOR SWITCH
S_T	MANUAL MOTOR STARTING SWITCH, THERMAL OVERLOAD TYPE
S_{TS}	FAN TIMER SWITCH
T_S	TIMER SWITCH
S_S	SWITCH AND SINGLE RECEPTACLE
S_S	SWITCH AND DUPLEX RECEPTACLE
	FUSES
H	HAND DRYER
	RADIO OUTLET
	TELEPHONE OUTLET
	SURGE PROTECTIVE DEVICE
	PUSHBUTTON
L	PUSHBUTTON STATION, NC, WITH LOCKING DEVICE FOR OPEN
	PUSHBUTTON STATION MOTOR CONTROL
	BUZZER
	BELL
T L	THERMOSTAT LINE VOLTAGE
T	THERMOSTAT
PS	PRESSURE SWITCH
R	CONTROL RELAY
FS	FLOW SWITCH
PEC	PHOTOELECTRIC CELL
PEU	PHOTOELECTRIC UNIT
SO	SOLENOID VALVE OPERATOR
CM	CONTROL MODULE
	SURFACE-MOUNTED CONTROL PANELS AND STATIONS
	SURFACE-MOUNTED PANELBOARDS
	PANEALBOARD AND CONTROL STATIONS MOUNTED INSIDE INTEGRATED FACILITIES SWITCHBOARD
	SERVICE AND DISTRIBUTION SWITCHBOARD
MC	MOTOR CONTROLLER
	DISCONNECT SWITCH
	CONDUIT CONCEALED IN CEILING OR WALL
	CONDUIT CONCEALED IN FLOOR
	CONDUIT EXPOSED
	CROSS-LINES INDICATE NUMBER OF #12 AWG CONDUCTORS. LONGER CROSS-LINE INDICATES 1#12 AWG (G) FOR EQUIPMENT GROUNDING CONDUCTOR. NO CROSS-LINE INDICATES 2#12 WITH 1#12 (G) UNLESS OTHERWISE NOTED. ALL CONDUIT 1/2" UNLESS OTHERWISE NOTED.
A1, A2	HOMERUN TO PANELBOARD, ARROWS INDICATE NUMBER OF CIRCUITS, LETTER DENOTES PANEL-BOARD, NUMERAL DENOTES CIRCUIT.
SM	SURFACE METAL RACEWAY

(2) 1/2"C, PVC, 2#12
- CONDUCTOR INFO (PER CONDUIT)
- CONDUIT TYPE
- CONDUIT SIZE
- NUMBER OF CONDUITS (NO NUMBER INDICATES ONE CONDUIT)

MC	CONDUIT, RIGID STEEL, UNDERGROUND
PVC	CONDUIT, POLYVINYL CHLORIDE, UNDERGROUND
	CONDUIT, FLEXIBLE
	CONDUIT, TURN UP
	CONDUIT, TURN DOWN
	CONDUIT SEAL, EXPLOSION-PROOF
X	CONDUIT, EXPANSION JOINT
	ADAPTER, ONE TYPE CONDUIT TO ANOTHER
	POLE

SYMBOL	DESCRIPTION
OC	OCCUPANCY SENSOR
H	HEAT DETECTOR
PC	PEOPLE COUNTER
P	MANUAL PULL STATION
AV	AUDIO/VISUAL ALARM DEVICE
G	GLASS BREAK DISCRIMINATOR
C	MAGNETIC CONTACT SWITCH-PEDESTRIAN DOOR
C	MAGNETIC CONTACT SWITCH-VEHICLE DOOR
K	KEYPAD FOR ALARM SYSTEM
W	COMBINATION DETECTOR (MICROWAVE/PASSIVE INFRARED)
	PULL BOX-LETTER INDICATES TYPE OF PULL BOX (E-ELECTRICAL, T-TELEPHONE, R-RADIO)
(T)	PULL BOX (TRAFFIC RATED)-LETTER INDICATES TYPE OF PULL BOX (E-ELECTRICAL, T-TELEPHONE, R-RADIO)
CHLF	COMBINATION HEAT, LIGHT AND FAN UNIT
A / EE-2	— SECTION/ELEVATION LETTER — SHEET NUMBER
1 / EE-2	— DETAIL NUMBER — SHEET NUMBER

REMODEL WORK

SYMBOL	DESCRIPTION
	EXISTING FLUORESCENT FIXTURE-TO REMAIN
	EXISTING FLUORESCENT FIXTURE-REMOVE
	EXISTING INCANDESCENT FIXTURE-TO REMAIN
	EXISTING INCANDESCENT FIXTURE-REMOVE
	EXISTING OUTLET-TO REMAIN
	EXISTING RECEPTACLE OUTLET-TO REMAIN
	EXISTING RECEPTACLE OUTLET-REMOVE
—E—E—	EXISTING POWER CONDUIT AND CONDUCTORS-TO REMAIN UNLESS OTHERWISE NOTED
—✱✱—	EXISTING CONDUIT AND CONDUCTORS-REMOVE
S	EXISTING SWITCH-TO REMAIN
	EXISTING SWITCH-REMOVE
J	EXISTING JUNCTION BOX-TO REMAIN
	EXISTING JUNCTION BOX-REMOVE
—T—T—	EXISTING TELEPHONE CONDUIT AND CABLES-TO REMAIN UNLESS OTHERWISE NOTED

STANDARD PLANS

DATED MAY, 2006

- RSP ES-1A
- RSP ES-5A
- RSP ES-6A
- ES-5B
- ES-5D
- ES-13A
- ES-13B
- NSP ES-8A
- NSP ES-8B
- NSP ES-10A
- NSP ES-10B

GRAPHIC SYMBOLS FOR ELECTRICAL DIAGRAMS

SYMBOL	DESCRIPTION
	CIRCUIT BREAKER, SINGLE POLE
	CIRCUIT BREAKER, DOUBLE POLE
	CIRCUIT BREAKER, THREE POLE
GFCI	CIRCUIT BREAKER, WITH GROUND FAULT CIRCUIT INTERRUPTER
	CONTACT, NORMALLY OPEN
	CONTACT, NORMALLY CLOSED
	CONTACT, NORMALLY CLOSED, TIME DELAY CLOSING ON DE-ENERGIZING
	CONTACT, NORMALLY OPEN, TIME DELAY OPENING ON DE-ENERGIZING
	CONTACT, NORMALLY OPEN, TIME DELAY CLOSING ON ENERGIZING
	CONTACT, NORMALLY CLOSED, TIME DELAY OPENING ON ENERGIZING
	CONTACT, SINGLE POLE DOUBLE-THROW
	OPERATING COIL
	LIQUID LEVEL ACTUATED SWITCH, NORMALLY CLOSED
	LIQUID LEVEL ACTUATED SWITCH, NORMALLY OPEN
	PRESSURE ACTUATED SWITCH, NORMALLY CLOSED
	PRESSURE ACTUATED SWITCH, NORMALLY OPEN
	FLOW ACTUATED SWITCH, NORMALLY CLOSED
	FLOW ACTUATED SWITCH, NORMALLY OPEN
	TEMPERATURE ACTUATED SWITCH, NORMALLY CLOSED
	TEMPERATURE ACTUATED SWITCH, NORMALLY OPEN
	LIMIT SWITCH, NORMALLY CLOSED
	LIMIT SWITCH, NORMALLY OPEN
	PUSHBUTTON SWITCH, NORMALLY CLOSED
	PUSHBUTTON SWITCH, NORMALLY OPEN
	SWITCH, SINGLE-POLE
	SWITCH, SINGLE-POLE, DOUBLE-THROW
	SWITCH, DOUBLE-POLE
	SWITCH, DOUBLE-POLE, DOUBLE-THROW
	SWITCH, SINGLE-POLE, 3-POSITION
	THERMAL OVERLOAD
	FUSE
	RESISTOR
	VARIABLE RESISTOR
	TRANSFORMER WINDING
	GROUNDING ELECTRODE
	ENCLOSURE BOND
A	PILOT LIGHT (A=AMBER, G=GREEN, R=RED)
G	GENERATOR
M	MOTOR
F	FAN MOTOR
	VALVE, SOLENOID

PROJECT NOTES

A. SEPARATE GROUNDED (NEUTRAL) CONDUCTOR SHALL BE USED FOR EACH 120-VOLT CIRCUIT.

B. HOMERUNS TO PANELBOARDS SHALL BE INSTALLED AS SHOWN ON THE PLANS. HOMERUNS SHALL NOT BE COMBINED.

C. A SINGLE INSULATED EQUIPMENT GROUNDING CONDUCTOR (SIZED AS REQUIRED) SHALL BE INSTALLED IN EACH CONDUIT RUN.

CALIFORNIA STATE FIRE MARSHAL APPROVED

Approval of this plan does not authorize or approve any omission or deviation from applicable regulations. Final approval is subject to field inspection. One set of approved plans shall be available on the project site at all times.

Reviewed by: FRANCIS SOLICH

Approval date: 09-11-13

DIST.	COUNTY	ROUTE	POST MILES TOTAL PROJECT	SHEET NO.	TOTAL SHEETS
03, 08	Sac, SBd	5, 15	23.3, R107.3	217	330

REGISTERED ELECTRICAL ENGINEER — 08-15-13 DATE

REGISTERED PROFESSIONAL ENGINEER — JASWINDER GILL — No. 18551 — Exp. 12-31-14 — ELEC — STATE OF CALIFORNIA

9-16-13
PLANS APPROVAL DATE

The State of California or its officers or agents shall not be responsible for the accuracy or completeness of electronic copies of this plan sheet.

ABBREVIATIONS:

A/C	AIR CONDITIONING UNIT
ACD	AMPERE CURRENT DISCONNECT
AI	ANALOG INPUT
AL	ALARM LIGHT
ALT	ALTERNATOR TIMER SWITCH
AO	ANALOG OUTPUT
AR	ALARM RESET
AT	ALARM TEST
ATS	AERATOR TIMER SWITCH
AVC	AIR VOLUME CONTROLLER
CAR	COMMON ALARM RESET
CD	CONTROL DISCONNECT
CR	CONTROL RELAY
CS	CURRENT SENSOR
CT	CONTROL TRANSFORMER
DCD	DIRECT CURRENT DISCONNECT
DI	DIGITAL INPUT
DO	DIGITAL OUTPUT
(E)	EXISTING
ELCS	EXTERIOR LIGHTING CONTROL STATION
EF	EXHAUST FAN
F	FUSE
FS	FLOAT SWITCH
FT	FLOAT TRANSCEIVERS
G	GROUND
GB	GROUND BUS
GFCI	GROUND FAULT CIRCUIT INTERRUPTER
IFS	INTEGRATED FACILITY SWITCHBOARD
ILCS	INTERIOR LIGHTING CONTROL STATION
IR	INDUCTION RELAY
ISR	INTRINSICALLY SAFE RELAY
JB	JUNCTION BOX
LC	LIGHTING CONTACTOR
LR	LOCAL RELAY
LVCP	LOW VOLTAGE CONTROL PANEL
MB	MAIN BREAKER
MC	METALLIC CONDUIT
MCC	MOTOR CONTROL CENTER
MD	MAIN DISCONNECT
MS	MOTOR SAVER
MSB	MAIN SWITCHBOARD
(N)	NEW
NIC	NOT IN CONTRACT
N/B	NORTHBOUND
OL	OVERLOAD
PES	PHOTOELECTRIC SENSOR
PD	PUMP DISCONNECT
PL	PILOT LIGHT
PLC	PROGRAMABLE LOGICAL CONTROLLER
PLY	PILOT LIGHT LOW VOLTAGE
PS	PRESSURE SWITCH
PS	POWER SUPPLY
PV	PHOTOVOLTAIC
PVC	POLYVINYL CHLORIDE
PWBP	POTABLE WATER BOOSTER PUMP
PWPT	POTABLE WATER PRESSURE TANK
PWST	POTABLE WATER STORAGE TANK
RC	RECEIVER
RO	REVERSE OSMOSIS
RR	REMOTE RELAY
RWBP	RAW WATER BOOSTER PUMP
RWPT	RAW WATER PRESSURE TANK
RWST	RAW WATER STORAGE TANK
S	STARTER COIL
SD	STARTER DISCONNECT
SFR	SEAL FAILURE RELAY
SPD	SURGE PROTECTIVE DEVICE
S/B	SOUTHBOUND
SRRA	SAFETY ROADSIDE REST AREA
SS	SELECTOR SWITCH
SSR	SELECTOR SWITCH REMOTE
ST	STARTER
SV	SOLENOID VALVE
TB	TERMINAL BLOCK
TDR	TIME DELAY RELAY
TM	TIME METER
TR	TRANSMITTER
TS	TIMER SWITCH
TTB	TELEPHONE TERMINAL BOARD
TYP	TYPICAL
UPS	UNINTERRUPTIBLE POWER SUPPLY
WP	WEATHERPROOF

	BY	CHECKED
DESIGN	Jaswinder Gill	J. S. Sandhu
DETAILS	Ed D. Tapalla	Jaswinder Gill
QUANTITIES	Jaswinder Gill	J. S. Sandhu

STATE OF CALIFORNIA
DEPARTMENT OF TRANSPORTATION

DIVISION OF ENGINEERING SERVICES
ELECTRICAL-MECHANICAL-WATER AND WASTEWATER DESIGN

BRIDGE NO. 540004R/L
POST MILE R107.3

C. V. KANE
SAFETY ROADSIDE REST AREA REHABILITATION
LEGEND

SHEET EEO-01.0

DOES SD Imperial Rev. 9/02

ORIGINAL SCALE IN INCHES FOR REDUCED PLANS 0 1 2 3

UNIT 3596
PROJECT NUMBER & PHASE 08000002291

DISREGARD PRINTS BEARING EARLIER REVISION DATES →

REVISION DATES (PRELIMINARY STAGE ONLY) 12/17/09 02/18/10 04/26/10 6/14/10 10/25/10 01/28/11 11/4/11 8/15/13 SHEET OF

19-SEP-2013 07:31

eeO_01_00.dgn

DIST.	COUNTY	ROUTE	POST MILES TOTAL PROJECT	SHEET NO.	TOTAL SHEETS
03, 08	Sac, SBd	5, 15	23.3, R107.3	218	330

Jaswinder S. Gill
REGISTERED ELECTRICAL ENGINEER — 08-15-13 DATE

REGISTERED PROFESSIONAL ENGINEER — JASWINDER GILL — No. 18551 — Exp. 12-31-14 — ELEC — STATE OF CALIFORNIA

9-16-13
PLANS APPROVAL DATE

The State of California or its officers or agents shall not be responsible for the accuracy or completeness of electronic copies of this plan sheet.

CERTIFICATE OF COMPLIANCE (Page 1 of 4) OLTG-1C

Project Name: C.V. KANE SAFETY ROADSIDE REST AREA REHABILITATION
Date: 8-15-13

Project Address: 15 MILES EAST OF NEWBERRY SPRINGS, CA 92365
Total Hardscape Illuminated Area: 215,933 SQUARE FEET

General Information

Phase of Construction: ☑ New Construction ☐ Addition ☐ Alteration

Documentation Author's Declaration Statement

- I Certify that this Certificate of Compliance documentation is accurate and complete.

Name: JASWINDER GILL
Signature: Jaswinder S. Gill
Company: CA DEPARTMENT OF TRANSPORTATION
Date: 8-15-13
Address: 1801 30TH STREET, MS:9-3/11H
If applicable: CEA # CEPE #
City/State/Zip: SACRAMENTO, CA-95816
Phone: (916) 227-9492

Principal Lighting Designer's Declaration Statement

- I am eligible under Division 3 of the California Business and Professions Code to accept responsilbilty for the lighting design.
- This Certificate of Compliance identifies the lighting features and performance specification required for compliance with Title 24, Pages 1 and 6 of the California Code of Regulations.
- The design features represented on this Certificate of Compliance are consistent with the information provided to document this design on the other applicable compliance forms, worksheets, calculations, plans and specifications submitted to the enforcement agency for approval with this building permit application.

Name: JASWINDER GILL
Signature: Jaswinder S. Gill
Company: CA DEPARTMENT OF TRANSPORTATION
Phone: (916) 227-9492
Address: 1801 30TH STREET, MS:9-3/11H
License # E 18551
City/State/Zip: SACRAMENTO, CA-95816
Date: EXP 12-31-14

Principal Lighting Designer's Declaration

☑ I Certify that this Certificate of Compliance documentation is accurate and complete, and accounts for all outdoor lighting power, including building mounted, pole mounted, as well as all other outdoor lighting designed for the site, and that Additional Lighting Power Allowances for Specific Applications or Additional Lighting Power Allowances for Ordinance Requirements have not been counted more than one time for the same area, in Accordance with Section 147 of the Standards.

Outdoor Lighting Mandatory Measures
Indicate location on building plans of Mandatory Measures Note Block: EE1-0.1

LIGHTING COMPLIANCE FORMS & WORKSHEETS (check box if worksheet is included)

For detailed instructions on the use of this and all Energy Effeciency Standards compliance forms, please refer to the Nonresidential Manual published by the California Energy Commission.

☑	OLTG-1C	Certificate of Compliance. All 4 pages required on plans for all submittal.
☑	OLTG-2C	(Page 1 of 3) Lighting Wattage Allowances for General Hardscape, Sales Frontage, or Ornamental Lighting. Optional on plans.
☑	OLTG-2C	(Page 2 of 3) Lighting Wattage Allowances for Per Application or Per Area. Optional on plans.
☐	OLTG-2C	(Page 3 of 3) Additional Lighting Power Allowance for Ordinance Requirements. Optional on plans.

CERTIFICATE OF COMPLIANCE (Page 2 of 4) OLTG-1C

COMPLIANCE FIXTURE/LIGHTING CONTROL SCHEDULE and FIELD INSPECTION CHECKLIST

Project Name: C.V. KANE SAFETY ROADSIDE REST AREA REHABILITATION
Date: 8-15-13

INSTALLATION CERTIFICATE, OLTG-1-INST (Retain a copy and verify form is completed and signed.) — Field Inspection ☐

CERTIFICATE OF ACCEPTANCE, OLTG-2A (Retain a copy and verify form is completed and signed.) — Field Inspection ☐

Luminaire Schedule			Installed Watts							
A	B	C	D	E	F		G	H	I	
					How wattage was determined				Field Inspector 2	
Name Or Item Tag	Luminaire Description See footnote below (i.e, lamp pole top shoe-box 400 watt metal halide)	Cutoff Designation	Watts per Luminaire 1	Special Features	Default from NA-8	According to S 130 (d or e)	Number of Luminaires	Installed Watts (D x G)	Pass	Fail
LED2	2X4 Surface, LED Lamps, 2 x17 W LED Tube	FC	44	☐	☐	☑	3	132	☐	☐
LED3	Pole Top, Full Cutoff, Electronic Driver, 120LED's	FC	140	☐	☐	☑	35	4900	☐	☐
CFL1	Wall mount, 1-42 W TRT Fluorescent, Electronic Ballast	C	50	☐	☐	☑	5	250	☐	☐
CFL2	Canopy mount, 1-42W TRT Fluorescent, Electronic Ballast	C	50	☐	☐	☑	16	800	☐	☐
MH1	Post Top, Cutoff, Pulse-start, 1x100W MH	C	130	☐	☐	☑	31	4030	☐	☐
MH2	WALL MOUNT, CUT-OFF, PULSE-START, 1X70W MH	C	100	☐	☐	☑	2	200	☐	☐
				☐	☐	☐			☐	☐
	Enter total into OLTG; Page 4 of 4; Row H; Total Installed Watts:							10,312		

1. Type of luminaire (i.e.: post top, wall pack, surface, shoe box); for non-incandescent luminaires, indicate nominal lamp wattage and lamp type (i.e.: flourescent incandescent, HID); ballast type (i.e.: electronic or magnetic); number of lamps and number of ballast per luminaire. For incandescent luminaires the luminaire wattage listed in column D shall be the maximum relamping rated wattage on a permanent factory-installed label on the luminaire. NOT the wattage of the lamp (bulb) used, in accordance with Section 130 (d or e).
2. If Fail then describe on Page 2 of the Inspection Checklist Form and take appropriate action to correct. Verify building plans if necessary.

EXEMPT LUMINAIRES — Field Inspection ☐

Name or Symbol	Description of exempt luminaires in accordance with S 147

MANDATORY CONTROLS — Field Inspection ☐

#	Description	Location	#	Description	Location
1	Astro TC, Photocell	Car/Truck Parking	4	Astro TC, Photocell	Interpretive Center
2	Astro TC, Photocell	Building Exterior			
3	Astro TC, Photocell	Picnic Shelters			

SPECIAL FEATURES INSPECTION CHECKLIST (See Page 2 of 4 of OLTG-1C)

The local enforcement agency should pay special attention to the items specified in this checklist. These items require special written justification and documentation, and special verification. The local enforcement agency determines the adequacy of the justification, and may reject a building or design that otherwise coplies base on the adequacy of the special justification and documentations submitted.

Field Inspector Notes or Discrepancies:

CALIFORNIA STATE FIRE MARSHAL APPROVED
Approval of this plan does not authorize or approve any omission or deviation from applicable regulations. Final approval is subject to field inspection. One set of approved plans shall be available on the project site at all times.
Reviewed by: FRANCIS SOLICH
Approval date: 09-11-13

GENERAL NOTES:
Form OLTG-1-C, Parts 1 of 4 and 2 of 4 are shown on this sheet.
Form OLTG-1-C, Parts 3 of 4 and 4 of 4 are shown on sheet EE0-1.2.
Other checked forms are available upon request.

THIS DRAWING ACCURATE FOR ELECTRICAL WORK ONLY

	BY	CHECKED
DESIGN	Jaswinder Gill	J. S. Sandhu
DETAILS	Ed D.Tapalla 4/10	Jaswinder Gill
QUANTITIES	Jaswinder Gill	J. S. Sandhu

STATE OF CALIFORNIA
DEPARTMENT OF TRANSPORTATION

DIVISION OF ENGINEERING SERVICES
ELECTRICAL-MECHANICAL-WATER AND WASTEWATER DESIGN

BRIDGE NO. 540004R/L
POST MILE R107.3

C. V. KANE
SAFETY ROADSIDE REST AREA REHABILITATION
OUTDOOR LIGHTING COMPLIANCE FORMS 1

SHEET EE0-01.1

DOES SD Imperial Rev. 9/02

ORIGINAL SCALE IN INCHES FOR REDUCED PLANS 0 1 2 3

UNIT 3596
PROJECT NUMBER & PHASE 08000002291

DISREGARD PRINTS BEARING EARLIER REVISION DATES → REVISION DATES (PRELIMINARY STAGE ONLY) 9/28/10 6/24/10 10/28/10 01/28/11 11/4/11 8/15/13 SHEET OF

18-SEP-2013 14:02
ee0_01_01.dgn

DIST.	COUNTY	ROUTE	POST MILES TOTAL PROJECT	SHEET NO.	TOTAL SHEETS
03, 08	Sac, SBd	5, 15	23.3, R107.3	219	330

Jaswinder S Gill 08-15-13
REGISTERED ELECTRICAL ENGINEER DATE

REGISTERED PROFESSIONAL ENGINEER JASWINDER GILL No. 18551 Exp. 12-31-14 ELEC STATE OF CALIFORNIA

9-16-13
PLANS APPROVAL DATE

The State of California or its officers or agents shall not be responsible for the accuracy or completeness of electronic copies of this plan sheet.

CERTIFICATE OF COMPLIANCE (Page 3 of 4) OLTG-1C

Project Name: C.V. KANE SAFETY ROADSIDE REST AREA REHABILITATION
Date: 8/15/13

A. OUTDOOR LIGHTING ZONE

OUTDOOR LIGHTING ZONE: ☐ OLZ 1 ☑ OLZ 2 ☐ OLZ 3 ☐ OLZ 4

Is the Outdoor Lighting Zone: ☑ Default in accordance with S 10-114, or ☐ Amended by JHA

Complete the information below if the default Outdoor Lighting Zone has been amended by the local jurisdiction having authority (JHA):

☐ The site is a government designated park, recreation area, wildlife preserve, or portion thereof, and has been designated as LZ2 or LZ3, in accordance with Table 10-114-A, because the site is contained within such a zone.
☐ The local jurisdiction having authority has officially adopted a change to the State Default Lighting Zone and has notified the Energy Commission by providing the materials required in S 10-114(d) to the Executive Director.
☐ The adopted change is posted on the Energy Commission website.

B. ADDITIONAL LIGHTING POWER ALLOWANCE FOR ORDINANCE REQUIREMENTS

Are additional lighting power allowances for ordinance in Table 147-C used? Yes ☐ No ☑

Complete the information below if the additional lighting power allowances for ordinance requirements are used:

☐ The local jurisdiction having authority has officially adopted specific outdoor light levels, which are express as average or minimum footcandle levels, by following a public notification review, and comment about the proposed changed.
☐ The local jurisdiction having authority which adopted specific outdoor light levels and has notified the Commission by providing the following materials required S 10-114(f) to the Executive Director.

C. ACCEPTANCE FORMS

Required Acceptance Tests

Designer:
This form is to be used by the designer and attached to the plans. Listed below is the acceptance tests for for the Lighting system,
OLTG-2A. The designer is required to check the acceptance tests and list all control devices serving the building or space shall be certified as meeting the Acceptance Requirements for Code Compliance. If all the lighting system or control of a certain type requires a tests, list the different lighting and the number of systems. The NA7 Section in the Appendix of the Nonresidential Reference Appendices Manual describes the test. Since this form will be a part of the plans, completion of this section will allow the responsible party to budget for the scope of work appropriately. Forms can be grouped by type of Luminaire controlled.

Enforcement Agency:
System Acceptance. Before Occupancy Permit is granted for a newly contructed building or space or when ever new lighting system with controls is installed in the building or space shall be cerified as meeting the Acceptance Requirements.
The OLTG-2A form is not considered a complete form and is not to be accepted by the enforcement agency unless the boxes are checked and/or filled and signed. In addition, a Certificate of Acceptance forms shall be submitted to the enforcement that certifies plans, specifications, installation certificates and, operating and maintenance information meet the requirements of S 10-103(b) of Title 24 Part 6. The field inspector must receive the properly filled out and signed forms before the building can receive final occupancy. A copy of the OLTG-2A for each different lighting luminaire control(s) must be provided to the owner of the building for their records.

	Luminaires Controlled			Certificate of Acceptance OLTG-2A[1]
Equipment Requiring Testing	Description	Number of like Controls	Location	Outdoor Lighting Acceptance Tests
ELCS	Astro TC, Photocell	2	Electrical Room Comfort Station A and B	✓

1. Insert: OMS for Outdoor Motion Sensor; OLSC for Outdoor Lighting Shutoff Controls; OP for Outdoor Photocontrol; ATS for Astronomical Time Switch; and, STS for Standard (non-astronomical) Time Switch acceptance.

CERTIFICATE OF COMPLIANCE (Page 4 of 4) OLTG-1C

COMPLIANCE FIXTURE/LIGHTING CONTROL SCHEDULE and FIELD INSPECTION CHECKLIST

Project Name: C.V. KANE SAFETY ROADSIDE REST AREA REHABILITATION
Date: 8/15/13

ALLOWED AND INSTALLED OUTDOOR LIGHTING POWER

		Lighting Wattage Power Allowance
A	Lighting power allowance for general hardscape (from OLTG-2C Page 1 of 3)	14,007
B	Specific application lighting wattage per unit length (from OLTG-2C Page 1 of 3)	0
C	Specific application wattage allowance for ornamental lighting (from OLTG-2C Page 1 of 3)	4,030
D	Specific application wattage allowance per application (from OLTG-2C Page 2 of 3)	350
E	Specific application lighting wattage allowance per area (from OLTG-2C Page 2 of 3)	493
F	Additiona lighting power allowance for ordinance requirements (from OLTG-2C Page 3 of 3)	0
G	Total Allowed Wattage=Sum of rows A through F	18,880
H	Total installed Watts from Luminaire Schedule, (from OLTG-1C Page 2 of 4)	10312

Provided that the lighting wattage power allowance listed in rows A through F are identical to the lighting wattage power allowance taken from OLTG-2C pages 1 through 3, complies if installed Wattage in row H is less than or equal to the Total Installed Wattage in row G: ☑ Yes ☐ No

NOTES:

CALIFORNIA STATE FIRE MARSHAL APPROVED
Approval of this plan does not authorize or approve any omission or deviation from applicable regulations. Final approval is subject to field inspection. One set of approved plans shall be available on the project site at all times.
Reviewed by: FRANCIS SOLICH
Approval date: 09-11-13

THIS DRAWING ACCURATE FOR ELECTRICAL WORK ONLY

	BY	CHECKED
DESIGN	Jaswinder Gill	J. S. Sandhu
DETAILS	Ed D.Tapalla 4/10	Jaswinder Gill
QUANTITIES	Jaswinder Gill	J. S. Sandhu

STATE OF CALIFORNIA DEPARTMENT OF TRANSPORTATION

DIVISION OF ENGINEERING SERVICES ELECTRICAL-MECHANICAL-WATER AND WASTEWATER DESIGN

BRIDGE NO. 540004R/L
POST MILE R107.3

C. V. KANE SAFETY ROADSIDE REST AREA REHABILITATION
OUTDOOR LIGHTING COMPLIANCE FORMS 2

SHEET EE0-01.2

DOES SD Imperial Rev. 9/02

ORIGINAL SCALE IN INCHES FOR REDUCED PLANS 0 1 2 3

UNIT 3596
PROJECT NUMBER & PHASE 08000002291

DISREGARD PRINTS BEARING EARLIER REVISION DATES → REVISION DATES (PRELIMINARY STAGE ONLY) 4/28/10 5/24/10 10/25/10 01/28/11 11/4/11 8/15/13 SHEET OF

18-SEP-2013 14:02
ee0_01_02.dgn

DIST.	COUNTY	ROUTE	POST MILES TOTAL PROJECT	SHEET NO.	TOTAL SHEETS
03, 08	Sac, SBd	5, 15	23.3, R107.3	220	330

REGISTERED ELECTRICAL ENGINEER — 08-15-13 DATE

REGISTERED PROFESSIONAL ENGINEER — JASWINDER GILL — No. 18551 — Exp. 12-31-14 — ELEC — STATE OF CALIFORNIA

9-16-13
PLANS APPROVAL DATE

The State of California or its officers or agents shall not be responsible for the accuracy or completeness of electronic copies of this plan sheet.

CALIFORNIA STATE FIRE MARSHAL APPROVED
Approval of this plan does not authorize or approve any omission or deviation from applicable regulations. Final approval is subject to field inspection. One set of approved plans shall be available on the project site at all times.
Reviewed by: FRANCIS SOLICH
Approval date: 09-11-13

General Notes:

A. *Existing underground electrical conduits and conductors system as shown are diagrammatic and their location as shown is approximate only. Therefore, field verify exact location of existing underground facilities prior to the beginning of trenching and removal work. The cost for pot holing and for locating existing underground utilities shall be considered to be paid for in the building lump sump price and no additional cost will be paid.*

B. AB *any additional site conduits not shown on the plans.*

C. *Unless otherwise noted, remove all pull boxes on the Northbound Rest Area only and fill the holes to match surrounding surfaces.*

D. *For demolition of existing comfort stations, water treatment building and other structures on the Northbound Rest Area only, see Architectural plans, Water plans and Sewer plans.*

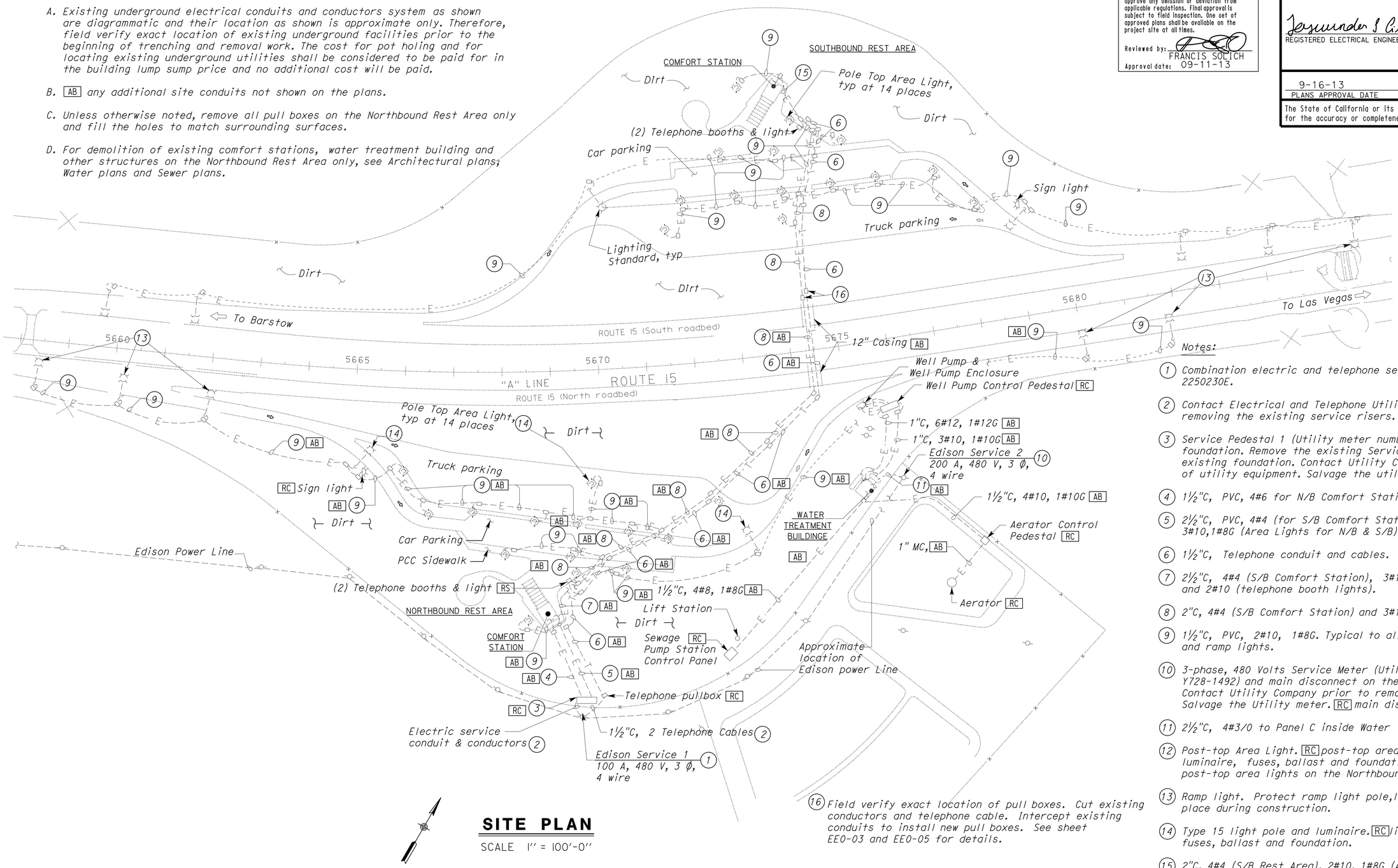

SITE PLAN

SCALE 1" = 100'-0"

THIS DRAWING ACCURATE FOR ELECTRICAL WORK ONLY

Notes:

1. *Combination electric and telephone service pole number 2250230E.*
2. *Contact Electrical and Telephone Utility Companies prior to removing the existing service risers.*
3. *Service Pedestal 1 (Utility meter number Y728-2115) and foundation. Remove the existing Service Pedestal 1 and existing foundation. Contact Utility Company prior to removal of utility equipment. Salvage the utility meter.*
4. *1½"C, PVC, 4#6 for N/B Comfort Station Service.*
5. *2½"C, PVC, 4#4 (for S/B Comfort Station service) and 3#10,1#8G (Area Lights for N/B & S/B).*
6. *1½"C, Telephone conduit and cables.*
7. *2½"C, 4#4 (S/B Comfort Station), 3#10, 1#8G (Area lights) and 2#10 (telephone booth lights).*
8. *2"C, 4#4 (S/B Comfort Station) and 3#10, 1#8G (Area lights).*
9. *1½"C, PVC, 2#10, 1#8G. Typical to all pole top area lights and ramp lights.*
10. *3-phase, 480 Volts Service Meter (Utility Meter No. is Y728-1492) and main disconnect on the Utility pole No. 2250031. Contact Utility Company prior to removal of utility equipment. Salvage the Utility meter.* RC *main disconnect.*
11. *2½"C, 4#3/0 to Panel C inside Water Treatment Building.*
12. *Post-top Area Light.* RC *post-top area light poles, luminaire, fuses, ballast and foundation. Typical all post-top area lights on the Northbound Rest Area.*
13. *Ramp light. Protect ramp light pole,luminaire and pull box in place during construction.*
14. *Type 15 light pole and luminaire.* RC *light pole, luminaire, fuses, ballast and foundation.*
15. *2"C, 4#4 (S/B Rest Area), 2#10, 1#8G (Area lights), 2#10 (Telephone booth).*
16. *Field verify exact location of pull boxes. Cut existing conductors and telephone cable. Intercept existing conduits to install new pull boxes. See sheet EE0-03 and EE0-05 for details.*

DESIGN SUPERVISOR	DESIGN	BY Jaswinder Gill	CHECKED J. S. Sandhu
DESIGN ENGINEER	DETAILS	BY Dall Zhou	CHECKED Jaswinder Gill
	QUANTITIES	BY Jaswinder Gill	CHECKED J. S. Sandhu

STATE OF CALIFORNIA
DEPARTMENT OF TRANSPORTATION

DIVISION OF ENGINEERING SERVICES
ELECTRICAL-MECHANICAL-WATER AND WASTEWATER DESIGN

BRIDGE NO. 540004R/L
POST MILE R107.3

C. V. KANE
SAFETY ROADSIDE REST AREA REHABILITATION
EXISTING SITE PLAN

SHEET **EE0-02**

DOES SD Imperial Rev. 9/02

ORIGINAL SCALE IN INCHES FOR REDUCED PLANS 0 1 2 3

UNIT 3596
PROJECT NUMBER & PHASE 08000002291

DISREGARD PRINTS BEARING EARLIER REVISION DATES → REVISION DATES (PRELIMINARY STAGE ONLY) 12/17/09 02/18/10 04/26/10 6/24/10 10/28/10 01/28/11 11/4/11 1/3/12 8/15/13 SHEET OF

18-SEP-2013 14:02

ee0_02.dgn

DIST.	COUNTY	ROUTE	POST MILES TOTAL PROJECT	SHEET NO.	TOTAL SHEETS
03, 08	Sac, SBd	5, 15	23.3, R107.3	221	330

Jaswinder S Gill
REGISTERED ELECTRICAL ENGINEER — 08-15-13 DATE

REGISTERED PROFESSIONAL ENGINEER — JASWINDER GILL — No. 18551 — Exp. 12-31-14 — ELEC — STATE OF CALIFORNIA

9-16-13
PLANS APPROVAL DATE

The State of California or its officers or agents shall not be responsible for the accuracy or completeness of electronic copies of this plan sheet.

CALIFORNIA STATE FIRE MARSHAL APPROVED

Approval of this plan does not authorize or approve any omission or deviation from applicable regulations. Final approval is subject to field inspection. One set of approved plans shall be available on the project site at all times.

Reviewed by: FRANCIS SOLICH
Approval date: 09-11-13

Notes:

1. (E) Combination electric and telephone service pole number 2250230E.
2. 1"C PVC, 2*8, 1*10G (Conductor numbers are L61 and N6) and 2*10, 1*10G (Conductor numbers are L110 and N10) to ELCS-N1 inside IFS1A.
3. 1"C, 2*8, 1*10G (Conductor numbers are L61 and N6). For continuation, see sheet EE6-1.1.
4. (2) 4"C, PVC, MT with pull rope. Install Utility Service riser per Utility Company requirements.
5. Install as per Utility Company requirements.
6. × 4"C, PVC, MT with pull rope to utility pad.
   × 4"C, PVC, MT with pull rope to Service and Distribution Switchboard.
7. × 3"C, 4*4/0, 1*2G.
   × 2"C, MT with pull rope.
8. × 3"C, 4*4/0, 1*2G.
   × 2"C, MT with pull rope.
9. 2" PVC coated RSC, MT with pull rope.
10. × 3"C, 4*4/0, 1*2G to the Southbound SRRA.
    × 3"C, MT with pull rope.
11. × 1"C, 4*8, 1*10G.
    × 1"C, 4*8, 1*10G.
    × (2) 2"C, MT with pull rope.
12. × 1" PVC coated RSC, 4*8, 1*10G (MSI Ckt. No. 6) to Sewage Pump Control Station.
    × 2" PVC coated RSC, MT with pull rope.
13. × 1"C, 4*8, 1*10G (MSI Ckt No. 5) to Aerator Control Station.
    × 2"C, MT with pull rope.
14. (E) 2"C, 4*4 (S/B Rest Area Power), 3*10, 1*8G (Area lights).
15. 2"C, MT with pull rope.
16. 3"C, MT with pull rope.
17. 1"C, MT, Conduit to ground well at the grounding system.
18. (2) 2"C, MT with pull rope.
19. Not used.
20. Interconnect all four pull boxes with 2" PVC coated RSC. Size pull boxes as required.
21. Service and Distribution Switchboard. For Schematic Diagram, see sheet EE0-10.
22. Grounding system.
23. Utility Pad. See sheet EE0-11 for additional details.
24. 3" PVC coated RSC, 4*4/0, 1*2G.
25. Sewage lift station, see Sanitary "SS" sheets for exact location.
26. 4"C, PVC, MT with pull rope to Edison Utility underground lockable splice box.
27. 2" PVC coated RSC, Sewage pump motor power cables and integral thermal cables.
28. For continuation, see sheet EE7-1.1.
29. No. 5 pull box.
30. 1"C, 3*8, 1*10G (Conductor numbers are (L131, L151 & L171) to S/B SRRA existing Area Lights.
31. 1"C, MT for future irrigation controller.
32. Install cable strain relief at both ends of the cable. Cable length shall be at least 15 feet greater than the actual footage needed.
33. 1"C, MC, 2*10, 1*10G (NLA7) power for public pay telephones.
34. Public pay telephones.
35. 3/4"C, MC, 2*10, 1*10G (NLA7). Stub up conduit 6 inches above finished floor and cap. Coordinate the exact location of stub up with the exact location of the public pay telephones.
36. Provide conduit coupling and stub-out conduits flush to floor. Plug conduits opening with recessed type conduit plug.
37. 2" PVC coated RSC, 5 fiber optic float switch cables.

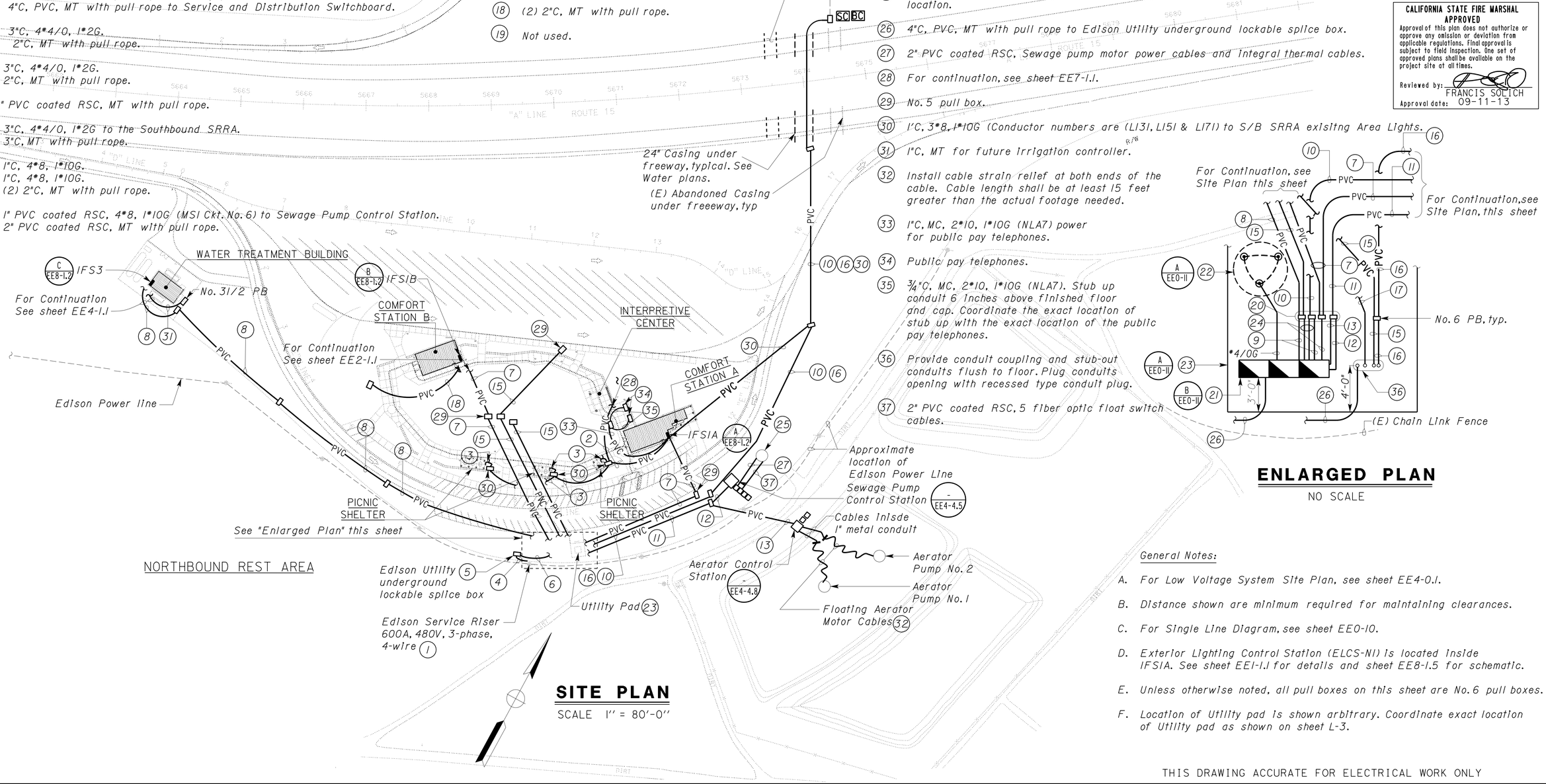

SITE PLAN

SCALE 1" = 80'-0"

ENLARGED PLAN

NO SCALE

General Notes:

A. For Low Voltage System Site Plan, see sheet EE4-0.1.

B. Distance shown are minimum required for maintaining clearances.

C. For Single Line Diagram, see sheet EE0-10.

D. Exterior Lighting Control Station (ELCS-N1) is located inside IFS1A. See sheet EE1-1.1 for details and sheet EE8-1.5 for schematic.

E. Unless otherwise noted, all pull boxes on this sheet are No. 6 pull boxes.

F. Location of Utility pad is shown arbitrary. Coordinate exact location of Utility pad as shown on sheet L-3.

THIS DRAWING ACCURATE FOR ELECTRICAL WORK ONLY

	BY	CHECKED
DESIGN	Jaswinder Gill	J. S. Sandhu
DETAILS	Dali Zhou	Jaswinder Gill
QUANTITIES	Jaswinder Gill	J. S. Sandhu

STATE OF CALIFORNIA
DEPARTMENT OF TRANSPORTATION

DIVISION OF ENGINEERING SERVICES
ELECTRICAL-MECHANICAL-WATER AND WASTEWATER DESIGN

BRIDGE NO. 540004R/L
POST MILE R107.3

C. V. KANE
SAFETY ROADSIDE REST AREA REHABILITATION
NORTHBOUND MODIFIED POWER PLAN

SHEET EE0-03

DOES SD Imperial Rev. 9/02

ORIGINAL SCALE IN INCHES FOR REDUCED PLANS 0 1 2 3

UNIT 3596
PROJECT NUMBER & PHASE 08000002291

DISREGARD PRINTS BEARING EARLIER REVISION DATES

REVISION DATES (PRELIMINARY STAGE ONLY) 12/15/09 02/18/10 04/05/10 6/14/10 10/25/10 01/28/11 11/14/11 1/3/12 8/29/12 8/15/13

SHEET OF

18-SEP-2013 14:03

ee0_03.dgn

DIST.	COUNTY	ROUTE	POST MILES TOTAL PROJECT	SHEET NO.	TOTAL SHEETS
03, 08	Sac, SBd	5, 15	23.3, R107.3	222	330

Jaswinder S Gill 08-15-13
REGISTERED ELECTRICAL ENGINEER DATE

REGISTERED PROFESSIONAL ENGINEER JASWINDER GILL No. 18551 Exp. 12-31-14 ELEC STATE OF CALIFORNIA

9-16-13
PLANS APPROVAL DATE

The State of California or its officers or agents shall not be responsible for the accuracy or completeness of electronic copies of this plan sheet.

Notes:

1. *(E) Combination electric and telephone service pole number 2250230E.*
2. *4"C with pull rope. Install telephone riser as per Utility Company requirements.*
3. *2"C, 25-pair telephone cable.*
4. *2"C, (2) 12-pair telephone cables.*
5. *1"C, 12-pair telephone cable.*
6. *3/4"C, MC with pull rope to public pay telephone.*
7. *Terminate all telephone cables on Type 110 punchdown blocks. Separate load side punchdown blocks from Utility side punchdown blocks as directed by the engineer.*
8. *1"C, MT with pull rope.*
9. *(E) 1 1/2" C, Telephone conduit and cables.*

General Notes:

A. *For Telephone plans inside the Comfort Station A, see sheet EE1-1.4.*

B. *For Telephone plans inside the Water Treatment Building, see sheet EE4-1.1.*

C. *Unless otherwise noted, all pull boxes on this sheet are No. 6 pull box.*

D. *For Telephone plans inside the Comfort Station B, see sheet EE2-1.1.*

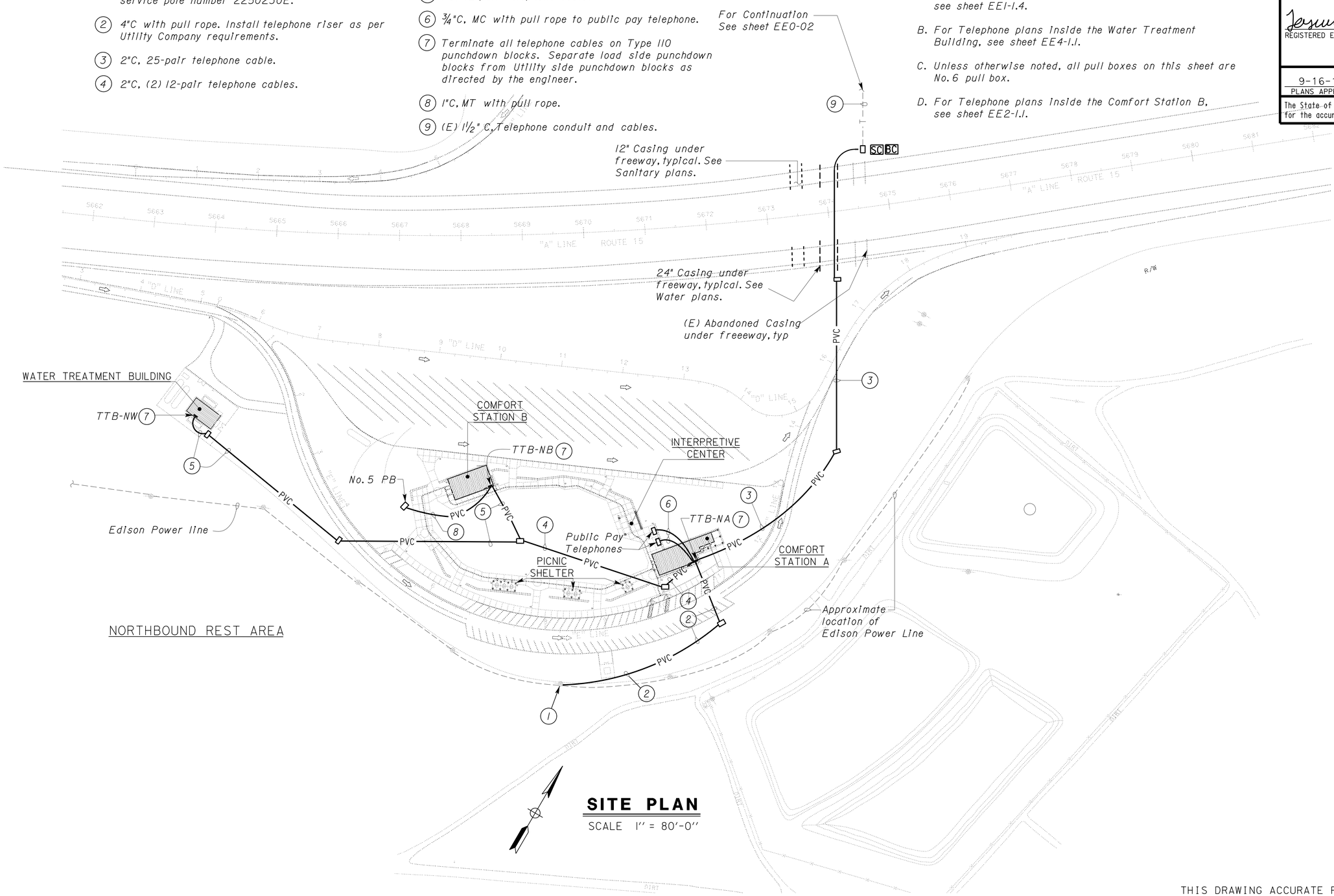

SITE PLAN
SCALE 1" = 80'-0"

CALIFORNIA STATE FIRE MARSHAL APPROVED
Approval of this plan does not authorize or approve any omission or deviation from applicable regulations. Final approval is subject to field inspection. One set of approved plans shall be available on the project site at all times.
Reviewed by: FRANCIS SOLICH
Approval date: 09-11-13

THIS DRAWING ACCURATE FOR ELECTRICAL WORK ONLY

	BY	CHECKED
DESIGN	Jaswinder Gill	J. S. Sandhu
DETAILS	Dali Zhou	Jaswinder Gill
QUANTITIES	Jaswinder Gill	J. S. Sandhu

STATE OF CALIFORNIA DEPARTMENT OF TRANSPORTATION

DIVISION OF ENGINEERING SERVICES
ELECTRICAL-MECHANICAL-WATER AND WASTEWATER DESIGN

BRIDGE NO. 540004R/L
POST MILE R107.3

C. V. KANE SAFETY ROADSIDE REST AREA REHABILITATION
NORTHBOUND MODIFIED TELEPHONE PLAN

SHEET **EE0-05**

DOES SD Imperial Rev. 9/02

ORIGINAL SCALE IN INCHES FOR REDUCED PLANS 0 1 2 3

UNIT 3596
PROJECT NUMBER & PHASE 08000002291

DISREGARD PRINTS BEARING EARLIER REVISION DATES →
REVISION DATES (PRELIMINARY STAGE ONLY) 12/15/09 02/18/10 04/05/10 6/14/10 10/25/10 03/28/11 11/4/11 8/15/13
SHEET OF

18-SEP-2013 14:03
ee0_05.dgn

DIST.	COUNTY	ROUTE	POST MILES TOTAL PROJECT	SHEET NO.	TOTAL SHEETS
03, 08	Sac, SBd	5, 15	23.3, R107.3	223	330

Jaswinder S Gill
REGISTERED ELECTRICAL ENGINEER — 08-15-13 DATE

REGISTERED PROFESSIONAL ENGINEER — JASWINDER GILL — No. 18551 — Exp. 12-31-14 — ELEC — STATE OF CALIFORNIA

9-16-13
PLANS APPROVAL DATE

The State of California or its officers or agents shall not be responsible for the accuracy or completeness of electronic copies of this plan sheet.

General Notes:

A. *Unless otherwise noted, all pull boxes on this sheet shall be No. 5 pull box.*

B. *For building mounted lights, see building plans.*

C. *See sheet EE0-02 for exact location of existing ramp lights.*

CALIFORNIA STATE FIRE MARSHAL APPROVED
Approval of this plan does not authorize or approve any omission or deviation from applicable regulations. Final approval is subject to field inspection. One set of approved plans shall be available on the project site at all times.
Reviewed by: FRANCIS SOLICH
Approval date: 09-11-13

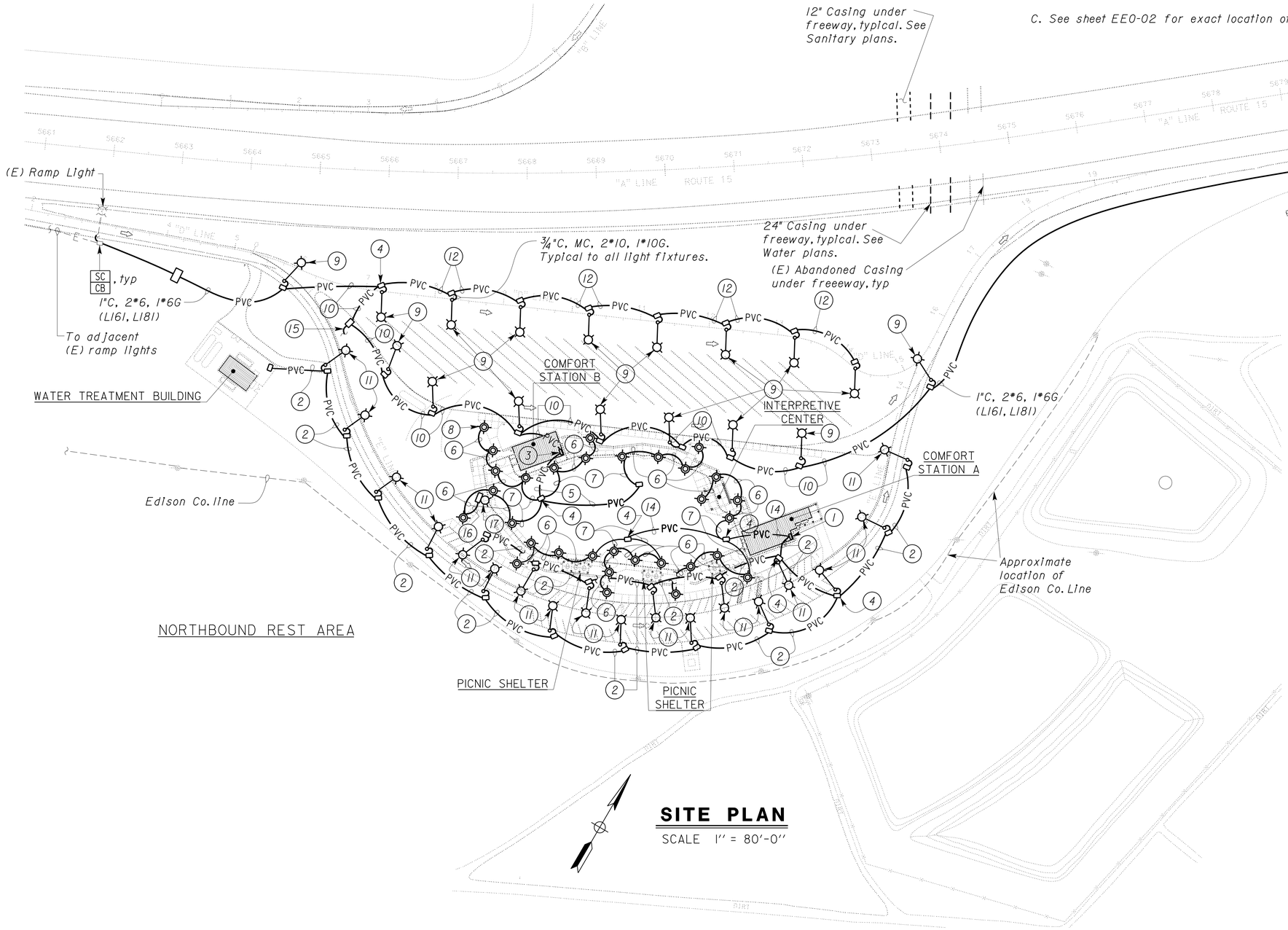

SITE PLAN
SCALE 1" = 80'-0"

Notes:

1. *Exterior Lighting Control Station-N1 inside IFS1A. See sheet EE1-1.1 for location and sheet EE8-1.5 for Schematic Diagram.*
2. *1"C, 2*6, 1*6G. Conductor number L41 and N4 (car parking lights).*
3. *Exterior Lighting Control Station-N2 inside IFS1B. See sheet EE2-1.1 for location and sheet EE8-1.5 for Schematic Diagram.*
4. *No. 6 pull box.*
5. *1"C, 2*8, 1*10G. Conductor numbers are L101, N10 (post-top lights).*
6. *3/4"C, PVC, 2*10, 1*10G to adjacent post-top light fixture.*
7. *3/4"C, PVC, 2*10, 1*10G to the post-top light fixtures. Install 5A fuse as specified for this string of lights inside the pull box.*
8. *MH1-1x100, post-top light fixture. Typical 31 places. For fixture mounting details, see sheet EE8-1.7.*
9. *LED3-1x140 on Type 15 light standard with 15'-0" long pole arm. For details, refer to Standard Plan sheet ES-6A, typical.*
10. *2"C, 4*6, 1*6G. Conductor number L141, N4 (truck parking lights) and L161, L181 (On/Off ramp lights).*
11. *LED3-1x140 on Type 15 light standard with 8'-0" long pole arm. For details, refer to Standard Plan sheet ES-6A, typical.*
12. *1"C, 2*6, 1*6G. Conductor number L141 and N4 (truck parking lights).*
13. *Not Used.*
14. *1"C, 2*8, 1*10G. Conductor numbers are L81 and N8 (post-top lights).*
15. *1"C, 2*8, 1*10G. Conductor numbers L141, N4. Coordinate the location of sign light to light the Entry monument sign. See sheet LD-4 for exact location of entry monument sign.*
16. *3/4"C, PVC, 2*10, 1*10G to in-grade flag pole lights.*
17. *(2) MH4-1X150, in-grade flagpole lights. For details, see 5 / EE8-1.7.*

THIS DRAWING ACCURATE FOR ELECTRICAL WORK ONLY

	BY	CHECKED
DESIGN	Jaswinder Gill	J. S. Sandhu
DETAILS	Dali Zhou	Jaswinder Gill
QUANTITIES	Jaswinder Gill	J. S. Sandhu

STATE OF CALIFORNIA
DEPARTMENT OF TRANSPORTATION

DIVISION OF ENGINEERING SERVICES
ELECTRICAL-MECHANICAL-WATER AND WASTEWATER DESIGN

BRIDGE NO. 540004R/L
POST MILE R107.3

C. V. KANE
SAFETY ROADSIDE REST AREA REHABILITATION
NORTHBOUND AREA LIGHTING PLAN

SHEET **EE0-07**

DOES SD Imperial Rev. 9/02

ORIGINAL SCALE IN INCHES FOR REDUCED PLANS 0 1 2 3

UNIT 3596
PROJECT NUMBER & PHASE 08000002291

DISREGARD PRINTS BEARING EARLIER REVISION DATES
REVISION DATES (PRELIMINARY STAGE ONLY): 12/15/09 02/18/10 04/05/10 6/14/10 10/22/10 07/22/11 11/14/11 08/15/13
SHEET OF

18-SEP-2013 14:03
ee0_07.dgn

DIST.	COUNTY	ROUTE	POST MILES TOTAL PROJECT	SHEET NO.	TOTAL SHEETS
03, 08	Sac, SBd	5, 15	23.3, R107.3	224	330

REGISTERED ELECTRICAL ENGINEER — 08-15-13 DATE

REGISTERED PROFESSIONAL ENGINEER — JASWINDER GILL — No. 18551 — Exp. 12-31-14 — ELEC — STATE OF CALIFORNIA

9-16-13
PLANS APPROVAL DATE

The State of California or its officers or agents shall not be responsible for the accuracy or completeness of electronic copies of this plan sheet.

CALIFORNIA STATE FIRE MARSHAL APPROVED

Approval of this plan does not authorize or approve any omission or deviation from applicable regulations. Final approval is subject to field inspection. One set of approved plans shall be available on the project site at all times.

Reviewed by: FRANCIS SOLICH
Approval date: 09-11-13

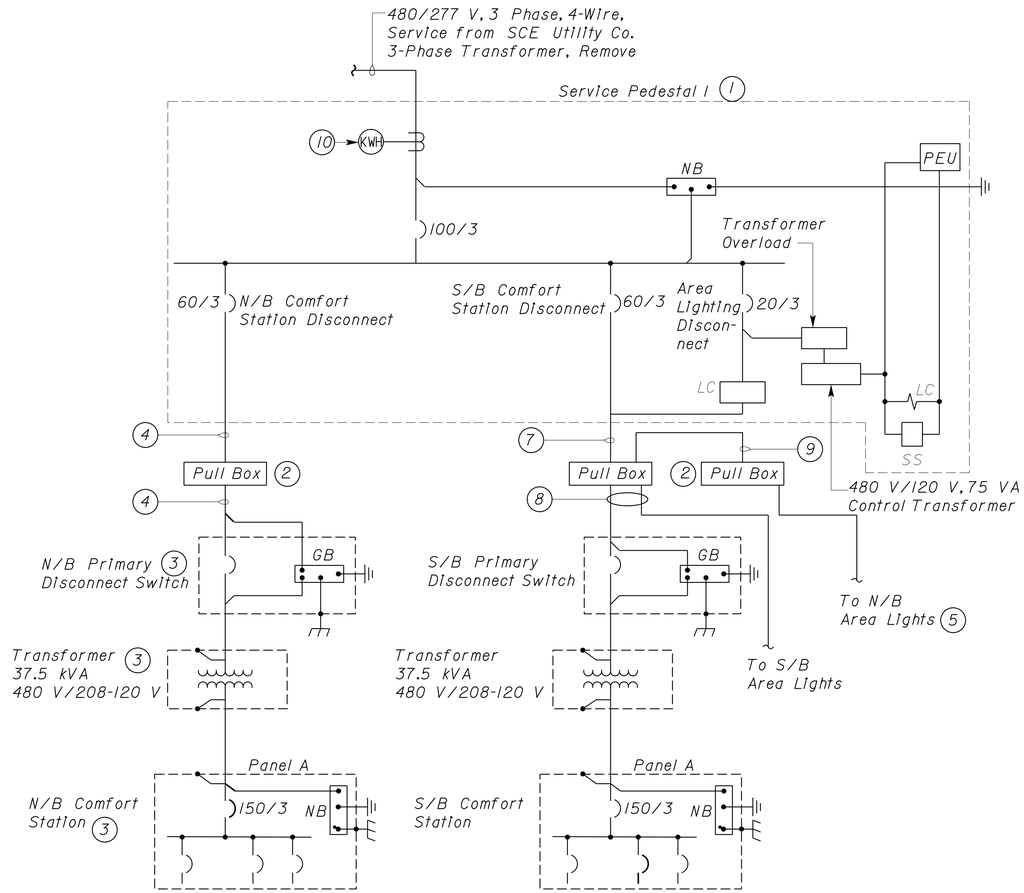

EXISTING

Notes:

(1) For removal of existing Service Pedestal I and equipments, see sheet EE0-02.

(2) Remove existing pull boxes. For location of pull boxes see sheet EE0-02.

(3) Removal of Panels, Transformers and Primary Disconnect Switches inside the rest areas are included under demolition plan. See Architectural plans.

(4) (E) 1½" PVC, 4*6 for Northbound Service. For removal see sheet EE0-02.

(5) For continuation and removal plan, see sheet EE0-02.

(6) Not used.

(7) (E) 2½" PVC, 4*4, 3*10, 1*10G. See sheet EE0-02 for details.

(8) 2½"C, 4*4 (S/B SRRA Power), 3*8, 1*10G (S/B Area Lights). See sheet EE0-02 for intercepting existing conduits and conductors. See sheet EE0-03 for splicing new to existing conductors. See sheet EE0-10 for modified single line diagram.

(9) (E) 1"C, 3*10, 1*10G. For removal see sheet EE0-02.

(10) Refer to Note 3 on sheet EE0-02.

THIS DRAWING ACCURATE FOR ELECTRICAL WORK ONLY

	BY	CHECKED
DESIGN	Jaswinder Gill	J. S. Sandhu
DETAILS	Dali Zhou	Jaswinder Gill
QUANTITIES	Jaswinder Gill	J. S. Sandhu

STATE OF CALIFORNIA
DEPARTMENT OF TRANSPORTATION

DIVISION OF ENGINEERING SERVICES
ELECTRICAL-MECHANICAL-WATER AND WASTEWATER DESIGN

BRIDGE NO. 540004R/L
POST MILE R107.3

C. V. KANE
SAFETY ROADSIDE REST AREA REHABILITATION
EXISTING SINGLE LINE DIAGRAM

SHEET EE0-09

DOES SD Imperial Rev. 9/02

ORIGINAL SCALE IN INCHES FOR REDUCED PLANS 0 1 2 3

UNIT 3596
PROJECT NUMBER & PHASE 08000002291

DISREGARD PRINTS BEARING EARLIER REVISION DATES → REVISION DATES (PRELIMINARY STAGE ONLY) 12/17/09 02/18/10 04/05/10 6/24/10 10/28/10 01/26/11 11/4/11 8/15/13 SHEET OF

18-SEP-2013 14:03

ee0_09.dgn

DIST.	COUNTY	ROUTE	POST MILES TOTAL PROJECT	SHEET NO.	TOTAL SHEETS
03, 08	Sac, SBd	5, 15	23.3, R107.3	225	330

Jaswinder S Gill 08-15-13
REGISTERED ELECTRICAL ENGINEER DATE

REGISTERED PROFESSIONAL ENGINEER JASWINDER GILL No. 18551 Exp. 12-31-14 ELEC STATE OF CALIFORNIA

9-16-13
PLANS APPROVAL DATE

The State of California or its officers or agents shall not be responsible for the accuracy or completeness of electronic copies of this plan sheet.

CALIFORNIA STATE FIRE MARSHAL APPROVED
Approval of this plan does not authorize or approve any omission or deviation from applicable regulations. Final approval is subject to field inspection. One set of approved plans shall be available on the project site at all times.
Reviewed by: FRANCIS SOLICH
Approval date: 09-11-13

General Note:

A. *All panelboards shall have minimum 10 K SCCR unless otherwise noted on the Panel Schedules.*

B. *Pull boxes are shown here for clarity only. All of the pull boxes are not shown. See site plans for pull boxes.*

C. *Spare conduits are not shown.*

Notes:

1. 3" PVC coated RSC, 4*4/0, 1*2G.
2. 3" C, 4*4/0, 1*2G.
3. 1" PVC coated RSC, 4*8, 1*10G.
4. 1"C, 4*8, 1*10G.
5. For details, see sheet EE0-11.
6. Bidirectional utility meter.
7. 1"C, 3*8, 1*10G (Conductor numbers are L131, L151 & L171). See ELCS-N1 schematic on sheet EE8-1.5 for details.
8. 2½"C, 4*4 (S/B SRRA Power), 3*8, 1*10G (S/B Area Lights). See sheet EE0-02 for intercepting existing conduits and conductors. See sheet EE0-03 for splicing new to existing conductors.

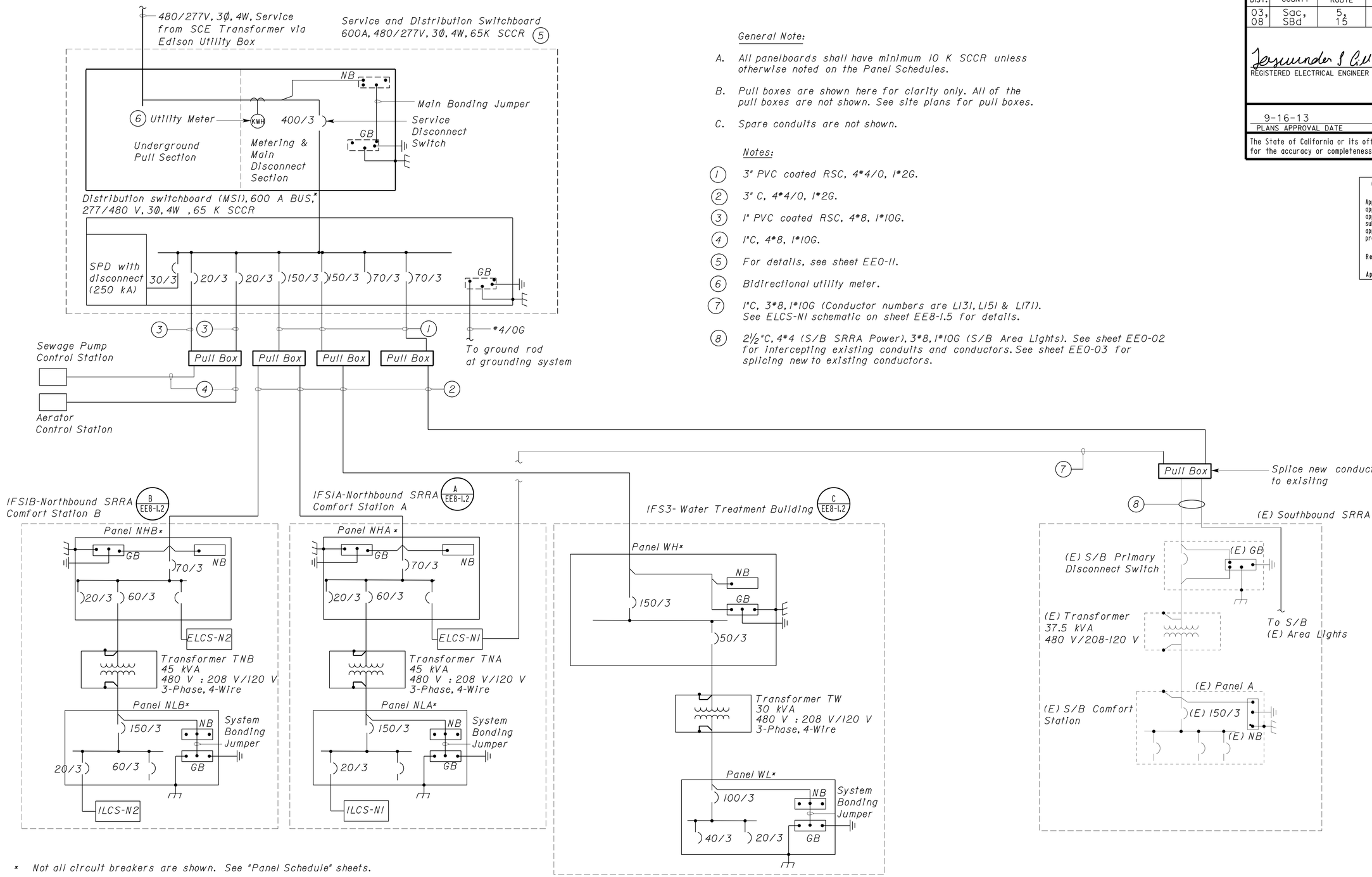

* Not all circuit breakers are shown. See "Panel Schedule" sheets.

THIS DRAWING ACCURATE FOR ELECTRICAL WORK ONLY

	BY	CHECKED
DESIGN	Jaswinder Gill	J. S. Sandhu
DETAILS	Dali Zhou	Jaswinder Gill
QUANTITIES	Jaswinder Gill	J. S. Sandhu

STATE OF CALIFORNIA DEPARTMENT OF TRANSPORTATION

DIVISION OF ENGINEERING SERVICES ELECTRICAL-MECHANICAL-WATER AND WASTEWATER DESIGN

BRIDGE NO. 540004R/L
POST MILE R107.3

C. V. KANE SAFETY ROADSIDE REST AREA REHABILITATION

MODIFIED SINGLE LINE DIAGRAM

SHEET **EE0-10**

DOES SD Imperial Rev. 9/02

ORIGINAL SCALE IN INCHES FOR REDUCED PLANS 0 1 2 3

UNIT 3596
PROJECT NUMBER & PHASE 08000002291

DISREGARD PRINTS BEARING EARLIER REVISION DATES → REVISION DATES (PRELIMINARY STAGE ONLY) 01/07/09 02/26/10 04/26/10 6/04/10 10/28/10 01/28/11 11/4/11 8/15/13 SHEET OF

18-SEP-2013 14:03
ee0_10.dgn

DIST.	COUNTY	ROUTE	POST MILES TOTAL PROJECT	SHEET NO.	TOTAL SHEETS
03, 08	Sac, SBd	5, 15	23.3, R107.3	226	330

REGISTERED ELECTRICAL ENGINEER — 08-15-13 DATE

REGISTERED PROFESSIONAL ENGINEER — JASWINDER GILL — No. 18551 — Exp. 12-31-14 — ELEC — STATE OF CALIFORNIA

9-16-13
PLANS APPROVAL DATE

The State of California or its officers or agents shall not be responsible for the accuracy or completeness of electronic copies of this plan sheet.

CALIFORNIA STATE FIRE MARSHAL APPROVED

Approval of this plan does not authorize or approve any omission or deviation from applicable regulations. Final approval is subject to field inspection. One set of approved plans shall be available on the project site at all times.

Reviewed by: FRANCIS SOLICH
Approval date: 09-11-13

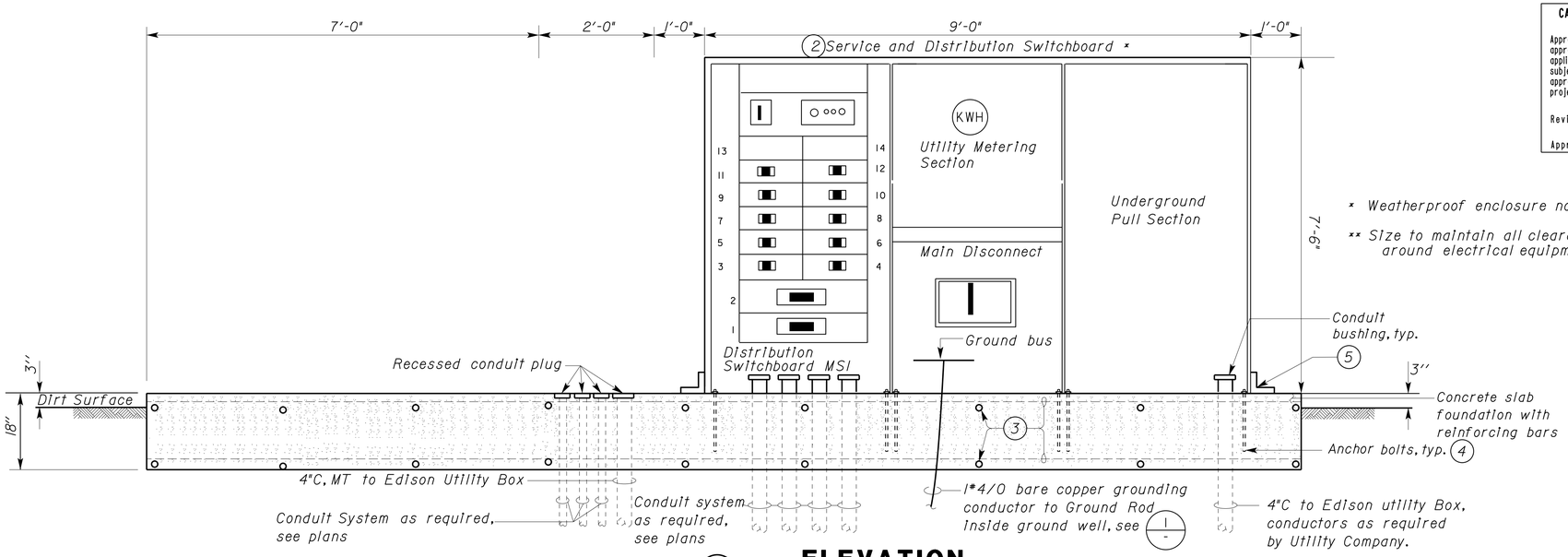

* Weatherproof enclosure not shown.

** Size to maintain all clearances around electrical equipments.

B ELEVATION
NO SCALE

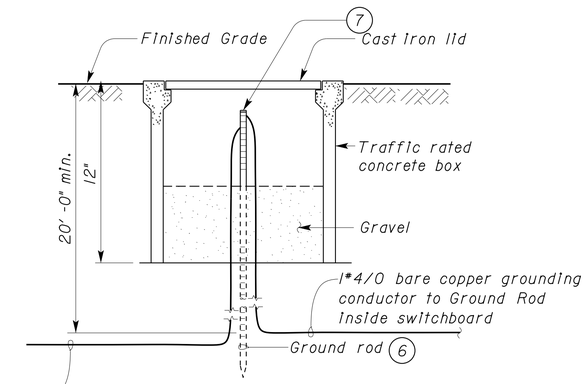

1 GROUND WELL DETAIL
NO SCALE

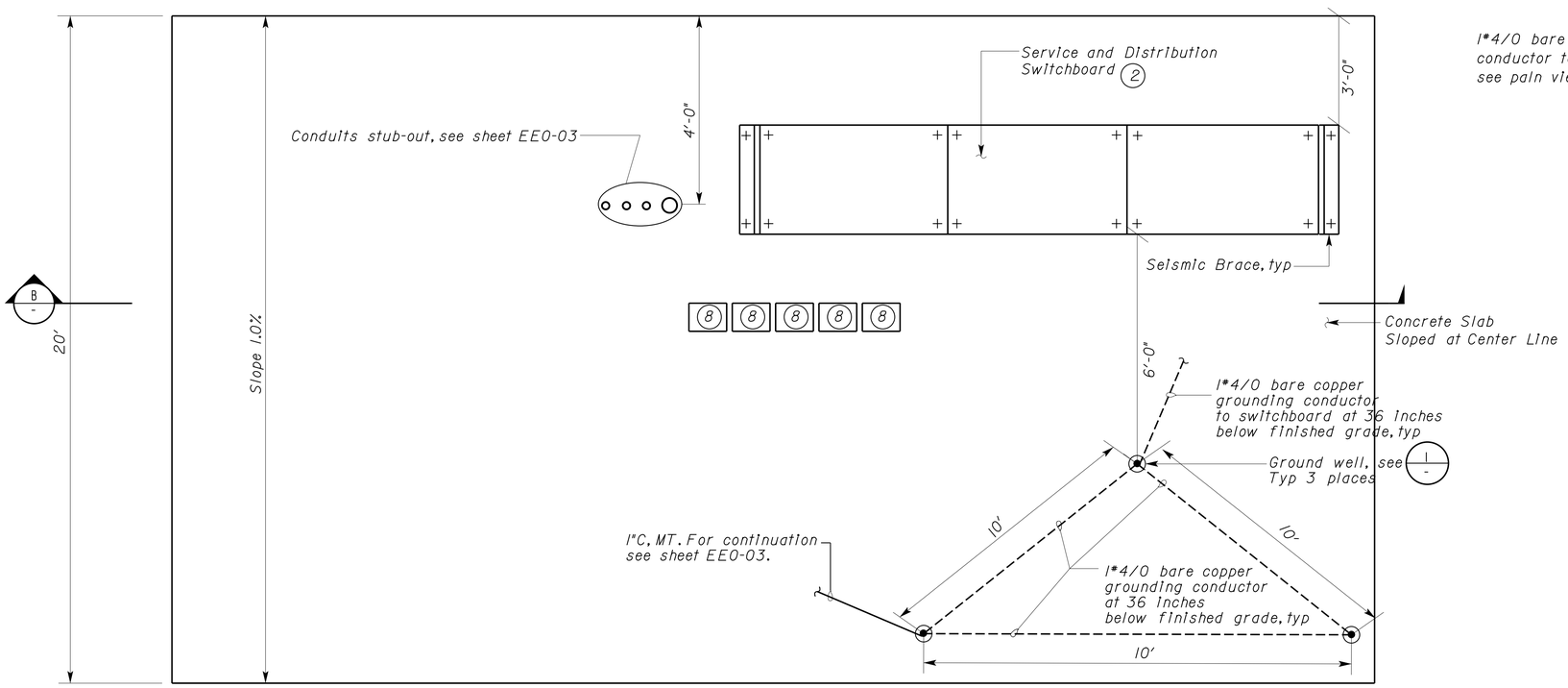

A PLAN UTILITY PAD
NO SCALE

General Note:

A. Dimensions shown for electrical equipments sizes are nominal and are for reference only. Dimensions shown for electrical equipment clearences and utility pad size are fixed and shall not be modified.

Notes:

(1) Not used.

(2) Service and Distribution Switchboard. For location see sheet EE0-03 and for schematic diagram, see sheet EE0-10.

(3) *4 rebar @ 18", each way, top and bottom.

(4) Size, type and number of anchor bolt as required by the service pedestal and switchboard manufacturer's to meet or exceed the seismic zone 4 requirements.

(5) Provide end seismic bracing per service pedestal and switchboard manufacturer's recommendations to meet seismic Zone 4 requirements.

(6) Drive ground rod into the ground so that top of the ground rod is 3 inches below the cast iron lid.

(7) Provide acorn type connector for terminating grounding electrode conductor onto the ground rod.

(8) Size pull boxes as required. See site plan views for details. Location of pull boxes is shown arbitrary. Ccoordinate exact location with the engineer in the field.

THIS DRAWING ACCURATE FOR ELECTRICAL WORK ONLY

	BY	CHECKED
DESIGN	Jaswinder Gill	J. S. Sandhu
DETAILS	Dali Zhou	Jaswinder Gill
QUANTITIES	Jaswinder Gill	J. S. Sandhu

STATE OF CALIFORNIA
DEPARTMENT OF TRANSPORTATION

DIVISION OF ENGINEERING SERVICES
ELECTRICAL-MECHANICAL-WATER AND WASTEWATER DESIGN

BRIDGE NO. 540004R/L
POST MILE R107.3

C. V. KANE
SAFETY ROADSIDE REST AREA REHABILITATION
SERVICE EQUIPMENT DETAILS

SHEET EE0-11

DOES SD Imperial Rev. 9/02

ORIGINAL SCALE IN INCHES FOR REDUCED PLANS 0 1 2 3

UNIT 3596
PROJECT NUMBER & PHASE 08000002291

DISREGARD PRINTS BEARING EARLIER REVISION DATES → REVISION DATES (PRELIMINARY STAGE ONLY) 12/17/09 02/18/10 04/05/10 5/14/10 10/25/10 01/25/11 11/4/11 8/15/13 SHEET OF

18-SEP-2013 14:03
ee0_11.dgn

DIST.	COUNTY	ROUTE	POST MILES TOTAL PROJECT	SHEET NO.	TOTAL SHEETS
03, 08	Sac, SBd	5, 15	23.3, R107.3	227	330

Jaswinder S. Gill 08-15-13
REGISTERED ELECTRICAL ENGINEER DATE

REGISTERED PROFESSIONAL ENGINEER JASWINDER GILL No. 18551 Exp. 12-31-14 ELEC STATE OF CALIFORNIA

9-16-13
PLANS APPROVAL DATE

The State of California or its officers or agents shall not be responsible for the accuracy or completeness of electronic copies of this plan sheet.

CALIFORNIA STATE FIRE MARSHAL
APPROVED
Approval of this plan does not authorize or approve any omission or deviation from applicable regulations. Final approval is subject to field inspection. One set of approved plans shall be available on the project site at all times.
Reviewed by: FRANCIS SOLICH
Approval date: 09-11-13

CALIFORNIA ENERGY COMMISSION MANDATORY MEASURES:

BUILDING LIGHTING SHUT-OFF

1. Occupancy sensor for Break Room.

2. Timer switches for Utility room, Storage and Electrical Room.

3. Restroom lights are exempt for automatic shut-off because of 24 hour facility.

INDOOR MULTI-LEVEL LIGHTING CONTROL

1. Bilevel occupant sensor wall switches for Break Room greater than 100 square feet.

2. Timer switches for all other locations.

DAYLIT AREA CONTROL

1. Photoelectric sensor, and bypass pushbutton for Restrooms with primary daylit area.

BUILDING EXTERIOR LIGHTING AND AREA LIGHTING

1. Photoelectric unit and astronomical time clock.

2. All exterior luminaries shall have cut-off type light distribution.

GENERAL NOTE:

Form LTG-1C, page 2 of 4 (Conditional Spaces) and page 2 of 4 (Un-conditional Spaces) are shown on sheet EE1-0.2.
Form LTG-1C, page 3 of 4 and page 4 of 4 are shown on sheet. EE1-0.3.
Other checked forms are available upon request.

CERTIFICATE OF COMPLIANCE (Page 1 of 4) LTG-1C

Project Name: C. V. KANE SAFETY ROADSIDE REST AREA REHABILITATION
Date: 8/15/13

Project Address: 15 MILES EAST OF NEWBERRY SPRINGS, CA 92365
Climate Zone: 14
Building CFA: 7,342
Unconditioned Floor Area: 4,679 SF

General Information

Building Type:	☑ Nonresidential	☐ High-Rise Residential	☐ Hotel/Motel
☐ Schools	☐ Relocatable Public Schools	☑ Conditioned Spaces	☑ Unconditioned Spaces
Phase of Construction:	☑ New Construction	☐ Addition	☐ Alteration
Method of Compliance:	☐ Complete Building	☑ Area Category	☑ Tailored

Documentation Author's Declaration Statement
- I Certify that this Certificate of Compliance documentation is accurate and complete.

Name: JASWINDER GILL
Signature: Jaswinder S. Gill
Company: CA DEPARTMENT OF TRANSPORTATION
Date: 8/15/13
Address: 1801 30TH STREET, MS:9-3/11H
If applicable: CEA # CEPE #
City/State/Zip: SACRAMENTO, CA-95816
Phone: (916) 227-9492

Principal Lighting Designer's Declaration Statement
- I am eligible under Division 3 of the California Business and Professions Code to accept responsibility for the lighting design.
- This Certificate of Compliance identifies the lighting features and performance specification required for compliance with Title 24, Pages 1 and 6 of the California Code of Regulations.
- The design features represented on this Certificate of Compliance are consistent with the information provided to document this design on the other applicable compliance forms, worksheets, calculations, plans and specifications submitted to the enforcement agency for approval with this building permit application.

Name: JASWINDER GILL
Signature: Jaswinder S. Gill
Company: CA DEPARTMENT OF TRANSPORTATION
Phone: (916) 227-9492
Address: 1801 30TH STREET, MS:9-3/11H
License # E 18551
City/State/Zip: SACRAMENTO, CA-95816
Date: EXP 12-31-14

Lighting Mandatory Measures
Indicate location on building plans of Mandatory Measures Note Block: EE1-0.1

LIGHTING COMPLIANCE FORMS & WORKSHEETS (Check box if worksheet is included)

For detailed instructions on the use of this and all Energy Effeciency Standards compliance forms, please refer to the Nonresidential Manual published by the California Energy Commission.

☑	LTG-1C Pages 1 through 4	Certificate of Compliance. All pages required on plans for all submittals.
☑	LTG-2C	Lighting Controls Credit Worksheet
☑	LTG-3C	Indoor Lighting Power Allowance
☑	LTG-4C Pages 1 through 4	Tailored Method Worksheet
☐	LTG-5C Pages 1 and 2	Line Voltage Track Lighting Worksheet

2008 Nonresidential Compliance Forms ***July 2010***

	BY	CHECKED
DESIGN	Jaswinder Gill	J. S. Sandhu
DETAILS	Ed D.Tapalla 4/10	Jaswinder Gill
QUANTITIES	Jaswinder Gill	J. S. Sandhu

STATE OF CALIFORNIA
DEPARTMENT OF TRANSPORTATION

DIVISION OF ENGINEERING SERVICES
ELECTRICAL-MECHANICAL-WATER AND WASTEWATER DESIGN

BRIDGE NO. 540004R/L
POST MILE R107.3

C. V. KANE
SAFETY ROADSIDE REST AREA REHABILITATION
INDOOR LIGHTING COMPLIANCE FORMS 1

SHEET EE1-0.1

DOES SD Imperial Rev. 9/02

ORIGINAL SCALE IN INCHES FOR REDUCED PLANS 0 1 2 3

UNIT 3596
PROJECT NUMBER & PHASE 08000002291

DISREGARD PRINTS BEARING EARLIER REVISION DATES → 4/15/10 5/14/10 10/25/10 01/28/11 8/15/13

REVISION DATES (PRELIMINARY STAGE ONLY) SHEET OF

18-SEP-2013 14:03
ee1_0_01.dgn

CERTIFICATE OF COMPLIANCE (Page 2 of 4) LTG-1C

INDOOR LIGHTING SCHEDULE and FIELD INSPECTION ENERGY CHECKLIST

Project Name: C.V. KANE SAFETY ROADSIDE REST AREA REHABILITATION	Date: 08-15-13
Installation Certificate, LTG-1-INST (Retain a copy and verify form is complted and signed.)	Field Inspector ☐
Certificate of Acceptance, LTG-2A and LTG-3A (Retain a copy and verify form is completed and signed.)	Field Inspector ☐

A separate Lighting Schedule Must Be Filled Out for Conditioned and Unconditioned Spaces Installed Lighting Power listed on this Lighting Schedule is only for: ☐ CONDITIONED SPACE ☑ UNCONDITIONED SPACE

☑ The actual indoor lighting power listed below includes all installed permanent and portable lighting system in accordance with S 146 (a)

☑ Only for offices: Up to the first 0.2 watts per square foot of portable lighting shall not be rquired to be included in the calculation of actual indoor lighting power density in accordance with Exception to S 146 (a). All portable lighting in excess of 0.2 watts per square foot is totaled below.

A	B	C	D	E		F	G	H	
	Luminaire Schedule (Type, Lamps, Ballasts)		Installed Watts						
				How wattage was determined				Field Inspector[2]	
Name or Item Tag	Complete Luminaire Description (i.e, lamp flourescent troffer, F32T8, one dimmable electronic ballast)		Watts per Luminaire1	CEC Default from NA8	According to S 130 (d or e)	Number of Luminaires	Installed Watts (D x F)	Pass	Fail
LED1	4 FEET CORNER MOUNTED, VANDAL LED FIXTURE		68	☐	☑	54	3672	☐	☐
LED2	1X4 FEET SURFACE MOUNTED, LED FIXTURE		44	☐	☑	17	748	☐	☐
				☐	☐			☐	☐
				☐	☐			☐	☐
				☐	☐			☐	☐
				☐	☐			☐	☐
				☐	☐			☐	☐
				☐	☐			☐	☐
				☐	☐			☐	☐
				☐	☐			☐	☐
				☐	☐			☐	☐
				☐	☐			☐	☐
				☐	☐			☐	☐
				☐	☐			☐	☐
				☐	☐			☐	☐
				☐	☐			☐	☐
				☐	☐			☐	☐
					INSTALLED WATTS PAGE TOTAL:		4420		
	Building total number of pages				Installed Watts Building Total (Sum of all pages)		4420		
					Enter into LTG-1C Page 4 of 4				

1. Wattage shall be determined according to Section 130 (d and e). Wattage shall be rating of light fixture, not rating of bulb.
2. If Fail then describe on Page 2 of the Inspection Checklist Form and take appropriate action to correct. Verify building plans if necessary.

2008 Nonresidential Compliance Forms *July 2010*

CERTIFICATE OF COMPLIANCE (Page 2 of 4) LTG-1C

INDOOR LIGHTING SCHEDULE and FIELD INSPECTION ENERGY CHECKLIST

Project Name: C.V. KANE SAFETY ROADSIDE REST AREA REHABILITATION	Date: 08-15-13
Installation Certificate, LTG-1-INST (Retain a copy and verify form is complted and signed.)	Field Inspector ☐
Certificate of Acceptance, LTG-2A and LTG-3A (Retain a copy and verify form is completed and signed.)	Field Inspector ☐

A separate Lighting Schedule Must Be Filled Out for Conditioned and Unconditioned Spaces Installed Lighting Power listed on this Lighting Schedule is only for: ☑ CONDITIONED SPACE ☐ UNCONDITIONED SPACE

☑ The actual indoor lighting power listed below includes all installed permanent and portable lighting system in accordance with S 146 (a)

☑ Only for offices: Up to the first 0.2 watts per square foot of portable lighting shall not be rquired to be included in the calculation of actual indoor lighting power density in accordance with Exception to S 146 (a). All portable lighting in excess of 0.2 watts per square foot is totaled below.

A	B	C	D	E		F	G	H	
	Luminaire Schedule (Type, Lamps, Ballasts)		Installed Watts						
				How wattage was determined				Field Inspector[2]	
Name or Item Tag	Complete Luminaire Description (i.e, lamp flourescent troffer, F32T8, one dimmable electronic ballast)		Watts per Luminaire1	CEC Default from NA8	According to S 130 (d or e)	Number of Luminaires	Installed Watts (D x F)	Pass	Fail
LED2	1X4 FEET SURFACE MOUNTED, LED FIXTURE		44	☐	☑	18	792	☐	☐
				☐	☐			☐	☐
				☐	☐			☐	☐
				☐	☐			☐	☐
				☐	☐			☐	☐
				☐	☐			☐	☐
				☐	☐			☐	☐
				☐	☐			☐	☐
				☐	☐			☐	☐
				☐	☐			☐	☐
				☐	☐			☐	☐
				☐	☐			☐	☐
				☐	☐			☐	☐
				☐	☐			☐	☐
				☐	☐			☐	☐
				☐	☐			☐	☐
				☐	☐			☐	☐
					INSTALLED WATTS PAGE TOTAL:		792		
	Building total number of pages				Installed Watts Building Total (Sum of all pages)		792		
					Enter into LTG-1C Page 4 of 4				

1. Wattage shall be determined according to Section 130 (d and e). Wattage shall be rating of light fixture, not rating of bulb.
2. If Fail then describe on Page 2 of the Inspection Checklist Form and take appropriate action to correct. Verify building plans if necessary.

2008 Nonresidential Compliance Forms *July 2010*

DIST.	COUNTY	ROUTE	POST MILES TOTAL PROJECT	SHEET NO.	TOTAL SHEETS
03, 08	Sac, SBd	5, 15	23.3, R107.3	228	330

Jaswinder S Gill 08-15-13
REGISTERED ELECTRICAL ENGINEER DATE

REGISTERED PROFESSIONAL ENGINEER
JASWINDER GILL
No. 18551
Exp. 12-31-14
ELEC
STATE OF CALIFORNIA

9-16-13
PLANS APPROVAL DATE

The State of California or its officers or agents shall not be responsible for the accuracy or completeness of electronic copies of this plan sheet.

CALIFORNIA STATE FIRE MARSHAL APPROVED
Approval of this plan does not authorize or approve any omission or deviation from applicable regulations. Final approval is subject to field inspection. One set of approved plans shall be available on the project site at all times.
Reviewed by: FRANCIS SOLICH
Approval date: 09-11-13

DESIGN	BY Jaswinder Gill	CHECKED J. S. Sandhu	STATE OF CALIFORNIA DEPARTMENT OF TRANSPORTATION	DIVISION OF ENGINEERING SERVICES ELECTRICAL-MECHANICAL-WATER AND WASTEWATER DESIGN
DETAILS	BY Ed D.Tapalla 4/10	CHECKED Jaswinder Gill		
QUANTITIES	BY Jaswinder Gill	CHECKED J. S. Sandhu		

BRIDGE NO. 540004R/L
POST MILE R107.3

C. V. KANE SAFETY ROADSIDE REST AREA REHABILITATION
INDOOR LIGHTING COMPLIANCE FORMS 2

SHEET **EE1-0.2**

DOES SD Imperial Rev. 9/02
ORIGINAL SCALE IN INCHES FOR REDUCED PLANS 0 1 2 3
UNIT 3596
PROJECT NUMBER & PHASE 08000002291
DISREGARD PRINTS BEARING EARLIER REVISION DATES →
REVISION DATES (PRELIMINARY STAGE ONLY): 4/15/10, 6/14/10, 10/25/10, 01/28/11, 8/15/13
SHEET OF
18-SEP-2013 13:39
ee1_0_02.dgn

DIST.	COUNTY	ROUTE	POST MILES TOTAL PROJECT	SHEET NO.	TOTAL SHEETS
03, 08	Sac, SBd	5, 15	23.3, R107.3	229	330

Jaswinder S Gill 08-15-13
REGISTERED ELECTRICAL ENGINEER DATE

REGISTERED PROFESSIONAL ENGINEER JASWINDER GILL No. 18551 Exp. 12-31-14 ELEC STATE OF CALIFORNIA

9-16-13
PLANS APPROVAL DATE

The State of California or its officers or agents shall not be responsible for the accuracy or completeness of electronic copies of this plan sheet.

CERTIFICATE OF COMPLIANCE (Page 3 of 4) LTG-1C

Project Name: C.V. KANE SAFETY ROADSIDE REST AREA REHABILITATION | Date: 08-15-13

INDOOR LIGHTING SCHEDULE and FIELD ENERGY CHECKLIST

Fill in controls for all spaces: a) area controls, b) multi-level controls, c) manual daylighting controls for daylit areas> 250 sq ft, automatic daylighting controls for daylit areas> 2,500 sq ft, d) shut-off controls, e) display lighting controls, f) tailored lighting controls-general lighting controlled separately from display, ornamental and display case lighting and g) demand responsive automatic controls for retail stores> 50,000 sq ft, in accordance with Section 131.

MANDATORY LIGHTING CONTROLS - FIELD INSPECTION ENERGY CHECKLIST

Type/Description	Number of Units	Location in Building		Field Inspector Pass	Field Inspector Fail
Wall Occupancy Sensor, Bilevel	1	Break Room		☐	☐
Interior Lighting Control Station-N1 (ILCS-N1)	1	Comfort Station A		☐	☐
Interior Lighting Control Station-N2 (ILCS-N2)	1	Comfort Station B		☐	☐
Timer Switch	5	Plumbing Chase And Water Treatment		☐	☐
				☐	☐
				☐	☐
				☐	☐
				☐	☐
				☐	☐
				☐	☐
				☐	☐
				☐	☐
			☐	☐	☐

Field Inspectors's Notes or Descripancies:

2008 Nonresidential Compliance Forms *July 2010*

CERTIFICATE OF COMPLIANCE (Page 4 of 4) LTG-1C

Project Name: C.V. KANE SAFETY ROADSIDE REST AREA REHABILITATION | Date: 08-15-13

Conditioned and Unconditioned space Lighting must not be combined for compliance

Indoor Lighting Power for Conditioned Spaces		Watts	Indoor Lighting Power for Unconditioned Spaces		Watts
Installed Lighting (from Conditioned LTG-1C Page 2		792	Installed Lighting (from Unconditioned LTG-1C Page 2		4420
Lighting Control Credit Conditioned Spaces (from LTG-2C)	-	35	Lighting Control Credit Unconditioned Spaces (from LTG-2C)	-	-
Adjusted Installed Lighting Power	=	757	Adjusted Installed Lighting Power	=	4420
Complies if Installed ≤ Allowed			Complies if Installed ≤ Allowed		
Allowed Lighting Power Conditioned Spaces (from LTG-3C)		1,123	Allowed Lighting Power Unconditioned Spaces (from LTG-3C)		4,864

Required Acceptance Tests

Designer:
This form is to be used by the designer and attached to the plans. Listed below is the acceptance test for the lighting system, LTG-2A and LTG-3A. The designer is required to check the acceptance tests and list all control devices serving the building or space shall be certified as meeting the Acceptance Requirements for Code Compliance. If all the lighting system or control of a certain type requires a test, list the different lighting and the number of systems. The NA7 Section in the Appendix of the Nonresidential Reference Appendices Manual describes the test. Since this form will be part of the plans, completion of this section will allow the responsible party to budget for the scope of work appropriately. Forms can be grouped by type of Luminaire controlled.

Enforcement Agency:
System Acceptance. Before Occupancy Permit is granted for a newly constructed building or space or when ever new lighting system with controls is installed in the building or space shall be certified as meeting the Acceptance Requirements.
The LTG-2A and LTG-3A forms are not considered a complete form and are not to be accepted by the enforcement agency unless the boxes are checked and/or filled and signed. In addition, a Certificate of Acceptance forms shall be submitted to the enforcement agency that certifies plans, specifications, installation certificates, and operating and maintenance information meet the requirements of S 10-103 (b) of Title 24 Part 6. The field inspector must receive the properly filled out and signed forms before the building can receive final occupancy. A copy of the LTG-2A and LTG-3A for each different lighting luminaire control(s) must be provided to the owner of the building for their records.

Luminaires Controlled				LTG-2A and LTG-3A
Equipment Requiring Testing	Description	Number of like Controls	Location	Controls and Sensors and Automatic Daylighting Controls Acceptance
ILCS-N1	INDOOR PHOTOELECTRIC SENSOR	1	COMFORT STATION A	☑
ILCS-N2	INDOOR PHOTOELECTRIC SENSOR	1	COMFORT STATION B	☑
Wall OC, Bilevel	OCCUPANCY SENSOR	1	BREAK ROOM	☑
				☐
				☐
				☐
				☐
				☐
				☐
				☐
				☐
				☐
				☐
				☐

2008 Nonresidential Compliance Forms *July 2010*

CALIFORNIA STATE FIRE MARSHAL APPROVED
Approval of this plan does not authorize or approve any omission or deviation from applicable regulations. Final approval is subject to field inspection. One set of approved plans shall be available on the project site at all times.
Reviewed by: FRANCIS SOLICH
Approval date: 09-11-13

	BY	CHECKED
DESIGN	Jaswinder Gill	J. S. Sandhu
DETAILS	Ed D.Tapalla 4/10	Jaswinder Gill
QUANTITIES	Jaswinder Gill	J. S. Sandhu

STATE OF CALIFORNIA DEPARTMENT OF TRANSPORTATION

DIVISION OF ENGINEERING SERVICES ELECTRICAL-MECHANICAL-WATER AND WASTEWATER DESIGN

BRIDGE NO. 540004R/L
POST MILE R107.3

C. V. KANE SAFETY ROADSIDE REST AREA REHABILITATION
INDOOR LIGHTING COMPLIANCE FORMS 3

SHEET EE1-0.3

DOES SD Imperial Rev. 9/02

ORIGINAL SCALE IN INCHES FOR REDUCED PLANS 0 1 2 3

UNIT 3596
PROJECT NUMBER & PHASE 08000002291

DISREGARD PRINTS BEARING EARLIER REVISION DATES → REVISION DATES (PRELIMINARY STAGE ONLY) 4/15/10 6/14/10 10/25/10 01/26/11 8/15/13 SHEET OF

18-SEP-2013 13:40
ee1_0_03.dgn

Notes:

1. To pull box. For continuation, see sheet EE0-03.
2. * 3"C. 4*4/0, 1*2G.
   * 2"C, MT with pull rope.
3. For continuation, see sheet EE0-05.
4. 2"C PVC, (2) 12-pair telephone cables.
5. ¾"C, 1*2G. Bond to interior cold water pipe and structural steel.
6. ¾"C, 1*2G to ground bus inside IFSIA.
7. ¾"C, 1*2G to ground bar.
8. 1"C, 2*8, 1*10G to Picnic Shelter lights and Interpretive Center lights, (Conductor numbers are L61 and N6) and 2*10, 1*10G to display lights at Interpretive Center, (Conductor numbers are L110, N10).
9. For schematic diagram, see sheet EE8-1.3.
10. For schematic diagram, see sheet EE8-1.5.
11. 4"C, MT with pull rope to the telephone riser pole.
12. (2) ¾"C, MT with pull rope to public pay telephones.
13. 8' x 8' x ¾" exterior grade plywood. Paint plywood prior to the installation.
14. 2"C, 25-pair telephone cable to pull box at the southbound SRRA.
15. 1"C, 3*8, 1*10G to Southbound SRRA area light.
16. Not used.
17. Not used.
18. 1"C, 2*10, 1*10G power for public pay telephones.
20. To pull box. For continuation, see sheet EE4-0.1.
21. 1"C, 1 communication cable.
22. To pull box. For continuation, see sheet EE0-07.
23. 1"C, 2*6, 1*6G to Car parking lights. Conductor numbers are L41 and N4.
24. 1"C, 2*8, 1*10G for Post-top walkway lights. Conductor numbers are L81 and N8.

CALIFORNIA STATE FIRE MARSHAL APPROVED

Approval of this plan does not authorize or approve any omission or deviation from applicable regulations. Final approval is subject to field inspection. One set of approved plans shall be available on the project site at all times.

Reviewed by: FRANCIS SOLICH

Approval date: 09-11-13

DIST.	COUNTY	ROUTE	POST MILES TOTAL PROJECT	SHEET NO.	TOTAL SHEETS
03, 08	Sac, SBd	5, 15	23.3, R107.3	230	330

Jaswinder S Gill 08-15-13

REGISTERED ELECTRICAL ENGINEER — DATE

REGISTERED PROFESSIONAL ENGINEER JASWINDER GILL No. 18551 Exp. 12-31-14 ELEC STATE OF CALIFORNIA

9-16-13

PLANS APPROVAL DATE

The State of California or its officers or agents shall not be responsible for the accuracy or completeness of electronic copies of this plan sheet.

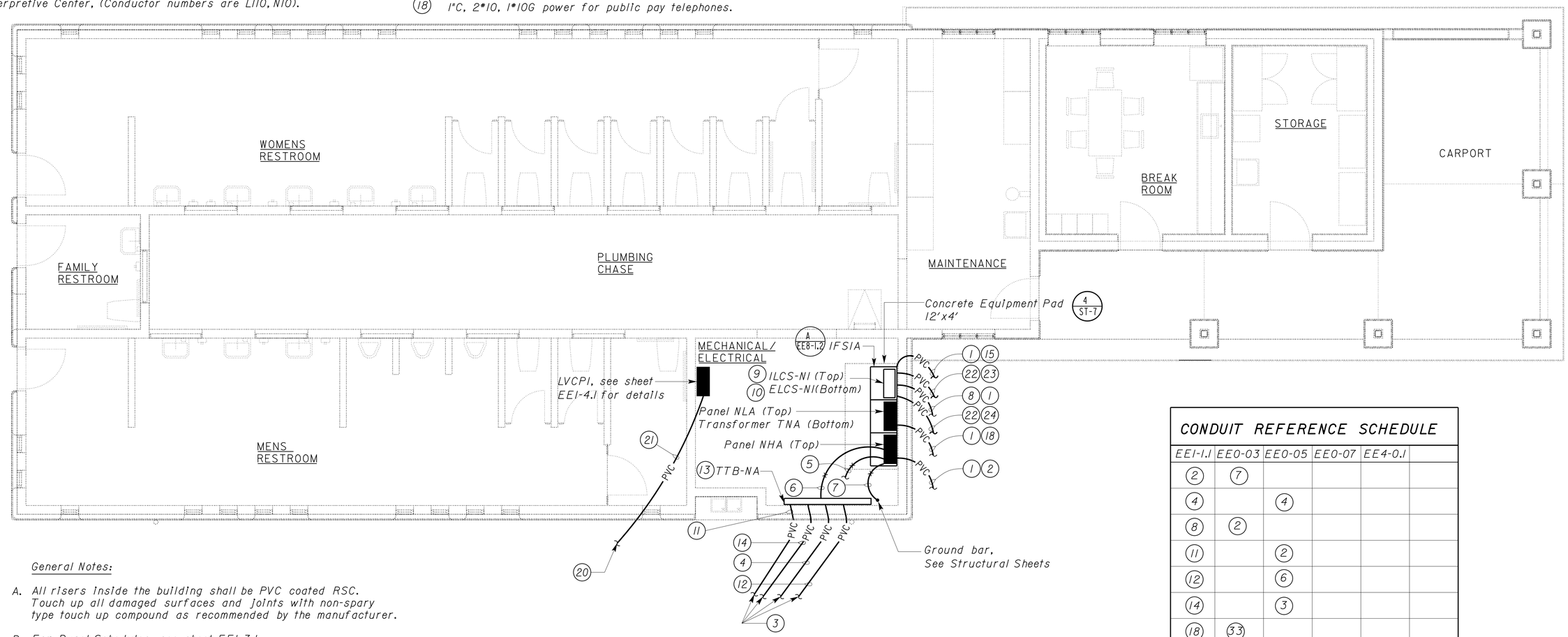

PLAN

SCALE 1/4" = 1'-0"

General Notes:

A. All risers inside the building shall be PVC coated RSC. Touch up all damaged surfaces and joints with non-spary type touch up compound as recommended by the manufacturer.

B. For Panel Schedules, see sheet EE1-3.1.

C. All conduits terminated at the TTB shall be terminated 2' above the finished floor. All empty conduits shall be capped.

* Example: Note No. 2 on plan sheet EE1-1.1 is same as Note No. 7 on plan sheet EE0.03.

CONDUIT REFERENCE SCHEDULE

EE1-1.1	EE0-03	EE0-05	EE0-07	EE4-0.1	
2	7				
4		4			
8	2				
11		2			
12		6			
14		3			
18	33				
21				8	
23			2		
24			14		

THIS DRAWING ACCURATE FOR ELECTRICAL WORK ONLY

	BY	CHECKED
DESIGN	Jaswinder Gill	J. S. Sandhu
DETAILS	Ed D.Tapalla 9/09	Jaswinder Gill
QUANTITIES	Jaswinder Gill	J. S. Sandhu

STATE OF CALIFORNIA DEPARTMENT OF TRANSPORTATION

DIVISION OF ENGINEERING SERVICES ELECTRICAL-MECHANICAL-WATER AND WASTEWATER DESIGN

BRIDGE NO. 540004R/L

POST MILE R107.3

C. V. KANE SAFETY ROADSIDE REST AREA REHABILITATION

STRUCTURE 1 COMFORT STATION A

PANEL LAYOUT

SHEET EE1-1.1

DOES SD Imperial Rev. 9/02

ORIGINAL SCALE IN INCHES FOR REDUCED PLANS 0 1 2 3

UNIT 3596

PROJECT NUMBER & PHASE 08000002291

DISREGARD PRINTS BEARING EARLIER REVISION DATES

REVISION DATES (PRELIMINARY STAGE ONLY) 12/17/09 02/18/10 04/05/10 6/14/10 10/25/10 01/26/11 8/15/13

SHEET OF

13-SEP-2013 07:45

ee1_1_01.dgn

DIST.	COUNTY	ROUTE	POST MILES TOTAL PROJECT	SHEET NO.	TOTAL SHEETS
03, 08	Sac, SBd	5, 15	23.3, R107.3	231	330

REGISTERED ELECTRICAL ENGINEER — 08-15-13 DATE

REGISTERED PROFESSIONAL ENGINEER — JASWINDER GILL — No. 18551 — Exp. 12-31-14 — ELEC — STATE OF CALIFORNIA

9-16-13
PLANS APPROVAL DATE

The State of California or its officers or agents shall not be responsible for the accuracy or completeness of electronic copies of this plan sheet.

CALIFORNIA STATE FIRE MARSHAL APPROVED

Approval of this plan does not authorize or approve any omission or deviation from applicable regulations. Final approval is subject to field inspection. One set of approved plans shall be available on the project site at all times.

Reviewed by: FRANCIS SOLICH
Approval date: 09-11-13

General Notes:

A. *Coordinate installation of junction boxes and electrical equipments inside plumbing chase with the Mechanical Contractor.*

B. *No junction box and electrical equipment shall be installed behind pipes at the plumbing chase. Provide 6" clearance from any mechanical pipes.*

C. *Unless otherwise noted, conduit shown concealed in floor shall be ¾"C, 2#12, 1#12G.*

D. *All risers inside the building shall be PVC coated RSC. Touch up all damaged surfaces and joints with a non-spray type touch up compound as recommended by the manufacturer.*

E. *For exact location of heat pump units, water heater and exhaust fans, see Mechanical plans.*

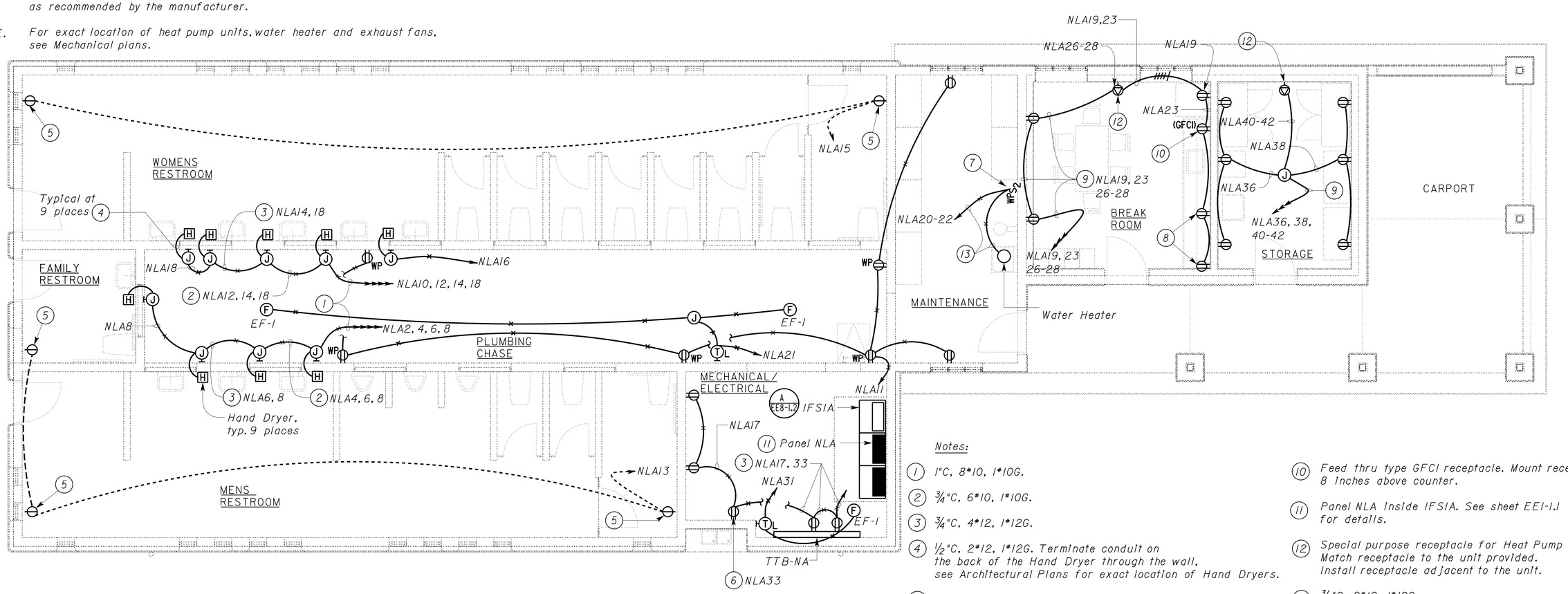

PLAN
SCALE 1/4" = 1'-0"

Notes:

1. *1"C, 8#10, 1#10G.*
2. *¾"C, 6#10, 1#10G.*
3. *¾"C, 4#12, 1#12G.*
4. *½"C, 2#12, 1#12G. Terminate condult on the back of the Hand Dryer through the wall, see Architectural Plans for exact location of Hand Dryers.*
5. *Flush mounted single receptacle with steel locking cover. Mount at 2' above finished floor.*
6. *Mount receptacle to suit electric water chiller.*
7. *Water heater disconnect.*
8. *Mount receptacles 8 inches above counter.*
9. *¾"C, 6#12, 1#12G.*
10. *Feed thru type GFCI receptacle. Mount receptacle 8 inches above counter.*
11. *Panel NLA inside IFSIA. See sheet EE1-1.1 for details.*
12. *Special purpose receptacle for Heat Pump Unit. Match receptacle to the unit provided. Install receptacle adjacent to the unit.*
13. *¾"C, 2#10, 1#10G.*

THIS DRAWING ACCURATE FOR ELECTRICAL WORK ONLY

	BY	CHECKED
DESIGN	Jaswinder Gill	J. S. Sandhu
DETAILS	Ed D.Tapalla 9/09	Jaswinder Gill
QUANTITIES	Jaswinder Gill	J. S. Sandhu

STATE OF CALIFORNIA
DEPARTMENT OF TRANSPORTATION

DIVISION OF ENGINEERING SERVICES
ELECTRICAL-MECHANICAL-WATER AND WASTEWATER DESIGN

BRIDGE NO. 540004R/L
POST MILE R107.3

C. V. KANE
SAFETY ROADSIDE REST AREA REHABILITATION
STRUCTURE 1 COMFORT STATION A
POWER PLAN

SHEET EE1-1.2

DOES SD Imperial Rev. 9/02

ORIGINAL SCALE IN INCHES FOR REDUCED PLANS 0 1 2 3

UNIT 3596
PROJECT NUMBER & PHASE 08000002291

DISREGARD PRINTS BEARING EARLIER REVISION DATES →

REVISION DATES (PRELIMINARY STAGE ONLY): 12/17/09 02/18/10 04/05/10 6/14/10 10/25/10 01/25/11 8/15/13

SHEET OF

18-SEP-2013 13:40

ee1_1_02.dgn

DIST.	COUNTY	ROUTE	POST MILES TOTAL PROJECT	SHEET NO.	TOTAL SHEETS
03, 08	Sac, SBd	5, 15	23.3, R107.3	232	330

REGISTERED ELECTRICAL ENGINEER — 08-15-13 DATE

REGISTERED PROFESSIONAL ENGINEER — JASWINDER GILL — No. 18551 — Exp. 12-31-14 — ELEC — STATE OF CALIFORNIA

9-16-13
PLANS APPROVAL DATE

The State of California or its officers or agents shall not be responsible for the accuracy or completeness of electronic copies of this plan sheet.

CALIFORNIA STATE FIRE MARSHAL APPROVED

Approval of this plan does not authorize or approve any omission or deviation from applicable regulations. Final approval is subject to field inspection. One set of approved plans shall be available on the project site at all times.

Reviewed by: FRANCIS SOLICH
Approval date: 09-11-13

Notes:

1. *Armored cable to infrared sensor at the faucet. Install armored cable through PVC sleeve. For details of PVC sleeve, see Architectural plans.*
2. *Armored cable to solenoid valve operator.*
3. *Provide and install all hardware as required for the installation of the low voltage transformer. Mount transformer inside a surface mounted enclosure at 12 inches above the highest horizontal mechanical pipe.*
4. *Mount combination infrared sensor and override button in a flush mounted junction box at location as shown on the Architectural plans. For details, see Architectural plans.*
5. *½"C. conductors as required for the operation of the combination infrared sensor and override button.*

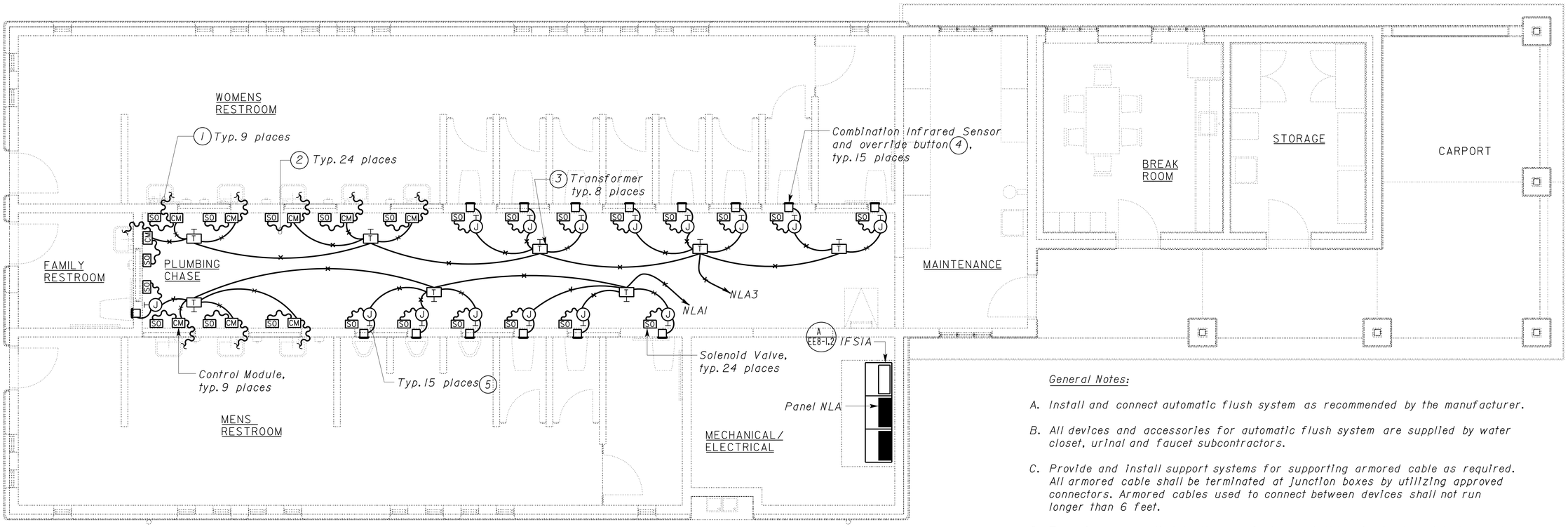

PLAN
SCALE 1/4" = 1'-0"

General Notes:

A. *Install and connect automatic flush system as recommended by the manufacturer.*

B. *All devices and accessories for automatic flush system are supplied by water closet, urinal and faucet subcontractors.*

C. *Provide and install support systems for supporting armored cable as required. All armored cable shall be terminated at junction boxes by utilizing approved connectors. Armored cables used to connect between devices shall not run longer than 6 feet.*

D. *Transformer supplied by the manufacturer shall be sized adequately to supply minimum of 3 units. Contractor has the option of installing one transformer per unit at no extra cost to the State.*

E. *Conduits and conductor system as shown is diagrammatic only. Exact system layout shall depend upon the particular automatic flush system installed.*

F. *Built-in infrared sensors at the lavatory faucets are not shown for clarity.*

G. *For details and schematic diagrams, see sheet EE8-1.1.*

H. *All the low voltage conductors shall be installed inside conduits, as shown on the plans.*

THIS DRAWING ACCURATE FOR ELECTRICAL WORK ONLY

	BY	CHECKED
DESIGN	Jaswinder Gill	J. S. Sandhu
DETAILS	Ed D.Tapalla 9/09	Jaswinder Gill
QUANTITIES	Jaswinder Gill	J. S. Sandhu

STATE OF CALIFORNIA
DEPARTMENT OF TRANSPORTATION

DIVISION OF ENGINEERING SERVICES
ELECTRICAL-MECHANICAL-WATER AND WASTEWATER DESIGN

BRIDGE NO. 540004R/L
POST MILE R107.3

C. V. KANE
SAFETY ROADSIDE REST AREA REHABILITATION
STRUCTURE 1 COMFORT STATION A
AUTOMATIC FLUSH SYSTEM

SHEET EE1-1.3

DOES SD Imperial Rev. 9/02

ORIGINAL SCALE IN INCHES FOR REDUCED PLANS 0 1 2 3

UNIT 3596
PROJECT NUMBER & PHASE 08000002291

DISREGARD PRINTS BEARING EARLIER REVISION DATES → 12/17/09 02/18/10 04/05/10 6/14/10 10/25/10 01/28/11 8/15/13

REVISION DATES (PRELIMINARY STAGE ONLY) SHEET OF

18-SEP-2013 13:40

ee1_1_03.dgn

DIST.	COUNTY	ROUTE	POST MILES TOTAL PROJECT	SHEET NO.	TOTAL SHEETS
03, 08	Sac, SBd	5, 15	23.3, R107.3	233	330

CALIFORNIA STATE FIRE MARSHAL APPROVED
Approval of this plan does not authorize or approve any omission or deviation from applicable regulations. Final approval is subject to field inspection. One set of approved plans shall be available on the project site at all times.
Reviewed by: FRANCIS SOLICH
Approval date: 09-11-13

Jaswinder S Gill 08-15-13
REGISTERED ELECTRICAL ENGINEER DATE

REGISTERED PROFESSIONAL ENGINEER JASWINDER GILL No. 18551 Exp. 12-31-14 ELEC STATE OF CALIFORNIA

9-16-13
PLANS APPROVAL DATE

The State of California or its officers or agents shall not be responsible for the accuracy or completeness of electronic copies of this plan sheet.

General Notes:

A. *Unless otherwise noted, all home runs on this sheet shall be to TTB-NA. Telephone cables and Data cables shall be terminated at the type 110 (Category 6) punch down blocks.*

Notes:

1. *1"C, 3 Telephone cables, 3 Data cables.*
2. *3/4"C, 1 Telephone cable, 1 Data cable.*
3. *Mount communication outlet 8" above the counter.*
4. *1"C, 2 Telephone Cables, 2 Data cables.*

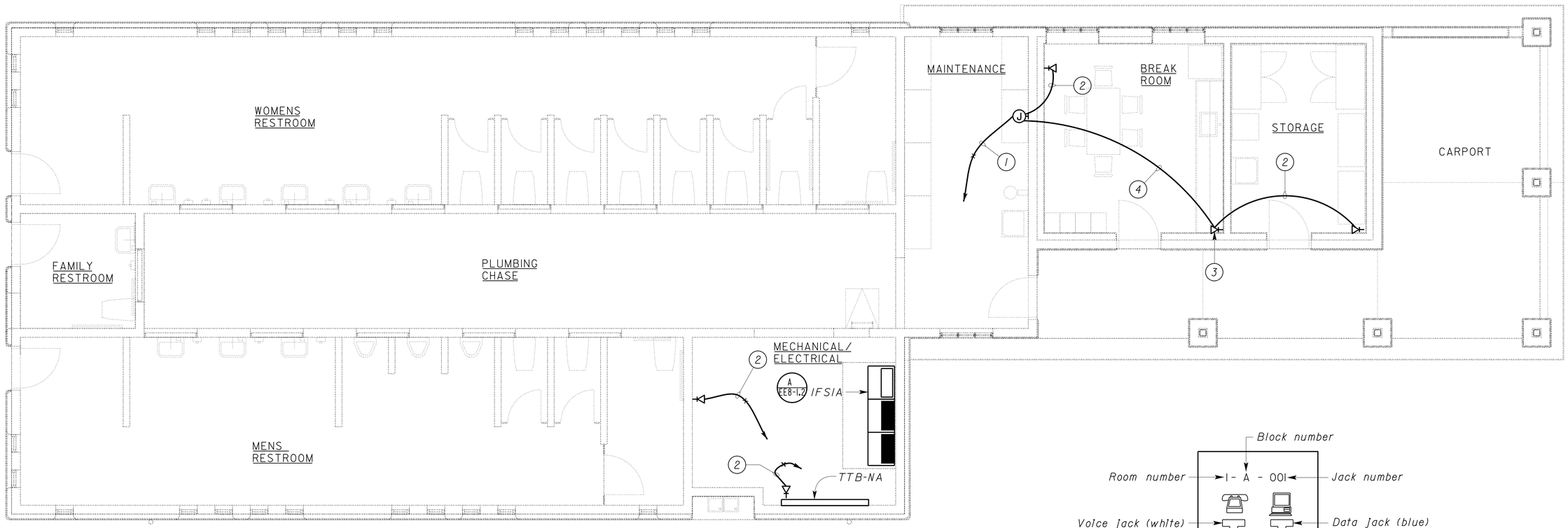

PLAN
SCALE 1/4" = 1'-0"

1 COMMUNICATION OUTLET
FACE PLATE DETAIL
NO SCALE

THIS DRAWING ACCURATE FOR ELECTRICAL WORK ONLY

DESIGN	BY Jaswinder Gill	CHECKED J. S. Sandhu
DETAILS	BY Ed D.Tapalla 9/09	CHECKED Jaswinder Gill
QUANTITIES	BY Jaswinder Gill	CHECKED J. S. Sandhu

STATE OF CALIFORNIA
DEPARTMENT OF TRANSPORTATION

DIVISION OF ENGINEERING SERVICES
ELECTRICAL-MECHANICAL-WATER AND WASTEWATER DESIGN

BRIDGE NO. 540004R/L
POST MILE R107.3

C. V. KANE
SAFETY ROADSIDE REST AREA REHABILITATION
STRUCTURE 1 COMFORT STATION A
TELEPHONE PLAN

SHEET **EE1-1.4**

DOES SD Imperial Rev. 9/02

ORIGINAL SCALE IN INCHES FOR REDUCED PLANS 0 1 2 3

UNIT 3596
PROJECT NUMBER & PHASE 08000002291

DISREGARD PRINTS BEARING EARLIER REVISION DATES
REVISION DATES (PRELIMINARY STAGE ONLY) 12/17/09 02/18/10 04/05/10 6/14/10 10/25/10 01/26/11 8/15/13
SHEET OF

18-SEP-2013 13:40
ee1_1_04.dgn

DIST.	COUNTY	ROUTE	POST MILES TOTAL PROJECT	SHEET NO.	TOTAL SHEETS
03, 08	Sac, SBd	5, 15	23.3, R107.3	234	330

REGISTERED ELECTRICAL ENGINEER — 08-15-13 DATE

REGISTERED PROFESSIONAL ENGINEER — JASWINDER GILL — No. 18551 — Exp. 12-31-14 — ELEC — STATE OF CALIFORNIA

9-16-13
PLANS APPROVAL DATE

The State of California or its officers or agents shall not be responsible for the accuracy or completeness of electronic copies of this plan sheet.

CALIFORNIA STATE FIRE MARSHAL APPROVED

Approval of this plan does not authorize or approve any omission or deviation from applicable regulations. Final approval is subject to field inspection. One set of approved plans shall be available on the project site at all times.

Reviewed by: FRANCIS SOLICH

Approval date: 09-11-13

General Notes:

A. *For exact location of lighting fixtures, see Architectural plans.*

B. *All conduits shown routed through the Restrooms shall be a concealed conduit system through ceiling.*

C. *For Lighting Fixtures Schedule, see sheet EE8-1.6.*

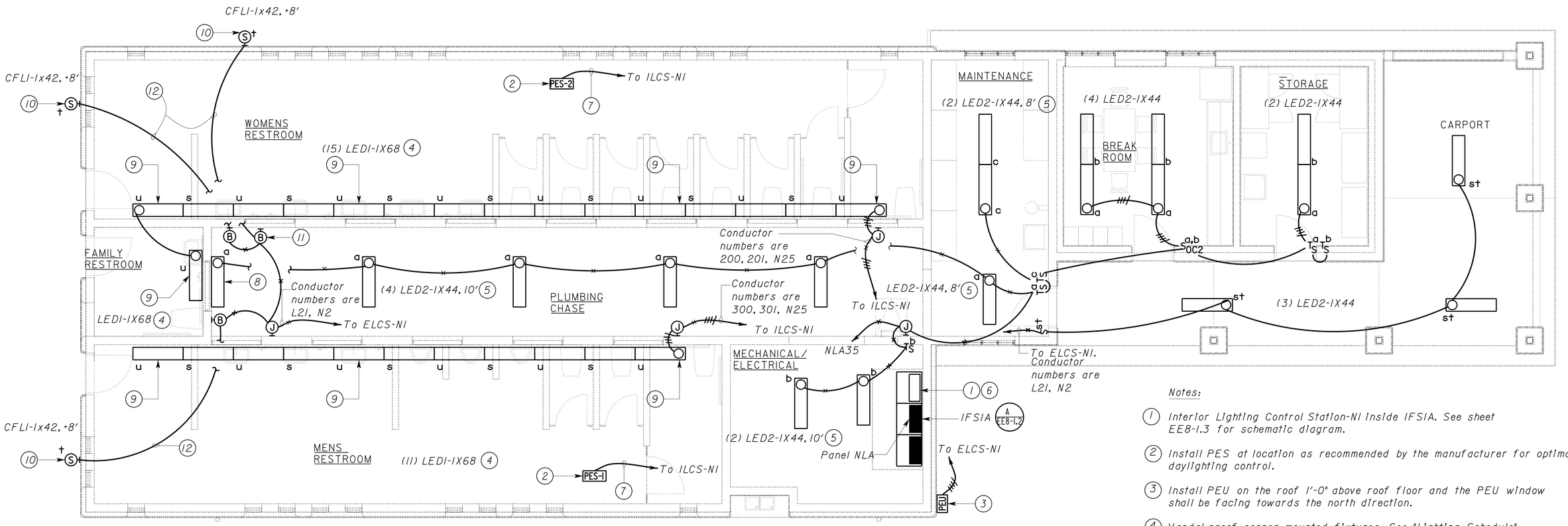

PLAN

SCALE 1/4" = 1'-0"

Notes:

1. *Interior Lighting Control Station-N1 inside IFSIA. See sheet EE8-1.3 for schematic diagram.*
2. *Install PES at location as recommended by the manufacturer for optimal daylighting control.*
3. *Install PEU on the roof 1'-0" above roof floor and the PEU window shall be facing towards the north direction.*
4. *Vandal proof corner mounted fixtures. See "Lighting Schedule" on sheet EE8-1.6.*
5. *Support fixtures on structural beams. See Structural sheets for location of these beams.*
6. *Exterior Lighting Control Station-N1 inside IFSIA. See sheet EE8-1.5 for schematic diagram.*
7. *1/2"C, control cables as required.*
8. *LED2-1X44, 10'. Wall mounted fixture.*
9. *Fixture with emergency LED driver. Mount emergency LED driver inside the fixture to energize one LED lamp for 90 minutes in case of power failure.*
10. *For fixture mounting detail, see detail 4 on sheet EE8-1.7.*
11. *Remote ballast for exterior light fixtures (CFLI-1x42). Install ballast inside a junction box. Typical for all exterior lights.*
12. *1/2"C, 2#10, 1#10G. Terminate conduit at an octagon concrete junction box. See fixture mounting detail 4 on sheet EE8-1.7.*

THIS DRAWING ACCURATE FOR ELECTRICAL WORK ONLY

	BY	CHECKED
DESIGN	Jaswinder Gill	J. S. Sandhu
DETAILS	Ed D.Tapalla 9/09	Jaswinder Gill
QUANTITIES	Jaswinder Gill	J. S. Sandhu

STATE OF CALIFORNIA DEPARTMENT OF TRANSPORTATION

DIVISION OF ENGINEERING SERVICES — ELECTRICAL-MECHANICAL-WATER AND WASTEWATER DESIGN

BRIDGE NO. 540004R/L — POST MILE R107.3

C. V. KANE SAFETY ROADSIDE REST AREA REHABILITATION

STRUCTURE 1 COMFORT STATION A — LIGHTING PLAN

SHEET EE1-2.1

DOES SD Imperial Rev. 9/02

ORIGINAL SCALE IN INCHES FOR REDUCED PLANS 0 1 2 3

UNIT 3596
PROJECT NUMBER & PHASE 08000002291

DISREGARD PRINTS BEARING EARLIER REVISION DATES → 12/17/09 02/18/10 04/05/10 6/24/10 10/25/10 01/28/11 1/3/12 8/15/13

REVISION DATES (PRELIMINARY STAGE ONLY) — SHEET — OF

18-SEP-2013 13:40

ee1_2_01.dgn

DIST.	COUNTY	ROUTE	POST MILES TOTAL PROJECT	SHEET NO.	TOTAL SHEETS
03, 08	Sac, SBd	5, 15	23.3, R107.3	235	330

Jaswinder S Gill
REGISTERED ELECTRICAL ENGINEER — 08-15-13 DATE

REGISTERED PROFESSIONAL ENGINEER — JASWINDER GILL — No. 18551 — Exp. 12-31-14 — ELEC — STATE OF CALIFORNIA

9-16-13
PLANS APPROVAL DATE

The State of California or its officers or agents shall not be responsible for the accuracy or completeness of electronic copies of this plan sheet.

CALIFORNIA STATE FIRE MARSHAL APPROVED
Approval of this plan does not authorize or approve any omission or deviation from applicable regulations. Final approval is subject to field inspection. One set of approved plans shall be available on the project site at all times.
Reviewed by: FRANCIS SOLICH
Approval date: 09-11-13

- • GFCI circuit breaker (6 milliampere).
- •• CIRCUIT BREAKER SHALL HAVE PERMANENT PROVISIONS FOR PLACEMENT OF A LOCK ON IT TO SECURE THE DEVICE IN THE OFF POSITION. THE LOCK-OUT DEVICE MUST BE PART OF THE CIRCUIT BREAKER AND/OR PANELBOARD ASSEMBLY AND MUST REMAIN IN PLACE AFTER THE PADLOCK IS REMOVED.

MAIN: 150 AMPERE, 3 POLE CB
VOLTS: 120/208 V, 3 PHASE, 4 WIRE

PANEL NLA
10K SCCR

FEEDER SIZE: 4#2/0, 1#8G
LOCATION: INSIDE IFSIA-COMFORT STATION A-MECH/ELECT. ROOM

DESCRIPTION	AMPERES A	AMPERES B	AMPERES C	BRK	CKT	A B C	CKT	BRK	AMPERES A	AMPERES B	AMPERES C	DESCRIPTION
AUTOFLUSH SYSTEM-MENS	2			20/1	1		2	20/1••	13			HAND DRYER-MENS RESTROOM
AUTOFLUSH SYSTEM-WOMENS		2		20/1	3		4	20/1••		13		HAND DRYER-MENS RESTROOM
DISPLAY LIGHTS AT INTERPRETIVE CENTER			1	20/1	5		6	20/1••			13	HAND DRYER-MENS RESTROOM
TELEPHONE BOOTHS	1			20/1	7		8	20/1••	13			HAND DRYER-FAMILY RESTROOM
LOW VOLTAGE CONTROL PANEL 1		1		20/1	9		10	20/1••		13		HAND DRYER-WOMENS RESTROOM
RECEPTACLES- PLUMBING CHASE			10.5	20/1•	11		12	20/1••			13	HAND DRYER-WOMENS RESTROOM
RECEPTACLE-MENS & FAMILY RESTROOM	1.5			20/1•	13		14	20/1••	13			HAND DRYER-WOMENS RESTROOM
RECEPTACLEs-WOMENS RESTROOM		1.5		20/1•	15		16	20/1••		13		HAND DRYER-WOMEN RESTROOM
RECEPTACLES- ELECT/MECH ROOM			6	20/1•	17		18	20/1••			13	HAND DRYER-WOMENS RESTROOM
RECEPTACLES BREAK ROOM	4.5			20/1•	19		20	30/2	12			HOT WATER HEATER-STORAGE
EXHAUST FAN- PLUMBING CHASE		4		20/1	21		22			12		
RECEPTACLES- BREAK ROOM COUNTER			4.5	20/1•	23		24	20/1			-	SPARE
INTERIOR LIGHTING CONTROL STATION-NI (ILCS-NI)	1			20/3	25		26	20/2	4			HEAT PUMP BREAK ROOM
		9			27		28			4		
			7		29		30	20/1			-	SPARE
EXHAUST FAN- ELECT/MECH	2			20/1	31		32	20/1	-			SPARE
RECEPTACLE- WATER CHILLER		6		20/1	33		34	20/1		-		SPARE
LIGHTING-ALL OTHER AREAS			6	20/1	35		36	20/1•			4.5	RECEPTACLES-STORAGE
SPARE	X			20/1	37		38	20/1•	4.5			RECEPTACLES-STORAGE
SPARE		X		20/1	39		40	20/2		4		HEAT PUMP STORAGE
SPARE			X	20/1	41		42				4	

A	B	C	
71	82	82	TOTAL CONNECTED LOAD (AMPERES PER PHASE)

MAIN DISTRIBUTION SWITCHBOARD-MSI (65 K SCCR)
MAIN: 400 AMPERE, 3 POLE CB
VOLTS: 277/480 V, 3 PHASE, 4 WIRE
LOCATION: UTILITY PAD-NORTHBOUND SRRA ONLY

DESCRIPTION	AMPS A	AMPS B	AMPS C	BRK	CKT
EXISTING SOUTHBOUND SRRA	40	45	38	70/3	1
SPARE	-	-	-	70/3	2
IFS3- WATER TREATMENT BUILDING	72	82	84	150/3	3
IFSIA & IFSIB-NORTHBOUND COMFORT STATIONS A & B	74	93	67	150/3	4
AERATOR PUMPS CONTROL STATION	7	7	7	20/3••	5
SEWAGE PUMP CONTROL STATION	7	7	7	20/3••	6
SPARE	-	-	-	30/3	7
SPARE	-	-	-	20/3	8
SPARE	-	-	-	100/3	9
SPARE	-	-	-	50/3	10
SPARE	-	-	-	30/3	11
SPARE	-	-	-	70/3	12
SPACE	-	-	-	30/3	13

	A	B	C
TOTAL LOAD (AMPS PER PHASE)	200	234	203

MAIN: 70 AMPERE, 3 POLE CB
VOLTS: 277/480 V, 3 PHASE, 4 WIRE

PANEL NHA
10K SCCR

FEEDER SIZE: 4#4/0, 1#2G
LOCATION: INSIDE IFSIA-COMFORT STATION A-MECH/ELECT. ROOM

DESCRIPTION	AMPERES A	AMPERES B	AMPERES C	BRK	CKT	A B C	CKT	BRK	AMPERES A	AMPERES B	AMPERES C	DESCRIPTION
TRANSFORMER TNA	31			60/3	1		2	20/1	1			BUILDING EXTERIOR LIGHTS
		35			3		4	20/1		10		LED2- CAR PARKING LIGHTS
			35		5		6	20/1			3	PICNIC SHELTER/INTERPRETIVE CENTER LIGHTS
SPARE	X			20/3	7		8	20/1	8			POST TOP WALKWAY LIGHTS-NEAR CAR PARKING
		X			9		10	20/1		-		SPARE
			X		11		12	20/1			X	SPARE
SOUTHBOUND SRRA AREA LIGHTS	3			30/3	13		14	20/1	X			SPARE
		3			15		16	20/2		X		SPARE
			3		17		18				X	

A	B	C	
43	48	41	TOTAL CONNECTED LOAD (AMPERES PER PHASE)

DESIGN	BY Jaswinder Gill	CHECKED J. S. Sandhu	
DETAILS	BY Ed D.Tapalla 9/09	CHECKED Jaswinder Gill	
QUANTITIES	BY Jaswinder Gill	CHECKED J. S. Sandhu	

STATE OF CALIFORNIA
DEPARTMENT OF TRANSPORTATION

DIVISION OF ENGINEERING SERVICES
ELECTRICAL-MECHANICAL-WATER AND WASTEWATER DESIGN

UNIT 3596
PROJECT NUMBER & PHASE 08000002291

BRIDGE NO. 540004R/L
POST MILE R107.3

C. V. KANE
SAFETY ROADSIDE REST AREA REHABILITATION
STRUCTURE 1 COMFORT STATION A
PANEL SCHEDULES

SHEET EE1-3.1

DISREGARD PRINTS BEARING EARLIER REVISION DATES → 12/11/09 02/18/10 6/14/10 10/25/10 01/26/11 1/27/12 8/15/13
REVISION DATES (PRELIMINARY STAGE ONLY) SHEET OF

ORIGINAL SCALE IN INCHES FOR REDUCED PLANS 0 1 2 3

DOES SD Imperial Rev. 9/02

18-SEP-2013 13:40
ee1_3_01.dgn

DIST.	COUNTY	ROUTE	POST MILES TOTAL PROJECT	SHEET NO.	TOTAL SHEETS
03, 08	Sac, SBd	5, 15	23.3, R107.3	236	330

Jaswinder S Gill — REGISTERED ELECTRICAL ENGINEER — 08-15-13 DATE

REGISTERED PROFESSIONAL ENGINEER — JASWINDER GILL — No. 18551 — Exp. 12-31-14 — ELEC — STATE OF CALIFORNIA

9-16-13
PLANS APPROVAL DATE

The State of California or its officers or agents shall not be responsible for the accuracy or completeness of electronic copies of this plan sheet.

CALIFORNIA STATE FIRE MARSHAL APPROVED

Approval of this plan does not authorize or approve any omission or deviation from applicable regulations. Final approval is subject to field inspection. One set of approved plans shall be available on the project site at all times.

Reviewed by: FRANCIS SOLICH
Approval date: 09-11-13

Notes:

1. Connect sensor cable to flow meter on the raw water pipe riser.
2. Connect sensor cable to flow meter on the potable water pipe riser.
3. 3/4"C, 1 People Counter control cable, as recommended by the People Counter manufacturer.
4. 1"C, 3 People Counter control cables.
5. 3/4"C, 1 sensor cable (flow meter).
6. 1"C, 2 sensor cables (flow meter).
7. Fiber media converter.

General Notes:

A. For Low Voltage Device Schedule, see sheet EE4-0.1.

B. For exact location of flow meters, raw water riser and potable water riser, see Mechanical and Water plans.

C. All conduits shown routed through the restrooms shall be a concealed conduit system through ceiling.

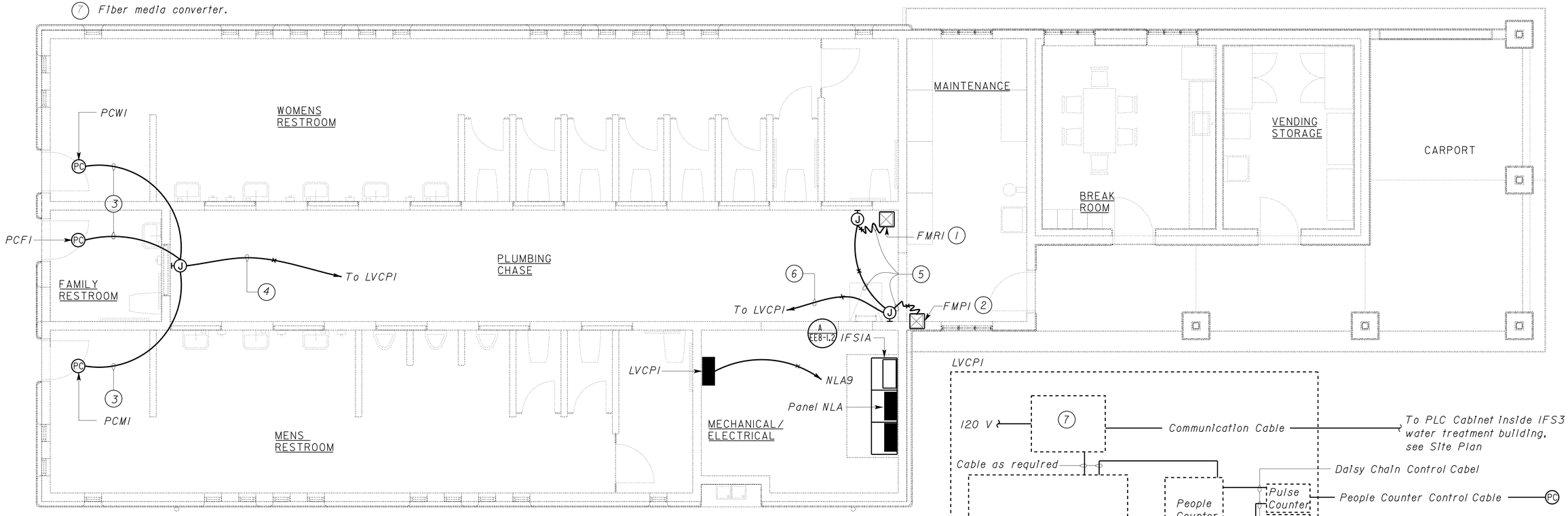

PLAN
SCALE 1/4" = 1'-0"

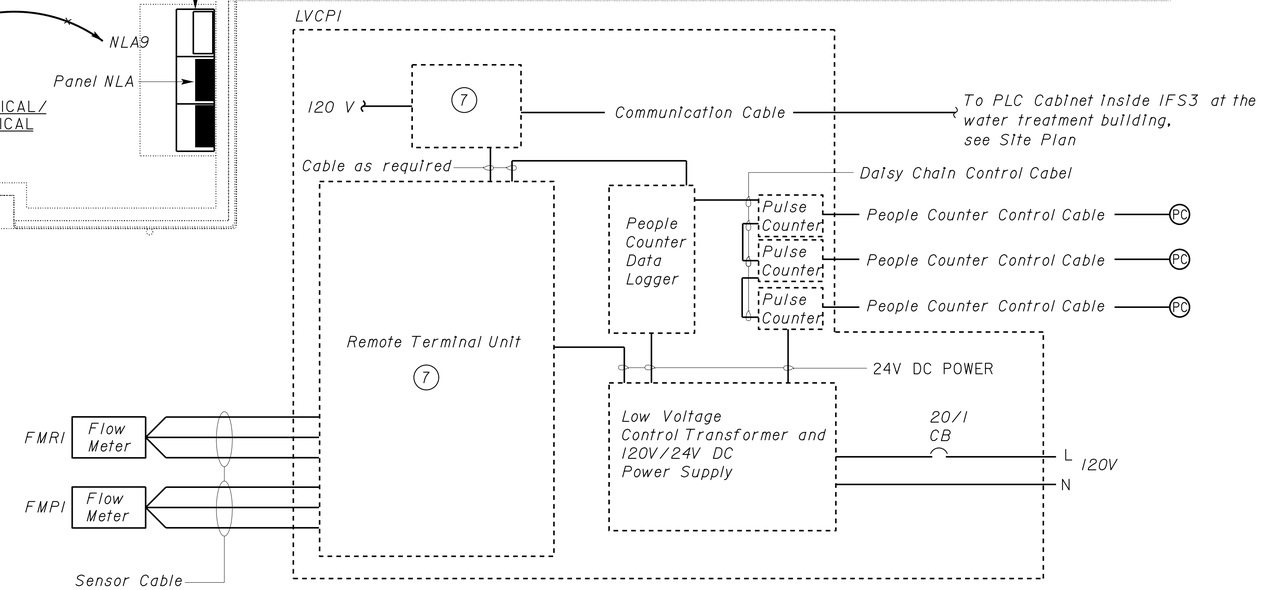

LOW VOLTAGE BLOCK DIAGRAM

THIS DRAWING ACCURATE FOR ELECTRICAL WORK ONLY

	BY	CHECKED
DESIGN	Jaswinder Gill	J. S. Sandhu
DETAILS	Ed D.Tapalla 9/09	Jaswinder Gill
QUANTITIES	Jaswinder Gill	J. S. Sandhu

STATE OF CALIFORNIA
DEPARTMENT OF TRANSPORTATION

DIVISION OF ENGINEERING SERVICES
ELECTRICAL-MECHANICAL-WATER AND WASTEWATER DESIGN

BRIDGE NO. 540004R/L
POST MILE R107.3

C. V. KANE
SAFETY ROADSIDE REST AREA REHABILITATION
STRUCTURE 1 COMFORT STATION A
LOW VOLTAGE ELECTRICAL PLANS

SHEET EE1-4.1

DOES SD Imperial Rev. 9/02

ORIGINAL SCALE IN INCHES FOR REDUCED PLANS 0 1 2 3

UNIT 3596
PROJECT NUMBER & PHASE 08000002291

DISREGARD PRINTS BEARING EARLIER REVISION DATES
REVISION DATES (PRELIMINARY STAGE ONLY) 12/17/09 02/18/10 04/05/10 6/04/10 10/25/10 01/26/11 1/3/12 8/15/13
SHEET OF

18-SEP-2013 13:40
ee1_4_01.dgn

DIST.	COUNTY	ROUTE	POST MILES TOTAL PROJECT	SHEET NO.	TOTAL SHEETS
03, 08	Sac, SBd	5, 15	23.3, R107.3	237	330

REGISTERED ELECTRICAL ENGINEER — 08-15-13 DATE

REGISTERED PROFESSIONAL ENGINEER — JASWINDER GILL — No. 18551 — Exp. 12-31-14 — ELEC — STATE OF CALIFORNIA

9-16-13
PLANS APPROVAL DATE

The State of California or its officers or agents shall not be responsible for the accuracy or completeness of electronic copies of this plan sheet.

General Notes:

A. All risers inside the building shall be PVC coated RSC. Touch up all damaged surfaces and joints with non-spary type touch up compound as recommended by the manufacturer.

B. For Panel Schedules, see sheet EE2-3.1.

C. All conduits terminated at the TTB shall be terminated 2' above the finished floor. All empty conduits shall be capped.

Notes:

1. To pull box. For continuation, see sheet EE0-03.
2. * 3"C, 4*4/0, 1*2G. * 2"C, MT with pull rope.
3. Not used.
4. (2) 2"C, MT with pull rope to the pull box.
5. ¾"C, 1*2G. Bond to interior cold water pipe and structural steel.
6. ¾"C, 1*2G to ground bus inside the IFSIB.
7. ¾"C, 1*2G to ground bar.
8. Not used.
9. To pull box. For continuation, see sheet EE0-05.
10. 1"C, MT with pull rope to pull box.
11. For schematic diagram, see sheet EE1-8.4.
12. 8' x 8' x ¾" exterior grade plywood. Paint plywood prior to the installation.
13. For schematic diagram, see sheet EE1-8.5.
14. Not used.
15. Not used.
16. Not used.
17. 1"C, 2*8, 1*10G for Post-top walkway lights. Conductor numbers are L101 and N10.
18. To pull box. For continuation, see sheet EE0-07.
19. 1"C, 1 communication cable.
20. To pull box. For continuation, see sheet EE4-01.
21. 1"C, 2 loop detector lead-in cables.
22. Low Voltage Control Panel 2. See sheet EE2-4.1 for details.
23. 1"C, 12-pair telephone cable.
24. 2"C, 4*6, 1*6G to Truck parking lights and On/Off Ramp lights. Conductor numbers are L141, N4 (Truck Parking/Sign Light) and L161, L181 (On/Off Ramp Lights).
25. ¾"C, 1 Telephone Cable and 1 Data Cable to TTB-NB.

CONDUIT REFERENCE SCHEDULE

EE2-1.1	EE0-03	EE0-05	EE0-07	EE4-0.1	
2	7				
4	18				
10		8			
17			5		
19				7	
21				9	
23		5			
24			10		

* Example: Note No. 2 on plan sheet EE2-1.1 is same as Note No. 7 on plan sheet EE0.03.

CALIFORNIA STATE FIRE MARSHAL APPROVED
Approval of this plan does not authorize or approve any omission or deviation from applicable regulations. Final approval is subject to field inspection. One set of approved plans shall be available on the project site at all times.
Reviewed by: FRANCIS SOLICH
Approval date: 09-11-13

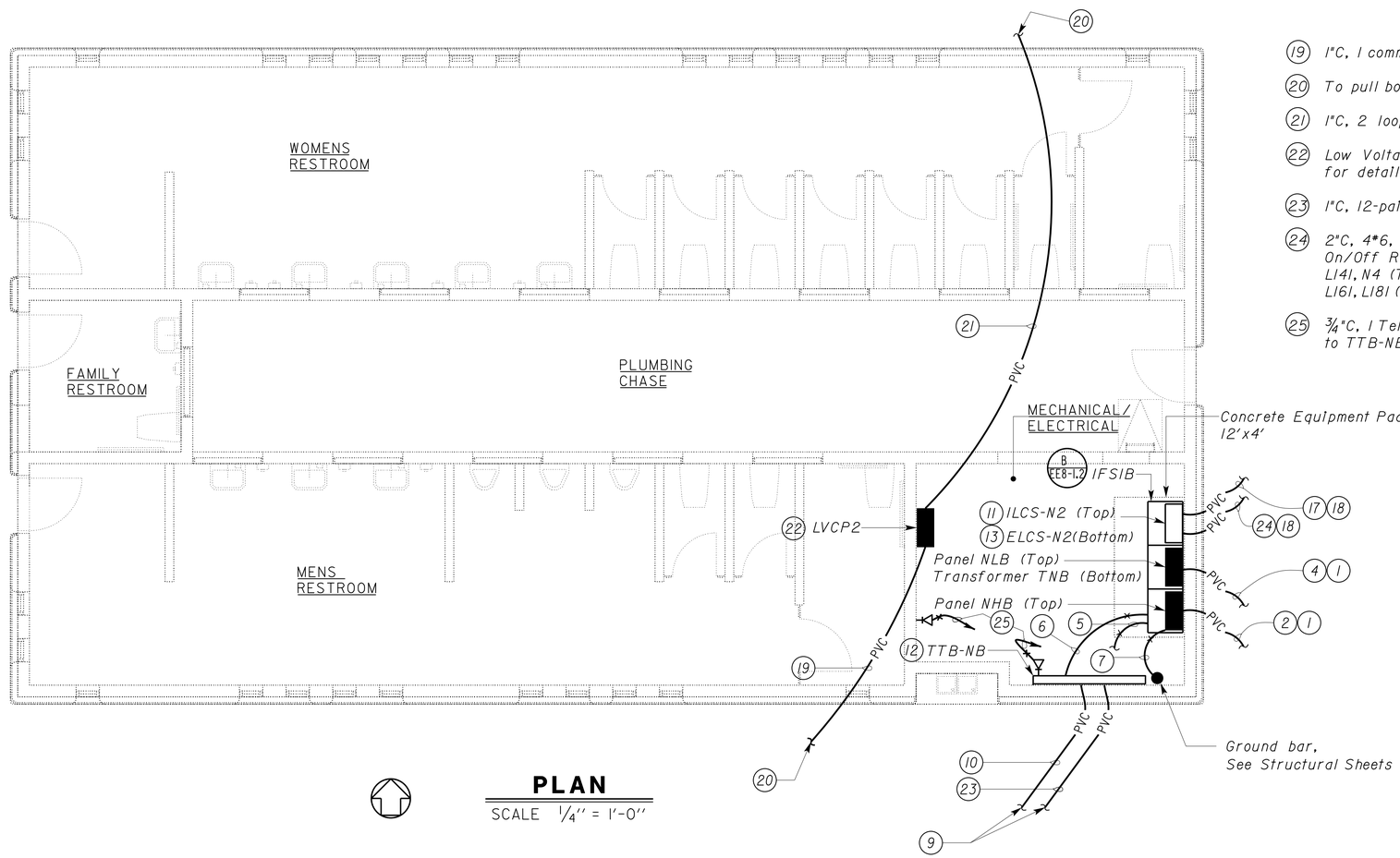

PLAN
SCALE 1/4" = 1'-0"

THIS DRAWING ACCURATE FOR ELECTRICAL WORK ONLY

	BY	CHECKED
DESIGN	Jaswinder Gill	J. S. Sandhu
DETAILS	Ed D.Tapalla 9/09	Jaswinder Gill
QUANTITIES	Jaswinder Gill	J. S. Sandhu

STATE OF CALIFORNIA
DEPARTMENT OF TRANSPORTATION

DIVISION OF ENGINEERING SERVICES
ELECTRICAL-MECHANICAL-WATER AND WASTEWATER DESIGN

BRIDGE NO. 540004R/L
POST MILE R107.3

C. V. KANE
SAFETY ROADSIDE REST AREA REHABILITATION
STRUCTURE 2 COMFORT STATION B
PANEL LAYOUT

SHEET EE2-1.1

DOES SD Imperial Rev. 9/02

ORIGINAL SCALE IN INCHES FOR REDUCED PLANS 0 1 2 3

UNIT 3596
PROJECT NUMBER & PHASE 08000002291

DISREGARD PRINTS BEARING EARLIER REVISION DATES → 12/11/09 02/18/10 04/05/10 6/14/10 10/28/10 01/28/11 1/3/12 08/20/12 8/15/13

REVISION DATES (PRELIMINARY STAGE ONLY) SHEET OF

18-SEP-2013 13:40

ee2_1_01.dgn

General Notes:

A. Coordinate installation of junction boxes and electrical equipments inside plumbing chase with the Mechanical Contractor.

B. No junction box and electrical equipment shall be installed behind pipes at the plumbing chase. Provide 6" clearance from any mechanical pipes.

C. Unless otherwise noted, conduit shown concealed in floor shall be ¾"C, 2*12, 1*12G.

D. All risers inside the building shall be PVC coated RSC. Touch up all damaged surfaces and joints with a non-spray type touch up compound as recommended by the manufacturer.

E. For exact location of exhaust fans, see Mechanical plans.

Notes:

1. 1"C, 8*10, 1*10G.
2. ¾"C, 6*10, 1*10G.
3. ¾"C, 4*12, 1*12G.
4. ½"C, 2*12, 1*12G. Terminate conduit on the back of the Hand Dryer through the wall, see Architectural Plans for exact location of Hand Dryers.
5. Flush mounted single receptacle with steel locking cover. Mount at 2' above finished floor.
6. Mount receptacle to suit electric water chiller.
7. Panel NLB inside IFSIB. See sheet EE2-1.1 for details.

CALIFORNIA STATE FIRE MARSHAL APPROVED
Approval of this plan does not authorize or approve any omission or deviation from applicable regulations. Final approval is subject to field inspection. One set of approved plans shall be available on the project site at all times.
Reviewed by: FRANCIS SOLICH
Approval date: 09-11-13

DIST.	COUNTY	ROUTE	POST MILES TOTAL PROJECT	SHEET NO.	TOTAL SHEETS
03, 08	Sac, SBd	5, 15	23.3, R107.3	238	330

Jaswinder S Gill 08-15-13
REGISTERED ELECTRICAL ENGINEER DATE

REGISTERED PROFESSIONAL ENGINEER JASWINDER GILL No. 18551 Exp. 12-31-14 ELEC STATE OF CALIFORNIA

9-16-13
PLANS APPROVAL DATE

The State of California or its officers or agents shall not be responsible for the accuracy or completeness of electronic copies of this plan sheet.

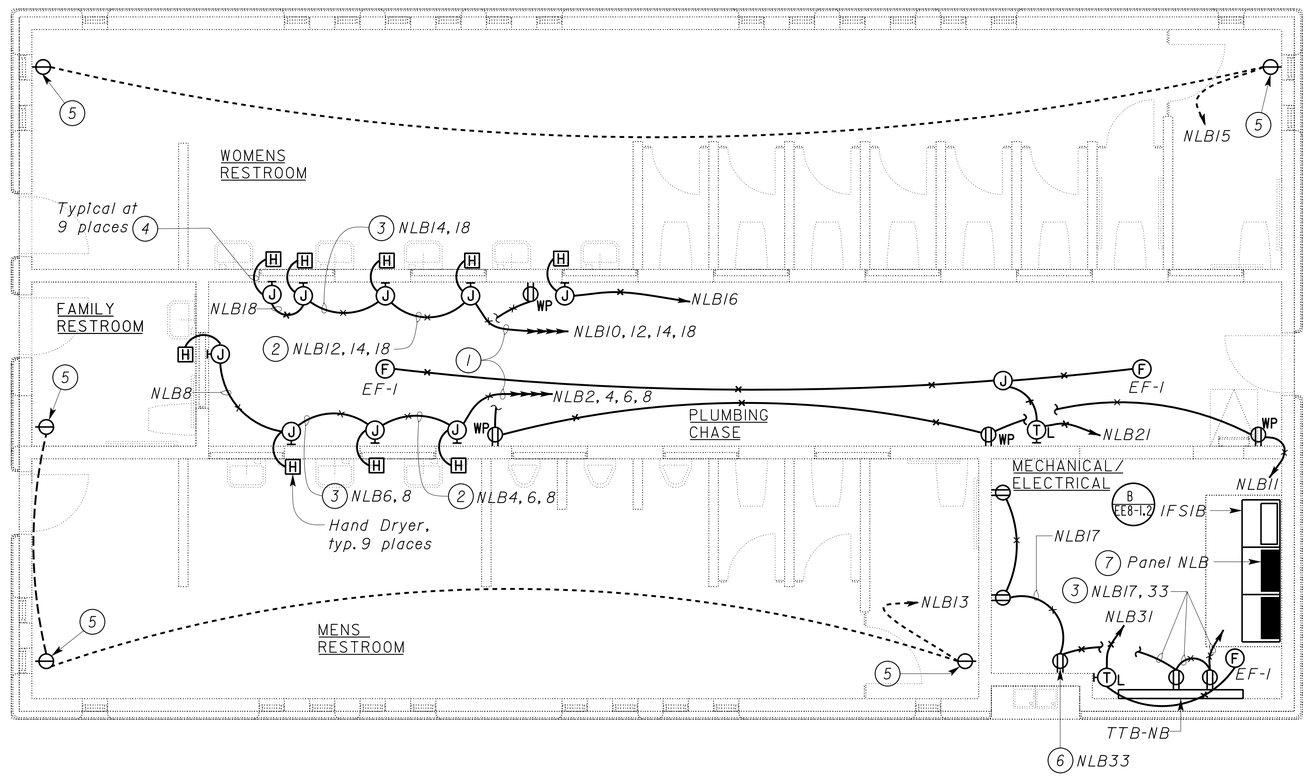

PLAN
SCALE 1/4" = 1'-0"

THIS DRAWING ACCURATE FOR ELECTRICAL WORK ONLY

	BY	CHECKED
DESIGN	Jaswinder Gill	J. S. Sandhu
DETAILS	Ed D.Tapalla 9/09	Jaswinder Gill
QUANTITIES	Jaswinder Gill	J. S. Sandhu

STATE OF CALIFORNIA
DEPARTMENT OF TRANSPORTATION

DIVISION OF ENGINEERING SERVICES
ELECTRICAL-MECHANICAL-WATER AND WASTEWATER DESIGN

BRIDGE NO. 540004R/L
POST MILE R107.3

C. V. KANE
SAFETY ROADSIDE REST AREA REHABILITATION
STRUCTURE 2 COMFORT STATION B
POWER PLAN

SHEET EE2-1.2

DOES SD Imperial Rev. 9/02

ORIGINAL SCALE IN INCHES FOR REDUCED PLANS 0 1 2 3

UNIT 3596
PROJECT NUMBER & PHASE 08000002291

DISREGARD PRINTS BEARING EARLIER REVISION DATES
REVISION DATES (PRELIMINARY STAGE ONLY) 12/18/09 02/18/10 04/05/10 6/14/10 10/28/10 01/26/11 11/4/11 1/28/12 8/15/13
SHEET OF

18-SEP-2013 13:40
ee2_1_02.dgn

DIST.	COUNTY	ROUTE	POST MILES TOTAL PROJECT	SHEET NO.	TOTAL SHEETS
03, 08	Sac, SBd	5, 15	23.3, R107.3	239	330

Jaswinder S Gill
REGISTERED ELECTRICAL ENGINEER — 08-15-13 DATE

REGISTERED PROFESSIONAL ENGINEER — JASWINDER GILL — No. 18551 — Exp. 12-31-14 — ELEC — STATE OF CALIFORNIA

9-16-13
PLANS APPROVAL DATE

The State of California or its officers or agents shall not be responsible for the accuracy or completeness of electronic copies of this plan sheet.

CALIFORNIA STATE FIRE MARSHAL APPROVED

Approval of this plan does not authorize or approve any omission or deviation from applicable regulations. Final approval is subject to field inspection. One set of approved plans shall be available on the project site at all times.

Reviewed by: FRANCIS SOLICH
Approval date: 09-11-13

Notes:

1. *Armored cable to Infrared sensor at the faucet. Install armored cable through PVC sleeve. For details of PVC sleeve, see Architectural plans.*
2. *Armored cable to solenoid valve operator.*
3. *Provide and Install all hardware as required for the Installation of the low voltage transformer. Mount transformer Inside a surface mounted enclosure at 12 Inches above the highest horizontal mechanical pipe.*
4. *Mount combination Infrared sensor and override button In a flush mounted Junction box at location as shown on the Architectural plans. For details, see Architectural plans.*
5. *½"C, conductors as required for the operation of the combination Infrared sensor and override button.*

General Notes:

A. *Install and connect automatic flush system as recommended by the manufacturer.*

B. *All devices and accessories for automatic flush system are supplied by water closet, urinal and faucet subcontractors.*

C. *Provide and Install support systems for supporting armored cable as required. All armored cable shall be terminated at Junction boxes by utilizing approved connectors. Armored cables used to connect between devices shall not run longer than 6 feet.*

D. *Transformer supplied by the manufacturer shall be sized adequately to supply minimum of 3 units. Contractor has the option of installing one transformer per unit at no extra cost to the State.*

E. *Conduits and conductor system as shown Is diagrammatic only. Exact system layout shall depend upon the particular automatic flush system installed.*

F. *Built-In Infrared sensors at the lavatory faucets are not shown for clarity.*

G. *For details and schematic diagrams, see sheet EE8-1.1.*

H. *All the low voltage conductors shall be installed Inside conduits, as shown on the plans.*

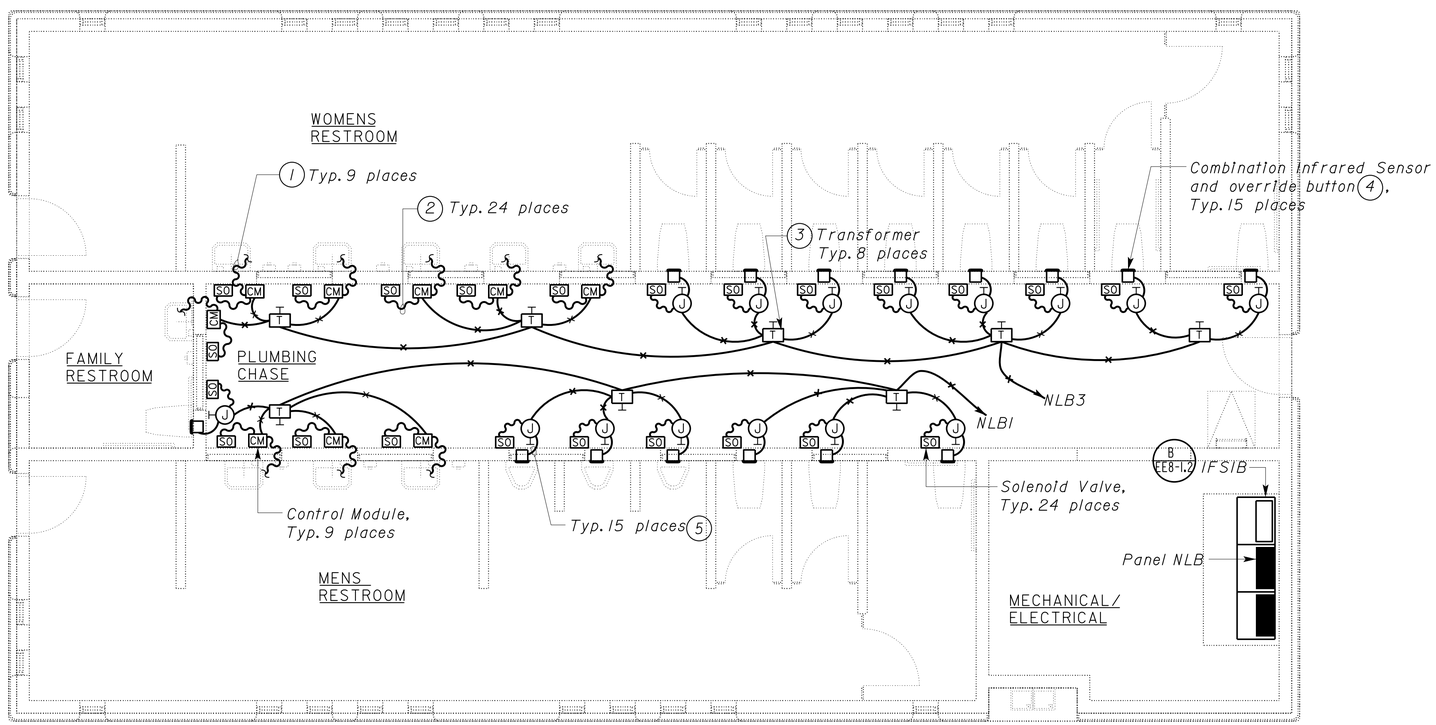

PLAN
SCALE 1/4" = 1'-0"

THIS DRAWING ACCURATE FOR ELECTRICAL WORK ONLY

	BY	CHECKED
DESIGN	Jaswinder Gill	J. S. Sandhu
DETAILS	Ed D.Tapalla 9/09	Jaswinder Gill
QUANTITIES	Jaswinder Gill	J. S. Sandhu

STATE OF CALIFORNIA
DEPARTMENT OF TRANSPORTATION

DIVISION OF ENGINEERING SERVICES
ELECTRICAL-MECHANICAL-WATER AND WASTEWATER DESIGN

BRIDGE NO. 540004R/L
POST MILE R107.3

C. V. KANE
SAFETY ROADSIDE REST AREA REHABILITATION
STRUCTURE 2 COMFORT STATION B
AUTOMATIC FLUSH SYSTEM

SHEET EE2-1.3

DOES SD Imperial Rev. 9/02

ORIGINAL SCALE IN INCHES FOR REDUCED PLANS 0 1 2 3

UNIT 3596
PROJECT NUMBER & PHASE 08000002291

DISREGARD PRINTS BEARING EARLIER REVISION DATES
REVISION DATES (PRELIMINARY STAGE ONLY): 12/18/09 02/18/10 04/05/10 6/04/10 10/25/10 01/26/11 11/4/11 1/24/12 8/15/13

SHEET OF

18-SEP-2013 13:40

ee2_1_03.dgn

DIST.	COUNTY	ROUTE	POST MILES TOTAL PROJECT	SHEET NO.	TOTAL SHEETS
03, 08	Sac, SBd	5, 15	23.3, R107.3	240	330

Jaswinder S Gill 08-15-13
REGISTERED ELECTRICAL ENGINEER DATE

REGISTERED PROFESSIONAL ENGINEER JASWINDER GILL No. 18551 Exp. 12-31-14 ELEC STATE OF CALIFORNIA

9-16-13
PLANS APPROVAL DATE

The State of California or its officers or agents shall not be responsible for the accuracy or completeness of electronic copies of this plan sheet.

CALIFORNIA STATE FIRE MARSHAL APPROVED
Approval of this plan does not authorize or approve any omission or deviation from applicable regulations. Final approval is subject to field inspection. One set of approved plans shall be available on the project site at all times.
Reviewed by: FRANCIS SOLICH
Approval date: 09-11-13

Notes:

1. Interior Lighting Control Station-N2 inside IFSIB. See sheet EE8-1.4 for Schematic Diagram.
2. Install PES at location as recommended by the manufacturer for optimal daylighting controls.
3. Install PEU on the roof 1'-0" above roof floor and the PEU window shall be facing towards the north direction.
4. Vandal proof corner mounted fixtures. See "Lighting Schedule" on sheet EE8-1.6.
5. Support fixtures on structural beams. See Structural sheets for location of these beams.
6. Exterior Lighting Control Station-N2 inside IFSIB. See sheet EE8-1.5 for schematic diagram.
7. ½"C, control cables as required.
8. LED2-1X44, 10'. Wall mounted fixture.
9. Fixture with emergency LED driver. Mount emergency LED driver inside the fixture to energize one LED lamp for 90 minutes in case of power failure.
10. For fixture mounting detail, see detail 4 on sheet EE8-1.7.
11. Remote ballast for exterior light fixtures (CFLI-1x42). Install ballast inside a junction box. Typical for all exterior lights.
12. ½"C, 2#10, 1#10G. Terminate conduit at an octagon concrete junction box. See fixture mounting detail 4 on sheet EE8-1.7.

General Notes:

A. For exact location of lighting fixtures, see Architectural plans.
B. All conduits shown routed through the restrooms shall be a concealed conduit system through ceiling.
C. For Lighting Fixtures Schedule, see sheet EE8-1.6.

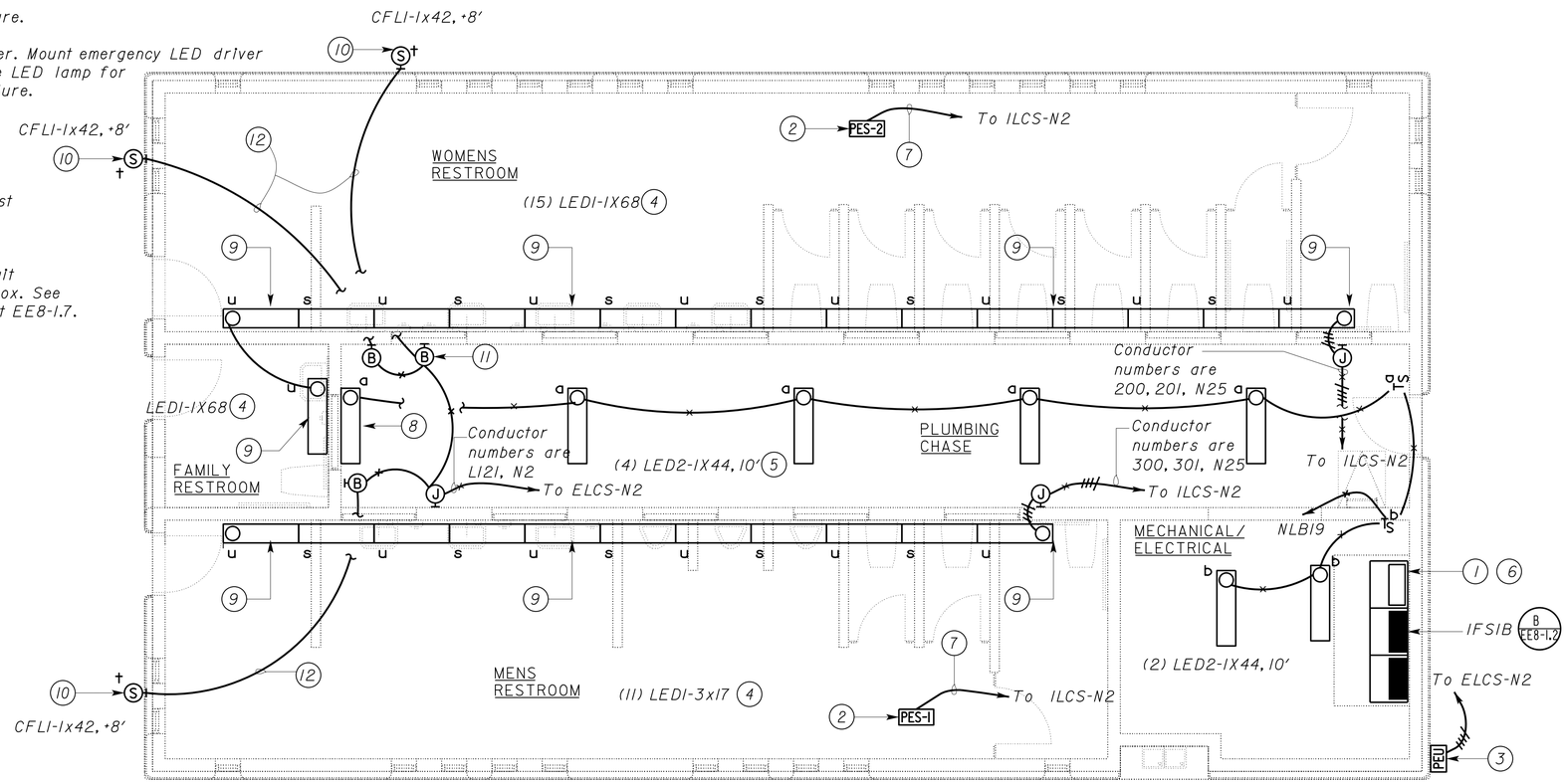

PLAN
SCALE 1/4" = 1'-0"

THIS DRAWING ACCURATE FOR ELECTRICAL WORK ONLY

DESIGN	BY Jaswinder Gill	CHECKED J. S. Sandhu	
DETAILS	BY Ed D.Tapalla 9/09	CHECKED Jaswinder Gill	
QUANTITIES	BY Jaswinder Gill	CHECKED J. S. Sandhu	

STATE OF CALIFORNIA
DEPARTMENT OF TRANSPORTATION

DIVISION OF ENGINEERING SERVICES
ELECTRICAL-MECHANICAL-WATER AND WASTEWATER DESIGN

BRIDGE NO. 540004R/L
POST MILE R107.3

C. V. KANE SAFETY ROADSIDE REST AREA REHABILITATION
STRUCTURE 2 COMFORT STATION B
LIGHTING PLAN

SHEET **EE2-2.1**

DOES SD Imperial Rev. 9/02

ORIGINAL SCALE IN INCHES FOR REDUCED PLANS 0 1 2 3

UNIT 3596
PROJECT NUMBER & PHASE 08000002291

DISREGARD PRINTS BEARING EARLIER REVISION DATES
REVISION DATES (PRELIMINARY STAGE ONLY) 12/17/09 02/18/10 04/05/10 6/24/10 10/25/10 01/28/11 11/4/11 1/27/12 8/15/13
SHEET OF

18-SEP-2013 13:40
ee2_2_01.dgn

DIST.	COUNTY	ROUTE	POST MILES TOTAL PROJECT	SHEET NO.	TOTAL SHEETS
03, 08	Sac, SBd	5, 15	23.3, R107.3	241	330

Jaswinder S Gill 08-15-13
REGISTERED ELECTRICAL ENGINEER DATE

REGISTERED PROFESSIONAL ENGINEER JASWINDER GILL No. 18551 Exp. 12-31-14 ELEC STATE OF CALIFORNIA

9-16-13
PLANS APPROVAL DATE

The State of California or its officers or agents shall not be responsible for the accuracy or completeness of electronic copies of this plan sheet.

CALIFORNIA STATE FIRE MARSHAL APPROVED
Approval of this plan does not authorize or approve any omission or deviation from applicable regulations. Final approval is subject to field inspection. One set of approved plans shall be available on the project site at all times.
Reviewed by: FRANCIS SOLICH
Approval date: 09-11-13

MAIN: 150 AMPERE, 3 POLE CB
VOLTS: 120/208 V, 3 PHASE, 4 WIRE

PANEL NLB
10K SCCR

FEEDER SIZE: 4#2/0, 1#8G
LOCATION: INSIDE IFSIB-COMFORT STATION B-MECH/ELECT ROOM

DESCRIPTION	AMPERES A	AMPERES B	AMPERES C	BRK	CKT	A B C	CKT	BRK	AMPERES A	AMPERES B	AMPERES C	DESCRIPTION
AUTOFLUSH SYSTEM-MENS	2			20/1	1		2	20/1**	13			HAND DRYER-MENS RESTROOM
AUTOFLUSH SYSTEM-WOMENS		2		20/1	3		4	20/1**		13		HAND DRYER-MENS RESTROOM
DISPLAY LIGHTS AT INTERPRETIVE CENTER			1	20/1	5		6	20/1**			13	HAND DRYER-MENS RESTROOM
SPARE	-			20/1	7		8	20/1**	13			HAND DRYER-FAMILY RESTROOM
LOW VOLTAGE CONTROL PANEL 2		1		20/1	9		10	20/1**		13		HAND DRYER-WOMENS RESTROOM
RECEPTACLES- PLUMBING CHASE			7.5	20/1*	11		12	20/1**			13	HAND DRYER-WOMENS RESTROOM
RECEPTACLE-MENS & FAMILY RESTROOM	1.5			20/1*	13		14	20/1**	13			HAND DRYER-WOMENS RESTROOM
RECEPTACLE-WOMENS RESTROOM		1.5		20/1*	15		16	20/1**		13		HAND DRYER-WOMEN RESTROOM
RECEPTACLES- ELECT/MECH ROOM			6	20/1*	17		18	20/1**			13	HAND DRYER-WOMENS RESTROOM
LIGHTING-ALL OTHER AREAS	4			20/1	19		20	30/2	-			SPARE
EXHAUST FAN-PLUMBING CHASE		4		20/1	21		22			-		
SPARE			-	20/1*	23		24	20/1			-	SPARE
INTERIOR LIGHTING CONTROL STATION-N2 (ILCS-N2)	1			20/3	25		26	20/2	-			SPARE
		9			27		28			-		
			7		29		30	20/1			-	SPARE
EXHAUST FAN-ELECT/MECH	2			20/1	31		32	20/1	-			SPARE
RECEPTACLE- WATER CHILLERS		6		20/1	33		34	20/1		-		SPARE
SPARE			1	20/1	35		36	20/1			-	SPARE
SPARE	-			20/1	37		38	60/3	-			SPARE
SPARE		-		20/1	39		40			-		
SPARE			-	20/1	41		42				-	

A	B	C	
49	62	60	TOTAL CONNECTED LOAD (AMPERES PER PHASE)

- * GFCI circuit breaker (6 milliampere).
- ** CIRCUIT BREAKER SHALL HAVE PERMANENT PROVISIONS FOR PLACEMENT OF A LOCK ON IT TO SECURE THE DEVICE IN THE OFF POSITION. THE LOCK-OUT DEVICE MUST BE PART OF THE CIRCUIT BREAKER AND/OR PANELBOARD ASSEMBLY AND MUST REMAIN IN PLACE AFTER THE PADLOCK IS REMOVED.

MAIN: 70 AMPERE, 3 POLE CB
VOLTS: 277/480 V, 3 PHASE, 4 WIRE

PANEL NHB
10K SCCR

FEEDER SIZE: 4#4/0, 1#2G
LOCATION: INSIDE IFSIB-COMFORT STATION B-MECH/ELECT ROOM

DESCRIPTION	AMPERES A	AMPERES B	AMPERES C	BRK	CKT	A B C	CKT	BRK	AMPERES A	AMPERES B	AMPERES C	DESCRIPTION
TRANSFORMER TNB	22			60/3	1		2	20/1	1			BUILDING EXTERIOR LIGHTS
		27			3		4	20/1		10		TRUCK PARKING AND SIGN LIGHT
			18		5		6	20/2			8	(E) ON/OFF RAMP LIGHTS
SPARE	X			20/3	7		8		8			
		X			9		10	20/1		8		POST TOP WALKWAY LIGHTS-NEAR TRUCK PARKING
			X		11		12	20/1			X	SPARE
SPARE	X			30/3	13		14	20/1	X			SPARE
		X			15		16	20/2		X		SPARE
			X		17		18				X	

A	B	C	
31	45	26	TOTAL CONNECTED LOAD (AMPERES PER PHASE)

THIS DRAWING ACCURATE FOR ELECTRICAL WORK ONLY

	BY	CHECKED
DESIGN	Jaswinder Gill	J. S. Sandhu
DETAILS	Ed D.Tapalla 9/09	Jaswinder Gill
QUANTITIES	Jaswinder Gill	J. S. Sandhu

STATE OF CALIFORNIA
DEPARTMENT OF TRANSPORTATION

DIVISION OF ENGINEERING SERVICES
ELECTRICAL-MECHANICAL-WATER AND WASTEWATER DESIGN

BRIDGE NO. 540004R/L
POST MILE R107.3

C. V. KANE
SAFETY ROADSIDE REST AREA REHABILITATION
STRUCTURE 2 COMFORT STATION B
PANEL SCHEDULES

SHEET EE2-3.1

DOES SD Imperial Rev. 9/02

ORIGINAL SCALE IN INCHES FOR REDUCED PLANS 0 1 2 3

UNIT 3596
PROJECT NUMBER & PHASE 08000002291

DISREGARD PRINTS BEARING EARLIER REVISION DATES →
REVISION DATES (PRELIMINARY STAGE ONLY) 12/17/09 02/18/10 04/08/10 6/24/10 10/28/10 01/28/11 11/4/11 1/23/12 8/15/13
SHEET OF

18-SEP-2013 13:41
ee2_3_01.dgn

Notes:

1. Connect Sensor Cable to flow meter on the raw water pipe riser.
2. Connect Sensor Cable to flow meter on the potable water pipe riser.
3. ¾"C, 1 People Counter control cable, as recommended by the People Counter manufacturer.
4. 1"C, 3 People Counter control cables.
5. ¾"C, 1 sensor cable (flow meter).
6. 1"C, 2 sensor cables (flow meter).
7. Low voltage control cables and power conductors as required.
8. Fiber media converter.

General Notes:

A. For Low Voltage Device Schedule, see sheet EE4-0.1.

B. For exact location of flow meters, raw water riser and potable water riser, see Mechanical and Water plans.

C. All conduits shown routed through the restrooms shall be a concealed conduit system through ceiling.

CALIFORNIA STATE FIRE MARSHAL APPROVED
Approval of this plan does not authorize or approve any omission or deviation from applicable regulations. Final approval is subject to field inspection. One set of approved plans shall be available on the project site at all times.
Reviewed by: FRANCIS SOLICH
Approval date: 09-11-13

DIST.	COUNTY	ROUTE	POST MILES TOTAL PROJECT	SHEET NO.	TOTAL SHEETS
03, 08	Sac, SBd	5, 15	23.3, R107.3	242	330

Jaswinder S Gill — 08-15-13
REGISTERED ELECTRICAL ENGINEER — DATE

REGISTERED PROFESSIONAL ENGINEER JASWINDER GILL No. 18551 Exp. 12-31-14 ELEC STATE OF CALIFORNIA

9-16-13
PLANS APPROVAL DATE

The State of California or its officers or agents shall not be responsible for the accuracy or completeness of electronic copies of this plan sheet.

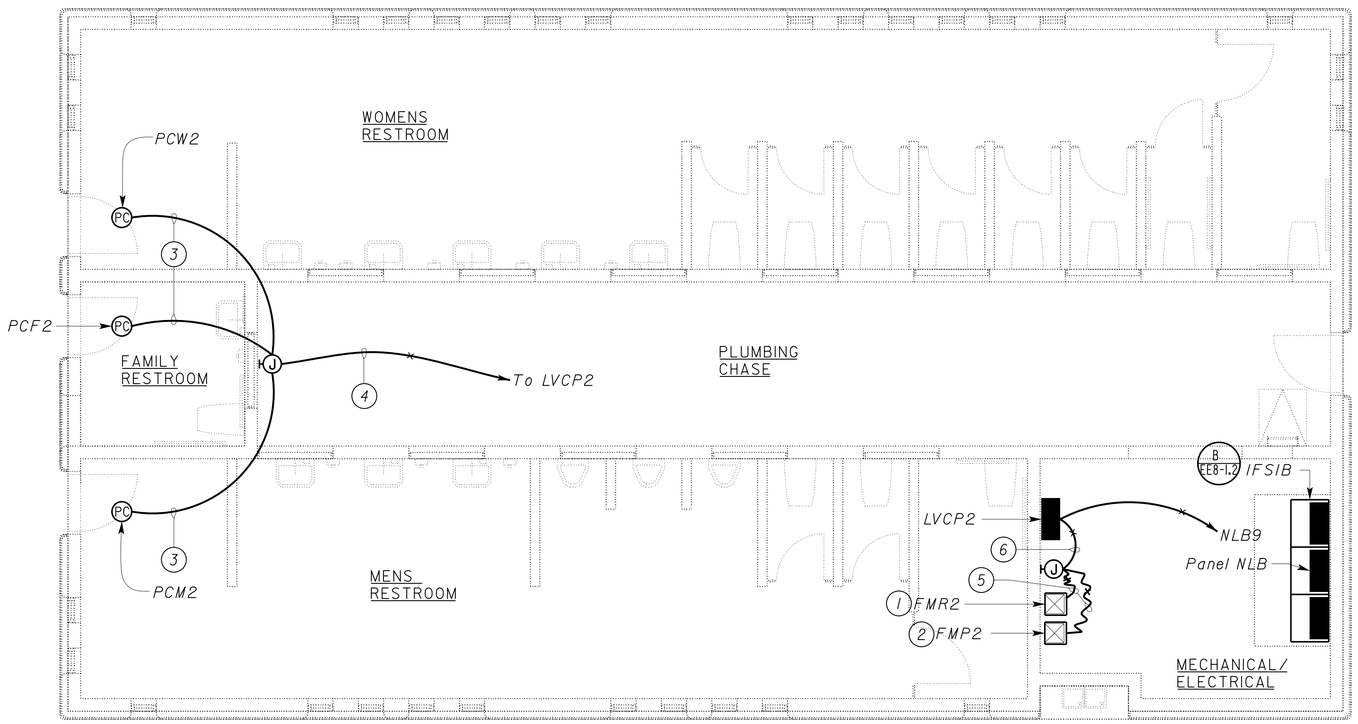

PLAN

SCALE 1/4" = 1'-0"

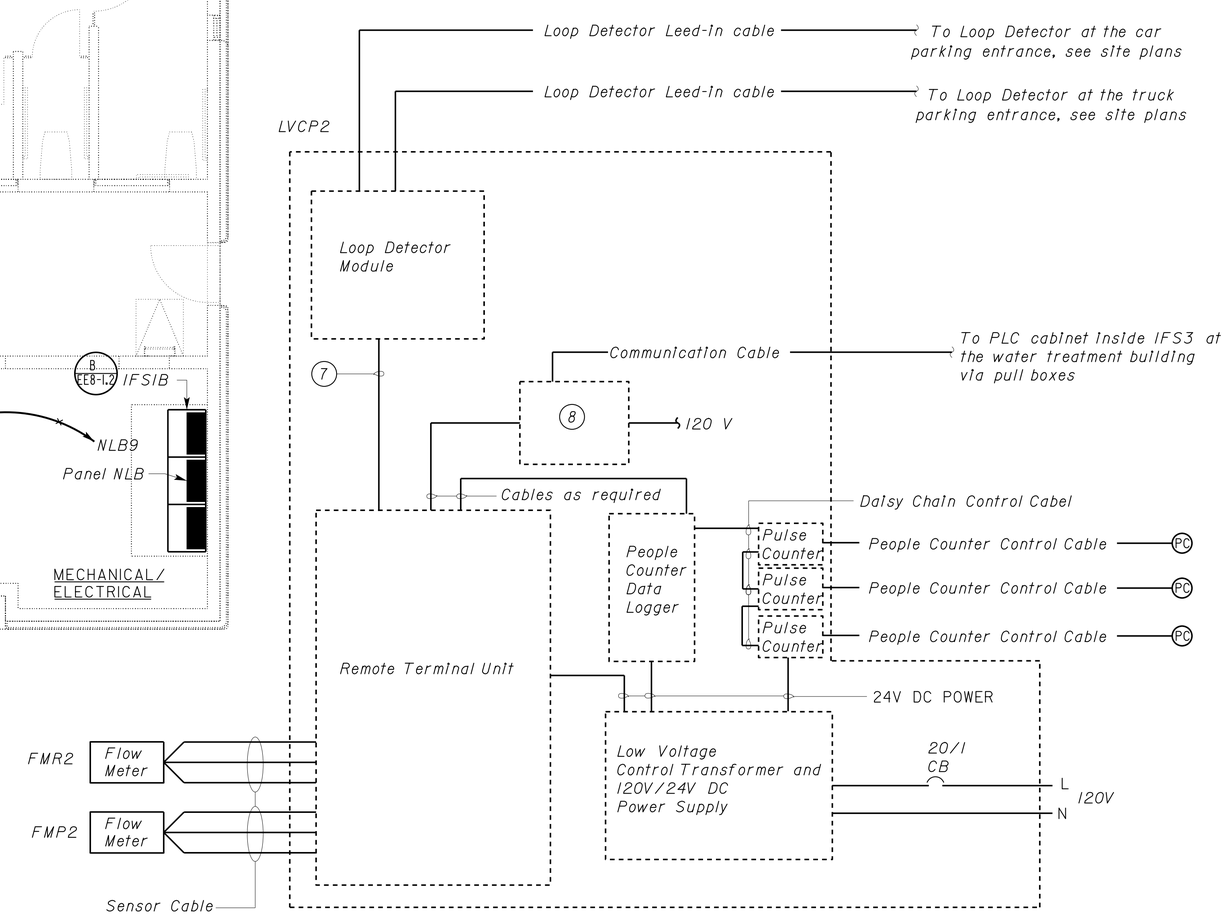

LOW VOLTAGE BLOCK DIAGRAM

THIS DRAWING ACCURATE FOR ELECTRICAL WORK ONLY

	BY	CHECKED
DESIGN	Jaswinder Gill	J. S. Sandhu
DETAILS	Ed D.Tapalla 9/09	Jaswinder Gill
QUANTITIES	Jaswinder Gill	J. S. Sandhu

STATE OF CALIFORNIA DEPARTMENT OF TRANSPORTATION

DIVISION OF ENGINEERING SERVICES
ELECTRICAL-MECHANICAL-WATER AND WASTEWATER DESIGN

UNIT 3596
PROJECT NUMBER & PHASE 08000002291

BRIDGE NO. 540004R/L
POST MILE R107.3

C. V. KANE
SAFETY ROADSIDE REST AREA REHABILITATION
STRUCTURE 2 COMFORT STATION B
LOW VOLTAGE ELECTRICAL PLANS

SHEET EE2-4.1

DOES SD Imperial Rev. 9/02

ORIGINAL SCALE IN INCHES FOR REDUCED PLANS 0 1 2 3

DISREGARD PRINTS BEARING EARLIER REVISION DATES → 12/17/09 02/18/10 04/05/10 6/24/10 10/25/10 01/28/11 11/4/11 1/27/12 8/15/13

REVISION DATES (PRELIMINARY STAGE ONLY) SHEET OF

18-SEP-2013 13:41

ee2_4_01.dgn

DIST.	COUNTY	ROUTE	POST MILES TOTAL PROJECT	SHEET NO.	TOTAL SHEETS
03, 08	Sac, SBd	5, 15	23.3, R107.3	243	330

Jaswinder S Gill 08-15-13
REGISTERED ELECTRICAL ENGINEER DATE

REGISTERED PROFESSIONAL ENGINEER JASWINDER GILL No. 18551 Exp. 12-31-14 ELEC STATE OF CALIFORNIA

9-16-13
PLANS APPROVAL DATE

The State of California or its officers or agents shall not be responsible for the accuracy or completeness of electronic copies of this plan sheet.

Notes:

1. Transducer Junction Box. See sheet EE4-4.5 and EE4-4.8 for details.
2. 1 Sensor Cable, Level Transducer (LTSP). Install cable reliefs at both ends.
3. 1 Sensor Cable, Sludge Sensor (SSSP). Install cable strain reliefs at both ends.
4. 1"C, 2 sensor cables. Level Transducer (LTSP) and Sludge Sensor (SSSP).
5. 3/4"C, 1 Sensor Cable, Level Transducer (LTLS). See Sanitry sheets for continuation.
6. 2"C, 3 communication cables
7. 1"C, 2 communication cables.
8. 1"C, PVC, 1 communication cable.
9. 1"C, 2 loop detector lead-in cables to the LVCP2 inside the Comfort Station B.
10. Sewage lift station. See Sanitary sheets for continuation.
11. Sewage Pump Control Station. For details, see sheet EE4-4.5.
12. For mounting details and exact location, see Sanitary sheet SS-3.
13. Provide concrete weights as required to hold down the level transducer and sludge sensor cables to prevent floating on the pond surface.
14. 3/4"C, 1 sensor cable, flow meter (FMLS). See Sanitary plans for details.
15. 1"C, MT.
16. Concrete foundation. See sheet EE4-4.5 for details.
17. * 1"C, 2 sensor cables.
    * 2"C, PLC Digital Input/Digital Output modules conductors/cables and 24V DC power conductors as required. See schematics for number of conductors/cables.
18. 1"C, PLC Digital Input/Digital Output modules conductors/cables and 24V DC power conductors as required. See schematics for number of conductors/cables.

CALIFORNIA STATE FIRE MARSHAL APPROVED
Approval of this plan does not authorize or approve any omission or deviation from applicable regulations. Final approval is subject to field inspection. One set of approved plans shall be available on the project site at all times.
Reviewed by: FRANCIS SOLICH
Approval date: 09-11-13

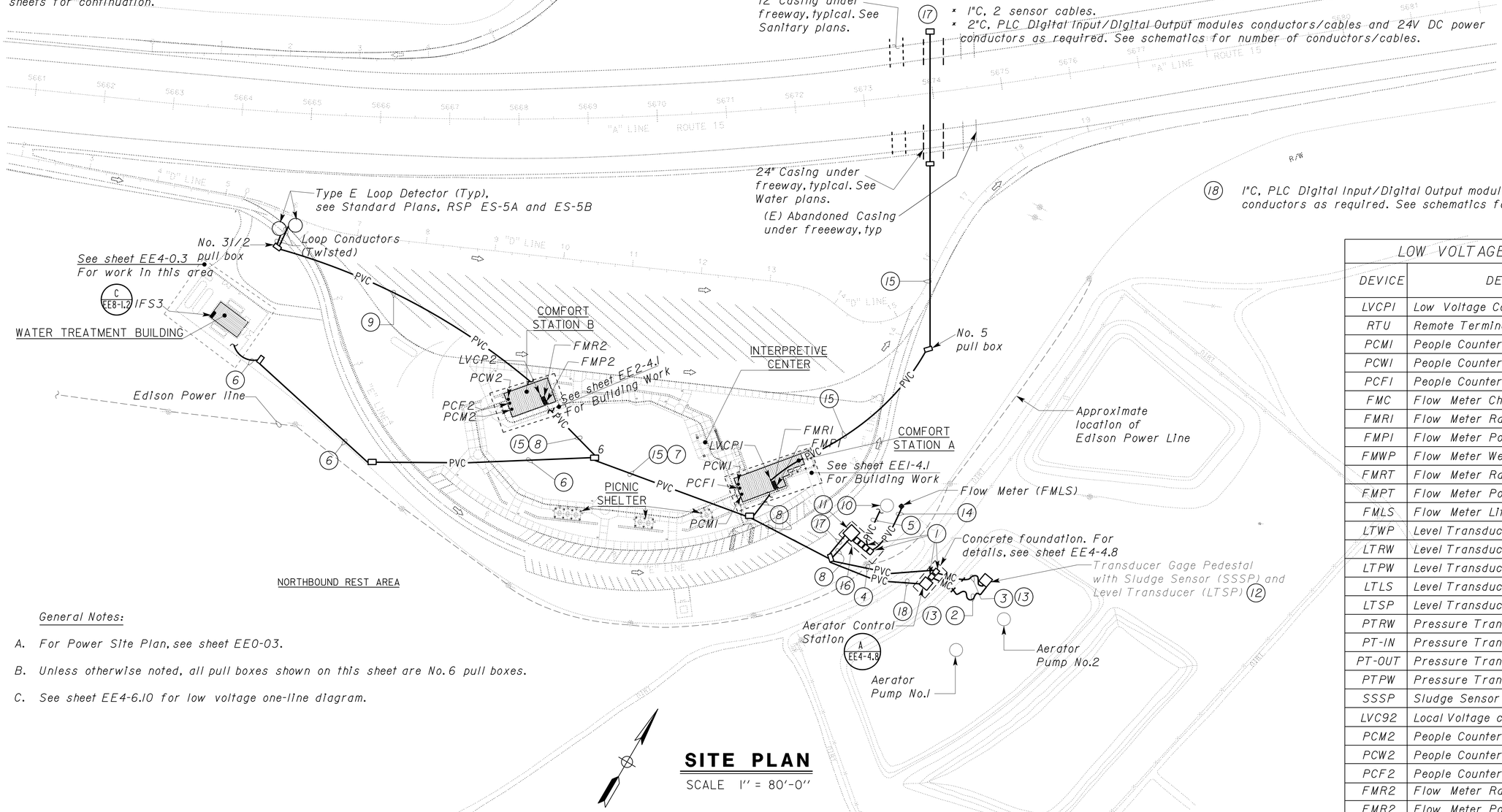

General Notes:

A. For Power Site Plan, see sheet EE0-03.

B. Unless otherwise noted, all pull boxes shown on this sheet are No. 6 pull boxes.

C. See sheet EE4-6.10 for low voltage one-line diagram.

SITE PLAN

SCALE 1" = 80'-0"

LOW VOLTAGE DEVICE SCHEDULE	
DEVICE	DESCRIPTION
LVCP1	Low Voltage Control Panel 1
RTU	Remote Terminal Unit
PCM1	People Counter Men's Restroom 1
PCW1	People Counter Women Restroom 1
PCF1	People Counter Family Restroom 1
FMC	Flow Meter Chlorinator
FMR1	Flow Meter Raw Water 1
FMP1	Flow Meter Potable Water 1
FMWP	Flow Meter Well Pump
FMRT	Flow Meter Raw Water Total
FMPT	Flow Meter Potable Water Total
FMLS	Flow Meter Lift Station
LTWP	Level Transducer Well Pump
LTRW	Level Transducer Raw Water
LTPW	Level Transducer Potable Water
LTLS	Level Transducer Lift Station
LTSP	Level Transducer Sewage Pond
PTRW	Pressure Transducer Raw Water
PT-IN	Pressure Transducer IN
PT-OUT	Pressure Transducer OUT
PTPW	Pressure Transducer Potable Water
SSSP	Sludge Sensor Sewage Pond
LVC92	Local Voltage control Panel 2
PCM2	People Counter Mens Restroom 2
PCW2	People Counter Womens Restroom 2
PCF2	People Counter Family Restroom 2
FMR2	Flow Meter Raw Water 2
FMR2	Flow Meter Potable Water 2

THIS DRAWING ACCURATE FOR ELECTRICAL WORK ONLY

	BY	CHECKED
DESIGN	Jaswinder Gill	J. S. Sandhu
DETAILS	Dali Zhou	Jaswinder Gill
QUANTITIES	Jaswinder Gill	J. S. Sandhu

STATE OF CALIFORNIA DEPARTMENT OF TRANSPORTATION

DIVISION OF ENGINEERING SERVICES
ELECTRICAL-MECHANICAL-WATER AND WASTEWATER DESIGN

BRIDGE NO. 540004R/L
POST MILE R107.3

C. V. KANE
SAFETY ROADSIDE REST AREA REHABILITATION
NORTHBOUND LOW VOLTAGE SITE PLAN

SHEET EE4-0.1

DOES SD Imperial Rev. 9/02

ORIGINAL SCALE IN INCHES FOR REDUCED PLANS 0 1 2 3

UNIT 3596
PROJECT NUMBER & PHASE 08000002291

DISREGARD PRINTS BEARING EARLIER REVISION DATES
REVISION DATES (PRELIMINARY STAGE ONLY) 12/15/09 02/18/10 04/05/10 6/14/10 10/25/10 01/28/11 11/14/11 1/31/12 8/15/13

SHEET OF

19-SEP-2013 07:51
ee4_0_01.dgn

DIST.	COUNTY	ROUTE	POST MILES TOTAL PROJECT	SHEET NO.	TOTAL SHEETS
03, 08	Sac, SBd	5, 15	23.3, R107.3	244	330

Jaswinder S Gill — REGISTERED ELECTRICAL ENGINEER — 08-15-13 DATE

REGISTERED PROFESSIONAL ENGINEER — JASWINDER GILL — No. 18551 — Exp. 12-31-14 — ELEC — STATE OF CALIFORNIA

9-16-13
PLANS APPROVAL DATE

The State of California or its officers or agents shall not be responsible for the accuracy or completeness of electronic copies of this plan sheet.

CALIFORNIA STATE FIRE MARSHAL APPROVED

Approval of this plan does not authorize or approve any omission or deviation from applicable regulations. Final approval is subject to field inspection. One set of approved plans shall be available on the project site at all times.

Reviewed by: FRANCIS SOLICH
Approval date: 09-11-13

General Notes:

A. For mounting of electrical equipment at the Well Pump Enclosure and at the Well, see sheet W-6.

B. All underground metallic conduits (MC) shown on this sheet shall be PVC coated rigid steel type conduits.

C. All sensor cables shall be per PLC and transducer/meter manufacturers requirements.

D. All conductors/cables between low voltage devices and PLC control cabinet shall be unspliced unless otherwise noted.

E. For exact location and mounting of AVC, pressure switches and pressure transducers, see Water "W" plan sheets.

F. For exact location of storage tanks openings for pumps, float switches, flow meters, pressure transducer and level transducers, see Water "W" plans.

G. All risers inside the building shall be PVC coated RSC. Touch up all damaged surfaces and joints with non-spray type touch up compound as recommended by the manufacturer.

H. For Low Voltage Device Schedule, see sheet EE4-0.1.

I. Size and install all internal wiring inside IFS3 as required.

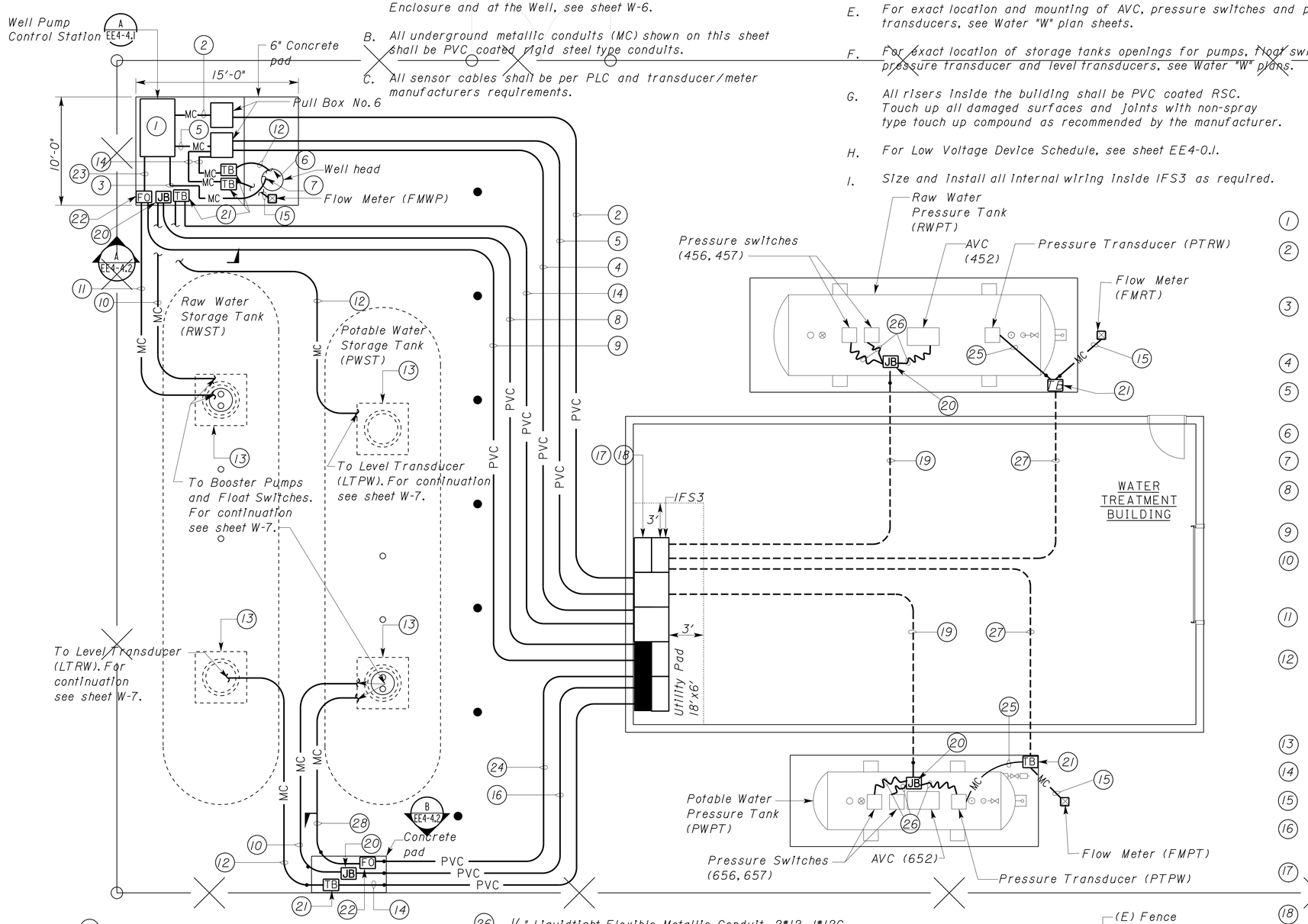

PLAN
SCALE 1" = 5'-0"

Notes:

1. For schematic diagram, see sheet EE4-5.1.
2. × 1"C, 4*8, 1*10G (WHI-3-5). × 2"C, MT with pull rope. × 1"C, Motor Saver Serial communication cable.
3. 1½"C, PVC coated RSC, Submersible cable with equipment grounding conductor, 3*12 for Electrodes and 2*12 for motor integral thermal protection. For conduit termination at Well Head, see sheet W-6.
4. 1"C, two sensor cables (LTWP, FMWP).
5. 2"C, PLC Digital Input/Digital Output modules conductors/cables and 24V DC power conductors as required. See schematics for number of conductors/cables.
6. To level Transducer Well Pump (LTWP). See sheet W-6 for continuation.
7. To Well Pump Motor and Electrodes. See sheet W-6 for continuation.
8. 2"C, 6*8, 1*10G for RWST Booster Pumps 1 & 2, 4*12 for RWST Booster Pumps 1 & 2 Integral thermal protection and 4*12 for moisture probes.
9. ¾"C, 3*12, 1*12G to RWBPCS. Conductor numbers are C505, 501 & N500.
10. 2"C, PVC coated RSC, motor cables with equipment grounding conductor. Terminate motor cables on Terminal Blocks inside NEMA 3 Weatherproof junction box.
11. 2"C, PVC coated RSC, 4 fiber optics float switch cables. See sechamatic on sheet EE4-5.4.
12. ¾"C, PVC coated RSC, 1 Sensor Cable with integral rigid breather tube to level transducer. Terminate cable and breather tube inside a cast iron NEMA 3 Weatherproof junction box as recommended by the Level Transducer manufacturer including any connectors and devices recommended by the transducer/cable manufacturer.
13. Manhole, typ. For cable and conductor mounting details, see sheet EE4-4.8.
14. ¾"C, 1 sensor cable.
15. ¾"C, PVC coated RSC, 1 Sensor Cable to flow meter.
16. 2"C, 6*8, 1*10G for PWST Booster Pumps 1 & 2, 4*12 for PWST Booster Pumps 1 & 2 Integral thermal protection and 4*12 for moisture probes.
17. Raw Water Booster Pump Control Station (RWBPCS) inside IFS3. For details, see sheet EE4-4.3. For schematic, see sheet EE4-5.2 to EE4-5.4.
18. Potable Water Booster Pump Control Station (PWBPCS) inside IFS3. For details, see sheet EE4-4.4. For schematic, see sheet EE4-5.5 to EE4-5.7.
19. ¾"C, 2*12 (for Air Volume Controller), 4*12 (Pressure Switches) and 1*12G to Panel WL and Booster Pumps Control Stations inside IFS3.
20. Weatherproof cast iron junction box with threaded hubs.
21. Transducer junction box.
22. Fiber optic float switch Junction Box.
23. 1"C, MC, 4*12, 1*12G to well pump control station, Conductor numbers are C301, 302, 303 & 304.
24. 1"C, 6*12, 1*12G to PWBPCS. Conductor numbers are C705, 701, 702, 703, 704 & N700.
25. ¾"C, 1 Sensor Cable to Pressure Transducer.
26. ½" Liquidtight Flexible Metallic Conduit, 2*12, 1*12G. Support conduit as required.
27. 1"C, 2 sensor cables. (Flow Meter and Pressure Transducer).
28. 2" PVC coated RSC, 4 fible optics float switch cables. See sechamatic on sheet EE4-5.7.

THIS DRAWING ACCURATE FOR ELECTRICAL WORK ONLY

	BY	CHECKED
DESIGN	Jaswinder Gill	J. S. Sandhu
DETAILS	Ed D.Tapalla 3/10	Jaswinder Gill
QUANTITIES	Jaswinder Gill	J. S. Sandhu

STATE OF CALIFORNIA
DEPARTMENT OF TRANSPORTATION

DIVISION OF ENGINEERING SERVICES
ELECTRICAL-MECHANICAL-WATER AND WASTEWATER DESIGN

BRIDGE NO. 540004R/L
POST MILE R107.3

C. V. KANE
SAFETY ROADSIDE REST AREA REHABILITATION
STRUCTURE 4 WATER TREATMENT
WATER TREATMENT SITE PLAN

SHEET EE4-0.3

DOES SD Imperial Rev. 9/02

ORIGINAL SCALE IN INCHES FOR REDUCED PLANS 0 1 2 3

UNIT 3596
PROJECT NUMBER & PHASE 08000002291

DISREGARD PRINTS BEARING EARLIER REVISION DATES → 3/31/10 04/05/10 6/14/10 10/25/10 01/28/11 11/4/11 1/3/12 8/15/13

REVISION DATES (PRELIMINARY STAGE ONLY) SHEET OF

18-SEP-2013 13:41
ee4_0_03.dgn

DIST.	COUNTY	ROUTE	POST MILES TOTAL PROJECT	SHEET NO.	TOTAL SHEETS
03, 08	Sac, SBd	5, 15	23.3, R107.3	245	330

CALIFORNIA STATE FIRE MARSHAL APPROVED
Approval of this plan does not authorize or approve any omission or deviation from applicable regulations. Final approval is subject to field inspection. One set of approved plans shall be available on the project site at all times.
Reviewed by: FRANCIS SOLICH
Approval date: 09-11-13

Jaswinder S Gill 08-15-13
REGISTERED ELECTRICAL ENGINEER DATE

REGISTERED PROFESSIONAL ENGINEER JASWINDER GILL No. 18551 Exp. 12-31-14 ELEC STATE OF CALIFORNIA

9-16-13
PLANS APPROVAL DATE

The State of California or its officers or agents shall not be responsible for the accuracy or completeness of electronic copies of this plan sheet.

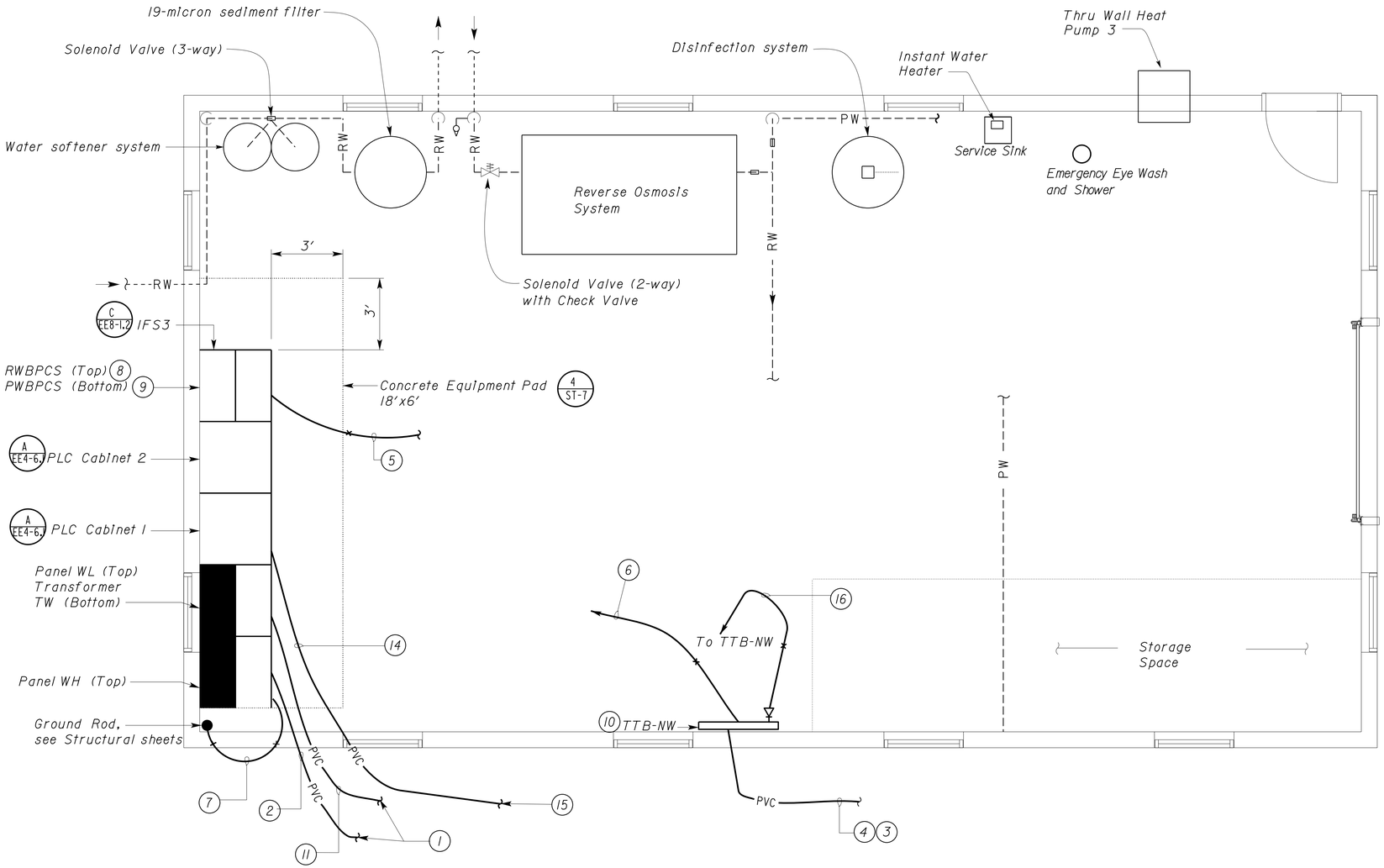

PLAN

SCALE 3/8"= 1'-0"

General Note:

A. All risers inside the building shall be PVC coated RSC. Touch up all damaged surfaces and joints with non-spray type touch up compound as recommended by the manufacturer.

Notes:

1. To pull box, for continuation, see sheet EE0-03.
2. * 3"C. 4*4/0, 1*2G.
   * 2"C, MT with pull rope.
3. To pull box, for continuation, see sheet EE0-05.
4. 1"C, 12-pair telephone cable.
5. 3/4"C, 1*2G, bond to interior cold water pipe and structural steel.
6. 3/4"C, 1*2G to ground bus inside IFS3.
7. 3/4"C, 1*2G to ground rod.
8. Raw Water Booster Pump (RWBP) Control Station inside IFS3. For details, see sheet EE4-4.3. For schematic, see sheet EE4-5.2 to EE4-5.4.
9. Potable Water Booster Pump (PWBP) Control Station inside IFS3. For details, see sheet EE4-4.4. For schematic, see sheet EE4-5.5 to EE4-5.7.
10. 4' x 8' x 3/4" exterior grade plywood. Paint plywood prior to the installation.
11. 1"C, MT (future) (WL17).
12. Not used.
13. Not used.
14. 2"C, 3 communication cables from LVCP1, LVCP2 & Sewage Pump Control Station.
15. To pull box, for continuation, see sheet EE4-0.1.
16. 3/4"C, 1 Telephone cable and 1 Data cable.

THIS DRAWING ACCURATE FOR ELECTRICAL WORK ONLY

	BY	CHECKED
DESIGN	Jaswinder Gill	J. S. Sandhu
DETAILS	Ed D.Tapalla 9/09	Jaswinder Gill
QUANTITIES	Jaswinder Gill	J. S. Sandhu

STATE OF CALIFORNIA DEPARTMENT OF TRANSPORTATION

DIVISION OF ENGINEERING SERVICES
ELECTRICAL-MECHANICAL-WATER AND WASTEWATER DESIGN

BRIDGE NO. 540004R/L
POST MILE R107.3

C. V. KANE
SAFETY ROADSIDE REST AREA REHABILITATION
STRUCTURE 4 WATER TREATMENT
PANEL LAYOUT

SHEET EE4-1.1

DOES SD Imperial Rev. 9/02

ORIGINAL SCALE IN INCHES FOR REDUCED PLANS 0 1 2 3

UNIT 3596
PROJECT NUMBER & PHASE 08000002291

DISREGARD PRINTS BEARING EARLIER REVISION DATES → 3/28/10 04/05/10 6/14/10 10/20/10 01/05/11 11/14/11 1/5/12 8/15/13

REVISION DATES (PRELIMINARY STAGE ONLY) SHEET OF

18-SEP-2013 13:41

ee4_1_01.dgn

DIST.	COUNTY	ROUTE	POST MILES TOTAL PROJECT	SHEET NO.	TOTAL SHEETS
03, 08	Sac, SBd	5, 15	23.3, R107.3	246	330

CALIFORNIA STATE FIRE MARSHAL APPROVED

Approval of this plan does not authorize or approve any omission or deviation from applicable regulations. Final approval is subject to field inspection. One set of approved plans shall be available on the project site at all times.

Reviewed by: FRANCIS SOLICH

Approval date: 09-11-13

Jaswinder S Gill — REGISTERED ELECTRICAL ENGINEER — 08-15-13 DATE

REGISTERED PROFESSIONAL ENGINEER — JASWINDER GILL — No. 18551 — Exp. 12-31-14 — ELEC — STATE OF CALIFORNIA

9-16-13
PLANS APPROVAL DATE

The State of California or its officers or agents shall not be responsible for the accuracy or completeness of electronic copies of this plan sheet.

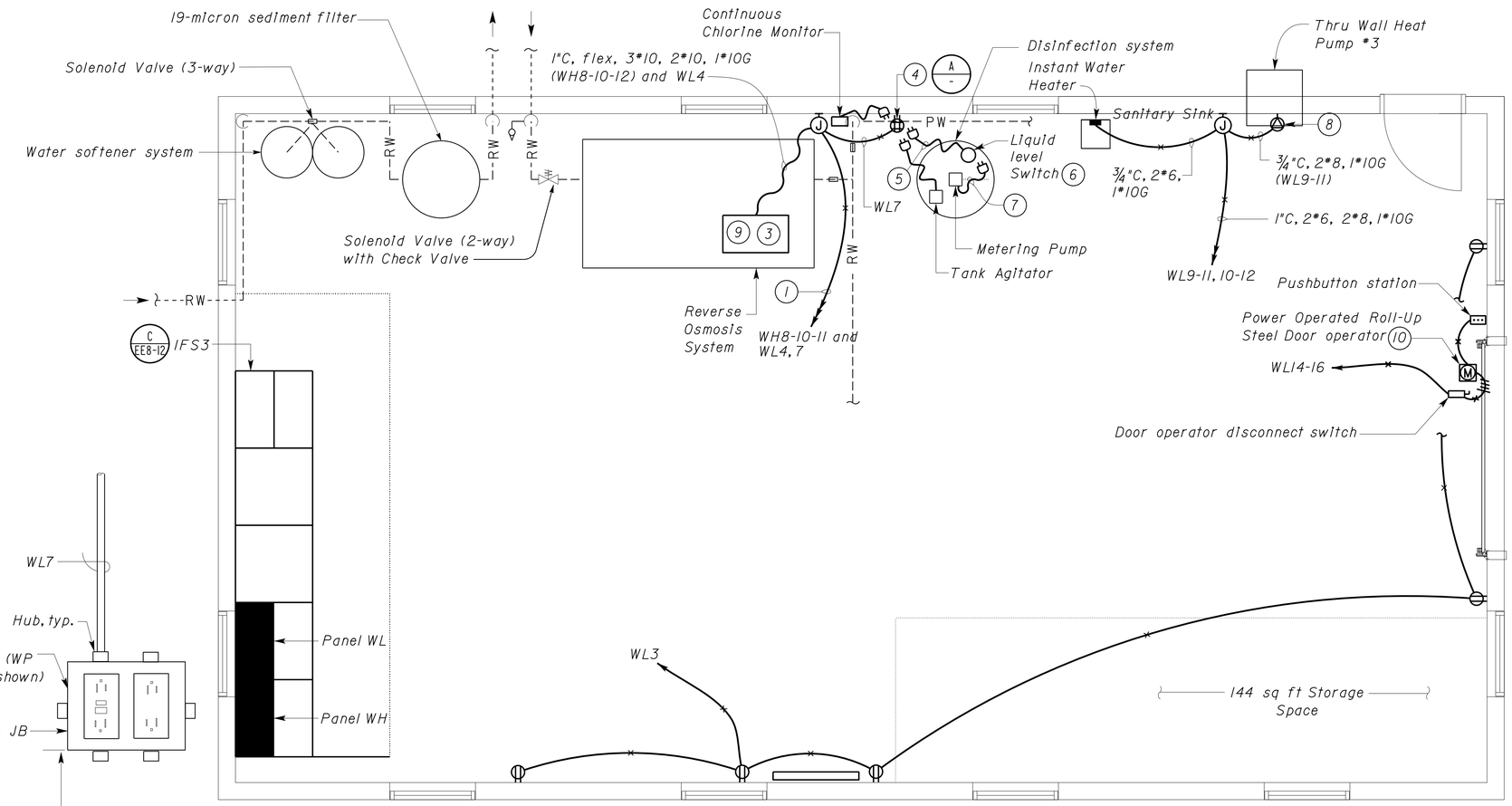

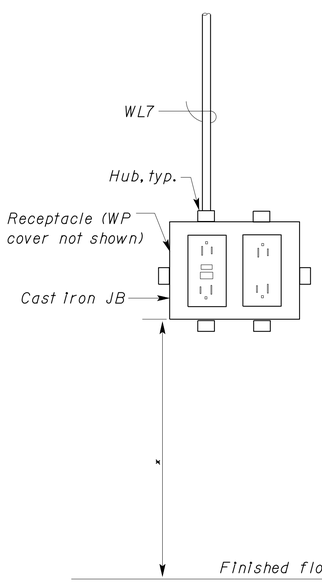

A DETAIL
NO SCALE

* Height to suit the Electronic Metering Pump.

PLAN
SCALE 1/4" = 1'-0"

General Notes:

A. For exact location of water treatment equipment's, see Water "W" plans.

B. For exact location of instant water heater and heat pump see, Mechanical plans.

C. Unless otherwise noted, all flexible conduits on this sheet are liquidtight flexible metallic conduits.

D. Unless otherwise specified, all special purpose receptacles, duplex receptacles and disinfection unit outlet shall have in-use type weatherproof covers.

Notes:

1. 1"C, 3*10, 4*12, 1*12G.
2. Not used.
3. Reverse Osmosis Control Panel mounted on Reverse Osmosis skid, provided by the Reverse Osmosis manufacturer.
4. Disinfection Unit Outlet. Location of outlet to suit furnished metering pump system.
5. Liquid level switch cord, provided by the metering pump system manufacturer.
6. Liquid level switch is part of the metering pump system.
7. Metering pump cord, provided by the metering pump system.
8. Special purpose receptacle for heat pump. Install receptacle adjacent to the unit supplied.
9. Install warning sign. "To disconnect power, disconnect following circuits at the IFS3:
   - Circuit WH8-10-12
   - Circuits WL 4
   - PLC power."
10. Install the following for the power operated roll-up steel door operator system:

    1/2" C, 3*12, 1*12G in between the power operated roll-up steel door operator and overhead door operator disconnect switch.
    1/2" C, Control conductors as required in between the power operated roll-up steel door operator and push button station.
    Junction box and flexible cable between the power operated roll-up steel door operator and safety edge limit switch.
    1/2" C, Control cables as required between the power operated roll-up steel door operator and door chain operated safety limit switch.

Safety edge limit switch and door chain operated safety limit switch are not shown for clarity. Mount power operated roll-up steel door operator isolating switch adjacent to the power operated roll-up steel door operator.

THIS DRAWING ACCURATE FOR ELECTRICAL WORK ONLY

	BY	CHECKED
DESIGN	Jaswinder Gill	J. S. Sandhu
DETAILS	Ed D.Tapalla 9/09	Jaswinder Gill
QUANTITIES	Jaswinder Gill	J. S. Sandhu

STATE OF CALIFORNIA
DEPARTMENT OF TRANSPORTATION

DIVISION OF ENGINEERING SERVICES
ELECTRICAL-MECHANICAL-WATER AND WASTEWATER DESIGN

BRIDGE NO. 540004R/L
POST MILE R107.3

C. V. KANE
SAFETY ROADSIDE REST AREA REHABILITATION
STRUCTURE 4 WATER TREATMENT
POWER PLAN

SHEET EE4-1.2

DOES SD Imperial Rev. 9/02

ORIGINAL SCALE IN INCHES FOR REDUCED PLANS 0 1 2 3

UNIT 3596
PROJECT NUMBER & PHASE 08000002291

DISREGARD PRINTS BEARING EARLIER REVISION DATES → 3/31/10 04/05/10 6/14/10 10/25/10 01/25/11 11/4/11 1/24/12 8/15/13

REVISION DATES (PRELIMINARY STAGE ONLY) SHEET OF

18-SEP-2013 13:41

ee4_1_02.dgn

DIST.	COUNTY	ROUTE	POST MILES TOTAL PROJECT	SHEET NO.	TOTAL SHEETS
03, 08	Sac, SBd	5, 15	23.3, R107.3	247	330

CALIFORNIA STATE FIRE MARSHAL APPROVED
Approval of this plan does not authorize or approve any omission or deviation from applicable regulations. Final approval is subject to field inspection. One set of approved plans shall be available on the project site at all times.
Reviewed by: FRANCIS SOLICH
Approval date: 09-11-13

Jaswinder S Gill 08-15-13
REGISTERED ELECTRICAL ENGINEER DATE

REGISTERED PROFESSIONAL ENGINEER JASWINDER GILL No. 18551 Exp. 12-31-14 ELEC STATE OF CALIFORNIA

9-16-13
PLANS APPROVAL DATE

The State of California or its officers or agents shall not be responsible for the accuracy or completeness of electronic copies of this plan sheet.

General Notes:

A. All sensor cables shall be per PLC and transducer/meter manufacturers requirements.

B. All conductors/cables between low voltage devices and PLC control cabinet shall be unspliced unless otherwise noted.

C. For exact location and mounting of pressure transducers, flow meters, metering pumps and liquid level transducers, see Water "W" plan sheets.

D. For exact location of water treatment equipments, see Water "W" plans.

E. Unless otherwise noted, all flexible conduits on this sheet are liquidtight flexible metallic conduits with fittings.

F. Unless otherwise noted, all homeruns on this sheet are to the PLC cabinets inside IFS3.

G. For Low Voltage Device Schedule, see sheet EE4-0.1.

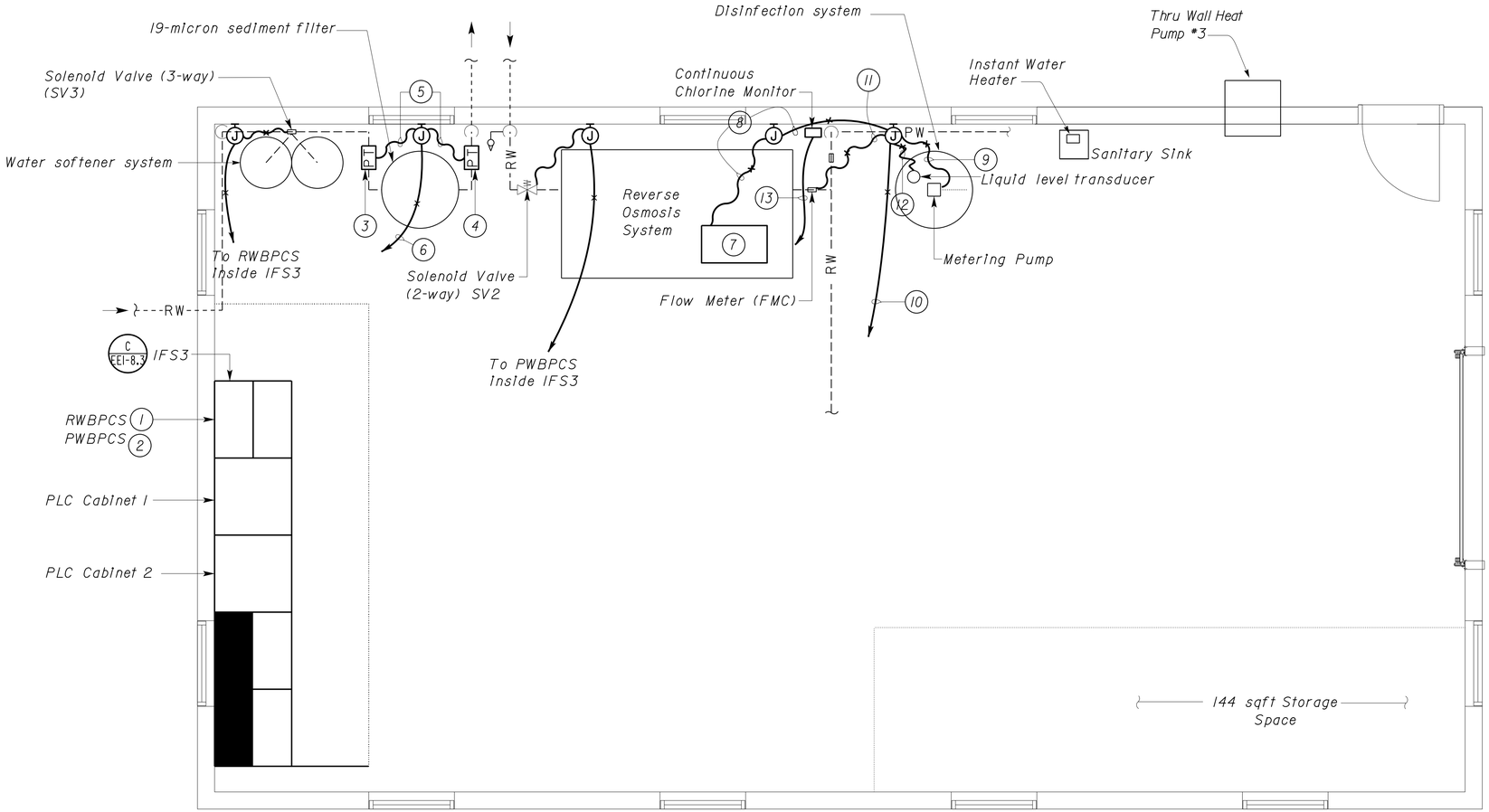

PLAN
SCALE 1/4" = 1'-0"

Notes:

1. Raw Water Booster Pump Control Station. For details, see sheet EE4-4.3 and for schematic, see sheet EE4-5.2 to EE4-5.4.
2. Potable Water Booster Pump Control Station. For details, see sheet EE4-4.4 and for schematic, see sheet EE4-5.5 to EE4-5.7.
3. Pressure Transducer IN (PT-IN).
4. Pressure Transducer OUT (PT-OUT).
5. 1/2"C, one Sensor Cable to Pressure Transducer.
6. 3/4"C, two Sensor Cables, Pressure Transducer (PT-IN and PT-OUT).
7. Reverse Osmosis Control Panel mounted on reverse osmosis skid.
8. 1"C, Reverse Osmosis Control Panel communication cable/conductors as required.
9. 1"C, one Metering Pump communication cable and one Flow Meter chlorinator Cable (FMC).
10. 1"C, one Metering Pump communication cable, sensor cable for liquid level transducer cable and Reverse Osmosis Control Panel communication cable/conductors as required.
11. 3/4"C, one Flow Meter chlorinator (FMC) cable to Metering Pump.
12. 3/4"C, 1 Sensor Cable to Liquid level transducer.
13. 3/4"C, 1 Sensor Cable to PLC cabinet.

THIS DRAWING ACCURATE FOR ELECTRICAL WORK ONLY

	BY	CHECKED
DESIGN	Jaswinder Gill	J. S. Sandhu
DETAILS	Ed D.Tapalla 9/09	Jaswinder Gill
QUANTITIES	Jaswinder Gill	J. S. Sandhu

STATE OF CALIFORNIA DEPARTMENT OF TRANSPORTATION

DIVISION OF ENGINEERING SERVICES
ELECTRICAL-MECHANICAL-WATER AND WASTEWATER DESIGN

BRIDGE NO. 540004R/L
POST MILE R107.3

C. V. KANE
SAFETY ROADSIDE REST AREA REHABILITATION
STRUCTURE 4 WATER TREATMENT
LOW VOLTAGE PLAN

SHEET EE4-1.3

DOES SD Imperial Rev. 9/02

ORIGINAL SCALE IN INCHES FOR REDUCED PLANS 0 1 2 3

UNIT 3596
PROJECT NUMBER & PHASE 08000002291

DISREGARD PRINTS BEARING EARLIER REVISION DATES
REVISION DATES (PRELIMINARY STAGE ONLY) 3/31/10 04/05/10 6/14/10 10/25/10 01/26/11 11/4/11 1/24/12 8/15/13
SHEET OF

18-SEP-2013 13:41
ee4_1_03.dgn

DIST.	COUNTY	ROUTE	POST MILES TOTAL PROJECT	SHEET NO.	TOTAL SHEETS
03, 08	Sac, SBd	5, 15	23.3, R107.3	248	330

CALIFORNIA STATE FIRE MARSHAL APPROVED

Approval of this plan does not authorize or approve any omission or deviation from applicable regulations. Final approval is subject to field inspection. One set of approved plans shall be available on the project site at all times.

Reviewed by: FRANCIS SOLICH

Approval date: 09-11-13

Jaswinder S Gill 08-15-13

REGISTERED ELECTRICAL ENGINEER — DATE

REGISTERED PROFESSIONAL ENGINEER — JASWINDER GILL — No. 18551 — Exp. 12-31-14 — ELEC — STATE OF CALIFORNIA

9-16-13

PLANS APPROVAL DATE

The State of California or its officers or agents shall not be responsible for the accuracy or completeness of electronic copies of this plan sheet.

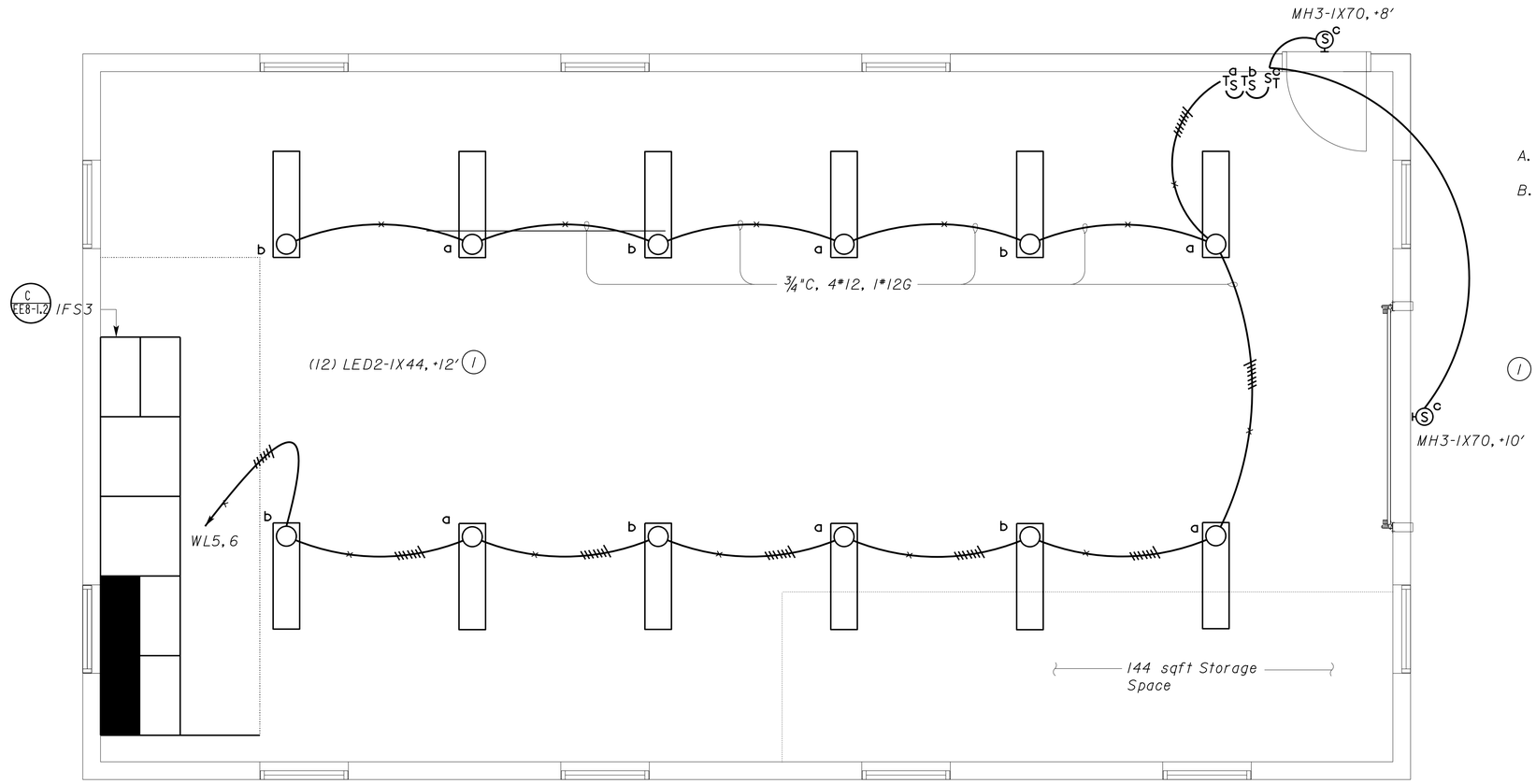

PLAN

SCALE 3/8"= 1'-0"

General Notes:

A. *For exact location of lighting fixtures, see Architectural plans.*

B. *For Lighting Fixture Schedule, see sheet EE8-1.6.*

Notes:

(1) *Support fixtures from structural beams as required. See Structural sheets for location of these beams.*

THIS DRAWING ACCURATE FOR ELECTRICAL WORK ONLY

	BY	CHECKED
DESIGN	Jaswinder Gill	J. S. Sandhu
DETAILS	Ed D.Tapalla 9/09	Jaswinder Gill
QUANTITIES	Jaswinder Gill	J. S. Sandhu

STATE OF CALIFORNIA DEPARTMENT OF TRANSPORTATION

DIVISION OF ENGINEERING SERVICES ELECTRICAL-MECHANICAL-WATER AND WASTEWATER DESIGN

BRIDGE NO. 540004R/L

POST MILE R107.3

C. V. KANE SAFETY ROADSIDE REST AREA REHABILITATION

STRUCTURE 4 WATER TREATMENT

LIGHTING PLAN

SHEET EE4-2.1

DOES SD Imperial Rev. 9/02

ORIGINAL SCALE IN INCHES FOR REDUCED PLANS 0 1 2 3

UNIT 3596

PROJECT NUMBER & PHASE 08000002291

EARLIER REVISION DATES → REVISION DATES (PRELIMINARY STAGE ONLY) 3/5/10 04/05/10 6/14/10 10/20/10 01/26/11 11/4/11 1/3/12 8/15/13

SHEET OF

18-SEP-2013 13:41

ee4_2_01.dgn

DIST.	COUNTY	ROUTE	POST MILES TOTAL PROJECT	SHEET NO.	TOTAL SHEETS
03, 08	Sac, SBd	5, 15	23.3, R107.3	249	330

Jaswinder S Gill 08-15-13
REGISTERED ELECTRICAL ENGINEER DATE

REGISTERED PROFESSIONAL ENGINEER JASWINDER GILL No. 18551 Exp. 12-31-14 ELEC STATE OF CALIFORNIA

9-16-13
PLANS APPROVAL DATE

The State of California or its officers or agents shall not be responsible for the accuracy or completeness of electronic copies of this plan sheet.

CALIFORNIA STATE FIRE MARSHAL APPROVED
Approval of this plan does not authorize or approve any omission or deviation from applicable regulations. Final approval is subject to field inspection. One set of approved plans shall be available on the project site at all times.
Reviewed by: FRANCIS SOLICH
Approval date: 09-11-13

MAIN: 100 A CIRCUIT BREAKER
VOLTS: 120/208 VOLTS, 3-PHASE, 4 WIRE

PANEL WL
10K SCCR

FEEDER SIZE: 4#2, 1#8G
LOCATION: IFS3-WATER TREATMENT BUILDING

DESCRIPTION	AMPERES A	AMPERES B	AMPERES C	BRK	CKT	A B C	CKT	BRK	AMPERES A	AMPERES B	AMPERES C	DESCRIPTION
RWBP CONTROL STATION	6			20/1**	1		2	20/1**	6			PWBP CONTROL STATION
RECEPTACLES		9		20/1*	3		4	20/1		3		RO SYSTEM CONTROL PANEL
LIGHTS A AND B			7	20/1	5		6	20/1			1	EXTERIOR LIGHT
DISINFECTION UNIT OUTLET	3			20/1	7		8	20/1	-			SPARE
HEAT PUMP		16		30/2	9		10	40/2 **		30		INSTANT WATER HEATER
			16		11		12				30	
Raw Water Pressure Tank - AVC	1			20/1	13		14	20/2 **	5			POWER OPERATED ROLL-UP STEEL DOOR OPERATOR
Potable Water Pressure Tank -AVC		1		20/1	15		16			5		
SPARE			1	20/1	17		18	20/1			X	SPARE
MAIN PLC	5			20/1	19		20	20/1	X			SPARE
HOT STANDBY PLC		1		20/1	21		22	20/1		X		SPARE
DC POWER SUPPLY 1			5	20/1	23		24	20/1			X	SPARE
DC POWER SUPPLY 2	5			20/1	25		26	20/1	X			SPARE
UPS		5		20/1	27		28	20/1		X		SPARE
SPARE			X	20/1	29		30	20/1			X	SPARE
SPACE	X				31		32		X			SPACE
SPACE		X			33		34			X		SPACE
SPACE			X		35		36				X	SPACE
SPACE	X				37		38		X			SPACE
SPACE		X			39		40			X		SPACE
SPACE			X		41		42				X	SPACE

A	B	C	
31	70	59	TOTAL CONNECTED LOAD (AMPERES PER PHASE)

* GFCI circuit breaker (6 milliampere).

** Circuit breaker shall have permanent provisions for placement of a lock on it to secure the device in the off position. The lock-out device must be part of the circuit breaker and/or panelboard assembly and must remain in place after the padlock is removed.

MAIN: 150 A CIRCUIT BREAKER
VOLTS: 277/480 V, 3 PHASE, 4 WIRE

PANEL WH
10K SCCR

FEEDER SIZE: 4#4/0, 1#2G
LOCATION: INSIDE IFS3-WATER TREATMENT BUILDING

DESCRIPTION	AMPERES A	AMPERES B	AMPERES C	BRK	CKT	A B C	CKT	BRK	AMPERES A	AMPERES B	AMPERES C	DESCRIPTION
WELL PUMP	14			30/3 **	1		2	30/3 **	15			POTABLE WATER BOOSTER PUMPS 1& 2
		14			3		4			15		
			14		5		6				15	
RAW WATER BOOSTER PUMPS 1& 2	15			30/3 **	7		8	30/3 **	14			RO SYSTEM 10 HP PUMP
		15			9		10			14		
			15		11		12				14	
SPARE	X			30/3	13		14	30/3 **	X			SPARE
		X			15		16			X		
			X		17		18				X	
SPARE	X			20/3	19		20		X			SPACE
		X			21		22			X		SPACE
			X		23		24				X	SPACE
TRANSFORMER TW	14			60/3	25		26		X			SPACE
		30			27		28			X		SPACE
			26		29		30				X	SPACE

A	B	C	
72	82	84	TOTAL CONNECTED LOAD (AMPERES PER PHASE)

THIS DRAWING ACCURATE FOR ELECTRICAL WORK ONLY

DESIGN	BY Jaswinder Gill	CHECKED J. S. Sandhu	
DETAILS	BY Ed D.Tapalla 9/09	CHECKED Jaswinder Gill	
QUANTITIES	BY Jaswinder Gill	CHECKED J. S. Sandhu	

STATE OF CALIFORNIA
DEPARTMENT OF TRANSPORTATION

DIVISION OF ENGINEERING SERVICES
ELECTRICAL-MECHANICAL-WATER AND WASTEWATER DESIGN

BRIDGE NO. 540004R/L
POST MILE R107.3

C. V. KANE
SAFETY ROADSIDE REST AREA REHABILITATION
STRUCTURE 4
WATER TREATMENT PANEL SCHEDULES

SHEET EE4-3.1

DOES SD Imperial Rev. 9/02

ORIGINAL SCALE IN INCHES FOR REDUCED PLANS 0 1 2 3

UNIT 3596
PROJECT NUMBER & PHASE 08000002291

DISREGARD PRINTS BEARING EARLIER REVISION DATES →
REVISION DATES (PRELIMINARY STAGE ONLY) 12/17/09 02/18/10 04/05/10 6/14/10 10/25/10 01/26/11 11/4/11 1/3/12 8/15/13
SHEET OF

18-SEP-2013 12:40
ee4_3_01.dgn

DIST.	COUNTY	ROUTE	POST MILES TOTAL PROJECT	SHEET NO.	TOTAL SHEETS
03, 08	Sac, SBd	5, 15	23.3, R107.3	250	330

REGISTERED ELECTRICAL ENGINEER — 08-15-13 DATE

REGISTERED PROFESSIONAL ENGINEER — JASWINDER GILL — No. 18551 — Exp. 12-31-14 — ELEC — STATE OF CALIFORNIA

9-16-13
PLANS APPROVAL DATE

The State of California or its officers or agents shall not be responsible for the accuracy or completeness of electronic copies of this plan sheet.

NAMEPLATE SCHEDULE			
TAG No.	TYPE	INSCRIPTION	LETTER HEIGHT (Inch)
1	PLATE	CT201	1/4
2	PLATE	F201	1/4
2A	PLATE	F202	1/4
3	PLATE	ST206	1/4
4	PLATE	CR201	1/4
4A	PLATE	CR201A	1/4
5	PLATE	CR202	1/4
6	PLATE	CR203	1/4
7	PLATE	CR204	1/4
8	PLATE	CR204A	1/4
9	PLATE	CR206	1/4

NAMEPLATE SCHEDULE			
TAG No.	TYPE	INSCRIPTION	LETTER HEIGHT (Inch)
10	PLATE	CR206A	1/4
11	PLATE	CR208	1/4
12	PLATE	MS206	1/4
13	PLATE	IR201	1/4
14	PLATE	CS206	1/4
15	PLATE	WELL PUMP CONTROL STATION	1/2
16	PLATE	MAIN DISCONNECT	1/4
17	PLATE	DC DISCONNECT	1/4
18	PLATE	CONTROL POWER	1/4
19	PLATE	COMMON ALARM	1/4
20	PLATE	MOTOR FAILURE	1/4

NAMEPLATE SCHEDULE			
TAG No.	TYPE	INSCRIPTION	LETTER HEIGHT (Inch)
21	PLATE	LOW WATER LEVEL WELL	1/4
22	PLATE	HIGH WATER LEVEL TANK	1/4
23	RING	RESET	1/4
24	RING	TEST	1/4
25	PLATE	PUMP CONTROL	1/4
26	PLATE	REMOTE	1/4
27	PLATE	LOCAL	1/4
28	PLATE	WELL PUMP	1/4
29	RING	AUTO-OFF-HAND	1/4
30	PLATE	PUMP RUN	1/4

* Width to fit all components

WARNING PLATE SCHEDULE		
ITEM NO.	INSCRIPTION	LETTER HEIGHT (Inch)
W1	WARNING! BEFORE SERVICING PANEL TURN "MAIN DISCONNECT" AND "DC DISCONNECT" TO OFF POSITION TO DE-ENERGIZE THE PANEL	

General Note:

A. Dimensions of enclosure shown are approximate only.

Note:

(1) Nameplate No. 15 shall be mounted on the exterior door.

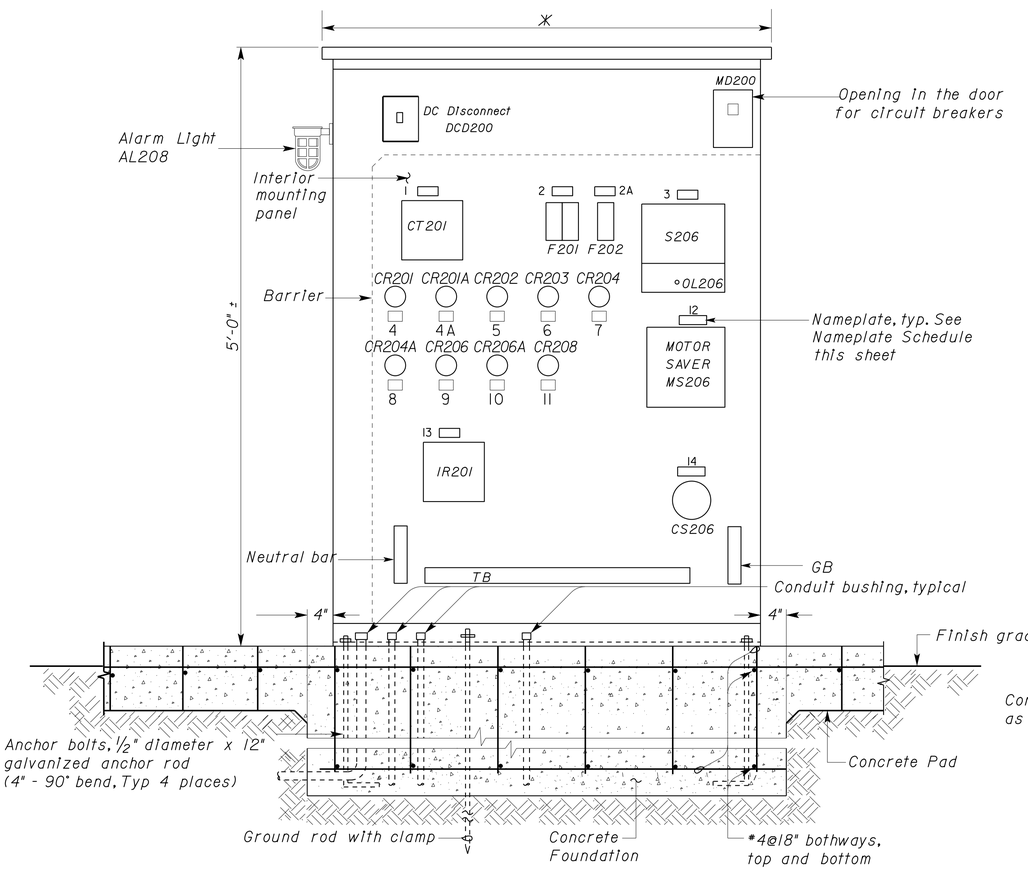

(CONTROL PANEL EXTERIOR DOOR AND INTERIOR DOOR NOT SHOWN)

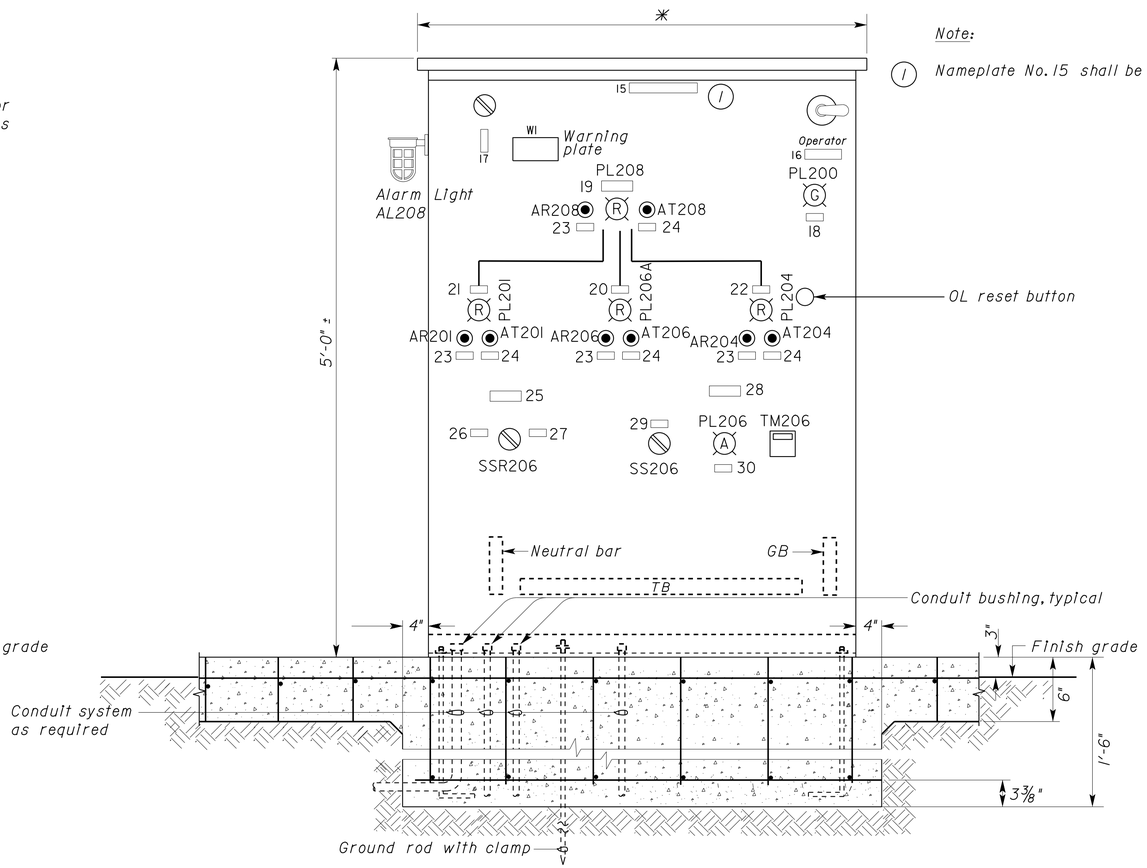

(EXTERIOR WEATHERPROOF DOOR NOT SHOWN, INTERIOR DOOR CLOSED)

CALIFORNIA STATE FIRE MARSHAL APPROVED

Approval of this plan does not authorize or approve any omission or deviation from applicable regulations. Final approval is subject to field inspection. One set of approved plans shall be available on the project site at all times.

Reviewed by: FRANCIS SOLICH
Approval date: 09-11-13

(A) WELL PUMP CONTROL STATION

NO SCALE

THIS DRAWING ACCURATE FOR ELECTRICAL WORK ONLY

	BY	CHECKED
DESIGN	Jaswinder Gill	J. S. Sandhu
DETAILS	Ed D.Tapalla 9/09	Jaswinder Gill
QUANTITIES	Jaswinder Gill	J. S. Sandhu

ORIGINAL SCALE IN INCHES FOR REDUCED PLANS 0 1 2 3

STATE OF CALIFORNIA
DEPARTMENT OF TRANSPORTATION

DIVISION OF ENGINEERING SERVICES
ELECTRICAL-MECHANICAL-WATER AND WASTEWATER DESIGN

UNIT 3596
PROJECT NUMBER & PHASE 08000002291

BRIDGE NO. 540004R/L
POST MILE R107.3

C. V. KANE
SAFETY ROADSIDE REST AREA REHABILITATION
STRUCTURE 4 WATER TREATMENT
WELL PUMP CONTROL STATION

SHEET EE4-4.1

DISREGARD PRINTS BEARING EARLIER REVISION DATES →
REVISION DATES (PRELIMINARY STAGE ONLY) 12/17/09 02/18/10 04/05/10 6/14/10 10/25/10 01/25/11 11/4/11 11/2/12 8/15/13
SHEET OF

DOES SD Imperial Rev. 9/02

18-SEP-2013 12:40

ee4_4_01.dgn

General Notes:

A. Provide screw on type laminated phenolic plastic nameplates for all the junction boxes with label as noted below.

B. Size of the junction boxes shown here is diagrammatically only. Size junction boxes as required to fit all devices for terminating the float switches, level transducers and flow meters as recommended by the manufacturers of these devices.

Note:

(1) Terminate cable and breather tube inside a NEMA 3R Weatherproof JB as recommended by the Level Transducer manufacturer including any connectors and devices recommended by the transducer/cable manufacturers for easy replacement of the level transducer in future.

CALIFORNIA STATE FIRE MARSHAL APPROVED

Approval of this plan does not authorize or approve any omission or deviation from applicable regulations. Final approval is subject to field inspection. One set of approved plans shall be available on the project site at all times.

Reviewed by: FRANCIS SOLICH

Approval date: 09-11-13

DIST.	COUNTY	ROUTE	POST MILES TOTAL PROJECT	SHEET NO.	TOTAL SHEETS
03, 08	Sac, SBd	5, 15	23.3, R107.3	251	330

Jaswinder S Gill — REGISTERED ELECTRICAL ENGINEER — 08-15-13 DATE

REGISTERED PROFESSIONAL ENGINEER — JASWINDER GILL — No. 18551 — Exp. 12-31-14 — ELEC — STATE OF CALIFORNIA

9-16-13
PLANS APPROVAL DATE

The State of California or its officers or agents shall not be responsible for the accuracy or completeness of electronic copies of this plan sheet.

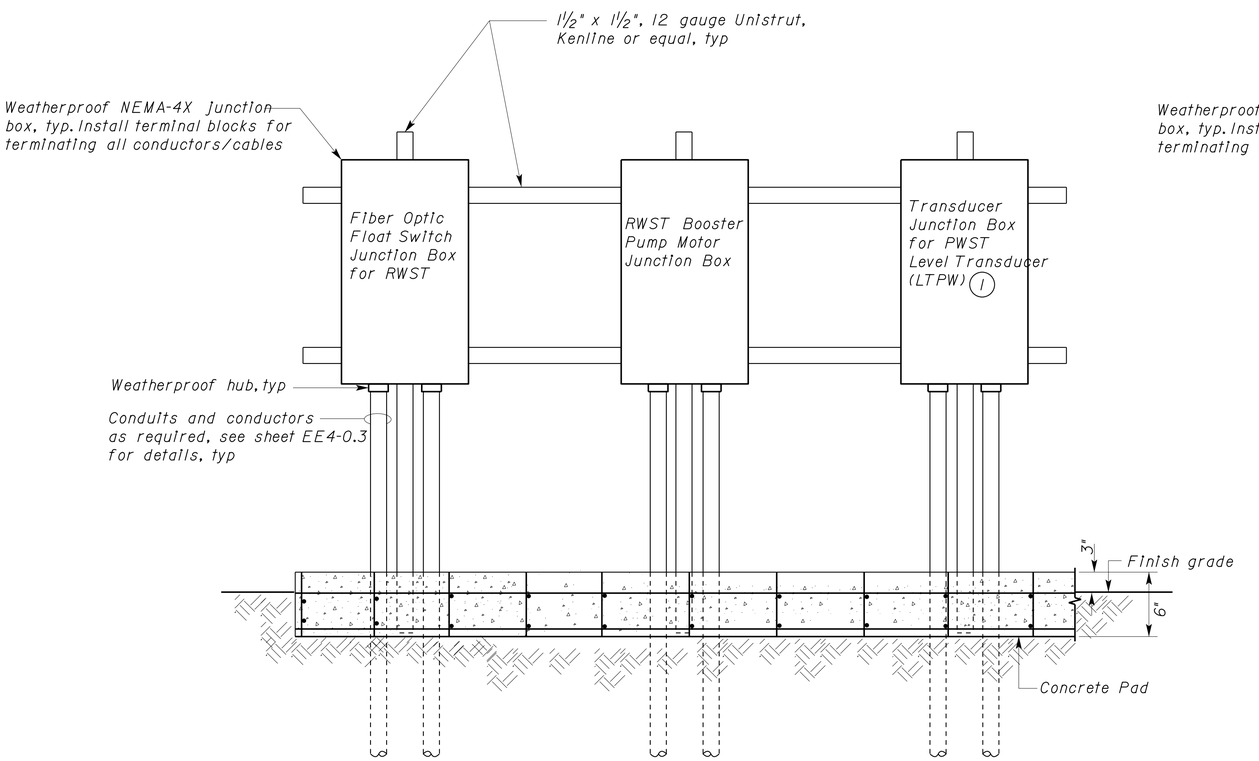

(A) ELEVATION

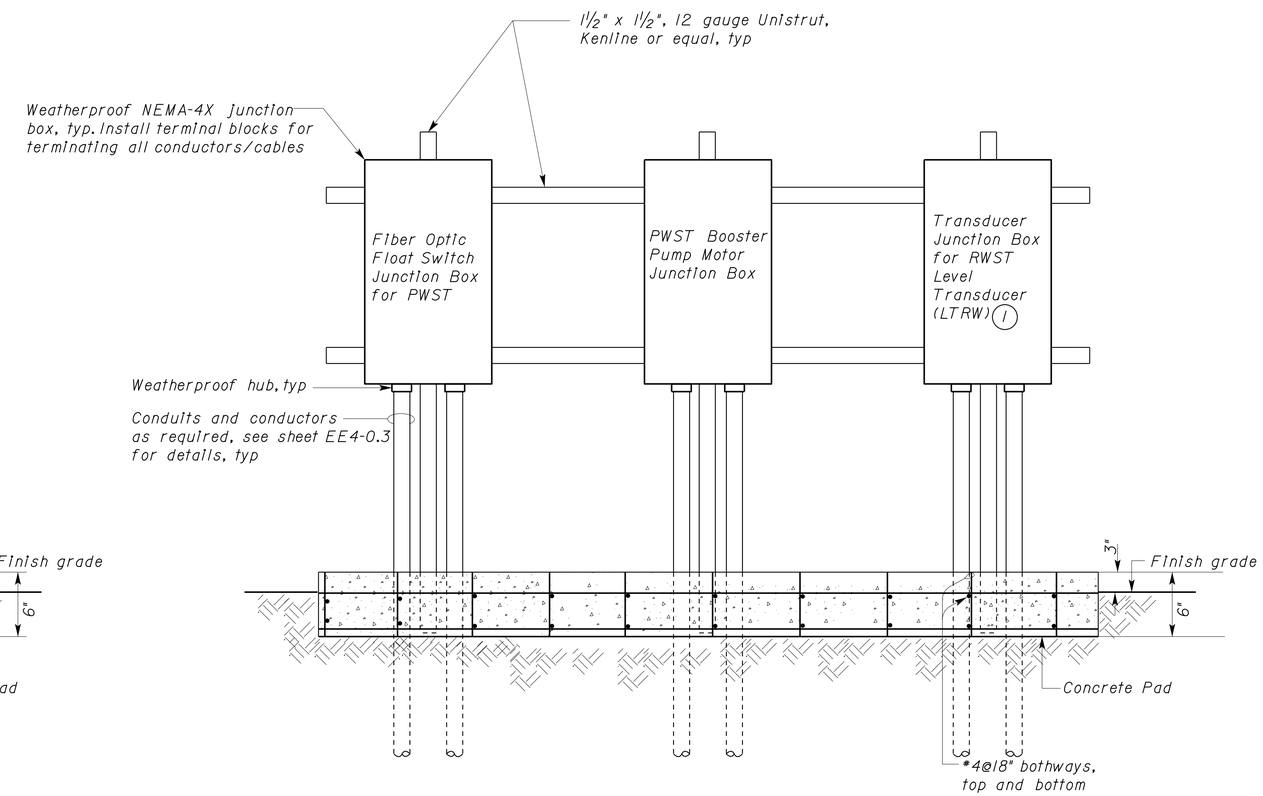

(B) ELEVATION

THIS DRAWING ACCURATE FOR ELECTRICAL WORK ONLY

	BY	CHECKED
DESIGN	Jaswinder Gill	J. S. Sandhu
DETAILS	Ed D.Tapalla 9/09	Jaswinder Gill
QUANTITIES	Jaswinder Gill	J. S. Sandhu

STATE OF CALIFORNIA DEPARTMENT OF TRANSPORTATION

DIVISION OF ENGINEERING SERVICES
ELECTRICAL-MECHANICAL-WATER AND WASTEWATER DESIGN

BRIDGE NO. 540004R/L
POST MILE R107.3

C. V. KANE
SAFETY ROADSIDE REST AREA REHABILITATION
STRUCTURE 4 WATER TREATMENT
JUNCTION BOXES ELEVATION

SHEET EE4-4.2

DOES SD Imperial Rev. 9/02

ORIGINAL SCALE IN INCHES FOR REDUCED PLANS 0 1 2 3

UNIT 3596
PROJECT NUMBER & PHASE 08000002291

DISREGARD PRINTS BEARING EARLIER REVISION DATES

REVISION DATES (PRELIMINARY STAGE ONLY) 12/17/09 02/18/10 04/05/10 6/14/10 10/25/10 01/26/11 11/4/11 1/3/12 8/15/13

SHEET OF

18-SEP-2013 12:40

ee4_4_02.dgn

DIST.	COUNTY	ROUTE	POST MILES TOTAL PROJECT	SHEET NO.	TOTAL SHEETS
03, 08	Sac, SBd	5, 15	23.3, R107.3	252	330

CALIFORNIA STATE FIRE MARSHAL APPROVED
Approval of this plan does not authorize or approve any omission or deviation from applicable regulations. Final approval is subject to field inspection. One set of approved plans shall be available on the project site at all times.
Reviewed by: FRANCIS SOLICH
Approval date: 09-11-13

Jaswinder S Gill 08-15-13
REGISTERED ELECTRICAL ENGINEER DATE

REGISTERED PROFESSIONAL ENGINEER JASWINDER GILL No. 18551 Exp. 12-31-14 ELEC STATE OF CALIFORNIA

9-16-13
PLANS APPROVAL DATE

The State of California or its officers or agents shall not be responsible for the accuracy or completeness of electronic copies of this plan sheet.

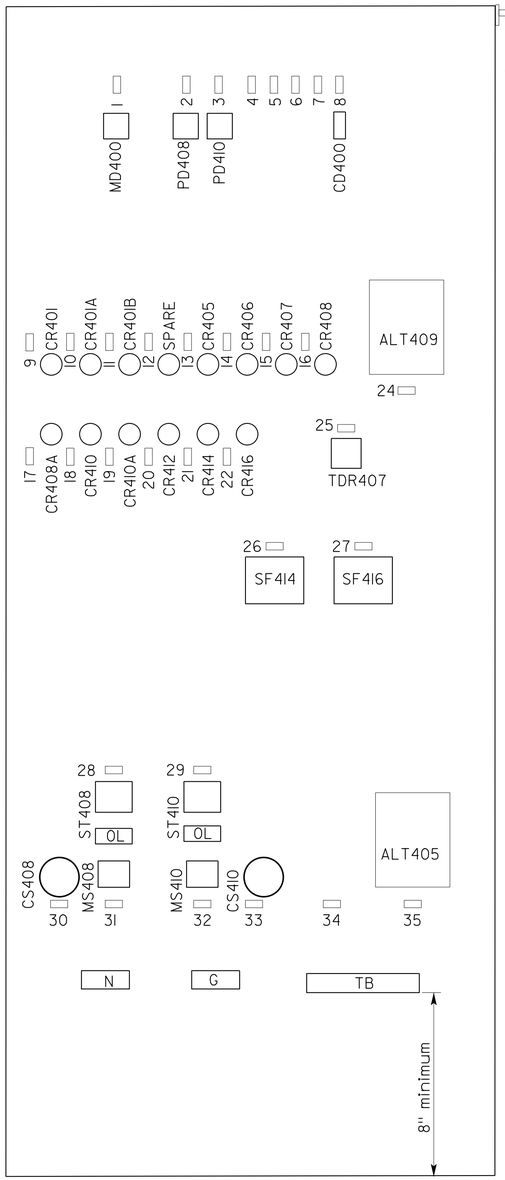

BACK MOUNTING PANEL

(Exterior Door Not Shown)

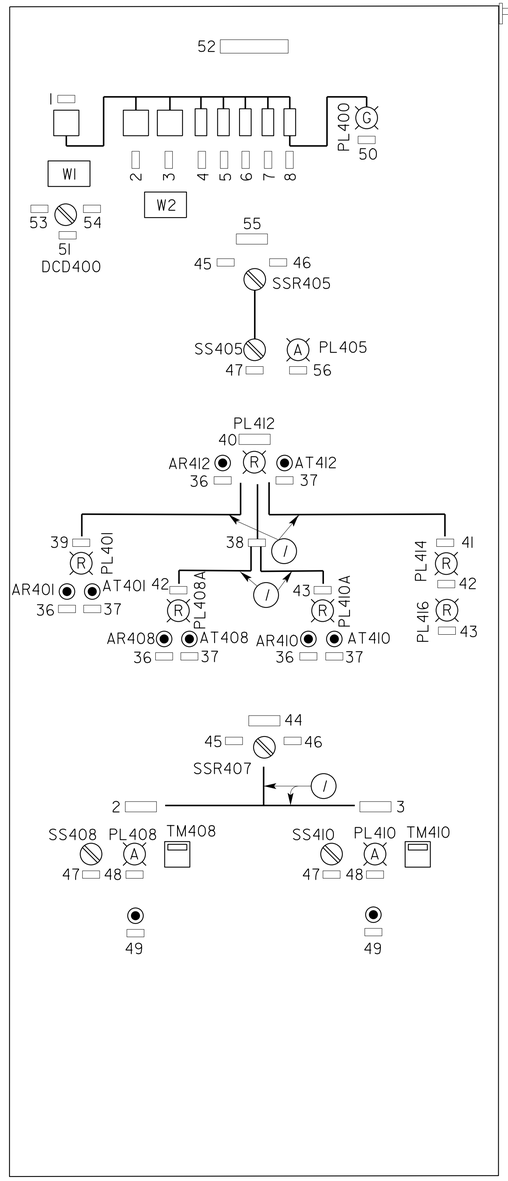

EXTERIOR HINGED DOOR

(A) RWBP CONTROL STATION

NO SCALE

General Note:

A. *Size cabinet inside IFS3 as required to fit all devices.*

Note:

(1) *Line etched on exterior hinged door to enhance control arrangement.*

NAMEPLATE SCHEDULE			
TAG No.	TYPE	INSCRIPTION	LETTER HEIGHT (Inch)
1	PLATE	MAIN DISCONNECT	1/2
2	PLATE	RWBP No. 1	1/4
3	PLATE	RWBP No. 2	1/4
4	PLATE	SPARE	1/4
5	PLATE	SPARE	1/4
6	PLATE	SPARE	1/4
7	PLATE	SPARE	1/4
8	PLATE	RWBP CONTROL DISCONNECT	1/4
9	PLATE	CR401	1/4
10	PLATE	CR401A	1/4
11	PLATE	CR401B	1/4
12	PLATE	BLANK	1/4
13	PLATE	CR405	1/4
14	PLATE	CR406	1/4
15	PLATE	CR407	1/4
16	PLATE	CR408	1/4
17	PLATE	CR408A	1/4
18	PLATE	CR410	1/4
19	PLATE	CR410A	1/4
20	PLATE	CR412	1/4
21	PLATE	CR414	1/4
22	PLATE	CR416	1/4
23	PLATE	NOT USED	1/4
24	PLATE	ALT409	1/4
25	PLATE	TDR407	1/4
26	PLATE	SF414	1/4
27	PLATE	SF416	1/4
28	PLATE	ST408	1/4

NAMEPLATE SCHEDULE			
TAG No.	TYPE	INSCRIPTION	LETTER HEIGHT (Inch)
29	PLATE	ST410	1/4
30	PLATE	CS408	1/4
31	PLATE	MS408	1/4
32	PLATE	MS410	1/4
33	PLATE	CS410	1/4
34	PLATE	BLANK	1/4
35	PLATE	ALT405	1/4
36	PLATE	RESET	1/4
37	RING	TEST	1/4
38	RING	MOTOR FAILURE	1/4
39	PLATE	LOW WATER LEVEL	1/4
40	PLATE	COMMON ALARM	1/4
41	PLATE	PUMP SEAL FAILURE	1/4
42	PLATE	PUMP 1	1/4
43	RING	PUMP 2	1/4
44	RING	PUMP CONTROL	1/4
45	PLATE	REMOTE	1/4
46	PLATE	LOCAL	1/4
47	PLATE	AUTO-OFF-HAND	1/4
48	RING	PUMP RUN	1/4
49	RING	OL RESET	1/4
50	RING	CONTROL POWER	1/4
51	PLATE	DC DISCONNECT	1/4
52	PLATE	RAW WATER STORAGE TANK	1/2
53	PLATE	ON	1/4
54	PLATE	OFF	1/4
55	PLATE	SV CONTROLS	1/4
56	RING	SV3 OPEN	1/4

WARNING PLATE SCHEDULE		
TAG No.	INSCRIPTION	LETTER HEIGHT (Inch)
W1	WARNING! BEFORE SERVICING PANEL TURN "MAIN DISCONNECT", " CONTROL DISCONNECT" AND "DC DISCONNECT" TO OFF POSITION TO DE-ENERGIZE THE PANEL	1/2
W2	CAUTION! PUMP DISCONNECT DOES NOT TURN OFF POWER TO CONTROL CIRCUIT	1/2

THIS DRAWING ACCURATE FOR ELECTRICAL WORK ONLY

	BY	CHECKED
DESIGN	Jaswinder Gill	J. S. Sandhu
DETAILS	Ed D.Tapalla 9/09	Jaswinder Gill
QUANTITIES	Jaswinder Gill	J. S. Sandhu

STATE OF CALIFORNIA
DEPARTMENT OF TRANSPORTATION

DIVISION OF ENGINEERING SERVICES
ELECTRICAL-MECHANICAL-WATER AND WASTEWATER DESIGN

BRIDGE NO. 540004R/L
POST MILE R107.3

C. V. KANE
SAFETY ROADSIDE REST AREA REHABILITATION
STRUCTURE 4 WATER TREATMENT
RAW WATER BOOSTER PUMP CONTROL STATION

SHEET EE4-4.3

DOES SD Imperial Rev. 9/02

ORIGINAL SCALE IN INCHES FOR REDUCED PLANS 0 1 2 3

UNIT 3596
PROJECT NUMBER & PHASE 08000002291

DISREGARD PRINTS BEARING EARLIER REVISION DATES
REVISION DATES (PRELIMINARY STAGE ONLY) 12/17/09 02/18/10 04/05/10 6/04/10 10/25/10 01/26/11 11/4/11 1/26/12 8/15/13
SHEET OF

18-SEP-2013 12:40
ee4_4_03.dgn

DIST.	COUNTY	ROUTE	POST MILES TOTAL PROJECT	SHEET NO.	TOTAL SHEETS
03, 08	Sac, SBd	5, 15	23.3, R107.3	253	330

CALIFORNIA STATE FIRE MARSHAL APPROVED
Approval of this plan does not authorize or approve any omission or deviation from applicable regulations. Final approval is subject to field inspection. One set of approved plans shall be available on the project site at all times.
Reviewed by: FRANCIS SOLICH
Approval date: 09-11-13

Jaswinder S Gill 08-15-13
REGISTERED ELECTRICAL ENGINEER DATE

REGISTERED PROFESSIONAL ENGINEER JASWINDER GILL No. 18551 Exp. 12-31-14 ELEC STATE OF CALIFORNIA

9-16-13
PLANS APPROVAL DATE

The State of California or its officers or agents shall not be responsible for the accuracy or completeness of electronic copies of this plan sheet.

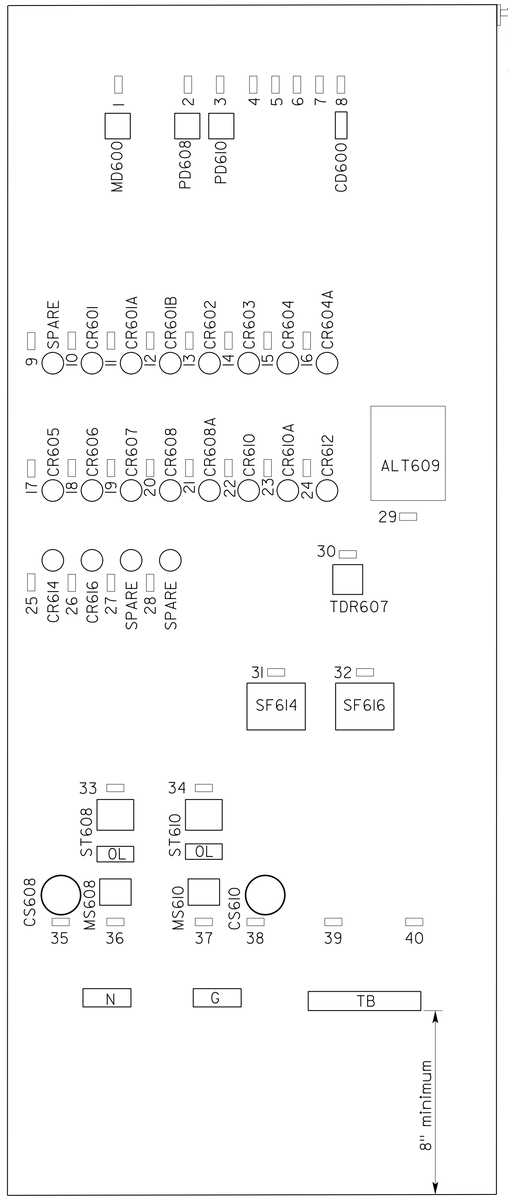

BACK MOUNTING PANEL

(Exterior Door Not Shown)

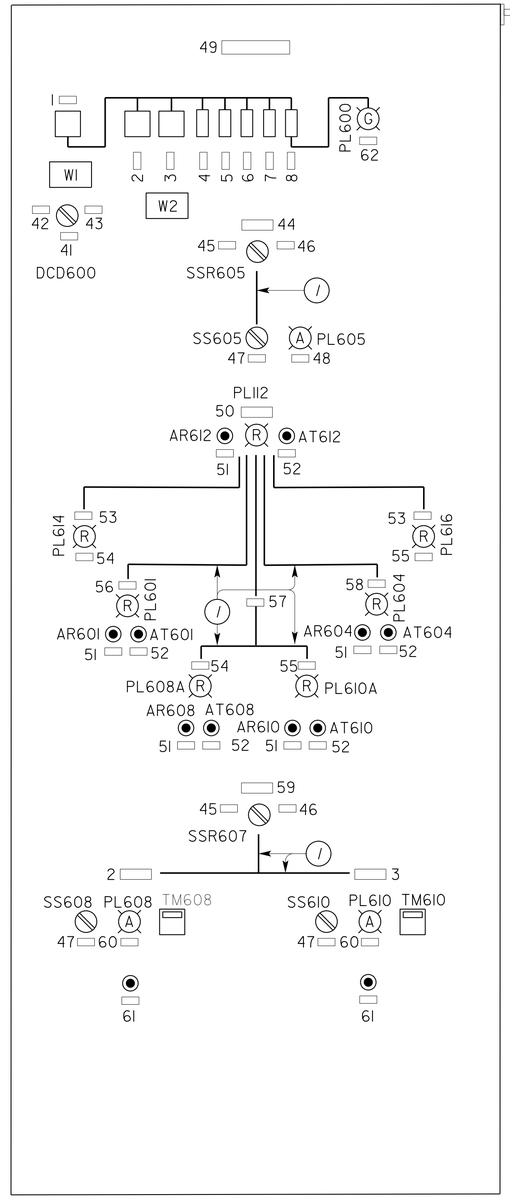

EXTERIOR HINGED DOOR

General Note:

A. *Size cabinet inside IFS3 as required to fit all devices.*

Notes:

(1) *Line etched on exterior hinged door to enhance control arrangement.*

NAMEPLATE SCHEDULE			
TAG No.	TYPE	INSCRIPTION	LETTER HEIGHT (Inch)
1	PLATE	MAIN DISCONNECT	1/4
2	PLATE	PW BOOSTER PUMP 1	1/4
3	PLATE	PW BOOSTER PUMP 2	1/4
4	PLATE	BLANK	1/4
5	PLATE	BLANK	1/4
6	PLATE	BLANK	1/4
7	PLATE	BLANK	1/4
8	PLATE	PWBP CONTROL DISCONNECT	1/4
9	PLATE	BLANK	1/4
10	PLATE	CR601	1/4
11	PLATE	CR601A	1/4
12	PLATE	CR601B	1/4
13	PLATE	CR602	1/4
14	PLATE	CR603	1/4
15	PLATE	CR604	1/4
16	PLATE	CR604A	1/4
17	PLATE	CR605	1/4
18	PLATE	CR606	1/4
19	PLATE	CR607	1/4
20	PLATE	CR608	1/4
21	PLATE	CR608A	1/4
22	PLATE	CR610	1/4
23	PLATE	CR610A	1/4
24	PLATE	CR612	1/4
25	PLATE	CR614	1/4
26	PLATE	CR616	1/4
27	PLATE	SPARE	1/4
28	PLATE	SPARE	1/4
29	PLATE	ALT609	1/4
30	PLATE	TDR607	1/4
31	PLATE	SF614	1/4

NAMEPLATE SCHEDULE			
TAG No.	TYPE	INSCRIPTION	LETTER HEIGHT (Inch)
32	PLATE	SF616	1/4
33	PLATE	ST608	1/4
34	PLATE	ST610	1/4
35	PLATE	CS608	1/4
36	PLATE	MS608	1/4
37	PLATE	MS610	1/4
38	PLATE	CS610	1/4
39	PLATE	BLANK	1/4
40	PLATE	BLANK	1/4
41	PLATE	DC DISCONNECT	1/4
42	PLATE	ON	1/4
43	PLATE	OFF	1/4
44	PLATE	SV2 CONTROL	1/4
45	PLATE	REMOTE	1/4
46	PLATE	LOCAL	1/4
47	RING	AUTO-OFF-HAND	1/4
48	RING	SV2 OPEN	1/4
49	PLATE	POTABLE WATER BOOSTER PUMPS	1/2
50	PLATE	COMMON ALARM	1/4
51	RING	RESET	1/4
52	RING	TEST	1/4
53	PLATE	PUMP SEAL FAILURE	1/4
54	RING	PUMP 1	1/4
55	RING	PUMP 2	1/4
56	PLATE	LOW WATER LEVEL	1/4
57	PLATE	MOTOR FAILURE	1/4
58	PLATE	HIGH WATER LEVEL	1/4
59	RING	PUMP CONTROL	1/4
60	RING	PUMP RUN	1/4
61	PLATE	OL RESET	1/4
62	PLATE	CONTROL POWER	1/4

WARNING PLATE SCHEDULE		
TAG No.	INSCRIPTION	LETTER HEIGHT (Inch)
W1	WARNING! BEFORE SERVICING PANEL TURN "MAIN DISCONNECT", "CONTROL DISCONNECT" AND "DC DISCONNECT" TO OFF POSITION TO DEENERGIZE THE PANEL	1/2
W2	CAUTION! PUMP DISCONNECT DOES NOT TURN OFF POWER TO CONTROL CIRCUIT	1/2

(A) PWBP CONTROL STATION

NO SCALE

THIS DRAWING ACCURATE FOR ELECTRICAL WORK ONLY

	BY	CHECKED
DESIGN	Jaswinder Gill	J. S. Sandhu
DETAILS	Ed D.Tapalla 9/09	Jaswinder Gill
QUANTITIES	Jaswinder Gill	J. S. Sandhu

STATE OF CALIFORNIA
DEPARTMENT OF TRANSPORTATION

DIVISION OF ENGINEERING SERVICES
ELECTRICAL-MECHANICAL-WATER AND WASTEWATER DESIGN

BRIDGE NO. 540004R/L
POST MILE R107.3

C. V. KANE
SAFETY ROADSIDE REST AREA REHABILITATION
STRUCTURE 4 WATER TREATMENT
POTABLE WATER BOOSTER PUMP CONTROL STATION

SHEET EE4-4.4

DOES SD Imperial Rev. 9/02

ORIGINAL SCALE IN INCHES FOR REDUCED PLANS 0 1 2 3

UNIT 3596
PROJECT NUMBER & PHASE 08000002291

DISREGARD PRINTS BEARING EARLIER REVISION DATES →
REVISION DATES (PRELIMINARY STAGE ONLY) 12/17/09 02/08/10 04/08/10 6/24/10 10/28/10 01/28/11 11/4/11 1/27/12 8/15/13
SHEET OF

18-SEP-2013 12:40
ee4_4_04.dgn

DIST.	COUNTY	ROUTE	POST MILES TOTAL PROJECT	SHEET NO.	TOTAL SHEETS
03, 08	Sac, SBd	5, 15	23.3, R107.3	254	330

Jaswinder S Gill 08-15-13
REGISTERED ELECTRICAL ENGINEER DATE

REGISTERED PROFESSIONAL ENGINEER JASWINDER GILL No. 18551 Exp. 12-31-14 ELEC STATE OF CALIFORNIA

9-16-13
PLANS APPROVAL DATE

The State of California or its officers or agents shall not be responsible for the accuracy or completeness of electronic copies of this plan sheet.

CALIFORNIA STATE FIRE MARSHAL APPROVED
Approval of this plan does not authorize or approve any omission or deviation from applicable regulations. Final approval is subject to field inspection. One set of approved plans shall be available on the project site at all times.
Reviewed by: FRANCIS SOLICH
Approval date: 09-11-13

Notes:

1. Splice fiber optic cables to fiber optic patch cords (total 10) inside weatherproof NEMA-4X junction box using approved method.
2. Size the foundation to accommodate all equipment's as shown and to maintain all required clearances as shown.
3. 1"C, 10 fiber patch cords and 2 spares. Fiber patch cords shall be same type as fiber optic float switch cables.

General Notes:

A. Size cabinet as required to fit all devices.

B. For control panel interior panel layouts, see sheet EE4-4.6 and EE4-4.7.

C. For float switch elevations, see Sanitry Plans.

D. For orientation of conduits from control panel to sump, see Sanitary Plans.

E. Provide screw on type laminated phenolic plastic nameplates for all the junction boxes with label as noted below.

F. Size of the junction boxes shown here is diagrammatically only. Size junction boxes as required to fit all devices for terminating the float switches, level transducers and flow meters as recommended by the manufacturers of these devices.

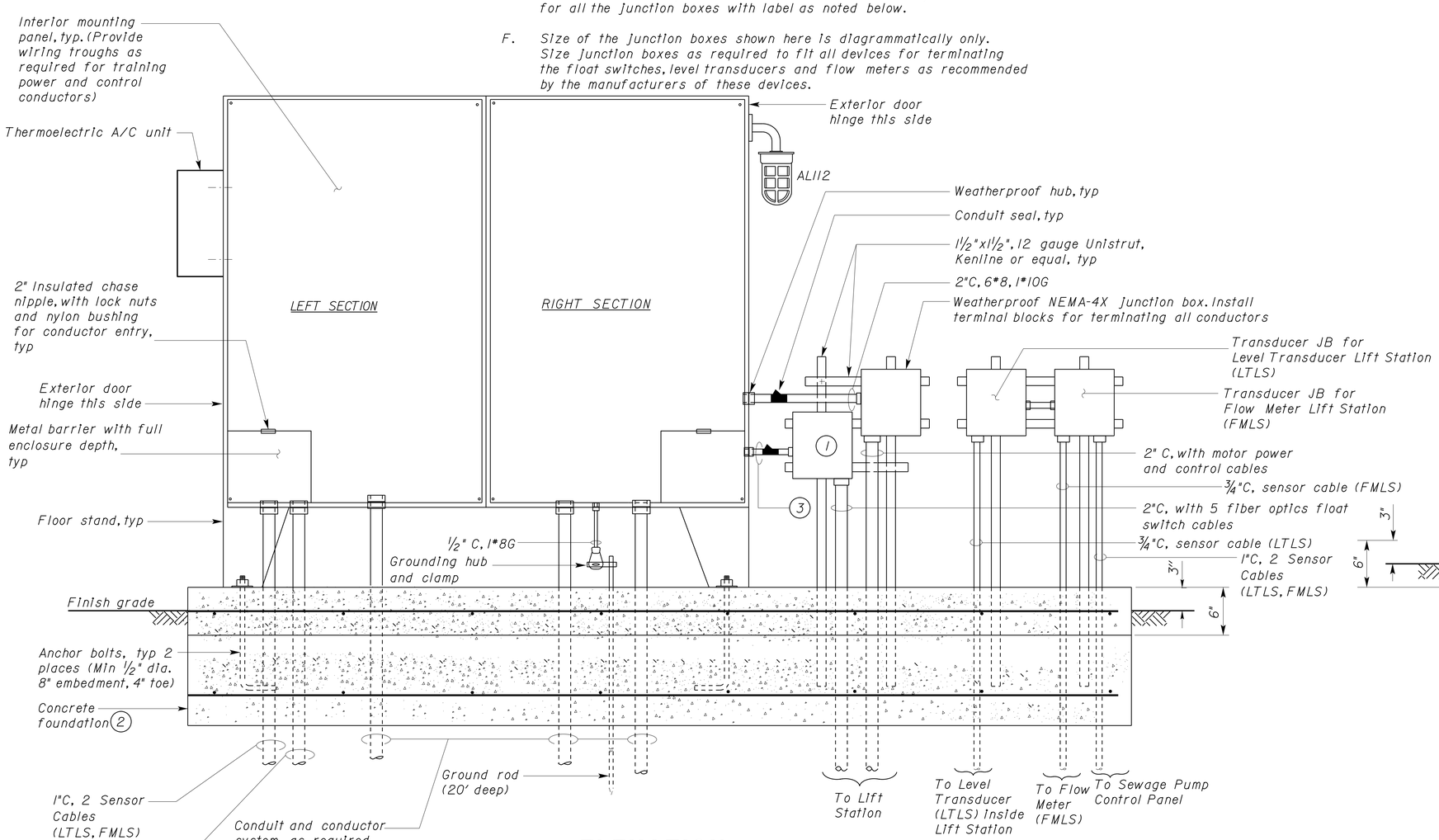

ELEVATION

NO SCALE

(CONTROL PANEL WEATHERPROOF EXTERIOR DOOR AND HINGED INTERIOR PANEL NOT SHOWN)

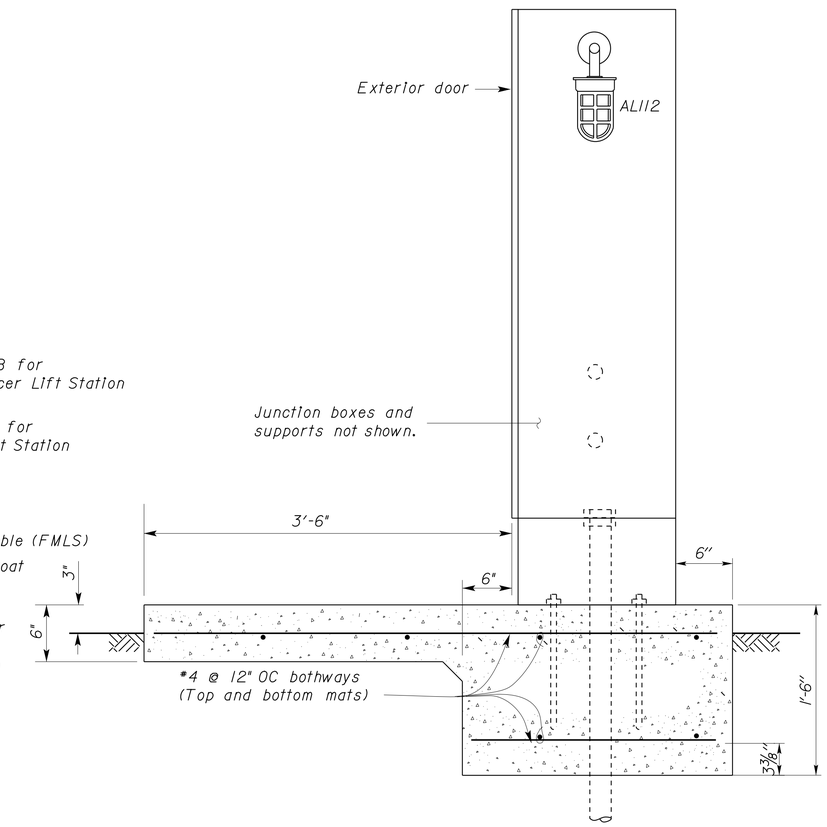

SIDE VIEW

NO SCALE

(WEATHERPROOF AND TRANSDUCER JUNCTION BOXES ARE NOT SHOWN FOR CLARITY)

SEWAGE PUMPS CONTROL STATION

THIS DRAWING ACCURATE FOR ELECTRICAL WORK ONLY

	BY	CHECKED
DESIGN	Jaswinder Gill	J. S. Sandhu
DETAILS	Ed D.Tapalla 9/09	Jaswinder Gill
QUANTITIES	Jaswinder Gill	J. S. Sandhu

STATE OF CALIFORNIA DEPARTMENT OF TRANSPORTATION

DIVISION OF ENGINEERING SERVICES ELECTRICAL-MECHANICAL-WATER AND WASTEWATER DESIGN

BRIDGE NO. 540004R/L
POST MILE R107.3

C. V. KANE SAFETY ROADSIDE REST AREA REHABILITATION
STRUCTURE 4 WATER TREATMENT
SEWAGE PUMP CONTROL STATION DETAILS 1

SHEET EE4-4.5

DOES SD Imperial Rev. 9/02

ORIGINAL SCALE IN INCHES FOR REDUCED PLANS 0 1 2 3

UNIT 3596
PROJECT NUMBER & PHASE 08000002291

DISREGARD PRINTS BEARING EARLIER REVISION DATES → 12/17/09 02/18/10 04/05/10 5/14/10 10/25/10 01/26/11 11/4/11 1/27/12 8/15/13

REVISION DATES (PRELIMINARY STAGE ONLY) SHEET OF

18-SEP-2013 12:40

ee4_4_05.dgn

DIST.	COUNTY	ROUTE	POST MILES TOTAL PROJECT	SHEET NO.	TOTAL SHEETS
03, 08	Sac, SBd	5, 15	23.3, R107.3	255	330

REGISTERED ELECTRICAL ENGINEER — 08-15-13 DATE

REGISTERED PROFESSIONAL ENGINEER — JASWINDER GILL — No. 18551 — Exp. 12-31-14 — ELEC — STATE OF CALIFORNIA

9-16-13
PLANS APPROVAL DATE

The State of California or its officers or agents shall not be responsible for the accuracy or completeness of electronic copies of this plan sheet.

CALIFORNIA STATE FIRE MARSHAL APPROVED
Approval of this plan does not authorize or approve any omission or deviation from applicable regulations. Final approval is subject to field inspection. One set of approved plans shall be available on the project site at all times.
Reviewed by: FRANCIS SOLICH
Approval date: 09-11-13

General Notes:

A. *Size cabinet as required to fit all devices.*

B. *For control panel exterior elevation and detail, see sheet EE4-4.5.*

C. *For Schematic Diagram, see sheets EE4-5.8 to EE4-5.10.*

Notes:

(1) *Line etched on hinged door to enhance control arrangement.*

(2) *Mount on exterior door.*

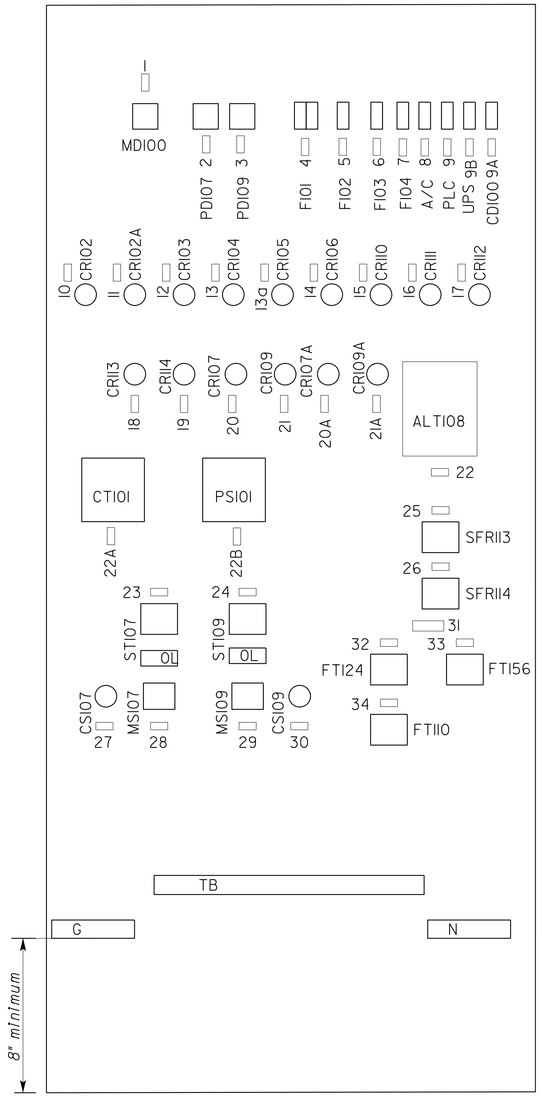

BACK MOUNTING PANEL

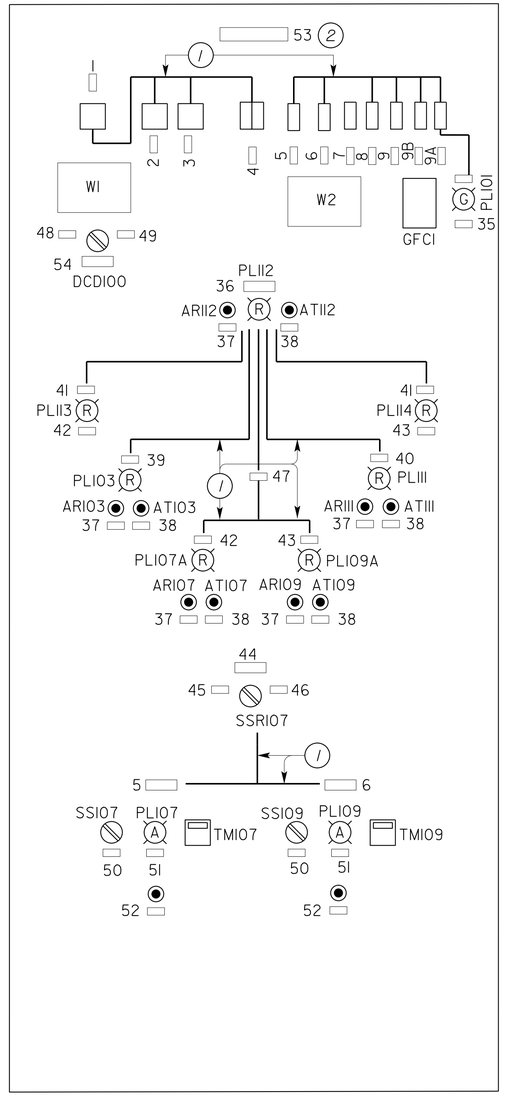

INTERIOR HINGED DOOR

(EXTERIOR WEATHERPROOF DOOR NOT SHOWN.
INTERIOR DOOR CLOSED)

PANEL LAYOUT (RIGHT SECTION)

NO SCALE

WARNNING PLATE SCHEDULE		
TAG No.	INSCRIPTION	LETTER HEIGHT (Inch)
W1	WARNING↓ BEFORE SERVICING PANEL TURN "MAIN DISCONNECT", "DC DISCONNECT" AND "ACD DISCONENCT" TO OFF POSITION TO DE-ENERGIZE THE PANEL	1/2
W2	CAUTION↓ PUMP DISCONNECT DOES NOT TURN OFF POWER TO CONTROL CIRCUIT	1/2

NAMEPLATE SCHEDULE			
TAG No.	TYPE	INSCRIPTION	LETTER HEIGHT (Inch)
1	PLATE	MAIN DISCONNECT	1/4
2	PLATE	SEWAGE PUMP 1	1/4
3	PLATE	SEWAGE PUMP 2	1/4
4	PLATE	FI01	1/4
5	PLATE	FI02	1/4
6	PLATE	FI03	1/4
7	PLATE	FI04	1/4
8	PLATE	PLC	1/4
9	PLATE	A/C	1/4
9A	PLATE	CONTROL DISCONNECT	1/4
9B	PLATE	UPS	1/4
10	PLATE	CRI02	1/4
11	PLATE	CRI02A	1/4
12	PLATE	CRI03	1/4
13	PLATE	CRI04	1/4
13a	PLATE	CRI05	1/4
14	PLATE	CRI06	1/4
15	PLATE	CRI10	1/4
16	PLATE	CRI11	1/4
17	PLATE	CRI12	1/4
18	PLATE	CRI13	1/4
19	PLATE	CRI14	1/4
20	PLATE	CRI07	1/4
20A	PLATE	CRI07A	1/4
21	PLATE	CRI09	1/4
21A	PLATE	CRI09A	1/4
22	PLATE	ALT108	1/4
22A	PLATE	CTI01	1/4
22B	PLATE	PSI01	1/4
23	PLATE	ST PUMP 1	1/4
24	PLATE	ST PUMP 2	1/4

TAG No.	TYPE	INSCRIPTION	LETTER HEIGHT (Inch)
25	PLATE	SFR 113	1/4
26	PLATE	SFR 114	1/4
27	PLATE	CSI07	1/4
28	PLATE	MSI07	1/4
29	PLATE	MSI09	1/4
30	PLATE	CSI09	1/4
31	PLATE	INTRINSICALLY SAFE BARRIER	1/4
32	PLATE	FTI24	1/4
32A	PLATE	BLANK	1/4
33	PLATE	FTI56	1/4
34	PLATE	FTI10	1/4
35	PLATE	SEWAGE CONTROL	1/4
36	PLATE	COMMON ALARM	1/4
37	RING	RESET	1/4
38	RING	TEST	1/4
39	RING	LOW LEVEL	1/4
40	RING	HIGH LEVEL	1/4
41	PLATE	PUMP SEAL FAILURE	1/4
42	RING	PUMP 1	1/4
43	RING	PUMP 2	1/4
44	PLATE	PUMP CONTROL	1/4
45	PLATE	REMOTE	1/4
46	PLATE	LOCAL	1/4
47	PLATE	MOTOR FAILURE	1/4
48	PLATE	ON	1/4
49	PLATE	OFF	1/4
50	RING	AUTO-OFF-HAND	1/4
51	RING	PUMP RUN	1/4
52	RING	OL RESET	1/4
53	PLATE	SEWAGE PUMPS CONTROL PANEL	1/2
54	PLATE	DC DISCONNECT	1/4

THIS DRAWING ACCURATE FOR ELECTRICAL WORK ONLY

	BY	CHECKED
DESIGN	Jaswinder Gill	J. S. Sandhu
DETAILS	Ed D.Tapalla 9/09	Jaswinder Gill
QUANTITIES	Jaswinder Gill	J. S. Sandhu

STATE OF CALIFORNIA
DEPARTMENT OF TRANSPORTATION

DIVISION OF ENGINEERING SERVICES
ELECTRICAL-MECHANICAL-WATER AND WASTEWATER DESIGN

BRIDGE NO. 540004R/L
POST MILE R107.3

C. V. KANE
SAFETY ROADSIDE REST AREA REHABILITATION
STRUCTURE 4 WATER TREATMENT
SEWAGE PUMP CONTROL STATION DETAILS 2

SHEET EE4-4.6

DOES SD Imperial Rev. 9/02

ORIGINAL SCALE IN INCHES FOR REDUCED PLANS 0 1 2 3

UNIT 3596
PROJECT NUMBER & PHASE 08000002291

DISREGARD PRINTS BEARING EARLIER REVISION DATES
REVISION DATES (PRELIMINARY STAGE ONLY) 12/18/09 02/18/10 04/05/10 6/04/10 10/25/10 01/26/11 11/4/11 1/27/12 8/15/13

SHEET OF

18-SEP-2013 12:40
ee4_4_06.dgn

DIST.	COUNTY	ROUTE	POST MILES TOTAL PROJECT	SHEET NO.	TOTAL SHEETS
03, 08	Sac, SBd	5, 15	23.3, R107.3	256	330

REGISTERED ELECTRICAL ENGINEER — 08-15-13 DATE

REGISTERED PROFESSIONAL ENGINEER — JASWINDER GILL — No. 18551 — Exp. 12-31-14 — ELEC — STATE OF CALIFORNIA

9-16-13
PLANS APPROVAL DATE

The State of California or its officers or agents shall not be responsible for the accuracy or completeness of electronic copies of this plan sheet.

CALIFORNIA STATE FIRE MARSHAL APPROVED

Approval of this plan does not authorize or approve any omission or deviation from applicable regulations. Final approval is subject to field inspection. One set of approved plans shall be available on the project site at all times.

Reviewed by: FRANCIS SOLICH

Approval date: 09-11-13

General Notes:

A. *Size cabinet as required to fit all devices.*

B. *For control panel exterior elevation and detail, see sheet EE4-4.5.*

C. *For Schematic Diagram, see sheets EE4-5.8 to EE4-5.10.*

D. *Layout of equipments shown here are diagrammatic only and are intended to establish basic location of the devices and equipments. Size the cabinets to fit all the installed components.*

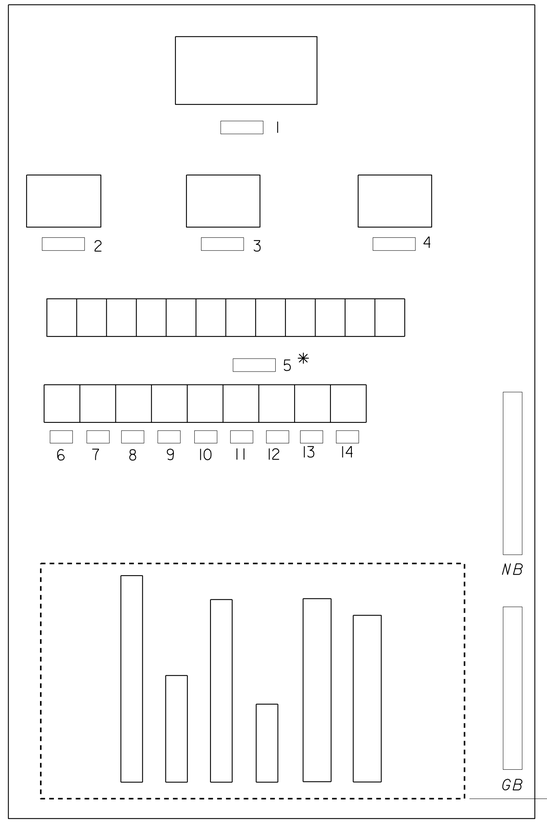

BACK MOUNTING PANEL

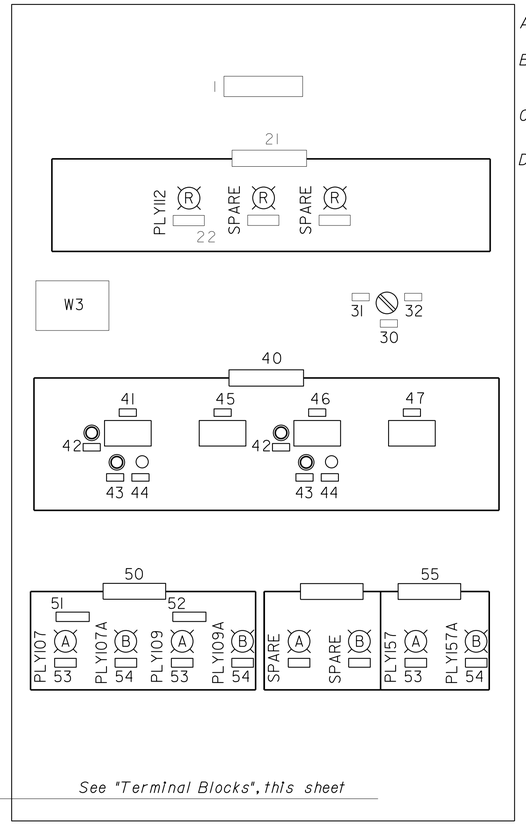

INTERIOR HINGED DOOR

(EXTERIOR WEATHERPROOF DOOR NOT SHOWN. INTERIOR DOOR CLOSED)

ITEM No.	INSCRIPTION	LETTER HEIGHT (inch)
1	PLC	1/4
2	UPS	"
3	POWER SUPPLY	"
4	FIBER OPTIC CONVERTER	"
5	INTERPHASE RELAY IR1-------IRN	"
6	LR107	"
7	RR107	"
8	LR109	"
9	RR109	"
10	CAR112	"
11	LR157	"
12	RR157	"
13	SPARE	"
14	SPARE	"

PANEL LAYOUT (LEFT SECTION)

NO SCALE

ITEM No.	INSCRIPTION	LETTER HEIGHT (inch)
52	PUMP NO. 2	1/4
53	ON	"
54	LOCAL	"
55	AERATOR PUMP	"

ITEM No.	INSCRIPTION	LETTER HEIGHT (inch)
21	ALARMS	1/4
22	SEWAGE PUMPS	"
30	AC POWER DISCONNECT(ACD)	"
31	ON	"
32	OFF	"
40	DISPLAY UNITS	"
41	SEWAGE LEVEL AT LIFT STATION	"
42	SELECTOR	"
43	TEST SWITCH	"
44	SIMULATOR	"
45	SEWAGE FLOW	"
46	SEWAGE LEVEL AT POND	"
47	SLUDGE LEVEL AT POND	"
50	SEWAGE	"
51	PUMP NO.1	"

WARNING PLATE SCHEDULE

TAG No.	INSCRIPTION	LETTER HEIGHT (Inch)
W3	WARNING! BEFORE SERVICING PANEL TURN "MAIN DISCONNECT", "DC DISCONNECT" AND "ACD DISCONENCT" TO OFF POSITION TO DE-ENERGIZE THE PANEL	

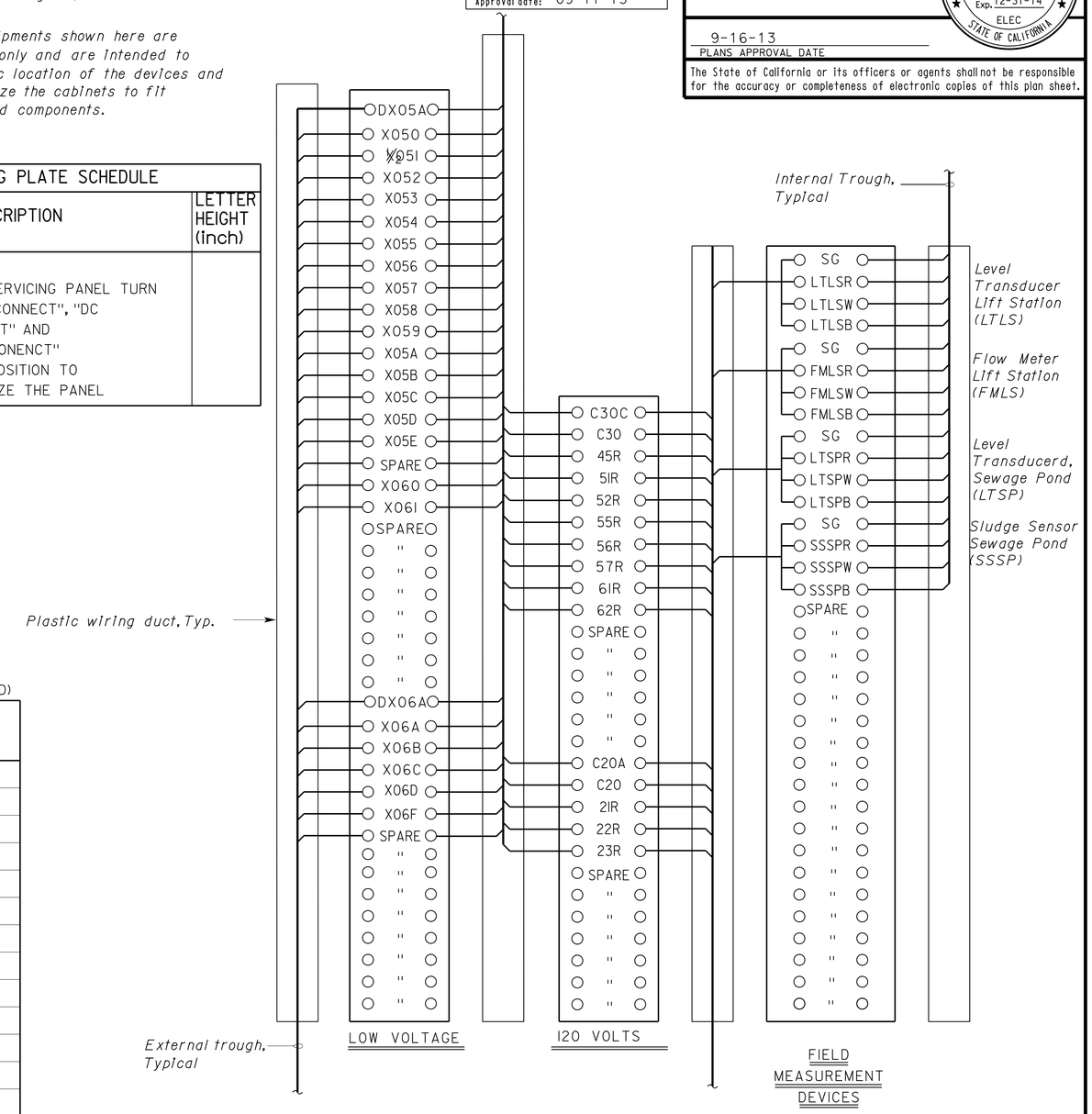

TERMINAL BLOCKS

THIS DRAWING ACCURATE FOR ELECTRICAL WORK ONLY

	BY	CHECKED
DESIGN	Jaswinder Gill	J. S. Sandhu
DETAILS	Ed D.Tapalla 9/09	Jaswinder Gill
QUANTITIES	Jaswinder Gill	J. S. Sandhu

STATE OF CALIFORNIA
DEPARTMENT OF TRANSPORTATION

DIVISION OF ENGINEERING SERVICES
ELECTRICAL-MECHANICAL-WATER AND WASTEWATER DESIGN

UNIT 3596
PROJECT NUMBER & PHASE 08000002291

BRIDGE NO. 540004R/L
POST MILE R107.3

STRUCTURE 4 WATER TREATMENT

C. V. KANE
SAFETY ROADSIDE REST AREA REHABILITATION
SEWAGE PUMP
CONTROL STATION DETAILS 3

SHEET EE4-4.7

DISREGARD PRINTS BEARING EARLIER REVISION DATES → 08-15-13

REVISION DATES (PRELIMINARY STAGE ONLY) SHEET OF

ORIGINAL SCALE IN INCHES FOR REDUCED PLANS 0 1 2 3

DOES SD Imperial Rev. 9/02

18-SEP-2013 12:40

ee4_4_07.dgn

WARNING PLATE SCHEDULE		
ITEM NO.	INSCRIPTION	LETTER HEIGHT (Inch)
W1	WARNING! BEFORE SERVICING PANEL TURN "MAIN DISCONNECT" AND "DC DISCONNECT" TO OFF POSITION TO DE-ENERGIZE THE PANEL	1/2

NAMEPLATE SCHEDULE			
ITEM NO.	TYPE	INSCRIPTION	LETTER SIZE (Inch)
1	PLATE	CT151	1/4
2	PLATE	F151	1/4
3	PLATE	ST57	1/4
3A	PLATE	ST159	1/4
4	PLATE	TIME SWITCH	1/4
5	PLATE	HEATER UNIT	1/4
5A	PLATE	HEATER UNIT	1/4
6	PLATE	CS157	1/4
6A	PLATE	CS159	1/4
7	PLATE	WELL PUMP CONTROL PANEL	1/2
7A	PLATE	PUMP DISCONNECT 1	1/4
7B	PLATE	PUMP DISCONNECT 2	1/4

NAMEPLATE SCHEDULE			
ITEM NO.	TYPE	INSCRIPTION	LETTER SIZE (Inch)
8	PLATE	MAIN DISCONNECT	1/4
9	PLATE	DC DISCONNECT	1/4
10	PLATE	CONTROL CKT.	1/4
11	PLATE	PUMP CONTROL	1/4
12	PLATE	REMOTE	1/4
13	PLATE	LOCAL	1/4
14	PLATE	AERATOR PUMPS	1/4
15	RING	AUTO-OFF-HAND	1/4
16	RING	PUMP RUN 1	1/4
17	PLATE	DISCONNECT PUMP STARTER 1	1/4
18	PLATE	DISCONNECT PUMP STARTER 2	1/4
19	PLATE	SLUDGE PROCESSOR UNIT	1/4
20	PLATE	PUMP RUN 2	1/4

CALIFORNIA STATE FIRE MARSHAL APPROVED
Approval of this plan does not authorize or approve any omission or deviation from applicable regulations. Final approval is subject to field inspection. One set of approved plans shall be available on the project site at all times.
Reviewed by: FRANCIS SOLICH
Approval date: 09-11-13

DIST.	COUNTY	ROUTE	POST MILES TOTAL PROJECT	SHEET NO.	TOTAL SHEETS
03, 08	Sac, SBd	5, 15	23.3, R107.3	257	330

Jaswinder S Gill 08-15-13
REGISTERED ELECTRICAL ENGINEER DATE

REGISTERED PROFESSIONAL ENGINEER JASWINDER GILL No. 18551 Exp. 12-31-14 ELEC STATE OF CALIFORNIA

9-16-13
PLANS APPROVAL DATE

The State of California or its officers or agents shall not be responsible for the accuracy or completeness of electronic copies of this plan sheet.

General Notes:

A. *For conduits and conductor sizes and quantity, see plans.*

B. *For Schematic Diagram, see sheet EE4-5.11.*

C. *Provide screw on type laminated phenolic plastic nameplates for all the junction boxes with label as noted below.*

D. *Size of the junction boxes shown here is diagrammatically only. Size junction boxes as required to fit all devices for terminating the level transducers and sludge sensor as recommended by the manufacturers of these devices.*

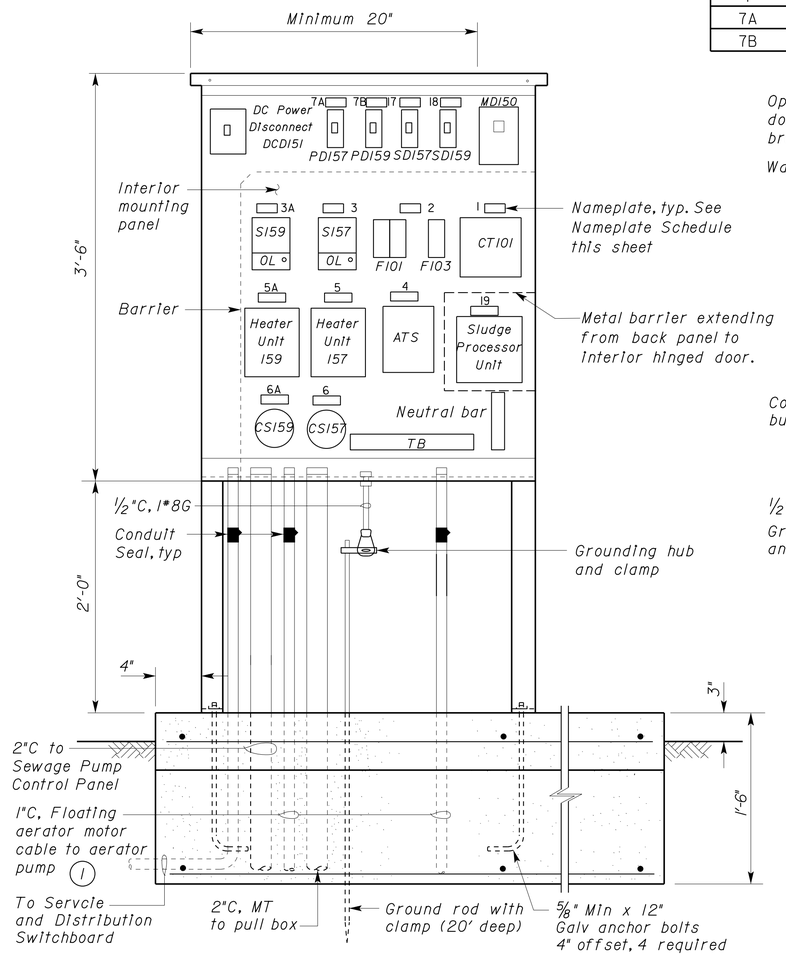

(CONTROL PANEL WEATHERPROOF EXTERIOR DOOR AND HINGED INTERIOR PANEL NOT SHOWN)

(Sludge Sensor Sewage Pond & Level Transducer Sewage Pond JB are not shown here for clarity)

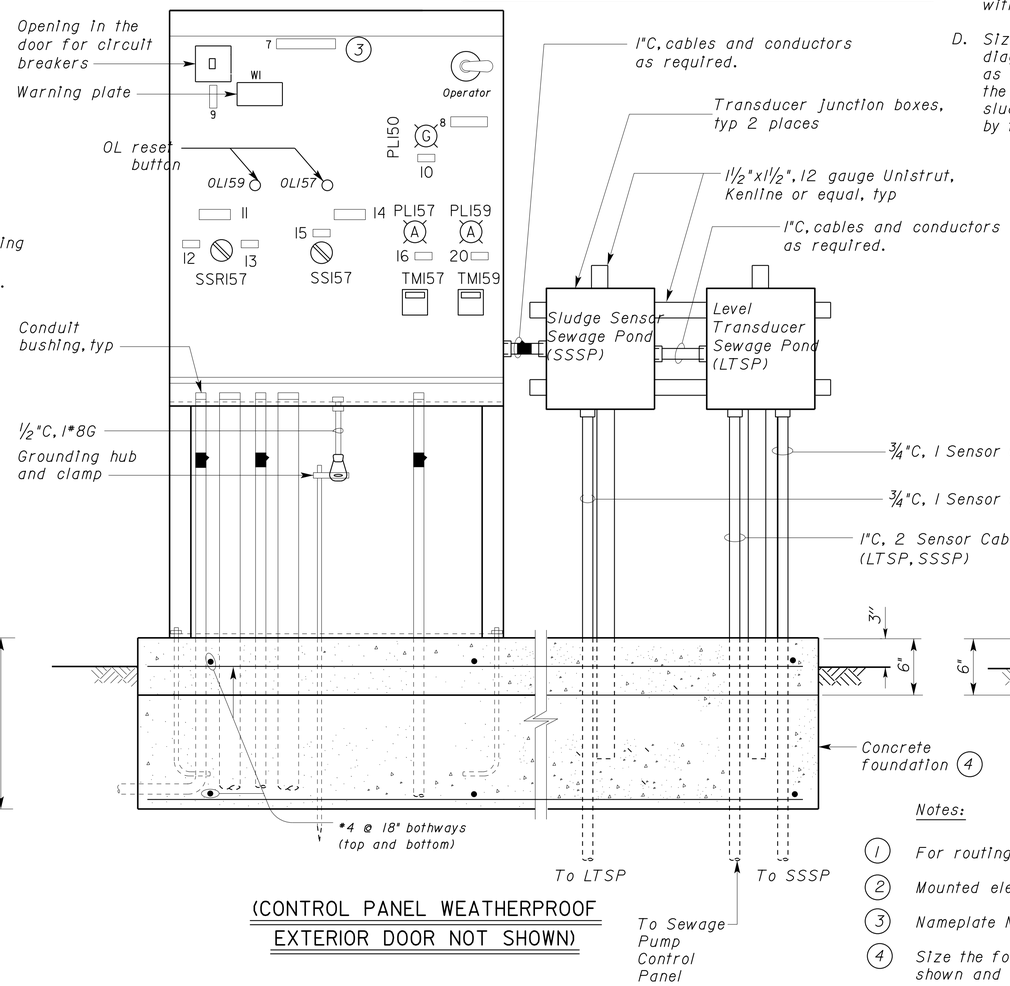

(CONTROL PANEL WEATHERPROOF EXTERIOR DOOR NOT SHOWN)

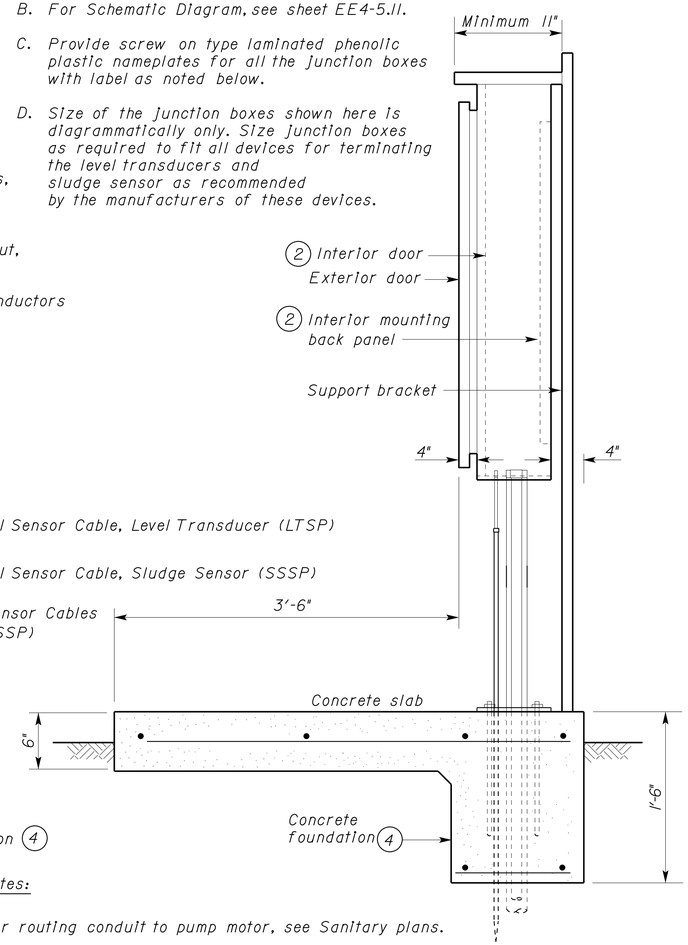

SIDE VIEW
NO SCALE

Notes:

(1) *For routing conduit to pump motor, see Sanitary plans.*

(2) *Mounted electrical components are not shown.*

(3) *Nameplate No.7 shall be mounted on the exterior door.*

(4) *Size the foundation to accommodate all equipments as shown and to maintain all required clearances as shown.*

AERATOR PUMPS CONTROL STATION

NO SCALE

THIS DRAWING ACCURATE FOR ELECTRICAL WORK ONLY

	BY	CHECKED
DESIGN	Jaswinder Gill	J. S. Sandhu
DETAILS	Ed D.Tapalla 9/09	Jaswinder Gill
QUANTITIES	Jaswinder Gill	J. S. Sandhu

STATE OF CALIFORNIA DEPARTMENT OF TRANSPORTATION

DIVISION OF ENGINEERING SERVICES ELECTRICAL-MECHANICAL-WATER AND WASTEWATER DESIGN

BRIDGE NO. 540004R/L
POST MILE R107.3

C. V. KANE SAFETY ROADSIDE REST AREA REHABILITATION
STRUCTURE 4 WATER TREATMENT
AERATOR PUMPS CONTROL STATION

SHEET EE4-4.8

DOES SD Imperial Rev. 9/02

ORIGINAL SCALE IN INCHES FOR REDUCED PLANS 0 1 2 3

UNIT 3596
PROJECT NUMBER & PHASE 08000002291

DISREGARD PRINTS BEARING EARLIER REVISION DATES → 02/17/09 02/18/10 04/05/10 6/14/10 10/25/10 01/25/11 11/4/11 1/27/12 8/15/13

REVISION DATES (PRELIMINARY STAGE ONLY) SHEET OF

18-SEP-2013 12:40

ee4_4_08.dgn

DIST.	COUNTY	ROUTE	POST MILES TOTAL PROJECT	SHEET NO.	TOTAL SHEETS
03, 08	Sac, SBd	5, 15	23.3, R107.3	258	330

Jaswinder S Gill 08-15-13
REGISTERED ELECTRICAL ENGINEER DATE

REGISTERED PROFESSIONAL ENGINEER JASWINDER GILL No. 18551 Exp. 12-31-14 ELEC STATE OF CALIFORNIA

9-16-13
PLANS APPROVAL DATE

The State of California or its officers or agents shall not be responsible for the accuracy or completeness of electronic copies of this plan sheet.

CALIFORNIA STATE FIRE MARSHAL APPROVED
Approval of this plan does not authorize or approve any omission or deviation from applicable regulations. Final approval is subject to field inspection. One set of approved plans shall be available on the project site at all times.
Reviewed by: FRANCIS SOLICH
Approval date: 09-11-13

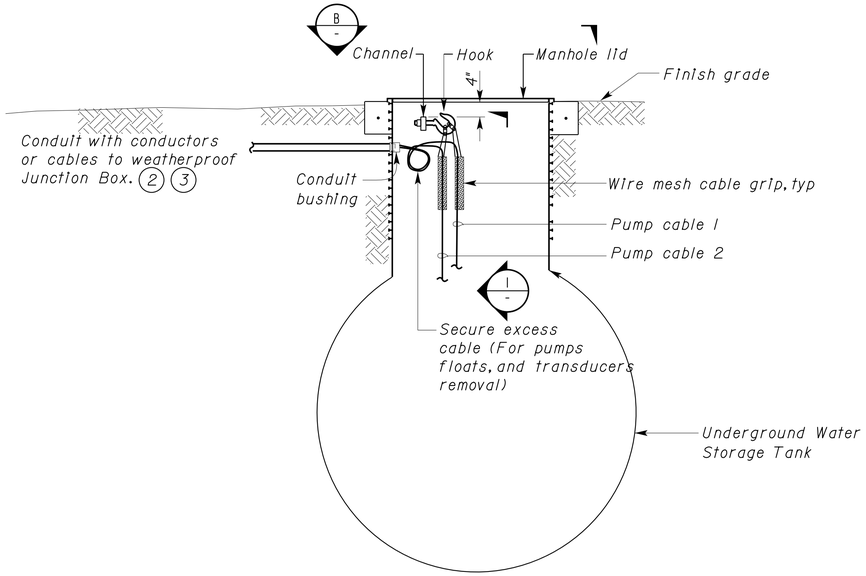

A SECTION
NO SCALE

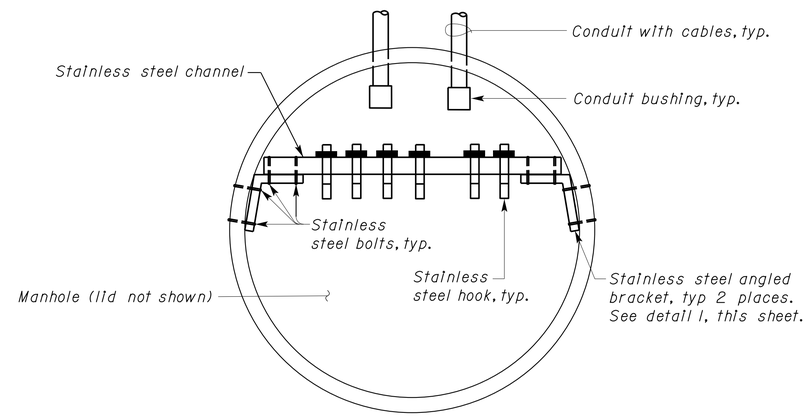

B TOP VIEW
NO SCALE

Notes:

1. Coil minimum of 5' of each cable. Attach the coiled cable to stainless steel hooks with copper wire ties.
2. Only pump motor power conduit is shown for clarity. See sheet EE4-03 for float switches and level transducer conduits. See Water sheets for tank details.
3. See sheet EE4-03 for location of weatherproof junction boxes. And, see sheet EE4-4.2 for mounting details of weatherproof junction boxes.

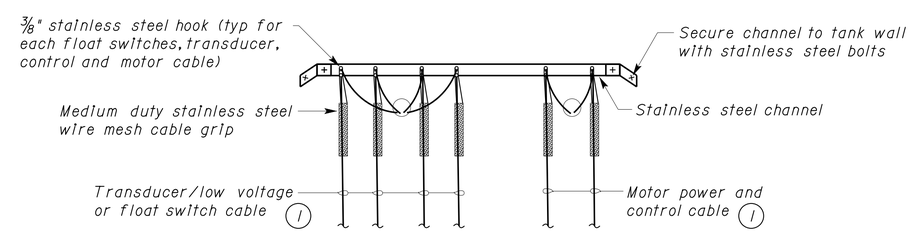

1 TYPICAL CABLE MOUNTING DETAIL
NO SCALE

THIS DRAWING ACCURATE FOR ELECTRICAL WORK ONLY

DESIGN	BY Jaswinder Gill	CHECKED J. S. Sandhu	
DETAILS	BY Ed D.Tapalla 9/09	CHECKED Jaswinder Gill	
QUANTITIES	BY Jaswinder Gill	CHECKED J. S. Sandhu	

STATE OF CALIFORNIA DEPARTMENT OF TRANSPORTATION

DIVISION OF ENGINEERING SERVICES
ELECTRICAL-MECHANICAL-WATER AND WASTEWATER DESIGN

BRIDGE NO. 540004R/L
POST MILE R107.3

C. V. KANE
SAFETY ROADSIDE REST AREA REHABILITATION
STRUCTURE 4 WATER TREATMENT
ELECTRICAL DETAILS 1

SHEET EE4-4.9

DOES SD Imperial Rev. 9/02

ORIGINAL SCALE IN INCHES FOR REDUCED PLANS 0 1 2 3

UNIT 3596
PROJECT NUMBER & PHASE 08000002291

DISREGARD PRINTS BEARING EARLIER REVISION DATES →
REVISION DATES (PRELIMINARY STAGE ONLY) 02/17/09 02/18/10 6/14/10 10/25/10 01/26/11 11/4/11 1/3/12 8/15/13

SHEET OF

18-SEP-2013 12:40
ee4_4_09.dgn

DIST.	COUNTY	ROUTE	POST MILES TOTAL PROJECT	SHEET NO.	TOTAL SHEETS
03, 08	Sac, SBd	5, 15	23.3, R107.3	259	330

REGISTERED ELECTRICAL ENGINEER — 08-15-13 DATE

REGISTERED PROFESSIONAL ENGINEER — JASWINDER GILL — No. 18551 — Exp. 12-31-14 — ELEC — STATE OF CALIFORNIA

9-16-13
PLANS APPROVAL DATE

The State of California or its officers or agents shall not be responsible for the accuracy or completeness of electronic copies of this plan sheet.

CALIFORNIA STATE FIRE MARSHAL APPROVED
Approval of this plan does not authorize or approve any omission or deviation from applicable regulations. Final approval is subject to field inspection. One set of approved plans shall be available on the project site at all times.
Reviewed by: FRANCIS SOLICH
Approval date: 09-11-13

Notes:

1. *For continuation, see Well Pump Control Station Control Schematic, this sheet.*
2. *For continuation, see Well Pump Control Station Power Schematic, this sheet.*
3. *AC Disconnect (ACD) is at the PLC cabinet inside the water treatment building.*
4. *For continuation, see PLC Digital Input Modules, this sheet.*
5. *Part of fiber optic float switch junction box. See C EE4-5.4.*

* *Motor Integral thermal protector*

** *For connection to PLC see, PLC Digital Input Module this sheet*

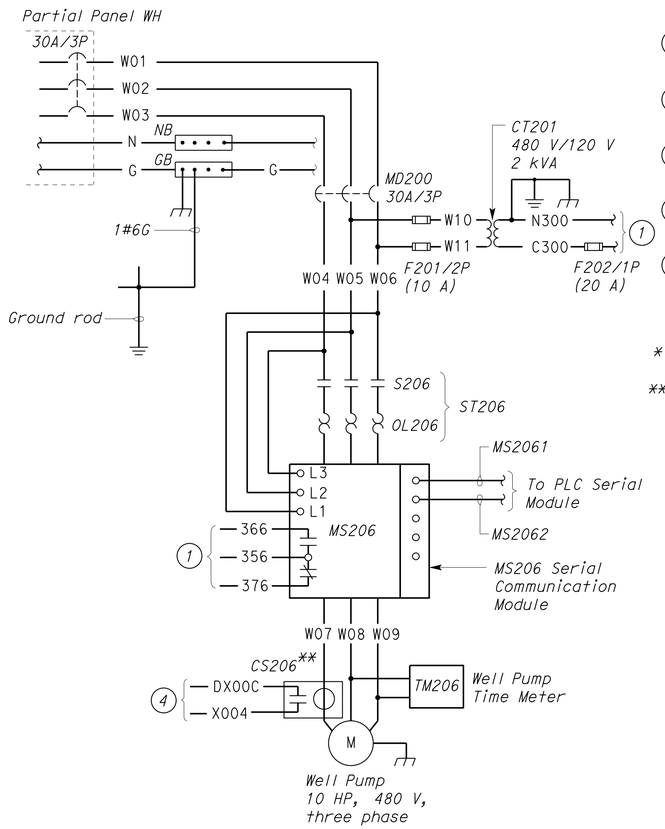

A WELL PUMP CONTROL STATION POWER SCHEMATIC

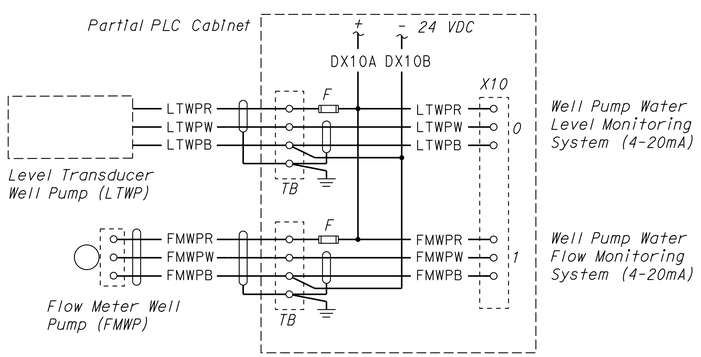

E PLC ANALOG INPUT MODULES

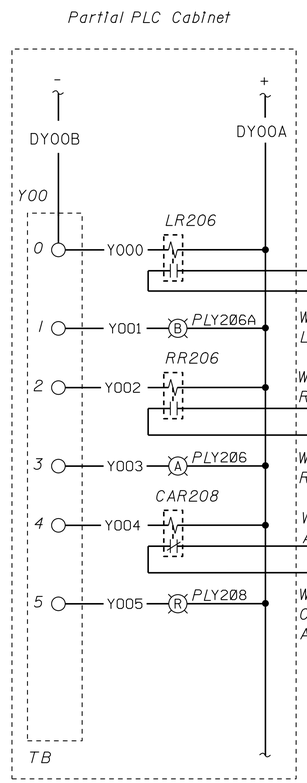

D PLC DIGITAL OUTPUT MODULES

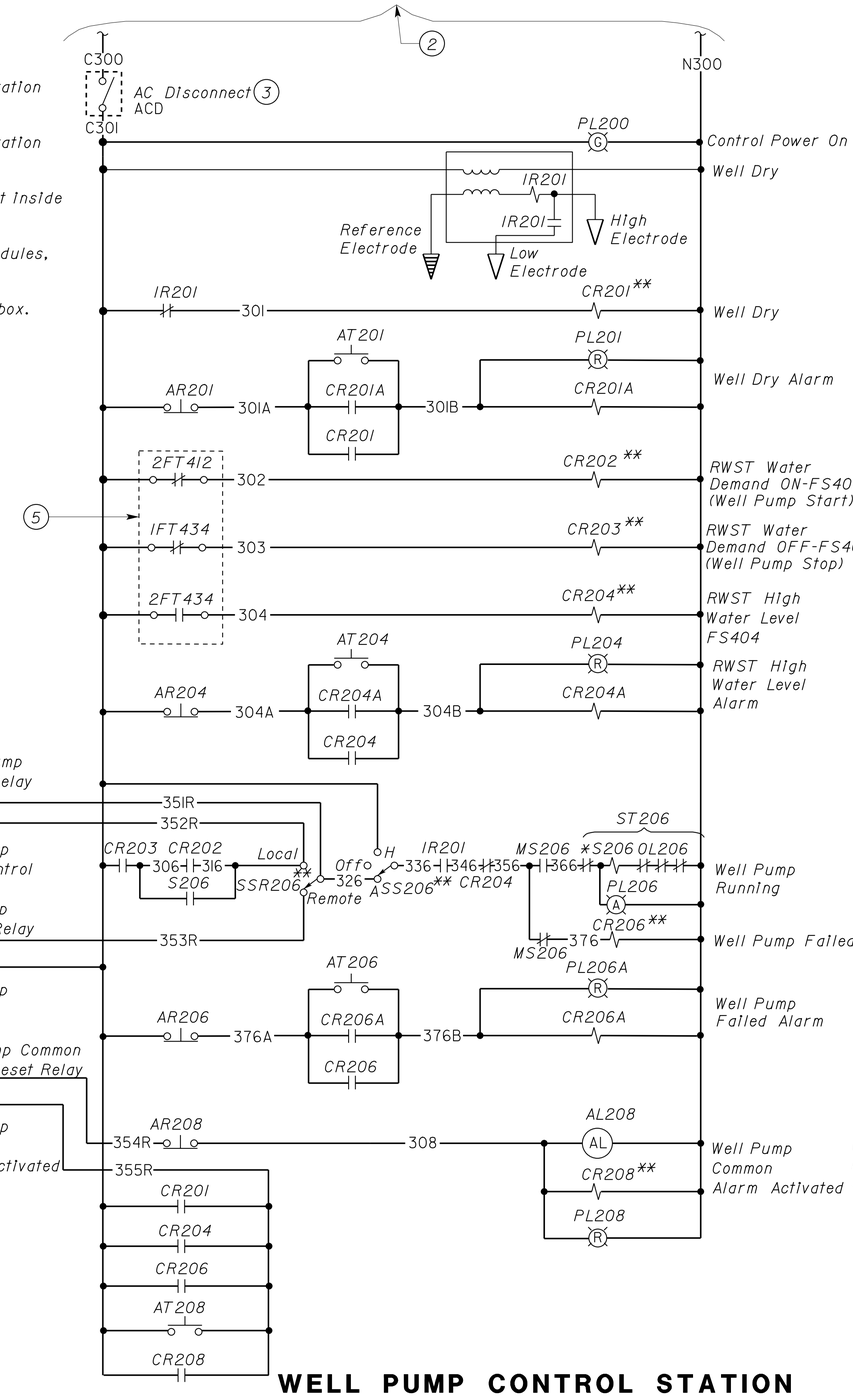

B WELL PUMP CONTROL STATION CONTROL SCHEMATIC

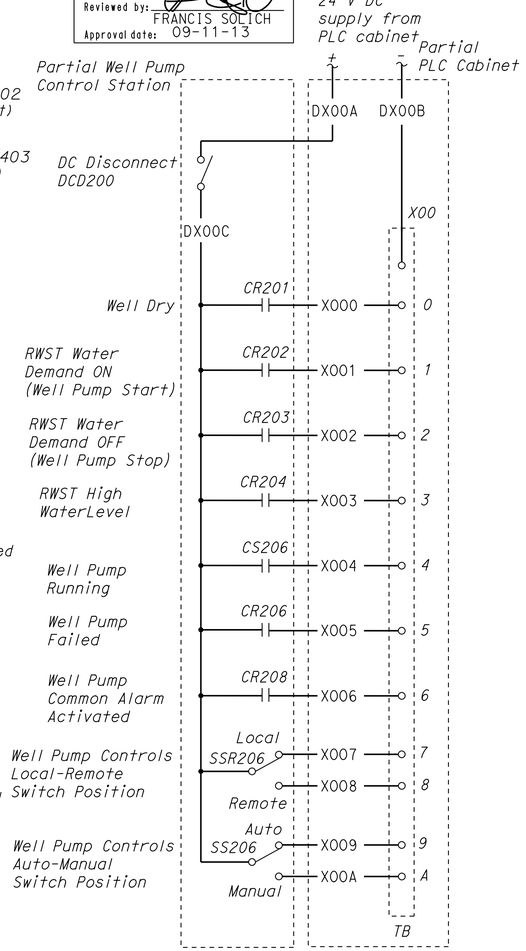

C PLC DIGITAL INPUT MODULES

DESIGN	BY Jaswinder Gill	CHECKED J. S. Sandhu	
DETAILS	BY Ed D.Tapalla 9/09	CHECKED Jaswinder Gill	
QUANTITIES	BY Jaswinder Gill	CHECKED J. S. Sandhu	

STATE OF CALIFORNIA
DEPARTMENT OF TRANSPORTATION

DIVISION OF ENGINEERING SERVICES
ELECTRICAL-MECHANICAL-WATER AND WASTEWATER DESIGN

UNIT 3596
PROJECT NUMBER & PHASE 08000002291

BRIDGE NO. 540004R/L
POST MILE R107.3

C. V. KANE
SAFETY ROADSIDE REST AREA REHABILITATION
STRUCTURE 4 WATER TREATMENT
WELL PUMP CONTROL STATION SCHEMATIC DIAGRAM

SHEET EE4-5.1

DISREGARD PRINTS BEARING EARLIER REVISION DATES → 12/17/09 02/18/10 04/05/10 6/14/10 10/25/10 01/26/11 11/4/11 1/24/12 8/15/13

SHEET OF

ORIGINAL SCALE IN INCHES FOR REDUCED PLANS 0 1 2 3

DOES SD Imperial Rev. 9/02

18-SEP-2013 12:40

ee4_5_01.dgn

DIST.	COUNTY	ROUTE	POST MILES TOTAL PROJECT	SHEET NO.	TOTAL SHEETS
03, 08	Sac, SBd	5, 15	23.3, R107.3	260	330

CALIFORNIA STATE FIRE MARSHAL APPROVED
Approval of this plan does not authorize or approve any omission or deviation from applicable regulations. Final approval is subject to field inspection. One set of approved plans shall be available on the project site at all times.
Reviewed by: FRANCIS SOLICH
Approval date: 09-11-13

Jaswinder S Gill — REGISTERED ELECTRICAL ENGINEER — 08-15-13 DATE

REGISTERED PROFESSIONAL ENGINEER — JASWINDER GILL — No. 18551 — Exp. 12-31-14 — ELEC — STATE OF CALIFORNIA

9-16-13
PLANS APPROVAL DATE

The State of California or its officers or agents shall not be responsible for the accuracy or completeness of electronic copies of this plan sheet.

Notes:

1. *For continuation, see RWBP Control Station Control Schematic 1, on sheet EE4-5.3.*
2. *For continuation, see PLC Digital Input Modules, on sheet EE4-5.3.*
3. *AC Disconnect (ACD) is at the PLC cabinet inside IFS3.*

** *For connection to PLC, see PLC Digital Input Module on sheet EE4-5.3.*

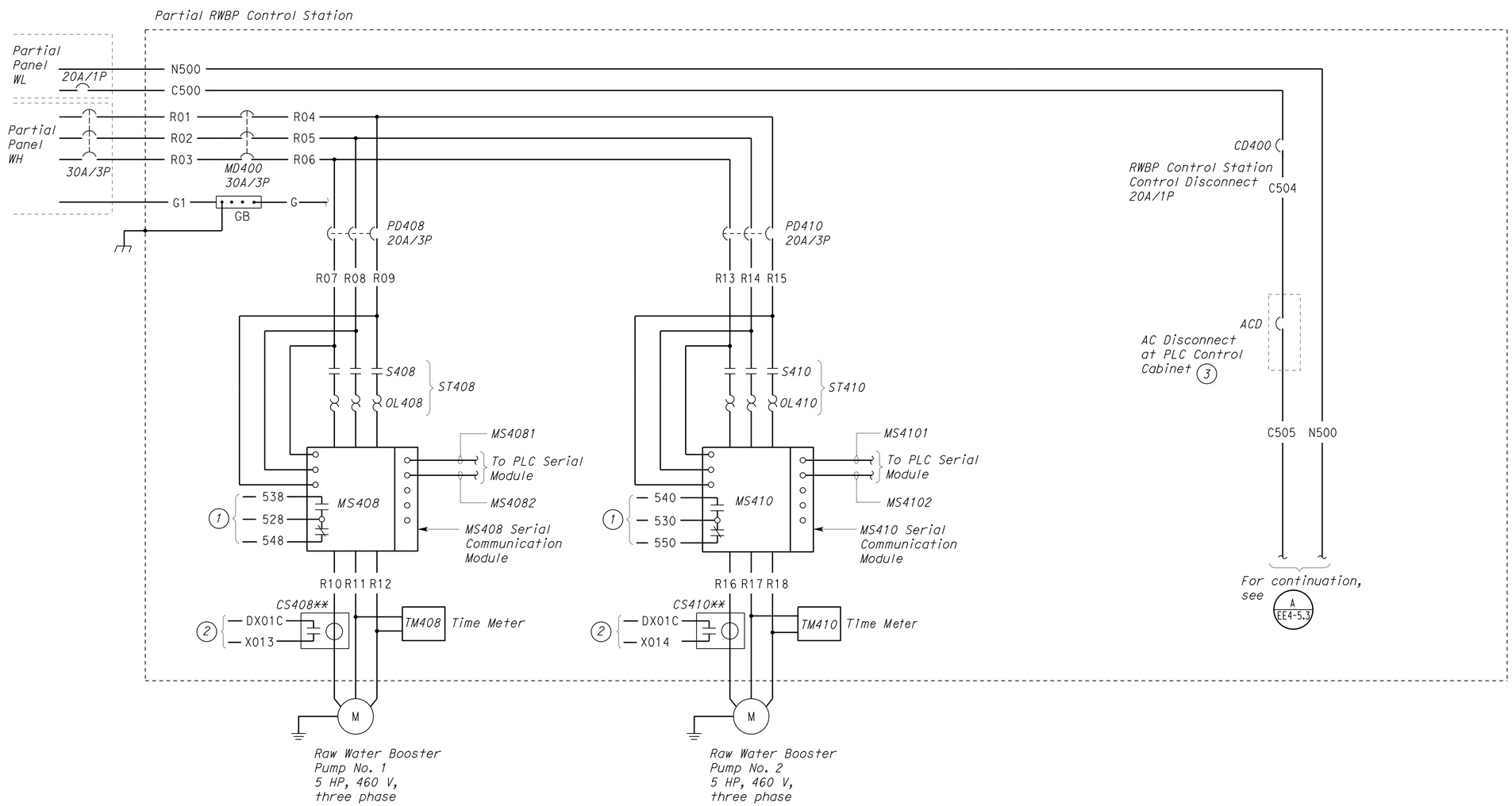

A RWBP CONTROL STATION POWER SCHEMATIC

	BY	CHECKED
DESIGN	Jaswinder Gill	J. S. Sandhu
DETAILS	Ed D. Tapalla 12/10	Jaswinder Gill
QUANTITIES	Jaswinder Gill	J. S. Sandhu

STATE OF CALIFORNIA
DEPARTMENT OF TRANSPORTATION

DIVISION OF ENGINEERING SERVICES
ELECTRICAL-MECHANICAL-WATER AND WASTEWATER DESIGN

BRIDGE NO. 540004R/L
POST MILE R107.3

C. V. KANE
SAFETY ROADSIDE REST AREA REHABILITATION
STRUCTURE 4 WATER TREATMENT
RWBP CONTROL STATION POWER SCHEMATIC DIAGRAM 1

SHEET EE4-5.2

DOES SD Imperial Rev. 9/02

ORIGINAL SCALE IN INCHES FOR REDUCED PLANS 0 1 2 3

UNIT 3596
PROJECT NUMBER & PHASE 08000002291

DISREGARD PRINTS BEARING EARLIER REVISION DATES
REVISION DATES (PRELIMINARY STAGE ONLY) 12/17/09 02/18/10 04/05/10 5/14/10 10/25/10 01/28/11 11/4/11 11/2/12 8/15/13
SHEET OF

18-SEP-2013 12:40
ee4_5_02.dgn

DIST.	COUNTY	ROUTE	POST MILES TOTAL PROJECT	SHEET NO.	TOTAL SHEETS
03, 08	Sac, SBd	5, 15	23.3, R107.3	261	330

Jaswinder S Gill — REGISTERED ELECTRICAL ENGINEER — 08-15-13 DATE

REGISTERED PROFESSIONAL ENGINEER — JASWINDER GILL — No. 18551 — Exp. 12-31-14 — ELEC — STATE OF CALIFORNIA

9-16-13
PLANS APPROVAL DATE

The State of California or its officers or agents shall not be responsible for the accuracy or completeness of electronic copies of this plan sheet.

CALIFORNIA STATE FIRE MARSHAL APPROVED

Approval of this plan does not authorize or approve any omission or deviation from applicable regulations. Final approval is subject to field inspection. One set of approved plans shall be available on the project site at all times.

Reviewed by: FRANCIS SOLICH
Approval date: 09-11-13

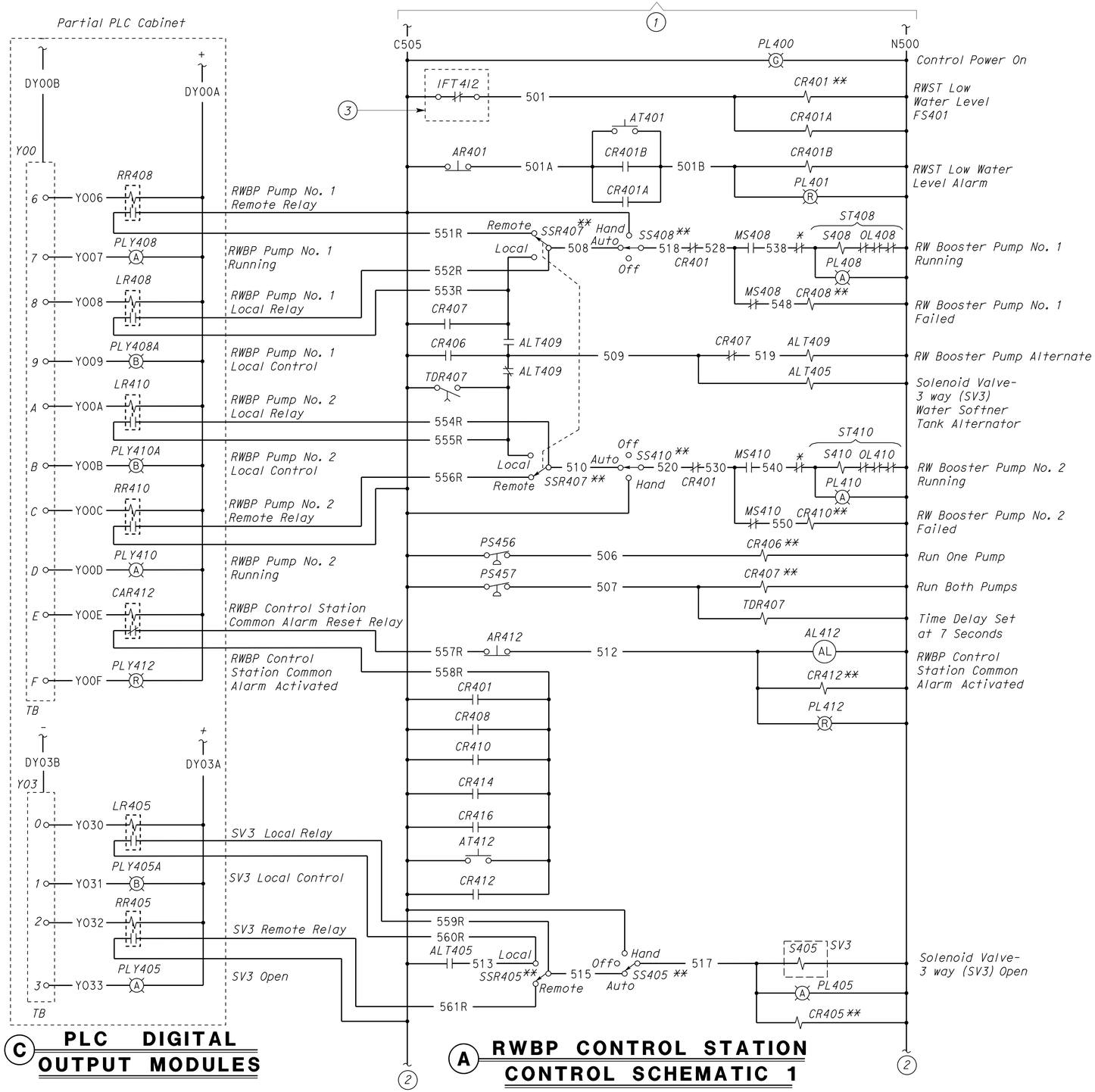

C PLC DIGITAL OUTPUT MODULES

A RWBP CONTROL STATION CONTROL SCHEMATIC 1

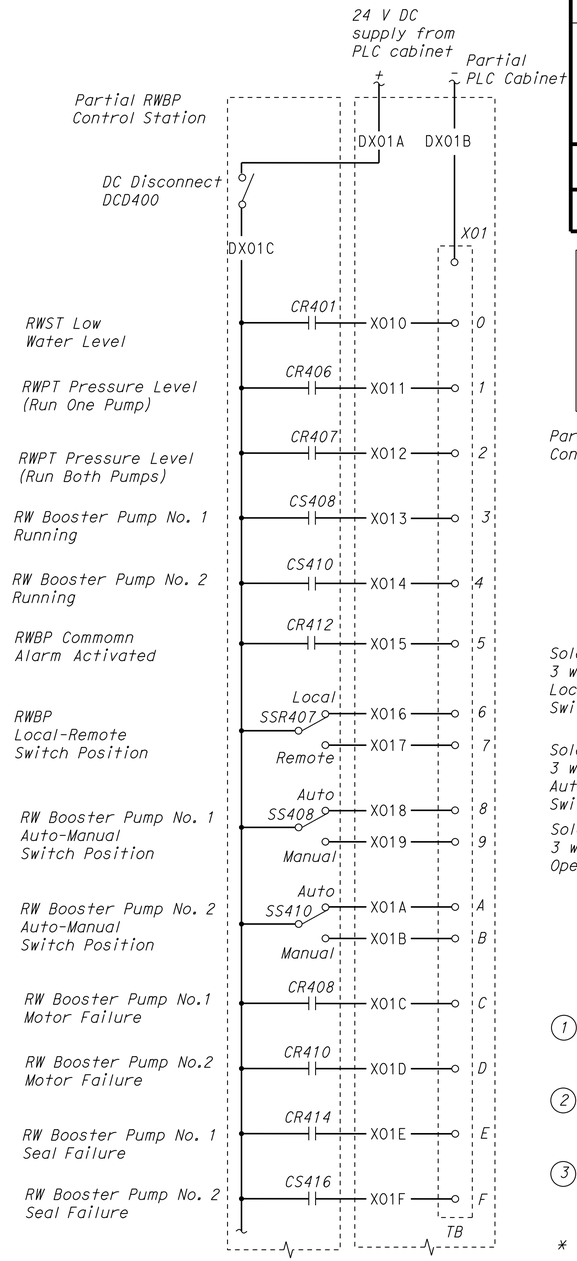

B PLC DIGITAL INPUT MODULES

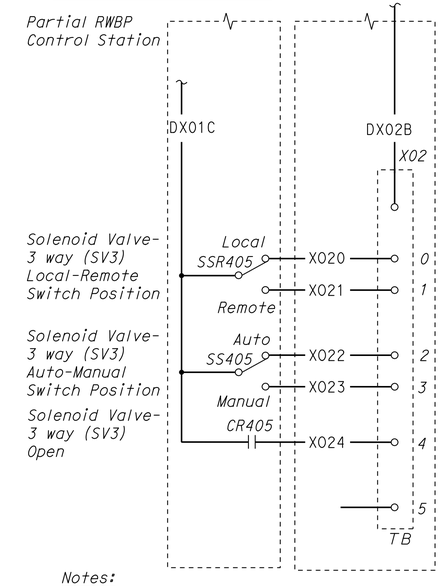

Notes:

1. For continuation, see RWBP Control Station Power Schematic, on sheet EE4-5.2.
2. For continuation, see RWBP Control Station Control Schematic 2, on sheet EE4-5.4.
3. Part of fiber optic float switch junction box, see C / EE4-5.4.

* Motor integral thermal protection

** For connection to PLC see, PLC Digital Input Module this sheet

	BY	CHECKED
DESIGN	Jaswinder Gill	J. S. Sandhu
DETAILS	Ed D.Tapalla 9/09	Jaswinder Gill
QUANTITIES	Jaswinder Gill	J. S. Sandhu

ORIGINAL SCALE IN INCHES FOR REDUCED PLANS 0 1 2 3

STATE OF CALIFORNIA
DEPARTMENT OF TRANSPORTATION

DIVISION OF ENGINEERING SERVICES
ELECTRICAL-MECHANICAL-WATER AND WASTEWATER DESIGN

UNIT 3596
PROJECT NUMBER & PHASE 08000002291

BRIDGE NO. 540004R/L
POST MILE R107.3

C. V. KANE
SAFETY ROADSIDE REST AREA REHABILITATION
STRUCTURE 4 WATER TREATMENT
RWBP CONTROL STATION CONTROL SCHEMATIC DIAGRAM 1

SHEET EE4-5.3

DISREGARD PRINTS BEARING EARLIER REVISION DATES →

REVISION DATES (PRELIMINARY STAGE ONLY) 12/17/09 02/18/10 04/05/10 6/24/10 10/25/10 01/25/11 11/4/11 1/3/12 SHEET OF

DOES SD Imperial Rev. 9/02

18-SEP-2013 12:40

ee4_5_03.dgn

DIST.	COUNTY	ROUTE	POST MILES TOTAL PROJECT	SHEET NO.	TOTAL SHEETS
03, 08	Sac, SBd	5, 15	23.3, R107.3	262	330

Jaswinder S Gill
REGISTERED ELECTRICAL ENGINEER — 08-15-13 DATE

REGISTERED PROFESSIONAL ENGINEER — JASWINDER GILL — No. 18551 — Exp. 12-31-14 — ELEC — STATE OF CALIFORNIA

9-16-13
PLANS APPROVAL DATE

The State of California or its officers or agents shall not be responsible for the accuracy or completeness of electronic copies of this plan sheet.

CALIFORNIA STATE FIRE MARSHAL APPROVED
Approval of this plan does not authorize or approve any omission or deviation from applicable regulations. Final approval is subject to field inspection. One set of approved plans shall be available on the project site at all times.
Reviewed by: FRANCIS SOLICH
Approval date: 09-11-13

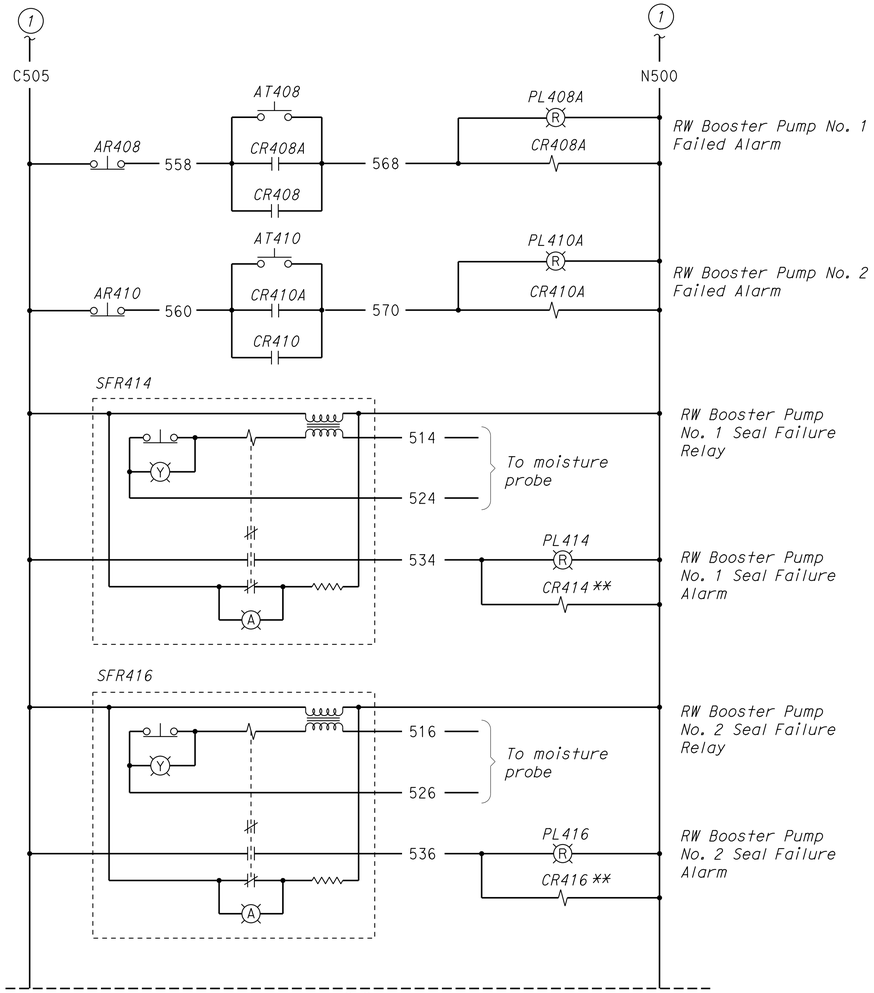

(A) RWBP CONTROL STATION CONTROL SCHEMATIC 2

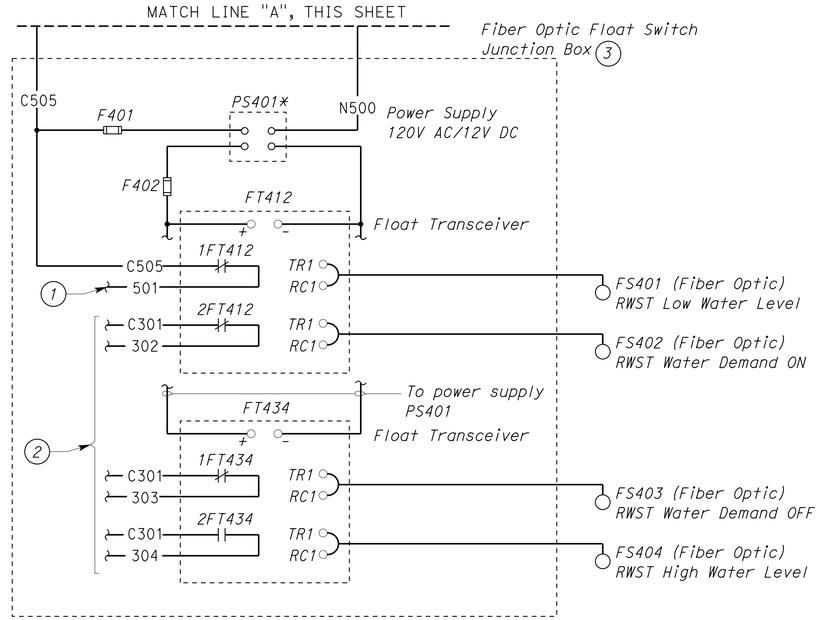

(C) FIBER OPTIC FLOAT SWITCH JUNCTION BOX SCHEMATIC

* Size power supply to 4 times the full load current.

** For connection to PLC see, PLC Digital Input Module, on sheet EE4-5.3.

Notes:

(1) For continuation, see RWBP Control Station Control Schematic 1, on sheet EE4-5.3.

(2) For continuation, see Well Pump Control Station Schematic, on sheet EE4-5.1.

(3) Install warning plates with the following inscription:

1. Disconnecting DCD does not de-energizes the fiber optic float switch junction box.
2. To completely de-energize the fiber optic float switch junction box, disconnect the control power disconnect ACD at the PLC control cabinet inside the water treatment building.

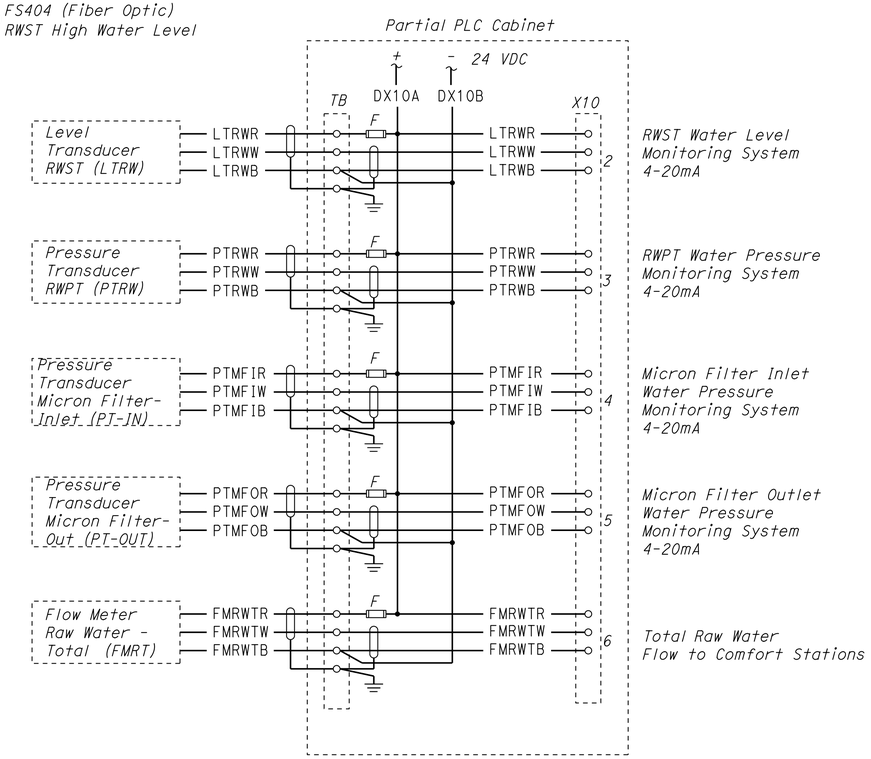

(B) PLC ANALOG INPUT MODULES

	BY	CHECKED
DESIGN	Jaswinder Gill	J. S. Sandhu
DETAILS	Ed D.Tapalla 9/09	Jaswinder Gill
QUANTITIES	Jaswinder Gill	J. S. Sandhu

STATE OF CALIFORNIA
DEPARTMENT OF TRANSPORTATION

DIVISION OF ENGINEERING SERVICES
ELECTRICAL-MECHANICAL-WATER AND WASTEWATER DESIGN

BRIDGE NO. 540004R/L
POST MILE R107.3

C. V. KANE
SAFETY ROADSIDE REST AREA REHABILITATION
STRUCTURE 4 WATER TREATMENT
RWBP CONTROL STATION CONTROL SCHEMATIC DIAGRAM 2

SHEET EE4-5.4

DOES SD Imperial Rev. 9/02

ORIGINAL SCALE IN INCHES FOR REDUCED PLANS 0 1 2 3

UNIT 3596
PROJECT NUMBER & PHASE 08000002291

DISREGARD PRINTS BEARING EARLIER REVISION DATES → 12/17/09 02/18/10 04/05/10 6/14/10 10/25/10 01/25/11 11/4/11 1/27/12 8/15/13

REVISION DATES (PRELIMINARY STAGE ONLY) SHEET OF

18-SEP-2013 12:41
ee4_5_04.dgn

Notes:

1. For continuation, see PWBP Control Station Control Schematic 1, on sheet EE4-5.6.
2. For continuation, see PLC Digital Input Modules, on sheet EE4-5.6.
3. AC Disconnect (ACD) is at the PLC cabinet inside IFS3.

** For connection to PLC see, PLC Digital Input Module on sheet EE4-5.6.

CALIFORNIA STATE FIRE MARSHAL APPROVED
Approval of this plan does not authorize or approve any omission or deviation from applicable regulations. Final approval is subject to field inspection. One set of approved plans shall be available on the project site at all times.
Reviewed by: FRANCIS SOLICH
Approval date: 09-11-13

DIST.	COUNTY	ROUTE	POST MILES TOTAL PROJECT	SHEET NO.	TOTAL SHEETS
03, 08	Sac, SBd	5, 15	23.3, R107.3	263	330

Jaswinder S Gill 08-15-13
REGISTERED ELECTRICAL ENGINEER DATE

REGISTERED PROFESSIONAL ENGINEER JASWINDER GILL No. 18551 Exp. 12-31-14 ELEC STATE OF CALIFORNIA

9-16-13
PLANS APPROVAL DATE

The State of California or its officers or agents shall not be responsible for the accuracy or completeness of electronic copies of this plan sheet.

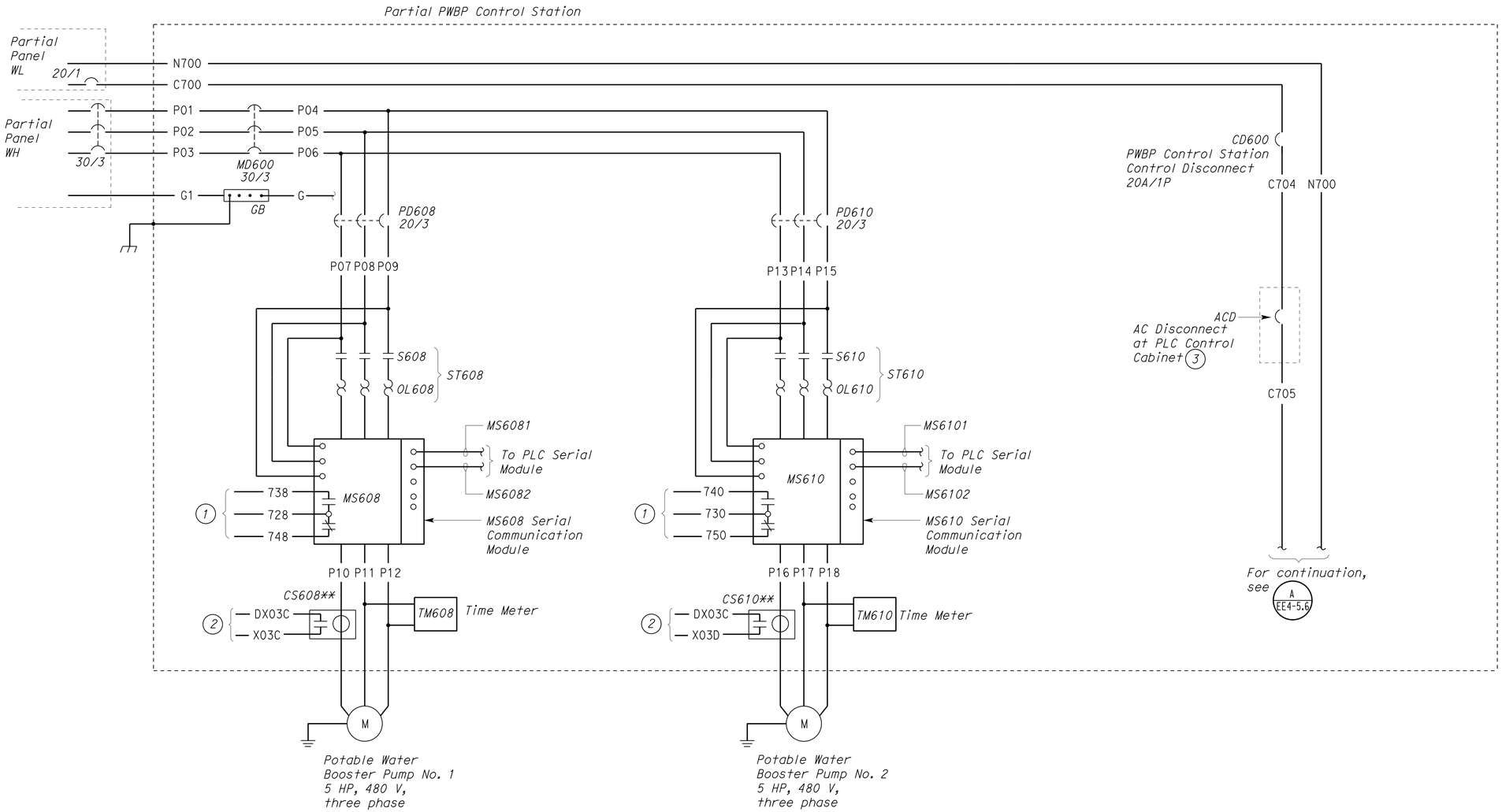

A PWBP CONTROL STATION POWER SCHEMATIC

	BY	CHECKED
DESIGN	Jaswinder Gill	J. S. Sandhu
DETAILS	Ed D. Tapalla 9/09	Jaswinder Gill
QUANTITIES	Jaswinder Gill	J. S. Sandhu

STATE OF CALIFORNIA DEPARTMENT OF TRANSPORTATION

DIVISION OF ENGINEERING SERVICES
ELECTRICAL-MECHANICAL-WATER AND WASTEWATER DESIGN

BRIDGE NO. 540004R/L
POST MILE R107.3

C. V. KANE
SAFETY ROADSIDE REST AREA REHABILITATION
STRUCTURE 4 WATER TREATMENT
PWBP CONTROL STATION POWER SCHEMATIC DIAGRAM 1

SHEET EE4-5.5

DOES SD Imperial Rev. 9/02

ORIGINAL SCALE IN INCHES FOR REDUCED PLANS 0 1 2 3

UNIT 3596
PROJECT NUMBER & PHASE 08000002291

DISREGARD PRINTS BEARING EARLIER REVISION DATES → 12/17/09 02/18/10 04/08/10 6/24/10 10/28/10 01/28/11 11/4/11 1/27/12 8/15/13

REVISION DATES (PRELIMINARY STAGE ONLY) SHEET OF

18-SEP-2013 12:41
ee4_5_05.dgn

Notes:

1. For continuation, see PWBP Control Station Power Schematic, on sheet EE4-5.5.
2. For continuation, see PWBP Control Station Control Schematic 2, on sheet EE4-5.7.
3. Part of fiber optic float switch junction box. See C / EE4-5.7.

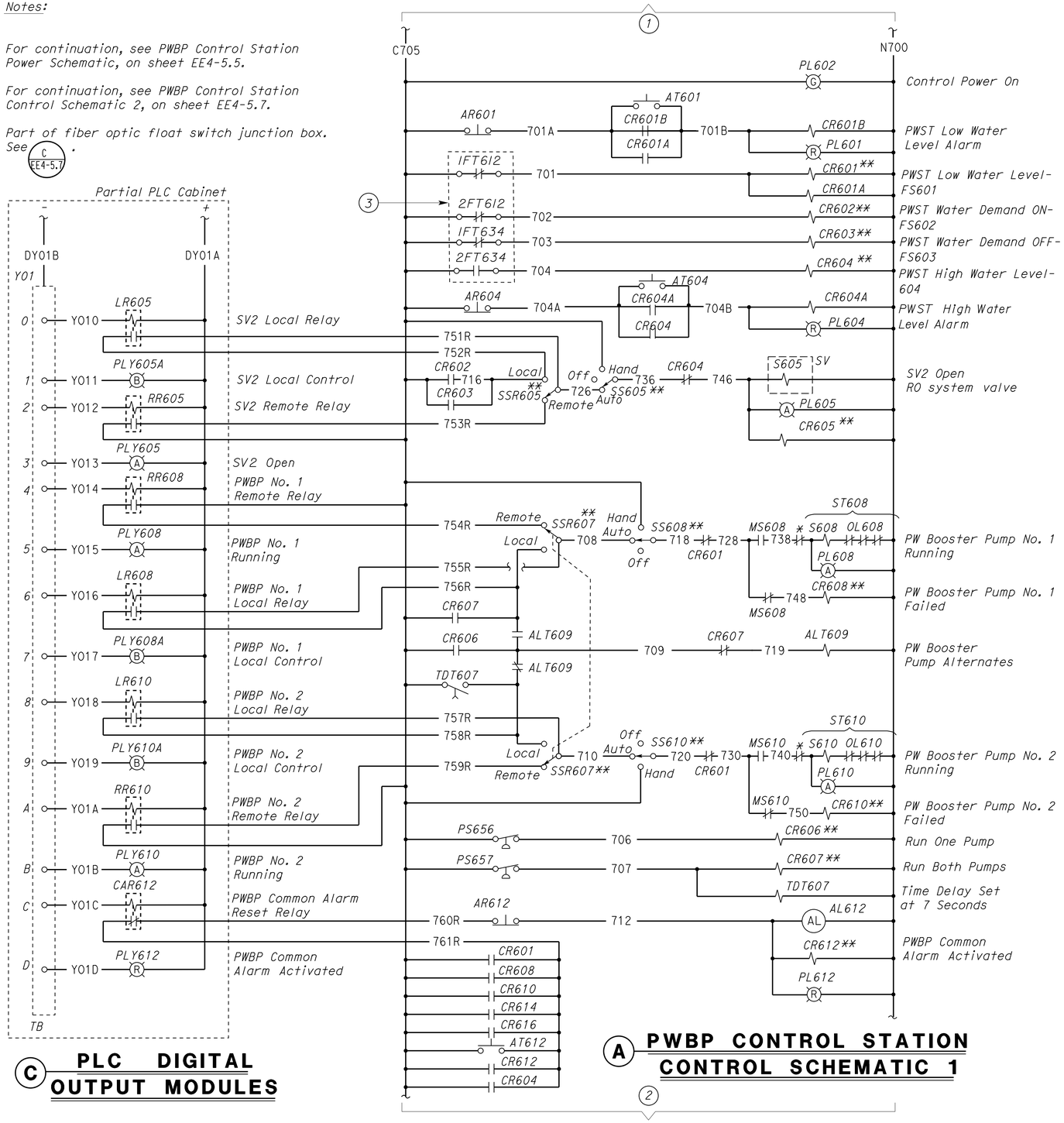

C PLC DIGITAL OUTPUT MODULES

A PWBP CONTROL STATION CONTROL SCHEMATIC 1

* Motor integral thermal protection

** For connection to PLC see, PLC Digital Input Module this sheet

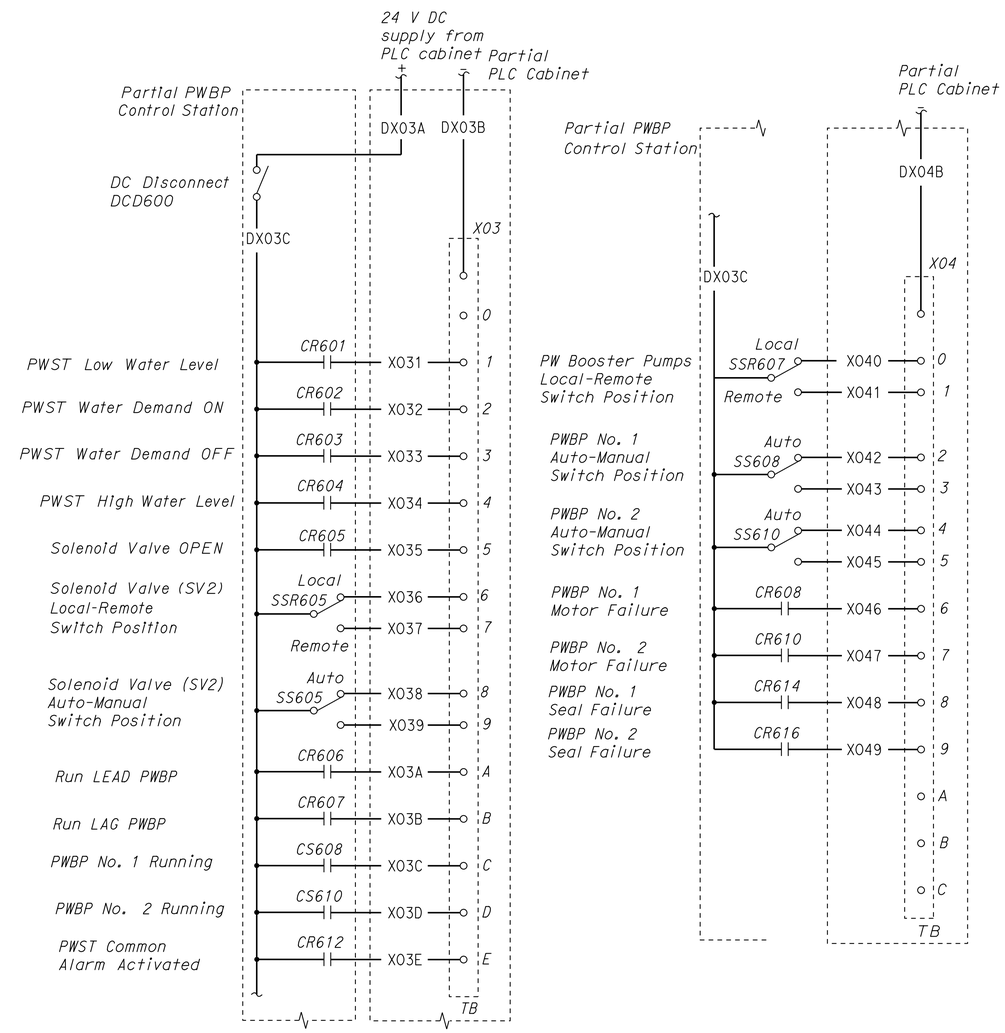

B PLC DIGITAL INPUT MODULES

CALIFORNIA STATE FIRE MARSHAL APPROVED
Approval of this plan does not authorize or approve any omission or deviation from applicable regulations. Final approval is subject to field inspection. One set of approved plans shall be available on the project site at all times.
Reviewed by: FRANCIS SOLICH
Approval date: 09-11-13

DIST.	COUNTY	ROUTE	POST MILES TOTAL PROJECT	SHEET NO.	TOTAL SHEETS
03, 08	Sac, SBd	5, 15	23.3, R107.3	264	330

Jaswinder S Gill — REGISTERED ELECTRICAL ENGINEER — 08-15-13 DATE

REGISTERED PROFESSIONAL ENGINEER JASWINDER GILL No. 18551 Exp. 12-31-14 ELEC STATE OF CALIFORNIA

9-16-13
PLANS APPROVAL DATE

The State of California or its officers or agents shall not be responsible for the accuracy or completeness of electronic copies of this plan sheet.

	BY	CHECKED
DESIGN	Jaswinder Gill	J. S. Sandhu
DETAILS	Ed D.Tapalla 9/09	Jaswinder Gill
QUANTITIES	Jaswinder Gill	J. S. Sandhu

STATE OF CALIFORNIA DEPARTMENT OF TRANSPORTATION

DIVISION OF ENGINEERING SERVICES
ELECTRICAL-MECHANICAL-WATER AND WASTEWATER DESIGN

BRIDGE NO. 540004R/L
POST MILE R107.3

C. V. KANE
SAFETY ROADSIDE REST AREA REHABILITATION
STRUCTURE 4 WATER TREATMENT
PWBP CONTROL STATION CONTROL SCHEMATIC DIAGRAM 1

SHEET EE4-5.6

DOES SD Imperial Rev. 9/02

ORIGINAL SCALE IN INCHES FOR REDUCED PLANS 0 1 2 3

UNIT 3596
PROJECT NUMBER & PHASE 08000002291

DISREGARD PRINTS BEARING EARLIER REVISION DATES
REVISION DATES (PRELIMINARY STAGE ONLY) 12/17/09 02/18/10 04/05/10 5/14/10 10/25/10 01/26/11 11/4/11 1/27/12 8/15/13
SHEET OF

18-SEP-2013 12:41
ee4_5_06.dgn

DIST.	COUNTY	ROUTE	POST MILES TOTAL PROJECT	SHEET NO.	TOTAL SHEETS
03, 08	Sac, SBd	5, 15	23.3, R107.3	265	330

Jaswinder S Gill 08-15-13
REGISTERED ELECTRICAL ENGINEER DATE

REGISTERED PROFESSIONAL ENGINEER JASWINDER GILL No. 18551 Exp. 12-31-14 ELEC STATE OF CALIFORNIA

9-16-13
PLANS APPROVAL DATE

The State of California or its officers or agents shall not be responsible for the accuracy or completeness of electronic copies of this plan sheet.

CALIFORNIA STATE FIRE MARSHAL APPROVED
Approval of this plan does not authorize or approve any omission or deviation from applicable regulations. Final approval is subject to field inspection. One set of approved plans shall be available on the project site at all times.
Reviewed by: FRANCIS SOLICH
Approval date: 09-11-13

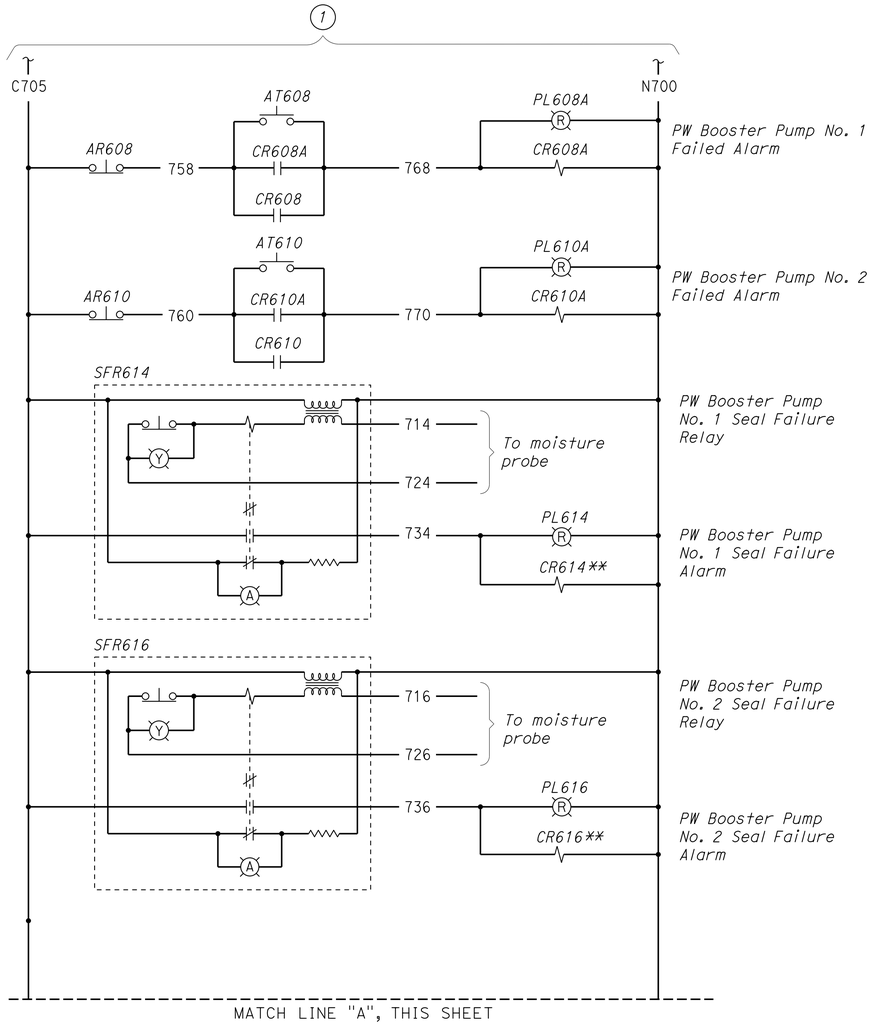

(A) PWBP CONTROL STATION CONTROL SCHEMATIC 2

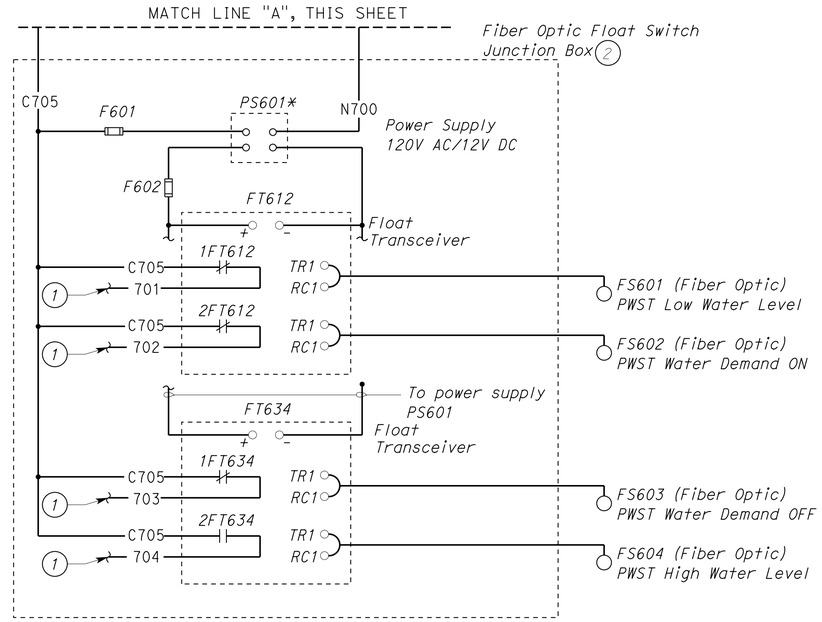

(C) FIBER OPTIC FLOAT SWITCH JUNCTION BOX SCHEMATIC

* Size power supply to 4 times the full load current.

** For connection to PLC see, PLC Digital Input Module, on sheet EE4-5.6.

Notes:

1. For continuation, see PWBP Control Station Control Schematic 1, on sheet EE4-5.6.
2. Install warning plates with the following inscription:
   1. Disconnecting DCD does not de-energizes the fiber optic float switch junction box.
   2. To completely de-energize the fiber optic float switch junction box, disconnect the control power disconnect ACD at the PLC control cabinet inside the water treatment building.

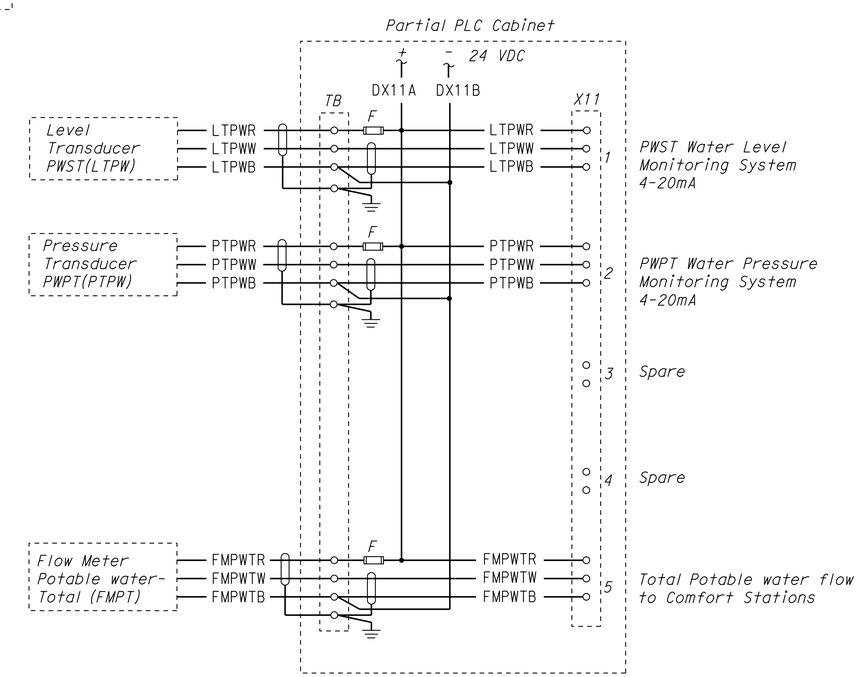

(B) PLC ANALOG INPUT MODULES

DESIGN	BY Jaswinder Gill	CHECKED J. S. Sandhu	
DETAILS	BY Ed D.Tapalla 9/09	CHECKED Jaswinder Gill	
QUANTITIES	BY Jaswinder Gill	CHECKED J. S. Sandhu	

STATE OF CALIFORNIA DEPARTMENT OF TRANSPORTATION

DIVISION OF ENGINEERING SERVICES
ELECTRICAL-MECHANICAL-WATER AND WASTEWATER DESIGN

BRIDGE NO. 540004R/L
POST MILE R107.3

C. V. KANE
SAFETY ROADSIDE REST AREA REHABILITATION
STRUCTURE 4 WATER TREATMENT
PWBP CONTROL STATION CONTROL SCHEMATIC DIAGRAM 2

SHEET EE4-5.7

DOES SD Imperial Rev. 9/02

ORIGINAL SCALE IN INCHES FOR REDUCED PLANS 0 1 2 3

UNIT 3596
PROJECT NUMBER & PHASE 08000002291

DISREGARD PRINTS BEARING EARLIER REVISION DATES →

REVISION DATES (PRELIMINARY STAGE ONLY) 12/18/09 02/18/10 04/05/10 6/04/10 10/25/10 01/28/11 11/4/11 1/24/12 8/15/13 SHEET OF

18-SEP-2013 12:41

ee4_5_07.dgn

DIST.	COUNTY	ROUTE	POST MILES TOTAL PROJECT	SHEET NO.	TOTAL SHEETS
03, 08	Sac, SBd	5, 15	23.3, R107.3	266	330

REGISTERED ELECTRICAL ENGINEER — 08-15-13 DATE

REGISTERED PROFESSIONAL ENGINEER — JASWINDER GILL — No. 18551 — Exp. 12-31-14 — ELEC — STATE OF CALIFORNIA

9-16-13
PLANS APPROVAL DATE

The State of California or its officers or agents shall not be responsible for the accuracy or completeness of electronic copies of this plan sheet.

CALIFORNIA STATE FIRE MARSHAL APPROVED
Approval of this plan does not authorize or approve any omission or deviation from applicable regulations. Final approval is subject to field inspection. One set of approved plans shall be available on the project site at all times.
Reviewed by: FRANCIS SOLICH
Approval date: 09-11-13

Notes:

(1) *For continuation, see Partial Sewage Pump Control Schematic, on sheet EE4-5.9.*

(2) *For continuation, see PLC Digital Input Modules, on sheet EE4-5.9.*

*** For connection to PLC see, PLC Digital Input Module on sheet EE4-5.9.*

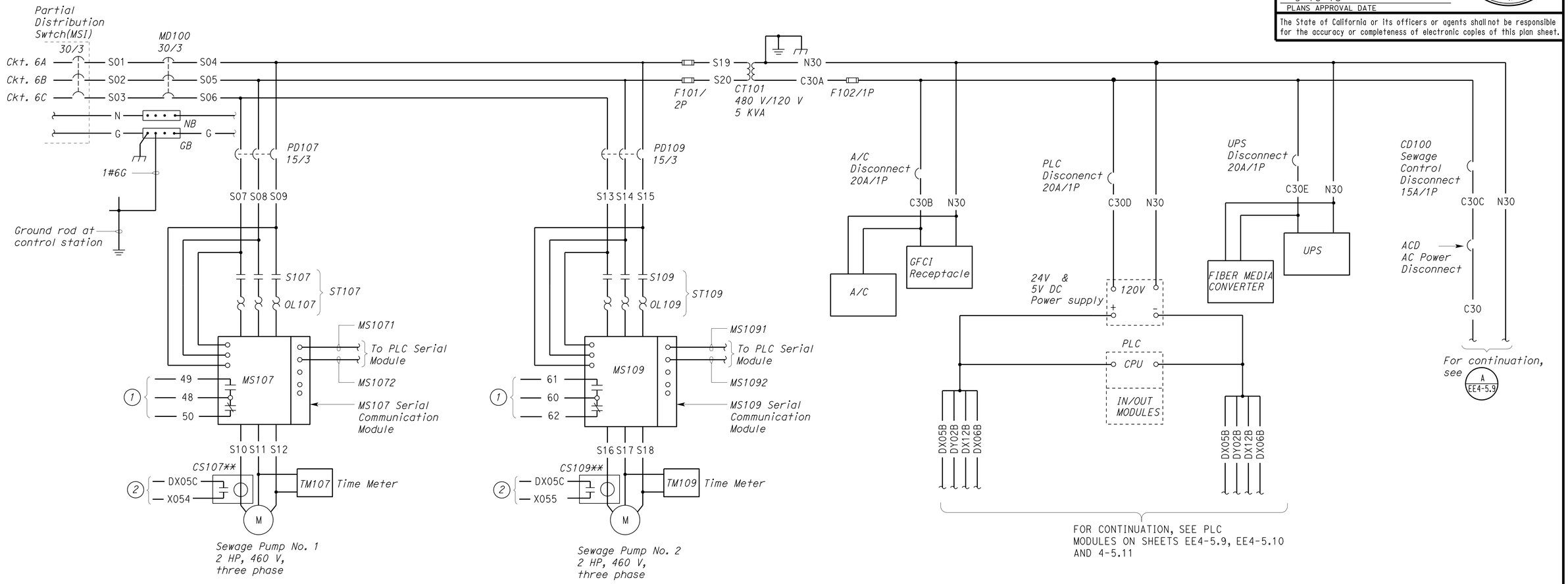

(A) SEWAGE PUMP CONTROL STATION POWER SCHEMATIC

DESIGN	BY Jaswinder Gill	CHECKED J. S. Sandhu
DETAILS	BY Dall Zhou	CHECKED Jaswinder Gill
QUANTITIES	BY Jaswinder Gill	CHECKED J. S. Sandhu

STATE OF CALIFORNIA
DEPARTMENT OF TRANSPORTATION

DIVISION OF ENGINEERING SERVICES
ELECTRICAL-MECHANICAL-WATER AND WASTEWATER DESIGN

BRIDGE NO. 540004R/L
POST MILE R107.3

C. V. KANE
SAFETY ROADSIDE REST AREA REHABILITATION
STRUCTURE 4 WATER TREATMENT
SEWAGE PUMP CONTROL STATION POWER SCHEMATIC DIAGRAM 1

SHEET EE4-5.8

DOES SD Imperial Rev. 9/02

ORIGINAL SCALE IN INCHES FOR REDUCED PLANS 0 1 2 3

UNIT 3596
PROJECT NUMBER & PHASE 08000002291

DISREGARD PRINTS BEARING EARLIER REVISION DATES
REVISION DATES (PRELIMINARY STAGE ONLY) 3/4/10 04/05/10 6/14/10 10/25/10 01/25/11 11/4/11 1/24/12 8/15/13
SHEET OF

18-SEP-2013 12:41
ee4_5_08.dgn

DIST.	COUNTY	ROUTE	POST MILES TOTAL PROJECT	SHEET NO.	TOTAL SHEETS
03, 08	Sac, SBd	5, 15	23.3, R107.3	267	330

REGISTERED ELECTRICAL ENGINEER — 08-15-13. DATE

REGISTERED PROFESSIONAL ENGINEER — JASWINDER GILL — No. 18551 — Exp. 12-31-14 — ELEC — STATE OF CALIFORNIA

9-16-13
PLANS APPROVAL DATE

The State of California or its officers or agents shall not be responsible for the accuracy or completeness of electronic copies of this plan sheet.

CALIFORNIA STATE FIRE MARSHAL APPROVED

Approval of this plan does not authorize or approve any omission or deviation from applicable regulations. Final approval is subject to field inspection. One set of approved plans shall be available on the project site at all times.

Reviewed by: FRANCIS SOLICH
Approval date: 09-11-13

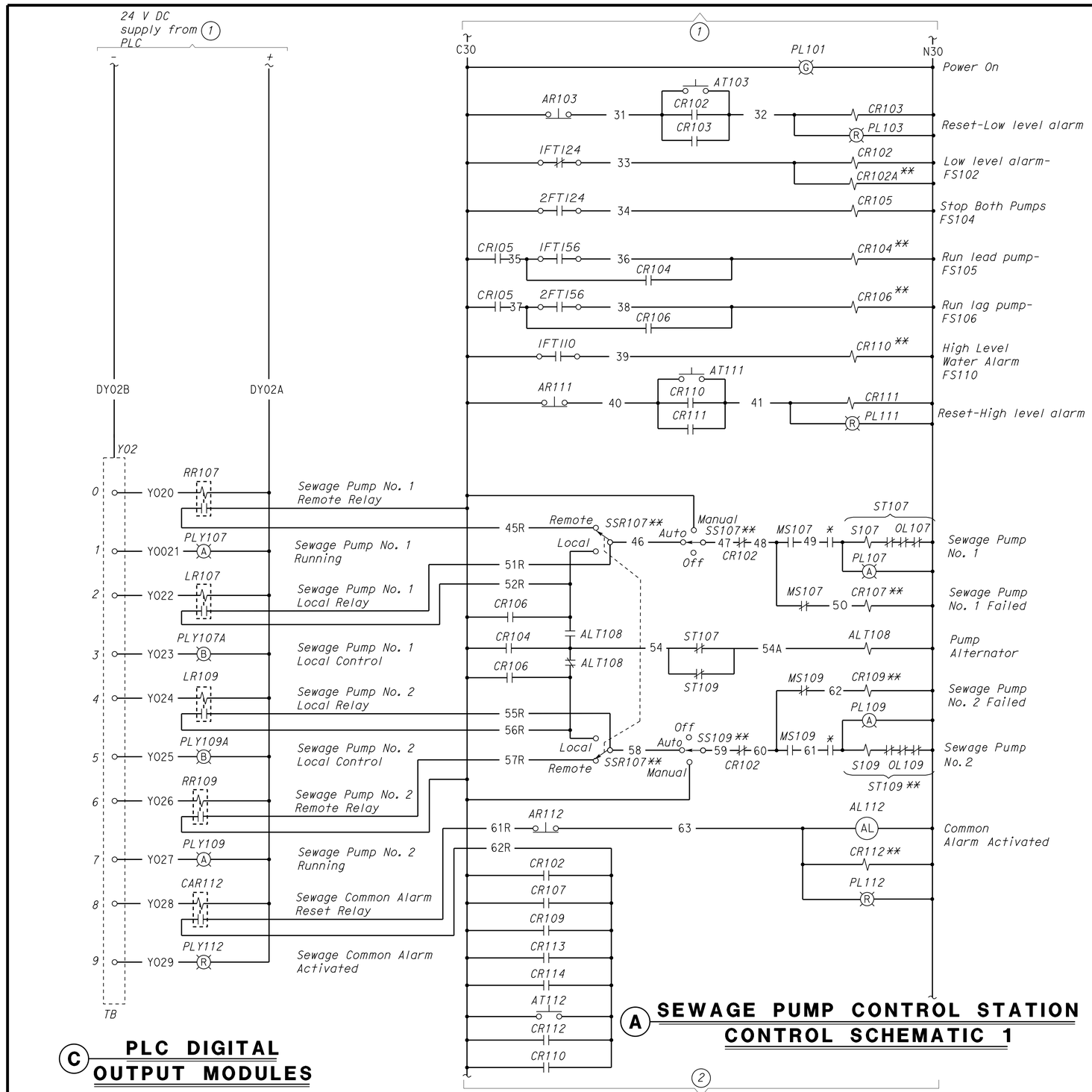

A SEWAGE PUMP CONTROL STATION CONTROL SCHEMATIC 1

C PLC DIGITAL OUTPUT MODULES

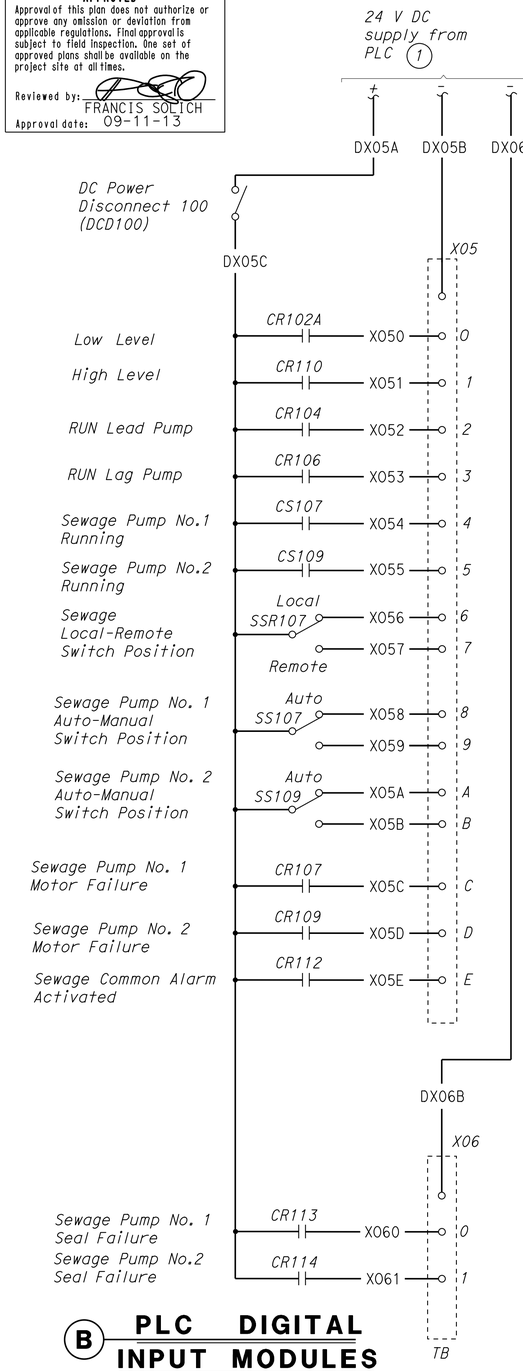

B PLC DIGITAL INPUT MODULES

Notes:

1. For continuation, see Sewage Pump Control Station Power Schematic, on sheet EE4-5.8.
2. For continuation, see Sewage Pump Control Station Control Schematic 2, on sheet EE4-5.10.

* Motor integral thermal protector.

** For connection to PLC see, PLC Digital Input Module this sheet.

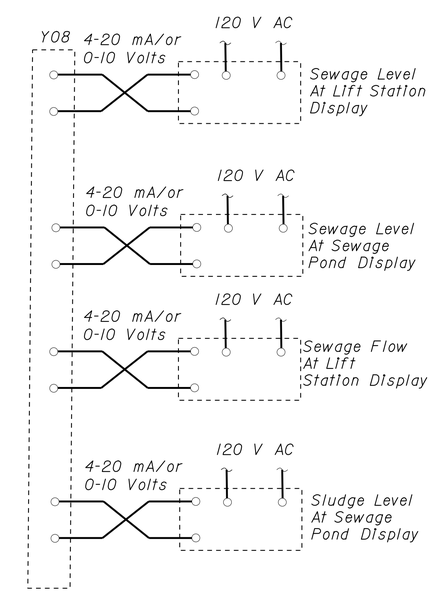

D PLC ANALOG OUTPUT MODULES

DESIGN	BY Jaswinder Gill	CHECKED J. S. Sandhu	
DETAILS	BY Ed D.Tapalla 9/09	CHECKED Jaswinder Gill	
QUANTITIES	BY Jaswinder Gill	CHECKED J. S. Sandhu	

STATE OF CALIFORNIA
DEPARTMENT OF TRANSPORTATION

DIVISION OF ENGINEERING SERVICES
ELECTRICAL-MECHANICAL-WATER AND WASTEWATER DESIGN

BRIDGE NO. 540004R/L
POST MILE R107.3

C. V. KANE
SAFETY ROADSIDE REST AREA REHABILITATION
STRUCTURE 4 WATER TREATMENT
SEWAGE PUMP CONTROL STATION CONTROL SCHEMATIC DIAGRAM I

SHEET EE4-5.9

DOES SD Imperial Rev. 9/02

ORIGINAL SCALE IN INCHES FOR REDUCED PLANS 0 1 2 3

UNIT 3596
PROJECT NUMBER & PHASE 08000002291

DISREGARD PRINTS BEARING EARLIER REVISION DATES → 3/18/09 04/05/10 5/24/10 10/25/10 01/25/11 11/4/11 1/3/12 8/15/13

REVISION DATES (PRELIMINARY STAGE ONLY) SHEET OF

18-SEP-2013 12:41

ee4_5_09.dgn

DIST.	COUNTY	ROUTE	POST MILES TOTAL PROJECT	SHEET NO.	TOTAL SHEETS
03, 08	Sac, SBd	5, 15	23.3, R107.3	268	330

CALIFORNIA STATE FIRE MARSHAL APPROVED

Approval of this plan does not authorize or approve any omission or deviation from applicable regulations. Final approval is subject to field inspection. One set of approved plans shall be available on the project site at all times.

Reviewed by: FRANCIS SOLICH

Approval date: 09-11-13

Jaswinder S Gill 08-15-13

REGISTERED ELECTRICAL ENGINEER — DATE

REGISTERED PROFESSIONAL ENGINEER — JASWINDER GILL — No. 18551 — Exp. 12-31-14 — ELEC — STATE OF CALIFORNIA

9-16-13

PLANS APPROVAL DATE

The State of California or its officers or agents shall not be responsible for the accuracy or completeness of electronic copies of this plan sheet.

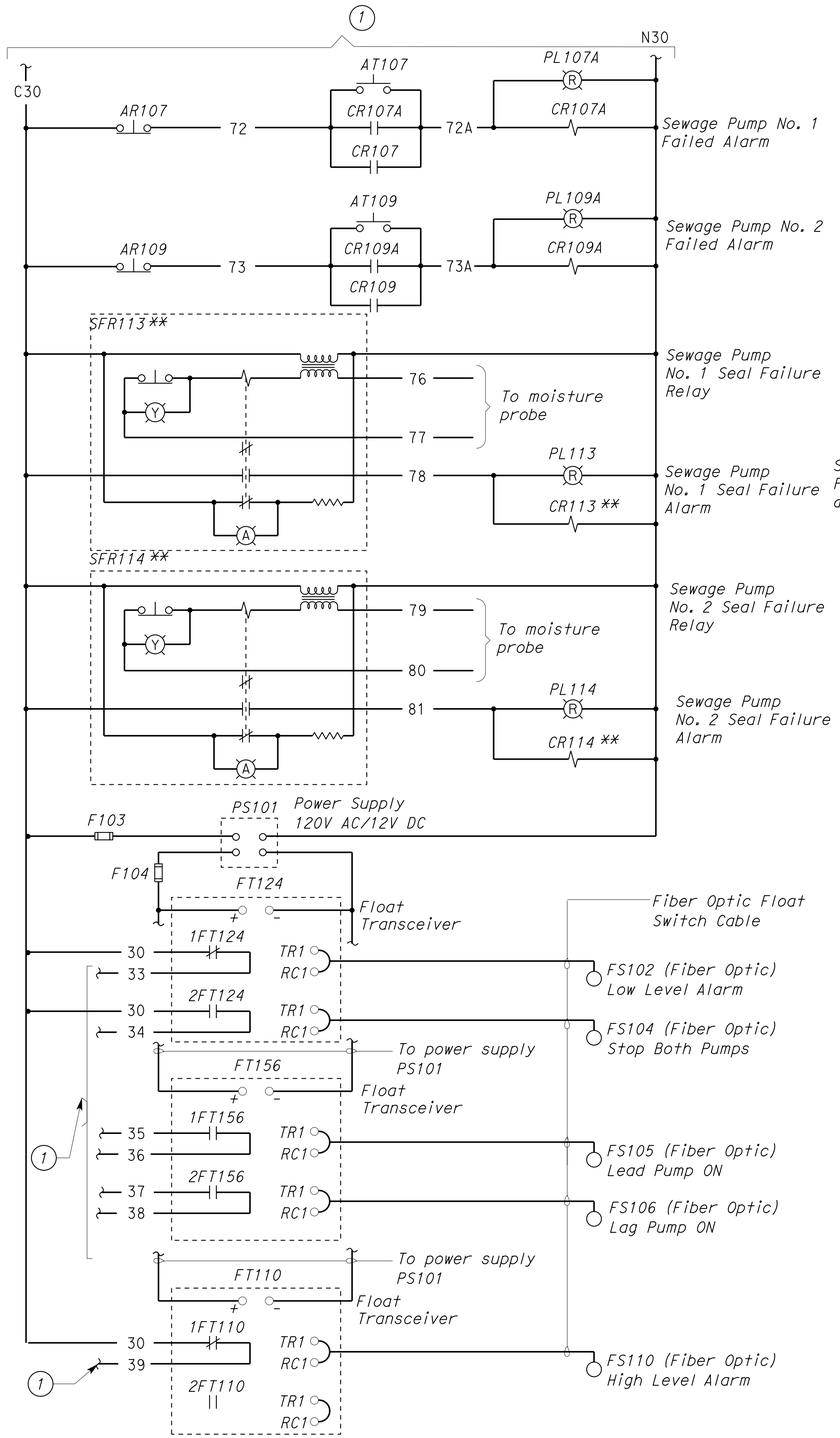

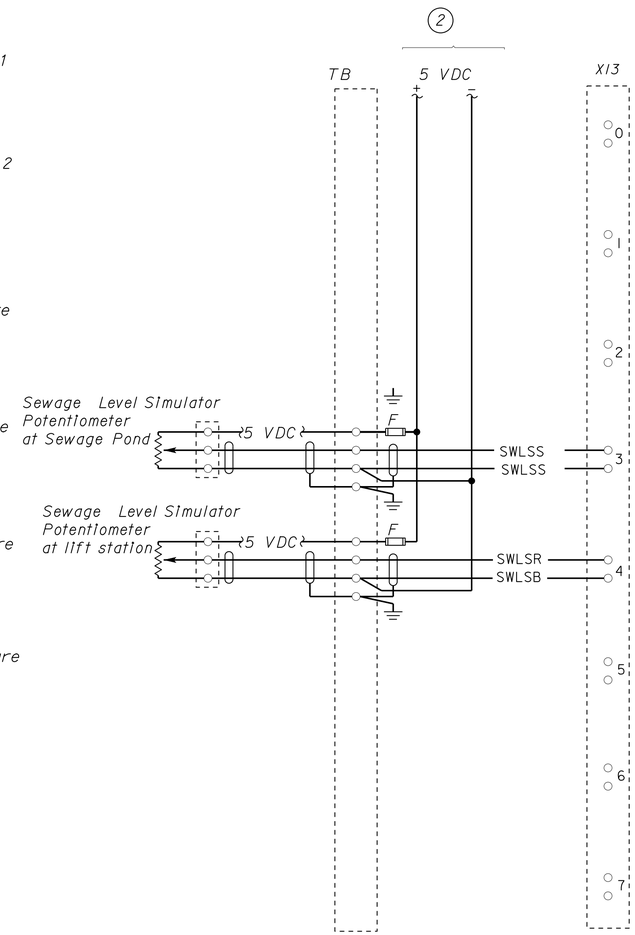

C PLC ANALOG INPUT MODULES 2

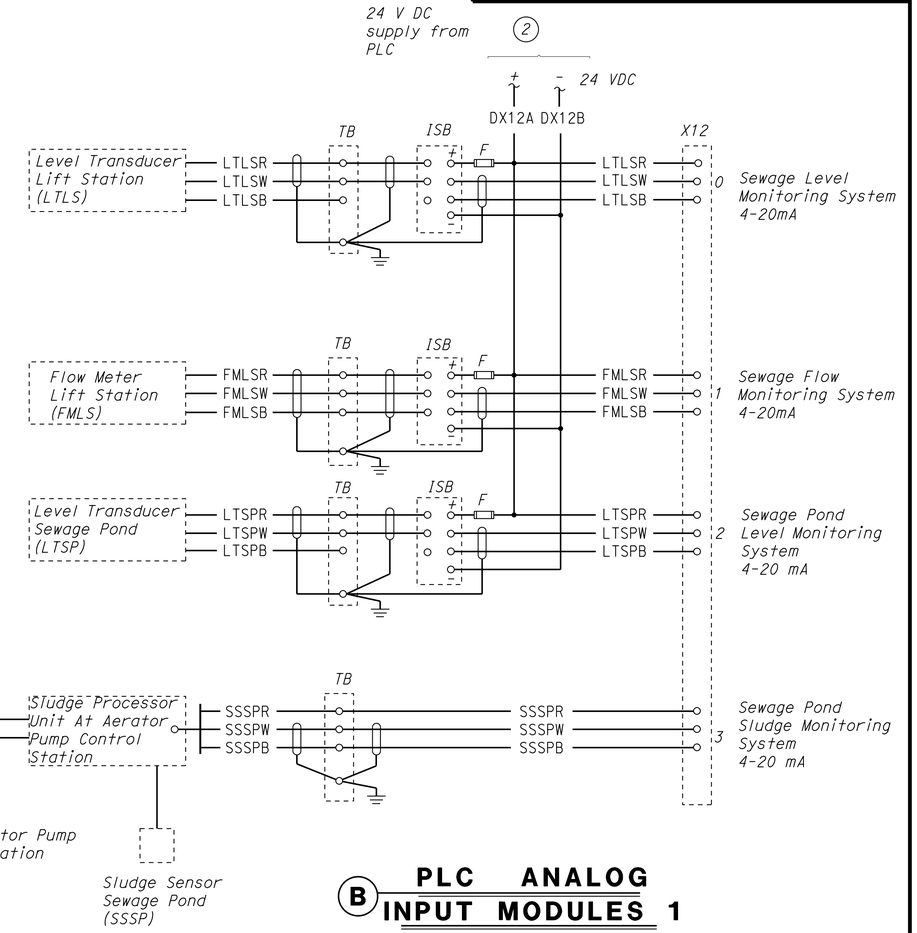

B PLC ANALOG INPUT MODULES 1

Note:

(1) For continuation, see Sewage Pump Control Station Control Schematic 1, on sheet EE4-5.9.

(2) For continuation, see sheet EE4-5.8.

** For connection to PLC see, PLC Digital Input Module, on sheet EE4-5.9.

A SEWAGE PUMP CONTROL STATION CONTROL SCHEMATIC 2

	BY	CHECKED
DESIGN	Jaswinder Gill	J. S. Sandhu
DETAILS	Ed D.Tapalla 9/09	Jaswinder Gill
QUANTITIES	Jaswinder Gill	J. S. Sandhu

STATE OF CALIFORNIA DEPARTMENT OF TRANSPORTATION

DIVISION OF ENGINEERING SERVICES ELECTRICAL-MECHANICAL-WATER AND WASTEWATER DESIGN

BRIDGE NO. 540004R/L

POST MILE R107.3

C. V. KANE SAFETY ROADSIDE REST AREA REHABILITATION

STRUCTURE 4 WATER TREATMENT

SEWAGE PUMP CONTROL STATION CONTROL SCHEMATIC DIAGRAM 2

SHEET EE4-5.10

DOES SD Imperial Rev. 9/02

ORIGINAL SCALE IN INCHES FOR REDUCED PLANS 0 1 2 3

UNIT 3596

PROJECT NUMBER & PHASE 08000002291

DISREGARD PRINTS BEARING EARLIER REVISION DATES

REVISION DATES (PRELIMINARY STAGE ONLY) 9/8/09 04/05/10 5/24/10 10/28/10 01/28/11 11/4/11 1/3/12 8/15/13

SHEET OF

18-SEP-2013 12:41

ee4_5_10.dgn

DIST.	COUNTY	ROUTE	POST MILES TOTAL PROJECT	SHEET NO.	TOTAL SHEETS
03, 08	Sac, SBd	5, 15	23.3, R107.3	269	330

Jaswinder S Gill
REGISTERED ELECTRICAL ENGINEER — 08-15-13 DATE

REGISTERED PROFESSIONAL ENGINEER — JASWINDER GILL — No. 18551 — Exp. 12-31-14 — ELEC — STATE OF CALIFORNIA

9-16-13
PLANS APPROVAL DATE

The State of California or its officers or agents shall not be responsible for the accuracy or completeness of electronic copies of this plan sheet.

CALIFORNIA STATE FIRE MARSHAL APPROVED
Approval of this plan does not authorize or approve any omission or deviation from applicable regulations. Final approval is subject to field inspection. One set of approved plans shall be available on the project site at all times.
Reviewed by: FRANCIS SOLICH
Approval date: 09-11-13

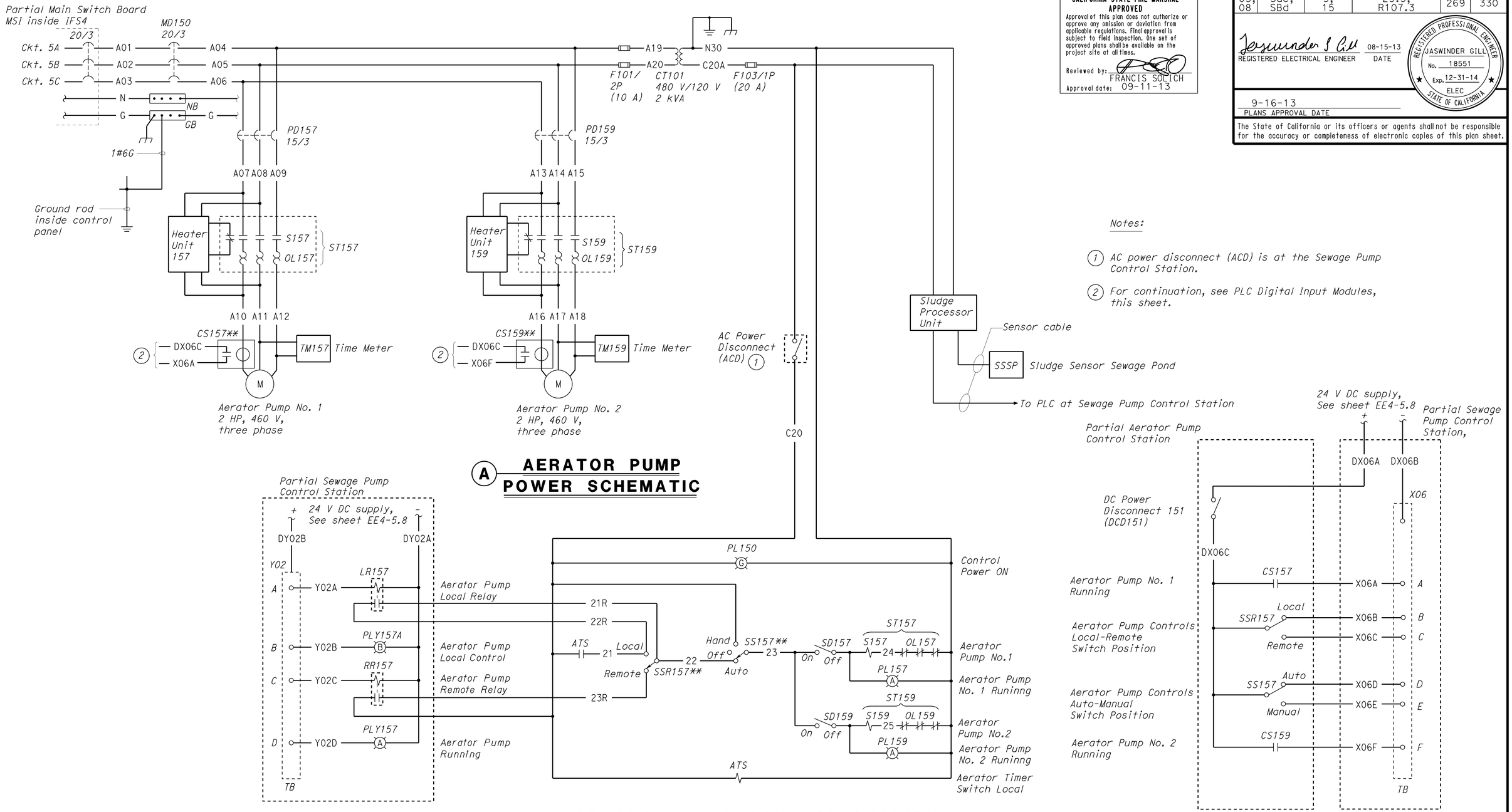

DESIGN	BY Jaswinder Gill	CHECKED J. S. Sandhu	
DETAILS	BY Ed D.Tapalla 9/09	CHECKED Jaswinder Gill	
QUANTITIES	BY Jaswinder Gill	CHECKED J. S. Sandhu	

STATE OF CALIFORNIA
DEPARTMENT OF TRANSPORTATION

DIVISION OF ENGINEERING SERVICES
ELECTRICAL-MECHANICAL-WATER AND WASTEWATER DESIGN

BRIDGE NO. 540004R/L
POST MILE R107.3

C. V. KANE
SAFETY ROADSIDE REST AREA REHABILITATION
STRUCTURE 4 WATER TREATMENT
AERATOR PUMP CONTROL STATION SCHEMATIC DIAGRAM

SHEET EE4-5.11

DOES SD Imperial Rev. 9/02

ORIGINAL SCALE IN INCHES FOR REDUCED PLANS 0 1 2 3

UNIT 3596
PROJECT NUMBER & PHASE 08000002291

DISREGARD PRINTS BEARING EARLIER REVISION DATES → 12/17/09 02/18/10 04/05/10 6/24/10 10/25/10 01/25/11 11/4/11 1/2/12 8/15/13

REVISION DATES (PRELIMINARY STAGE ONLY) SHEET OF

18-SEP-2013 12:41

ee4_5_11.dgn

DIST.	COUNTY	ROUTE	POST MILES TOTAL PROJECT	SHEET NO.	TOTAL SHEETS
03, 08	Sac, SBd	5, 15	23.3, R107.3	270	330

REGISTERED ELECTRICAL ENGINEER — 08-15-13 DATE

REGISTERED PROFESSIONAL ENGINEER — JASWINDER GILL — No. 18551 — Exp. 12-31-14 — ELEC — STATE OF CALIFORNIA

9-16-13
PLANS APPROVAL DATE

The State of California or its officers or agents shall not be responsible for the accuracy or completeness of electronic copies of this plan sheet.

CALIFORNIA STATE FIRE MARSHAL APPROVED

Approval of this plan does not authorize or approve any omission or deviation from applicable regulations. Final approval is subject to field inspection. One set of approved plans shall be available on the project site at all times.

Reviewed by: FRANCIS SOLICH
Approval date: 09-11-13

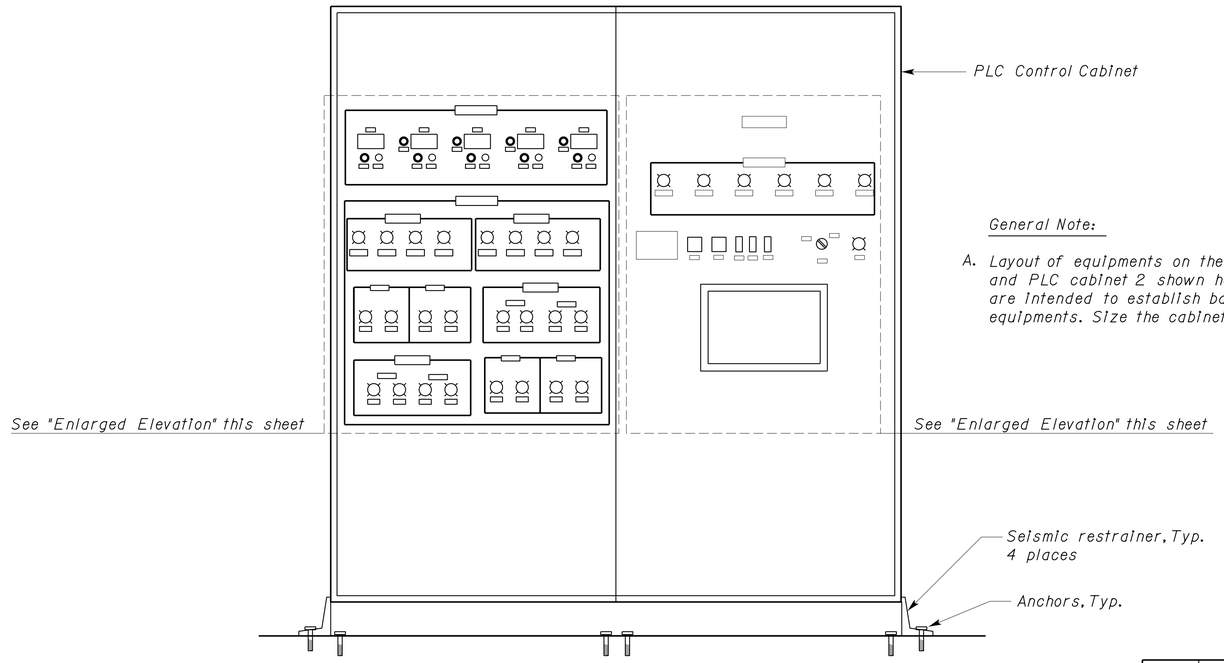

A ELEVATION
NO SCALE

General Note:

A. *Layout of equipments on the exterior of the PLC Cabinet 1 and PLC cabinet 2 shown here are diagrammatic only and are intended to establish basic location of the devices and equipments. Size the cabinets to fit all the installed components.*

WARNING PLATE SCHEDULE

TAG No.	INSCRIPTION	LETTER HEIGHT (Inch)
W1	WARNING! BEFORE SERVICING CABINET TURN "PLC DISCONNECT'S", "DC POWER SUPPLY DISCONNECTS'S", "UPS DISCONNECT AND "CONTROL AC POWER DISCONNECT" TO OFF POSITION TO DE-ENERGIZE THE PLC CABINET 1 AND 2	1/2

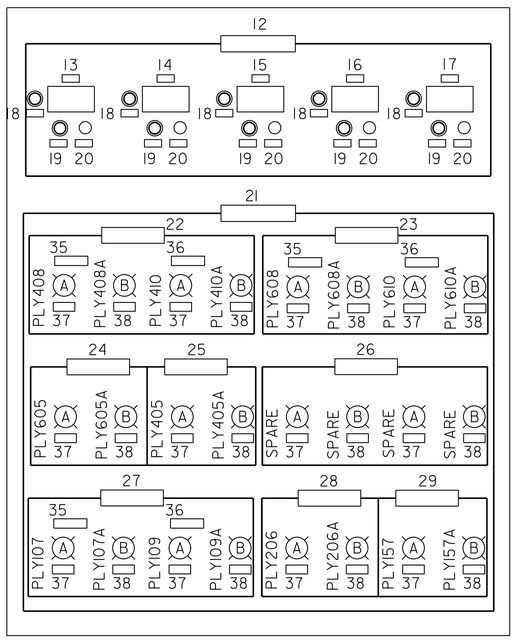

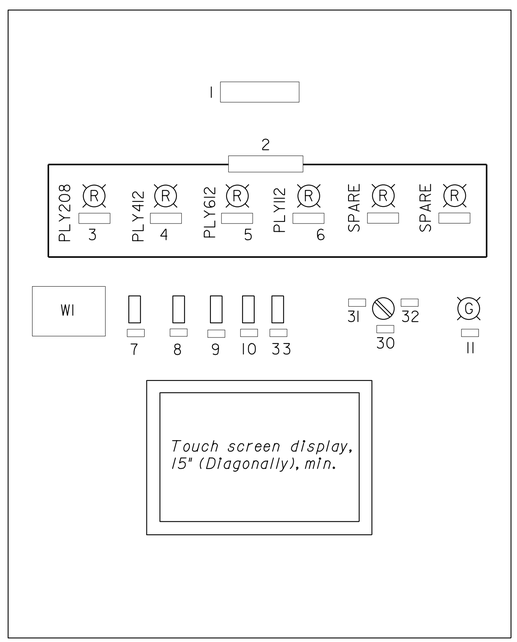

ENLARGED ELEVATION

ITEM No.	INSCRIPTION	LETTER HEIGHT (Inch)
1	PLC CONTROL CABINET	1/4
2	ALARMS	"
3	WELL PUMP	"
4	RAW WATER BOOSTER PUMPS	"
5	POTABLE WATER BOOSTER PUMPS	"
6	SEWAGE PUMPS	"
7	MAIN PLC DISCONNECT	"
8	HOT STANDBY PLC DISCONNECT	"
9	DC POWER SUPPLY 1 DISCONNECT	"
10	DC POWER SUPPLY 2 DISCONNECT	"
11	PLC POWER	"
12	DISPLAYS UNITS	"
13	RWST LEVEL	"
14	PWST LEVEL	"
15	RWPT PRESSURE	"
16	PWPT PRESSURE	"
17	SEWAGE LEVEL	"
18	SELECTOR	"
19	TEST SWITCH	"

ITEM No.	INSCRIPTION	LETTER HEIGHT (Inch)
20	SIMULATOR	1/4
21	STATUS	"
22	RWBP	"
23	PWBP	"
24	SOLENOID VALVE-SV2	"
25	SOLENOID VALVE-SV3	"
26	BLANK	"
27	SEWAGE	"
28	WELL PUMP	"
29	AERATOR PUMP	"
30	CONTROL AC POWER DISCONNECT (ACD)	"
31	ON	"
32	OFF	"
33	UPS DISCONNECT	"
34	NOT USED	"
35	PUMP NO. 1	"
36	PUMP NO. 2	"
37	ON	"
38	LOCAL	"

THIS DRAWING ACCURATE FOR ELECTRICAL WORK ONLY

	BY	CHECKED
DESIGN	Jaswinder Gill	J. S. Sandhu
DETAILS	Ed D.Tapalla 9/09	Jaswinder Gill
QUANTITIES	Jaswinder Gill	J. S. Sandhu

STATE OF CALIFORNIA
DEPARTMENT OF TRANSPORTATION

DIVISION OF ENGINEERING SERVICES
ELECTRICAL-MECHANICAL-WATER AND WASTEWATER DESIGN

BRIDGE NO. 540004R/L
POST MILE R107.3

C. V. KANE
SAFETY ROADSIDE REST AREA REHABILITATION
STRUCTURE 4 WATER TREATMENT
PLC CONTROL CABINET 1

SHEET EE4-6.1

DOES SD Imperial Rev. 9/02

ORIGINAL SCALE IN INCHES FOR REDUCED PLANS 0 1 2 3

UNIT 3596
PROJECT NUMBER & PHASE 08000002291

DISREGARD PRINTS BEARING EARLIER REVISION DATES
REVISION DATES (PRELIMINARY STAGE ONLY) 12/18/09 02/18/10 04/05/10 6/14/10 10/25/10 01/26/11 11/4/11 1/27/12 8/15/13

SHEET OF

18-SEP-2013 12:41
ee4_6_01.dgn

DIST.	COUNTY	ROUTE	POST MILES TOTAL PROJECT	SHEET NO.	TOTAL SHEETS
03, 08	Sac, SBd	5, 15	23.3, R107.3	271	330

REGISTERED ELECTRICAL ENGINEER — 08-15-13 DATE

REGISTERED PROFESSIONAL ENGINEER — JASWINDER GILL — No. 18551 — Exp. 12-31-14 — ELEC — STATE OF CALIFORNIA

9-16-13
PLANS APPROVAL DATE

The State of California or its officers or agents shall not be responsible for the accuracy or completeness of electronic copies of this plan sheet.

CALIFORNIA STATE FIRE MARSHAL APPROVED

Approval of this plan does not authorize or approve any omission or deviation from applicable regulations. Final approval is subject to field inspection. One set of approved plans shall be available on the project site at all times.

Reviewed by: FRANCIS SOLICH
Approval date: 09-11-13

General Note:

A. *Layout of equipments inside the PLC Cabinet 1 and PLC cabinet 2 shown here are diagrammatic only and are intended to establish basic location of the devices and equipments. Size the cabinets to fit all the installed components.*

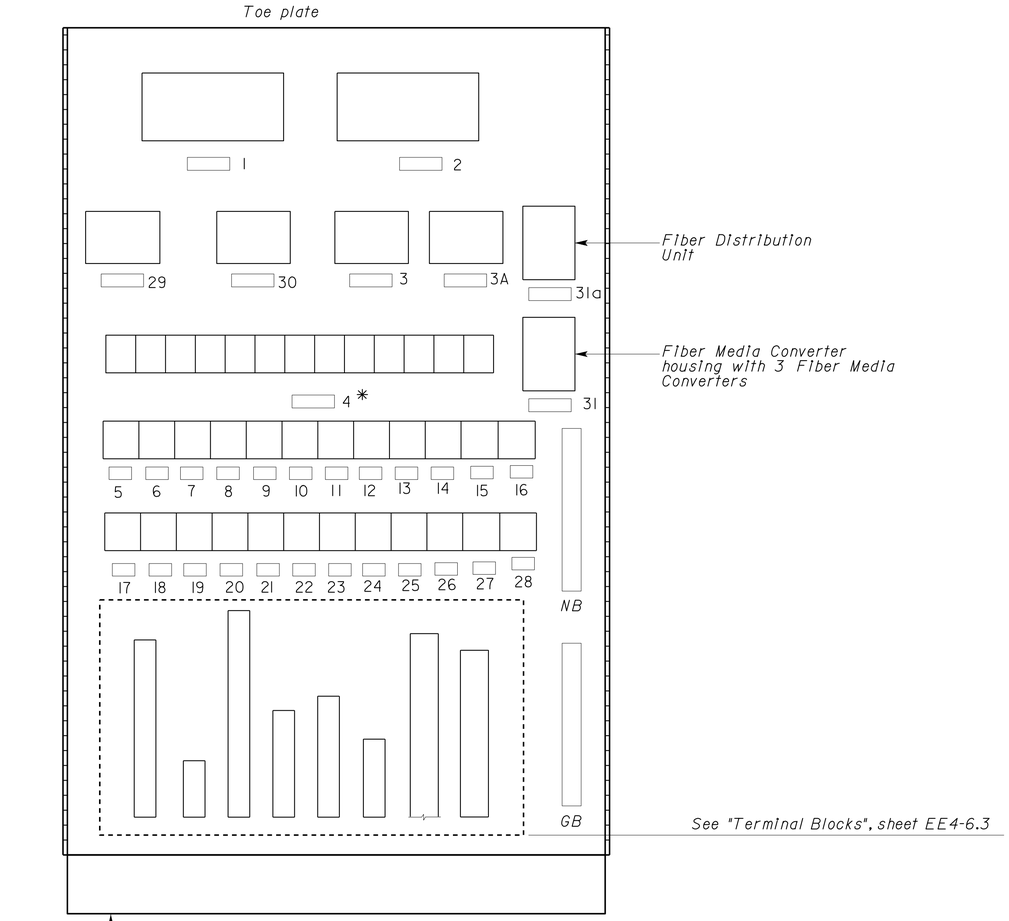

INTERIOR PANEL
(PLC Cabinet 1 and PLC Cabinet 2)

NO SCALE

* *When installed all relays shall be identified in a manner as called for on the fabrication drawings.*

ITEM No.	INSCRIPTION	LETTER HEIGHT (Inch)
1	MAIN PLC	1/4
2	HOT STANDBY PLC	"
3	DC POWER SUPPLY 1	"
3a	DC POWER SUPPLY 2	"
4	INTERPHASE RELAY	1/8
	IRI-------IRN	"
5	SPARE	"
6	SPARE	"
7	SPARE	"
8	SPARE	"
9	SPARE	"
10	SPARE	"
11	SPARE	"
12	LR206	"
13	RR206	"
14	CAR208	"
15	LR408	"
16	RR408	"
17	LR410	"
18	RR410	"
19	CAR412	"
20	LR605	"
21	RR605	"
22	LR608	"
23	RR608	"
24	LR610	"
25	RR610	"
26	CAR612	"
27	LR405	"
28	RR405	"
29	CELL MODEM	1/4
30	UPS	"
31	FIBER MEDIA CONVERTER	"
31a	FIBER DISTRIBUTION UNIT	"

NAMEPLATE SCHEDULE

THIS DRAWING ACCURATE FOR ELECTRICAL WORK ONLY

	BY	CHECKED
DESIGN	Jaswinder Gill	J. S. Sandhu
DETAILS	Ed D.Tapalla 9/09	Jaswinder Gill
QUANTITIES	Jaswinder Gill	J. S. Sandhu

STATE OF CALIFORNIA
DEPARTMENT OF TRANSPORTATION

DIVISION OF ENGINEERING SERVICES
ELECTRICAL-MECHANICAL-WATER AND WASTEWATER DESIGN

BRIDGE NO. 540004R/L
POST MILE R107.3

C. V. KANE
SAFETY ROADSIDE REST AREA REHABILITATION
STRUCTURE 4 WATER TREATMENT
PLC CONTROL CABINET 2

SHEET EE4-6.2

DOES SD Imperial Rev. 9/02

ORIGINAL SCALE IN INCHES FOR REDUCED PLANS 0 1 2 3

UNIT 3596
PROJECT NUMBER & PHASE 08000002291

DISREGARD PRINTS BEARING EARLIER REVISION DATES →
REVISION DATES (PRELIMINARY STAGE ONLY): 12/17/09 02/18/10 04/05/10 6/14/10 10/25/10 01/25/11 11/4/11 1/24/12 8/15/13

SHEET OF

18-SEP-2013 12:41

ee4_6_02.dgn

DIST.	COUNTY	ROUTE	POST MILES TOTAL PROJECT	SHEET NO.	TOTAL SHEETS
03, 08	Sac, SBd	5, 15	23.3, R107.3	272	330

CALIFORNIA STATE FIRE MARSHAL APPROVED

Approval of this plan does not authorize or approve any omission or deviation from applicable regulations. Final approval is subject to field inspection. One set of approved plans shall be available on the project site at all times.

Reviewed by: FRANCIS SOLICH

Approval date: 09-11-13

Jaswinder S Gill 08-15-13

REGISTERED ELECTRICAL ENGINEER — DATE

REGISTERED PROFESSIONAL ENGINEER — JASWINDER GILL — No. 18551 — Exp. 12-31-14 — ELEC — STATE OF CALIFORNIA

9-16-13

PLANS APPROVAL DATE

The State of California or its officers or agents shall not be responsible for the accuracy or completeness of electronic copies of this plan sheet.

General Notes:

A. *Cables/conductors terminations shown on this sheet are arbitrary and for design purpose only. Exact Cables/conductors terminations shall be strictly based upon equipment /devices selected by the contractor and approved by the Engineer.*

B. *All 120-V and low voltage terminal blocks shall be separated as shown here and no variation will be allowed.*

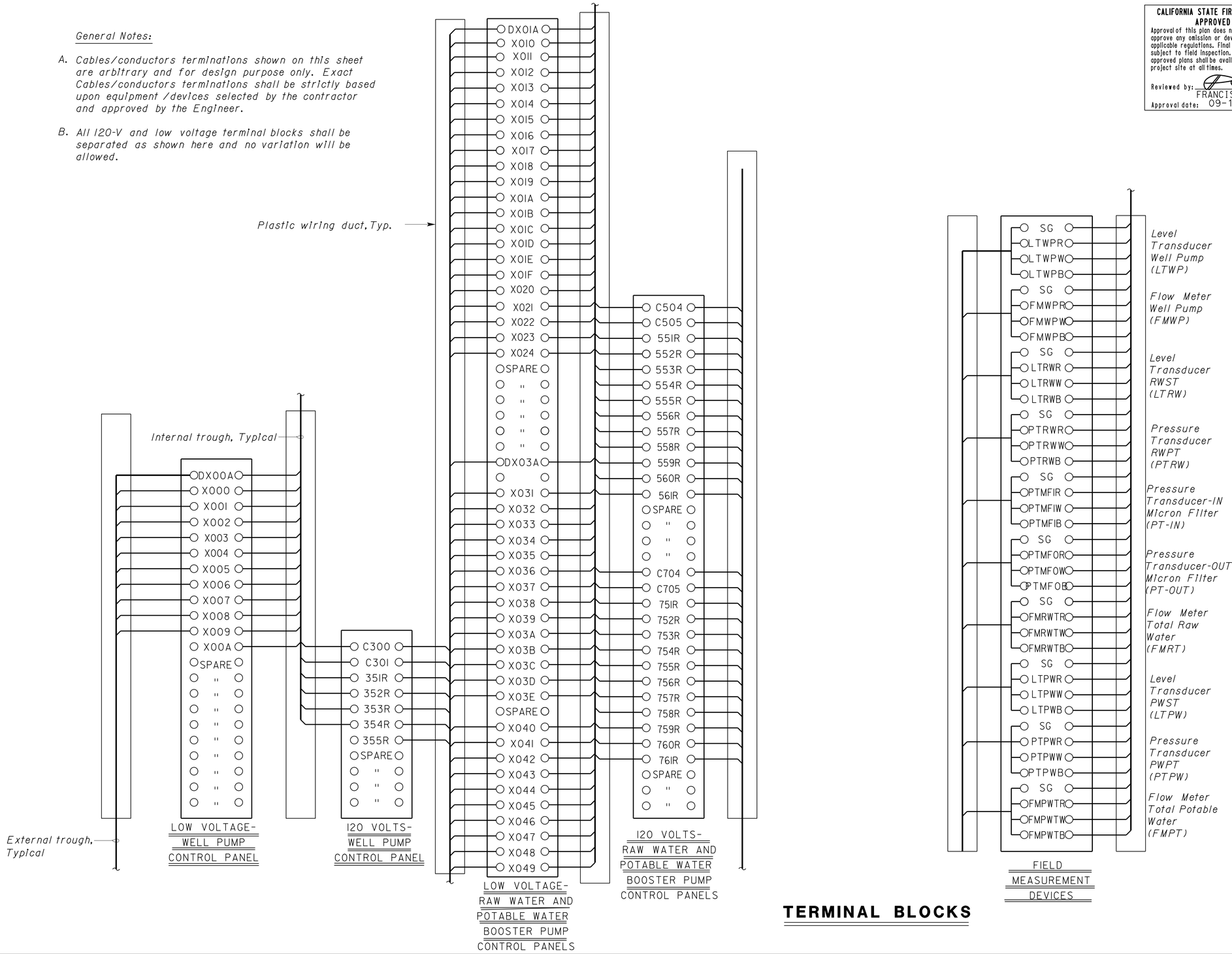

TERMINAL BLOCKS

	BY	CHECKED
DESIGN	Jaswinder Gill	J. S. Sandhu
DETAILS	Ed D.Tapalla 9/09	Jaswinder Gill
QUANTITIES	Jaswinder Gill	J. S. Sandhu

STATE OF CALIFORNIA
DEPARTMENT OF TRANSPORTATION

DIVISION OF ENGINEERING SERVICES
ELECTRICAL-MECHANICAL-WATER AND WASTEWATER DESIGN

BRIDGE NO. 540004R/L
POST MILE R107.3

C. V. KANE
SAFETY ROADSIDE REST AREA REHABILITATION
STRUCTURE 4 WATER TREATMENT
PLC CONTROL CABINET 3

SHEET EE4-6.3

DOES SD Imperial Rev. 9/02

ORIGINAL SCALE IN INCHES FOR REDUCED PLANS 0 1 2 3

UNIT 3596
PROJECT NUMBER & PHASE 08000002291

DISREGARD PRINTS BEARING EARLIER REVISION DATES →

REVISION DATES (PRELIMINARY STAGE ONLY): 12/17/09 02/18/10 04/05/10 6/14/10 10/25/10 01/25/11 11/4/11 1/2/12 8/15/13

SHEET OF

18-SEP-2013 12:41

ee4_6_03.dgn

DIST.	COUNTY	ROUTE	POST MILES TOTAL PROJECT	SHEET NO.	TOTAL SHEETS
03, 08	Sac, SBd	5, 15	23.3, R107.3	273	330

CALIFORNIA STATE FIRE MARSHAL APPROVED
Approval of this plan does not authorize or approve any omission or deviation from applicable regulations. Final approval is subject to field inspection. One set of approved plans shall be available on the project site at all times.
Reviewed by: FRANCIS SOLICH
Approval date: 09-11-13

Jaswinder S Gill 08-15-13
REGISTERED ELECTRICAL ENGINEER DATE

REGISTERED PROFESSIONAL ENGINEER JASWINDER GILL No. 18551 Exp. 12-31-14 ELEC STATE OF CALIFORNIA

9-16-13
PLANS APPROVAL DATE

The State of California or its officers or agents shall not be responsible for the accuracy or completeness of electronic copies of this plan sheet.

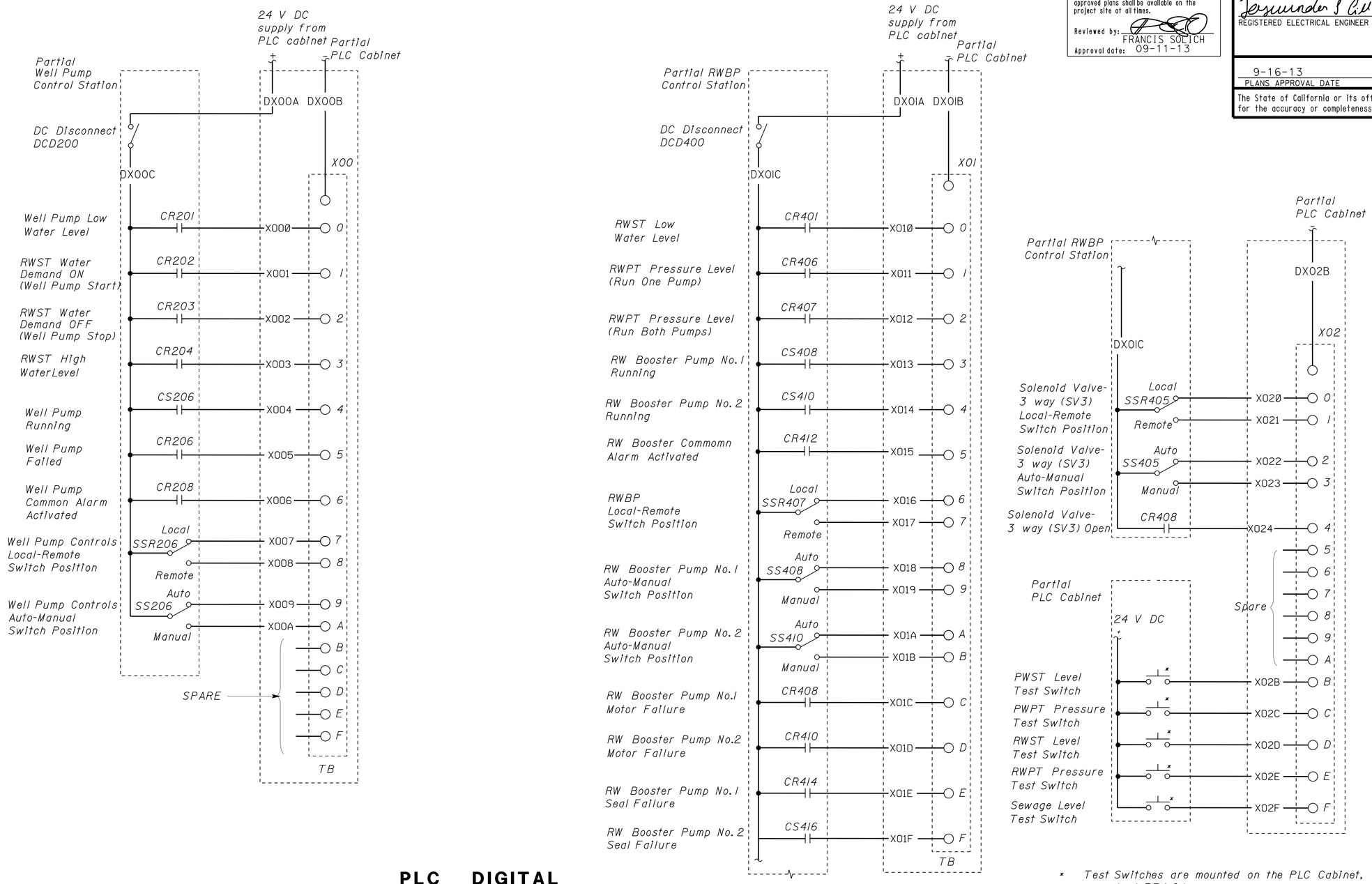

* Test Switches are mounted on the PLC Cabinet, see sheet EE4-6.1.

A PLC DIGITAL INPUT MODULES 1

DESIGN	BY Jaswinder Gill	CHECKED J. S. Sandhu
DETAILS	BY Ed D.Tapalla 9/09	CHECKED Jaswinder Gill
QUANTITIES	BY Jaswinder Gill	CHECKED J. S. Sandhu

STATE OF CALIFORNIA
DEPARTMENT OF TRANSPORTATION

DIVISION OF ENGINEERING SERVICES
ELECTRICAL-MECHANICAL-WATER AND WASTEWATER DESIGN

BRIDGE NO. 540004R/L
POST MILE R107.3

C. V. KANE
SAFETY ROADSIDE REST AREA REHABILITATION
STRUCTURE 4 WATER TREATMENT
PLC DIGITAL INPUT MODULES 1

SHEET EE4-6.4

DOES SD Imperial Rev. 9/02

ORIGINAL SCALE IN INCHES FOR REDUCED PLANS 0 1 2 3

UNIT 3596
PROJECT NUMBER & PHASE 08000002291

DISREGARD PRINTS BEARING EARLIER REVISION DATES → 12/17/09 02/18/10 04/05/10 6/14/10 10/25/10 01/25/11 11/4/11 1/26/12 8/15/13

REVISION DATES (PRELIMINARY STAGE ONLY) SHEET OF

18-SEP-2013 12:41

ee4_6_04.dgn

DIST.	COUNTY	ROUTE	POST MILES TOTAL PROJECT	SHEET NO.	TOTAL SHEETS
03, 08	Sac, SBd	5, 15	23.3, R107.3	274	330

REGISTERED ELECTRICAL ENGINEER — 08-15-13 DATE

REGISTERED PROFESSIONAL ENGINEER — JASWINDER GILL — No. 18551 — Exp. 12-31-14 — ELEC — STATE OF CALIFORNIA

9-16-13
PLANS APPROVAL DATE

The State of California or its officers or agents shall not be responsible for the accuracy or completeness of electronic copies of this plan sheet.

CALIFORNIA STATE FIRE MARSHAL APPROVED

Approval of this plan does not authorize or approve any omission or deviation from applicable regulations. Final approval is subject to field inspection. One set of approved plans shall be available on the project site at all times.

Reviewed by: FRANCIS SOLICH
Approval date: 09-11-13

General Note:

A. *Provide one additional PLC Digital Input Modules as hot standby (X05)*

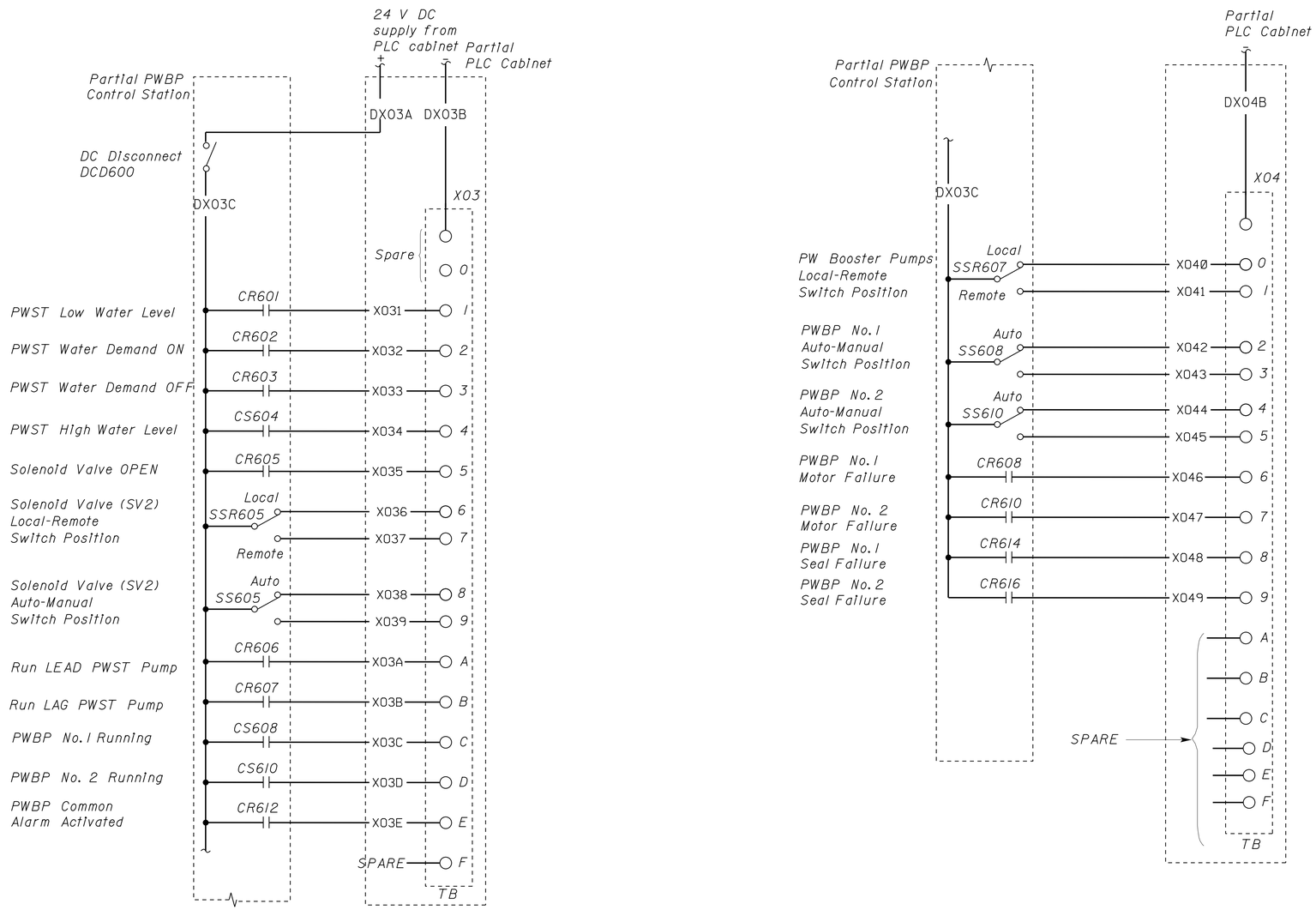

(A) PLC DIGITAL INPUT MODULES 2

	BY	CHECKED
DESIGN	Jaswinder Gill	J. S. Sandhu
DETAILS	Ed D.Tapalla 9/09	Jaswinder Gill
QUANTITIES	Jaswinder Gill	J. S. Sandhu

STATE OF CALIFORNIA
DEPARTMENT OF TRANSPORTATION

DIVISION OF ENGINEERING SERVICES
ELECTRICAL-MECHANICAL-WATER AND WASTEWATER DESIGN

BRIDGE NO. 540004R/L
POST MILE R107.3

C. V. KANE
SAFETY ROADSIDE REST AREA REHABILITATION
STRUCTURE 4 WATER TREATMENT
PLC DIGITAL INPUT MODULES 2

SHEET EE4-6.5

DOES SD Imperial Rev. 9/02

ORIGINAL SCALE IN INCHES FOR REDUCED PLANS 0 1 2 3

UNIT 3596
PROJECT NUMBER & PHASE 08000002291

DISREGARD PRINTS BEARING EARLIER REVISION DATES

REVISION DATES (PRELIMINARY STAGE ONLY): 12/17/09 02/18/10 04/05/10 6/14/10 10/28/10 01/26/11 11/4/11 1/23/12 8/15/13

SHEET OF

14-OCT-2013 09:31

ee4_6_05.dgn

DIST.	COUNTY	ROUTE	POST MILES TOTAL PROJECT	SHEET NO.	TOTAL SHEETS
03, 08	Sac, SBd	5, 15	23.3, R107.3	275	330

CALIFORNIA STATE FIRE MARSHAL APPROVED
Approval of this plan does not authorize or approve any omission or deviation from applicable regulations. Final approval is subject to field inspection. One set of approved plans shall be available on the project site at all times.
Reviewed by: FRANCIS SOLICH
Approval date: 09-11-13

Jaswinder S Gill — REGISTERED ELECTRICAL ENGINEER — 08-15-14 DATE

REGISTERED PROFESSIONAL ENGINEER — JASWINDER GILL — No. 18551 — Exp. 12-31-14 — ELEC — STATE OF CALIFORNIA

9-16-13
PLANS APPROVAL DATE

The State of California or its officers or agents shall not be responsible for the accuracy or completeness of electronic copies of this plan sheet.

General Note:

A. Provide one additional PLC Analog Input Module as hot standby (X12).

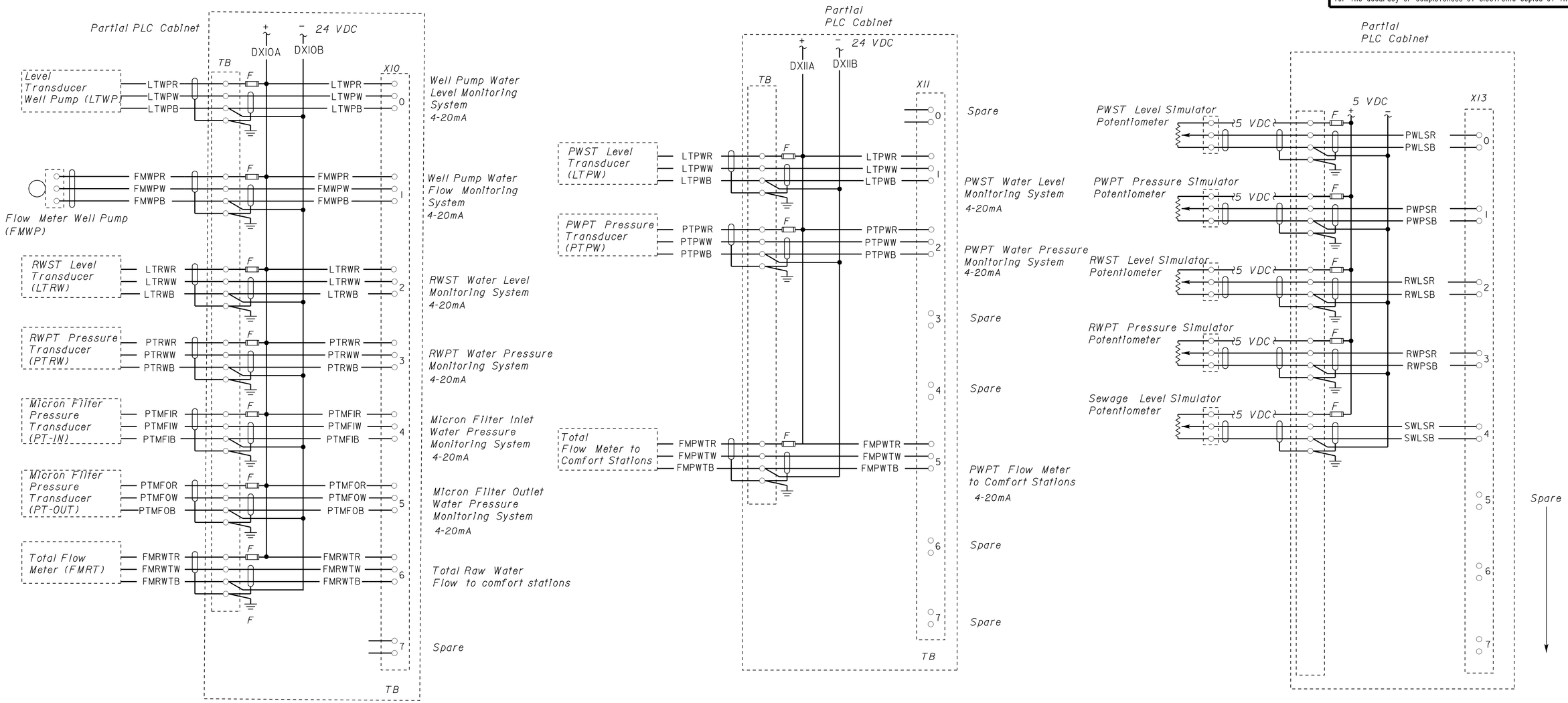

PLC ANALOG INPUT MODULES

(A)

DESIGN	BY Jaswinder Gill	CHECKED J. S. Sandhu	
DETAILS	BY Ed D.Tapalla 9/09	CHECKED Jaswinder Gill	
QUANTITIES	BY Jaswinder Gill	CHECKED J. S. Sandhu	

STATE OF CALIFORNIA
DEPARTMENT OF TRANSPORTATION

DIVISION OF ENGINEERING SERVICES
ELECTRICAL-MECHANICAL-WATER AND WASTEWATER DESIGN

BRIDGE NO. 540004R/L
POST MILE R107.3
STRUCTURE 4 WATER TREATMENT

C. V. KANE
SAFETY ROADSIDE REST AREA REHABILITATION
PLC ANALOG INPUT MODULES

SHEET EE4-6.6

DOES SD Imperial Rev. 9/02

ORIGINAL SCALE IN INCHES FOR REDUCED PLANS 0 1 2 3

UNIT 3596
PROJECT NUMBER & PHASE 08000002291

DISREGARD PRINTS BEARING EARLIER REVISION DATES → 12/17/09 02/18/10 04/05/10 6/14/10 10/25/10 01/28/11 11/4/11 1/3/12 8/15/13

REVISION DATES (PRELIMINARY STAGE ONLY) SHEET OF

19-SEP-2013 08:01

ee4_6_06.dgn

DIST.	COUNTY	ROUTE	POST MILES TOTAL PROJECT	SHEET NO.	TOTAL SHEETS
03, 08	Sac, SBd	5, 15	23.3, R107.3	276	330

Jaswinder S Gill 08-15-13
REGISTERED ELECTRICAL ENGINEER DATE

REGISTERED PROFESSIONAL ENGINEER JASWINDER GILL No. 18551 Exp. 12-31-14 ELEC STATE OF CALIFORNIA

9-16-13
PLANS APPROVAL DATE

The State of California or its officers or agents shall not be responsible for the accuracy or completeness of electronic copies of this plan sheet.

CALIFORNIA STATE FIRE MARSHAL APPROVED
Approval of this plan does not authorize or approve any omission or deviation from applicable regulations. Final approval is subject to field inspection. One set of approved plans shall be available on the project site at all times.
Reviewed by: FRANCIS SOLICH
Approval date: 09-11-13

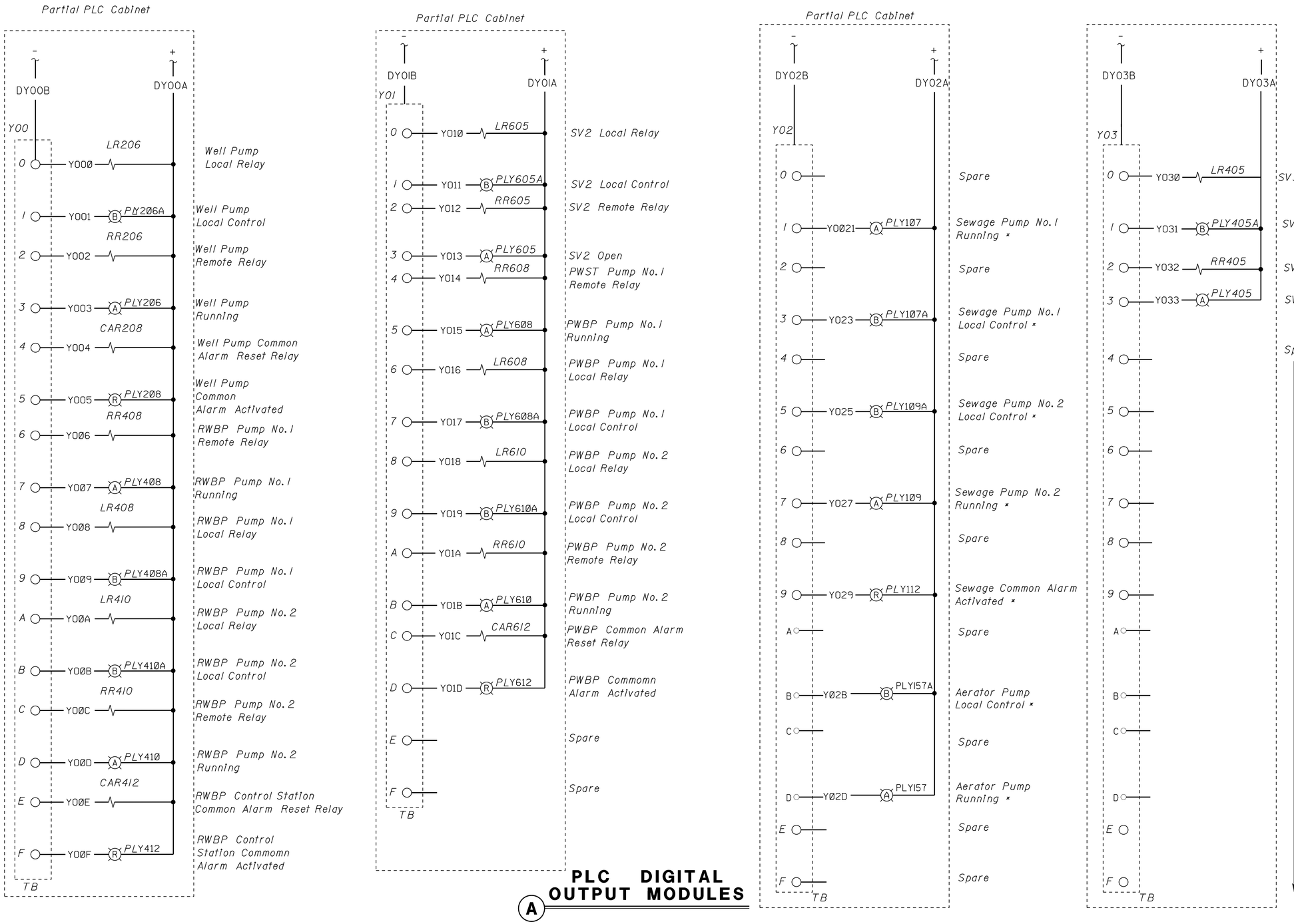

General Note:

A. Provide one additional PLC Digital Output Module as hot standby (Y05).

* These outputs are duplicated at Sewage Pump Control Station. These outputs are activated at PLC Cabinet via communication link between PLC at the PLC Cabinet inside the Water Treatment Building and PLC at the Sewage Pump Control Station.

(A) PLC DIGITAL OUTPUT MODULES

	BY	CHECKED
DESIGN	Jaswinder Gill	J. S. Sandhu
DETAILS	Ed D.Tapalla 9/09	Jaswinder Gill
QUANTITIES	Jaswinder Gill	J. S. Sandhu

STATE OF CALIFORNIA DEPARTMENT OF TRANSPORTATION

DIVISION OF ENGINEERING SERVICES
ELECTRICAL-MECHANICAL-WATER AND WASTEWATER DESIGN

BRIDGE NO. 540004R/L
POST MILE R107.3

C. V. KANE SAFETY ROADSIDE REST AREA REHABILITATION
STRUCTURE 4 WATER TREATMENT
PLC DIGITAL OUTPUT MODULES

SHEET EE4-6.8

DOES SD Imperial Rev. 9/02

ORIGINAL SCALE IN INCHES FOR REDUCED PLANS 0 1 2 3

UNIT 3596
PROJECT NUMBER & PHASE 08000002291

DISREGARD PRINTS BEARING EARLIER REVISION DATES
REVISION DATES (PRELIMINARY STAGE ONLY) 12/17/09 02/18/10 04/05/10 5/24/10 10/25/10 01/25/11 11/4/11 1/27/12 8/15/13
SHEET OF

19-SEP-2013 08:01
ee4_6_08.dgn

DIST.	COUNTY	ROUTE	POST MILES TOTAL PROJECT	SHEET NO.	TOTAL SHEETS
03, 08	Sac, SBd	5, 15	23.3, R107.3	277	330

CALIFORNIA STATE FIRE MARSHAL APPROVED
Approval of this plan does not authorize or approve any omission or deviation from applicable regulations. Final approval is subject to field inspection. One set of approved plans shall be available on the project site at all times.
Reviewed by: FRANCIS SOLICH
Approval date: 09-11-13

Jaswinder S Gill — REGISTERED ELECTRICAL ENGINEER — 08-15-13 DATE

REGISTERED PROFESSIONAL ENGINEER — JASWINDER GILL — No. 18551 — Exp. 12-31-14 — ELEC — STATE OF CALIFORNIA

9-16-13
PLANS APPROVAL DATE

The State of California or its officers or agents shall not be responsible for the accuracy or completeness of electronic copies of this plan sheet.

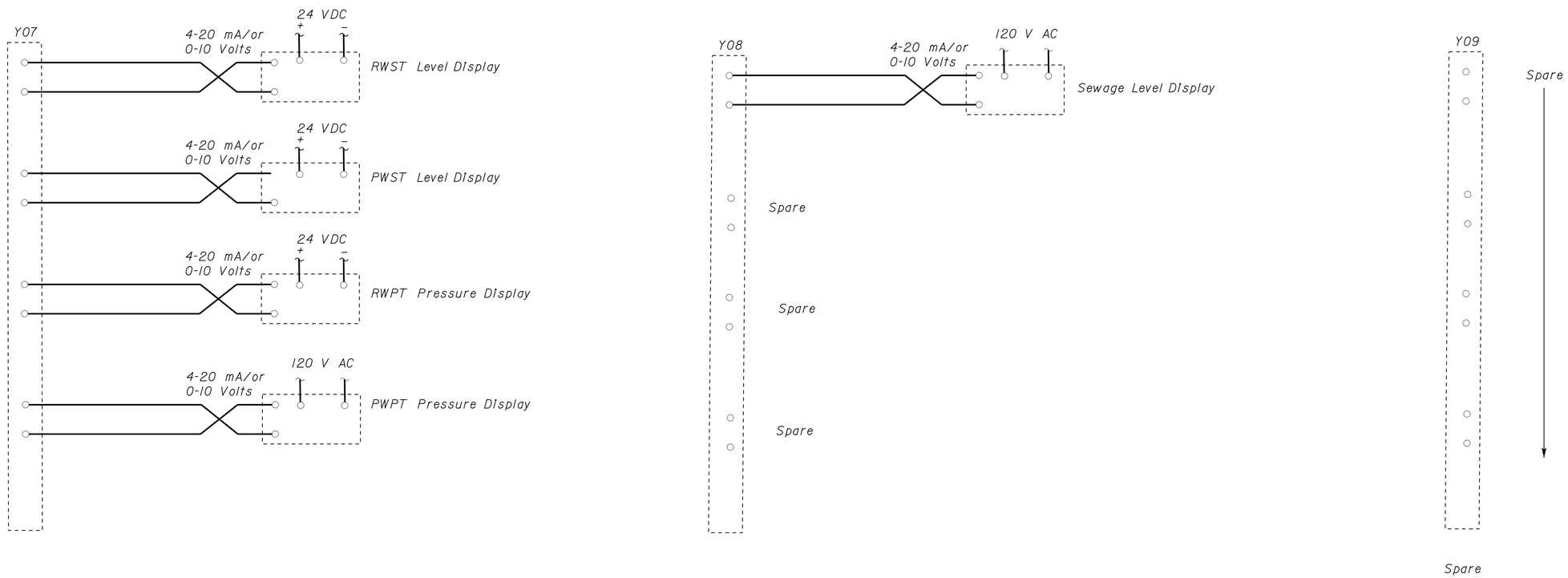

PLC ANALOG OUTPUT MODULES

(A)

DESIGN	BY Jaswinder Gill	CHECKED J. S. Sandhu
DETAILS	BY Ed D.Tapalla 9/09	CHECKED Jaswinder Gill
QUANTITIES	BY Jaswinder Gill	CHECKED J. S. Sandhu

STATE OF CALIFORNIA
DEPARTMENT OF TRANSPORTATION

DIVISION OF ENGINEERING SERVICES
ELECTRICAL-MECHANICAL-WATER AND WASTEWATER DESIGN

UNIT 3596
PROJECT NUMBER & PHASE 08000002291

BRIDGE NO. 540004R/L
POST MILE R107.3

STRUCTURE 4 WATER TREATMENT

C. V. KANE
SAFETY ROADSIDE REST AREA REHABILITATION

PLC ANALOG OUTPUT MODULES

SHEET EE4-6.9

DOES SD Imperial Rev. 9/02

ORIGINAL SCALE IN INCHES FOR REDUCED PLANS 0 1 2 3

DISREGARD PRINTS BEARING EARLIER REVISION DATES →

REVISION DATES (PRELIMINARY STAGE ONLY): 12/17/09 02/18/10 04/05/10 6/24/10 10/25/10 01/28/11 11/4/11 1/23/12 8/15/13

SHEET OF

18-SEP-2013 12:42

ee4_6_09.dgn

DIST.	COUNTY	ROUTE	POST MILES TOTAL PROJECT	SHEET NO.	TOTAL SHEETS
03, 08	Sac, SBd	5, 15	23.3, R107.3	278	330

Jaswinder S Gill 08-15-13
REGISTERED ELECTRICAL ENGINEER DATE

REGISTERED PROFESSIONAL ENGINEER JASWINDER GILL No. 18551 Exp. 12-31-14 ELEC STATE OF CALIFORNIA

9-16-13
PLANS APPROVAL DATE

The State of California or its officers or agents shall not be responsible for the accuracy or completeness of electronic copies of this plan sheet.

CALIFORNIA STATE FIRE MARSHAL APPROVED
Approval of this plan does not authorize or approve any omission or deviation from applicable regulations. Final approval is subject to field inspection. One set of approved plans shall be available on the project site at all times.
Reviewed by: FRANCIS SOLICH
Approval date: 09-11-13

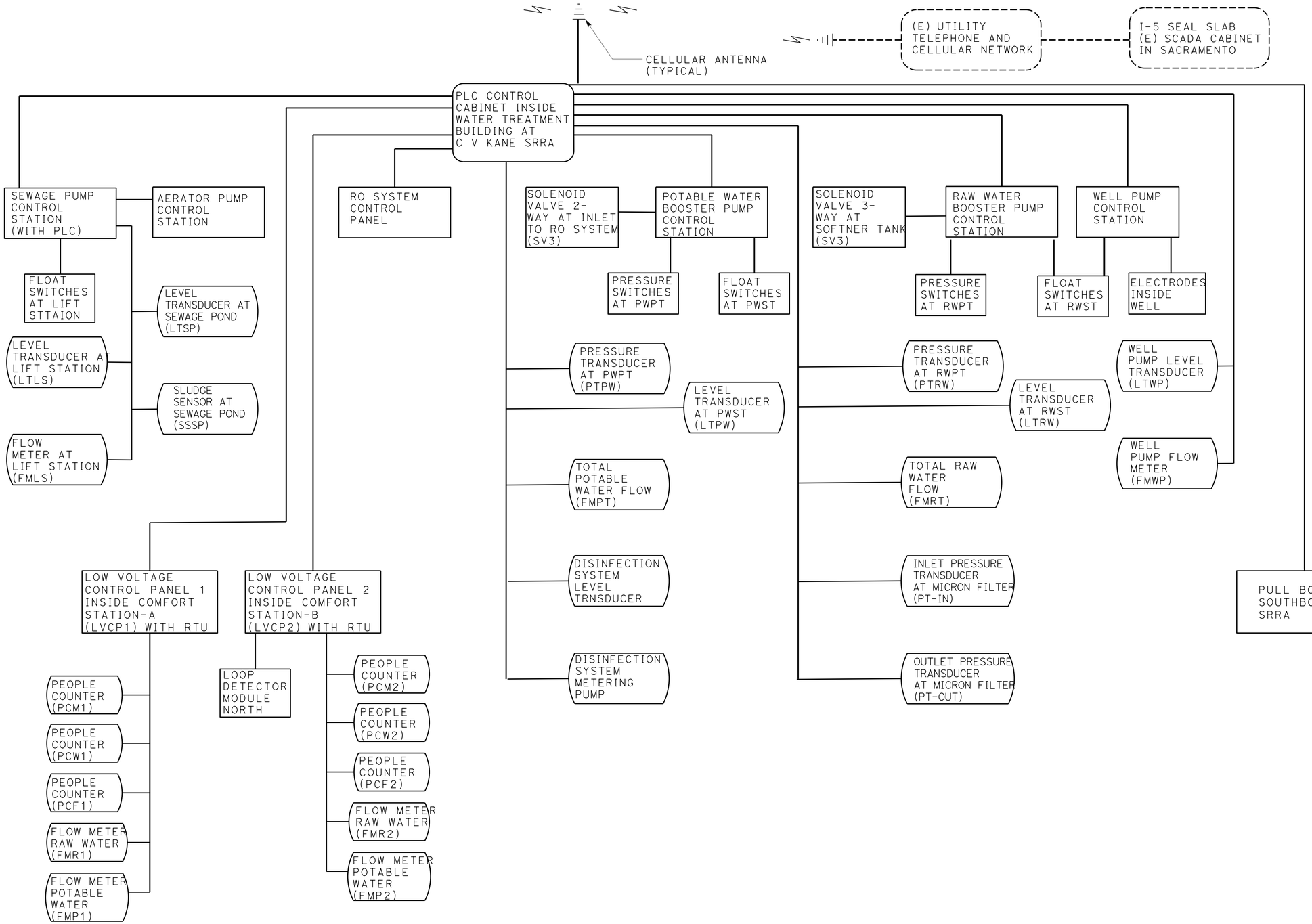

	BY	CHECKED
DESIGN	Jaswinder Gill	J. S. Sandhu
DETAILS	Ed D.Tapalla 9/09	Jaswinder Gill
QUANTITIES	Jaswinder Gill	J. S. Sandhu

STATE OF CALIFORNIA
DEPARTMENT OF TRANSPORTATION

DIVISION OF ENGINEERING SERVICES
ELECTRICAL-MECHANICAL-WATER AND WASTEWATER DESIGN

BRIDGE NO. 540004R/L
POST MILE R107.3

C. V. KANE SAFETY ROADSIDE REST AREA REHABILITATION
STRUCTURE 4 WATER TREATMENT
PLC INTERCONNECTION DIAGRAM

SHEET EE4-6.10

DOES SD Imperial Rev. 9/02

ORIGINAL SCALE IN INCHES FOR REDUCED PLANS 0 1 2 3

UNIT 3596
PROJECT NUMBER & PHASE 08000002291

DISREGARD PRINTS BEARING EARLIER REVISION DATES →
REVISION DATES (PRELIMINARY STAGE ONLY) 12/17/09 02/18/10 04/05/10 6/14/10 10/28/10 01/26/11 11/4/11 1/24/12 8/15/13
SHEET OF

18-SEP-2013 12:42
ee4_6_10.dgn

DIST.	COUNTY	ROUTE	POST MILES TOTAL PROJECT	SHEET NO.	TOTAL SHEETS
03, 08	Sac, SBd	5, 15	23.3, R107.3	279	330

Jaswinder S Gill 08-15-13
REGISTERED ELECTRICAL ENGINEER DATE

REGISTERED PROFESSIONAL ENGINEER
JASWINDER GILL
No. 18551
Exp. 12-31-14
ELEC
STATE OF CALIFORNIA

9-16-13
PLANS APPROVAL DATE

The State of California or its officers or agents shall not be responsible for the accuracy or completeness of electronic copies of this plan sheet.

CALIFORNIA STATE FIRE MARSHAL APPROVED

Approval of this plan does not authorize or approve any omission or deviation from applicable regulations. Final approval is subject to field inspection. One set of approved plans shall be available on the project site at all times.

Reviewed by: FRANCIS SOLICH
Approval date: 09-11-13

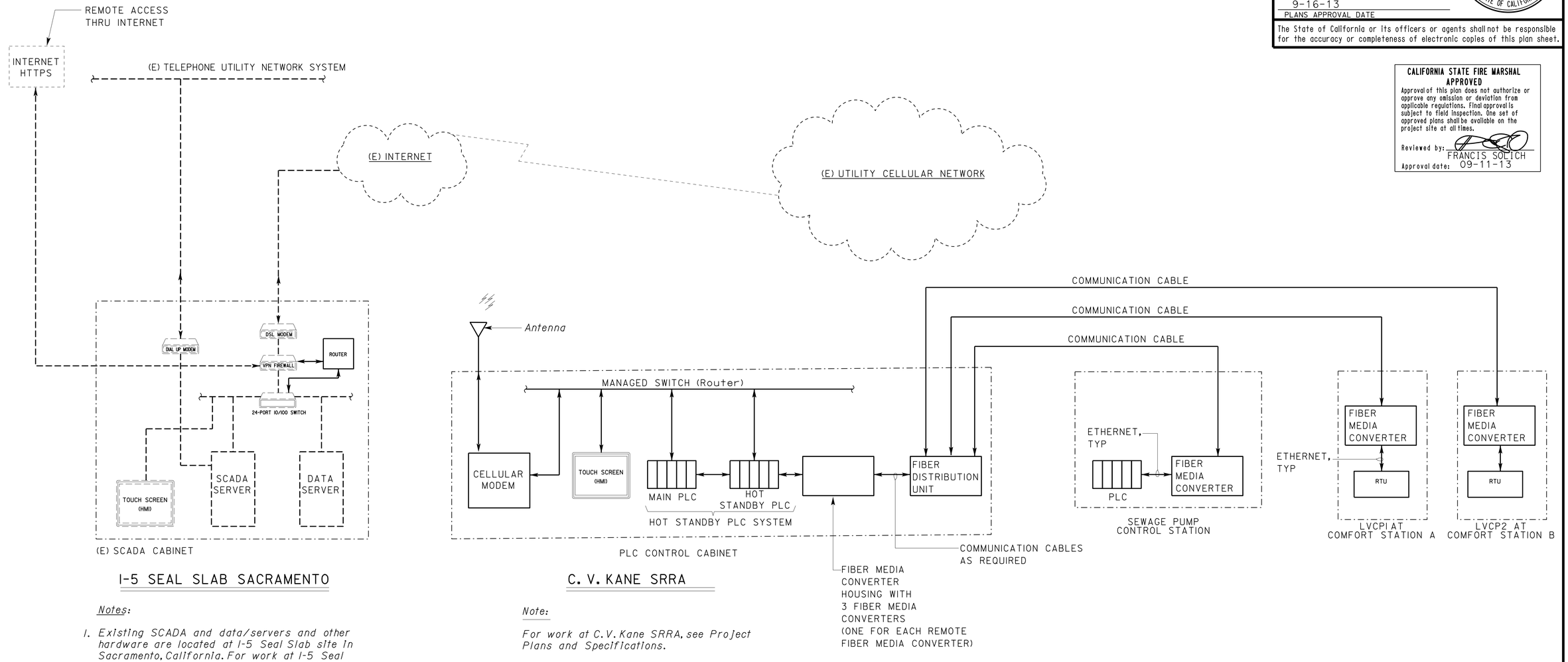

I-5 SEAL SLAB SACRAMENTO

Notes:

1. *Existing SCADA and data/servers and other hardware are located at I-5 Seal Slab site in Sacramento, California. For work at I-5 Seal Slab site, see Project Specifications. All work at seal slab will be preformed by TESCO Controls. See specification for details.*
2. *Existing SCADA system was integrated by TESCO Controls of Sacramento, California.*

C. V. KANE SRRA

Note:

For work at C.V. Kane SRRA, see Project Plans and Specifications.

COMMUNICATION AND NETWORKING DIAGRAM

	BY	CHECKED
DESIGN	Jaswinder Gill	J. S. Sandhu
DETAILS	Ed D.Tapalla 9/09	Jaswinder Gill
QUANTITIES	Jaswinder Gill	J. S. Sandhu

STATE OF CALIFORNIA
DEPARTMENT OF TRANSPORTATION

DIVISION OF ENGINEERING SERVICES
ELECTRICAL-MECHANICAL-WATER AND WASTEWATER DESIGN

BRIDGE NO. 540004R/L
POST MILE R107.3

C. V. KANE
SAFETY ROADSIDE REST AREA REHABILITATION
STRUCTURE 4 WATER TREATMENT
PLC COMMUNICATION DIAGRAM

SHEET EE4-6.11

DOES SD Imperial Rev. 9/02

ORIGINAL SCALE IN INCHES FOR REDUCED PLANS 0 1 2 3

UNIT 3596
PROJECT NUMBER & PHASE 08000002291

DISREGARD PRINTS BEARING EARLIER REVISION DATES

REVISION DATES (PRELIMINARY STAGE ONLY) 12/17/09 02/18/10 04/05/10 6/04/10 10/28/10 01/28/11 11/4/11 1/27/12 8/15/13

SHEET OF

18-SEP-2013 12:42

ee4_6_11.dgn

DIST.	COUNTY	ROUTE	POST MILES TOTAL PROJECT	SHEET NO.	TOTAL SHEETS
03, 08	Sac, SBd	5, 15	23.3, R107.3	280	330

REGISTERED ELECTRICAL ENGINEER — 08-15-13 DATE

REGISTERED PROFESSIONAL ENGINEER — JASWINDER GILL — No. 18551 — Exp. 12-31-14 — ELEC — STATE OF CALIFORNIA

9-16-13
PLANS APPROVAL DATE

The State of California or its officers or agents shall not be responsible for the accuracy or completeness of electronic copies of this plan sheet.

CALIFORNIA STATE FIRE MARSHAL APPROVED

Approval of this plan does not authorize or approve any omission or deviation from applicable regulations. Final approval is subject to field inspection. One set of approved plans shall be available on the project site at all times.

Reviewed by: FRANCIS SOLICH
Approval date: 09-11-13

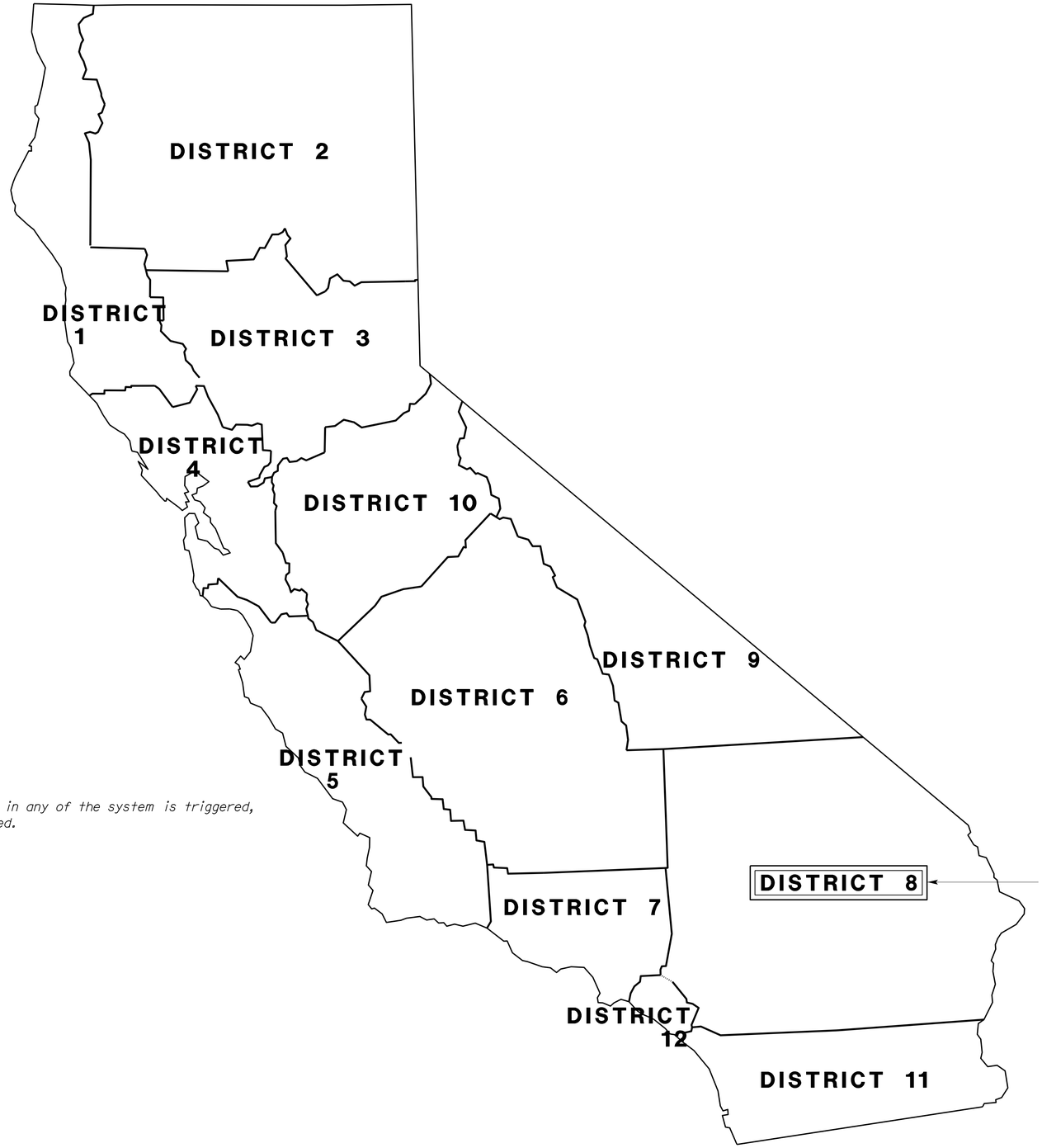

Link button to District Map

MENU: SELECT DISTRICT

- District 1
- District 2
- District 3
- District 4
- District 5
- District 6
- District 7
- District 8 - Link to District Map
- District 9
- District 10
- District 11
- District 12

General Notes:

A. When on alarm condition in any of the system is triggered, link button shall glow red.

STATE MAP

	BY	CHECKED
DESIGN	Jaswinder Gill	J. S. Sandhu
DETAILS	Andy Quan	Jaswinder Gill
QUANTITIES	Jaswinder Gill	J. S. Sandhu

STATE OF CALIFORNIA
DEPARTMENT OF TRANSPORTATION

DIVISION OF ENGINEERING SERVICES
ELECTRICAL-MECHANICAL-WATER AND WASTEWATER DESIGN

BRIDGE NO. 540004R/L
POST MILE R107.3

C. V. KANE
SAFETY ROADSIDE REST AREA REHABILITATION
SCADA MAIN DISPLAY SCREEN 1

SHEET EE4-7.1

DOES SD Imperial Rev. 9/02

ORIGINAL SCALE IN INCHES FOR REDUCED PLANS 0 1 2 3

UNIT 3596
PROJECT NUMBER & PHASE 08000002291

DISREGARD PRINTS BEARING EARLIER REVISION DATES → 10/28/10 01/28/11 11/4/11 1/3/12 8/15/13

REVISION DATES (PRELIMINARY STAGE ONLY) SHEET OF

18-SEP-2013 12:42

ee4_7_01.dgn

DIST.	COUNTY	ROUTE	POST MILES TOTAL PROJECT	SHEET NO.	TOTAL SHEETS
03, 08	Sac, SBd	5, 15	23.3, R107.3	281	330

Jaswinder S Gill 08-15-13
REGISTERED ELECTRICAL ENGINEER DATE

REGISTERED PROFESSIONAL ENGINEER
JASWINDER GILL
No. 18551
Exp. 12-31-14
ELEC
STATE OF CALIFORNIA

9-16-13
PLANS APPROVAL DATE

The State of California or its officers or agents shall not be responsible for the accuracy or completeness of electronic copies of this plan sheet.

CALIFORNIA STATE FIRE MARSHAL APPROVED

Approval of this plan does not authorize or approve any omission or deviation from applicable regulations. Final approval is subject to field inspection. One set of approved plans shall be available on the project site at all times.

Reviewed by: FRANCIS SOLICH
Approval date: 09-11-13

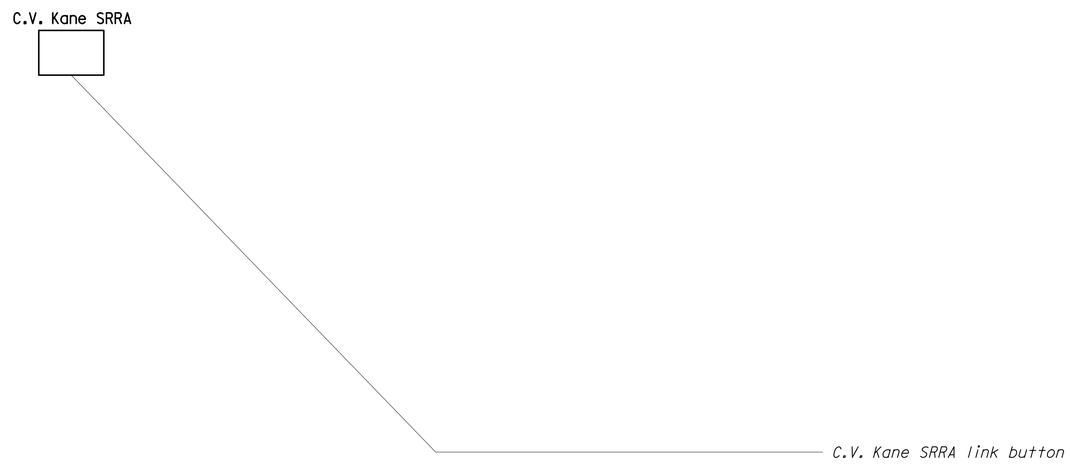

General Notes:

A. When on alarm condition in any of the system is triggered, link button shall glow red.

B. Provide a real time geographical map background for the C V Kane SRRA.

DESIGN	BY Jaswinder Gill	CHECKED J. S. Sandhu
DETAILS	BY Andy Quan	CHECKED Jaswinder Gill
QUANTITIES	BY Jaswinder Gill	CHECKED J. S. Sandhu

STATE OF CALIFORNIA
DEPARTMENT OF TRANSPORTATION

DIVISION OF ENGINEERING SERVICES
ELECTRICAL-MECHANICAL-WATER AND WASTEWATER DESIGN

BRIDGE NO. 540004R/L
POST MILE R107.3

C. V. KANE
SAFETY ROADSIDE REST AREA REHABILITATION
SCADA MAIN DISPLAY SCREEN 2

SHEET **EE4-7.2**

DOES SD Imperial Rev. 9/02

ORIGINAL SCALE IN INCHES FOR REDUCED PLANS 0 1 2 3

UNIT 3596
PROJECT NUMBER & PHASE 08000002291

DISREGARD PRINTS BEARING EARLIER REVISION DATES → 10/28/10 01/28/11 11/4/11 12/2/12 8/15/13

REVISION DATES (PRELIMINARY STAGE ONLY) SHEET OF

18-SEP-2013 12:42

ee4_7_02.dgn

DIST.	COUNTY	ROUTE	POST MILES TOTAL PROJECT	SHEET NO.	TOTAL SHEETS
03, 08	Sac, SBd	5, 15	23.3, R107.3	282	330

CALIFORNIA STATE FIRE MARSHAL
APPROVED
Approval of this plan does not authorize or approve any omission or deviation from applicable regulations. Final approval is subject to field inspection. One set of approved plans shall be available on the project site at all times.
Reviewed by: FRANCIS SOLICH
Approval date: 09-11-13

Jaswinder S Gill
REGISTERED ELECTRICAL ENGINEER
08-15-13
DATE

REGISTERED PROFESSIONAL ENGINEER
JASWINDER GILL
No. 18551
Exp. 12-31-14
ELEC
STATE OF CALIFORNIA

9-16-13
PLANS APPROVAL DATE

The State of California or its officers or agents shall not be responsible for the accuracy or completeness of electronic copies of this plan sheet.

SELECT SYSTEM:

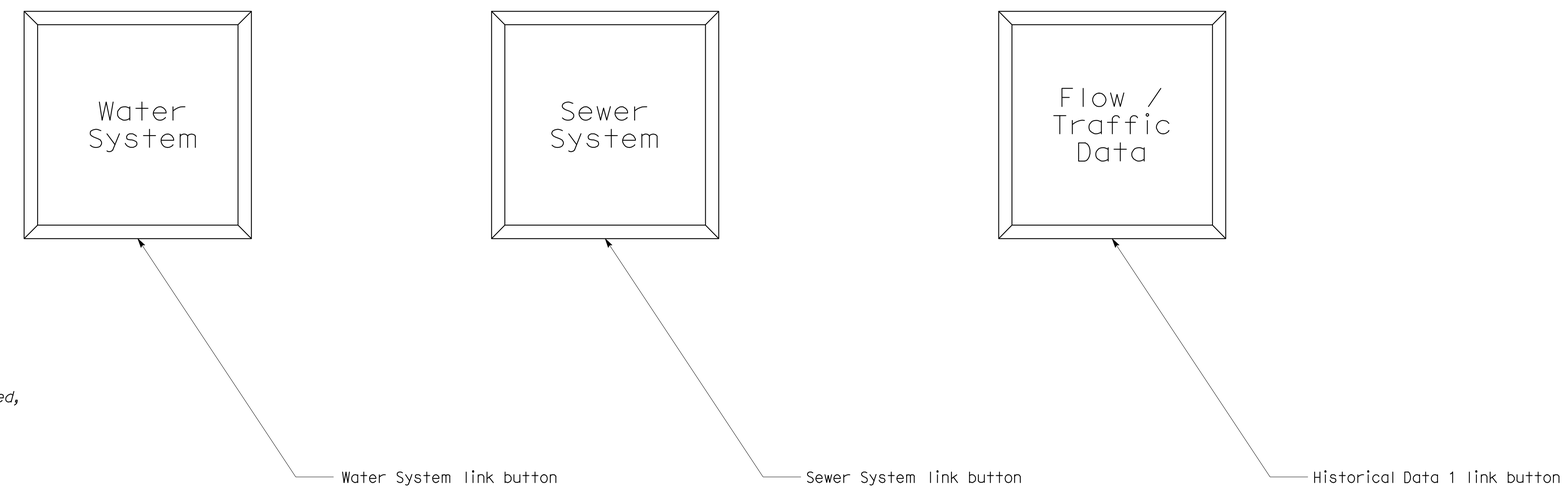

General Notes:

A. When on alarm condition in any of the system is triggered, link button shall glow RED.

B. Page background color shall be WHITE.

DESIGN	BY Jaswinder Gill	CHECKED J. S. Sandhu
DETAILS	BY Andy Quan	CHECKED Jaswinder Gill
QUANTITIES	BY Jaswinder Gill	CHECKED J. S. Sandhu

STATE OF CALIFORNIA
DEPARTMENT OF TRANSPORTATION

DIVISION OF ENGINEERING SERVICES
ELECTRICAL-MECHANICAL-WATER AND WASTEWATER DESIGN

BRIDGE NO. 540004R/L
POST MILE R107.3

C. V. KANE
SAFETY ROADSIDE REST AREA REHABILITATION
SYSTEM SELECTION SCREENSHOT

SHEET EE4-7.3

DOES SD Imperial Rev. 9/02

ORIGINAL SCALE IN INCHES FOR REDUCED PLANS 0 1 2 3

UNIT 3596
PROJECT NUMBER & PHASE 08000002291

DISREGARD PRINTS BEARING EARLIER REVISION DATES →
REVISION DATES (PRELIMINARY STAGE ONLY) 10/29/10 01/28/11 11/4/11 1/27/12 8/15/13
SHEET OF

18-SEP-2013 12:42
ee4_7_03.dgn

DIST.	COUNTY	ROUTE	POST MILES TOTAL PROJECT	SHEET NO.	TOTAL SHEETS
03, 08	Sac, SBd	5, 15	23.3, R107.3	283	330

CALIFORNIA STATE FIRE MARSHAL APPROVED
Approval of this plan does not authorize or approve any omission or deviation from applicable regulations. Final approval is subject to field inspection. One set of approved plans shall be available on the project site at all times.
Reviewed by: FRANCIS SOLICH
Approval date: 09-11-13

Jaswinder S Gill 08-15-13
REGISTERED ELECTRICAL ENGINEER DATE

REGISTERED PROFESSIONAL ENGINEER JASWINDER GILL No. 18551 Exp. 12-31-14 ELEC STATE OF CALIFORNIA

9-16-13
PLANS APPROVAL DATE

The State of California or its officers or agents shall not be responsible for the accuracy or completeness of electronic copies of this plan sheet.

SELECT PROCESS:

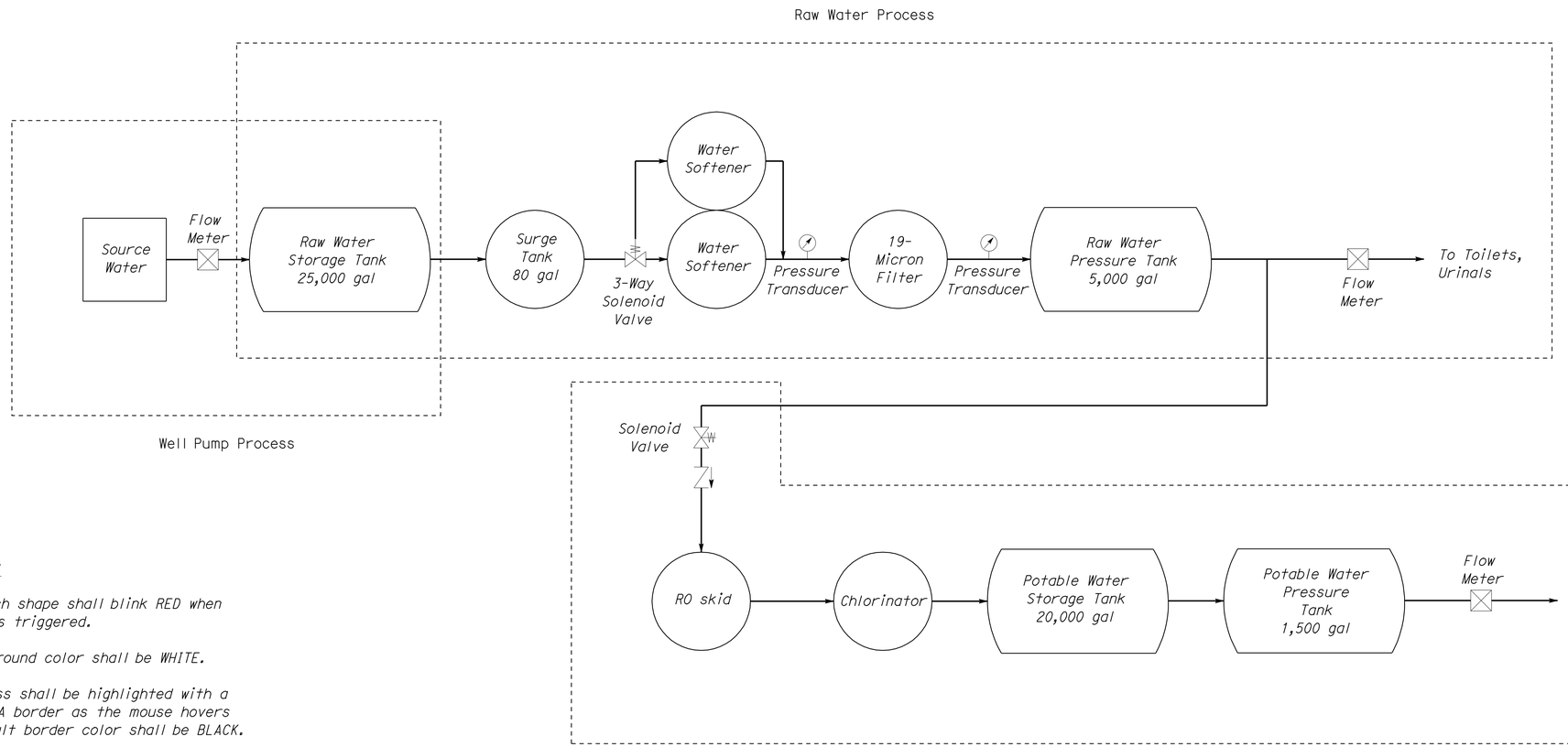

General Notes:

A. Text in each shape shall blink RED when its alarm is triggered.

B. Page background color shall be WHITE.

C. Each process shall be highlighted with a bold MAGENTA border as the mouse hovers on it. Default border color shall be BLACK.

	BY	CHECKED
DESIGN	Jaswinder Gill	J. S. Sandhu
DETAILS	Andy Quan	Jaswinder Gill
QUANTITIES	Jaswinder Gill	J. S. Sandhu

STATE OF CALIFORNIA DEPARTMENT OF TRANSPORTATION

DIVISION OF ENGINEERING SERVICES
ELECTRICAL-MECHANICAL-WATER AND WASTEWATER DESIGN

BRIDGE NO. 540004R/L
POST MILE R107.3

C. V. KANE
SAFETY ROADSIDE REST AREA REHABILITATION
WATER SYSTEM SCREENSHOT

SHEET EE4-7.4

DOES SD Imperial Rev. 9/02

ORIGINAL SCALE IN INCHES FOR REDUCED PLANS 0 1 2 3

UNIT 3596
PROJECT NUMBER & PHASE 08000002291

DISREGARD PRINTS BEARING EARLIER REVISION DATES
REVISION DATES (PRELIMINARY STAGE ONLY) 10/25/10 01/25/11 11/4/11 1/3/12 8/15/13
SHEET OF

18-SEP-2013 12:42
ee4_7_04.dgn

DIST.	COUNTY	ROUTE	POST MILES TOTAL PROJECT	SHEET NO.	TOTAL SHEETS
03, 08	Sac, SBd	5, 15	23.3, R107.3	284	330

CALIFORNIA STATE FIRE MARSHAL APPROVED

Approval of this plan does not authorize or approve any omission or deviation from applicable regulations. Final approval is subject to field inspection. One set of approved plans shall be available on the project site at all times.

Reviewed by: FRANCIS SOLICH

Approval date: 09-11-13

Jaswinder S Gill — 08-15-13

REGISTERED ELECTRICAL ENGINEER — DATE

REGISTERED PROFESSIONAL ENGINEER — JASWINDER GILL — No. 18551 — Exp. 12-31-14 — ELEC — STATE OF CALIFORNIA

9-16-13

PLANS APPROVAL DATE

The State of California or its officers or agents shall not be responsible for the accuracy or completeness of electronic copies of this plan sheet.

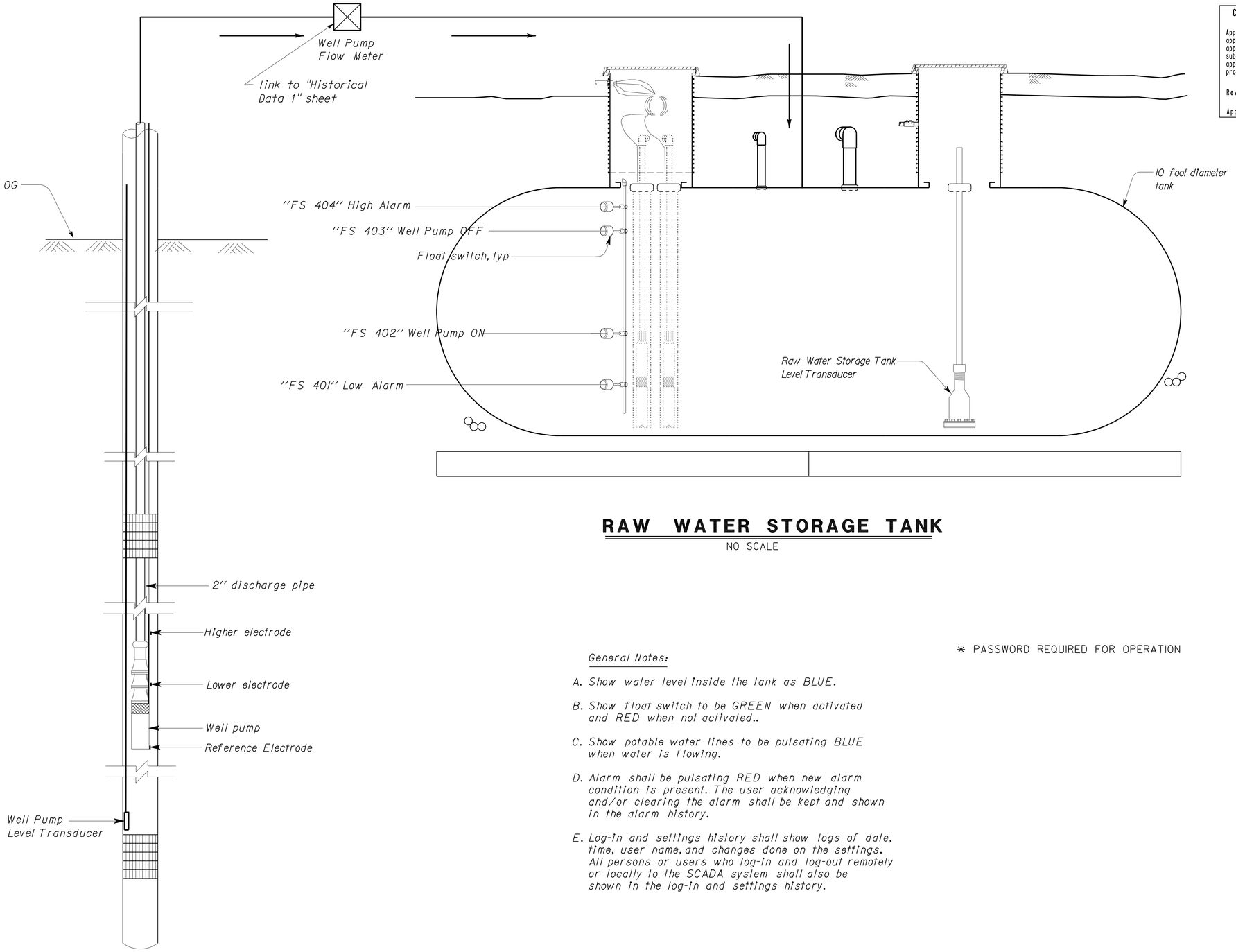

RAW WATER STORAGE TANK

NO SCALE

WELL PUMP

General Notes:

A. *Show water level inside the tank as BLUE.*

B. *Show float switch to be GREEN when activated and RED when not activated..*

C. *Show potable water lines to be pulsating BLUE when water is flowing.*

D. *Alarm shall be pulsating RED when new alarm condition is present. The user acknowledging and/or clearing the alarm shall be kept and shown in the alarm history.*

E. *Log-in and settings history shall show logs of date, time, user name, and changes done on the settings. All persons or users who log-in and log-out remotely or locally to the SCADA system shall also be shown in the log-in and settings history.*

✳ PASSWORD REQUIRED FOR OPERATION

WELL PUMP

STATUS

WELL PUMP	ON	○	VOLTAGE	V_{AB} ☐
	OFF	○		V_{BC} ☐
OPERATION	MANUAL	○		V_{CA} ☐
	OFF	○	CURRENT	I_A ☐
	AUTOMATIC	○		I_B ☐
CONTROLS	REMOTE	○		I_C ☐
	LOCAL	○		
RUN TIME METER		☐		

SETTINGS ✳

MANUAL OPERATION	ON/OFF	○○
WELL PUMP CONTROL STATION	REMOTE	○
	LOCAL	○
RAW WATER STORAGE TANK SET POINT (INCH ABOVE TANK FLOOR)	HIGH LEVEL	☐
	WELL PUMP OFF	☐
	WELL PUMP ON	☐
CONFIRM CHANGES		○

LOG-IN AND SETTINGS HISTORY ☐

WELL PUMP FIXED LEVEL	ELEVATION (ft) ☐	
WELL WATER LEVEL	ELEVATION (ft) ☐	FLOW (gpm) ☐
RAW WATER STORAGE TANK LEVEL	ELEVATION (ft) ☐	% VOLUME ☐

ALARM CONDITIONS AND HISTORY ☐ ALARM ☐ ✳ RESET

THIS DRAWING ACCURATE FOR ELECTRICAL WORK ONLY

	BY	CHECKED
DESIGN	Jaswinder Gill	J. S. Sandhu
DETAILS	Andy Quan	Jaswinder Gill
QUANTITIES	Jaswinder Gill	J. S. Sandhu

STATE OF CALIFORNIA
DEPARTMENT OF TRANSPORTATION

DIVISION OF ENGINEERING SERVICES
ELECTRICAL-MECHANICAL-WATER AND WASTEWATER DESIGN

BRIDGE NO. 540004R/L
POST MILE R107.3

C. V. KANE
SAFETY ROADSIDE REST AREA REHABILITATION
STRUCTURE 4 WATER TREATMENT
WELL PUMP AND RAW WATER STORAGE TANK SCREEN

SHEET EE4-7.5

DOES SD Imperial Rev. 9/02

ORIGINAL SCALE IN INCHES FOR REDUCED PLANS 0 1 2 3

UNIT 3596
PROJECT NUMBER & PHASE 08000002291

DISREGARD PRINTS BEARING EARLIER REVISION DATES → 12/17/09 02/18/10 10/28/10 01/28/11 11/4/11 1/27/12 8/15/13

REVISION DATES (PRELIMINARY STAGE ONLY) SHEET OF

18-SEP-2013 12:42

ee4_7_05.dgn

DIST.	COUNTY	ROUTE	POST MILES TOTAL PROJECT	SHEET NO.	TOTAL SHEETS
03, 08	Sac, SBd	5, 15	23.3, R107.3	285	330

Jaswinder S Gill 08-15-13
REGISTERED ELECTRICAL ENGINEER DATE

REGISTERED PROFESSIONAL ENGINEER JASWINDER GILL No. 18551 Exp. 12-31-14 ELEC STATE OF CALIFORNIA

9-16-13
PLANS APPROVAL DATE

The State of California or its officers or agents shall not be responsible for the accuracy or completeness of electronic copies of this plan sheet.

CALIFORNIA STATE FIRE MARSHAL APPROVED
Approval of this plan does not authorize or approve any omission or deviation from applicable regulations. Final approval is subject to field inspection. One set of approved plans shall be available on the project site at all times.
Reviewed by: FRANCIS SOLICH
Approval date: 09-11-13

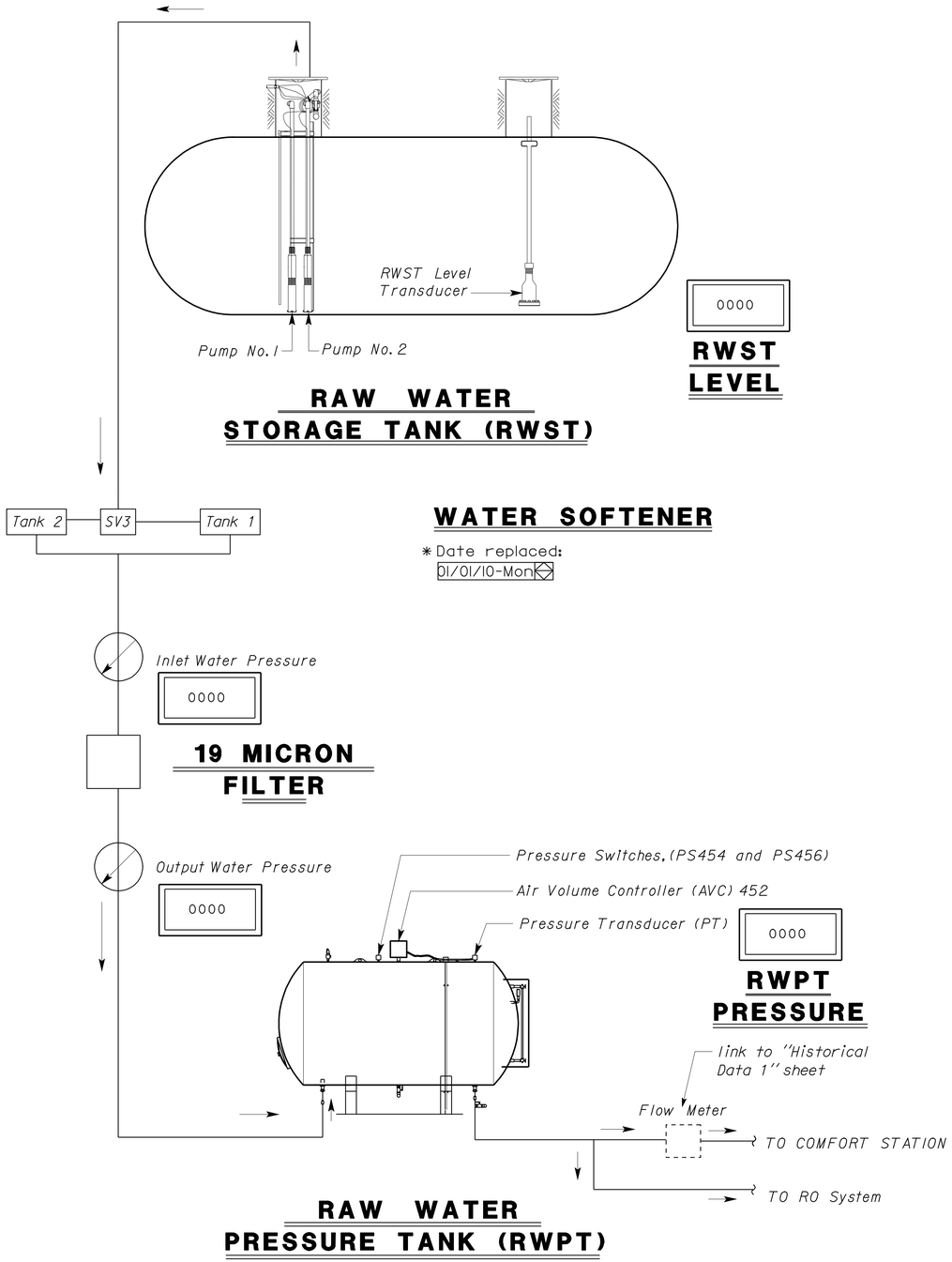

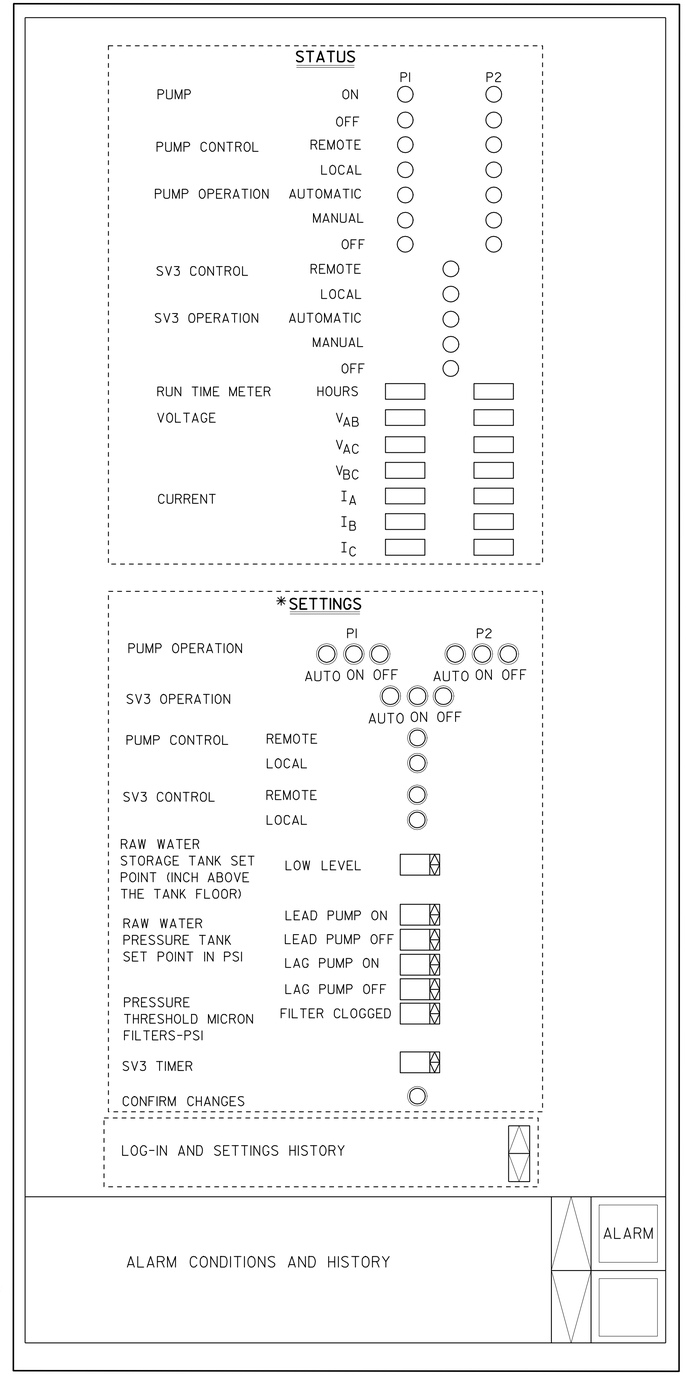

RAW WATER PUMPS SYSTEM

* PASSWORD REQUIRED FOR OPERATION
** FOR DETAILED REPORTS, SEE SHEET EE3-II

LEGEND

- STATUS INDICATION
- PUSHBUTTON
- TEXT DISPLAY
- TEXT DISPLAY WITH SCROLL UP/DOWN FUNCTION
- TEXT DISPLAY WITH DROP DOWN INFORMATION

General Notes:

A. *Show raw water lines to be pulsating BLUE when water is flowing.*

B. *Show water softener tank 1 or tank 2 to be GREEN when active.*

C. *Show water level inside the tank as BLUE.*

D. *Show booster pumps to be GREEN when running and flashing RED when in alarmed state.*

E. *Alarm shall be pulsating RED when new alarm condition is present. The user acknowledging and/or clearing the alarm shall be kept and shown in the alarm history.*

F. *Log-in and settings history shall show logs of date, time, user name, and changes done on the settings. All persons or users who log-in and log-out remotely or locally to the SCADA system shall also be shown in the log-in and settings history.*

THIS DRAWING ACCURATE FOR ELECTRICAL WORK ONLY

	BY	CHECKED
DESIGN	Jaswinder Gill	J. S. Sandhu
DETAILS	Andy Quan	Jaswinder Gill
QUANTITIES	Jaswinder Gill	J. S. Sandhu

STATE OF CALIFORNIA
DEPARTMENT OF TRANSPORTATION

DIVISION OF ENGINEERING SERVICES
ELECTRICAL-MECHANICAL-WATER AND WASTEWATER DESIGN

BRIDGE NO. 540004R/L
POST MILE R107.3
STRUCTURE 4 WATER TREATMENT

C. V. KANE
SAFETY ROADSIDE REST AREA REHABILITATION
RAW WATER PRESSURE TANK AND BOOSTER PUMPS SCREEN

SHEET EE4-7.6

DOES SD Imperial Rev. 9/02

ORIGINAL SCALE IN INCHES FOR REDUCED PLANS 0 1 2 3

UNIT 3596
PROJECT NUMBER & PHASE 08000002291

DISREGARD PRINTS BEARING EARLIER REVISION DATES →
REVISION DATES (PRELIMINARY STAGE ONLY) 12/17/09 02/18/10 6/14/10 10/25/2010 01/26/11 11/4/11 1/24/12 8/15/13
SHEET OF

18-SEP-2013 12:42
ee4_7_06.dgn

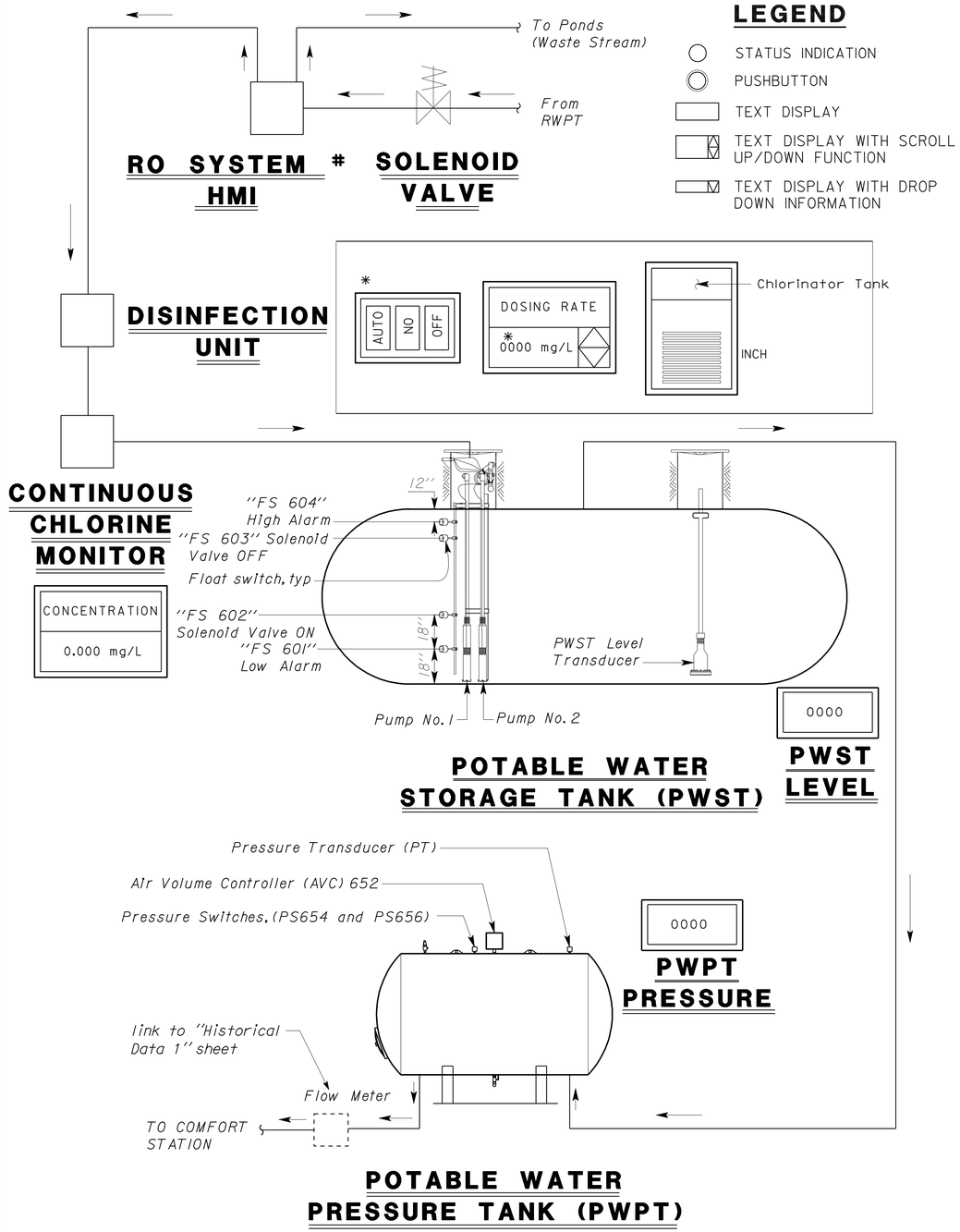

LEGEND

- STATUS INDICATION
- PUSHBUTTON
- TEXT DISPLAY
- TEXT DISPLAY WITH SCROLL UP/DOWN FUNCTION
- TEXT DISPLAY WITH DROP DOWN INFORMATION

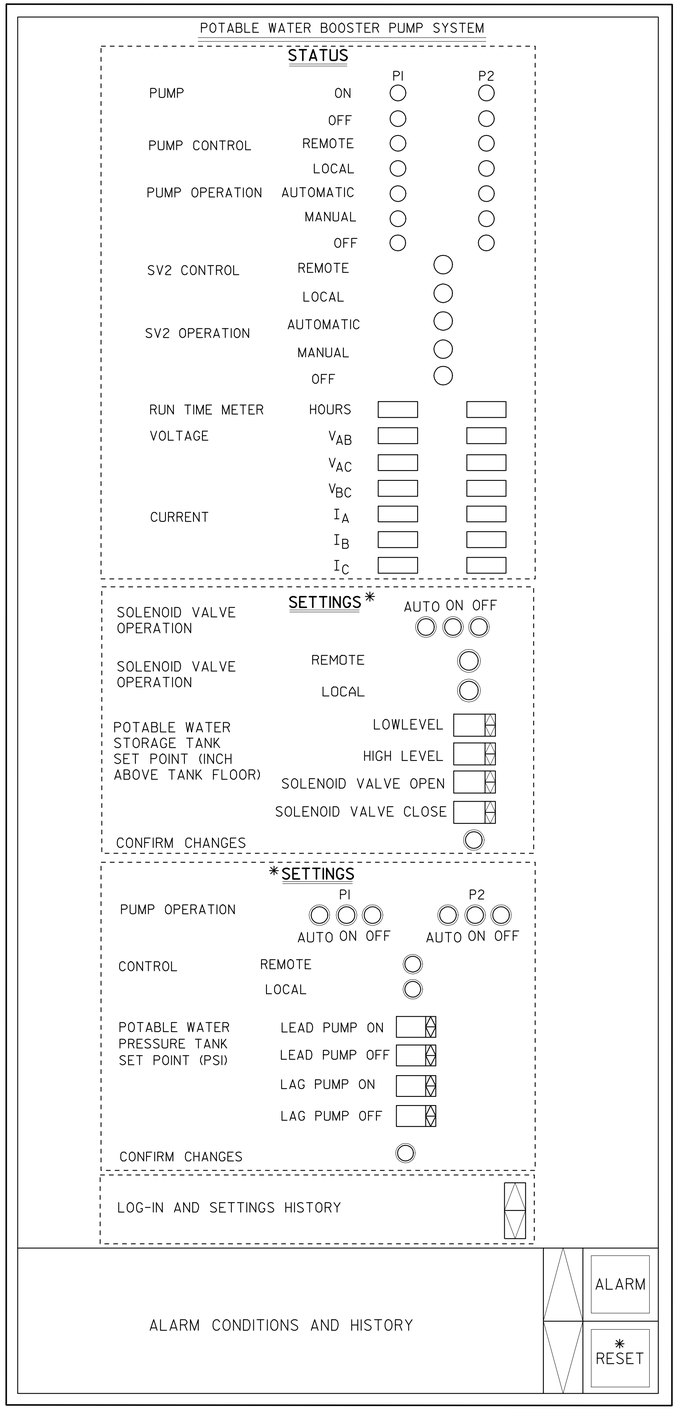

POTABLE WATER PUMPS SYSTEM

CALIFORNIA STATE FIRE MARSHAL APPROVED

Approval of this plan does not authorize or approve any omission or deviation from applicable regulations. Final approval is subject to field inspection. One set of approved plans shall be available on the project site at all times.

Reviewed by: FRANCIS SOLICH

Approval date: 09-11-13

DIST.	COUNTY	ROUTE	POST MILES TOTAL PROJECT	SHEET NO.	TOTAL SHEETS
03, 08	Sac, SBd	5, 15	23.3, R107.3	286	330

Jaswinder S Gill 08-15-13
REGISTERED ELECTRICAL ENGINEER DATE

REGISTERED PROFESSIONAL ENGINEER JASWINDER GILL No. 18551 Exp. 12-31-14 ELEC STATE OF CALIFORNIA

9-16-13
PLANS APPROVAL DATE

The State of California or its officers or agents shall not be responsible for the accuracy or completeness of electronic copies of this plan sheet.

Click on this screen to enter the RO System HMI (As provided by the manufacturer)

* PASSWORD REQUIRED FOR OPERATION

** FOR DETAILED REPORTS, SEE SHEET EE3-11

General Notes:

A. *Show water lines to be pulsating BLUE when water is flowing. Show waste stream to be pulsating GREEN when flowing.*

B. *Show disinfecting unit to be GREEN when watering pump is running and flashing RED when in alarmed state.*

C. *Show water level inside the tank as BLUE.*

D. *Show booster pumps to be GREEN when running and flashing RED when in alarmed state.*

E. *Alarm shall be pulsating RED when new alarm condition is present. The user acknowledging and/or clearing the alarm shall be kept and shown in the alarm history.*

F. *Log-in and settings history shall show logs of date, time, user name, and changes done on the settings. All persons or users who log-in and log-out remotely or locally to the SCADA system shall also be shown in the log-in and settings history.*

THIS DRAWING ACCURATE FOR ELECTRICAL WORK ONLY

	BY	CHECKED
DESIGN	Jaswinder Gill	J. S. Sandhu
DETAILS	Andy Quan	Jaswinder Gill
QUANTITIES	Jaswinder Gill	J. S. Sandhu

STATE OF CALIFORNIA
DEPARTMENT OF TRANSPORTATION

DIVISION OF ENGINEERING SERVICES
ELECTRICAL-MECHANICAL-WATER AND WASTEWATER DESIGN

BRIDGE NO. 540004R/L
POST MILE R107.3

C. V. KANE
SAFETY ROADSIDE REST AREA REHABILITATION
STRUCTURE 4 WATER TREATMENT
POTABLE WATER PRESSURE TANK AND BOOSTER PUMPS SCREEN

SHEET EE4-7.7

DOES SD Imperial Rev. 9/02

ORIGINAL SCALE IN INCHES FOR REDUCED PLANS 0 1 2 3

UNIT 3596
PROJECT NUMBER & PHASE 08000002291

DISREGARD PRINTS BEARING EARLIER REVISION DATES → 12/17/09 02/18/10 6/14/10 10/28/10 01/28/11 11/4/11 1/4/12 8/15/13

REVISION DATES (PRELIMINARY STAGE ONLY) SHEET OF

18-SEP-2013 12:42

ee4_7_07.dgn

DIST.	COUNTY	ROUTE	POST MILES TOTAL PROJECT	SHEET NO.	TOTAL SHEETS
03, 08	Sac, SBd	5, 15	23.3, R107.3	287	330

Jaswinder S Gill 08-15-13
REGISTERED ELECTRICAL ENGINEER DATE

REGISTERED PROFESSIONAL ENGINEER
JASWINDER GILL
No. 18551
Exp. 12-31-14
ELEC
STATE OF CALIFORNIA

9-16-13
PLANS APPROVAL DATE

The State of California or its officers or agents shall not be responsible for the accuracy or completeness of electronic copies of this plan sheet.

CALIFORNIA STATE FIRE MARSHAL APPROVED
Approval of this plan does not authorize or approve any omission or deviation from applicable regulations. Final approval is subject to field inspection. One set of approved plans shall be available on the project site at all times.
Reviewed by: FRANCIS SOLICH
Approval date: 09-11-13

WELL WATER

AVERAGE YEARLY FLOW		AVERAGE MONTHLY FLOW	
		Year 2010	
Year 2010	Gallons 0000	Month May	Gallons 0000
AVERAGE DAILY FLOW		**HOURLY FLOW**	
Month May	Year 2010	Date-Day 01/01/10-Mon	
Day/Date Mon/05	Gallons 0000	Time 3:00p.m.	Gallons 0000

PEAK FLOW QUERY

Year	Month	Date	Gallons
2010	00	00	00,000

RAW WATER MAIN

AVERAGE YEARLY FLOW		AVERAGE MONTHLY FLOW	
		Year 2010	
Year 2010	Gallons 0000	Month May	Gallons 0000
AVERAGE DAILY FLOW		**HOURLY FLOW**	
Month May	Year 2010	Date-Day 01/01/10-Mon	
Day/Date Mon/05	Gallons 0000	Time 3:00p.m.	Gallons 0000

PEAK FLOW QUERY

Year	Month	Date	Gallons
2010	00	00	00,000

POTABLE WATER MAIN

AVERAGE YEARLY FLOW		AVERAGE MONTHLY FLOW	
		Year 2010	
Year 2010	Gallons 0000	Month May	Gallons 0000
AVERAGE DAILY FLOW		**HOURLY FLOW**	
Month May	Year 2010	Date-Day 01/01/10-Mon	
Day/Date Mon/05	Gallons 0000	Time 3:00p.m.	Gallons 0000

PEAK FLOW QUERY

Year	Month	Date	Gallons
2010	00	00	00,000

N/B CS 1 (Raw)

AVERAGE YEARLY FLOW		AVERAGE MONTHLY FLOW	
		Year 2010	
Year 2010	Gallons 0000	Month May	Gallons 0000
AVERAGE DAILY FLOW		**HOURLY FLOW**	
Month May	Year 2010	Date-Day 01/01/10-Mon	
Day/Date Mon/05	Gallons 0000	Time 3:00p.m.	Gallons 0000

PEAK FLOW QUERY

Year	Month	Date	Gallons
2010	00	00	00,000

N/B CS 1 (Potable)

AVERAGE YEARLY FLOW		AVERAGE MONTHLY FLOW	
		Year 2010	
Year 2010	Gallons 0000	Month May	Gallons 0000
AVERAGE DAILY FLOW		**HOURLY FLOW**	
Month May	Year 2010	Date-Day 01/01/10-Mon	
Day/Date Mon/05	Gallons 0000	Time 3:00p.m.	Gallons 0000

PEAK FLOW QUERY

Year	Month	Date	Gallons
2010	00	00	00,000

N/B CS 2 (Raw)

AVERAGE YEARLY FLOW		AVERAGE MONTHLY FLOW	
		Year 2010	
Year 2010	Gallons 0000	Month May	Gallons 0000
AVERAGE DAILY FLOW		**HOURLY FLOW**	
Month May	Year 2010	Date-Day 01/01/10-Mon	
Day/Date Mon/05	Gallons 0000	Time 3:00p.m.	Gallons 0000

PEAK FLOW QUERY

Year	Month	Date	Gallons
2010	00	00	00,000

Page 1 2 3 Next>>

	BY	CHECKED
DESIGN	Jaswinder Gill	J. S. Sandhu
DETAILS	Andy Quan	Jaswinder Gill
QUANTITIES	Jaswinder Gill	J. S. Sandhu

STATE OF CALIFORNIA
DEPARTMENT OF TRANSPORTATION

DIVISION OF ENGINEERING SERVICES
ELECTRICAL-MECHANICAL-WATER AND WASTEWATER DESIGN

BRIDGE NO. 540004R/L
POST MILE R107.3

C. V. KANE
SAFETY ROADSIDE REST AREA REHABILITATION
STRUCTURE 4 WATER TREATMENT
HISTORICAL DATA SCREEN 1

SHEET EE4-7.8

DOES SD Imperial Rev. 9/02

ORIGINAL SCALE IN INCHES FOR REDUCED PLANS 0 1 2 3

UNIT 3596
PROJECT NUMBER & PHASE 08000002291

DISREGARD PRINTS BEARING EARLIER REVISION DATES →
REVISION DATES (PRELIMINARY STAGE ONLY) 10/25/10 01/25/11 11/4/11 1/3/12 8/15/13
SHEET OF

18-SEP-2013 12:43
ee4_7_08.dgn

DIST.	COUNTY	ROUTE	POST MILES TOTAL PROJECT	SHEET NO.	TOTAL SHEETS
03, 08	Sac, SBd	5, 15	23.3, R107.3	288	330

Jaswinder S Gill 08-15-13
REGISTERED ELECTRICAL ENGINEER DATE

REGISTERED PROFESSIONAL ENGINEER
JASWINDER GILL
No. 18551
Exp. 12-31-14
ELEC
STATE OF CALIFORNIA

9-16-13
PLANS APPROVAL DATE

The State of California or its officers or agents shall not be responsible for the accuracy or completeness of electronic copies of this plan sheet.

CALIFORNIA STATE FIRE MARSHAL APPROVED
Approval of this plan does not authorize or approve any omission or deviation from applicable regulations. Final approval is subject to field inspection. One set of approved plans shall be available on the project site at all times.
Reviewed by: FRANCIS SOLICH
Approval date: 09-11-13

N/B CS 2 (Potable)

AVERAGE YEARLY FLOW		AVERAGE MONTHLY FLOW	
Year	Gallons	Year 2010	
2010	0000	Month	Gallons
		May	0000
AVERAGE DAILY FLOW		**HOURLY FLOW**	
Month	Year	Date-Day	
May	2010	01/01/10-Mon	
Day/Date	Gallons	Time	Gallons
Mon/05	0000	3.00p.m.	0000

PEAK FLOW QUERY

Year	Month	Date	Gallons
2010	00	00	00,000

S/B CS 1 (Raw) (Future)

AVERAGE YEARLY FLOW		AVERAGE MONTHLY FLOW	
Year	Gallons	Year 2010	
2010	0000	Month	Gallons
		May	0000
AVERAGE DAILY FLOW		**HOURLY FLOW**	
Month	Year	Date-Day	
May	2010	01/01/10-Mon	
Day/Date	Gallons	Time	Gallons
Mon/05	0000	3.00p.m.	0000

PEAK FLOW QUERY

Year	Month	Date	Gallons
2010	00	00	00,000

S/B CS 1 (Potable) (Future)

AVERAGE YEARLY FLOW		AVERAGE MONTHLY FLOW	
Year	Gallons	Year 2010	
2010	0000	Month	Gallons
		May	0000
AVERAGE DAILY FLOW		**HOURLY FLOW**	
Month	Year	Date-Day	
May	2010	01/01/10-Mon	
Day/Date	Gallons	Time	Gallons
Mon/05	0000	3.00p.m.	0000

PEAK FLOW QUERY

Year	Month	Date	Gallons
2010	00	00	00,000

S/B CS 2 (Raw) (Future)

AVERAGE YEARLY FLOW		AVERAGE MONTHLY FLOW	
Year	Gallons	Year 2010	
2010	0000	Month	Gallons
		May	0000
AVERAGE DAILY FLOW		**HOURLY FLOW**	
Month	Year	Date-Day	
May	2010	01/01/10-Mon	
Day/Date	Gallons	Time	Gallons
Mon/05	0000	3.00p.m.	0000

PEAK FLOW QUERY

Year	Month	Date	Gallons
2010	00	00	00,000

S/B CS 2 (Potable) (Future)

AVERAGE YEARLY FLOW		AVERAGE MONTHLY FLOW	
Year	Gallons	Year 2010	
2010	0000	Month	Gallons
		May	0000
AVERAGE DAILY FLOW		**HOURLY FLOW**	
Month	Year	Date-Day	
May	2010	01/01/10-Mon	
Day/Date	Gallons	Time	Gallons
Mon/05	0000	3.00p.m.	0000

PEAK FLOW QUERY

Year	Month	Date	Gallons
2010	00	00	00,000

<<Previous Page 1 2 3 Next>>

	BY	CHECKED
DESIGN	Jaswinder Gill	J. S. Sandhu
DETAILS	Andy Quan	Jaswinder Gill
QUANTITIES	Jaswinder Gill	J. S. Sandhu

STATE OF CALIFORNIA
DEPARTMENT OF TRANSPORTATION

DIVISION OF ENGINEERING SERVICES
ELECTRICAL-MECHANICAL-WATER AND WASTEWATER DESIGN

BRIDGE NO. 540004R/L
POST MILE R107.3

C. V. KANE
SAFETY ROADSIDE REST AREA REHABILITATION
STRUCTURE 4 WATER TREATMENT
HISTORICAL DATA SCREEN 2

SHEET EE4-7.9

DOES SD Imperial Rev. 9/02

ORIGINAL SCALE IN INCHES FOR REDUCED PLANS 0 1 2 3

UNIT 3596
PROJECT NUMBER & PHASE 08000002291

DISREGARD PRINTS BEARING EARLIER REVISION DATES →
REVISION DATES (PRELIMINARY STAGE ONLY) 10/25/10 01/25/11 11/4/11 1/3/12 8/15/13
SHEET OF

18-SEP-2013 12:43
ee4_7_09.dgn

DIST.	COUNTY	ROUTE	POST MILES TOTAL PROJECT	SHEET NO.	TOTAL SHEETS
03, 08	Sac, SBd	5, 15	23.3, R107.3	289	330

CALIFORNIA STATE FIRE MARSHAL
APPROVED
Approval of this plan does not authorize or approve any omission or deviation from applicable regulations. Final approval is subject to field inspection. One set of approved plans shall be available on the project site at all times.
Reviewed by: FRANCIS SOLICH
Approval date: 09-11-13

Jaswinder S Gill 08-15-13
REGISTERED ELECTRICAL ENGINEER DATE

REGISTERED PROFESSIONAL ENGINEER
JASWINDER GILL
No. 18551
Exp. 12-31-14
ELEC
STATE OF CALIFORNIA

9-16-13
PLANS APPROVAL DATE

The State of California or its officers or agents shall not be responsible for the accuracy or completeness of electronic copies of this plan sheet.

N/B PEOPLE COUNTERS

CS 1 (Men)	CS 2 (Men)
Month: May, Year: 2010, Day/Date: Mon/05 0000	Month: May, Year: 2010, Day/Date: Mon/05 0000
CS 1 (Women)	**CS 2 (Women)**
Month: May, Year: 2010, Day/Date: Mon/05 0000	Month: May, Year: 2010, Day/Date: Mon/05 0000
CS 1 (Family)	**CS 2 (Family)**
Month: May, Year: 2010, Day/Date: Mon/05 0000	Month: May, Year: 2010, Day/Date: Mon/05 0000

S/B PEOPLE COUNTERS (Future)

CS 1 (Men)	CS 2 (Men)
Month: May, Year: 2010, Day/Date: Mon/05 0000	Month: May, Year: 2010, Day/Date: Mon/05 0000
CS 1 (Women)	**CS 2 (Women)**
Month: May, Year: 2010, Day/Date: Mon/05 0000	Month: May, Year: 2010, Day/Date: Mon/05 0000
CS 1 (Family)	**CS 2 (Family)**
Month: May, Year: 2010, Day/Date: Mon/05 0000	Month: May, Year: 2010, Day/Date: Mon/05 0000

VEHICLE COUNTERS

N/B CAR COUNTER	S/B CAR COUNTER (Future)
Month: May, Year: 2010, Day/Date: Mon/05 0000	Month: May, Year: 2010, Day/Date: Mon/05 0000
N/B TRUCK COUNTER	**S/B TRUCK COUNTER (Future)**
Month: May, Year: 2010, Day/Date: Mon/05 0000	Month: May, Year: 2010, Day/Date: Mon/05 0000

<<Previous Page 1 2 3 Next>>

	BY	CHECKED
DESIGN	Jaswinder Gill	J. S. Sandhu
DETAILS	Andy Quan	Jaswinder Gill
QUANTITIES	Jaswinder Gill	J. S. Sandhu

STATE OF CALIFORNIA
DEPARTMENT OF TRANSPORTATION

DIVISION OF ENGINEERING SERVICES
ELECTRICAL-MECHANICAL-WATER AND WASTEWATER DESIGN

BRIDGE NO. 540004R/L
POST MILE R107.3

C. V. KANE
SAFETY ROADSIDE REST AREA REHABILITATION
STRUCTURE 4 WATER TREATMENT
HISTORICAL DATA SCREEN 3

SHEET EE4-7.10

DOES SD Imperial Rev. 9/02

ORIGINAL SCALE IN INCHES FOR REDUCED PLANS 0 1 2 3

UNIT 3596
PROJECT NUMBER & PHASE 08000002291

DISREGARD PRINTS BEARING EARLIER REVISION DATES →
REVISION DATES (PRELIMINARY STAGE ONLY) 10/25/10 01/25/11 11/4/11 1/3/12 8/15/13
SHEET OF

18-SEP-2013 12:43
ee4_7_10.dgn

DIST.	COUNTY	ROUTE	POST MILES TOTAL PROJECT	SHEET NO.	TOTAL SHEETS
03, 08	Sac, SBd	5, 15	23.3, R107.3	290	330

CALIFORNIA STATE FIRE MARSHAL APPROVED
Approval of this plan does not authorize or approve any omission or deviation from applicable regulations. Final approval is subject to field inspection. One set of approved plans shall be available on the project site at all times.
Reviewed by: FRANCIS SOLICH
Approval date: 09-11-13

Jaswinder S Gill 08-15-13
REGISTERED ELECTRICAL ENGINEER DATE

REGISTERED PROFESSIONAL ENGINEER JASWINDER GILL No. 18551 Exp. 12-31-14 ELEC STATE OF CALIFORNIA

9-16-13
PLANS APPROVAL DATE

The State of California or its officers or agents shall not be responsible for the accuracy or completeness of electronic copies of this plan sheet.

General Notes:

A. By clicking any screen button should enable the observer to go to that screen.

B. For other applicable Notes, see sheets EE4-7.12 through EE4-7.13.

C. Sludge inside sewage pond 1 to be shown Brown in color.

D. Water level inside sewage pond 1 to be shown Yellow in color.

Sewage System Main Menu:

- Sewage Lift Station and Flow Meter Screen — Link
- Sewage Pond Transducers and Aerator Screen — Link

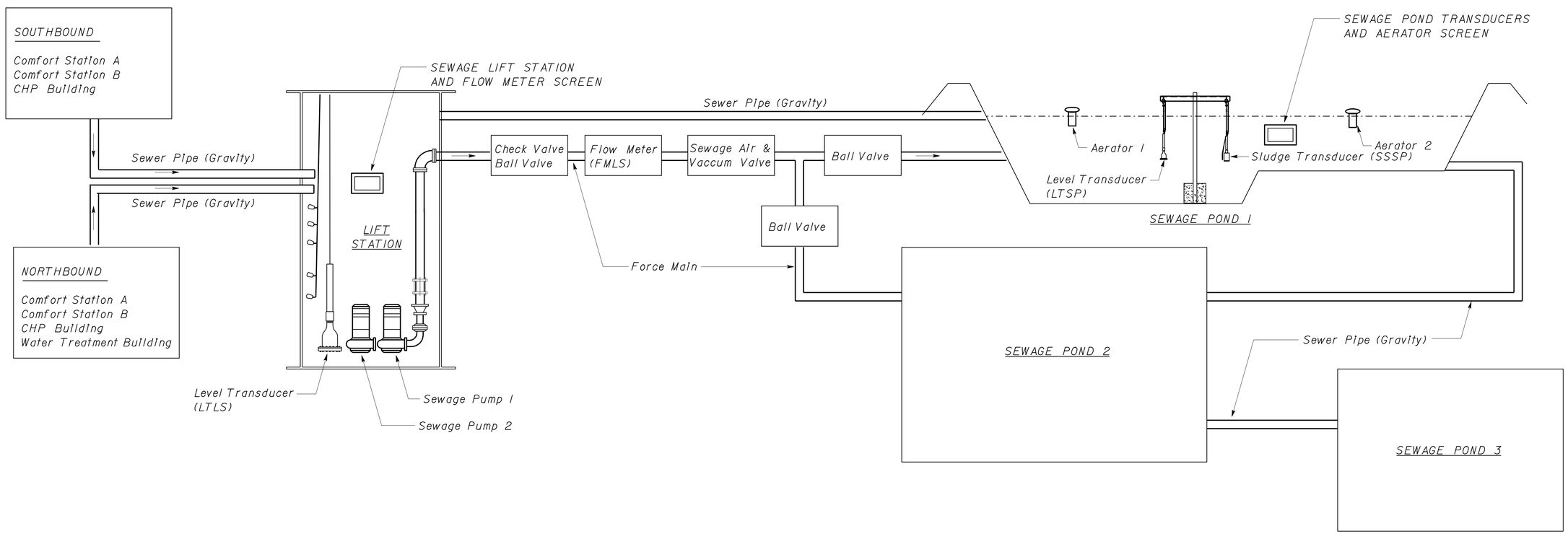

	BY	CHECKED
DESIGN	Jaswinder Gill	J. S. Sandhu
DETAILS	M Akkipeddi	Jaswinder Gill
QUANTITIES	Jaswinder Gill	J. S. Sandhu

STATE OF CALIFORNIA DEPARTMENT OF TRANSPORTATION

DIVISION OF ENGINEERING SERVICES
ELECTRICAL-MECHANICAL-WATER AND WASTEWATER DESIGN

BRIDGE NO. 540004R/L
POST MILE R107.3

C. V. KANE SAFETY ROADSIDE REST AREA REHABILITATION

SEWAGE SYSTEM OVERVIEW SCREEN

SHEET **EE4-7.11**

DOES SD Imperial Rev. 9/02

ORIGINAL SCALE IN INCHES FOR REDUCED PLANS 0 1 2 3

UNIT 3596
PROJECT NUMBER & PHASE 08000002291

DISREGARD PRINTS BEARING EARLIER REVISION DATES → REVISION DATES (PRELIMINARY STAGE ONLY) 09-13-10 10-25-10 01/25/11 11/4/11 11/27/12 8/15/13

SHEET OF

18-SEP-2013 12:43

ee4_7_11.dgn

DIST.	COUNTY	ROUTE	POST MILES TOTAL PROJECT	SHEET NO.	TOTAL SHEETS
03, 08	Sac, SBd	5, 15	23.3, R107.3	291	330

CALIFORNIA STATE FIRE MARSHAL APPROVED
Approval of this plan does not authorize or approve any omission or deviation from applicable regulations. Final approval is subject to field inspection. One set of approved plans shall be available on the project site at all times.
Reviewed by: FRANCIS SOLICH
Approval date: 09-11-13

Jaswinder S Gill 08-15-13
REGISTERED ELECTRICAL ENGINEER DATE

REGISTERED PROFESSIONAL ENGINEER JASWINDER GILL No. 18551 Exp. 12-31-14 ELEC STATE OF CALIFORNIA

9-16-13
PLANS APPROVAL DATE

The State of California or its officers or agents shall not be responsible for the accuracy or completeness of electronic copies of this plan sheet.

General Notes:

A. *Show pump In GREEN color when running and. flashing RED color when In alarmed state.*

B. *Show float switch In GREEN color when activated and RED color when malfunctioning.*

C. *Show all sewer pipes In YELLOW color when water Is flowing,*

D. *Show water level Inside the Lift Station In YELLOW color.*

E. *For details of scroll down and drop down menu of flow meter, see sheet EE4-7.13.*

F. *Alarm shall be pulsating RED when new alarm condition Is present. The user acknowledging and/or clearing the alarm shall be kept and shown on the alarm history.*

G. *Log-In and settings history shall show logs of date, time, user name, and changes done on the settings. All persons or users who log-In and log-out remotely or locally to C V Kane's SCADA system shall also be shown In the log-In and settings history.*

LEGEND

- STATUS INDICATION
- PUSHBUTTON
- TEXT DISPLAY
- TEXT DISPLAY WITH SCROLL UP/DOWN FUNCTION
- TEXT DISPLAY WITH DROP DOWN INFORMATION
- ✳ PASSWORD REQUIRED FOR OPERATION
- ✳✳ FOR DETAILED REPORTS, SEE SHEET EE4-7.14

SEWAGE LIFT STATION TO✳✳ SEWAGE POND FLOW METER

AVERAGE YEARLY FLOW
Year 2010 Gallons 00000

AVERAGE DAILY FLOW
Month May Year 2010
Day/Date Mon/05 Gallons 00000

AVERAGE MONTHLY FLOW
Year 2010
Month May Gallons 00000

HOURLY FLOW
Date-Day 01/01/10-Mon
Time 3.00p.m. Gallons 00000

PEAK FLOW QUERY

Year	Month	Date	Gallons
2010	01	01	00000

SEWAGE LIFT STATION

STATUS

		P1	P2
PUMP	ON		
	OFF		
CONTROL	REMOTE		
	LOCAL		
OPERATION	AUTOMATIC		
	MANUAL		
	OFF		
RUN TIME METER	HOURS		
VOLTAGE	V_{AB}		
	V_{AC}		
	V_{BC}		
CURRENT	I_A		
	I_B		
	I_C		

SETTINGS✳

		P1	P2
PUMP OPERATION		AUTO ON OFF	AUTO ON OFF
CONTROL	REMOTE		
	LOCAL		
LIFT STATION SET POINT (INCH ABOVE LIFT STATION FLOOR)	HIGH LEVEL		
	LAG PUMP ON		
	LEAD PUMP ON		
	LEAD AND LAG PUMP OFF		
	LOW LEVEL		
RUN TIME/CYCLE ADJUSTMENT		LEAD	LAG
NO. OF CYCLES/HOUR ADJUSTMENT			
CONFIRM CHANGES			

LOG-IN AND SETTINGS HISTORY

SEWAGE LEVEL FT

ALARM CONDITIONS AND HISTORY — ALARM ✳RESET

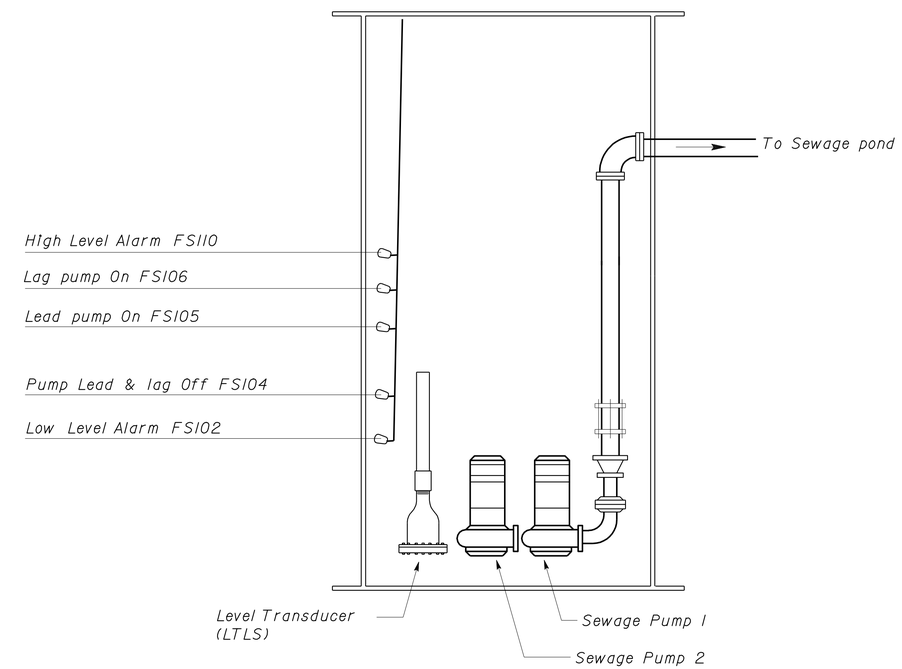

SEWAGE LIFT STATION AND FLOW METER SCREEN

THIS DRAWING ACCURATE FOR ELECTRICAL WORK ONLY

	BY	CHECKED
DESIGN	Jaswinder Gill	J. S. Sandhu
DETAILS	M Akklpeddl	Jaswinder Gill
QUANTITIES	Jaswinder Gill	J. S. Sandhu

STATE OF CALIFORNIA DEPARTMENT OF TRANSPORTATION

DIVISION OF ENGINEERING SERVICES ELECTRICAL-MECHANICAL-WATER AND WASTEWATER DESIGN

BRIDGE NO. 540004R/L
POST MILE R107.3

C. V. KANE SAFETY ROADSIDE REST AREA REHABILITATION
SEWAGE LIFT STATION AND FLOW METER SCREEN

SHEET EE4-7.12

DOES SD Imperial Rev. 9/02

ORIGINAL SCALE IN INCHES FOR REDUCED PLANS 0 1 2 3

UNIT 3596
PROJECT NUMBER & PHASE 08000002291

DISREGARD PRINTS BEARING EARLIER REVISION DATES → REVISION DATES (PRELIMINARY STAGE ONLY) 10/14/10 01/28/11 11/4/11 1/27/12 8/15/13 SHEET OF

18-SEP-2013 12:43
ee4_7_12.dgn

DIST.	COUNTY	ROUTE	POST MILES TOTAL PROJECT	SHEET NO.	TOTAL SHEETS
03, 08	Sac, SBd	5, 15	23.3, R107.3	292	330

CALIFORNIA STATE FIRE MARSHAL
APPROVED
Approval of this plan does not authorize or approve any omission or deviation from applicable regulations. Final approval is subject to field inspection. One set of approved plans shall be available on the project site at all times.
Reviewed by: FRANCIS SOLICH
Approval date: 09-11-13

Jaswinder S Gill 08-15-13
REGISTERED ELECTRICAL ENGINEER DATE

REGISTERED PROFESSIONAL ENGINEER
JASWINDER GILL
No. 18551
Exp. 12-31-14
ELEC
STATE OF CALIFORNIA

9-16-13
PLANS APPROVAL DATE

The State of California or its officers or agents shall not be responsible for the accuracy or completeness of electronic copies of this plan sheet.

AERATOR SYSTEM

STATUS

		AERATOR 1	AERATOR 2
PUMP	ON	○	○
	OFF	○	○
OPERATION	MANUAL	○	○
	OFF	○	○
	AUTOMATIC	○	○
CONTROLS	REMOTE	○	○
	LOCAL	○	○
RUN TIME METER		▭	▭

SETTINGS*

MANUAL OPERATION ◎◎ ON/OFF

CONTROL REMOTE ◎ LOCAL ◎

AERATOR TIMER SET POINT	HR	MIN	AM/PM
AERATOR ON TIME	▭	▭	▭
AERATOR OFF TIME	▭	▭	▭

SET POINT CHANGE CONFIRM ◎

LOG-IN AND SETTINGS HISTORY ▭

SEWAGE POND TRANSDUCER

LEVEL TRANSDUCER (POND DEPTH = 8 FT) ▭ FT

SLUDGE TRANSDUCER ▭ FT

General Notes:

A. Log-in and settings history shall show logs of date, time, user name, and changes done on the settings. All persons or users who log-in and log-out remotely or locally to C V Kane's SCADA system shall also be shown in the log-in and settings history.

LEGEND

○ STATUS INDICATION

◎ PUSHBUTTON

▭ TEXT DISPLAY

▭ TEXT DISPLAY WITH SCROLL UP/DOWN FUNCTION

* PASSWORD REQUIRED FOR OPERATION

SEWAGE POND TRANSDUCERS AND AERATOR SCREEN

	BY	CHECKED
DESIGN	Jaswinder Gill	J. S. Sandhu
DETAILS	M Akklpeddl	Jaswinder Gill
QUANTITIES	Jaswinder Gill	J. S. Sandhu

STATE OF CALIFORNIA
DEPARTMENT OF TRANSPORTATION

DIVISION OF ENGINEERING SERVICES
ELECTRICAL-MECHANICAL-WATER AND WASTEWATER DESIGN

BRIDGE NO. 540004R/L
POST MILE R107.3

C. V. KANE
SAFETY ROADSIDE REST AREA REHABILITATION
SEWAGE POND TRANSDUCER AND AERATOR SYSTEM SCREEN

SHEET EE4-7.13

DOES SD Imperial Rev. 9/02

ORIGINAL SCALE IN INCHES FOR REDUCED PLANS 0 1 2 3

UNIT 3596
PROJECT NUMBER & PHASE 08000002291

DISREGARD PRINTS BEARING EARLIER REVISION DATES → 10/14/10 10/25/10 01/25/11 11/4/11 1/27/12 8/15/13

REVISION DATES (PRELIMINARY STAGE ONLY) SHEET OF

18-SEP-2013 12:43

ee4_7_13.dgn

DIST.	COUNTY	ROUTE	POST MILES TOTAL PROJECT	SHEET NO.	TOTAL SHEETS
03, 08	Sac, SBd	5, 15	23.3, R107.3	293	330

REGISTERED ELECTRICAL ENGINEER — 08-15-13 DATE

REGISTERED PROFESSIONAL ENGINEER — JASWINDER GILL — No. 18551 — Exp. 12-31-14 — ELEC — STATE OF CALIFORNIA

9-16-13
PLANS APPROVAL DATE

The State of California or its officers or agents shall not be responsible for the accuracy or completeness of electronic copies of this plan sheet.

CALIFORNIA STATE FIRE MARSHAL APPROVED

Approval of this plan does not authorize or approve any omission or deviation from applicable regulations. Final approval is subject to field inspection. One set of approved plans shall be available on the project site at all times.

Reviewed by: FRANCIS SOLICH

Approval date: 09-11-13

AVERAGE YEARLY FLOW

Year	Gallons
2010	00000
2010	00000
2011	00000
2012	00000
2013	00000
2014	00000
2015	00000
2016	00000
2017	00000
2018	00000
2019	00000
2019	00000

AVERAGE MONTHLY FLOW

Year: 2010

Month	Gallons
May	00000
JAN	00000
FEB	00000
MAR	00000
APR	00000
MAY	00000
JUN	00000
JUL	00000
AUG	00000
SEP	00000
OCT	00000
NOV	00000
DEC	00000

AVERAGE DAILY FLOW

Month: May

Day/Date: Mon/05 Gallons: 00000

MON	TUE	WED	THU	FRI	SAT	SUN
			1 00000	2 00000	3 00000	4 00000
5 00000	6 00000	7 00000	8 00000	9 00000	10 00000	11 00000
12 00000	13 00000	14 00000	15 00000	16 00000	17 00000	18 00000
19 00000	20 00000	21 00000	22 00000	23 00000	24 00000	25 00000
26 00000	27 00000	28 00000	29 00000	30 00000	31 00000	

HOURLY FLOW

Date-Day: 01/01/10-Mon

Time	Gallons
12.00 AM	00000
12.00 AM	00000
01.00 AM	00000
02.00 AM	00000
03.00 AM	00000
04.00 AM	00000
05.00 AM	00000
06.00 AM	00000
07.00 AM	00000
08.00 AM	00000
09.00 AM	00000
10.00 AM	00000
11.00 AM	00000
12.00 PM	00000
01.00 PM	00000
02.00 PM	00000
03.00 PM	00000
04.00 PM	00000
05.00 PM	00000
06.00 PM	00000
07.00 PM	00000
08.00 PM	00000
09.00 PM	00000
10.00 PM	00000
11.00 PM	00000

LEGEND

- Scroll down menu
- Drop down menu
- Input menu
- Output menu

PEAK FLOW QUERY

Year	Month	Date	Day	Gallons
2010	01	1	Mon	00000

If only year is specified, query will show peak flow of the specific year.

If Year and month is specified, query will give peak flow of the specific month in that year.

If Year, month and date is specified, query will give peak flow of the specific date in that month and year.

	BY	CHECKED
DESIGN	Jaswinder Gill	J. S. Sandhu
DETAILS	M Akkipeddi	Jaswinder Gill
QUANTITIES	Jaswinder Gill	J. S. Sandhu

STATE OF CALIFORNIA
DEPARTMENT OF TRANSPORTATION

DIVISION OF ENGINEERING SERVICES
ELECTRICAL-MECHANICAL-WATER AND WASTEWATER DESIGN

BRIDGE NO. 540004R/L
POST MILE R107.3

C. V. KANE
SAFETY ROADSIDE REST AREA REHABILITATION
SCROLL/DROP DOWN MENU FORMAT

SHEET EE4-7.14

DOES SD Imperial Rev. 9/02

ORIGINAL SCALE IN INCHES FOR REDUCED PLANS 0 1 2 3

UNIT 3596
PROJECT NUMBER & PHASE 08000002291

DISREGARD PRINTS BEARING EARLIER REVISION DATES → 10/14/10 10/28/10 01/28/11 11/4/11 1/27/12 8/15/13

REVISION DATES (PRELIMINARY STAGE ONLY) SHEET OF

18-SEP-2013 12:43

ee4_7_14.dgn

DIST.	COUNTY	ROUTE	POST MILES TOTAL PROJECT	SHEET NO.	TOTAL SHEETS
03, 08	Sac, SBd	5, 15	23.3, R107.3	294	330

CALIFORNIA STATE FIRE MARSHAL APPROVED

Approval of this plan does not authorize or approve any omission or deviation from applicable regulations. Final approval is subject to field inspection. One set of approved plans shall be available on the project site at all times.

Reviewed by: FRANCIS SOLICH

Approval date: 09-11-13

Jaswinder S Gill 08-15-13

REGISTERED ELECTRICAL ENGINEER — DATE

REGISTERED PROFESSIONAL ENGINEER — JASWINDER GILL — No. 18551 — Exp. 12-31-14 — ELEC — STATE OF CALIFORNIA

9-16-13

PLANS APPROVAL DATE

The State of California or its officers or agents shall not be responsible for the accuracy or completeness of electronic copies of this plan sheet.

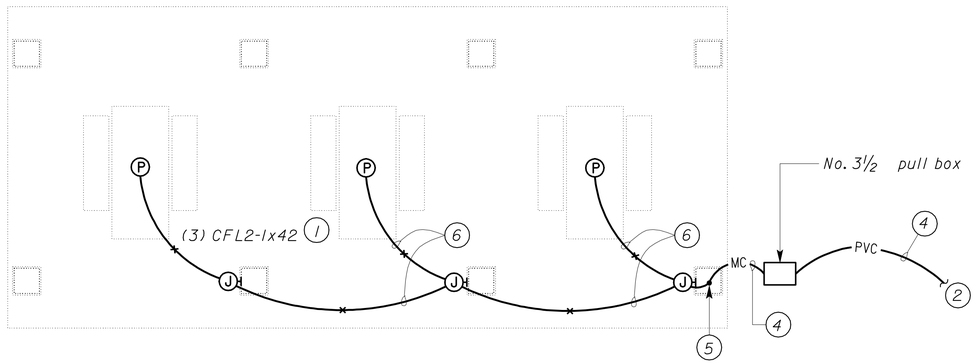

PICNIC SHELTER (3 TABLES)

SCALE 1/4" = 1'-0"

Notes:

1. *Pendant mount fixtures in-between the structural beams. See Structural Plans for location of beams. Bottom of the fixture shall not be below 8'.*
2. *To ELCS-NI inside IFSIA at Comfort Station A.*
3. *Not used.*
4. *1"C, 2#8, 1#10G. Conductor numbers are L61 and N6.*
5. *1"C, conduit embedded inside the Structural column, with 2#12, 1#12G. See Structural sheet ST-5 for details.*
6. *¾"C, 2#12, 1#12G.*

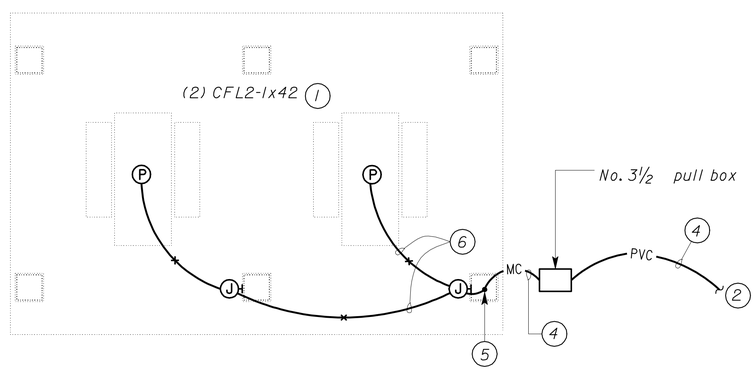

PICNIC SHELTER (2 TABLES)

SCALE 1/4" = 1'-0"

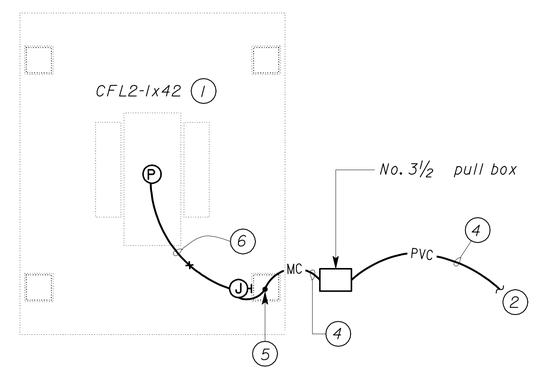

PICNIC SHELTER (1 TABLE)

SCALE 1/4" = 1'-0"

General Notes:

A. *For exact location of lighting fixtures, see Architectural Plans.*

B. *For light fixture schedule, see sheet EE8-1.6.*

C. *For ELCS-NI schematics, see sheet EE8-1.5.*

PLAN

SCALE 1/4" = 1'-0"

THIS DRAWING ACCURATE FOR ELECTRICAL WORK ONLY

	BY	CHECKED
DESIGN	Jaswinder Gill	J. S. Sandhu
DETAILS	Ed D.Tapalla 9/09	Jaswinder Gill
QUANTITIES	Jaswinder Gill	J. S. Sandhu

STATE OF CALIFORNIA DEPARTMENT OF TRANSPORTATION

DIVISION OF ENGINEERING SERVICES ELECTRICAL-MECHANICAL-WATER AND WASTEWATER DESIGN

BRIDGE NO. 540004R/L

POST MILE R107.3

C. V. KANE SAFETY ROADSIDE REST AREA REHABILITATION

STRUCTURE 6 PICNIC SHELTER

ELECTRICAL PLAN

SHEET EE6-1.1

DOES SD Imperial Rev. 9/02

ORIGINAL SCALE IN INCHES FOR REDUCED PLANS 0 1 2 3

UNIT 3596

PROJECT NUMBER & PHASE 08000002291

DISREGARD PRINTS BEARING EARLIER REVISION DATES

REVISION DATES (PRELIMINARY STAGE ONLY) 12/17/09 02/18/10 04/05/10 6/14/10 10/25/10 01/25/11 11/4/11 1/3/12 8/15/13

SHEET OF

18-SEP-2013 12:43

ee6_1_01.dgn

DIST.	COUNTY	ROUTE	POST MILES TOTAL PROJECT	SHEET NO.	TOTAL SHEETS
03, 08	Sac, SBd	5, 15	23.3, R107.3	295	330

REGISTERED ELECTRICAL ENGINEER — 08-15-13 DATE

REGISTERED PROFESSIONAL ENGINEER — JASWINDER GILL — No. 18551 — Exp. 12-31-14 — ELEC — STATE OF CALIFORNIA

9-16-13
PLANS APPROVAL DATE

The State of California or its officers or agents shall not be responsible for the accuracy or completeness of electronic copies of this plan sheet.

CALIFORNIA STATE FIRE MARSHAL APPROVED

Approval of this plan does not authorize or approve any omission or deviation from applicable regulations. Final approval is subject to field inspection. One set of approved plans shall be available on the project site at all times.

Reviewed by: FRANCIS SOLICH

Approval date: 09-11-13

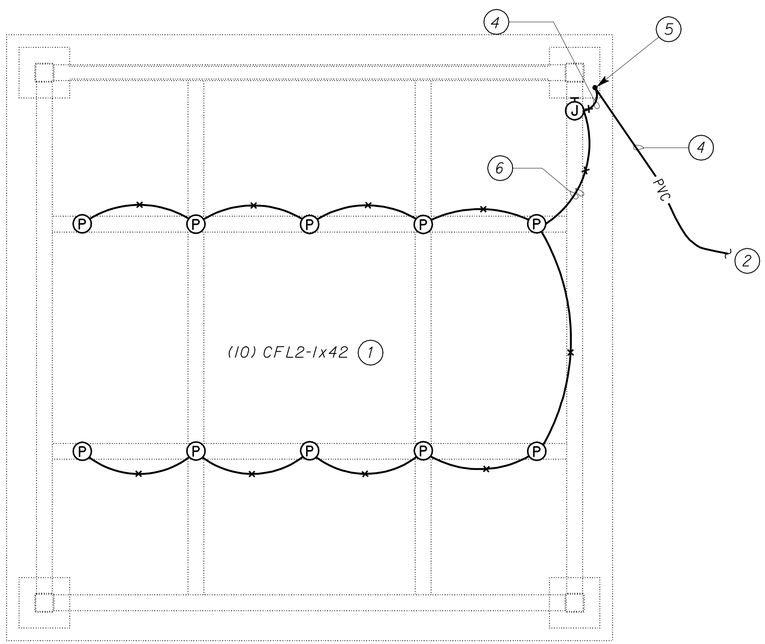

PLAN

SCALE 1/4" = 1'-0"

General Notes:

A. *For exact location of lighting fixtures, see Architectural Plans.*

B. *For light fixture schedule, see sheet EE8-1.6.*

C. *For ELCS-N1 schematics, see sheet EE8-1.5.*

Notes:

1. *Pendant mount or support fixtures on 6 inch structural beams. See Structural Plans for location of beams. Bottom of the fixture shall not be below "8-0".*
2. *To ELCS-N1 inside IFSIA at Comfort Station A on the Northbound SRRA. For continuation, see sheet EE0-03.*
3. *Not used.*
4. *1"C PVC, 2*8, 1*10G (Conductor numbers are L61 and N6) and 2*10, 1*10G (Conductor numbers are L110 and N10).*
5. *1" MC, condult embedded inside the Structural column, with 2*8, 1*10G (Conductor numbers are L61 and N6) and 2*10, 1*10G (Conductor numbers are L110 and N10).*
6. *3/4"C, 2*12, 1*12G (Conductor numbers are L61 and N6).*

THIS DRAWING ACCURATE FOR ELECTRICAL WORK ONLY

	BY	CHECKED
DESIGN	Jaswinder Gill	J. S. Sandhu
DETAILS	Ed D.Tapalla 9/09	Jaswinder Gill
QUANTITIES	Jaswinder Gill	J. S. Sandhu

STATE OF CALIFORNIA
DEPARTMENT OF TRANSPORTATION

DIVISION OF ENGINEERING SERVICES
ELECTRICAL-MECHANICAL-WATER AND WASTEWATER DESIGN

BRIDGE NO. 540004R/L
POST MILE R107.3

C. V. KANE
SAFETY ROADSIDE REST AREA REHABILITATION
STRUCTURE 7 INTERPRETIVE CNTR
ELECTRICAL PLAN

SHEET EE7-1.1

DOES SD Imperial Rev. 9/02

ORIGINAL SCALE IN INCHES FOR REDUCED PLANS 0 1 2 3

UNIT 3596
PROJECT NUMBER & PHASE 08000002291

DISREGARD PRINTS BEARING EARLIER REVISION DATES →

REVISION DATES (PRELIMINARY STAGE ONLY) 12/11/09 02/18/10 04/05/10 6/04/10 10/25/10 01/26/11 11/4/11 1/26/12 8/15/13

SHEET OF

18-SEP-2013 12:43

ee7_1_01.dgn

DIST.	COUNTY	ROUTE	POST MILES TOTAL PROJECT	SHEET NO.	TOTAL SHEETS
03, 08	Sac, SBd	5, 15	23.3, R107.3	296	330

REGISTERED ELECTRICAL ENGINEER — 08-15-13 DATE

REGISTERED PROFESSIONAL ENGINEER — JASWINDER GILL — No. 18551 — Exp. 12-31-14 — ELEC — STATE OF CALIFORNIA

9-16-13
PLANS APPROVAL DATE

The State of California or its officers or agents shall not be responsible for the accuracy or completeness of electronic copies of this plan sheet.

CALIFORNIA STATE FIRE MARSHAL APPROVED

Approval of this plan does not authorize or approve any omission or deviation from applicable regulations. Final approval is subject to field inspection. One set of approved plans shall be available on the project site at all times.

Reviewed by: FRANCIS SOLICH
Approval date: 09-11-13

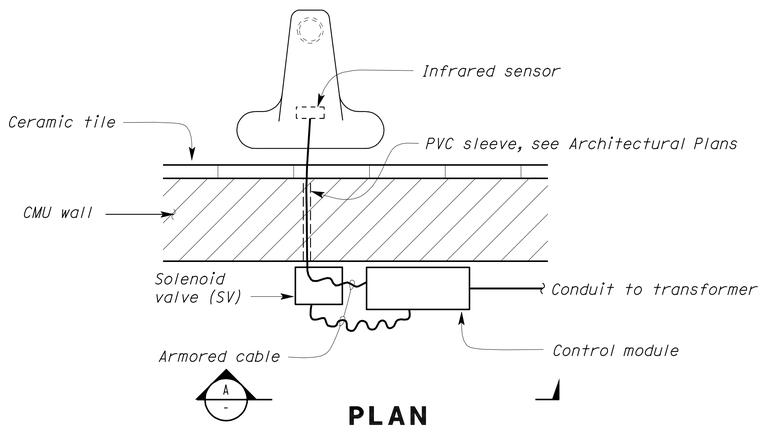

PLAN

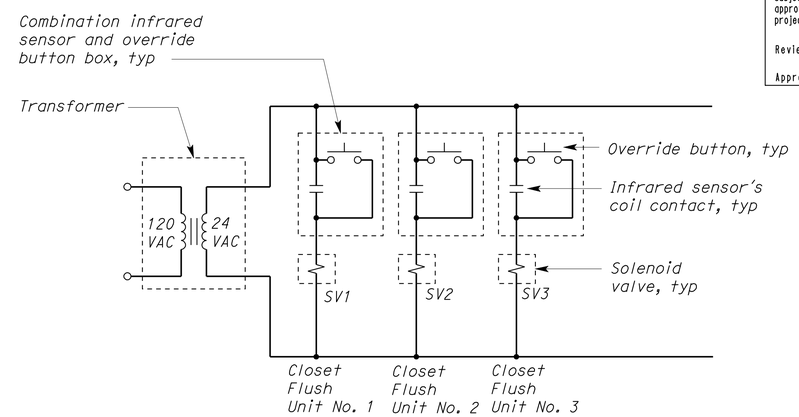

WATER CLOSET SENSOR SCHEMATIC

General Notes:

A. The schematic diagrams and detail that are shown on this sheet are based on one manufacturer for reference only. Exact wiring and installation depends on the units furnished. Contractor shall furnish and install any additional components, conduits, conductors and cables necessary for the automatic operation without additional cost to the State.

B. For quantity of faucets and water closets per transformer, see "Automatic Flush System" plans.

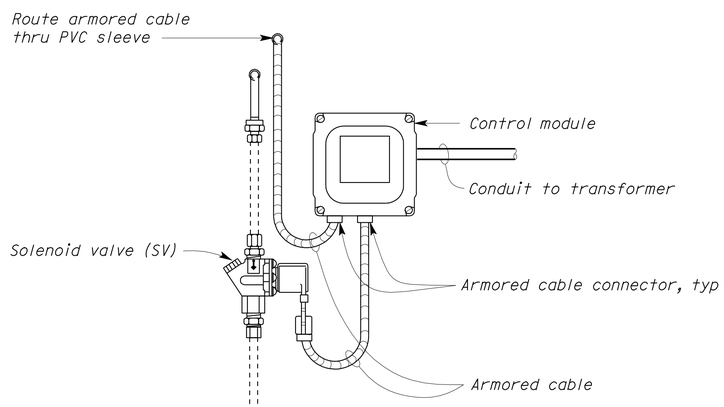

(A) ELEVATION

TYPICAL SENSOR OPERATED FAUCET

NO SCALE

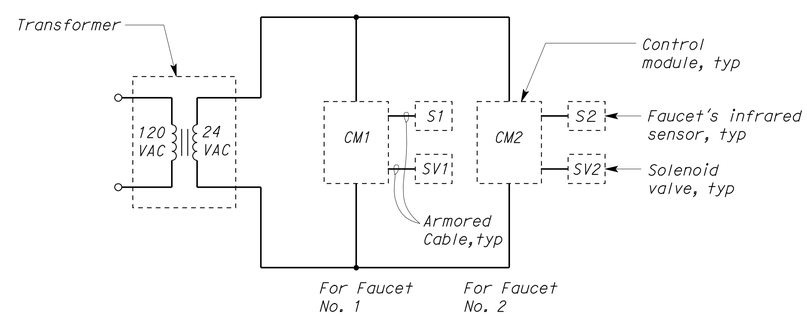

TYPICAL SENSOR OPERATED FAUCET SCHEMATIC

THIS DRAWING ACCURATE FOR ELECTRICAL WORK ONLY

	BY	CHECKED
DESIGN	Jaswinder Gill	J. S. Sandhu
DETAILS	Ed D.Tapalla 9/09	Jaswinder Gill
QUANTITIES	Jaswinder Gill	J. S. Sandhu

STATE OF CALIFORNIA
DEPARTMENT OF TRANSPORTATION

DIVISION OF ENGINEERING SERVICES
ELECTRICAL-MECHANICAL-WATER AND WASTEWATER DESIGN

BRIDGE NO. 540004R/L
POST MILE R107.3

C. V. KANE
SAFETY ROADSIDE REST AREA REHABILITATION
SCHEMATICS AND DETAILS

SHEET EE8-1.1

DOES SD Imperial Rev. 9/02

ORIGINAL SCALE IN INCHES FOR REDUCED PLANS 0 1 2 3

UNIT 3596
PROJECT NUMBER & PHASE 08000002291

DISREGARD PRINTS BEARING EARLIER REVISION DATES → REVISION DATES (PRELIMINARY STAGE ONLY) 12/11/09 02/18/10 04/05/10 6/24/10 10/25/10 01/26/11 11/4/11 1/24/12 8/15/13 SHEET OF

18-SEP-2013 12:43

ee8_1_01.dgn

DIST.	COUNTY	ROUTE	POST MILES TOTAL PROJECT	SHEET NO.	TOTAL SHEETS
03, 08	Sac, SBd	5, 15	23.3, R107.3	297	330

Jaswinder S Gill 08-15-13
REGISTERED ELECTRICAL ENGINEER DATE

REGISTERED PROFESSIONAL ENGINEER JASWINDER GILL No. 18551 Exp. 12-31-14 ELEC STATE OF CALIFORNIA

9-16-13
PLANS APPROVAL DATE

The State of California or its officers or agents shall not be responsible for the accuracy or completeness of electronic copies of this plan sheet.

CALIFORNIA STATE FIRE MARSHAL APPROVED
Approval of this plan does not authorize or approve any omission or deviation from applicable regulations. Final approval is subject to field inspection. One set of approved plans shall be available on the project site at all times.
Reviewed by: FRANCIS SOLICH
Approval date: 09-11-13

General Notes:

A. Dimensions shown are nominal and are for reference only. Dimensions shown are maximum allowable.

B. IFS shall be 30 inches deep (nominal).

C. For one-line diagram, see sheet EE0-10.

Notes:

1. Anchor bolts per IFS manufacturer's recommendations to meet or exceed seismic Zone 4 requirements.
2. End seismic bracing per IFS manufacturer's recommendations to meet or exceed seismic Zone 4 requirements.
3. 45 kVA, 480 V primary, 208/120 V secondary, 3-phase, 4-wire.
4. 3"C, 4*4/0, 1*2G.
5. 30 kVA, 480 V primary, 208/120 V secondary, 3-phase, 4-wire.

xxx Size to fit all components.

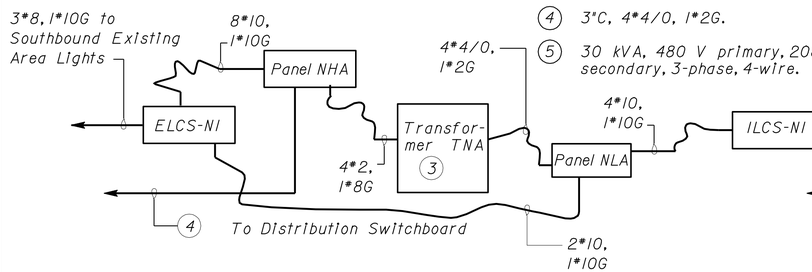

IFS1A-INTERCONNECTION DIAGRAM (COMFORT STATION A)

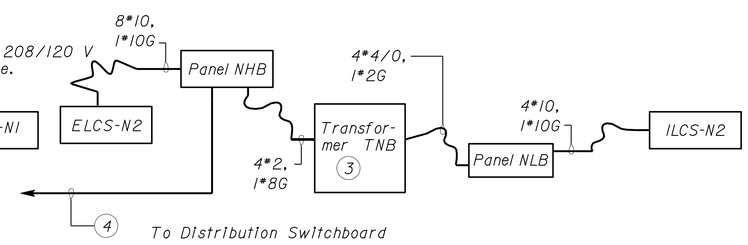

IFS1B-INTERCONNECTION DIAGRAM (COMFORT STATION B)

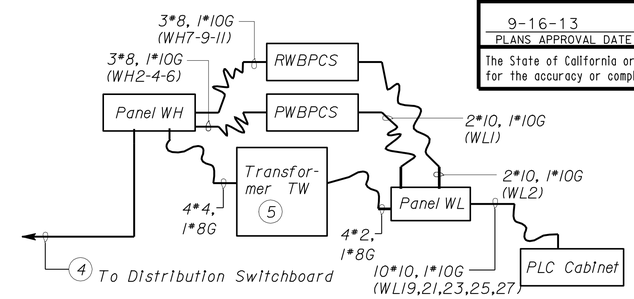

IFS3-INTERCONNECTION DIAGRAM (WATER TREATMENT BUILDING)

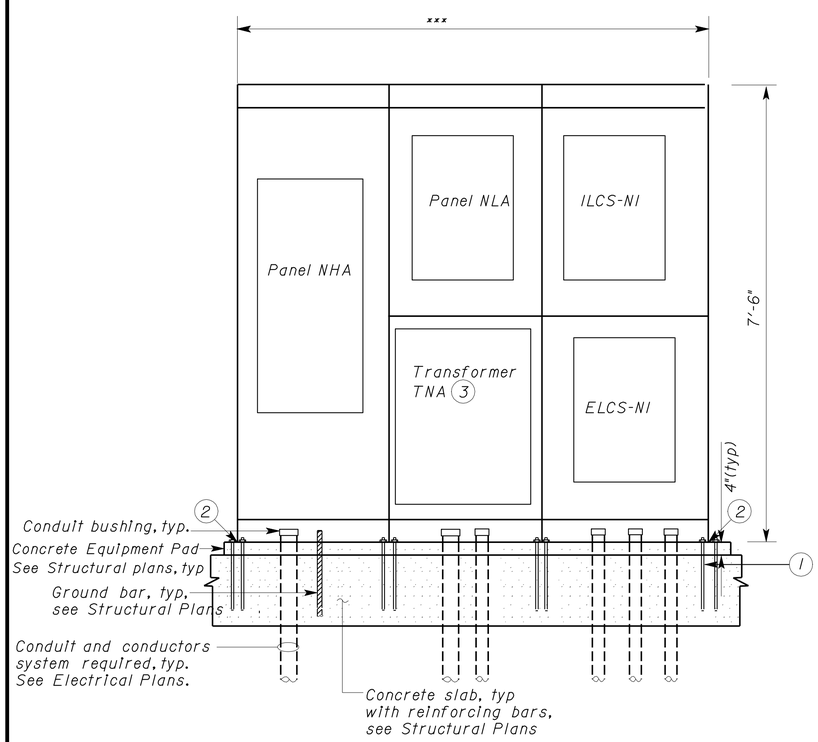

ELEVATION -IFS1A (COMFORT STATION A)

(A) NO SCALE

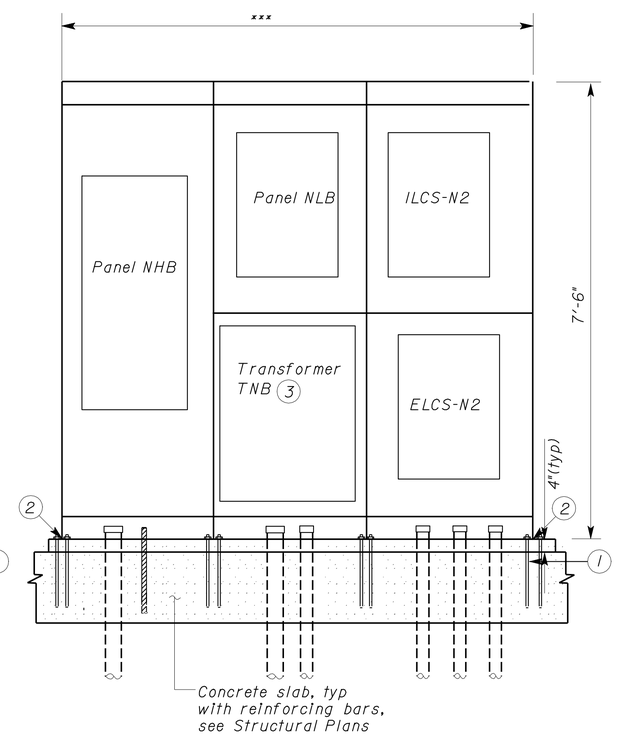

ELEVATION -IFS1B (COMFORT STATION B)

(B) NO SCALE

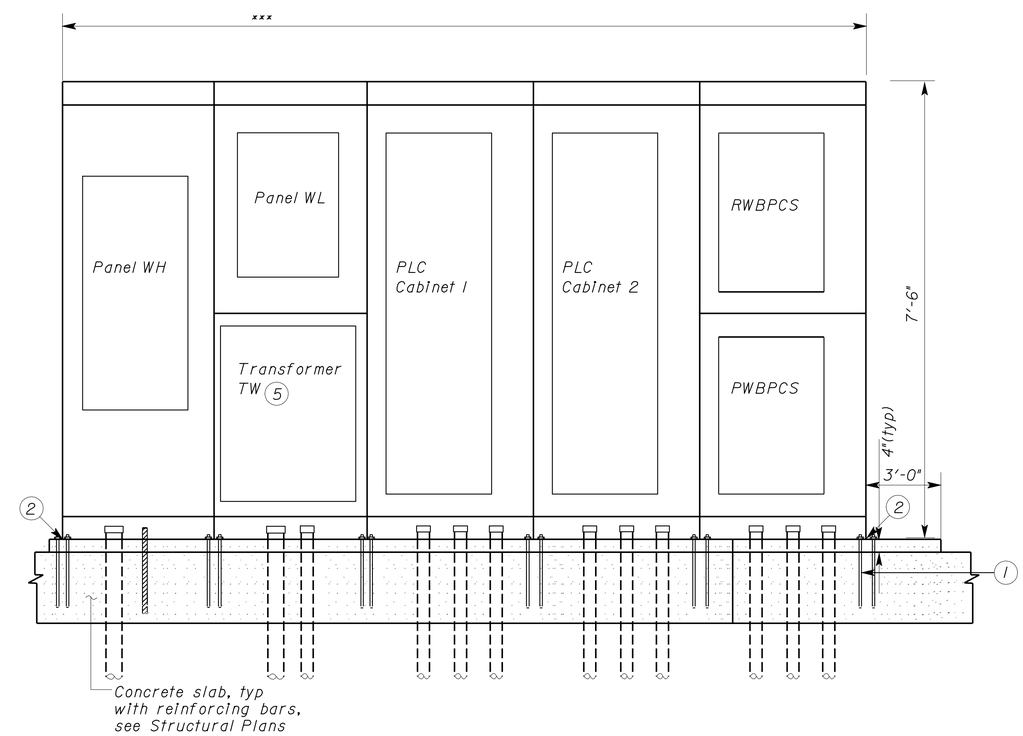

ELEVATION -IFS3 (WATER TREATMENT BUILDING)

(C) NO SCALE

THIS DRAWING ACCURATE FOR ELECTRICAL WORK ONLY

	BY	CHECKED
DESIGN	Jaswinder Gill	J. S. Sandhu
DETAILS	Ed D.Tapalla 9/09	Jaswinder Gill
QUANTITIES	Jaswinder Gill	J. S. Sandhu

STATE OF CALIFORNIA DEPARTMENT OF TRANSPORTATION

DIVISION OF ENGINEERING SERVICES
ELECTRICAL-MECHANICAL-WATER AND WASTEWATER DESIGN

BRIDGE NO. 540004R/L
POST MILE R107.3

C. V. KANE
SAFETY ROADSIDE REST AREA REHABILITATION
ELECTRICAL DETAILS

SHEET EE8-1.2

DOES SD Imperial Rev. 9/02

ORIGINAL SCALE IN INCHES FOR REDUCED PLANS 0 1 2 3

UNIT 3596
PROJECT NUMBER & PHASE 08000002291

DISREGARD PRINTS BEARING EARLIER REVISION DATES
REVISION DATES (PRELIMINARY STAGE ONLY) 12/17/09 02/18/10 04/05/10 6/14/10 10/25/10 01/25/11 11/4/11 1/3/12 8/15/13
SHEET OF

18-SEP-2013 12:43
ee8_1_02.dgn

DIST.	COUNTY	ROUTE	POST MILES TOTAL PROJECT	SHEET NO.	TOTAL SHEETS
03, 08	Sac, SBd	5, 15	23.3, R107.3	298	330

Jaswinder S Gill 08-15-13
REGISTERED ELECTRICAL ENGINEER DATE

REGISTERED PROFESSIONAL ENGINEER JASWINDER GILL No. 18551 Exp. 12-31-14 ELEC STATE OF CALIFORNIA

9-16-13
PLANS APPROVAL DATE

The State of California or its officers or agents shall not be responsible for the accuracy or completeness of electronic copies of this plan sheet.

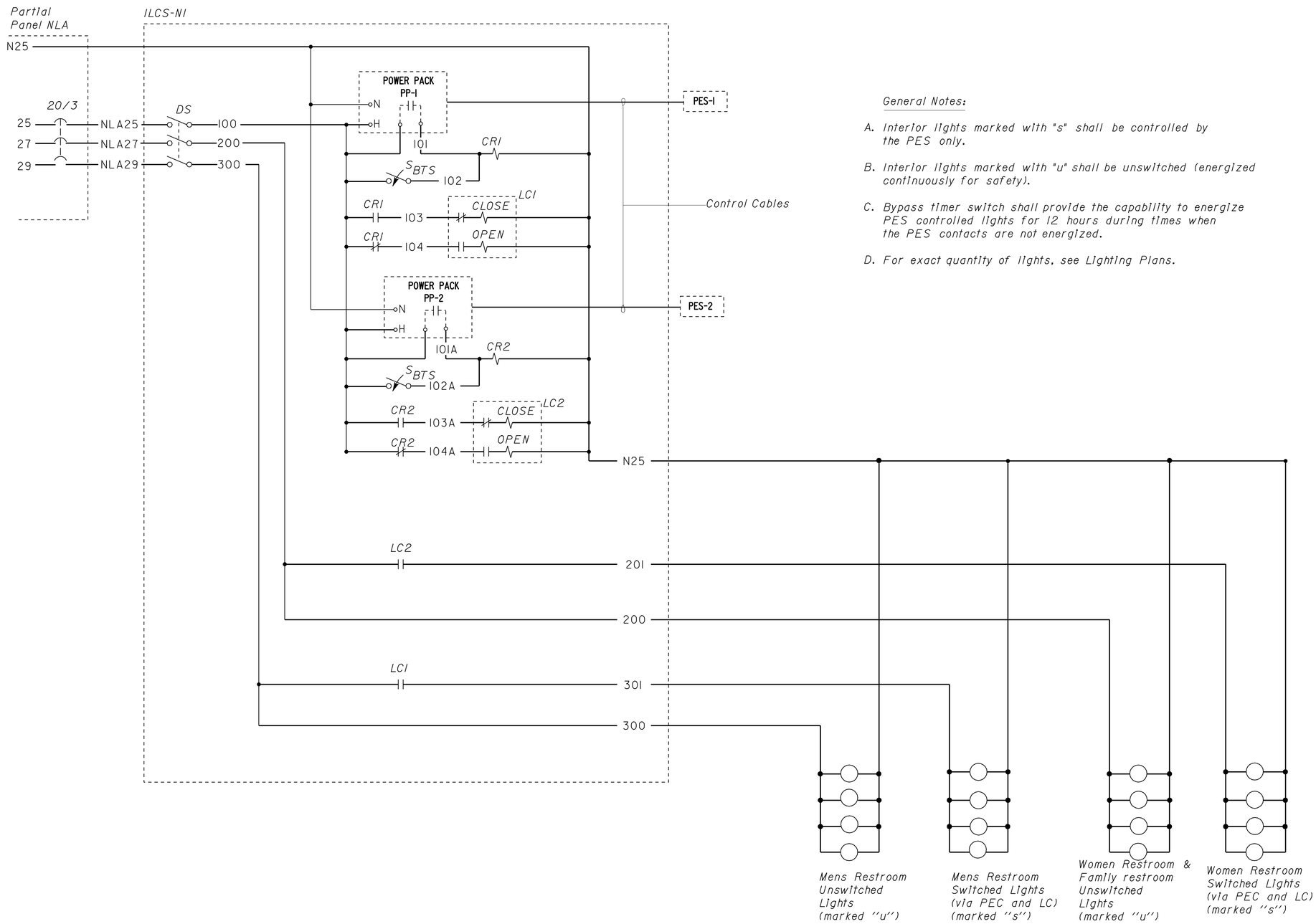

General Notes:

A. Interior lights marked with "s" shall be controlled by the PES only.

B. Interior lights marked with "u" shall be unswitched (energized continuously for safety).

C. Bypass timer switch shall provide the capability to energize PES controlled lights for 12 hours during times when the PES contacts are not energized.

D. For exact quantity of lights, see Lighting Plans.

CALIFORNIA STATE FIRE MARSHAL APPROVED
Approval of this plan does not authorize or approve any omission or deviation from applicable regulations. Final approval is subject to field inspection. One set of approved plans shall be available on the project site at all times.
Reviewed by: FRANCIS SOLICH
Approval date: 09-11-13

INTERIOR LIGHTING CONTROL STATION (ILCS-N1)
SCHEMATIC DIAGRAM

	BY	CHECKED
DESIGN	Jaswinder Gill	J. S. Sandhu
DETAILS	Ed D.Tapalla 9/09	Jaswinder Gill
QUANTITIES	Jaswinder Gill	J. S. Sandhu

STATE OF CALIFORNIA
DEPARTMENT OF TRANSPORTATION

DIVISION OF ENGINEERING SERVICES
ELECTRICAL-MECHANICAL-WATER AND WASTEWATER DESIGN

BRIDGE NO. 540004R/L
POST MILE R107.3

C. V. KANE
SAFETY ROADSIDE REST AREA REHABILITATION
INTERIOR LIGHTING SCHEMATIC DIAGRAM 1

SHEET EE8-1.3

DOES SD Imperial Rev. 9/02

ORIGINAL SCALE IN INCHES FOR REDUCED PLANS 0 1 2 3

UNIT 3596
PROJECT NUMBER & PHASE 08000002291

DISREGARD PRINTS BEARING EARLIER REVISION DATES →
REVISION DATES (PRELIMINARY STAGE ONLY) 12/17/09 02/18/10 04/05/10 6/14/10 10/25/10 01/25/11 11/4/11 1/27/12 8/15/13
SHEET OF

18-SEP-2013 12:43
ee8_1_03.dgn

DIST.	COUNTY	ROUTE	POST MILES TOTAL PROJECT	SHEET NO.	TOTAL SHEETS
03, 08	Sac, SBd	5, 15	23.3, R107.3	299	330

Jaswinder S Gill — REGISTERED ELECTRICAL ENGINEER — 08-15-13 DATE

REGISTERED PROFESSIONAL ENGINEER — JASWINDER GILL — No. 18551 — Exp. 12-31-14 — ELEC — STATE OF CALIFORNIA

9-16-13
PLANS APPROVAL DATE

The State of California or its officers or agents shall not be responsible for the accuracy or completeness of electronic copies of this plan sheet.

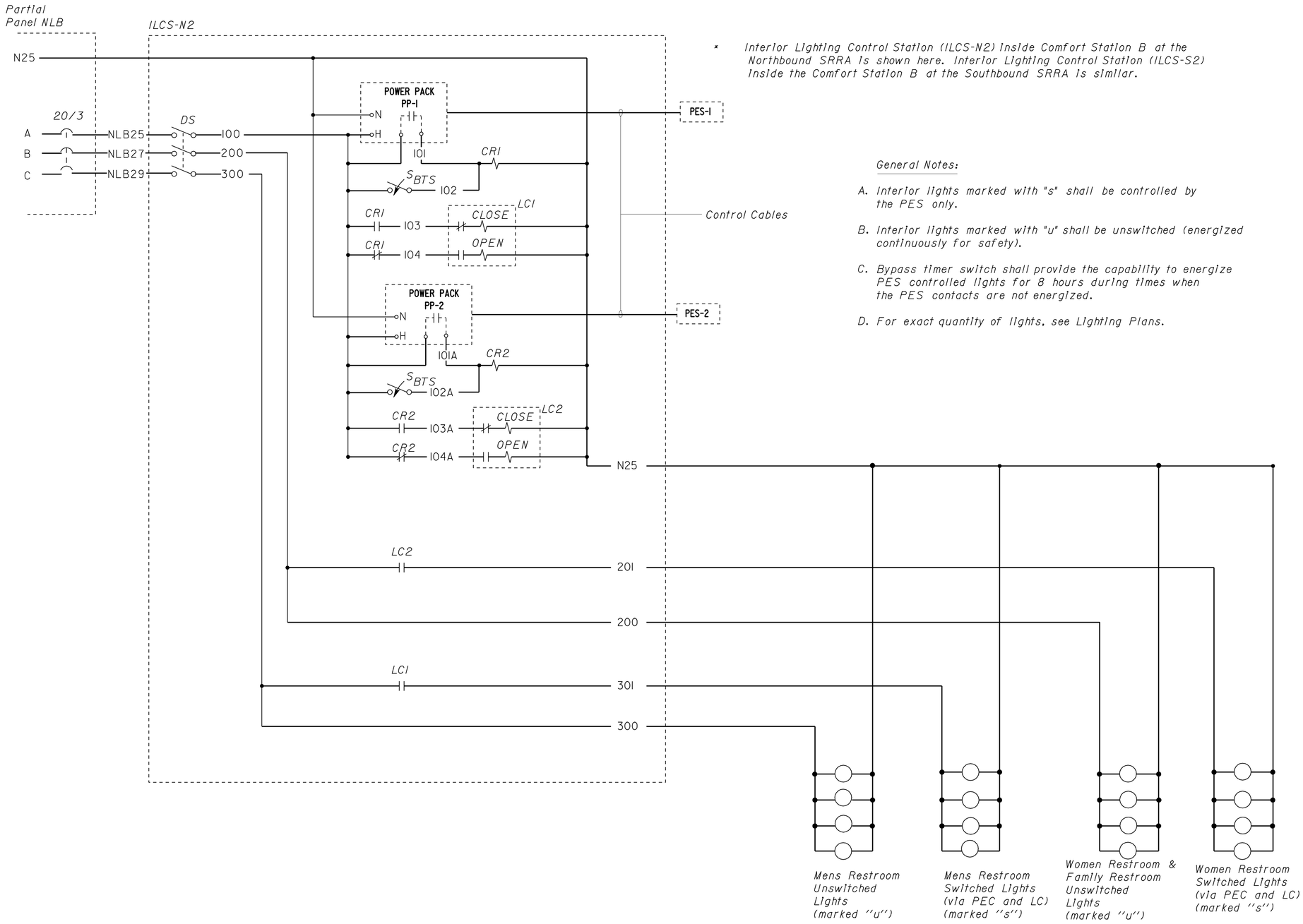

* Interior Lighting Control Station (ILCS-N2) inside Comfort Station B at the Northbound SRRA is shown here. Interior Lighting Control Station (ILCS-S2) inside the Comfort Station B at the Southbound SRRA is similar.

General Notes:

A. Interior lights marked with "s" shall be controlled by the PES only.

B. Interior lights marked with "u" shall be unswitched (energized continuously for safety).

C. Bypass timer switch shall provide the capability to energize PES controlled lights for 8 hours during times when the PES contacts are not energized.

D. For exact quantity of lights, see Lighting Plans.

CALIFORNIA STATE FIRE MARSHAL APPROVED

Approval of this plan does not authorize or approve any omission or deviation from applicable regulations. Final approval is subject to field inspection. One set of approved plans shall be available on the project site at all times.

Reviewed by: FRANCIS SOLICH
Approval date: 09-11-13

INTERIOR LIGHTING CONTROL STATION (ILCS-N2)
SCHEMATIC DIAGRAM

	BY	CHECKED
DESIGN	Jaswinder Gill	J. S. Sandhu
DETAILS	Ed D.Tapalla 9/09	Jaswinder Gill
QUANTITIES	Jaswinder Gill	J. S. Sandhu

STATE OF CALIFORNIA DEPARTMENT OF TRANSPORTATION

DIVISION OF ENGINEERING SERVICES
ELECTRICAL-MECHANICAL-WATER AND WASTEWATER DESIGN

BRIDGE NO. 540004R/L
POST MILE R107.3

C. V. KANE
SAFETY ROADSIDE REST AREA REHABILITATION
INTERIOR LIGHTING SCHEMATIC DIAGRAM 2

SHEET EE8-1.4

DOES SD Imperial Rev. 9/02

ORIGINAL SCALE IN INCHES FOR REDUCED PLANS 0 1 2 3

UNIT 3596
PROJECT NUMBER & PHASE 08000002291

DISREGARD PRINTS BEARING EARLIER REVISION DATES →
REVISION DATES (PRELIMINARY STAGE ONLY) 12/17/09 02/18/10 04/05/10 5/14/10 10/25/10 01/25/11 11/4/11 1/3/12 8/15/13

SHEET OF

18-SEP-2013 12:43

ee8_1_04.dgn

DIST.	COUNTY	ROUTE	POST MILES TOTAL PROJECT	SHEET NO.	TOTAL SHEETS
03, 08	Sac, SBd	5, 15	23.3, R107.3	300	330

REGISTERED ELECTRICAL ENGINEER — 08-15-13 DATE

REGISTERED PROFESSIONAL ENGINEER — JASWINDER GILL — No. 18551 — Exp. 12-31-14 — ELEC — STATE OF CALIFORNIA

9-16-13
PLANS APPROVAL DATE

The State of California or its officers or agents shall not be responsible for the accuracy or completeness of electronic copies of this plan sheet.

CALIFORNIA STATE FIRE MARSHAL APPROVED
Approval of this plan does not authorize or approve any omission or deviation from applicable regulations. Final approval is subject to field inspection. One set of approved plans shall be available on the project site at all times.
Reviewed by: FRANCIS SOLICH
Approval date: 09-11-13

General Notes:

A. *All exterior lights shall be controlled by PEU and the time clock (on one hour before dusk and off one hour after dawn).*

B. *Install a warning plate on all the exterior door of the lighting control station. Inscription shall read " DISCONNECT CIRCUIT BREAKERS 2, 4, 6, AND 8 FROM PANELBOARD NHA AND CIRCUIT BREAKER 5 FROM PANELBOARD NLA TO DE-ENERGIZE POWER TO THE CONTROL STATION".*

Exterior Lighting Control Station-N1

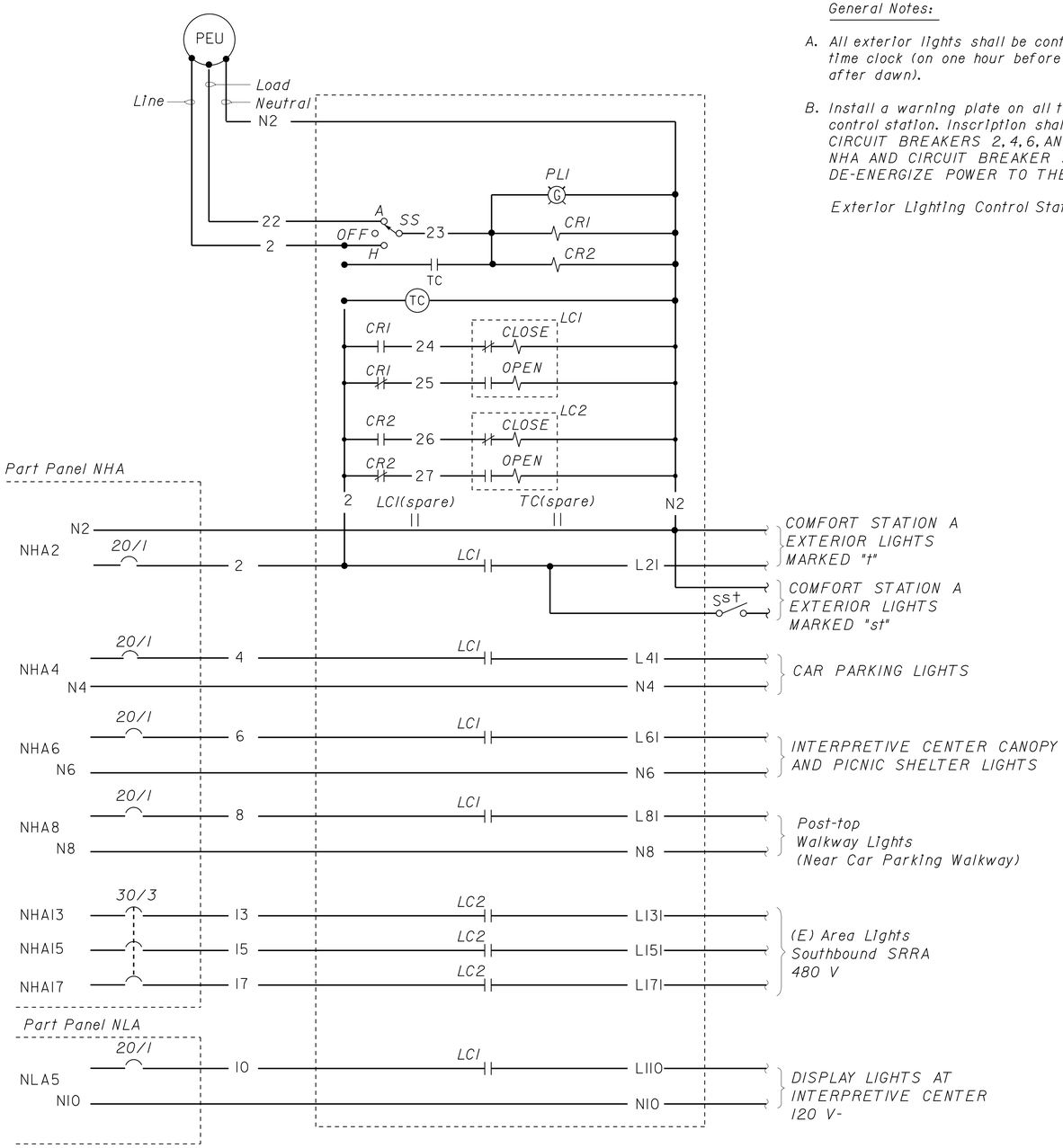

EXTERIOR LIGHTING CONTROL STATION (ELCS-N1) SCHEMATIC DIAGRAM

Exterior Lighting Control Station-N2

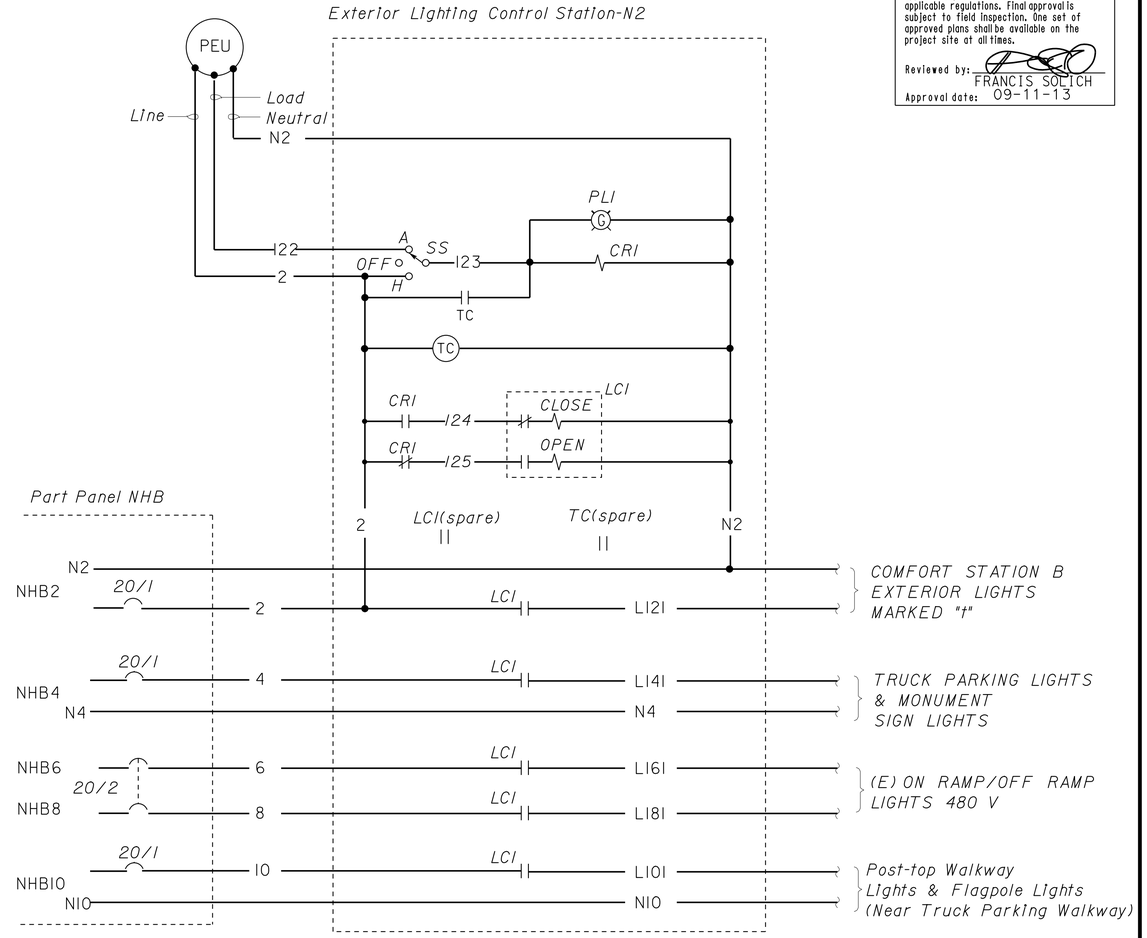

EXTERIOR LIGHTING CONTROL STATION (ELCS-N2) SCHEMATIC DIAGRAM

DESIGN	BY Jaswinder Gill	CHECKED J. S. Sandhu	
DETAILS	BY Ed D.Tapalla 9/09	CHECKED Jaswinder Gill	
QUANTITIES	BY Jaswinder Gill	CHECKED J. S. Sandhu	

STATE OF CALIFORNIA DEPARTMENT OF TRANSPORTATION

DIVISION OF ENGINEERING SERVICES
ELECTRICAL-MECHANICAL-WATER AND WASTEWATER DESIGN

BRIDGE NO. 540004R/L
POST MILE R107.3

C. V. KANE
SAFETY ROADSIDE REST AREA REHABILITATION
EXTERIOR LIGHTING SCHEMATIC DIAGRAM

SHEET EE8-1.5

DOES SD Imperial Rev. 9/02

ORIGINAL SCALE IN INCHES FOR REDUCED PLANS 0 1 2 3

UNIT 3596
PROJECT NUMBER & PHASE 08000002291

DISREGARD PRINTS BEARING EARLIER REVISION DATES → 12/17/09 02/18/10 04/08/10 6/24/10 10/28/10 01/28/11 11/4/11 1/27/12 8/15/13

SHEET OF

18-SEP-2013 13:11

ee8_1_05.dgn