Dist	COUNTY	LOCATION CODE	POST MILES TOTAL PROJECT	SHEET No.	TOTAL SHEETS
03, 08	Sac, SBd	5, 15	23.3, R107.3	1	330

STATE OF CALIFORNIA

DEPARTMENT OF TRANSPORTATION

HSNHPIG-015-2(037)E

PROJECT PLANS FOR BUILDING CONSTRUCTION ON STATE HIGHWAY

IN SAN BERNARDINO COUNTY ON ROUTE 15 ABOUT 30 MILES EAST FROM BARSTOW AT C. V. KANE SAFETY ROADSIDE REST AREA AND IN SACRAMENTO COUNTY ON ROUTE 5 ABOUT 0.2 MILES SOUTH OF ROUTE 275

TO BE SUPPLEMENTED BY STANDARD PLANS DATED MAY 2006

INDEX OF PLANS

SHEET No.	DESCRIPTION
1	TITLE AND LOCATION MAP
2	TYPICAL CROSS SECTIONS
3	KEY MAP AND LINE INDEX
4-6	LAYOUTS
7	PROFILES AND SUPERELEVATION DIAGRAM
8-11	CONSTRUCTION DETAILS
12-13	CONTOUR GRADING
14-18	DRAINAGE PLANS, PROFILES, DETAILS AND QUANTITIES
19-20	UTILITY PLANS
21	CONSTRUCTION AREA SIGNS
22-24	PAVEMENT DELINEATION AND SIGN PLANS
25	PAVEMENT DELINEATION QUANTITIES
26-28	SIGN DETAIL PLAN AND QUANTITIES
29-30	SUMMARY OF QUANTITIES
31-44	LANDSCAPE DETAILS
45-73	REVISED AND NEW STANDARD PLANS

BUILDING PLANS

74	GENERAL PLAN
75-149	ARCHITECTURAL PLANS
150-202	STRUCTURAL PLANS
203-216	MECHANICAL PLANS
217-302	ELECTRICAL PLANS
303-318	WATER AND WASTE WATER PLANS
319-330	SANITARY SEWER PLANS

THE STANDARD PLANS LIST APPLICABLE TO THIS CONTRACT IS INCLUDED IN THE NOTICE TO BIDDERS AND SPECIAL PROVISIONS BOOK.

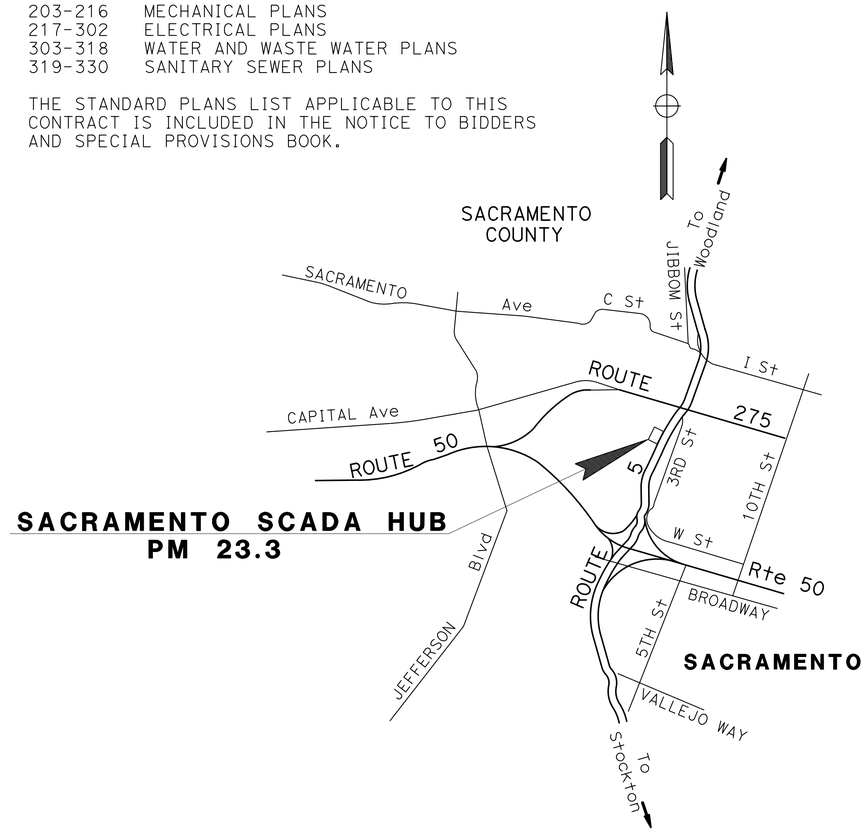

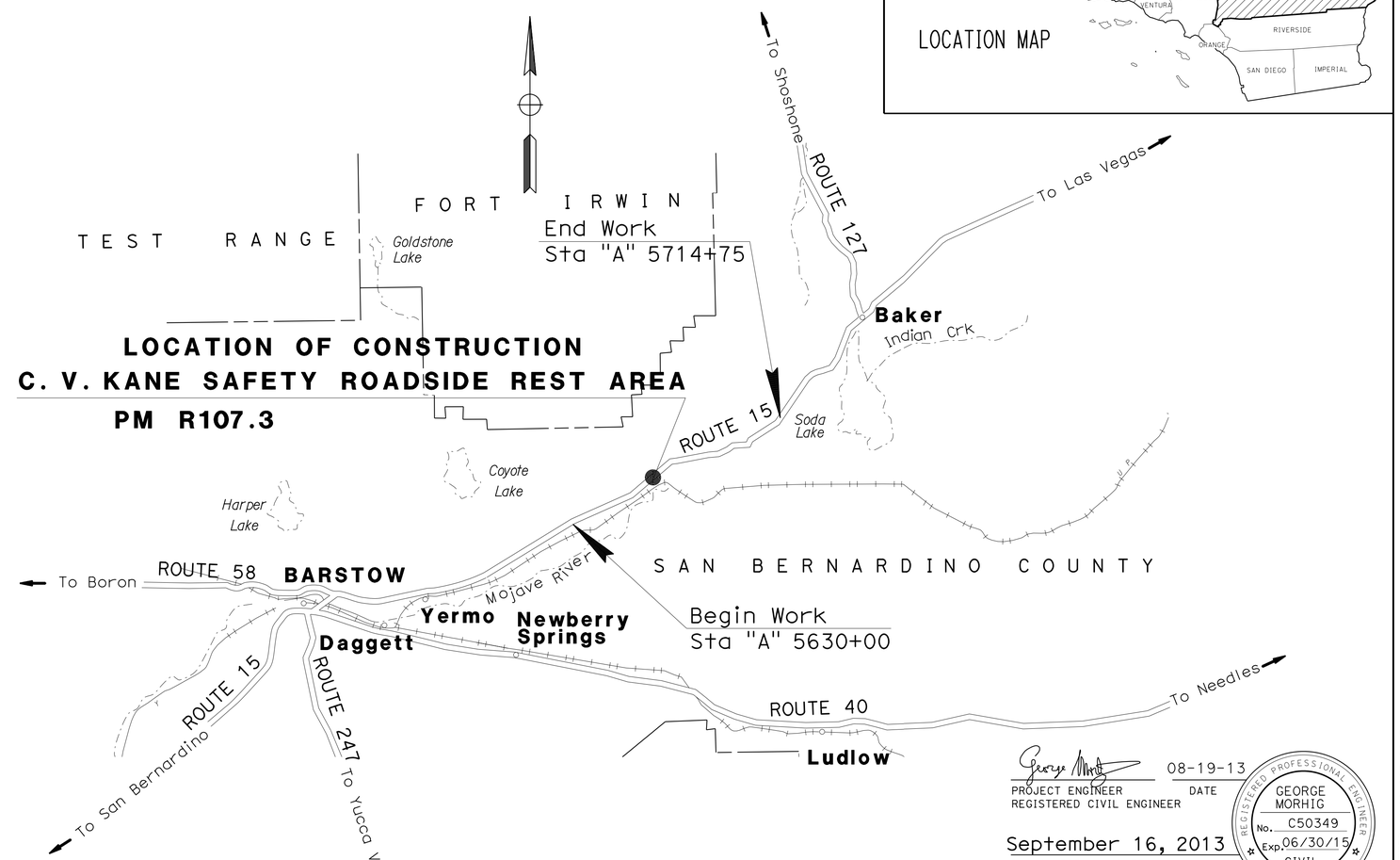

NO SCALE

George Morhig 08-19-13
PROJECT ENGINEER DATE
REGISTERED CIVIL ENGINEER

REGISTERED PROFESSIONAL ENGINEER GEORGE MORHIG No. C50349 Exp. 06/30/15 CIVIL STATE OF CALIFORNIA

September 16, 2013
PLANS APPROVAL DATE

THE STATE OF CALIFORNIA OR ITS OFFICERS OR AGENTS SHALL NOT BE RESPONSIBLE FOR THE ACCURACY OR COMPLETENESS OF SCANNED COPIES OF THIS PLAN SHEET.

THE CONTRACTOR SHALL POSSESS THE CLASS (OR CLASSES) OF LICENSE AS SPECIFIED IN THE "NOTICE TO BIDDERS."

PROJECT MANAGER MARK LANCASTER
DESIGN ENGINEER JOHN STANTON

CONTRACT No.	08-0G8404
PROJECT ID	0800000229

LAST REVISION 08-19-13 DATE PLOTTED => 08-OCT-2013 TIME PLOTTED => 10:48

Dist	COUNTY	ROUTE	POST MILES TOTAL PROJECT	SHEET No.	TOTAL SHEETS
03, 08	Sac, SBd	5, 15	23.3, R107.3	2	330

REGISTERED CIVIL ENGINEER 08-19-13 DATE

9-16-13
PLANS APPROVAL DATE

REGISTERED PROFESSIONAL ENGINEER GEORGE MORHIG No. C50349 Exp. 06/30/15 CIVIL STATE OF CALIFORNIA

THE STATE OF CALIFORNIA OR ITS OFFICERS OR AGENTS SHALL NOT BE RESPONSIBLE FOR THE ACCURACY OR COMPLETENESS OF SCANNED COPIES OF THIS PLAN SHEET.

NOTES:

1. DIMENSIONS SHOWN ARE SUBJECT TO TOLERANCES SPECIFIED IN THE STANDARD SPECIFICATIONS.
2. FOR HMA DIKE TYPE E DETAIL, SEE 2006 Std PLAN A87B.
3. FOR TYPE A1 CURB, SEE RSP A87A.
4. SUPERELEVATIONS AS SHOWN OR AS DIRECTED BY THE ENGINEER.
5. ALL TYPE E DIKES ARE MINOR HMA.

DESIGN DESIGNATION (ROUTE 15)

ADT (2014)	=	2,400	D	=	12%
ADT (2034)	=	3,800	T	=	24%
DHV	=	450	V	=	65 MPH
ESAL	=	13,500,000	TI	=	12

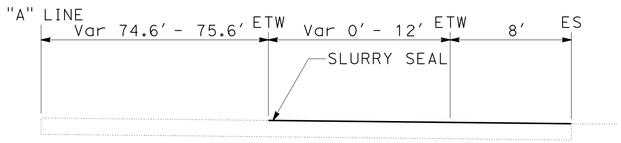

NORTH BOUND TRUCK PARKING AREA
Sta 5656+39.54 TO Sta 5658+02.34
AND
Sta 5680+76.42 TO 5684+91.76

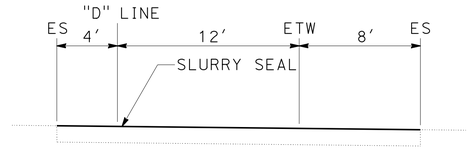

NORTH BOUND TRUCK PARKING AREA
Sta 0+00.00 TO Sta 6+86.85
AND
Sta 16+09.36 TO 24+52.52

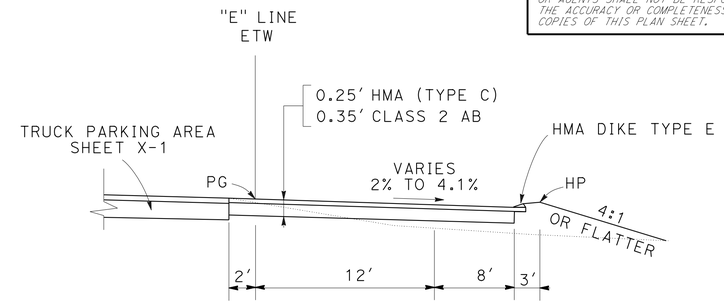

AUTO ROAD
Sta 0+00.00 TO Sta 1+80.00 AND
STA 12+30.00 TO 13+98.00

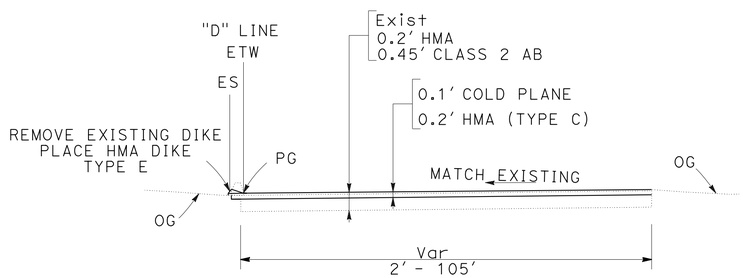

NORTH BOUND TRUCK PARKING AREA
Sta 7+31.05 TO Sta 8+35.61
AND
Sta 15+57.44 TO 16+09.36

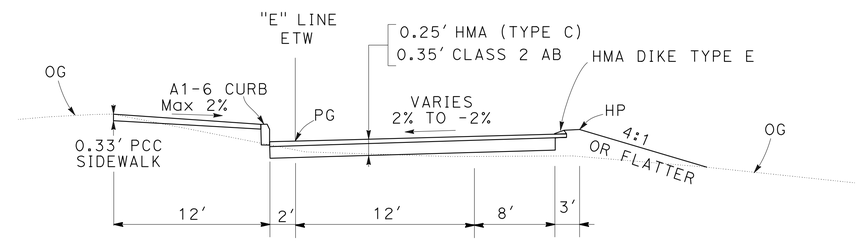

AUTO ROAD
STA 1+80.00 TO 6+00.00
AND Sta 10+26.76 TO Sta 12+30.00

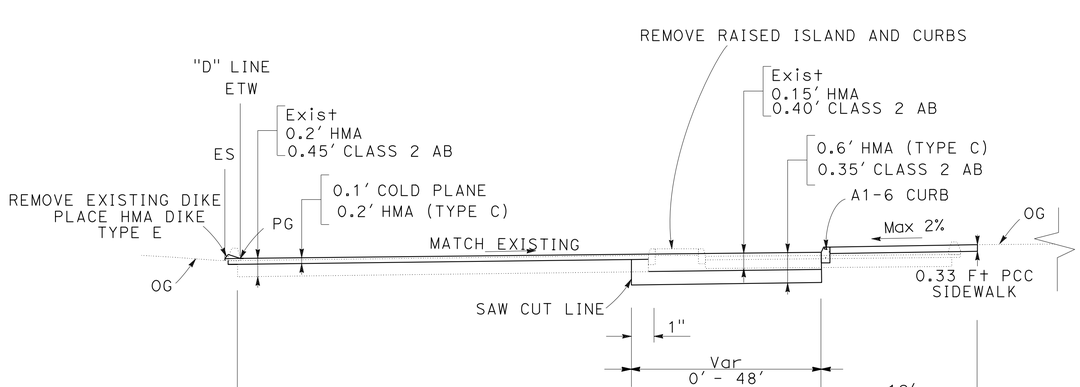

NORTH BOUND TRUCK PARKING AREA
Sta 8+35.61 TO Sta 15+57.44

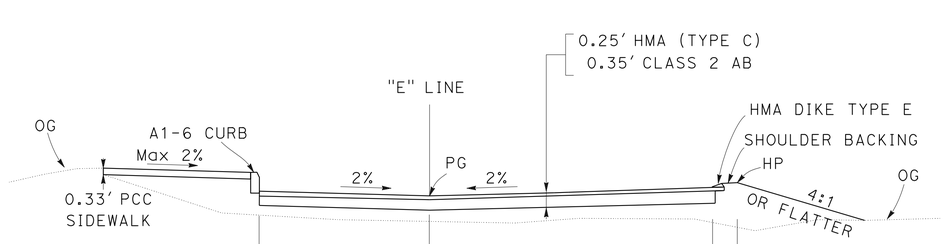

AUTO PARKING AREA
Sta 6+00.00 TO Sta 10+26.76

ROUTE 15
C. V. KANE SAFETY ROADSIDE REST AREA

TYPICAL CROSS SECTIONS

NO SCALE

X-1

STATE OF CALIFORNIA - DEPARTMENT OF TRANSPORTATION
Caltrans
DESIGN

FUNCTIONAL SUPERVISOR: GEORGE MORGHIG
CALCULATED-DESIGNED BY: GEORGE MORGHIG
CHECKED BY
REVISED BY
DATE REVISED

LAST REVISION 08-19-13 | DATE PLOTTED => 18-SEP-2013 | TIME PLOTTED => 10:32

Dist	COUNTY	ROUTE	POST MILES TOTAL PROJECT	SHEET No.	TOTAL SHEETS
03, 08	Sac, SBd	5, 15	23.3, R107.3	3	330

REGISTERED CIVIL ENGINEER 08-19-13 DATE

9-16-13
PLANS APPROVAL DATE

REGISTERED PROFESSIONAL ENGINEER GEORGE MORHIG No. C50349 Exp. 06/30/15 CIVIL STATE OF CALIFORNIA

THE STATE OF CALIFORNIA OR ITS OFFICERS OR AGENTS SHALL NOT BE RESPONSIBLE FOR THE ACCURACY OR COMPLETENESS OF SCANNED COPIES OF THIS PLAN SHEET.

NOTE:

FOR ACCURATE RIGHT OF WAY DATA, CONTACT RIGHT OF WAY ENGINEERING AT THE DISTRICT OFFICE.

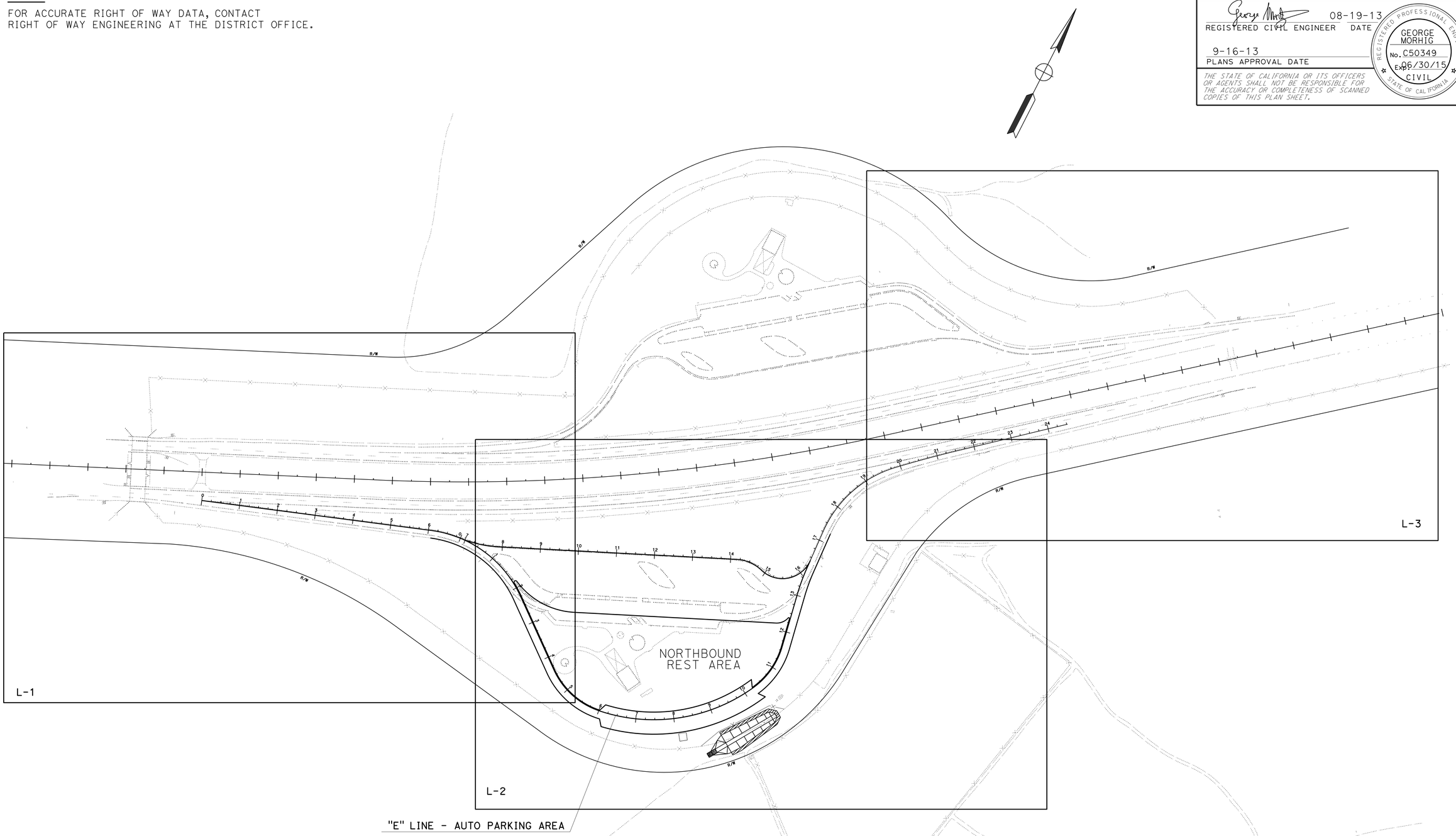

KEY MAP AND LINE INDEX

NO SCALE

K-1

REVISED BY	DATE REVISED
GEORGE MORGHIG	GEORGE MORGHIG

CALCULATED-DESIGNED BY: GEORGE MORGHIG
CHECKED BY: GEORGE MORGHIG

FUNCTIONAL SUPERVISOR: GEORGE MORGHIG

STATE OF CALIFORNIA - DEPARTMENT OF TRANSPORTATION
Caltrans®
DESIGN

LAST REVISION 08-19-13 | DATE PLOTTED => 18-SEP-2013 | TIME PLOTTED => 10:32

Dist	COUNTY	ROUTE	POST MILES TOTAL PROJECT	SHEET No.	TOTAL SHEETS
03, 08	Sac, SBd	5, 15	23.3, R107.3	4	330

REGISTERED CIVIL ENGINEER 08-19-13 DATE

9-16-13
PLANS APPROVAL DATE

REGISTERED PROFESSIONAL ENGINEER GEORGE MORHIG No. C50349 Exp. 06/30/15 CIVIL STATE OF CALIFORNIA

THE STATE OF CALIFORNIA OR ITS OFFICERS OR AGENTS SHALL NOT BE RESPONSIBLE FOR THE ACCURACY OR COMPLETENESS OF SCANNED COPIES OF THIS PLAN SHEET.

NOTES:

1. FOR ACCURATE RIGHT OF WAY DATA, CONTACT RIGHT OF WAY ENGINEERING AT THE DISTRICT OFFICE.
2. PERMANENT FENCE (TYPE DESERT TORTOISE) SHALL BE MOUNTED ON EXISTING R/W FENCE, SEE SHEET LD-8 FOR DETAILS.

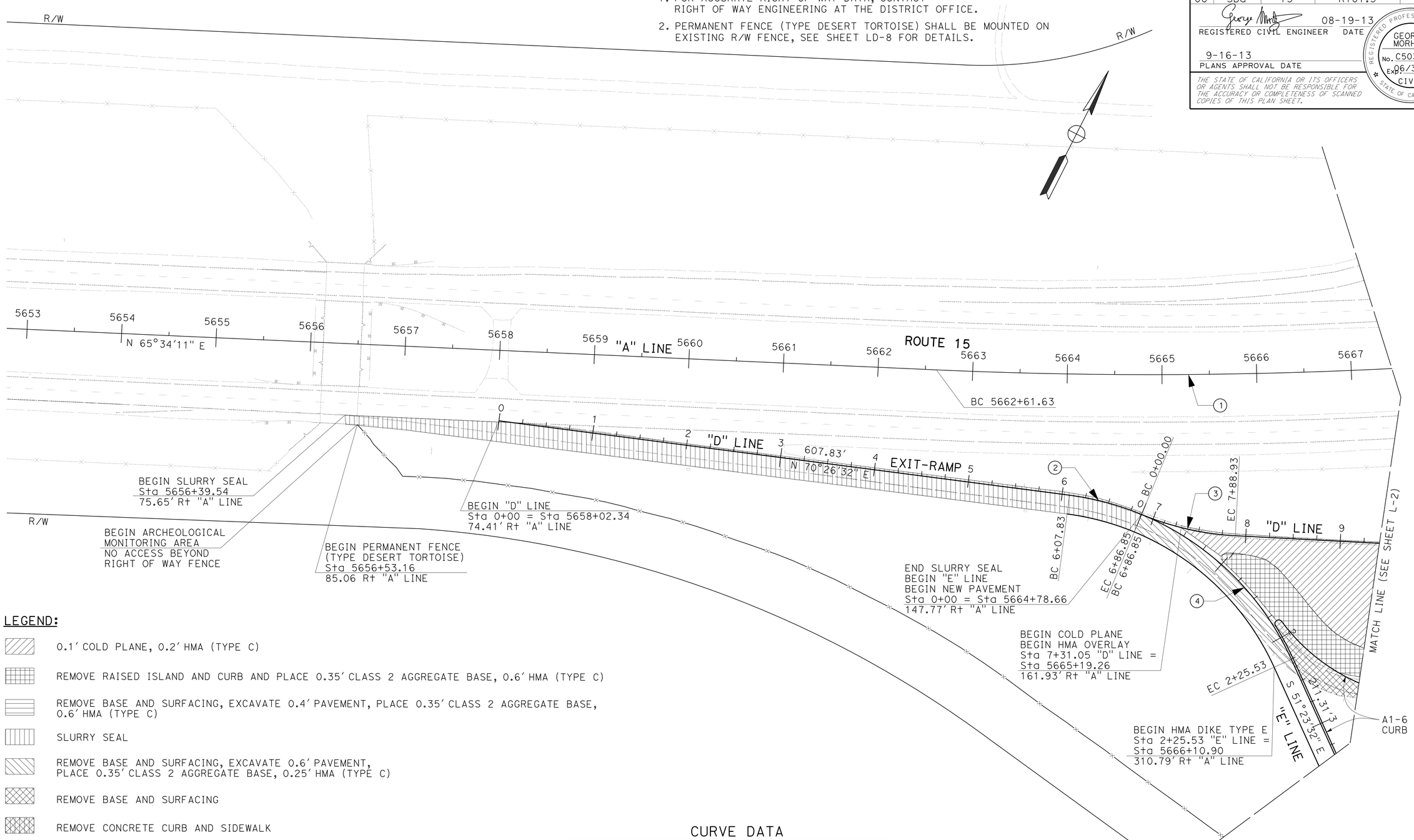

LEGEND:

- 0.1' COLD PLANE, 0.2' HMA (TYPE C)
- REMOVE RAISED ISLAND AND CURB AND PLACE 0.35' CLASS 2 AGGREGATE BASE, 0.6' HMA (TYPE C)
- REMOVE BASE AND SURFACING, EXCAVATE 0.4' PAVEMENT, PLACE 0.35' CLASS 2 AGGREGATE BASE, 0.6' HMA (TYPE C)
- SLURRY SEAL
- REMOVE BASE AND SURFACING, EXCAVATE 0.6' PAVEMENT, PLACE 0.35' CLASS 2 AGGREGATE BASE, 0.25' HMA (TYPE C)
- REMOVE BASE AND SURFACING
- REMOVE CONCRETE CURB AND SIDEWALK

CURVE DATA

No.	R	Δ	T	L
1	5062.00'	14°57'23"	664.46'	1321.36'
2	300.30'	15°4'36"	39.74'	79.02'
3	300.00'	19°29'42"	51.54'	102.08'
4	300.00'	43°4'26"	118.40'	225.53'

LAYOUT

SCALE: 1" = 50'

L-1

REVISED BY	DATE REVISED
GEORGE MORGHIG	GEORGE MORGHIG
CALCULATED-DESIGNED BY	CHECKED BY
FUNCTIONAL SUPERVISOR	GEORGE MORGHIG

STATE OF CALIFORNIA - DEPARTMENT OF TRANSPORTATION

Caltrans

DESIGN

LAST REVISION 08-19-13 | DATE PLOTTED => 18-SEP-2013 | TIME PLOTTED => 10:32

Dist	COUNTY	ROUTE	POST MILES TOTAL PROJECT	SHEET No.	TOTAL SHEETS
03, 08	Sac, SBd	5, 15	23.3, R107.3	5	330

REGISTERED CIVIL ENGINEER 08-19-13 DATE

9-16-13
PLANS APPROVAL DATE

REGISTERED PROFESSIONAL ENGINEER GEORGE MORHIG No. C50349 Exp. 06/30/15 CIVIL STATE OF CALIFORNIA

THE STATE OF CALIFORNIA OR ITS OFFICERS OR AGENTS SHALL NOT BE RESPONSIBLE FOR THE ACCURACY OR COMPLETENESS OF SCANNED COPIES OF THIS PLAN SHEET.

NOTES:

1. FOR ACCURATE RIGHT OF WAY DATA, CONTACT RIGHT OF WAY ENGINEERING AT THE DISTRICT OFFICE.
2. FOR FENCE DETAILS, SEE 2006 Std PLAN A86.

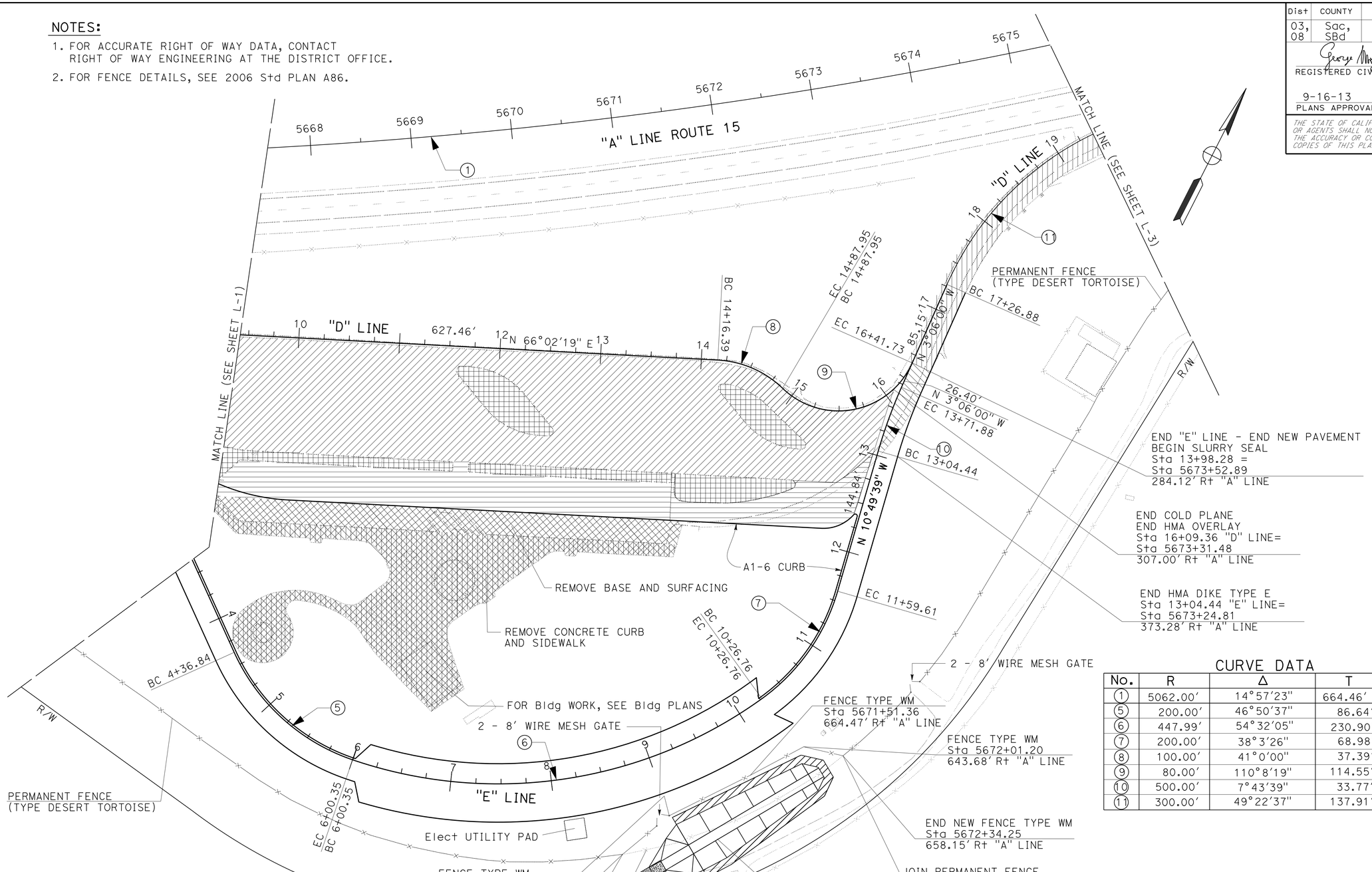

CURVE DATA

No.	R	Δ	T	L
1	5062.00'	14°57'23"	664.46'	1321.36'
5	200.00'	46°50'37"	86.64'	163.51'
6	447.99'	54°32'05"	230.90'	426.41'
7	200.00'	38°3'26"	68.98'	132.85'
8	100.00'	41°0'00"	37.39'	71.56'
9	80.00'	110°8'19"	114.55'	153.78'
10	500.00'	7°43'39"	33.77'	67.44'
11	300.00'	49°22'37"	137.91'	258.54'

LAYOUT

SCALE: 1" = 50'

L-2

STATE OF CALIFORNIA - DEPARTMENT OF TRANSPORTATION
Caltrans®
DESIGN

FUNCTIONAL SUPERVISOR: GEORGE MORHIG
CALCULATED-DESIGNED BY: GEORGE MORHIG
CHECKED BY:
REVISED BY:
DATE REVISED:

LAST REVISION 08-19-13 | DATE PLOTTED => 11-OCT-2013 | TIME PLOTTED => 09:16

Dist	COUNTY	ROUTE	POST MILES TOTAL PROJECT	SHEET No.	TOTAL SHEETS
03, 08	Sac, SBd	5, 15	23.3, R107.3	6	330

REGISTERED CIVIL ENGINEER 08-19-13 DATE

9-16-13
PLANS APPROVAL DATE

REGISTERED PROFESSIONAL ENGINEER GEORGE MORHIG No. C50349 Exp. 06/30/15 CIVIL STATE OF CALIFORNIA

THE STATE OF CALIFORNIA OR ITS OFFICERS OR AGENTS SHALL NOT BE RESPONSIBLE FOR THE ACCURACY OR COMPLETENESS OF SCANNED COPIES OF THIS PLAN SHEET.

NOTE:

FOR ACCURATE RIGHT OF WAY DATA, CONTACT RIGHT OF WAY ENGINEERING AT THE DISTRICT OFFICE.

CURVE DATA

No.	R	Δ	T	L
1	5062.00′	14°57′23"	664.46′	1321.36′
11	300.00′	49°22′37"	137.91′	258.54′
12	3000.00′	3°11′29"	83.57′	167.10′

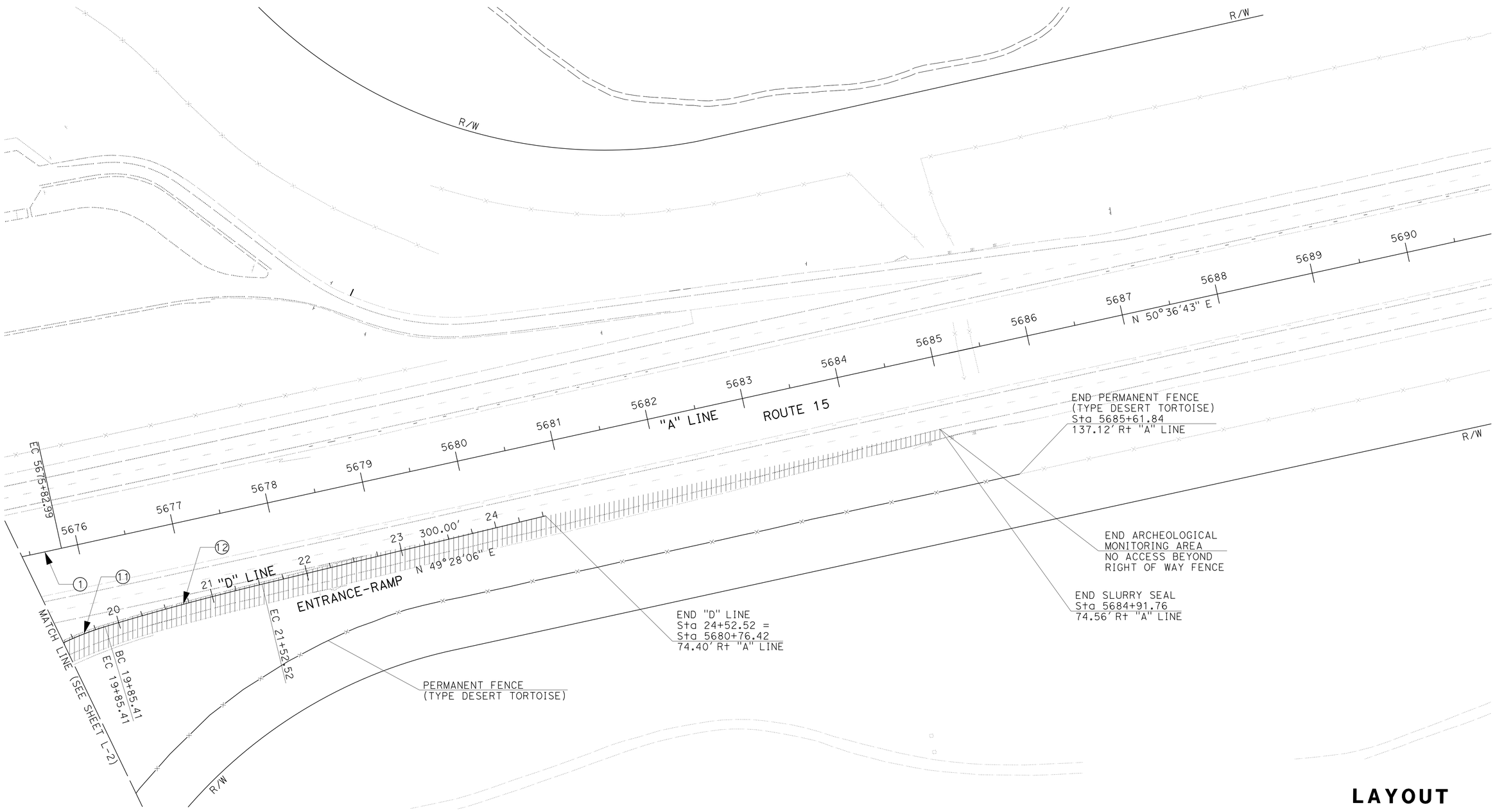

LAYOUT

SCALE: 1" = 50′ **L-3**

STATE OF CALIFORNIA - DEPARTMENT OF TRANSPORTATION
Caltrans
DESIGN

FUNCTIONAL SUPERVISOR: RENEE SASSE
CALCULATED-DESIGNED BY: SAMER GEORGES
CHECKED BY: RENEE SASSE
REVISED BY
DATE REVISED

LAST REVISION 08-19-13
DATE PLOTTED => 18-SEP-2013
TIME PLOTTED => 10:33

Dist	COUNTY	ROUTE	POST MILES TOTAL PROJECT	SHEET No.	TOTAL SHEETS
03, 08	Sac, SBd	5, 15	23.3, R107.3	7	330

REGISTERED CIVIL ENGINEER 08-19-13 DATE

9-16-13
PLANS APPROVAL DATE

REGISTERED PROFESSIONAL ENGINEER GEORGE MORHIG No. C50349 Exp. 06/30/15 CIVIL STATE OF CALIFORNIA

THE STATE OF CALIFORNIA OR ITS OFFICERS OR AGENTS SHALL NOT BE RESPONSIBLE FOR THE ACCURACY OR COMPLETENESS OF SCANNED COPIES OF THIS PLAN SHEET.

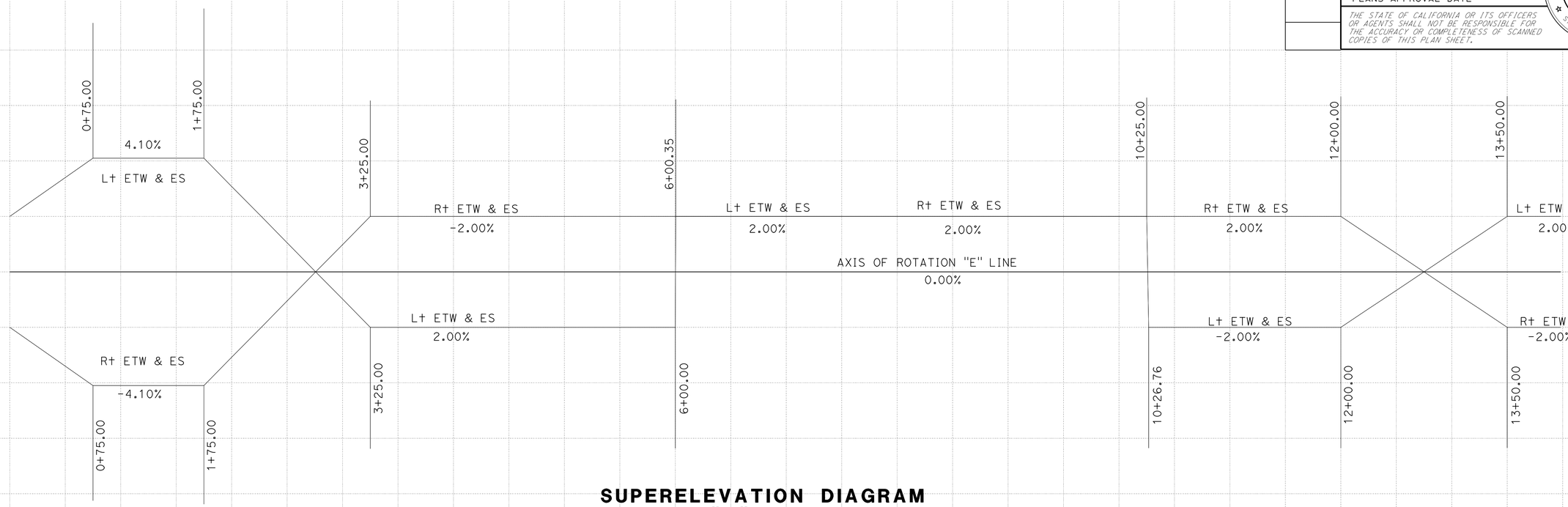

SUPERELEVATION DIAGRAM "E" LINE

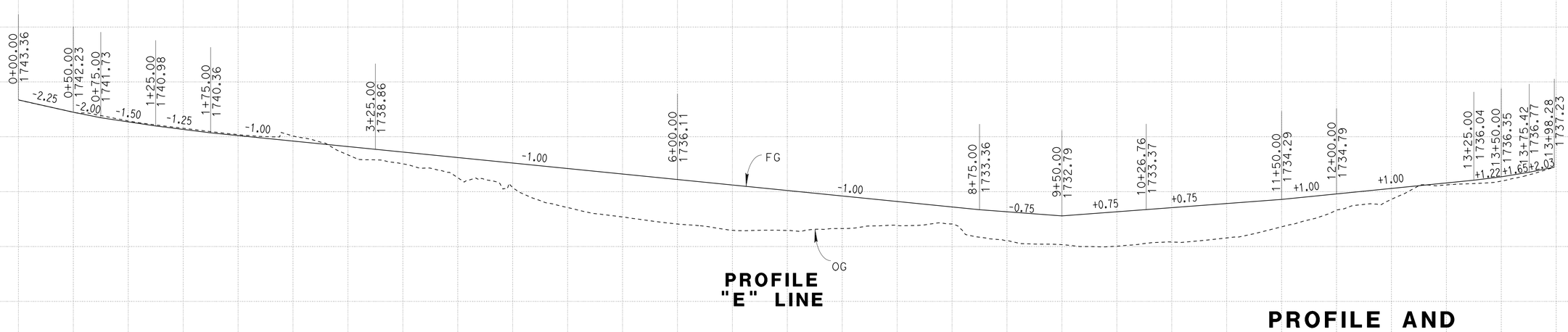

PROFILE "E" LINE

PROFILE AND SUPERELEVATION DIAGRAM

SCALE: Horiz 1" = 50'
Vert 1" = 5'

PS-1

STATION	0+00	50	1+00	50	2+00	50	3+00	50	4+00	50	5+00	50	6+00	50	7+00	50	8+00	50	9+00	50	10+00	50	11+00	50	12+00	50	13+00	50	TOTAL
CY Exc																													
CY Emb																													

STATE OF CALIFORNIA - DEPARTMENT OF TRANSPORTATION
Caltrans DESIGN

FUNCTIONAL SUPERVISOR: RENEE SASSE
CALCULATED-DESIGNED BY: SAMER GEORGES
CHECKED BY: RENEE SASSE
REVISED BY
DATE REVISED

LAST REVISION 08-19-13
DATE PLOTTED => 18-SEP-2013
TIME PLOTTED => 10:33

Dist	COUNTY	ROUTE	POST MILES TOTAL PROJECT	SHEET No.	TOTAL SHEETS
03, 08	Sac, SBd	5, 15	23.3, R107.3	8	330

REGISTERED CIVIL ENGINEER 08-19-13 DATE

9-16-13
PLANS APPROVAL DATE

REGISTERED PROFESSIONAL ENGINEER GEORGE MORHIG No. C50349 Exp. 06/30/15 CIVIL STATE OF CALIFORNIA

THE STATE OF CALIFORNIA OR ITS OFFICERS OR AGENTS SHALL NOT BE RESPONSIBLE FOR THE ACCURACY OR COMPLETENESS OF SCANNED COPIES OF THIS PLAN SHEET.

NOTE:

FOR ACCURATE RIGHT OF WAY DATA, CONTACT RIGHT OF WAY ENGINEERING AT THE DISTRICT OFFICE.

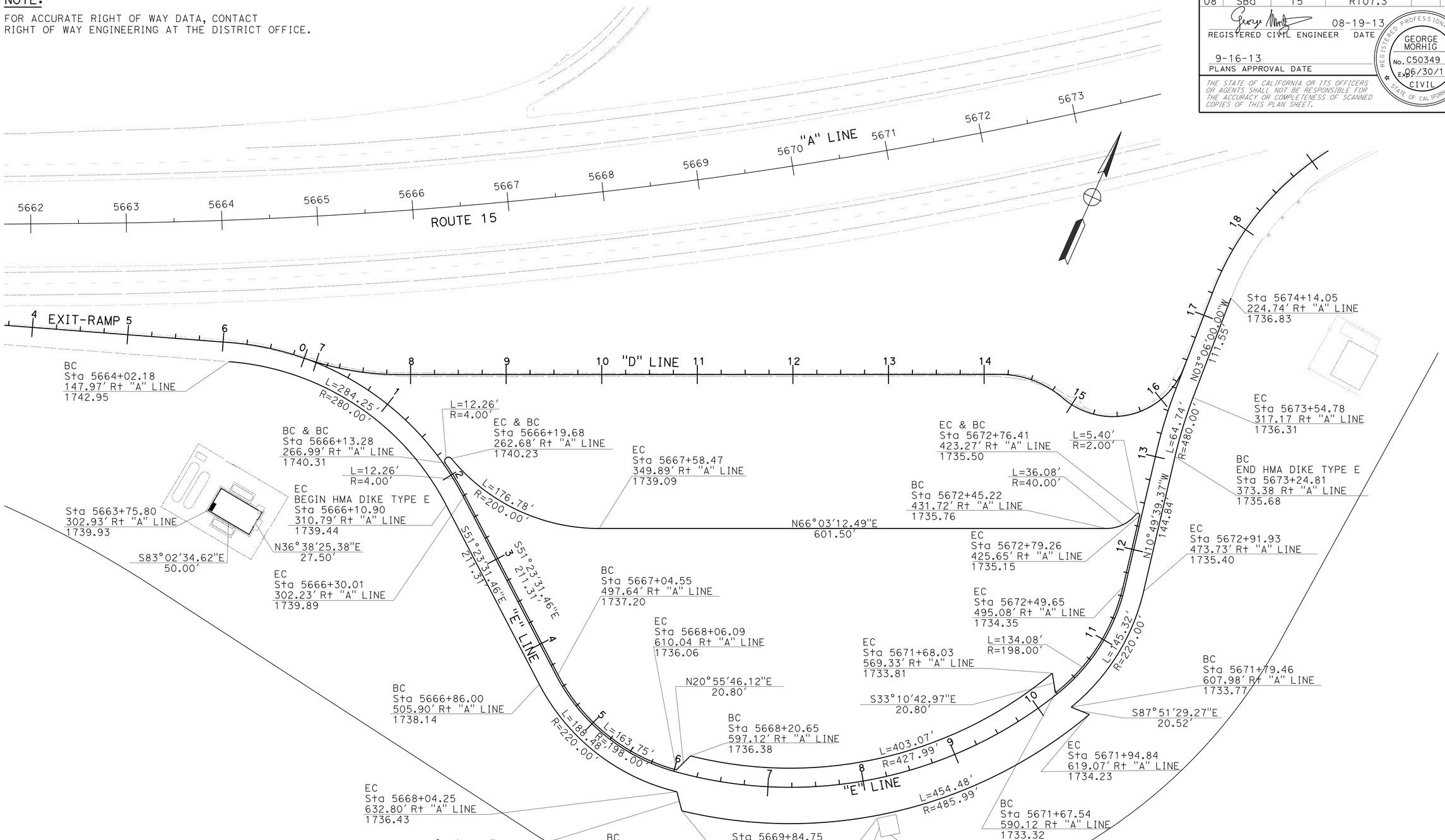

CONSTRUCTION DETAILS
NORTHBOUND
SCALE: 1" = 50'

C-1

STATE OF CALIFORNIA - DEPARTMENT OF TRANSPORTATION

Caltrans

FUNCTIONAL SUPERVISOR: GEORGE MORGHIG

CALCULATED-DESIGNED BY: GEORGE MORGHIG

CHECKED BY

REVISED BY

DATE REVISED

LAST REVISION

DATE PLOTTED => 18-SEP-2013
TIME PLOTTED => 10:33

Dist	COUNTY	ROUTE	POST MILES TOTAL PROJECT	SHEET No.	TOTAL SHEETS
03, 08	Sac, SBd	5, 15	23.3, R107.3	9	330

REGISTERED CIVIL ENGINEER DATE 08-19-13

9-16-13
PLANS APPROVAL DATE

REGISTERED PROFESSIONAL ENGINEER GEORGE MORHIG No. C50349 Exp. 06/30/15 CIVIL STATE OF CALIFORNIA

THE STATE OF CALIFORNIA OR ITS OFFICERS OR AGENTS SHALL NOT BE RESPONSIBLE FOR THE ACCURACY OR COMPLETENESS OF SCANNED COPIES OF THIS PLAN SHEET.

NOTES:

1. FOR ACCURATE RIGHT OF WAY DATA, CONTACT RIGHT OF WAY ENGINEERING AT THE DISTRICT OFFICE.
2. FOR POINTS, DETAILS SEE SHEET C-3.

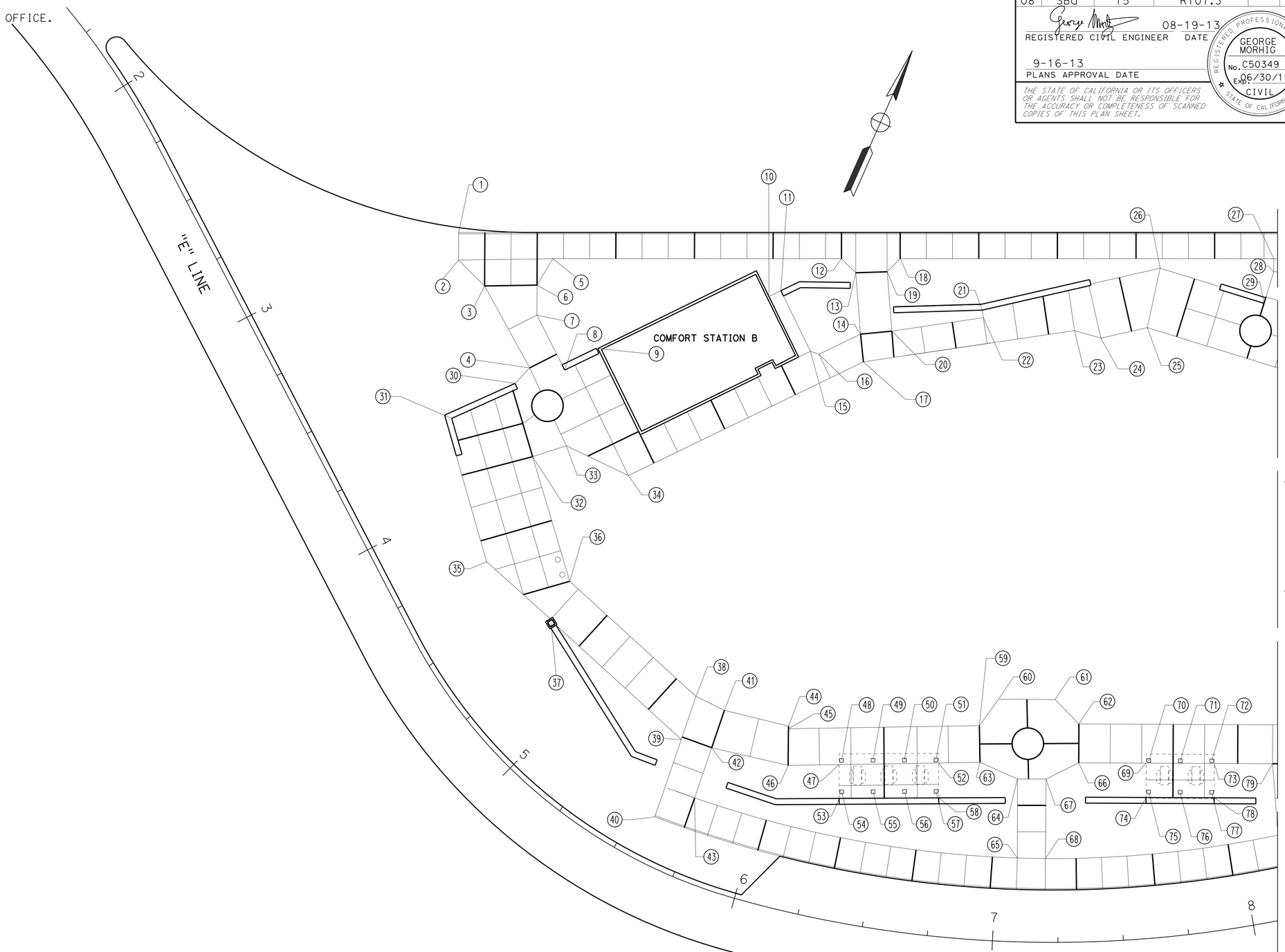

CONSTRUCTION DETAILS
NORTHBOUND
SCALE: 1" = 20'

C-2

STATE OF CALIFORNIA - DEPARTMENT OF TRANSPORTATION
Caltrans DESIGN

FUNCTIONAL SUPERVISOR: GEORGE MORGHIG
CALCULATED-DESIGNED BY: GEORGE MORGHIG
CHECKED BY:
REVISED BY
DATE REVISED

LAST REVISION 08-19-13 | DATE PLOTTED => 18-SEP-2013 | TIME PLOTTED => 10:36

Dist	COUNTY	ROUTE	POST MILES TOTAL PROJECT	SHEET No.	TOTAL SHEETS
03, 08	Sac, SBd	5, 15	23.3, R107.3	10	330

REGISTERED CIVIL ENGINEER 08-19-13 DATE

9-16-13
PLANS APPROVAL DATE

REGISTERED PROFESSIONAL ENGINEER GEORGE MORHIG No. C50349 Exp. 06/30/15 CIVIL STATE OF CALIFORNIA

THE STATE OF CALIFORNIA OR ITS OFFICERS OR AGENTS SHALL NOT BE RESPONSIBLE FOR THE ACCURACY OR COMPLETENESS OF SCANNED COPIES OF THIS PLAN SHEET.

POINT#	STATION	F+ R+ OF LINE "A"	ELEVATION
1	5667+33.17	347.06	1739.72
2	5667+32.12	357.56	1739.51
3	5667+40.42	368.37	1739.35
4	5667+53.29	401.27	1739.10
5	5667+65.61	360.77	1739.32
6	5667+58.99	370.16	1739.23
7	5667+57.80	381.53	1739.18
8	5667+65.50	403.51	1739.20
9	5667+78.02	396.71	1739.46
10	5668+40.32	384.60	1739.46
11	5668+44.79	382.96	1739.36
12	5668+67.56	373.35	1738.52
13	5668+71.94	379.78	1738.42
14	5668+70.83	403.24	1738.29
15	5668+52.50	407.32	1739.36
16	5668+55.37	408.83	1739.30
17	5668+70.57	413.87	1738.26
18	5668+88.23	376.65	1738.40
19	5668+83.09	380.30	1738.36
20	5668+81.94	403.66	1738.20
21	5669+14.60	400.82	1738.77
22	5669+14.62	403.21	1738.75
23	5669+45.88	412.99	1738.32
24	5669+54.68	417.30	1738.20
25	5669+71.40	415.91	1738.37
26	5669+79.02	394.21	1738.63
27	5670+19.26	397.28	1737.41
28	5670+18.53	402.22	1737.39
29	5670+13.39	413.52	1737.29
30	5667+47.57	406.56	1739.00
31	5667+24.09	417.38	1739.16
32	5667+51.03	435.07	1738.77
33	5667+63.20	432.31	1739.00
34	5667+83.75	446.17	1739.22
35	5667+31.21	473.14	1738.35
36	5667+59.33	483.86	1738.20
37	5667+51.29	498.78	1738.10
38	5667+98.41	532.81	1737.55
39	5667+91.70	548.51	1737.44
40	5667+79.65	576.63	1737.20

POINT#	STATION	F+ R+ OF LINE "A"	ELEVATION
41	5668+07.62	539.36	1737.47
42	5668+01.78	552.98	1737.38
43	5667+93.99	571.25	1736.43
44	5668+28.89	548.23	1737.35
45	5668+28.78	549.22	1737.34
46	5668+27.14	563.11	1737.23
47	5668+44.50	565.16	1737.12
48	5668+45.56	563.70	1737.12
49	5668+56.28	565.13	1737.01
50	5668+66.99	566.58	1736.90
51	5668+77.70	568.06	1736.78
52	5668+78.46	569.36	1736.76
53	5668+43.13	577.97	1737.12
54	5668+44.29	575.62	1737.03
55	5668+54.98	577.04	1736.92
56	5668+65.68	578.49	1736.80
57	5668+76.36	579.97	1736.69
58	5668+76.98	582.56	1736.66
59	5668+94.06	557.28	1736.72
60	5669+01.82	548.27	1736.74
61	5669+21.10	551.32	1736.53
62	5669+28.02	561.81	1736.35
63	5668+92.59	571.18	1736.61
64	5669+04.56	579.37	1736.42
65	5669+00.94	608.80	1736.16
66	5669+26.09	576.50	1736.22
67	5669+14.24	580.90	1736.31
68	5669+10.33	610.91	1736.04
69	5669+48.95	580.26	1735.95
70	5669+49.97	579.43	1735.95
71	5669+60.61	581.23	1735.81
72	5669+71.25	583.05	1735.68
73	5669+72.00	584.18	1735.66
74	5669+47.21	593.22	1735.83
75	5669+48.37	591.30	1735.84
76	5669+58.99	593.09	1735.70
77	5669+69.61	594.91	1735.52
78	5669+70.21	597.13	1735.57
79	5669+91.66	587.61	1735.38

CONSTRUCTION DETAILS

C-3

REVISED BY | DATE REVISED
GEORGE MORGHIG | GEORGE MORGHIG
CALCULATED-DESIGNED BY | CHECKED BY
FUNCTIONAL SUPERVISOR
GEORGE MORGHIG
STATE OF CALIFORNIA - DEPARTMENT OF TRANSPORTATION
Caltrans
DESIGN

LAST REVISION 08-19-13 | DATE PLOTTED => 19-SEP-2013 TIME PLOTTED => 05:47

Dist	COUNTY	ROUTE	POST MILES TOTAL PROJECT	SHEET No.	TOTAL SHEETS
03, 08	Sac, SBd	5, 15	23.3, R107.3	11	330

REGISTERED CIVIL ENGINEER 08-19-13 DATE

9-16-13
PLANS APPROVAL DATE

REGISTERED PROFESSIONAL ENGINEER GEORGE MORHIG No. C50349 Exp. 06/30/15 CIVIL STATE OF CALIFORNIA

THE STATE OF CALIFORNIA OR ITS OFFICERS OR AGENTS SHALL NOT BE RESPONSIBLE FOR THE ACCURACY OR COMPLETENESS OF SCANNED COPIES OF THIS PLAN SHEET.

NOTE:

FOR ACCURATE RIGHT OF WAY DATA, CONTACT
RIGHT OF WAY ENGINEERING AT THE DISTRICT OFFICE.

POINT#	STATION	F† R† OF LINE "A"	ELEVATION
80	5670+29.94	399.13	1737.39
81	5670+29.20	404.07	1737.31
82	5670+20.57	423.09	1737.14
83	5671+93.50	420.49	1736.34
84	5671+91.69	430.30	1736.15
85	5671+52.44	440.13	1736.88
86	5670+18.03	440.52	1736.91
87	5670+66.89	487.07	1735.85
88	5670+85.28	481.07	1736.00
89	5670+37.16	507.42	1735.70
90	5670+59.83	499.85	1735.75
91	5670+79.22	529.48	1736.21
92	5670+96.76	523.07	1736.21
93	5671+81.52	495.15	1736.21
94	5671+84.76	512.93	1736.09
95	5671+86.41	519.35	1736.04
96	5671+88.35	521.65	1736.00
97	5671+63.17	526.66	1736.10
98	5671+79.88	523.99	1736.00
99	5671+74.78	522.99	1736.07
100	5671+69.21	529.03	1736.06
101	5671+49.13	535.44	1736.10
102	5671+74.70	551.19	1735.55
103	5671+53.95	553.82	1736.00
104	5671+92.05	573.13	1734.06
105	5670+73.98	550.96	1736.10
106	5670+10.68	575.98	1735.29
107	5670+34.71	580.16	1735.39
108	5670+34.56	576.73	1735.41
109	5670+44.71	572.70	1735.54
110	5670+46.54	575.46	1735.50
111	5670+65.09	568.18	1735.80
112	5670+72.99	572.64	1735.80
113	5670+02.31	589.51	1735.23
114	5670+08.61	590.63	1735.00
115	5670+38.08	590.71	1735.83
116	5670+38.18	588.03	1735.24
117	5670+48.31	584.01	1735.37
118	5670+49.90	586.02	1735.39
119	5670+80.01	584.06	1735.80
120	5670+83.80	569.26	1734.07
121	5670+91.54	574.37	1736.00
122	5670+88.49	580.79	1735.75
123	5670+92.34	593.25	1733.99
124	5670+00.60	614.02	1734.95
125	5669+89.66	614.86	1735.08

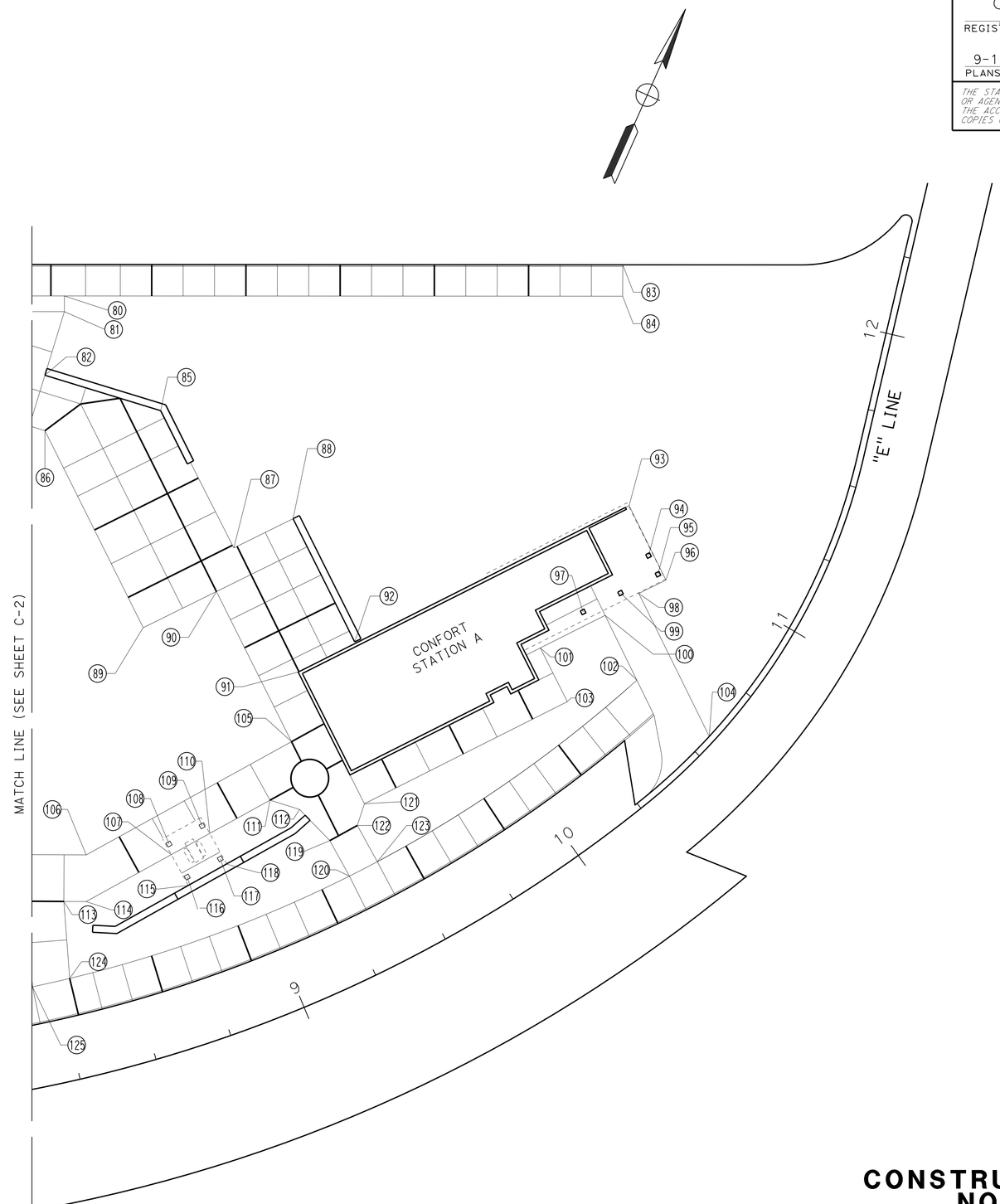

CONSTRUCTION DETAILS NORTHBOUND

NO SCALE

C-4

STATE OF CALIFORNIA - DEPARTMENT OF TRANSPORTATION
Caltrans
DESIGN

FUNCTIONAL SUPERVISOR: GEORGE MORGHIG
CALCULATED-DESIGNED BY: GEORGE MORGHIG
CHECKED BY:
REVISED BY:
DATE REVISED:

LAST REVISION 08-19-13 | DATE PLOTTED => 18-SEP-2013 | TIME PLOTTED => 10:36

Dist	COUNTY	ROUTE	POST MILES TOTAL PROJECT	SHEET No.	TOTAL SHEETS
03, 08	Sac, SBd	5, 15	23.3, R107.3	12	330

REGISTERED CIVIL ENGINEER 08-19-13 DATE

9-16-13
PLANS APPROVAL DATE

REGISTERED PROFESSIONAL ENGINEER GEORGE MORHIG No. C50349 Exp. 06/30/15 CIVIL STATE OF CALIFORNIA

THE STATE OF CALIFORNIA OR ITS OFFICERS OR AGENTS SHALL NOT BE RESPONSIBLE FOR THE ACCURACY OR COMPLETENESS OF SCANNED COPIES OF THIS PLAN SHEET.

NOTE:

FOR ACCURATE RIGHT OF WAY DATA, CONTACT RIGHT OF WAY ENGINEERING AT THE DISTRICT OFFICE.

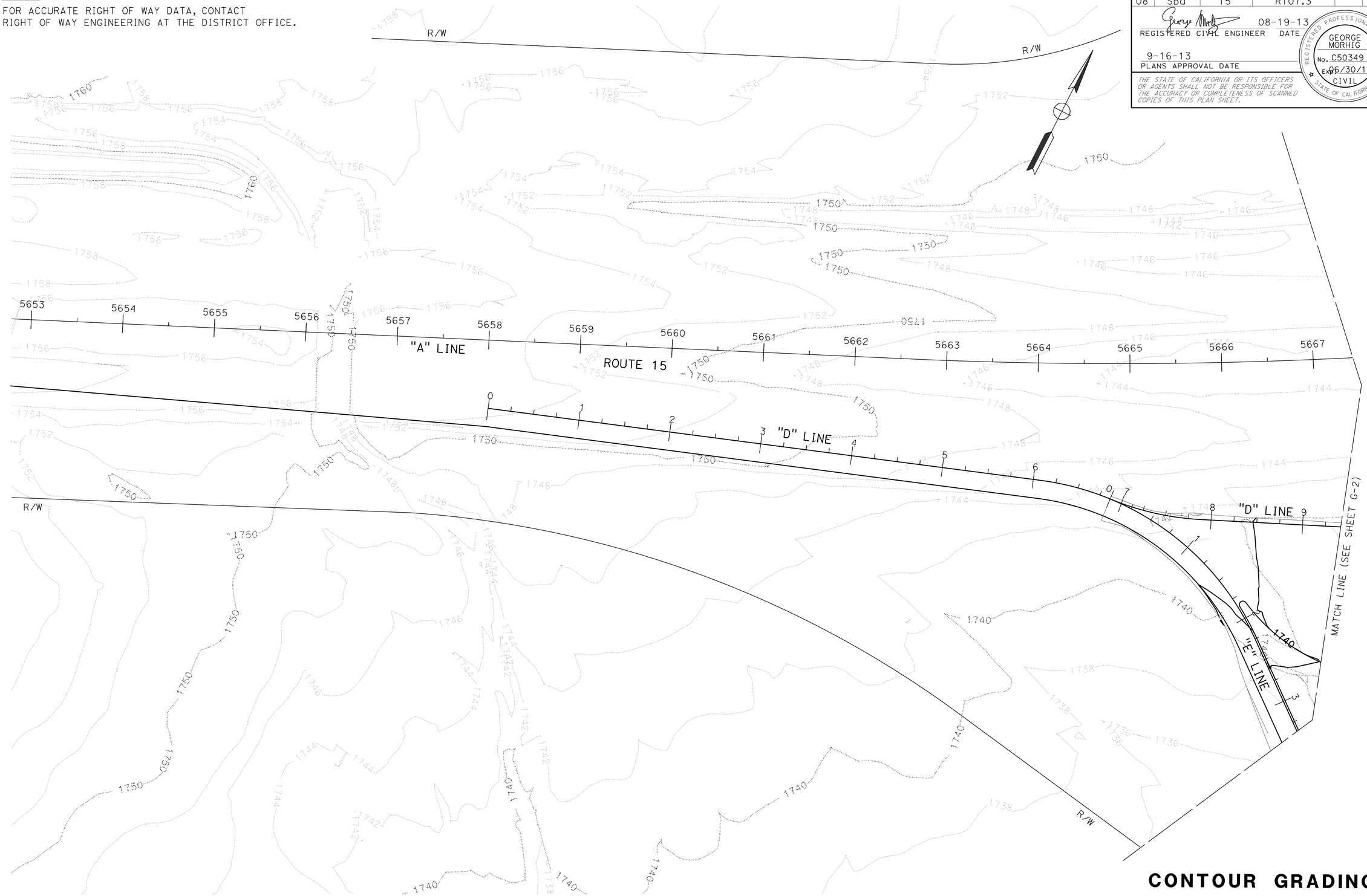

CONTOUR GRADING

APPROVED FOR CONTOUR GRADING WORK ONLY

G-1

STATE OF CALIFORNIA - DEPARTMENT OF TRANSPORTATION

Caltrans

FUNCTIONAL SUPERVISOR: GEORGE MORGHIG

CALCULATED-DESIGNED BY: GEORGE MORGHIG

CHECKED BY

REVISED BY

DATE REVISED

LAST REVISION 08-19-13

DATE PLOTTED => 18-SEP-2013
TIME PLOTTED => 10:36

Dist	COUNTY	ROUTE	POST MILES TOTAL PROJECT	SHEET No.	TOTAL SHEETS
03, 08	Sac, SBd	5, 15	23.3, R107.3	13	330

REGISTERED CIVIL ENGINEER 08-19-13 DATE

9-16-13
PLANS APPROVAL DATE

REGISTERED PROFESSIONAL ENGINEER GEORGE MORHIG No. C50349 Exp. 06/30/15 CIVIL STATE OF CALIFORNIA

THE STATE OF CALIFORNIA OR ITS OFFICERS OR AGENTS SHALL NOT BE RESPONSIBLE FOR THE ACCURACY OR COMPLETENESS OF SCANNED COPIES OF THIS PLAN SHEET.

NOTE:

FOR ACCURATE RIGHT OF WAY DATA, CONTACT RIGHT OF WAY ENGINEERING AT THE DISTRICT OFFICE.

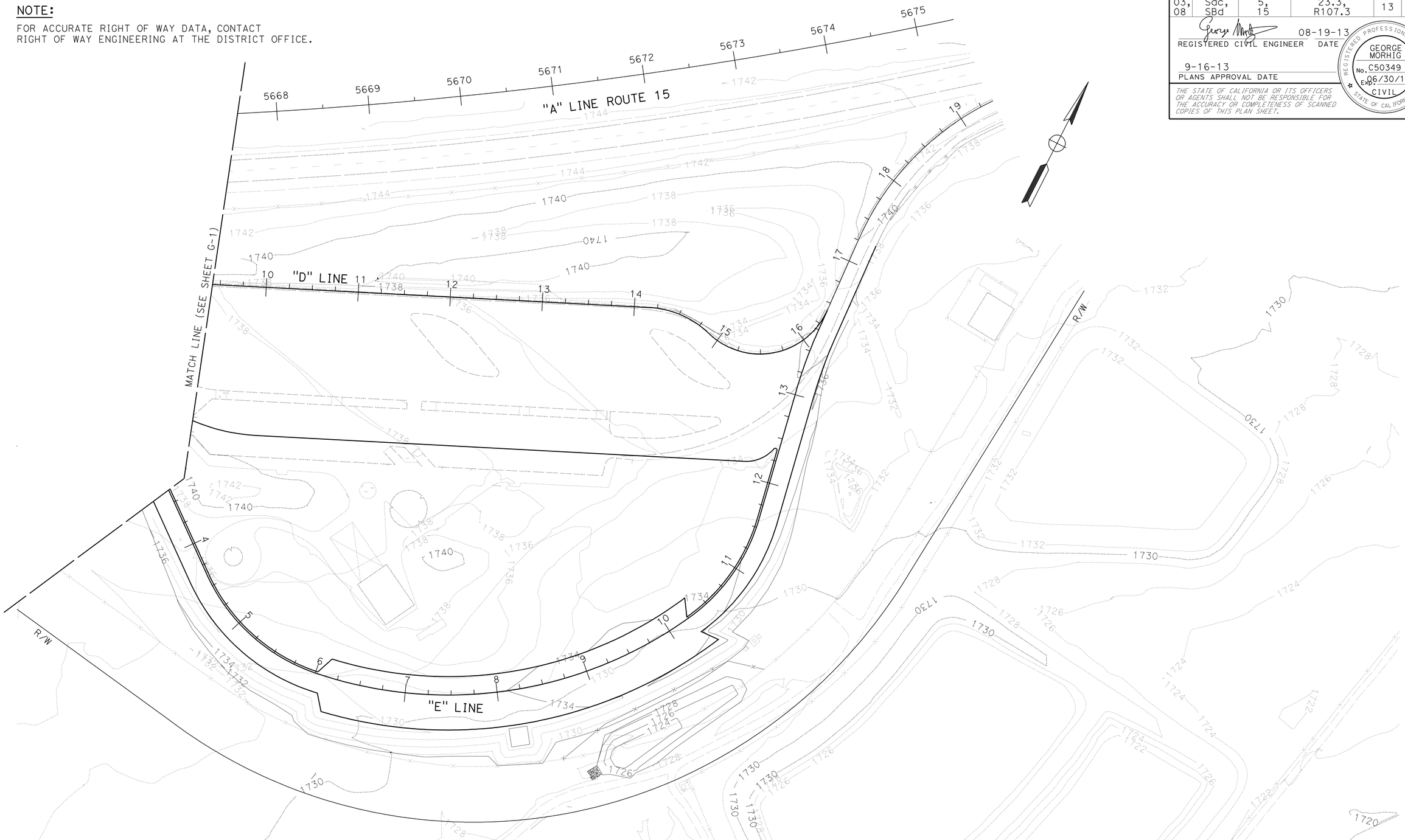

CONTOUR GRADING

SCALE: 1" = 50'

G-2

APPROVED FOR CONTOUR GRADING WORK ONLY

STATE OF CALIFORNIA - DEPARTMENT OF TRANSPORTATION

Caltrans

DESIGN

FUNCTIONAL SUPERVISOR: GEORGE MORGHIG

CALCULATED-DESIGNED BY: GEORGE MORGHIG

CHECKED BY

REVISED BY

DATE REVISED

LAST REVISION 08-19-13 | DATE PLOTTED => 18-SEP-2013 | TIME PLOTTED => 10:41

Dist	COUNTY	ROUTE	POST MILES TOTAL PROJECT	SHEET No.	TOTAL SHEETS
03, 08	Sac, SBd	5, 15	23.3, R107.3	14	330

REGISTERED CIVIL ENGINEER 08-19-13 DATE

9-16-13
PLANS APPROVAL DATE

REGISTERED PROFESSIONAL ENGINEER GEORGE MORHIG No. C50349 Exp. 06/30/15 CIVIL STATE OF CALIFORNIA

THE STATE OF CALIFORNIA OR ITS OFFICERS OR AGENTS SHALL NOT BE RESPONSIBLE FOR THE ACCURACY OR COMPLETENESS OF SCANNED COPIES OF THIS PLAN SHEET.

NOTE:

FOR ACCURATE RIGHT OF WAY DATA, CONTACT RIGHT OF WAY ENGINEERING AT THE DISTRICT OFFICE.

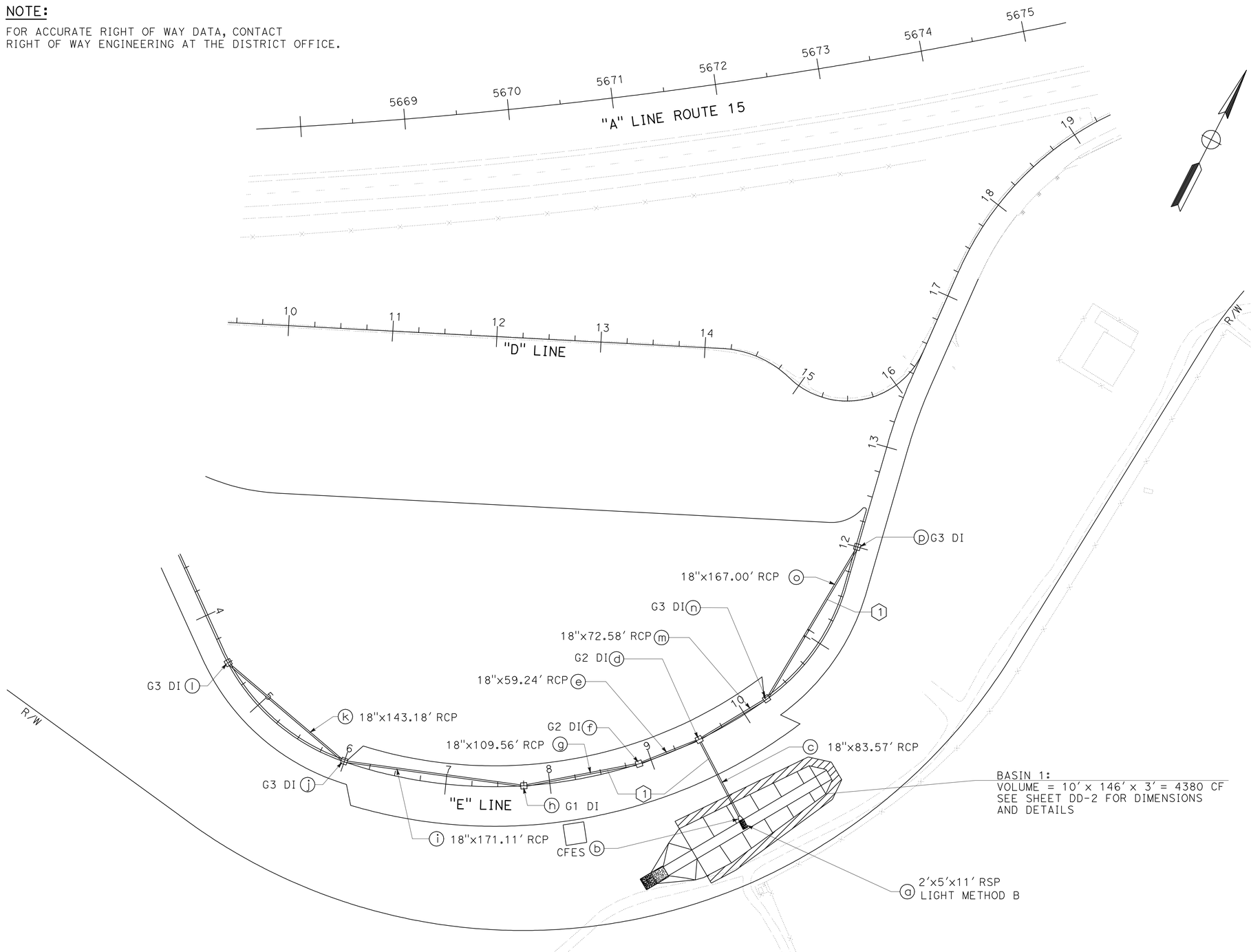

DRAINAGE PLAN

SCALE: 1" = 50'

D-1

APPROVED FOR DRAINAGE WORK ONLY

STATE OF CALIFORNIA - DEPARTMENT OF TRANSPORTATION
Caltrans
DESIGN

FUNCTIONAL SUPERVISOR: GEORGE MORHIG
CALCULATED-DESIGNED BY: GEORGE MORHIG
CHECKED BY:
REVISED BY:
DATE REVISED:

LAST REVISION 08-19-13
DATE PLOTTED => 18-SEP-2013
TIME PLOTTED => 10:41

Dist	COUNTY	ROUTE	POST MILES TOTAL PROJECT	SHEET No.	TOTAL SHEETS
03, 08	Sac, SBd	5, 15	23.3, R107.3	15	330

REGISTERED CIVIL ENGINEER 08-19-13 DATE

9-16-13
PLANS APPROVAL DATE

REGISTERED PROFESSIONAL ENGINEER GEORGE MORHIG No. C50349 Exp. 06/30/15 CIVIL STATE OF CALIFORNIA

THE STATE OF CALIFORNIA OR ITS OFFICERS OR AGENTS SHALL NOT BE RESPONSIBLE FOR THE ACCURACY OR COMPLETENESS OF SCANNED COPIES OF THIS PLAN SHEET.

NOTE:

1. SEE DRAINAGE QUANTITIES SHEETS FOR INFORMATION.

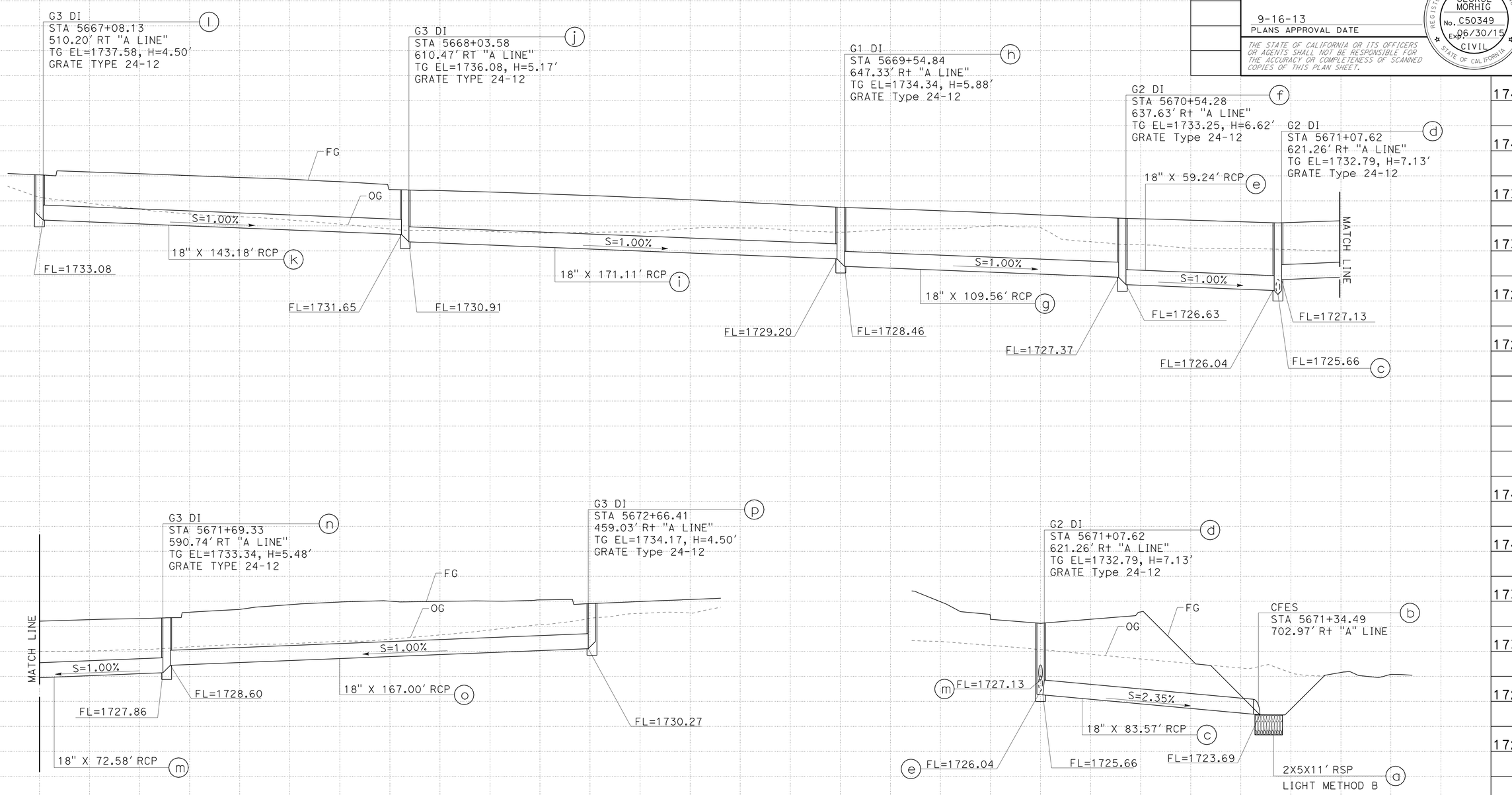

DRAINAGE SYSTEM No. 1

DRAINAGE PROFILE

SCALE: Horiz 1" = 20'
Vert 1" = 5'

DP-1

STATION		TOTAL
CY	Exc	
	Emb	

STATE OF CALIFORNIA - DEPARTMENT OF TRANSPORTATION
Caltrans® DESIGN
FUNCTIONAL SUPERVISOR: GEORGE MORGHIG
CALCULATED-DESIGNED BY: GEORGE MORGHIG
CHECKED BY
REVISED BY
DATE REVISED

LAST REVISION 08-19-13
DATE PLOTTED => 18-SEP-2013
TIME PLOTTED => 10:41

Dist	COUNTY	ROUTE	POST MILES TOTAL PROJECT	SHEET No.	TOTAL SHEETS
03, 08	Sac, SBd	5, 15	23.3, R107.3	16	330

REGISTERED CIVIL ENGINEER 08-19-13 DATE

9-16-13
PLANS APPROVAL DATE

REGISTERED PROFESSIONAL ENGINEER GEORGE MORHIG No. C50349 Exp. 06/30/15 CIVIL STATE OF CALIFORNIA

THE STATE OF CALIFORNIA OR ITS OFFICERS OR AGENTS SHALL NOT BE RESPONSIBLE FOR THE ACCURACY OR COMPLETENESS OF SCANNED COPIES OF THIS PLAN SHEET.

NOTE:

FOR CONCRETE FLARE END SECTION (CFES), SEE 2006 Std PLAN D94B.

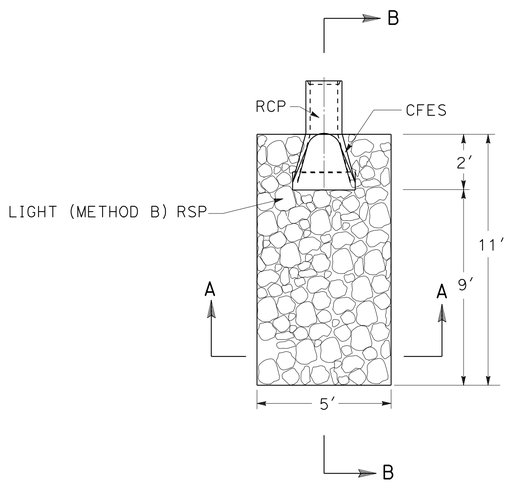

PLAN

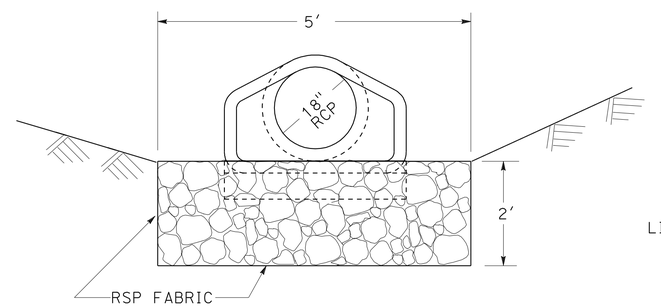

SECTION A-A

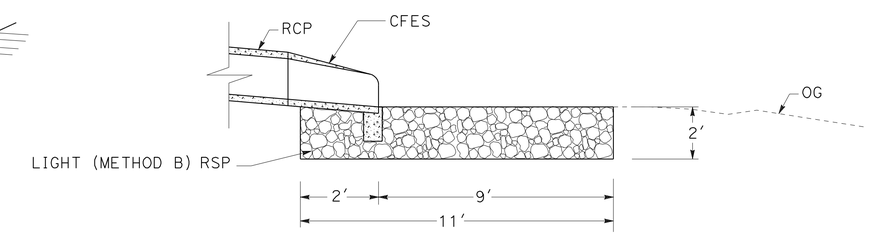

SECTION B-B

ROCK SLOPE PROTECTION (RSP) AT PIPE CULVERTS

DRAINAGE DETAILS

NO SCALE

DD-1

STATE OF CALIFORNIA - DEPARTMENT OF TRANSPORTATION
Caltrans DESIGN

FUNCTIONAL SUPERVISOR: GEORGE MORGHIG
CALCULATED-DESIGNED BY: GEORGE MORGHIG
CHECKED BY
REVISED BY
DATE REVISED

LAST REVISION 08-19-13 | DATE PLOTTED => 18-SEP-2013 | TIME PLOTTED => 10:41

Dist	COUNTY	ROUTE	POST MILES TOTAL PROJECT	SHEET No.	TOTAL SHEETS
03, 08	Sac, SBd	5, 15	23.3, R107.3	17	330

REGISTERED CIVIL ENGINEER 08-19-13 DATE

9-16-13
PLANS APPROVAL DATE

REGISTERED PROFESSIONAL ENGINEER GEORGE MORHIG No. C50349 Exp. 06/30/15 CIVIL STATE OF CALIFORNIA

THE STATE OF CALIFORNIA OR ITS OFFICERS OR AGENTS SHALL NOT BE RESPONSIBLE FOR THE ACCURACY OR COMPLETENESS OF SCANNED COPIES OF THIS PLAN SHEET.

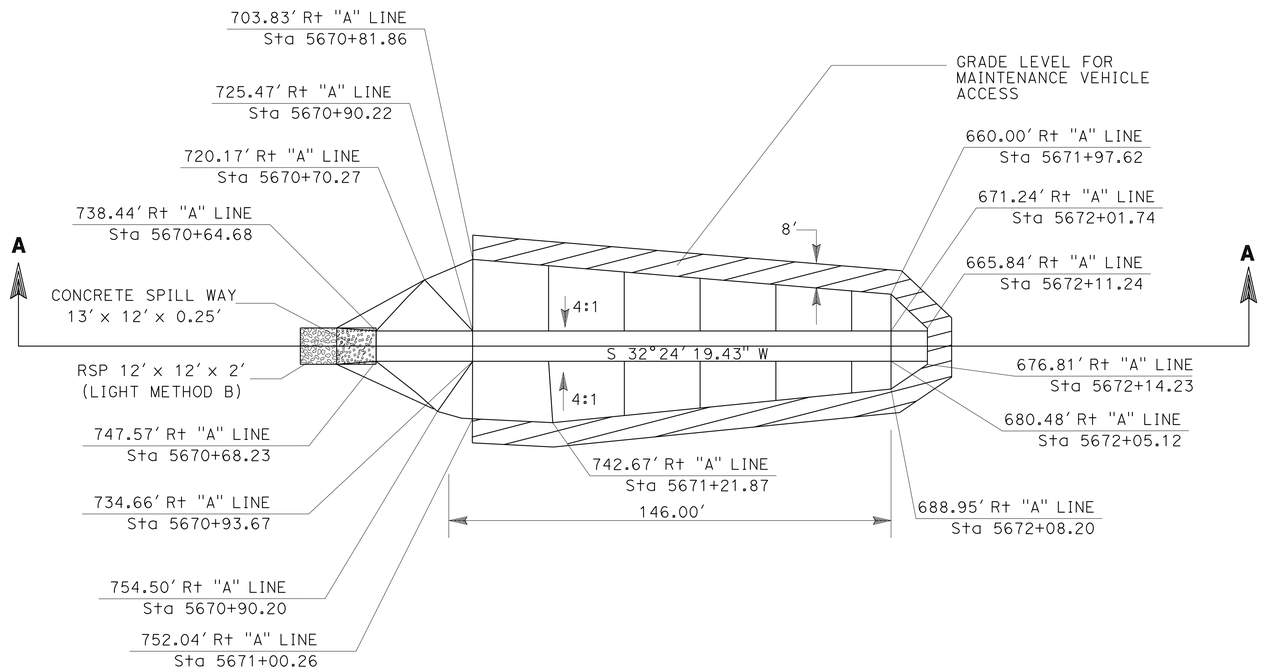

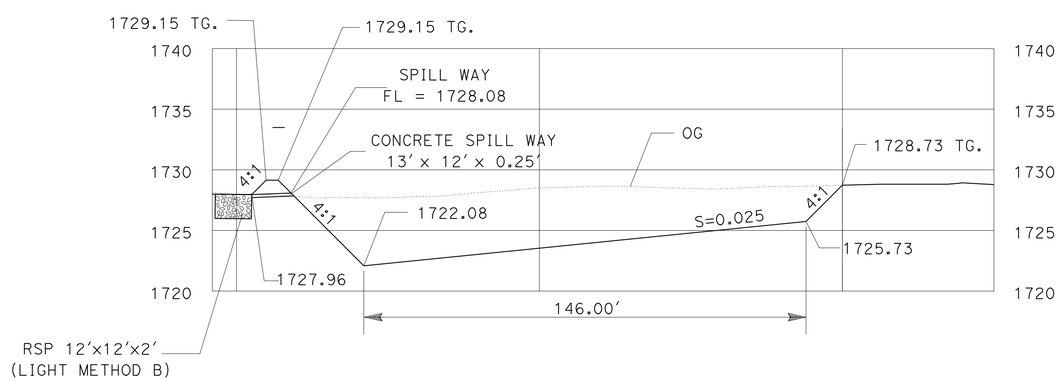

SECTION A-A

BASIN 1: VOLUME = 10' x 146' x 3' = 4380 CF

DRAINAGE DETAILS

NO SCALE

DD-2

STATE OF CALIFORNIA - DEPARTMENT OF TRANSPORTATION
Caltrans
DESIGN
FUNCTIONAL SUPERVISOR: GEORGE MORGHIG
CALCULATED-DESIGNED BY: GEORGE MORGHIG
CHECKED BY
REVISED BY
DATE REVISED

LAST REVISION 08-19-13
DATE PLOTTED => 18-SEP-2013
TIME PLOTTED => 10:41

Dist	COUNTY	ROUTE	POST MILES TOTAL PROJECT	SHEET No.	TOTAL SHEETS
03, 08	Sac, SBd	5, 15	23.3, R107.3	18	330

REGISTERED CIVIL ENGINEER 08-19-13 DATE

9-16-13
PLANS APPROVAL DATE

REGISTERED PROFESSIONAL ENGINEER GEORGE MORHIG No. C50349 Exp. 06/30/15 CIVIL STATE OF CALIFORNIA

THE STATE OF CALIFORNIA OR ITS OFFICERS OR AGENTS SHALL NOT BE RESPONSIBLE FOR THE ACCURACY OR COMPLETENESS OF SCANNED COPIES OF THIS PLAN SHEET.

NOTE:

THE PRECISE DETERMINATION OF THE FOLLOWING ITEMS WILL BE MADE BY THE ENGINEER IN THE FIELD: STATION, SKEW, LENGTH, FL ELEVATION, AND DEPTH OF STRUCTURE.

LEGEND AND ABBREVIATIONS:

S - STANDARD JOINT TYPE
RCP - REINFORCED CONCRETE PIPE
w/ - WITH
Ω - SEE DRAINAGE DETAIL

DRAINAGE PLAN SHEET No.	DRAINAGE SYSTEM No. ⬡	DRAINAGE UNIT ○	MINOR CONCRETE (MINOR STRUCTURE) CY	Misc IRON AND STEEL LB	RSP ROCK SLOPE PROTECTION (LIGHT, METHOD B) CY	RSP ROCK SLOPE PROTECTION FABRIC SQYD	24-12 GRATE TYPE (N) EA	HEIGHT OF INLET "H" (N) FT	RCP 18" RCP LF	PIPE JOINT CLASSIFICATION	CFES 18" CFES EA	DESCRIPTION	STATION	DRAINAGE PLAN SHEET No.	DRAINAGE SYSTEM No. ⬡	DRAINAGE UNIT ○
	1														1	
D-1		a			4.07	13.22						RSP Ω No. DD-1		D-1		a
		b									1	FES				b
		c							83.57	S		18" RCP				c
		d	2.36	326			1	7.13				G2 DI	621.26 R+ "A LINE" 5671+07.62			d
		e							59.24	S		18" RCP				e
		f	2.23	326			1	6.62				G2 DI	637.63 R+ "A LINE" 5670+54.28			f
		g							109.56	S		18" RCP				g
		h	1.58	326			1	5.88				G1 DI	647.33 R+ "A LINE" 5669+54.84			h
		i							171.11	S		18" RCP				i
		j	1.51	326			1	5.17				G3 DI	610.47 R+ "A LINE" 5668+03.58			j
		k							143.18	S		18" RCP				k
		l	1.36	326			1	4.5				G3 DI	510.20 R+ "A LINE" 5667+08.13			l
		m							72.58	S		18" RCP				m
		n	1.58	326			1	5.48				G3 DI	590.74 R+ "A LINE" 5671+69.33			n
		o							167.00	S		18" RCP				o
		p	1.36	326			1	4.5				G3 DI	459.03 R+ "A LINE" 5672+66.41			p
SHEET TOTALS			11.98	2282	4.07	13.22	7		806.24		1	SHEET TOTALS				
GRAND TOTALS			11.98	2282	4.07	13.22	7		806.24		1	GRAND TOTALS				

(N) - NOT A SEPARATE PAY ITEM, FOR INFORMATION ONLY.

DRAINAGE QUANTITIES

DQ-1

APPROVED FOR DRAINAGE WORK ONLY

STATE OF CALIFORNIA - DEPARTMENT OF TRANSPORTATION
Caltrans® DESIGN

FUNCTIONAL SUPERVISOR: GEORGE MORGHIG
CALCULATED-DESIGNED BY: GEORGE MORGHIG
CHECKED BY:
REVISED BY:
DATE REVISED:

LAST REVISION 08-19-13
DATE PLOTTED => 18-SEP-2013
TIME PLOTTED => 10:41

Dist	COUNTY	ROUTE	POST MILES TOTAL PROJECT	SHEET No.	TOTAL SHEETS
03, 08	Sac, SBd	5, 15	23.3, R107.3	19	330

REGISTERED CIVIL ENGINEER 08-19-13 DATE

9-16-13
PLANS APPROVAL DATE

REGISTERED PROFESSIONAL ENGINEER
GEORGE MORHIG
No. C50349
Exp. 06/30/15
CIVIL
STATE OF CALIFORNIA

THE STATE OF CALIFORNIA OR ITS OFFICERS OR AGENTS SHALL NOT BE RESPONSIBLE FOR THE ACCURACY OR COMPLETENESS OF SCANNED COPIES OF THIS PLAN SHEET.

NOTES:

1. THE PURPOSE OF THIS MAP IS TO SHOW THE LOCATION OF THE UNDERGROUND TELEPHONE. TOPOGRAPHIC FEATURES WERE PROVIDED BY OTHERS AND SHOULD BE USED ONLY AS AN AID FOR ORIENTATION.
2. THIS MAP DOES NOT SHOW EXISTING CALTRANS FACILITIES, WHICH MAY INCLUDE STREET LIGHT ELECTRICAL, DRAINAGE, IRRIGATION AND TRAFFIC OPERATION COMMUNICATION FACILITIES.

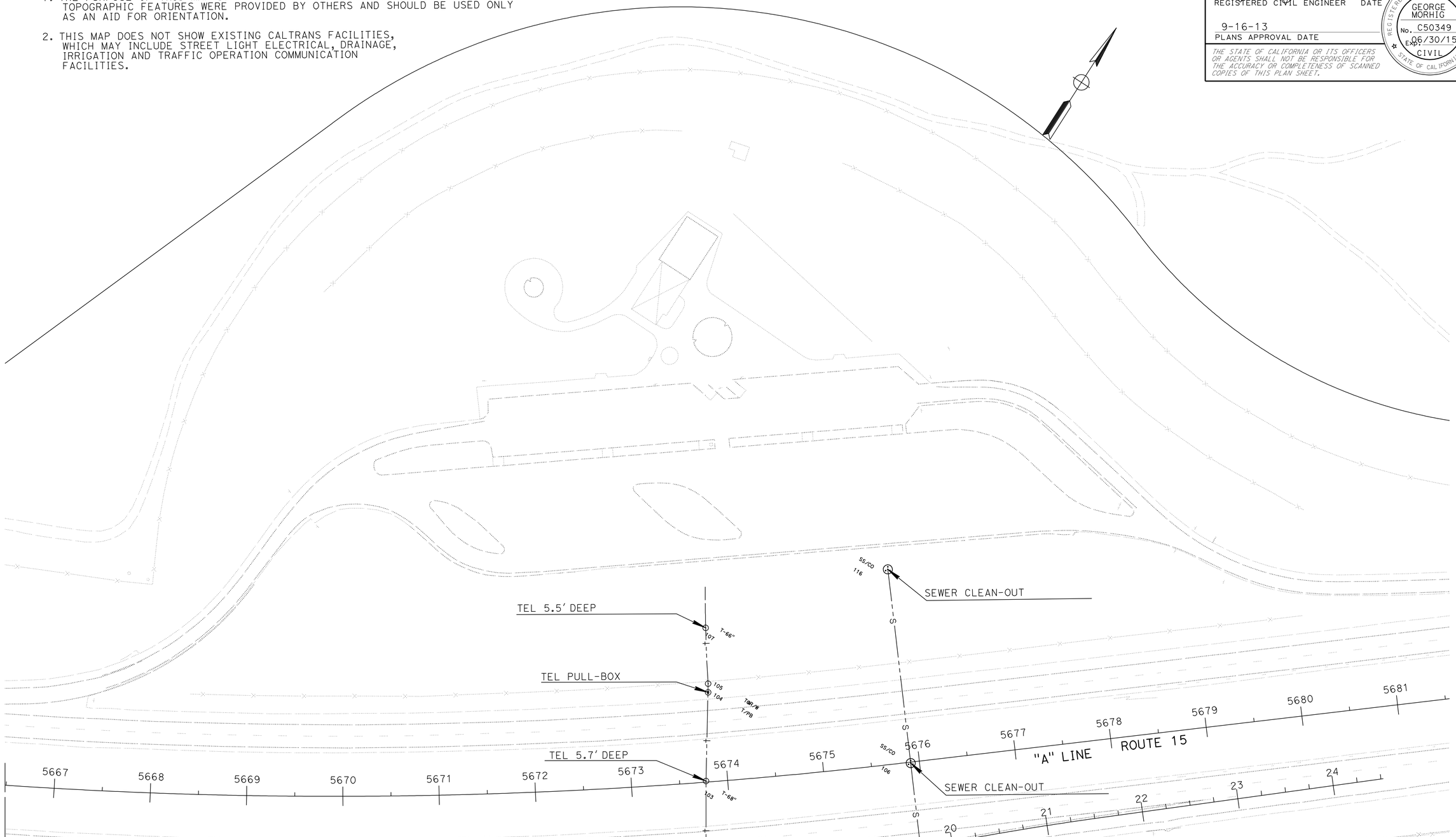

UTILITY PLAN

SCALE: 1" = 50'

U-1

APPROVED FOR UTILITY WORK ONLY

STATE OF CALIFORNIA - DEPARTMENT OF TRANSPORTATION

Caltrans

FUNCTIONAL SUPERVISOR: GEORGE MORGHIG

CALCULATED-DESIGNED BY: GEORGE MORGHIG

CHECKED BY:

REVISED BY

DATE REVISED

LAST REVISION 08-19-13 | DATE PLOTTED => 18-SEP-2013 | TIME PLOTTED => 10:41

Dist	COUNTY	ROUTE	POST MILES TOTAL PROJECT	SHEET No.	TOTAL SHEETS
03, 08	Sac, SBd	5, 15	23.3, R107.3	20	330

REGISTERED CIVIL ENGINEER 9-06-13 DATE

9-16-13
PLANS APPROVAL DATE

REGISTERED PROFESSIONAL ENGINEER GEORGE MORHIG No. C50349 Exp. 06/30/15 CIVIL STATE OF CALIFORNIA

THE STATE OF CALIFORNIA OR ITS OFFICERS OR AGENTS SHALL NOT BE RESPONSIBLE FOR THE ACCURACY OR COMPLETENESS OF SCANNED COPIES OF THIS PLAN SHEET.

NOTES:

1. THE PURPOSE OF THIS MAP IS TO SHOW THE LOCATION OF THE UNDERGROUND TELEPHONE. TOPOGRAPHIC FEATURES WERE PROVIDED BY OTHERS AND SHOULD BE USED ONLY AS AN AID FOR ORIENTATION.
2. THIS MAP DOES NOT SHOW EXISTING CALTRANS FACILITIES, WHICH MAY INCLUDE STREET LIGHT ELECTRICAL, DRAINAGE, IRRIGATION AND TRAFFIC OPERATION COMMUNICATION FACILITIES.

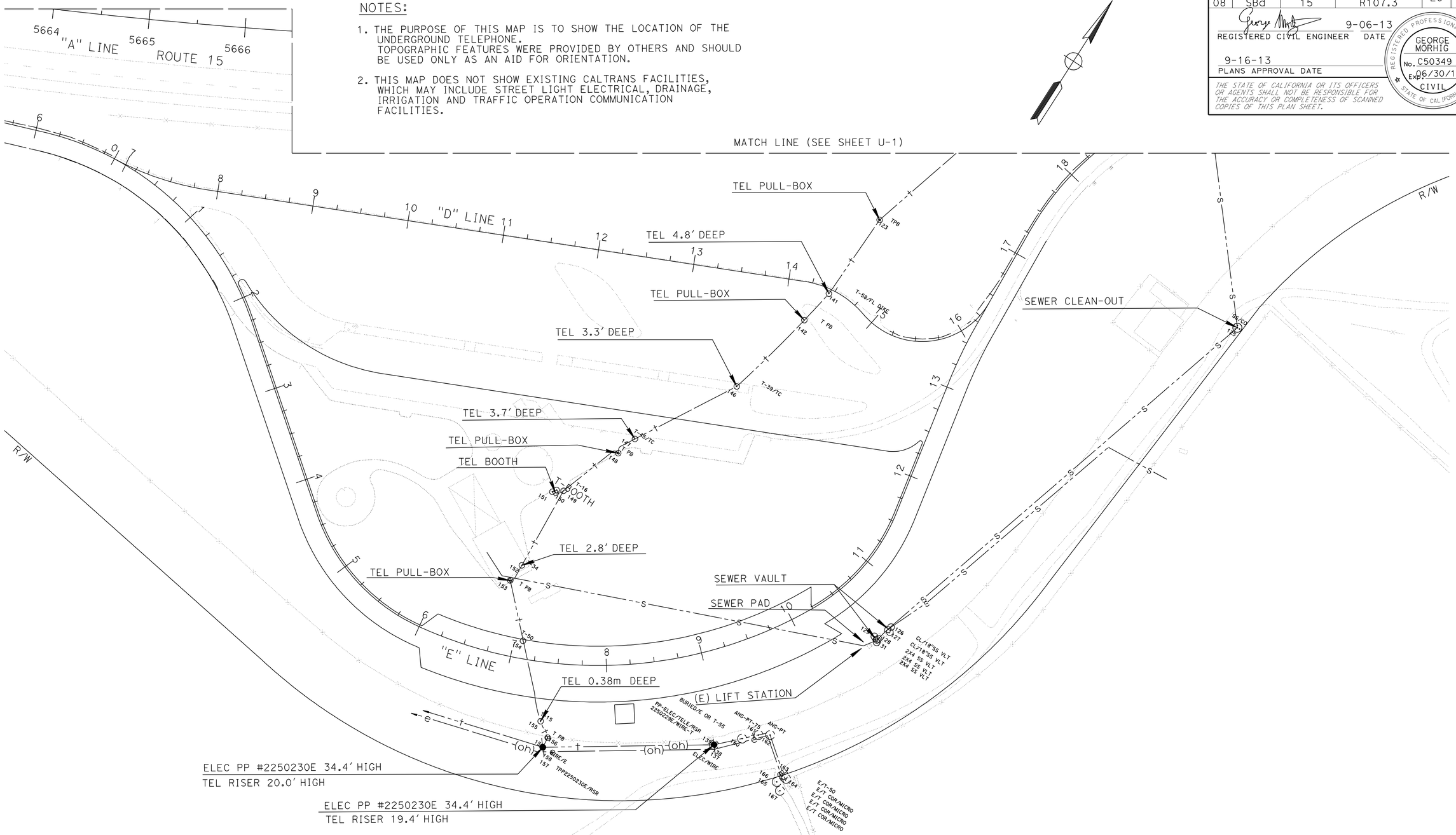

UTILITY PLAN

SCALE: 1" = 50'

U-2

APPROVED FOR UTILITIES WORK ONLY

STATE OF CALIFORNIA - DEPARTMENT OF TRANSPORTATION

Caltrans

DESIGN

FUNCTIONAL SUPERVISOR: GEORGE MORGHIG

CALCULATED-DESIGNED BY: GEORGE MORGHIG

CHECKED BY

REVISED BY

DATE REVISED

LAST REVISION 09-09-13

DATE PLOTTED => 18-SEP-2013

TIME PLOTTED => 10:41

Dist	COUNTY	ROUTE	POST MILES TOTAL PROJECT	SHEET No.	TOTAL SHEETS
03, 08	Sac, SBd	5, 15	23.3, R107.3	21	330

REGISTERED CIVIL ENGINEER 08-19-13 DATE

9-16-13
PLANS APPROVAL DATE

REGISTERED PROFESSIONAL ENGINEER TRAN HOANG No. C54996 Exp. 06/30/14 CIVIL STATE OF CALIFORNIA

THE STATE OF CALIFORNIA OR ITS OFFICERS OR AGENTS SHALL NOT BE RESPONSIBLE FOR THE ACCURACY OR COMPLETENESS OF SCANNED COPIES OF THIS PLAN SHEET.

LEGEND:

- ONE POST SIGN
- TWO POST SIGN
- CHANNELIZER (SURFACE MOUNTED)
- PORTABLE BARRICADE (TYPE III)

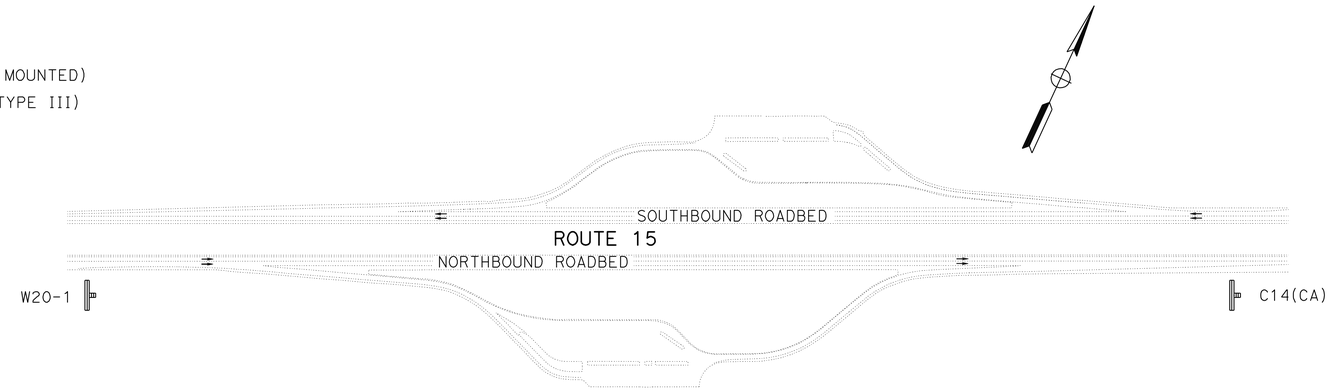

C. V. KANE SAFETY ROADSIDE REST AREA

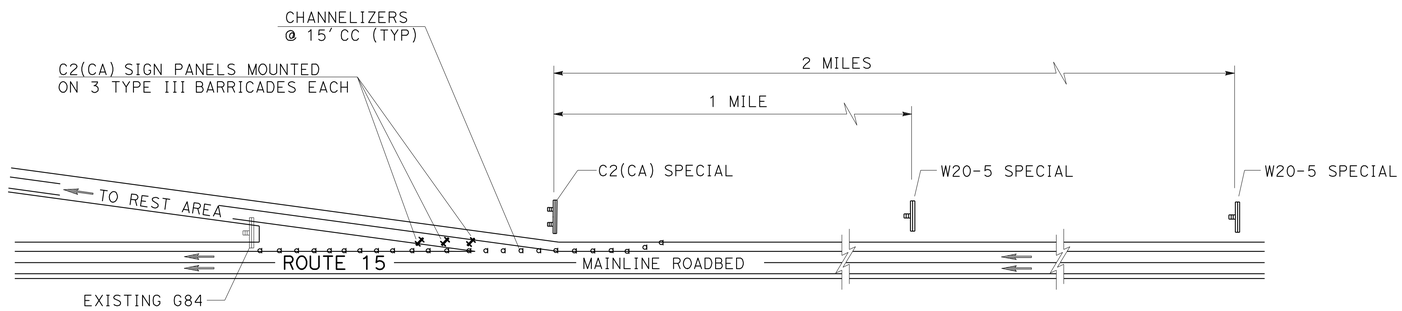

W20-5 SPECIAL
48" x 48" PANEL
BLACK ON ORANGE
6" C LETTERS

C2(CA) SPECIAL
72" x 30" PANEL
BLACK ON WHITE
8" D LETTERS

CONSTRUCTION AREA SIGNS
(TYPICAL FOR NB AND SB LOCATIONS)

TYPE III BARRICADE

QUANTITY
6 EACH

CHANNELIZER (SURFACE MOUNTED)

QUANTITY
70 EACH

CONSTRUCTION AREA SIGNS

SIGN CODE		PANEL SIZE	SIGN MESSAGE	No. OF POST & SIZE	No. OF SIGNS (N)
FEDERAL	CALIFORNIA				
W20-1		48" x 48"	ROAD WORK AHEAD	1 - 6" x 6"	1
	C14(CA)	48" x 24"	END ROAD WORK	1 - 4" x 6"	1
W20-5 SPECIAL		48" x 48"	REST AREA CLOSED AHEAD	1 - 6" x 6"	4
	C2 SPECIAL	72" x 30"	REST AREA CLOSED	2 - 4" x 6"	2
	C2(CA)	36" x 24"	RAMP CLOSED	MOUNT ON BARRICADES	6

(N) NOT A SEPARATE PAY ITEM, FOR INFORMATION ONLY.
SIGN PANELS ARE SINGLE FACED 0.08" ALUMINUM

NOTES:

1. EXACT SIGN LOCATIONS TO BE DETERMINED BY THE ENGINEER.

APPROVED FOR CONSTRUCTION AREA SIGN WORK ONLY

CONSTRUCTION AREA SIGNS
NO SCALE

CS-1

STATE OF CALIFORNIA - DEPARTMENT OF TRANSPORTATION
Caltrans® TRAFFIC DESIGN
FUNCTIONAL SUPERVISOR: WILLIAM E. WASSER
CALCULATED-DESIGNED BY: HORMUZD SETHNA
CHECKED BY: TRAN HOANG
REVISED BY / DATE REVISED

LAST REVISION 08-19-13 | DATE PLOTTED => 18-SEP-2013 | TIME PLOTTED => 10:41

Dist	COUNTY	ROUTE	POST MILES TOTAL PROJECT	SHEET No.	TOTAL SHEETS
03, 08	Sac, SBd	5, 15	23.3, R107.3	22	330

REGISTERED CIVIL ENGINEER — DATE: 08-19-13

9-16-13
PLANS APPROVAL DATE

REGISTERED PROFESSIONAL ENGINEER — TRAN HOANG No. C54996 Exp. 06/30/14 CIVIL — STATE OF CALIFORNIA

THE STATE OF CALIFORNIA OR ITS OFFICERS OR AGENTS SHALL NOT BE RESPONSIBLE FOR THE ACCURACY OR COMPLETENESS OF SCANNED COPIES OF THIS PLAN SHEET.

NOTES:

1. ALL EDGELINES INCLUDING STRIPINGS FOR PARKING STALLS TO BE SPRAYABLE THERMOPLASTIC.
2. ALL PAVEMENT MARKINGS TO BE THERMOPLASTIC.
3. SPACING BETWEEN DELINEATORS IS APPROXIMATELY 50 FEET.
4. SEE ARCHITECTURAL PLANS FOR ACCESSIBLE PARKING PAVEMENT MARKINGS.
5. SEE ARCHITECTURAL PLANS FOR ACCESSIBLE PARKING SIGNS.

LEGEND:

- ROADSIDE SIGN (ONE POST)
- ROADSIDE SIGN (TWO POST)
- (1-1) SIGN NUMBER
- F DELINEATOR (CLASS 2) TYPE F
- G DELINEATOR (CLASS 2) TYPE G
- TYPE V ARROW (THERMOPLASTIC)

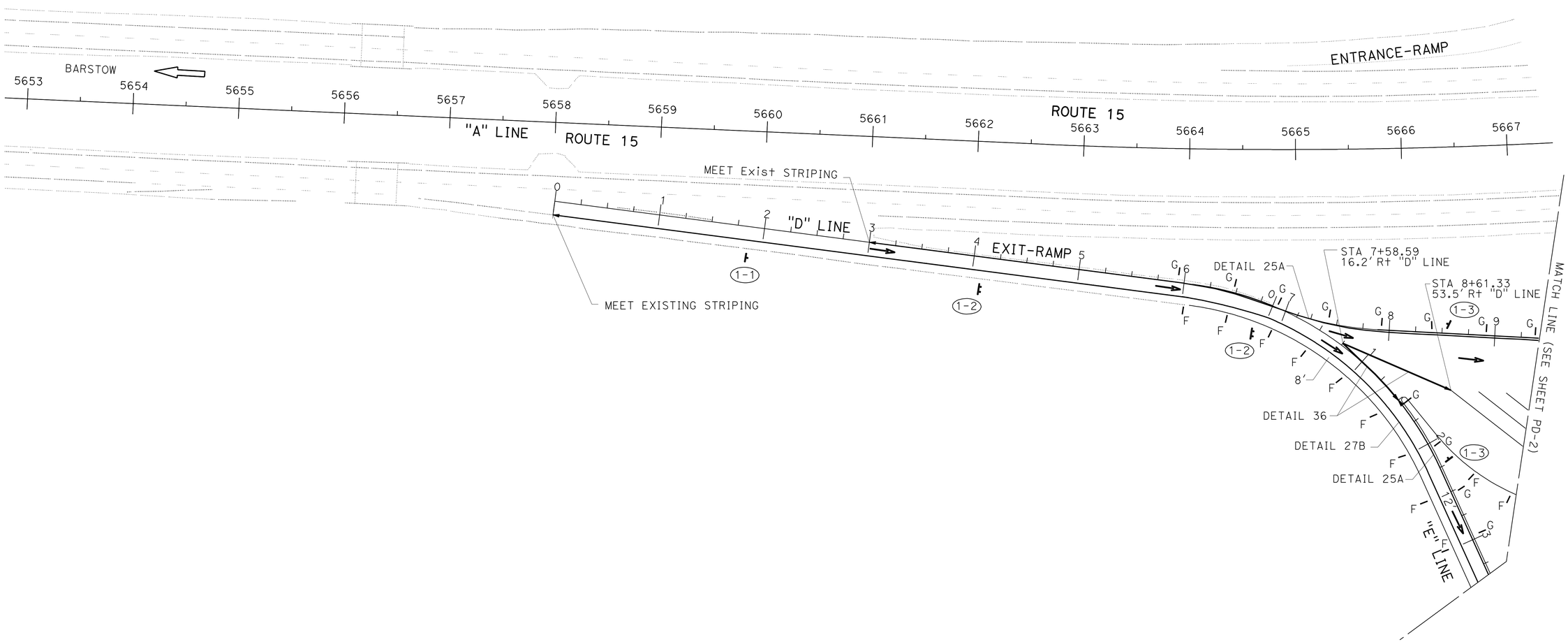

PAVEMENT DELINEATION AND SIGN PLAN

NO SCALE

PD-1

APPROVED FOR PAVEMENT DELINEATION AND SIGN WORK ONLY

STATE OF CALIFORNIA - DEPARTMENT OF TRANSPORTATION
Caltrans® TRAFFIC DESIGN

FUNCTIONAL SUPERVISOR: WILLIAM E. WASSER

CALCULATED-DESIGNED BY: HORMUZD SETHNA
CHECKED BY: TRAN HOANG

REVISED BY
DATE REVISED

LAST REVISION 08-19-13 | DATE PLOTTED => 18-SEP-2013 | TIME PLOTTED => 10:41

Dist	COUNTY	ROUTE	POST MILES TOTAL PROJECT	SHEET No.	TOTAL SHEETS
03, 08	Sac, SBd	5, 15	23.3, R107.3	23	330

REGISTERED CIVIL ENGINEER 08-19-13 DATE

9-16-13
PLANS APPROVAL DATE

REGISTERED PROFESSIONAL ENGINEER TRAN HOANG No. C54996 Exp. 06/30/14 CIVIL STATE OF CALIFORNIA

THE STATE OF CALIFORNIA OR ITS OFFICERS OR AGENTS SHALL NOT BE RESPONSIBLE FOR THE ACCURACY OR COMPLETENESS OF SCANNED COPIES OF THIS PLAN SHEET.

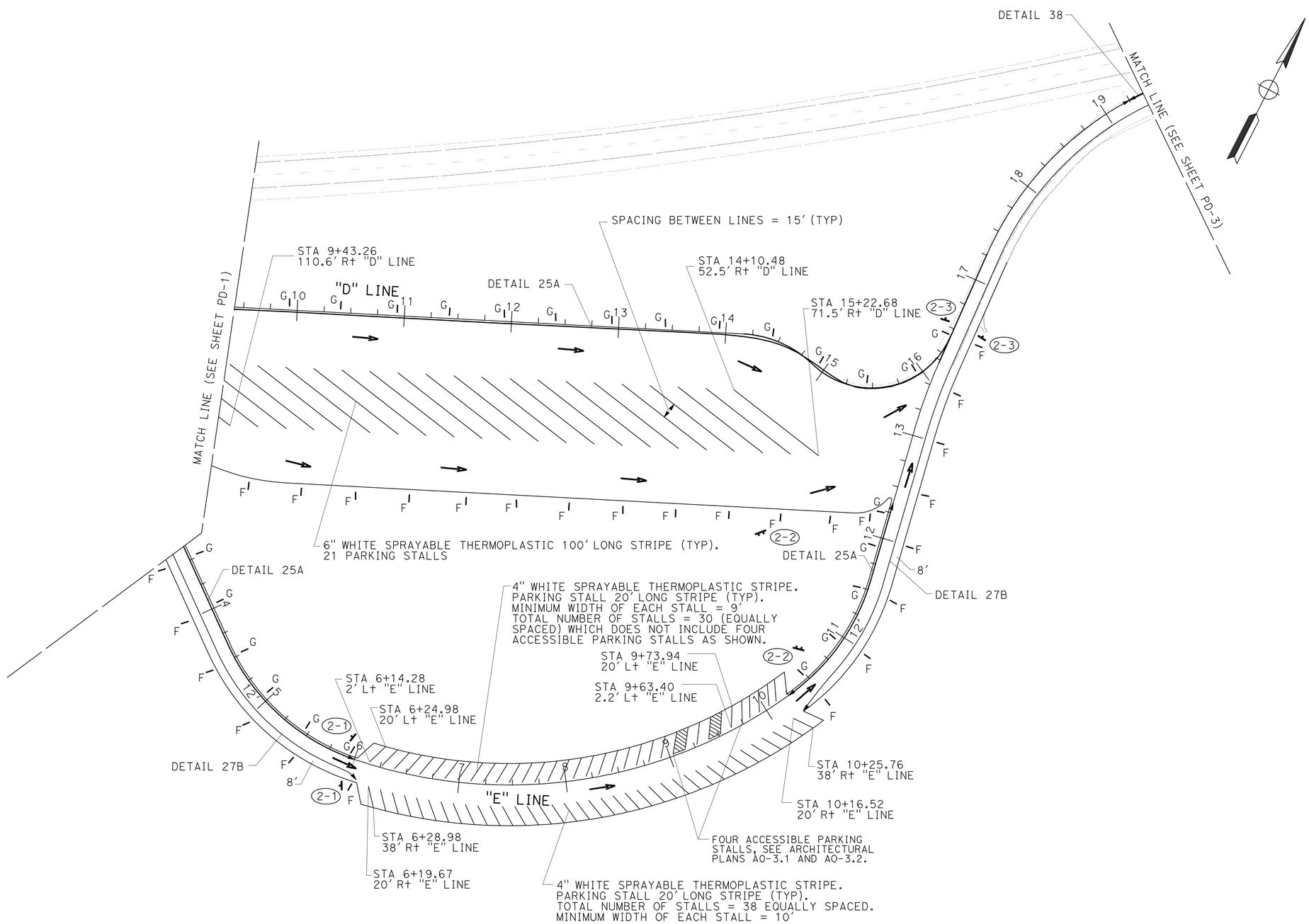

APPROVED FOR PAVEMENT DELINEATION AND SIGN WORK ONLY

PAVEMENT DELINEATION AND SIGN PLAN

NO SCALE

PD-2

STATE OF CALIFORNIA - DEPARTMENT OF TRANSPORTATION
Caltrans® **TRAFFIC DESIGN**

FUNCTIONAL SUPERVISOR: WILLIAM E. WASSER

CALCULATED-DESIGNED BY: HORMUZD SETHNA
CHECKED BY: TRAN HOANG

REVISED BY
DATE REVISED

LAST REVISION 08-19-13 | DATE PLOTTED => 18-SEP-2013 | TIME PLOTTED => 10:41

Dist	COUNTY	ROUTE	POST MILES TOTAL PROJECT	SHEET No.	TOTAL SHEETS
03, 08	Sac, SBd	5, 15	23.3, R107.3	24	330

REGISTERED CIVIL ENGINEER — DATE: 9-06-13

9-16-13
PLANS APPROVAL DATE

REGISTERED PROFESSIONAL ENGINEER — TRAN HOANG No. C54996 Exp. 06/30/14 CIVIL — STATE OF CALIFORNIA

THE STATE OF CALIFORNIA OR ITS OFFICERS OR AGENTS SHALL NOT BE RESPONSIBLE FOR THE ACCURACY OR COMPLETENESS OF SCANNED COPIES OF THIS PLAN SHEET.

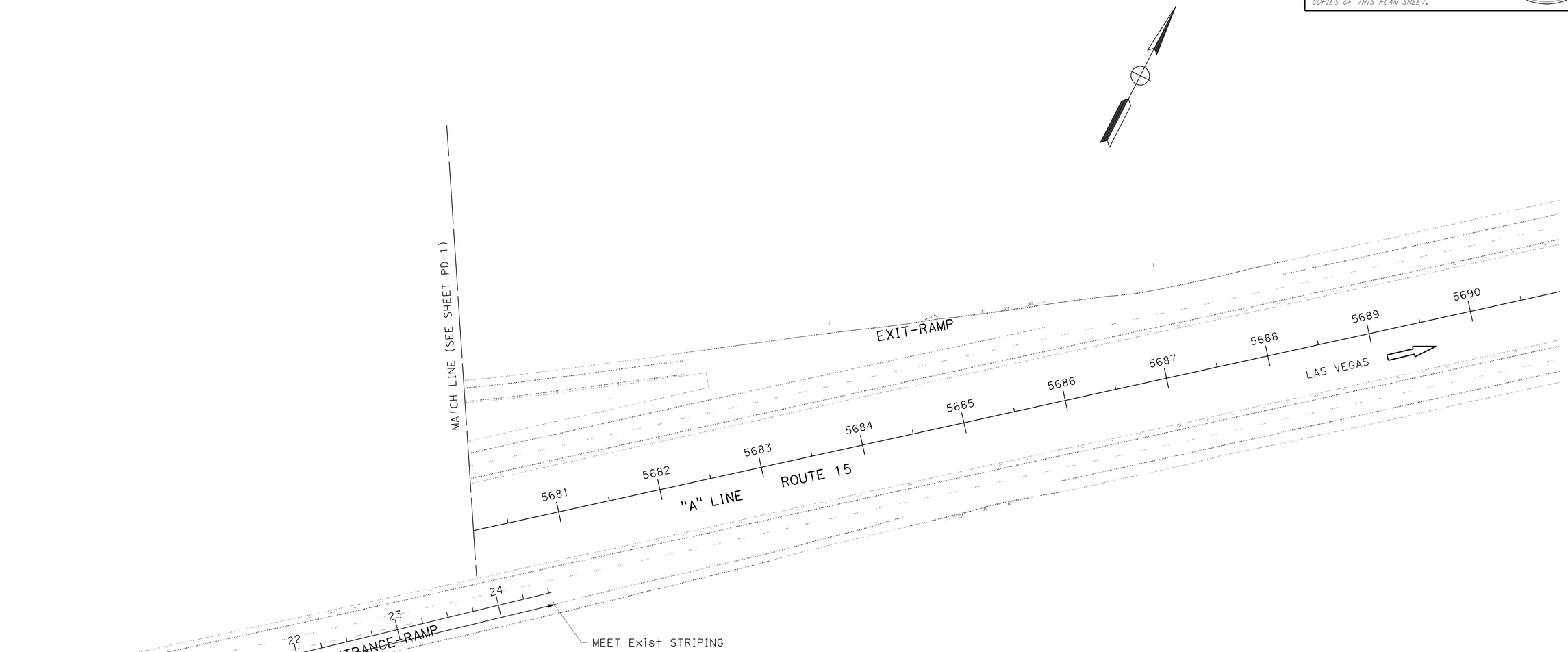

PAVEMENT DELINEATION

NO SCALE

PD-3

APPROVED FOR PAVEMENT DELINEATION WORK ONLY

STATE OF CALIFORNIA - DEPARTMENT OF TRANSPORTATION
Caltrans® TRAFFIC DESIGN

FUNCTIONAL SUPERVISOR: WILLIAM E. WASSER
CALCULATED-DESIGNED BY: HORMUZD SETHNA
CHECKED BY: TRAN HOANG
REVISED BY
DATE REVISED

LAST REVISION 09-06-13 | DATE PLOTTED => 18-SEP-2013 | TIME PLOTTED => 10:41

Dist	COUNTY	ROUTE	POST MILES TOTAL PROJECT	SHEET No.	TOTAL SHEETS
03, 08	Sac, SBd	5, 15	23.3, R107.3	25	330

REGISTERED CIVIL ENGINEER 08-19-13 DATE

9-16-13
PLANS APPROVAL DATE

REGISTERED PROFESSIONAL ENGINEER TRAN HOANG No. C54996 Exp. 08/07/13 CIVIL STATE OF CALIFORNIA

THE STATE OF CALIFORNIA OR ITS OFFICERS OR AGENTS SHALL NOT BE RESPONSIBLE FOR THE ACCURACY OR COMPLETENESS OF SCANNED COPIES OF THIS PLAN SHEET.

NOTE:

1. REFER TO ARCHITECTURAL PLANS FOR PAVEMENT DELINEATION QUANTITIES OF ACCESSIBLE PARKING.

PAVEMENT DELINEATION QUANTITIES

SHEET No.	LOCATION/STATION	DETAIL No. OR PAVEMENT MARKING	PAVEMENT MARKER RETROREFLECTIVE TYPE G	PAVEMENT MARKER RETROREFLECTIVE TYPE H	DELINEATOR (CLASS 2) EA TYPE F	DELINEATOR (CLASS 2) EA TYPE G	THERMOPLASTIC TRAFFIC STRIPE (SPRAYABLE) 4 INCH YELLOW	4 INCH WHITE	6 INCH WHITE	8 INCH WHITE	THERMOPLASTIC PAVEMENT MARKING
			EA		EA		FT				SQFT
PD-1, PD-2	"D" 0+00 TO "E" 6+10	27B	-	-	-	-	-	1310	-	-	-
PD-2, PD-3	"E" 10+25 TO "D" 24+50	27B	-	-	-	-	-	1175	-	-	-
PD-1, PD-2	"E" 1+50 TO 6+00	25A	-	20	-	-	450	-	-	-	-
PD-2	"E" 10+25 TO 12+35	25A	-	10	-	-	210	-	-	-	-
PD-1, PD-2	"D" 3+00 TO 19+25	25A	-	69	-	-	1625	-	-	-	-
PD-2, PD-3	"D" 19+25 TO 20+40	38	6							115	
PD-2	"E" 6+00 TO 10+25	4" WHITE PARKING STRIPES	-	-	-	-	-	1590	-	-	-
PD-1, PD-2	"D" 8+10 TO 15+25	6" WHITE PARKING STRIPES	-	-	-	-	-	-	2200	-	-
PD-1, PD-2	NB REST AREA (18 LOCATIONS)	TYPE V ARROW	-	-	-	-	-	-	-	-	594
PD-1	"D" 7+50 TO 8+60	36	12	-	-	-	-	-	-	184	-
PD-1, PD-2	NB REST AREA	-	-	-	38	37	-	-	-	-	-
SUBTOTAL			18	99	38	37	2285	4075	2200	299	594
TOTAL			117		75		8859				594

STATE OF CALIFORNIA - DEPARTMENT OF TRANSPORTATION
Caltrans® TRAFFIC DESIGN

FUNCTIONAL SUPERVISOR: WILLIAM E. WASSER
CALCULATED-DESIGNED BY: HORMUZD SETHNA
CHECKED BY: TRAN HOANG
REVISED BY
DATE REVISED

PAVEMENT DELINEATION QUANTITIES

PDQ-1

LAST REVISION 08-19-13
DATE PLOTTED => 18-SEP-2013
TIME PLOTTED => 10:41

Dist	COUNTY	ROUTE	POST MILES TOTAL PROJECT	SHEET No.	TOTAL SHEETS
03, 08	Sac, SBd	5, 15	23.3, R107.3	26	330

REGISTERED CIVIL ENGINEER 08-19-13 DATE

9-16-13
PLANS APPROVAL DATE

REGISTERED PROFESSIONAL ENGINEER TRAN HOANG No. C54996 Exp. 06/30/14 CIVIL STATE OF CALIFORNIA

THE STATE OF CALIFORNIA OR ITS OFFICERS OR AGENTS SHALL NOT BE RESPONSIBLE FOR THE ACCURACY OR COMPLETENESS OF SCANNED COPIES OF THIS PLAN SHEET.

SIGN # 1-2: G-SPECIAL (A)

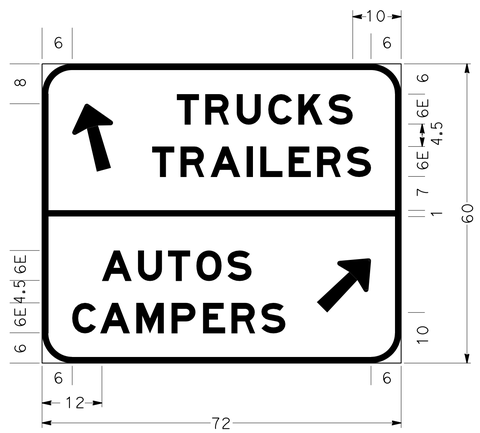

3.0" RADIUS, 1.0" BORDER;
ANGLE OF TOP LEFT ARROW IS 105 DEGREES.
ANGLE OF BOTTOM RIGHT ARROW IS 45 DEGREES.
ALL DIMENSIONS ARE IN INCHES.
COLOR: WHITE LEGEND ON GREEN BACKGROUND.
ARROW SIZE: 8.30" X 13.70"

SIGN # 2-2: G-SPECIAL (B)

3.0" RADIUS, 0.5" BORDER;
ALL DIMENSIONS ARE IN INCHES.
COLOR: WHITE LEGEND ON BROWN BACKGROUND.

SIGN DETAIL PLAN

NO SCALE

SD-1

STATE OF CALIFORNIA - DEPARTMENT OF TRANSPORTATION
Caltrans® TRAFFIC DESIGN

FUNCTIONAL SUPERVISOR: WILLIAM E. WASSSER
CALCULATED-DESIGNED BY: HORMUZD SETHNA
CHECKED BY: TRAN HOANG
REVISED BY
DATE REVISED

LAST REVISION 08-19-13 | DATE PLOTTED => 18-SEP-2013 | TIME PLOTTED => 10:50

Dist	COUNTY	ROUTE	POST MILES TOTAL PROJECT	SHEET No.	TOTAL SHEETS
03, 08	Sac, SBd	5, 15	23.3, R107.3	27	330

REGISTERED CIVIL ENGINEER 08-19-13 DATE

9-16-13
PLANS APPROVAL DATE

REGISTERED PROFESSIONAL ENGINEER TRAN HOANG No. C54996 Exp. 08/07/13 CIVIL STATE OF CALIFORNIA

THE STATE OF CALIFORNIA OR ITS OFFICERS OR AGENTS SHALL NOT BE RESPONSIBLE FOR THE ACCURACY OR COMPLETENESS OF SCANNED COPIES OF THIS PLAN SHEET.

NOTES:

1. EXACT LOCATION & POSITION OF ROADSIDE SIGNS TO BE DETERMINED BY THE ENGINEER.
2. POST LENGTHS GIVEN ARE APPROXIMATE. EXACT LENGTH TO BE DETERMINED BY THE ENGINEER.

ROADSIDE SIGN QUANTITIES

SIGN No.	SIGN CODE	POST LENGTH		POST SIZE			ROADSIDE SIGN		REMARKS
		L†	R†	4"x4"	4"x6"	6"x6"	ONE POST	TWO POST	
		FT	FT				EA	EA	
1-1	W13-2 (20 MPH)	16′	-	-	X	-	1	-	-
1-2	G-SPECIAL (A)	18′	18′	-	-	X	-	2	-
1-3	R5-1	12′	-	X	-	-	2	-	-
2-1	R5-1	12′	-	X	-	-	2	-	-
2-2	G-SPECIAL (B)	14′	-	-	X	-	2	-	EXACT SIZE OF POST TO BE DETERMINED IN THE FIELD BY THE ENGINEER
2-3	G92 (CA)	16′	-	-	X	-	2	-	-
TOTAL							9	2	-

SIGN QUANTITIES

SQ-1

REVISED BY | DATE REVISED
HORMUZD SETHNA | TRAN HOANG
CALCULATED-DESIGNED BY | CHECKED BY
FUNCTIONAL SUPERVISOR
WILLIAM E. WASSER

STATE OF CALIFORNIA - DEPARTMENT OF TRANSPORTATION
Caltrans® TRAFFIC DESIGN

LAST REVISION 08-19-13 | DATE PLOTTED => 18-SEP-2013 | TIME PLOTTED => 10:50

Dist	COUNTY	ROUTE	POST MILES TOTAL PROJECT	SHEET No.	TOTAL SHEETS
03, 08	Sac, SBd	5, 15	23.3, R107.3	28	330

REGISTERED CIVIL ENGINEER 08-19-13 DATE

9-16-13
PLANS APPROVAL DATE

REGISTERED PROFESSIONAL ENGINEER TRAN HOANG No. C54996 Exp. 06/30/14 CIVIL STATE OF CALIFORNIA

THE STATE OF CALIFORNIA OR ITS OFFICERS OR AGENTS SHALL NOT BE RESPONSIBLE FOR THE ACCURACY OR COMPLETENESS OF SCANNED COPIES OF THIS PLAN SHEET.

NOTES:

EXACT LOCATION & POSITION OF ROADSIDE SIGNS TO BE DETERMINED BY THE ENGINEER.

POST LENGTHS GIVEN ARE APPROXIMATE. EXACT LENGTH TO BE DETERMINED BY THE ENGINEER.

ABBREVIATIONS:

L = LENGTH OF SIGN

D = DEPTH OF SIGN

SIGN PANEL MATERIAL SUMMARY

SIGN No.	SIGN CODE	SIGN DIMENSION L x D OR AS SPECIFIED	SINGLE FACED	BACKGROUND		LEGEND		GRAFFITI FILM	ROADSIDE SINGLE-SHEET		REMARKS
									FRAMED ALUMINUM	UNFRAMED ALUMINUM	
				SHEETING COLOR	RETROREFLECTIVE ASTM TYPE	SHEETING COLOR	RETROREFLECTIVE ASTM TYPE	PREMIUM	0.080 "	0.080 "	
									SQFT	SQFT	
1-1	W13-2 (20 MPH)	36" x 48"	X	YELLOW	IV	BLACK	-	X	-	12.0	1 SIGN
1-2	G-SPECIAL (A)	72" x 60"	X	GREEN	III	WHITE	IV	X	60.0	-	2 SIGNS
1-3	R5-1	30" x 30"	X	RED	VII	WHITE	-	X	-	12.5	2 SIGNS
2-1	R5-1	30" x 30"	X	RED	VII	WHITE	-	X	-	12.5	2 SIGNS
2-2	G-SPECIAL (B)	42" x 24"	X	BROWN	III	WHITE	IV	X	-	14.0	2 SIGNS
2-3	G92 (CA)	48" x 30"	X	GREEN	III	WHITE	IV	X	-	20.0	2 SIGNS
SHEET TOTAL (SQFT)									60.0	71.0	
GRAND TOTAL (SQFT)									60.0	71.0	

NOTE:
CALIFORNIA SIGN CODES ARE DESIGNATED BY (CA);
OTHERWISE, FEDERAL SIGN CODES ARE SHOWN

REVISED BY | DATE REVISED

HORMUZD SETHNA | TRAN HOANG

CALCULATED-DESIGNED BY | CHECKED BY

FUNCTIONAL SUPERVISOR: WILLIAM E. WASSER

STATE OF CALIFORNIA - DEPARTMENT OF TRANSPORTATION

Caltrans® TRAFFIC DESIGN

SIGN QUANTITIES

SQ-2

LAST REVISION 08-19-13 | DATE PLOTTED => 18-SEP-2013 | TIME PLOTTED => 10:50

Dist	COUNTY	ROUTE	POST MILES TOTAL PROJECT	SHEET No.	TOTAL SHEETS
03, 08	Sac, SBd	5, 15	23.3, R107.3	29	330

REGISTERED CIVIL ENGINEER 09-09-13 DATE

9-16-13
PLANS APPROVAL DATE

REGISTERED PROFESSIONAL ENGINEER GEORGE MORHIG No. C50349 Exp. 06/30/15 CIVIL STATE OF CALIFORNIA

THE STATE OF CALIFORNIA OR ITS OFFICERS OR AGENTS SHALL NOT BE RESPONSIBLE FOR THE ACCURACY OR COMPLETENESS OF SCANNED COPIES OF THIS PLAN SHEET.

ROADWAY QUANTITIES

LOCATION	STATION	COLD PLANE	REMOVE BASE & SURFACING	REMOVE CONCRETE (CURB AND SIDEWALKS)	AB (CLASS 2)	HMA (TYPE C)	MINOR HMA	TACK COAT	SLURRY SEAL	PLACE HOT ASPHALT DIKE (TYPE E)
		SQYD	CY	CY		TON				LF
"D" LINE	0+00.00 - 24+52.52	8,045	700	450	527	2,817	17	8.6	1.7	650
"E" LINE	0+00.00 - 15+00.08		526		569	836	26	4.0		1040
TOTAL		8,045	1,226	450	1,096	3,653	43	12.6	1.7	1,690

EARTHWORK

LOCATION	STATION	ROADWAY EXCAVATION	ROADWAY EMBANKMENT (N)
		CY	
"D" LINE	0+00.00 - 23+62.68	6,389	5,000
"E" LINE	0+00.00 - 15+00.08	415	6,310
BASIN 1		712	0
TOTAL		7,516	11,310

(N): NOT A SEPARATE PAY ITEM, FOR INFORMATION ONLY.

MINOR CONCRETE

LOCATION	MINOR CONCRETE Misc CONSTRUCTION		NOTES
	CURB	SIDEWALK	
	CY		
CURB AND SIDEWALKS *	25.0	382.1	A1-6 SIDEWALK 4" DEPTH
TOTAL	407.1		

* INCLUDING UTILITY PADS.

MINOR CONCRETE (MINOR STRUCTURE)

SHEET	LOCATION	MINOR CONCRETE (MINOR STRUCTURE)	NOTES
		CY	
DQ-1	DRAINAGE SYSTEM 1	12.0	DRAINAGE INLET
DD-2	BASIN 1	1.5	BASIN'S SPILLWAY
TOTAL		13.5	

ROCK SLOPE PROTECTION

SHEET	LOCATION	RSP LIGHT METHOD B	RSP FABRIC
		CY	SQYD
DQ-1	DRAINAGE SYSTEM 1	4.1	13.2
DD-2	BASIN 1	10.7	26.7
TOTAL		14.8	39.9

FENCE (TYPE WM)

SHEET	REMOVE FENCE (TYPE WM)	FENCE (TYPE WM METAL POST)	8' WIRE MESH GATE
	LF	LF	EA
L-2	241	250	4
TOTAL	241	250	4

SUMMARY OF QUANTITIES

Q-1

REVISED BY | DATE REVISED
GEORGE MORGHIG | GEORGE MORGHIG
CALCULATED-DESIGNED BY | CHECKED BY
FUNCTIONAL SUPERVISOR: GEORGE MORGHIG
STATE OF CALIFORNIA - DEPARTMENT OF TRANSPORTATION
Caltrans DESIGN

LAST REVISION 09-09-13 | DATE PLOTTED => 19-SEP-2013 | TIME PLOTTED => 08:19

Dist	COUNTY	ROUTE	POST MILES TOTAL PROJECT	SHEET No.	TOTAL SHEETS
03, 08	Sac, SBd	5, 15	23.3, R107.3	30	330

John A Stanton 9-09-13
LICENSED LANDSCAPE ARCHITECT

9-16-13
PLANS APPROVAL DATE

LICENSED LANDSCAPE ARCHITECT JOHN A. STANTON No. 3485 Signature 03-31-14 Renewal Date 08-27-13 Date STATE OF CALIFORNIA

THE STATE OF CALIFORNIA OR ITS OFFICERS OR AGENTS SHALL NOT BE RESPONSIBLE FOR THE ACCURACY OR COMPLETENESS OF SCANNED COPIES OF THIS PLAN SHEET.

TEMPORARY WATER POLLUTION CONTROL

ITEM	UNIT	TOTAL
TEMPORARY FIBER ROLL	LF	5700
TEMPORARY CONCRETE WASHOUT	EA	2
TEMPORARY SOIL BINDER	SQYD	5000

PERMANENT FENCE (TYPE DESERT TORTOISE)

SHEET	LOCATION	TOTAL
L-1, L-2, L-3	PERIMETER BOTH FACILITIES	LF
		3428

SITE FURNISHINGS AND FENCING

ITEM		SIGN BASE AND SIGN FRAME	PERIMETER WALL	ENTRY MONUMENT SIGN	FROST PROOF YARD HYDRANT ASSEMBLY	PREFABRICATED METAL BENCH	PICNIC TABLES AND BENCHES	PRECAST CONCRETE TRASH RECEPTACLE	PRECAST CONCRETE TRASH RECEPTACLE (RECYCLE)	PRECAST CONCRETE ASH URN	PILASTER	CHAIN LINK FENCE (TYPE CL-6)	4' CHAIN LINK GATE (TYPE CL-6 SLATTED)	6' CHAIN LINK GATE (TYPE CL-6 SLATTED)
UNIT		EA	LF	EA	EA	EA	EA	EA	EA	EA	EA	LF	EA	EA
SHEET No.	LD-1	-	45	-	-	2	-	-	-	-	-	336	-	2
	LD-2	-	375	-	1	5	5	5	5	4	1	37	2	-
	LD-3	5	182	-	1	6	1	2	2	1	-	37	-	-
	LD-4	-	-	1	-	-	-	-	-	-	-	205	1	2
	LD-10	-	-	-	-	-	-	-	-	-	-	-	-	-
	LD-11	-	-	-	-	-	-	-	-	-	-	-	-	-
	LD-12	-	-	-	-	-	-	-	-	-	-	-	-	-
TOTALS		5	602	1	2	13	6	7	7	5	1	615	3	4

SUMMARY OF QUANTITIES

Q-2

REVISED BY | DATE REVISED
R. BAZZA | J. STANTON
CALCULATED-DESIGNED BY | CHECKED BY
SENIOR LANDSCAPE ARCHITECT
BYRON STROUT
STATE OF CALIFORNIA - DEPARTMENT OF TRANSPORTATION
Caltrans® LANDSCAPE DESIGN

LAST REVISION 09-09-13
DATE PLOTTED => 19-SEP-2013
TIME PLOTTED => 05:56

Dist	COUNTY	ROUTE	POST MILES TOTAL PROJECT	SHEET No.	TOTAL SHEETS
03, 08	Sac, SBd	5, 15	23.3, R107.3	31	330

LICENSED LANDSCAPE ARCHITECT

9-16-13
PLANS APPROVAL DATE

LICENSED LANDSCAPE ARCHITECT JOHN A. STANTON No. 5463 Signature 03-31-14 Renewal Date 09-09-13 Date STATE OF CALIFORNIA

THE STATE OF CALIFORNIA OR ITS OFFICERS OR AGENTS SHALL NOT BE RESPONSIBLE FOR THE ACCURACY OR COMPLETENESS OF SCANNED COPIES OF THIS PLAN SHEET.

NOTES:

1. FOR ACCURATE RIGHT OF WAY DATA, CONTACT RIGHT OF WAY ENGINEERING AT THE DISTRICT OFFICE.
2. ENTIRE PROJECT LIMITS ARE DESIGNATED AS BIOLOGICAL MONITORING AREA 1 (BMA 1) FOR DESERT TORTOISE.
3. ENTIRE PROJECT LIMITS ARE DESIGNATED AS ARCHEOLOGICAL MONITORING AREA (AMA) ACCESS PROHIBITED OUTSIDE RIGHT OF WAY FENCE, SEE SHEETS L-1 THRU L-4.

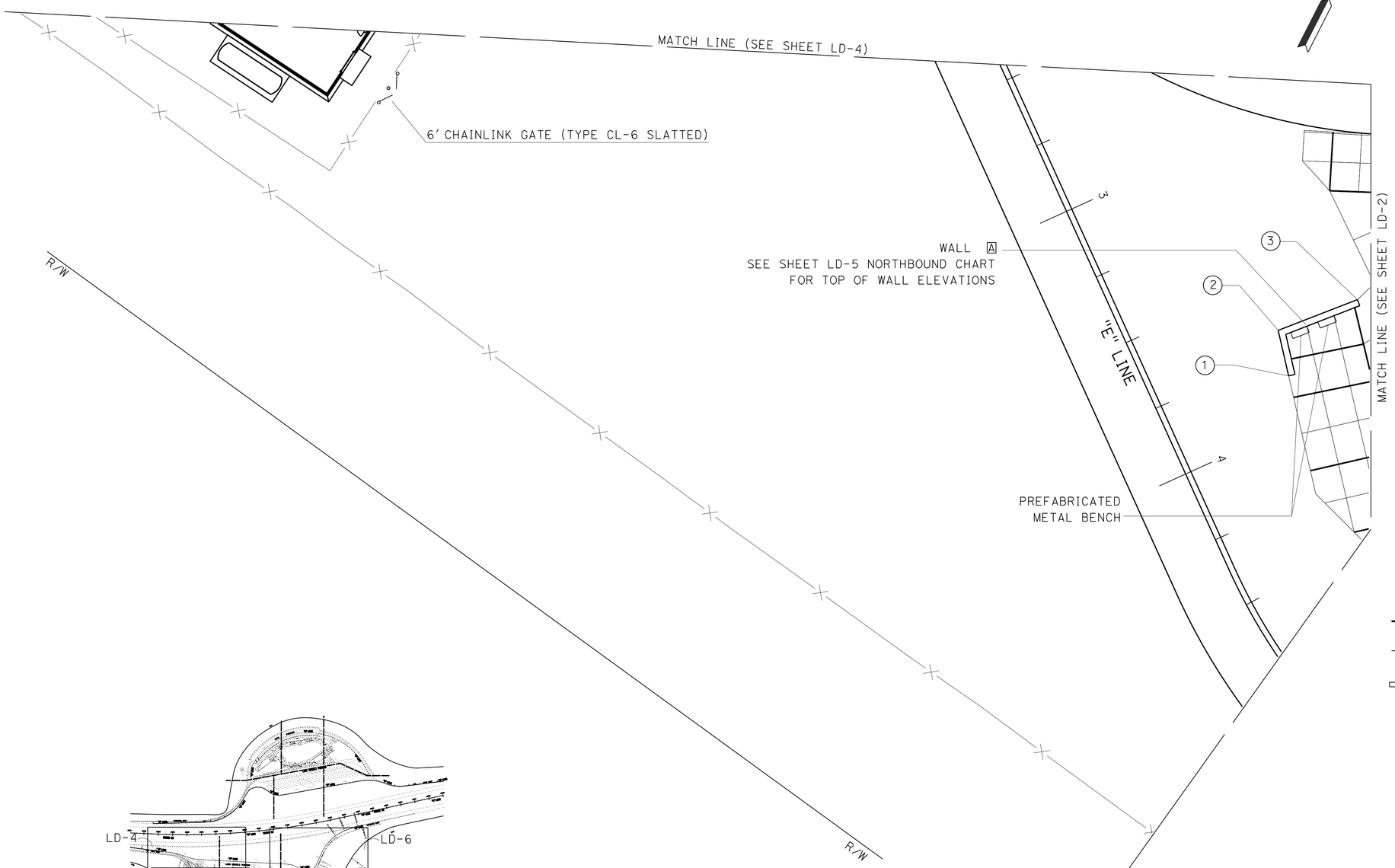

SITE FACILITIES LEGEND

- PRECAST CONCRETE PICNIC TABLE AND BENCHES
- PREFABRICATED METAL BENCH
- PRECAST CONCRETE TRASH RECEPTACLE
- PRECAST CONCRETE ASH URN
- PRECAST CONCRETE TRASH RECEPTACLE (RECYCLE)
- FROST PROOF YARD HYDRANT ASSEMBLY
- FLAGPOLES
- TELEPHONE (SEE BUILDING PLANS)
- DRINKING FOUNTAIN (REFRIGERATED; SEE BUILDING PLANS)
- SIGN BASE
- EXPANSION JOINT
- CONTROL JOINT
- PERIMETER WALL (3) SEE SHEET LD-5
- A WALL
- (1) WALL POINTS

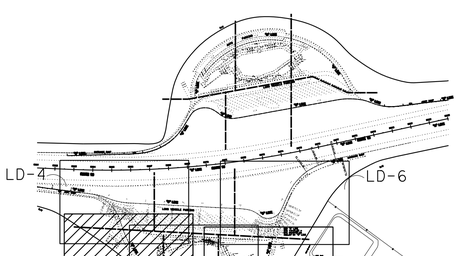

KEY MAP

LANDSCAPE DETAILS
NORTHBOUND

SCALE: 1"= 20'

LD-1

STATE OF CALIFORNIA - DEPARTMENT OF TRANSPORTATION
Caltrans® **LANDSCAPE DESIGN**

SENIOR LANDSCAPE ARCHITECT: BYRON STROUT
CALCULATED-DESIGNED BY: R. BAZZA
CHECKED BY: J. STANTON
REVISED BY
DATE REVISED

LAST REVISION 09-09-13
DATE PLOTTED => 18-SEP-2013
TIME PLOTTED => 10:47

Dist	COUNTY	ROUTE	POST MILES TOTAL PROJECT	SHEET No.	TOTAL SHEETS
03, 08	Sac, SBd	5, 15	23.3, R107.3	32	330

John A Stanton
LICENSED LANDSCAPE ARCHITECT

9-16-13
PLANS APPROVAL DATE

THE STATE OF CALIFORNIA OR ITS OFFICERS OR AGENTS SHALL NOT BE RESPONSIBLE FOR THE ACCURACY OR COMPLETENESS OF SCANNED COPIES OF THIS PLAN SHEET.

LICENSED LANDSCAPE ARCHITECT
JOHN A. STANTON No. 3653
Signature
03-31-14
Renewal Date
09-09-13
STATE OF CALIFORNIA

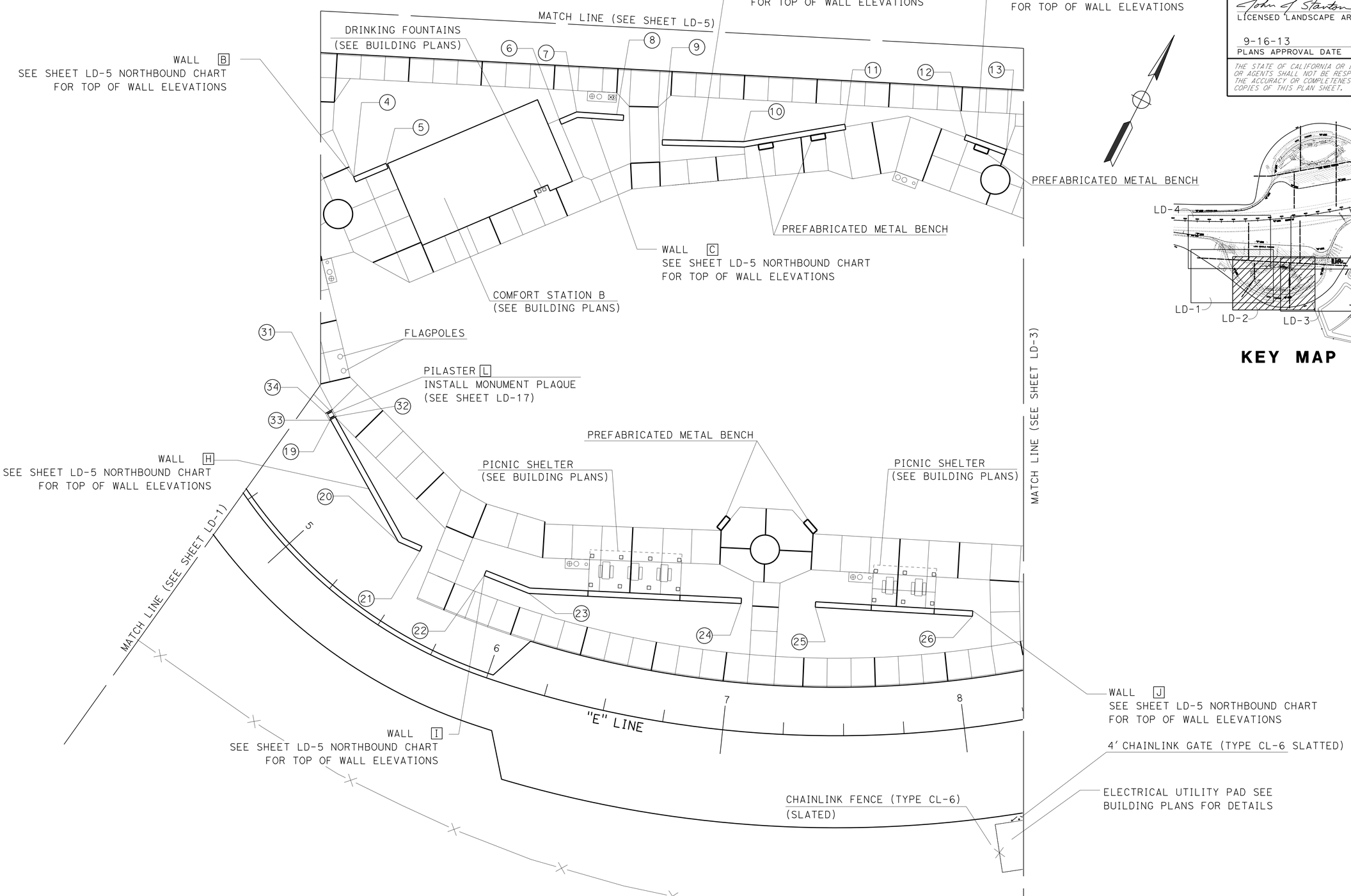

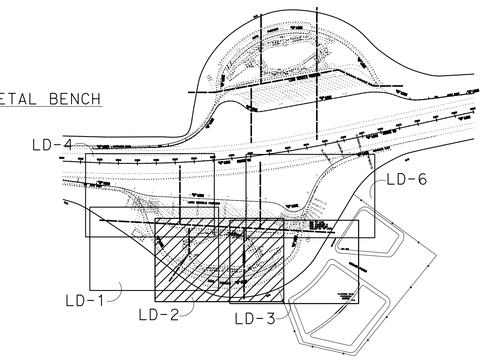

KEY MAP

LANDSCAPE DETAILS
NORTHBOUND

SCALE: 1"= 20'

LD-2

REVISED BY	DATE REVISED
R. BAZZA	J. STANTON

CALCULATED-DESIGNED BY
CHECKED BY

SENIOR LANDSCAPE ARCHITECT
BYRON STROUT

STATE OF CALIFORNIA - DEPARTMENT OF TRANSPORTATION
Caltrans
LANDSCAPE DESIGN

LAST REVISION 09-09-13
DATE PLOTTED => 18-SEP-2013
TIME PLOTTED => 10:47

Dist	COUNTY	ROUTE	POST MILES TOTAL PROJECT	SHEET No.	TOTAL SHEETS
03, 08	Sac, SBd	5, 15	23.3, R107.3	33	330

John A Stanton
LICENSED LANDSCAPE ARCHITECT

9-16-13
PLANS APPROVAL DATE

LICENSED LANDSCAPE ARCHITECT JOHN A STANTON No. 3465 STATE OF CALIFORNIA
Signature 03-31-14 Renewal Date 08-19-13 Date

THE STATE OF CALIFORNIA OR ITS OFFICERS OR AGENTS SHALL NOT BE RESPONSIBLE FOR THE ACCURACY OR COMPLETENESS OF SCANNED COPIES OF THIS PLAN SHEET.

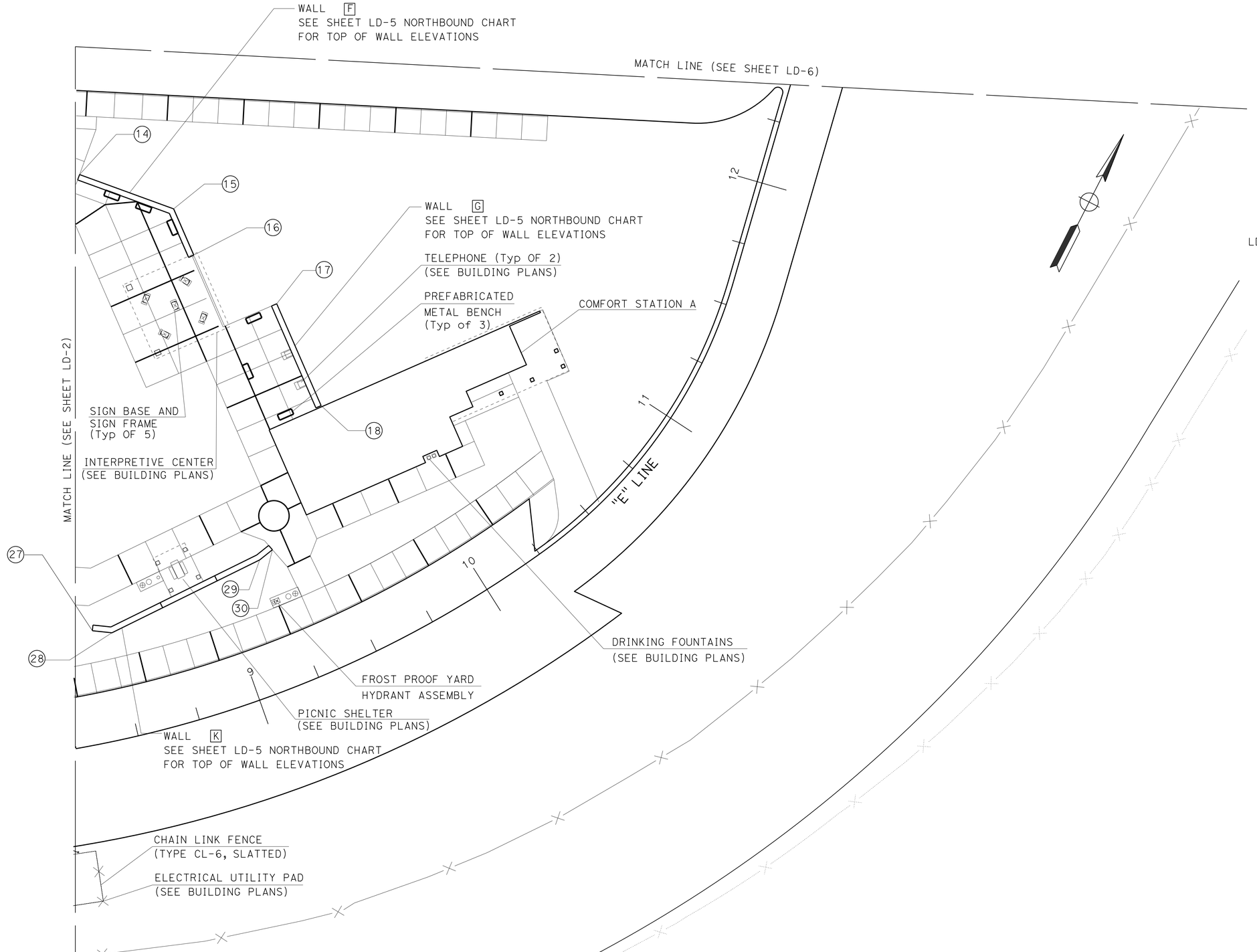

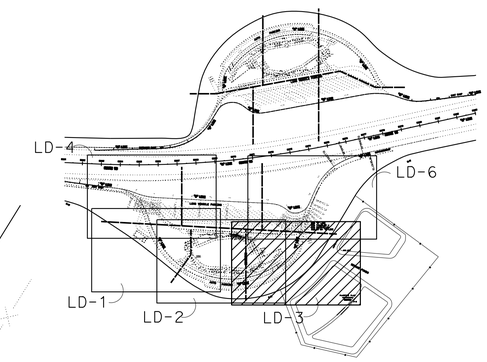

KEY MAP

LANDSCAPE DETAILS
NORTHBOUND

SCALE: 1"= 20′ **LD-3**

STATE OF CALIFORNIA - DEPARTMENT OF TRANSPORTATION
Caltrans® **LANDSCAPE DESIGN**

SENIOR LANDSCAPE ARCHITECT: BYRON STROUT
CALCULATED-DESIGNED BY: R. BAZZA
CHECKED BY: J. STANTON
REVISED BY
DATE REVISED

LAST REVISION 08-19-13
DATE PLOTTED => 19-SEP-2013
TIME PLOTTED => 06:01

Dist	COUNTY	ROUTE	POST MILES TOTAL PROJECT	SHEET No.	TOTAL SHEETS
03, 08	Sac, SBd	5, 15	23.3, R107.3	34	330

John A Stanton
LICENSED LANDSCAPE ARCHITECT

9-16-13
PLANS APPROVAL DATE

LICENSED LANDSCAPE ARCHITECT
JOHN A. STANTON No. 3485
Signature
03-31-14
Renewal Date
09-09-13
Date
STATE OF CALIFORNIA

THE STATE OF CALIFORNIA OR ITS OFFICERS OR AGENTS SHALL NOT BE RESPONSIBLE FOR THE ACCURACY OR COMPLETENESS OF SCANNED COPIES OF THIS PLAN SHEET.

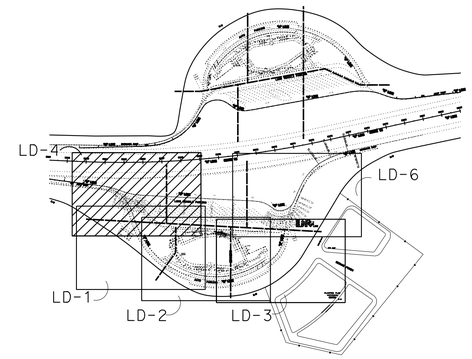

KEY MAP

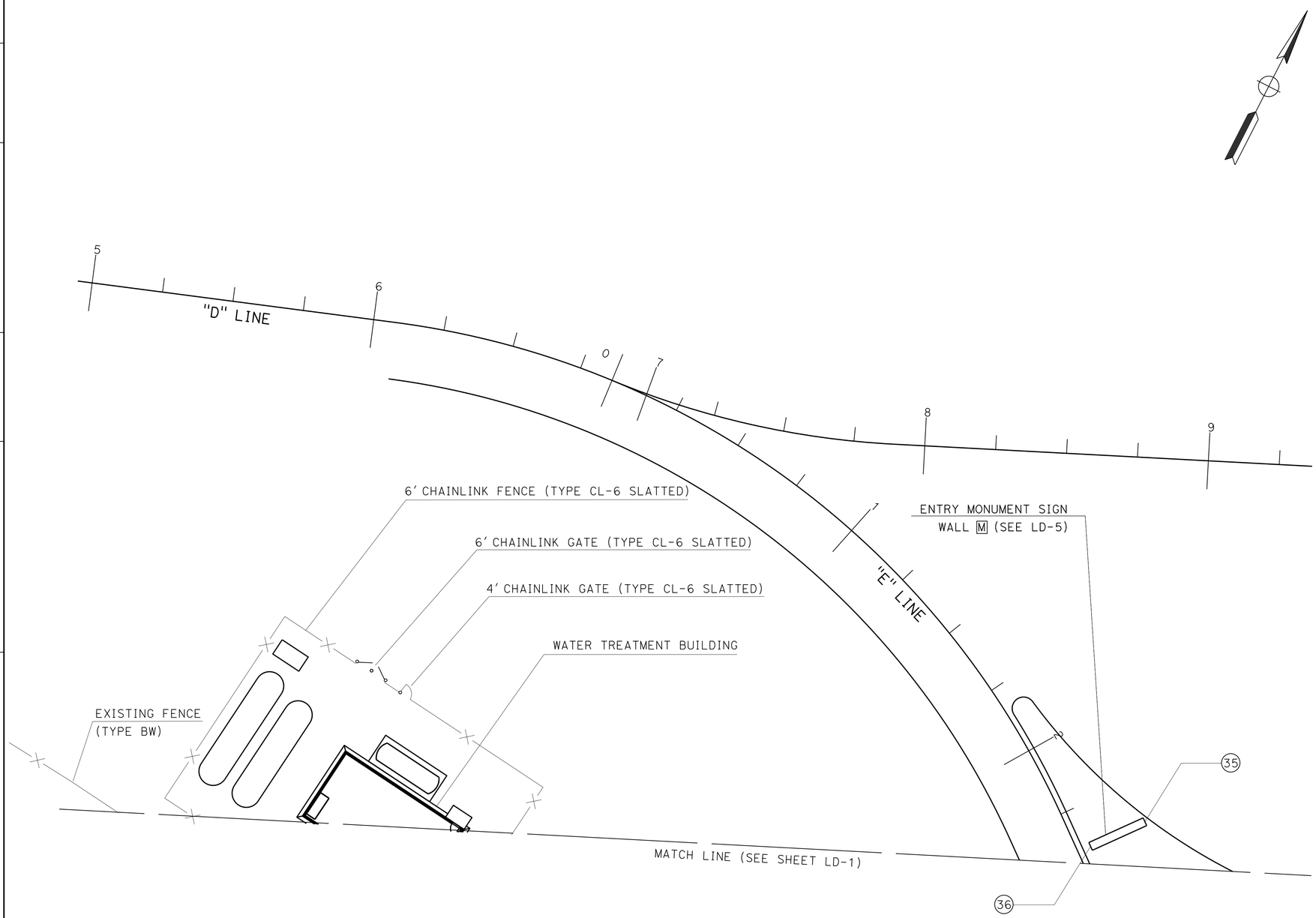

LANDSCAPE DETAILS
NORTHBOUND
SCALE: 1"= 20'

LD-4

STATE OF CALIFORNIA - DEPARTMENT OF TRANSPORTATION
Caltrans
LANDSCAPE DESIGN

SENIOR LANDSCAPE ARCHITECT: BYRON STROUT
CALCULATED-DESIGNED BY: R. BAZZA
CHECKED BY: J. STANTON
REVISED BY
DATE REVISED

LAST REVISION 09-09-13
DATE PLOTTED => 18-SEP-2013
TIME PLOTTED => 10:48

Dist	COUNTY	ROUTE	POST MILES TOTAL PROJECT	SHEET No.	TOTAL SHEETS
03, 08	Sac, SBd	5, 15	23.3, R107.3	35	330

John J Stanton
LICENSED LANDSCAPE ARCHITECT

9-16-13
PLANS APPROVAL DATE

LICENSED LANDSCAPE ARCHITECT JOHN J. STANTON No. 3453 03-31-14 08-19-13 DATE STATE OF CALIFORNIA

THE STATE OF CALIFORNIA OR ITS OFFICERS OR AGENTS SHALL NOT BE RESPONSIBLE FOR THE ACCURACY OR COMPLETENESS OF SCANNED COPIES OF THIS PLAN SHEET.

NORTHBOUND WALLS AND PILASTER

WALL	POINT No.	BOTTOM OF WALL ELEVATIONS IN FEET	TOP OF WALL ELEVATIONS IN FEET
A	1	1738.93	1741.43
	2	1739.16	1741.66
	3	1739.00	1740.50
B	4	1739.20	1740.70
	5	1739.46	1741.96
C	6	1739.46	1741.86
	7	1739.11	1741.86
	8	1738.48	1740.98
D	9	1738.26	1739.76
	10	1738.77	1741.27
	11	1738.65	1741.15
E	12	1737.84	1740.34
	13	1737.30	1738.80
F	14	1737.12	1738.62
	15	1736.66	1739.16
	16	1736.35	1738.85

NORTHBOUND WALLS AND PILASTER

WALL	POINT No.	BOTTOM OF WALL ELEVATIONS IN FEET	TOP OF WALL ELEVATIONS IN FEET
G	17	1736.00	1737.50
	18	1736.21	1738.71
H	19	1738.10	1740.60
	20	1737.44	1738.94
	21	1737.38	1738.88
I	22	1737.25	1738.75
	23	1737.14	1739.64
	24	1736.40	1737.90
J	25	1736.07	1737.57
	26	1735.32	1736.82
K	27	1734.93	1736.43
	28	1734.84	1736.34
	29	1735.48	1736.98
	30	1735.75	1737.25
L	31	1737.13	1742.88
	32	1737.10	1742.85
	33	1737.08	1742.83
	34	1737.11	1742.86
M	35	1740.22	1742.05
	36	1740.31	1742.14

LANDSCAPE DETAILS
NORTHBOUND
LD-5

STATE OF CALIFORNIA - DEPARTMENT OF TRANSPORTATION
Caltrans®
LANDSCAPE DESIGN

SENIOR LANDSCAPE ARCHITECT: BYRON STROUT
CALCULATED-DESIGNED BY: R. BAZZA
CHECKED BY: J. STANTON
REVISED BY
DATE REVISED

LAST REVISION 08-19-13
DATE PLOTTED => 18-SEP-2013
TIME PLOTTED => 10:48

Dist	COUNTY	ROUTE	POST MILES TOTAL PROJECT	SHEET No.	TOTAL SHEETS
03, 08	Sac, SBd	5, 15	23.3, R107.3	36	330

John J. Stanton
LICENSED LANDSCAPE ARCHITECT

9-16-13
PLANS APPROVAL DATE

LICENSED LANDSCAPE ARCHITECT
JOHN J. STANTON No. 3465
Signature
03-31-14
Renewal Date
08-19-13
Date
STATE OF CALIFORNIA

THE STATE OF CALIFORNIA OR ITS OFFICERS OR AGENTS SHALL NOT BE RESPONSIBLE FOR THE ACCURACY OR COMPLETENESS OF SCANNED COPIES OF THIS PLAN SHEET.

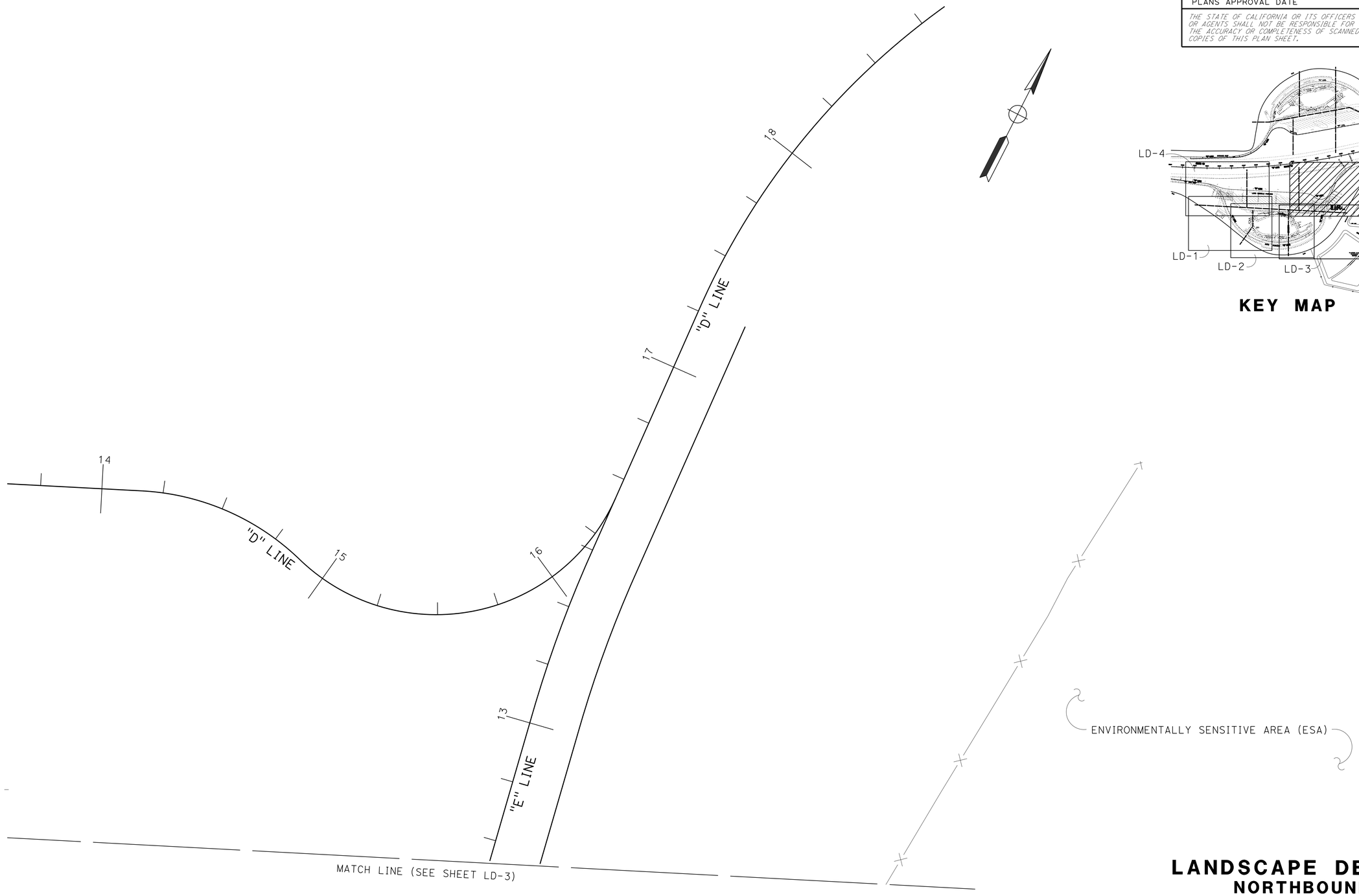

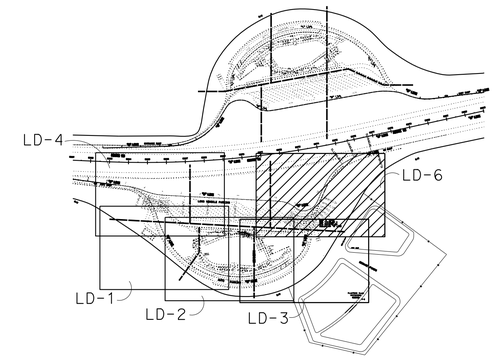

KEY MAP

LANDSCAPE DETAILS
NORTHBOUND
SCALE: 1"= 20'

LD-6

STATE OF CALIFORNIA - DEPARTMENT OF TRANSPORTATION
Caltrans®
LANDSCAPE DESIGN

SENIOR LANDSCAPE ARCHITECT: BYRON STROUT
CALCULATED-DESIGNED BY: R. BAZZA
CHECKED BY: J. STANTON
REVISED BY
DATE REVISED

LAST REVISION 08-19-13
DATE PLOTTED => 18-SEP-2013
TIME PLOTTED => 10:48

Dist	COUNTY	ROUTE	POST MILES TOTAL PROJECT	SHEET No.	TOTAL SHEETS
03, 08	Sac, SBd	5, 15	23.3, R107.3	37	330

John J. Stanton 8-27-13
LICENSED LANDSCAPE ARCHITECT

9-16-13
PLANS APPROVAL DATE

LICENSED LANDSCAPE ARCHITECT JOHN J. STANTON No. 3465 STATE OF CALIFORNIA
Signature
03-31-14 Renewal Date
08-27-13 Date

THE STATE OF CALIFORNIA OR ITS OFFICERS OR AGENTS SHALL NOT BE RESPONSIBLE FOR THE ACCURACY OR COMPLETENESS OF SCANNED COPIES OF THIS PLAN SHEET.

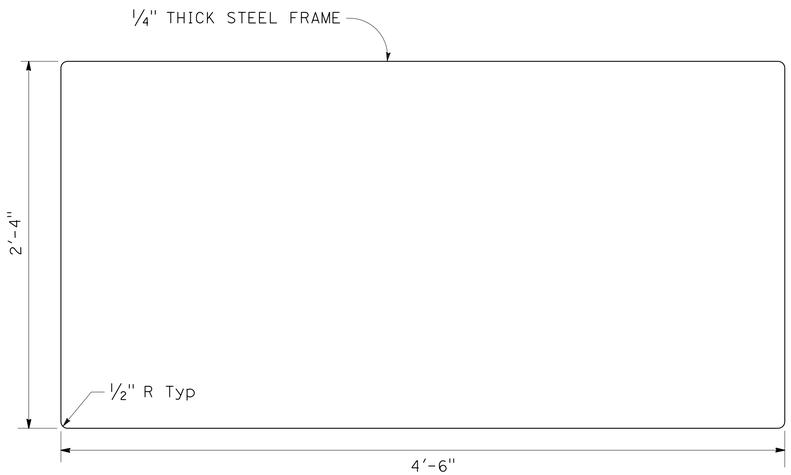

SIGN FRAME

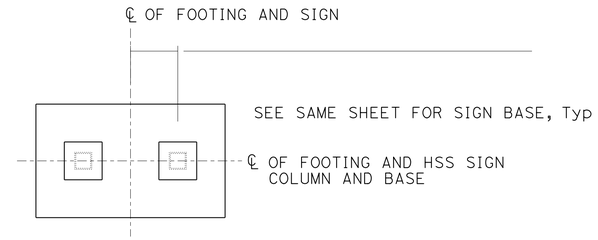

SIGN FOOTING PLAN

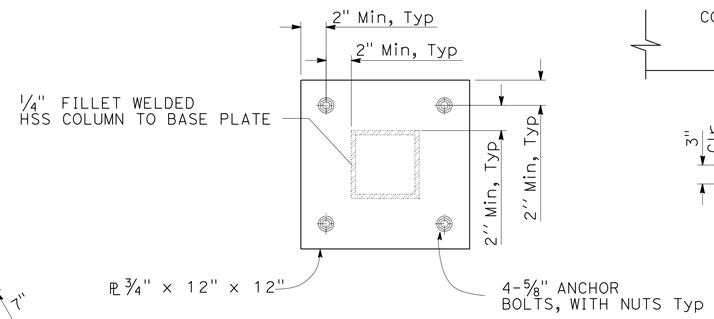

TYPICAL BASE PLATE DETAIL

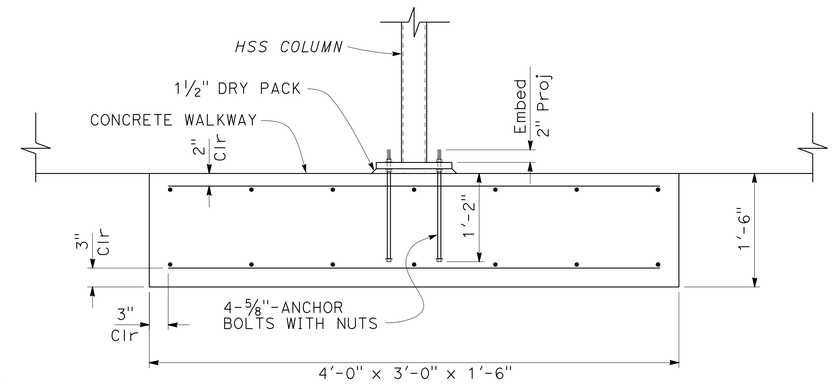

FOOTING DETAIL

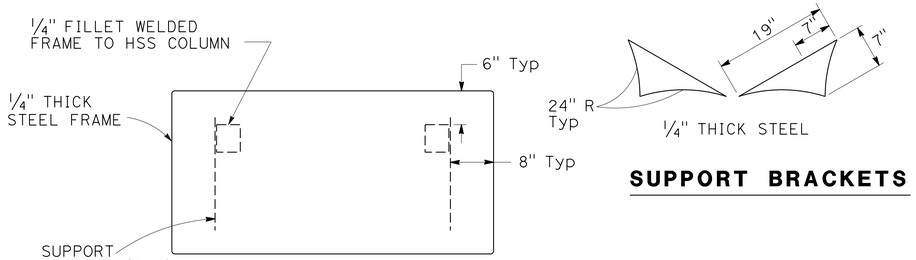

TOP VIEW

SUPPORT BRACKETS

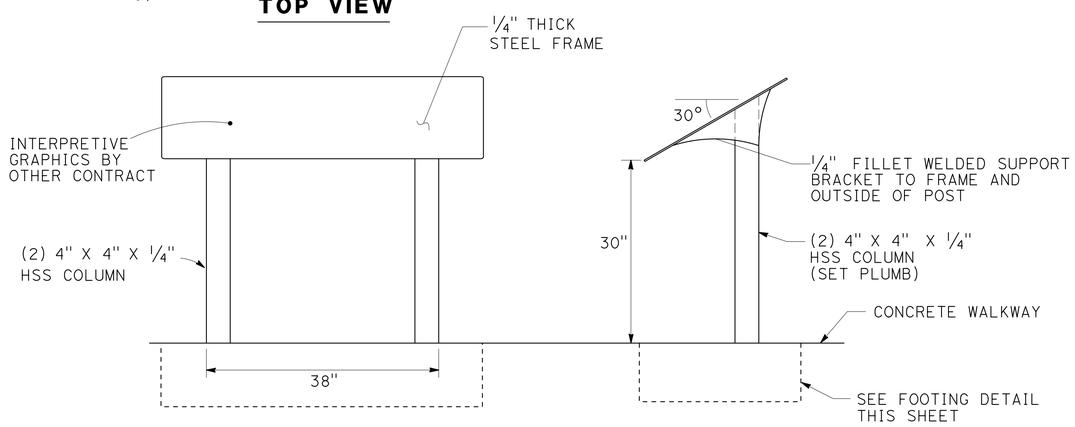

FRONT ELEVATION

SIDE ELEVATION

SIGN BASE

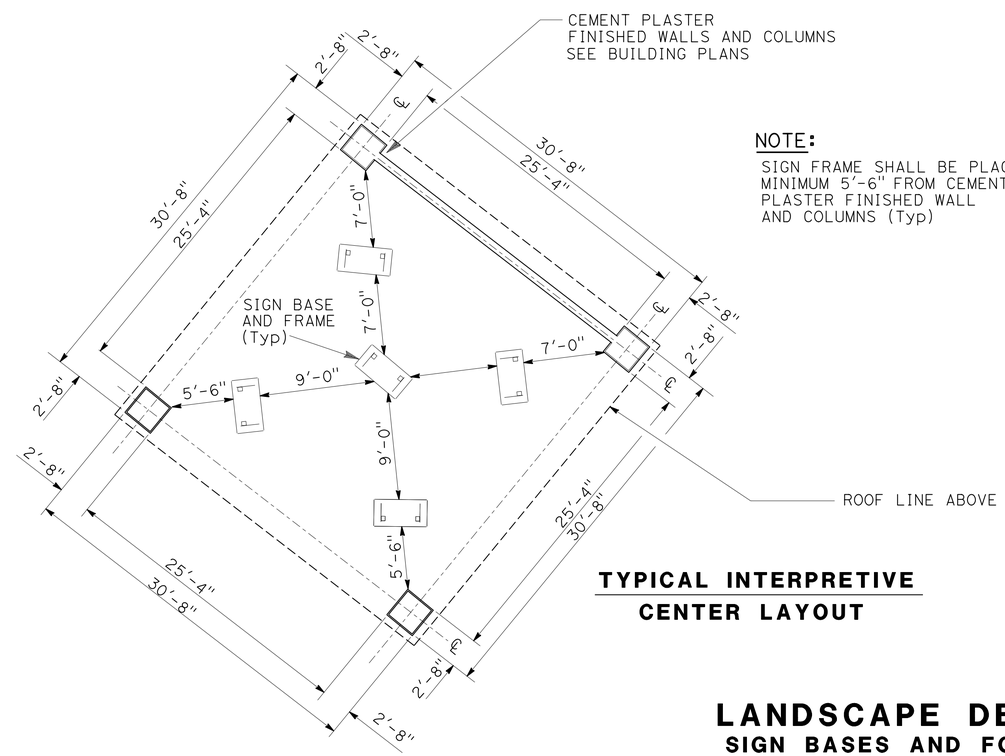

NOTE:
SIGN FRAME SHALL BE PLACED MINIMUM 5'-6" FROM CEMENT PLASTER FINISHED WALL AND COLUMNS (Typ)

TYPICAL INTERPRETIVE CENTER LAYOUT

LANDSCAPE DETAILS
SIGN BASES AND FOOTINGS
NO SCALE **LD-7**

STATE OF CALIFORNIA - DEPARTMENT OF TRANSPORTATION
Caltrans® LANDSCAPE DESIGN
SENIOR LANDSCAPE ARCHITECT: BYRON STROUT
CALCULATED-DESIGNED BY: R. BAZZA
CHECKED BY: J. STANTON
REVISED BY
DATE REVISED

LAST REVISION 08-19-13
DATE PLOTTED => 19-SEP-2013
TIME PLOTTED => 06:49

Dist	COUNTY	ROUTE	POST MILES TOTAL PROJECT	SHEET No.	TOTAL SHEETS
03, 08	Sac, SBd	5, 15	23.3, R107.3	38	330

John of Stanton 8-27-13
LICENSED LANDSCAPE ARCHITECT

9-16-13
PLANS APPROVAL DATE

LICENSED LANDSCAPE ARCHITECT JOHN A. STANTON No. 3485 STATE OF CALIFORNIA
Signature 03-31-14 Renewal Date 08-27-13 Date

THE STATE OF CALIFORNIA OR ITS OFFICERS OR AGENTS SHALL NOT BE RESPONSIBLE FOR THE ACCURACY OR COMPLETENESS OF SCANNED COPIES OF THIS PLAN SHEET.

NOTES:

1. OFFSET TO BE 2'-0" AT MONUMENT LOCATIONS, MEASURED AT RIGHT ANGLES TO R/W LINES. TAPER TO ACHIEVE OFFSET TO BE AT LEAST 20'-0" LONG.
2. POST DIMENSIONS AND WEIGHTS ARE MINIMUMS. LARGER SIZES MAY BE USED ON APPROVAL OF THE ENGINEER.
3. LINE POST SPACING FOR METAL POST EQUALS 10'-0" MAXIMUM. THE WIRE MESH SHALL BE EXTENDED A MINIMUM OF 18 INCHES ABOVE THE GROUND AND SHALL BE BURIED A MINIMUM OF 12 INCHES BELOW THE GROUND.
4. ENVIRONMENTALLY SENSITIVE AREAS FOR THE DESERT TORTOISE SPECIES EXIST AT ALL LOCATIONS OUTSIDE THE R/W. AS FIRST ORDER OF WORK AND PRIOR TO ANY GROUND DISTURBING WORK, FENCE (TYPE DESERT TORTOISE) SHALL BE INSTALLED TO DEFINE THE BOUNDARIES OF THE ENVIRONMENTALLY SENSITIVE AREAS. FENCE (TYPE DESERT TORTOISE) SHALL BE INSTALLED AND REMOVED IN THE PRESENCE OF A BIOLOGIST AND WITHIN CALTRANS RIGHT-OF-WAY ONLY.
5. INSTALL REDIRECTIONAL CONFIGURATION AT BEGIN AND END OF FENCE (TYPE DESERT TORTOISE) LOCATIONS AND AT THE FIRST LINE POST ON EACH SIDE OF A GATE.

WIRE MESH GATE POST
(SEE NOTE 2)

GATE WIDTHS	NOMINAL ID	WEIGHT PER FOOT
UP THRU 6'-0"	2½"	4.95 LB
OVER 6'-0" THRU 12'-0"	3½"	9.11 LB
OVER 12'-0" THRU 18'-0"	5"	14.62 LB
OVER 18'-0" TO 24'-0" Max	6"	18.97 LB

LEGEND:

1"X 2" RECTANGULAR CLEAR MESH GALVANIZED STEEL HARDWARE CLOTH (BURIED 1'-0" Min)

BARBED WIRE FENCING

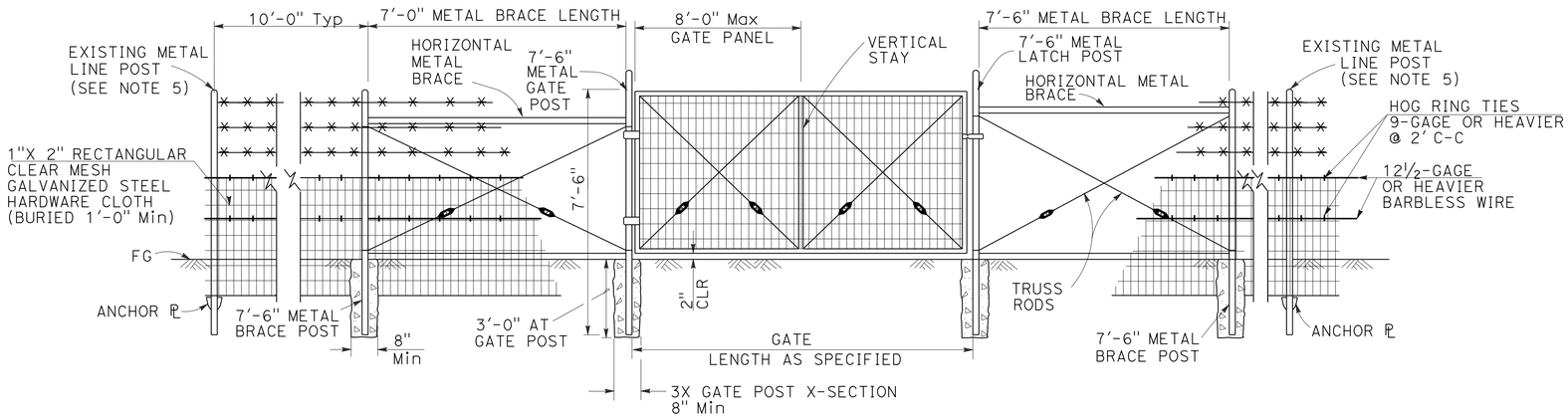

WIRE MESH GATE INSTALLATION FOR METAL POST FENCES

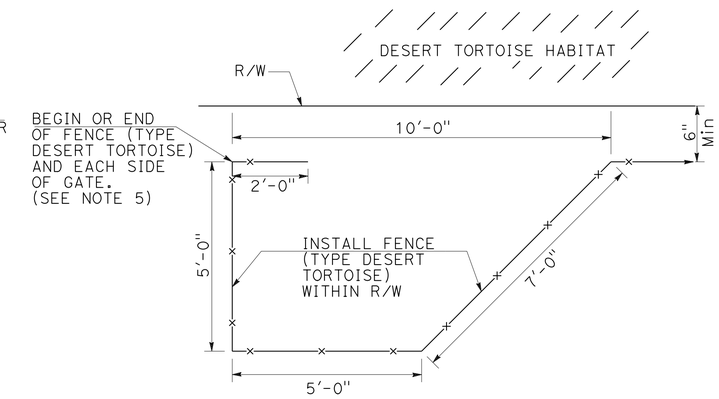

REDIRECTIONAL CONFIGURATION (PLAN VIEW)

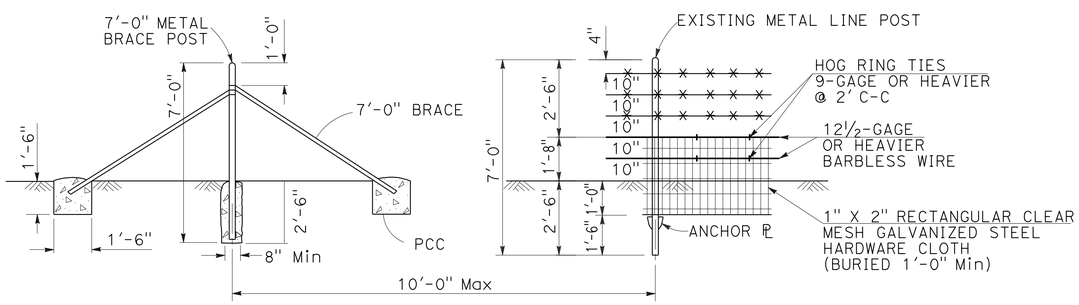

PULL POST ASSEMBLY
AT 660'-0" MAXIMUM INTERVALS

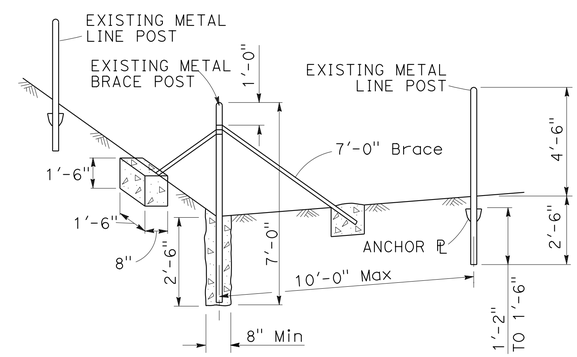

END AND CORNER POST ASSEMBLY

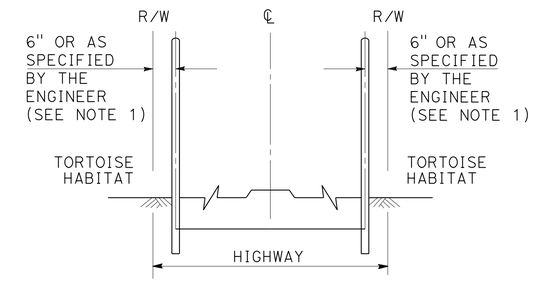

FENCE LOCATION

PERMANENT FENCE (TYPE DESERT TORTOISE)

ALL DIMENSIONS ARE IN INCHES UNLESS OTHERWISE SHOWN

LANDSCAPE DETAILS
NO SCALE **LD-8**

STATE OF CALIFORNIA - DEPARTMENT OF TRANSPORTATION
Caltrans® LANDSCAPE DESIGN
SENIOR LANDSCAPE ARCHITECT BYRON STROUT
CALCULATED-DESIGNED BY R. BAZZA
CHECKED BY J. STANTON
REVISED BY
DATE REVISED

LAST REVISION 08-19-13 | DATE PLOTTED => 18-SEP-2013 TIME PLOTTED => 11:30

Dist	COUNTY	ROUTE	POST MILES TOTAL PROJECT	SHEET No.	TOTAL SHEETS
03, 08	Sac, SBd	5, 15	23.3, R107.3	39	330

John J. Stanton
LICENSED LANDSCAPE ARCHITECT

9-16-13
PLANS APPROVAL DATE

LICENSED LANDSCAPE ARCHITECT JOHN J. STANTON No. 3465 STATE OF CALIFORNIA
Signature
03-31-14
Renewal Date
08-19-13
Date

THE STATE OF CALIFORNIA OR ITS OFFICERS OR AGENTS SHALL NOT BE RESPONSIBLE FOR THE ACCURACY OR COMPLETENESS OF SCANNED COPIES OF THIS PLAN SHEET.

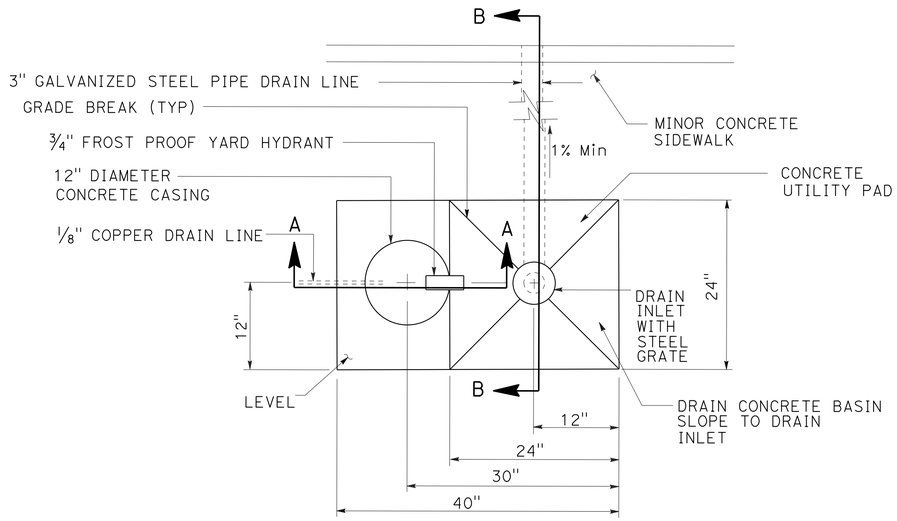

PLAN

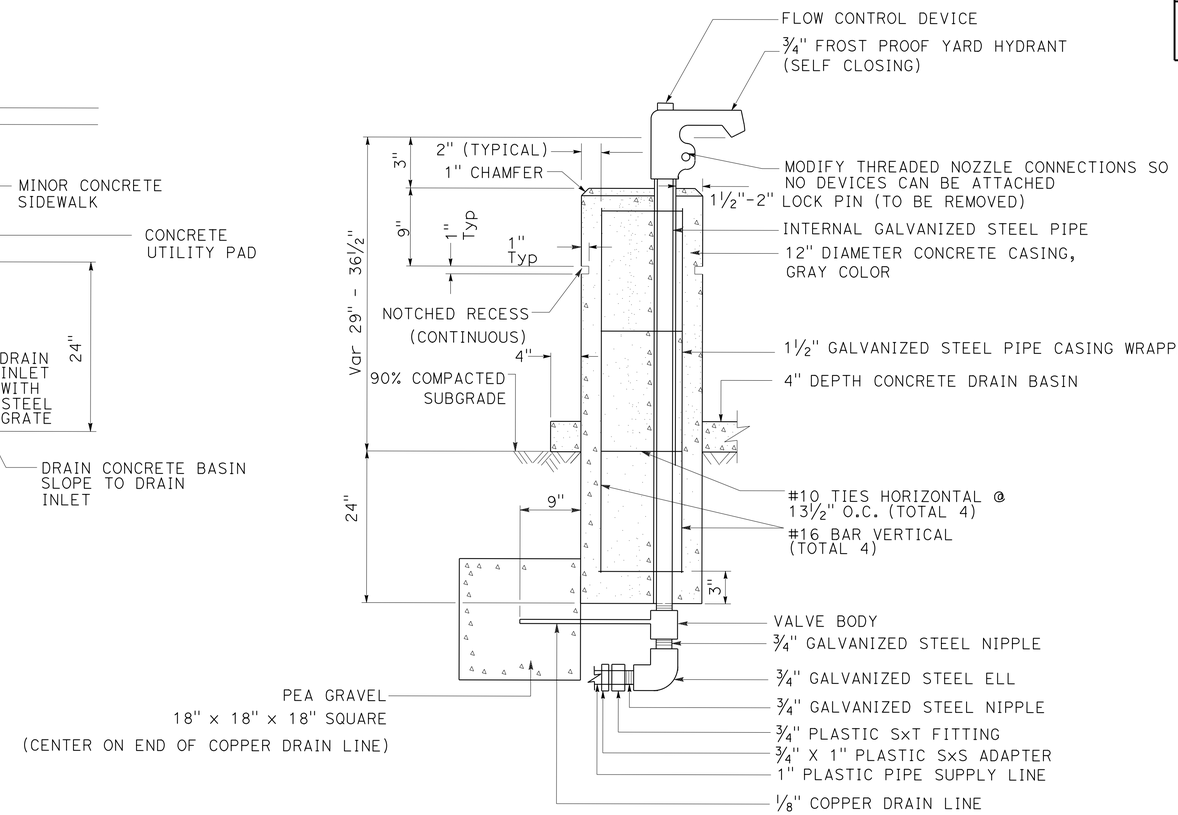

SECTION A-A

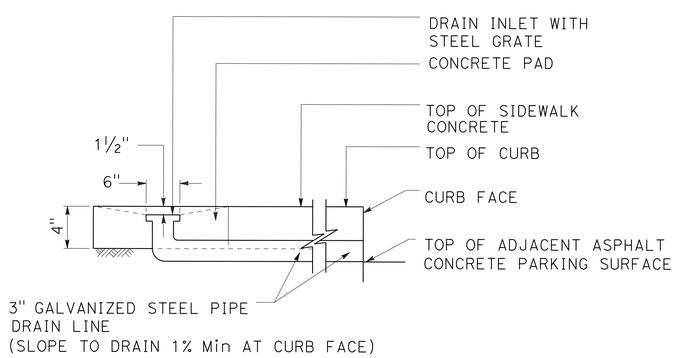

SECTION B-B

FROST PROOF YARD HYDRANT ASSEMBLY

(SELF CLOSING)

LANDSCAPE DETAILS

NO SCALE

LD-9

STATE OF CALIFORNIA - DEPARTMENT OF TRANSPORTATION
Caltrans® LANDSCAPE DESIGN

SENIOR LANDSCAPE ARCHITECT: BYRON STROUT
CALCULATED-DESIGNED BY: R. BAZZA
CHECKED BY: J. STANTON
REVISED BY
DATE REVISED

LAST REVISION 08-19-13 | DATE PLOTTED => 18-SEP-2013 | TIME PLOTTED => 11:22

Dist	COUNTY	ROUTE	POST MILES TOTAL PROJECT	SHEET No.	TOTAL SHEETS
03, 08	Sac, SBd	5, 15	23.3, R107.3	40	330

John J. Stanton
LICENSED LANDSCAPE ARCHITECT

9-16-13
PLANS APPROVAL DATE

LICENSED LANDSCAPE ARCHITECT JOHN J. STANTON No. 3485 STATE OF CALIFORNIA
Signature 03-31-14 Renewal Date 08-19-13 Date

THE STATE OF CALIFORNIA OR ITS OFFICERS OR AGENTS SHALL NOT BE RESPONSIBLE FOR THE ACCURACY OR COMPLETENESS OF SCANNED COPIES OF THIS PLAN SHEET.

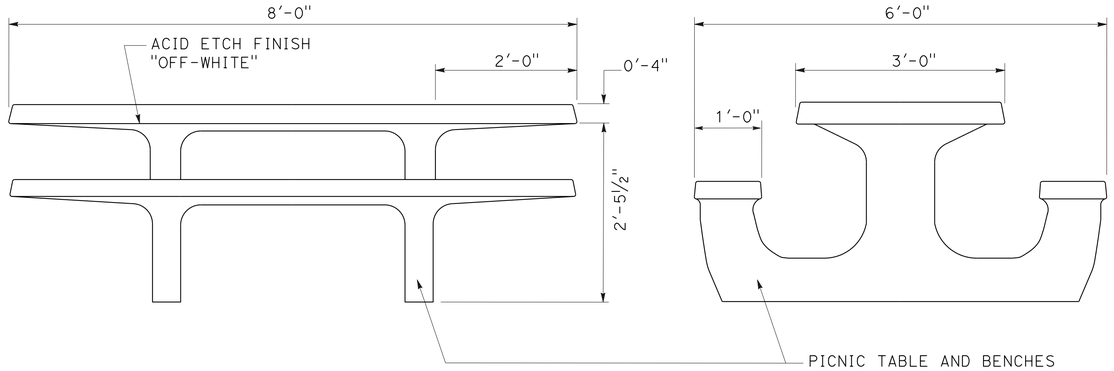

FRONT ELEVATION **SIDE ELEVATION**

PRECAST CONCRETE PICNIC TABLE AND BENCHES
ONE PIECE CONSTRUCTION (DISABLED/WHEELCHAIR ACCESSIBLE)
ADDED ALTERNATE NO.2A AND ADDED ALTERNATE NO.2B

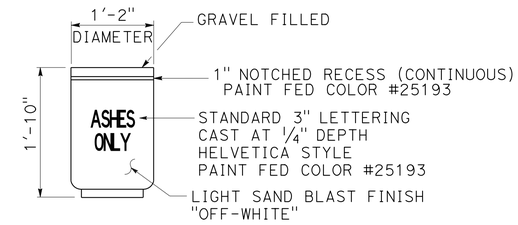

ELEVATION

PRECAST CONCRETE ASH URN
1/4" MAXIMUM SIZE GRAVEL

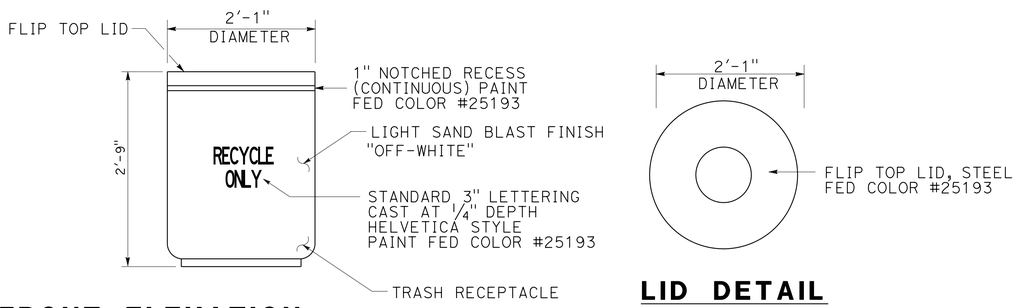

FRONT ELEVATION **LID DETAIL**

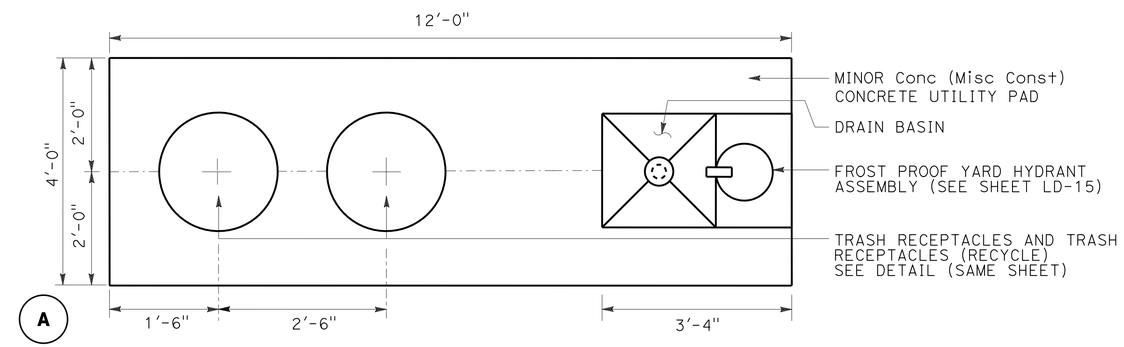

PLAN

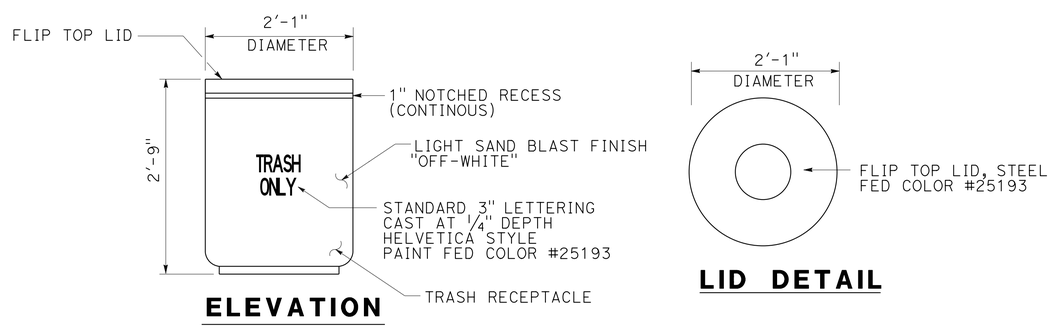

ELEVATION **LID DETAIL**

PRECAST CONCRETE TRASH RECEPTACLE

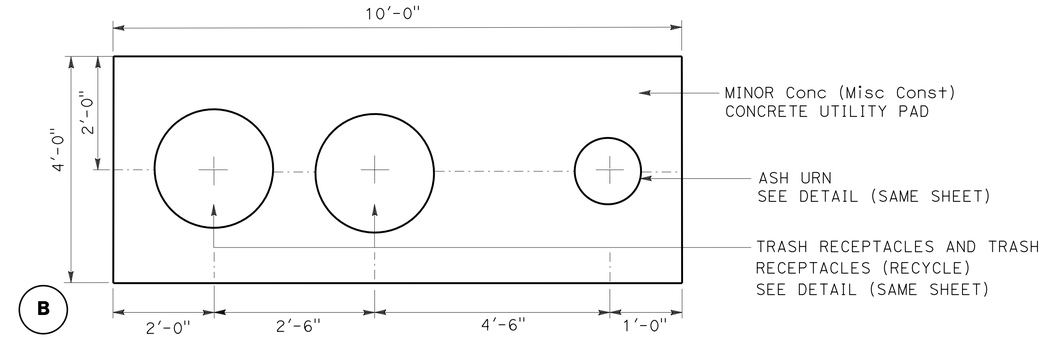

PLAN

PORTLAND CEMENT CONCRETE
WITH TRASH RECEPTACLES AND ASH URNS

LANDSCAPE DETAILS

NO SCALE **LD-10**

STATE OF CALIFORNIA - DEPARTMENT OF TRANSPORTATION
Caltrans® LANDSCAPE DESIGN
SENIOR LANDSCAPE ARCHITECT BYRON STROUT
CALCULATED-DESIGNED BY J. STANTON
CHECKED BY R. BAZZA
REVISED BY
DATE REVISED

LAST REVISION 08-19-13
DATE PLOTTED => 18-SEP-2013
TIME PLOTTED => 11:22

Dist	COUNTY	ROUTE	POST MILES TOTAL PROJECT	SHEET No.	TOTAL SHEETS
03, 08	Sac, SBd	5, 15	23.3, R107.3	41	330

John J Stanton
LICENSED LANDSCAPE ARCHITECT

9-16-13
PLANS APPROVAL DATE

LICENSED LANDSCAPE ARCHITECT JOHN J. STANTON No. 3485 STATE OF CALIFORNIA
Signature 03-31-14
Renewal Date 08-19-13
Date

THE STATE OF CALIFORNIA OR ITS OFFICERS OR AGENTS SHALL NOT BE RESPONSIBLE FOR THE ACCURACY OR COMPLETENESS OF SCANNED COPIES OF THIS PLAN SHEET.

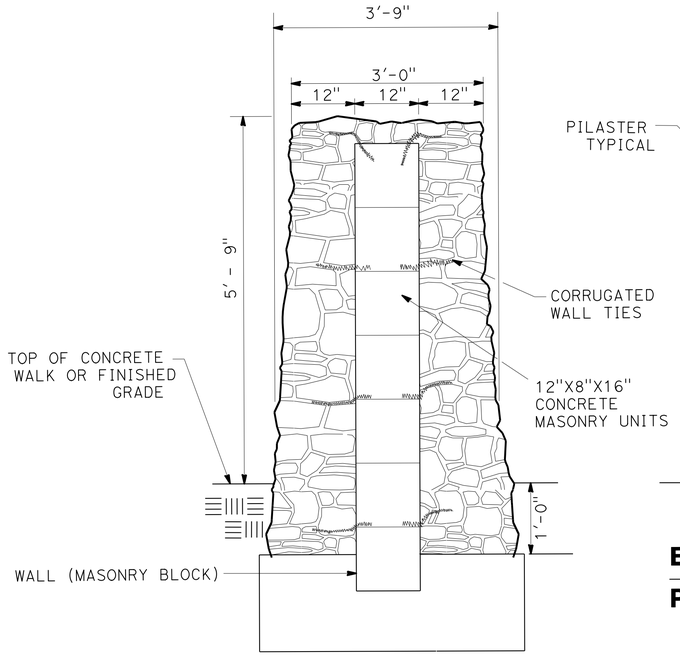

PILASTER SECTION

NO SCALE

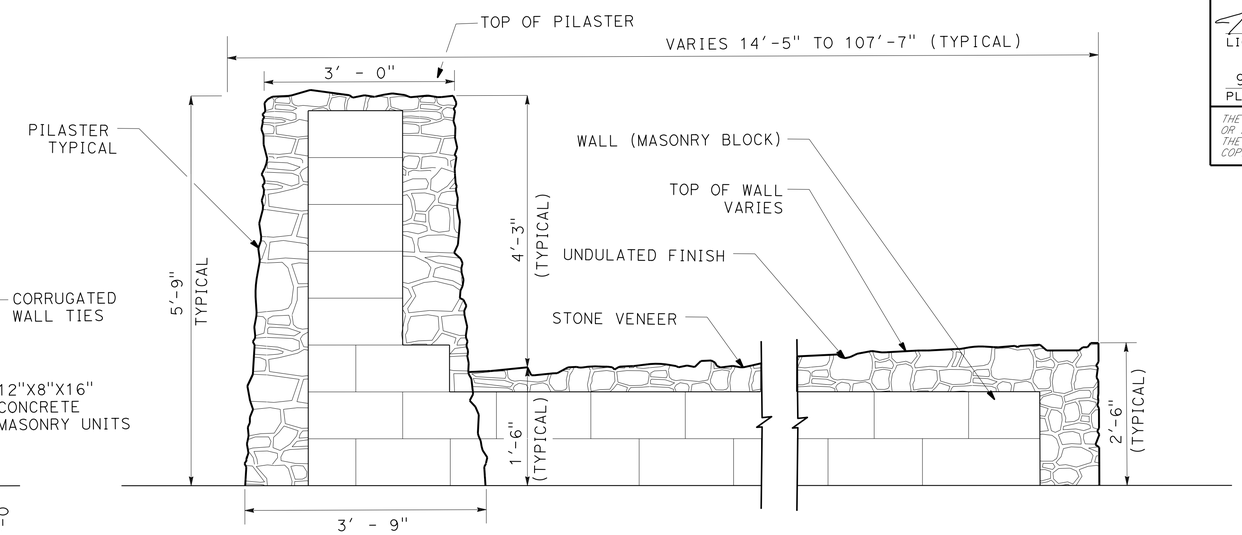

ELEVATION (TYPICAL)
PERIMETER WALL AND PILASTER

NOTES:

1. ALL EXPOSED SURFACES OF WALL (MASONRY BLOCK) SHALL BE COVERED WITH STONE VENEER.
2. MASONRY BLOCK WALL SHALL CONFORM TO STANDARD PLANS B 15-1 AND B 15-2, CASE 1 AND SPREAD FOOTING SHALL BE W=4'-0".
3. MONUMENT PLAQUE TO BE LOCATED AS SHOWN ON PLAN (SEE SHEET LD-2).

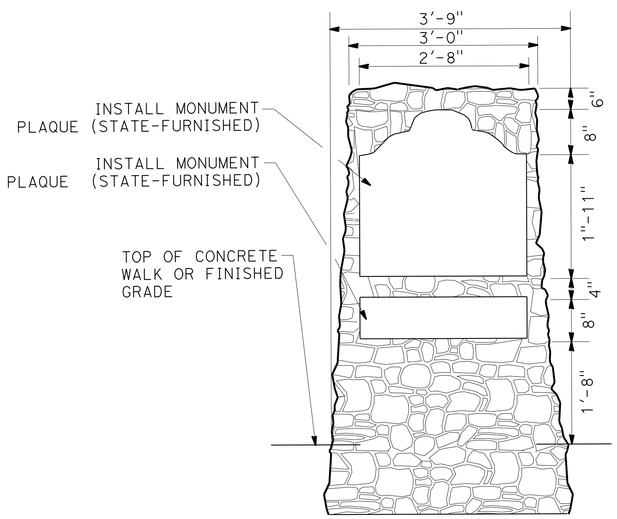

PILASTER WITH MONUMENT PLAQUE ELEVATION (TYPICAL)

NO SCALE

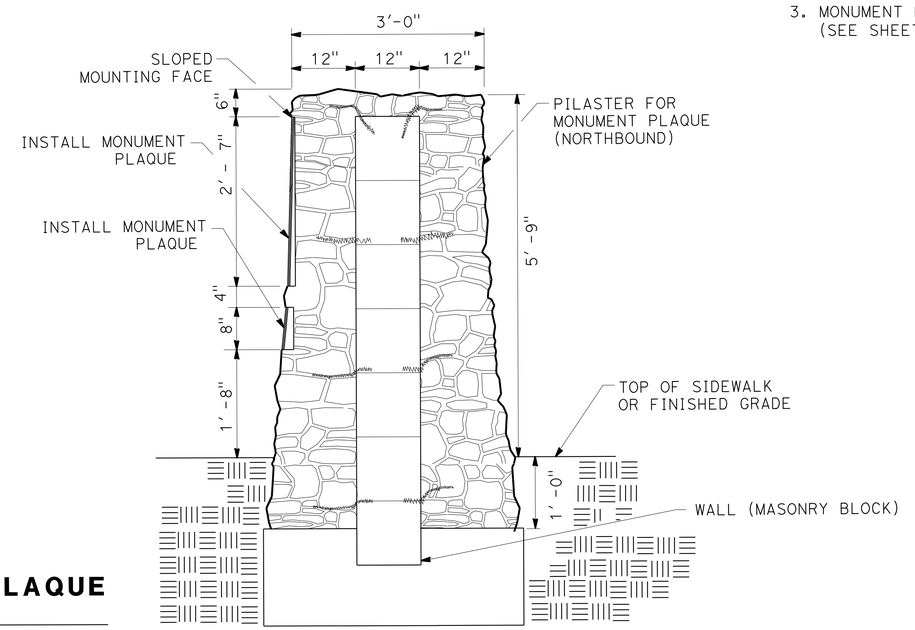

PILASTER WITH MONUMENT PLAQUE SECTION

NO SCALE

LANDSCAPE DETAILS

NO SCALE **LD-11**

STATE OF CALIFORNIA - DEPARTMENT OF TRANSPORTATION
Caltrans® LANDSCAPE DESIGN

SENIOR LANDSCAPE ARCHITECT: BYRON STROUT

CALCULATED-DESIGNED BY: R. BAZZA
CHECKED BY: J. STANTON
REVISED BY
DATE REVISED

LAST REVISION 08-19-13
DATE PLOTTED => 18-SEP-2013
TIME PLOTTED => 11:22

Dist	COUNTY	ROUTE	POST MILES TOTAL PROJECT	SHEET No.	TOTAL SHEETS
03, 08	Sac, SBd	5, 15	23.3, R107.3	42	330

John A Stanton
LICENSED LANDSCAPE ARCHITECT

9-16-13
PLANS APPROVAL DATE

LICENSED LANDSCAPE ARCHITECT JOHN A. STANTON No. 3485 Signature 03-31-14 Renewal Date 08-19-13 Date STATE OF CALIFORNIA

THE STATE OF CALIFORNIA OR ITS OFFICERS OR AGENTS SHALL NOT BE RESPONSIBLE FOR THE ACCURACY OR COMPLETENESS OF SCANNED COPIES OF THIS PLAN SHEET.

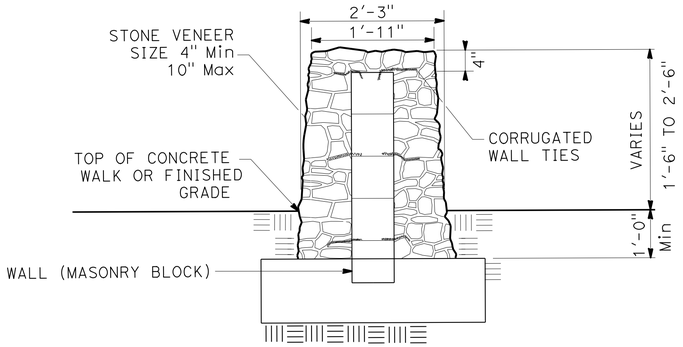

PERIMETER WALL

NO SCALE

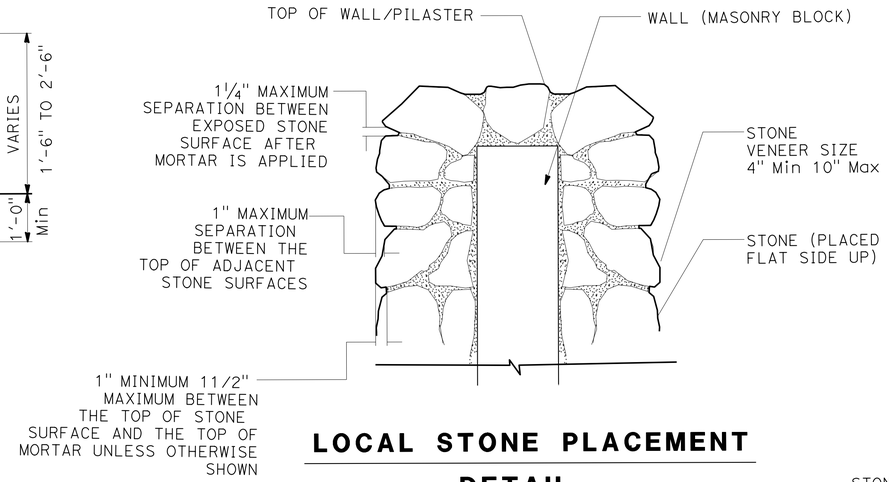

LOCAL STONE PLACEMENT DETAIL

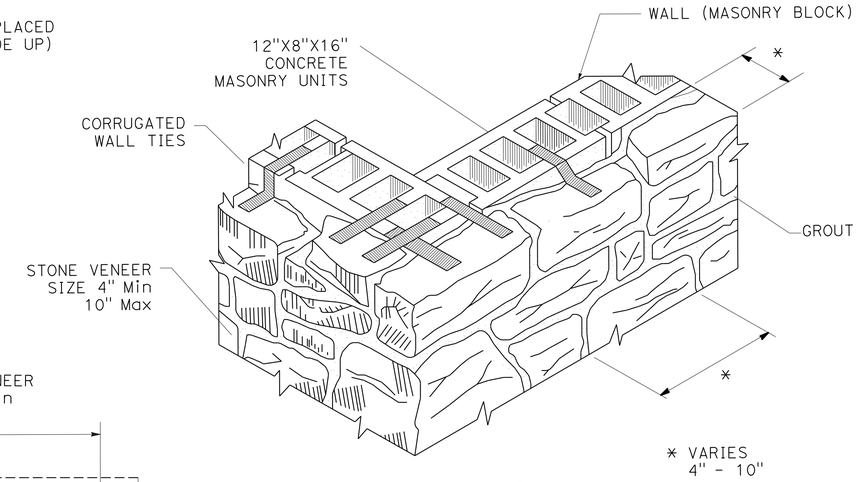

STONE VENEER FOR PERIMETER WALL DETAIL

NOTES:

1. ALL TIES MUST BE NON-CORROSIVE AND LOCATED 16" APART AT ALL CORNER USE EXTRA TIES AS SHOWN IN DETAIL ABOVE.
2. ALL EXPOSED SURFACES OF WALL (MASONRY BLOCK) SHALL BE COVERED WITH STONE VENEER.
3. WALL (MASONRY BLOCK) SHALL CONFORM TO STANDARD PLANS B 15-1 AND B 15-2, CASE 1 AND SPREAD FOOTING SHALL BE W=4'-0".

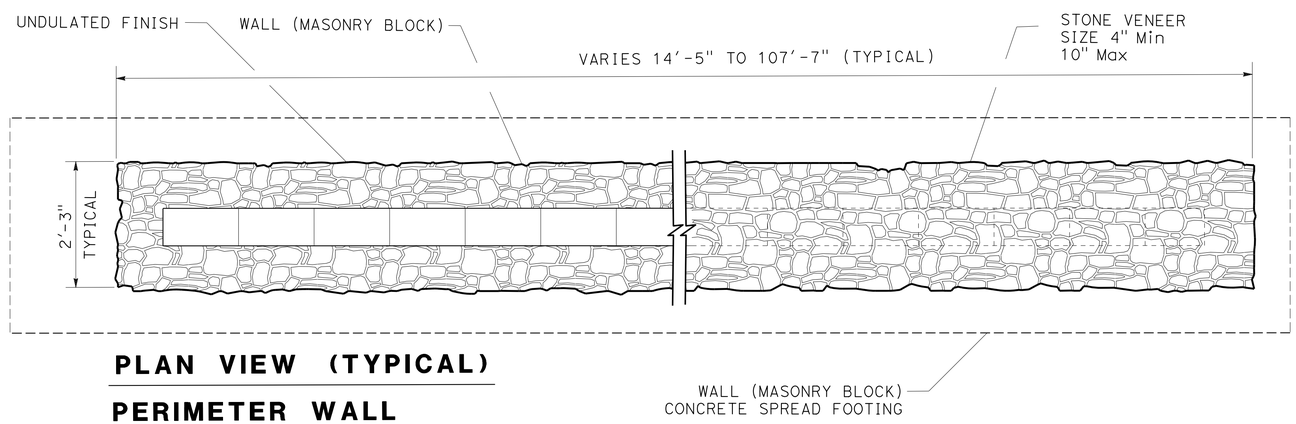

PLAN VIEW (TYPICAL)

PERIMETER WALL

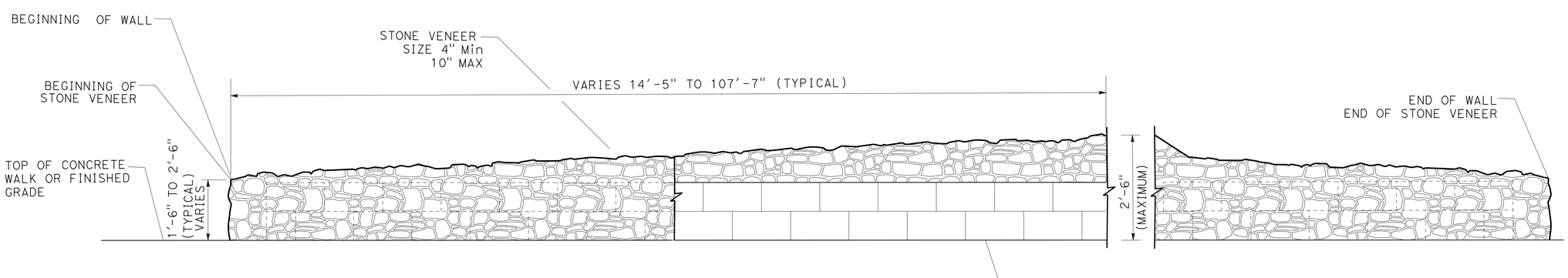

ELEVATION (TYPICAL)

PERIMETER WALL

LANDSCAPE DETAILS

NO SCALE **LD-12**

STATE OF CALIFORNIA - DEPARTMENT OF TRANSPORTATION
Caltrans® LANDSCAPE DESIGN
SENIOR LANDSCAPE ARCHITECT: BYRON STROUT
CALCULATED-DESIGNED BY: J. STANTON
CHECKED BY: R. BAZZA
REVISED BY
DATE REVISED

LAST REVISION 08-19-13
DATE PLOTTED => 18-SEP-2013
TIME PLOTTED => 11:22

Dist	COUNTY	ROUTE	POST MILES TOTAL PROJECT	SHEET No.	TOTAL SHEETS
03, 08	Sac, SBd	5, 15	23.3, R107.3	43	330

John of Stanton
LICENSED LANDSCAPE ARCHITECT

9-16-13
PLANS APPROVAL DATE

LICENSED LANDSCAPE ARCHITECT JOHN A. STANTON No. 3485 Signature 03-31-14 Renewal Date 08-19-13 Date STATE OF CALIFORNIA

THE STATE OF CALIFORNIA OR ITS OFFICERS OR AGENTS SHALL NOT BE RESPONSIBLE FOR THE ACCURACY OR COMPLETENESS OF SCANNED COPIES OF THIS PLAN SHEET.

NOTE:

WALL (MASONRY BLOCK) SHALL CONFORM TO STANDARD PLANS B 15-1 AND B 15-2, CASE 1 AND SPREAD FOOTING SHALL BE W=4'-0"

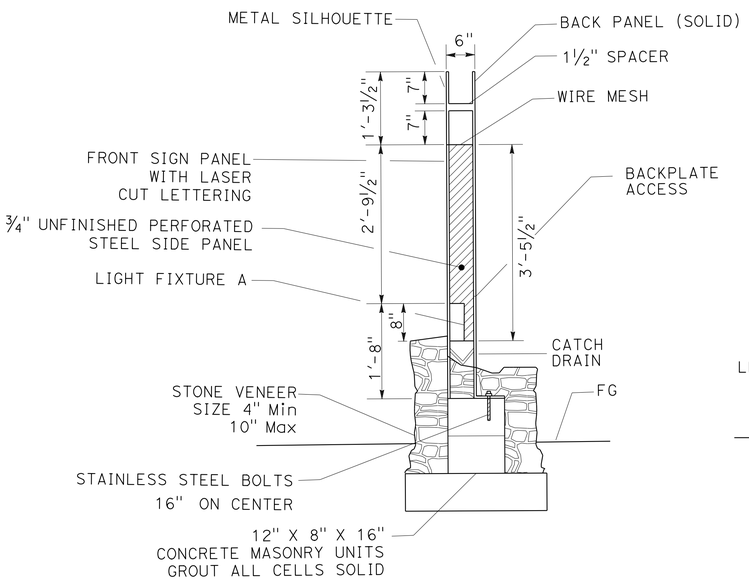

SECTION WALL 'M'
ENTRY MONUMENT SIGN

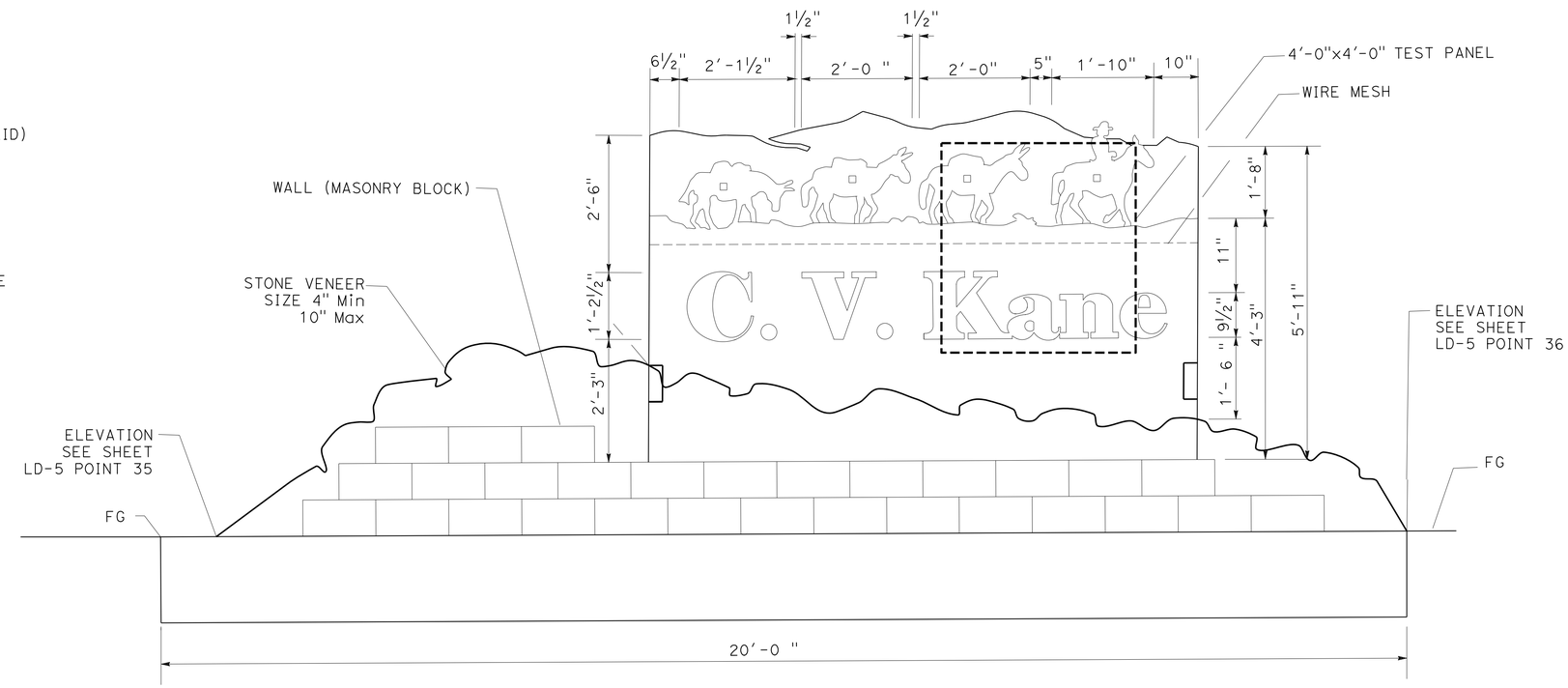

ELEVATION WALL 'M'
ENTRY MONUMENT SIGN

LANDSCAPE DETAILS

NO SCALE **LD-13**

STATE OF CALIFORNIA - DEPARTMENT OF TRANSPORTATION
Caltrans® LANDSCAPE DESIGN
SENIOR LANDSCAPE ARCHITECT BYRON STROUT
CALCULATED- DESIGNED BY R. BAZZA
CHECKED BY J. STANTON
REVISED BY
DATE REVISED

LAST REVISION 08-19-13
DATE PLOTTED => 18-SEP-2013
TIME PLOTTED => 11:34

Dist	COUNTY	ROUTE	POST MILES TOTAL PROJECT	SHEET No.	TOTAL SHEETS
03, 08	Sac, SBd	5, 15	23.3, R107.3	44	330

John A Stanton
LICENSED LANDSCAPE ARCHITECT

9-16-13
PLANS APPROVAL DATE

LICENSED LANDSCAPE ARCHITECT JOHN A. STANTON No. 3485 STATE OF CALIFORNIA
Signature 03-31-14 Renewal Date 08-19-13 Date

THE STATE OF CALIFORNIA OR ITS OFFICERS OR AGENTS SHALL NOT BE RESPONSIBLE FOR THE ACCURACY OR COMPLETENESS OF SCANNED COPIES OF THIS PLAN SHEET.

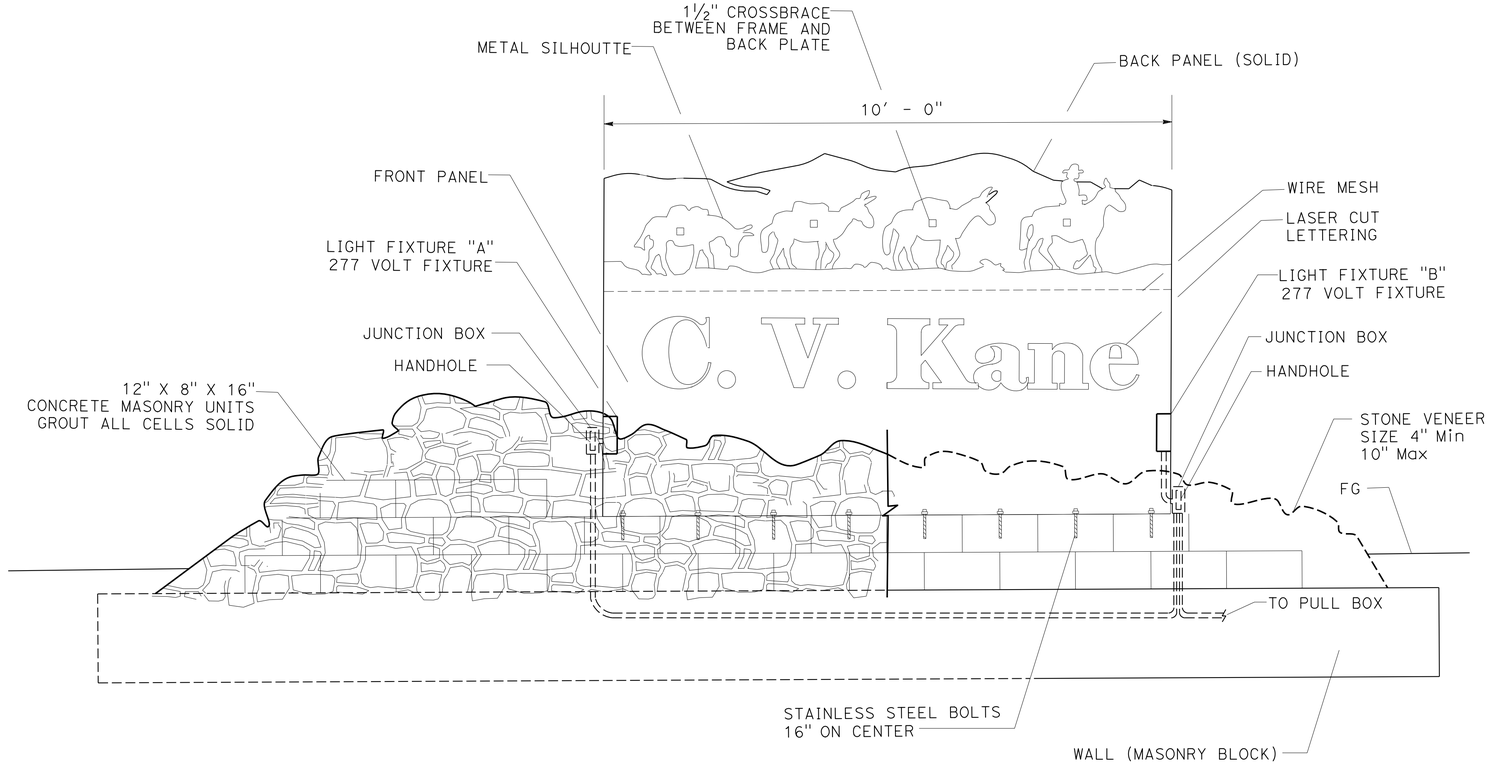

ELEVATION (TYPICAL)
ENTRY MONUMENT SIGN WITH STONE VENEER WALL 'M'

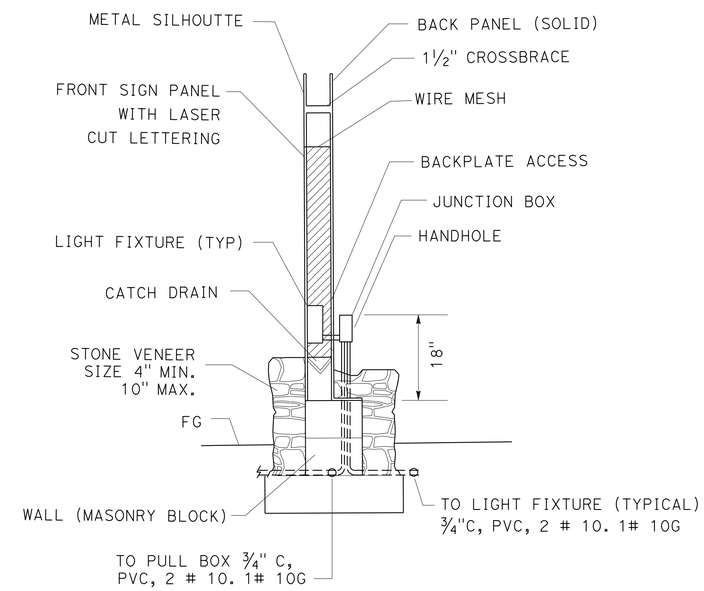

ELECTRICAL SCHEMATIC (TYP)
ENTRY MONUMENT SIGN

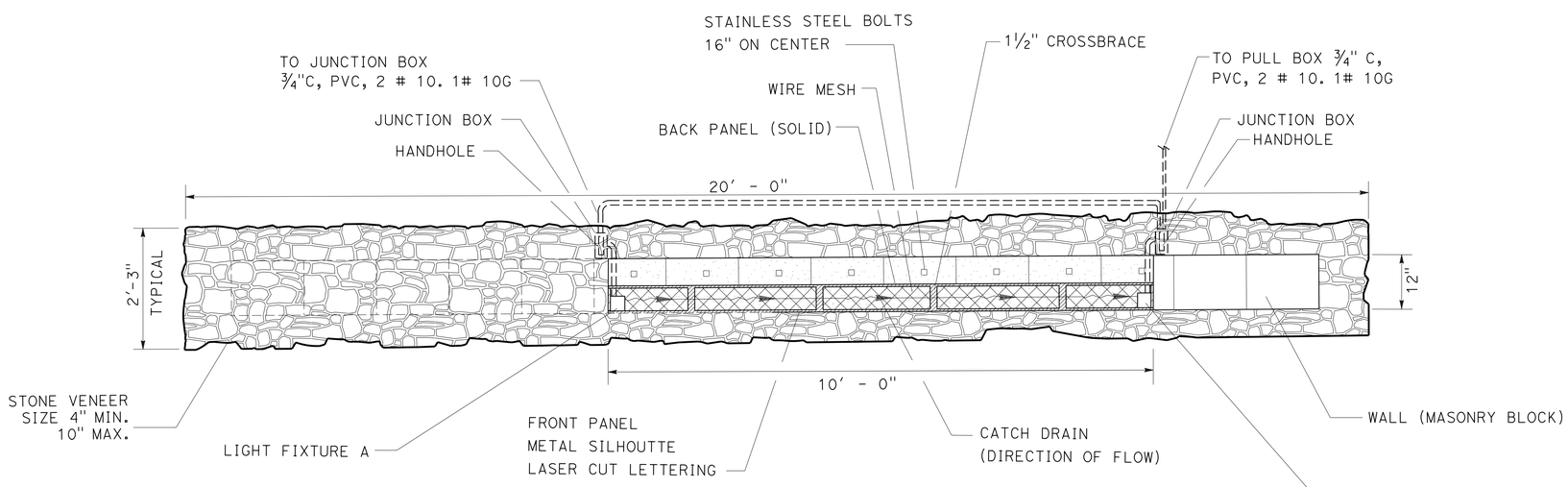

PLAN VIEW (TYPICAL)
ENTRY MONUMENT SIGN WITH STONE VENEER WALL 'M'

NOTE:

WALL (MASONRY BLOCK) SHALL CONFORM TO STANDARD PLANS B 15-1 AND B 15-2, CASE 1 AND SPREAD FOOTING SHALL BE W=4'-0"

ALL DIMENSIONS ARE IN INCHES UNLESS OTHERWISE SHOWN

LANDSCAPE DETAILS

NO SCALE **LD-14**

REVISED BY	DATE REVISED
R. BAZZA	J. STANTON

CALCULATED-DESIGNED BY
CHECKED BY

SENIOR LANDSCAPE ARCHITECT
BYRON STROUT

STATE OF CALIFORNIA - DEPARTMENT OF TRANSPORTATION
Caltrans® LANDSCAPE DESIGN

LAST REVISION 08-19-13
DATE PLOTTED => 18-SEP-2013
TIME PLOTTED => 11:23

DIST	COUNTY	ROUTE	POST MILES TOTAL PROJECT	SHEET NO.	TOTAL SHEETS
03, 08	Sac, SBd	5, 15	23.3, R107.3	45	330

REGISTERED CIVIL ENGINEER

April 20, 2012
PLANS APPROVAL DATE

REGISTERED PROFESSIONAL ENGINEER
Roberta L. McLaughlin
No. C40375
Exp. 3-31-13
CIVIL
STATE OF CALIFORNIA

The State of California or its officers or agents shall not be responsible for the accuracy or completeness of electronic copies of this plan sheet.

To accompany plans dated 9-16-13

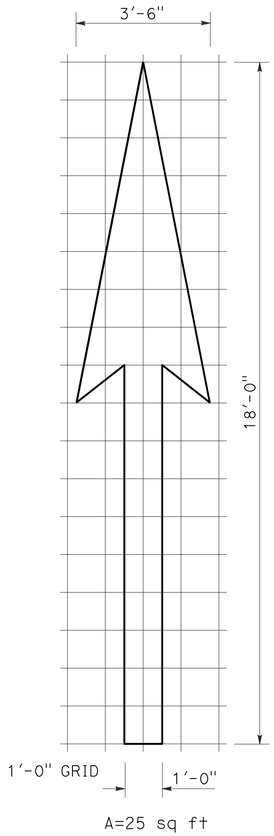

A=25 sq ft

TYPE I 18'-0" ARROW

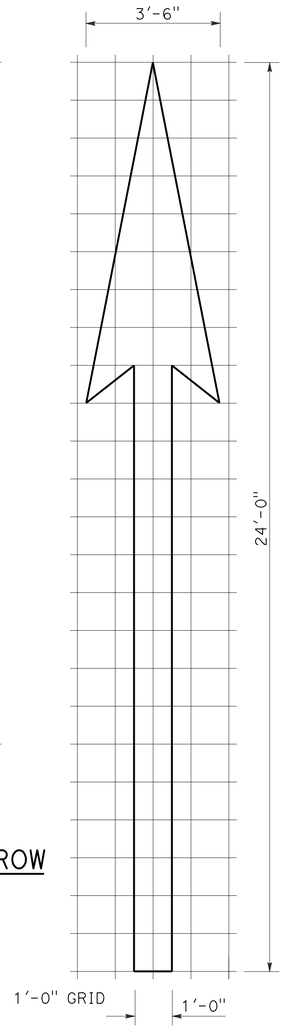

A=31 sq ft

TYPE I 24'-0" ARROW

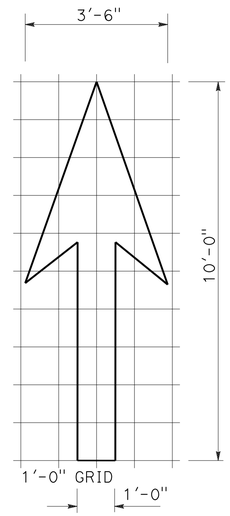

A=14 sq ft

TYPE I 10'-0" ARROW

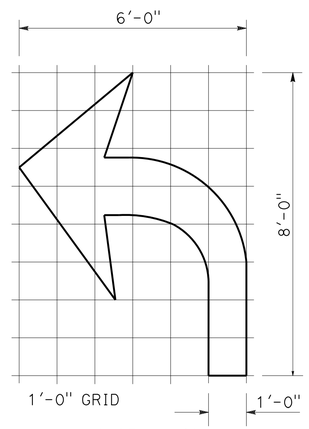

A=15 sq ft

TYPE IV (L) ARROW

(FOR TYPE IV (R) ARROW, USE MIRROR IMAGE)

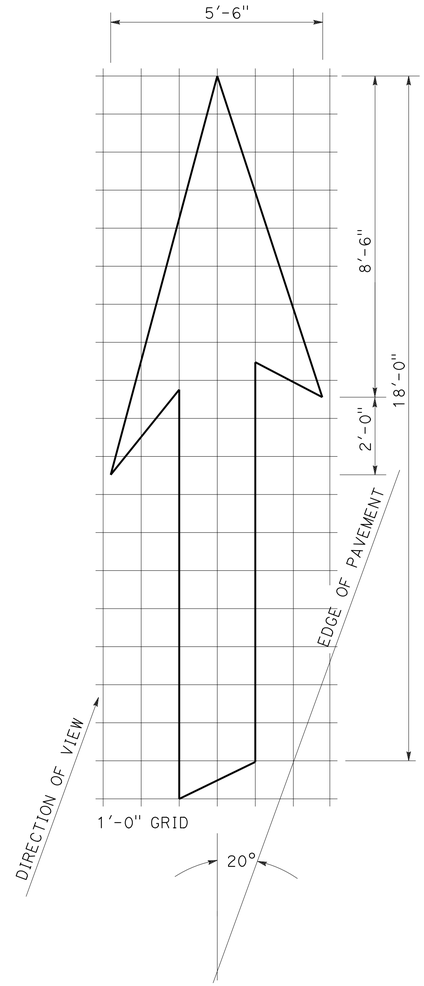

A=42 sq ft

TYPE VI ARROW

RIGHT LANE DROP ARROW (FOR LEFT LANE, USE MIRROR IMAGE)

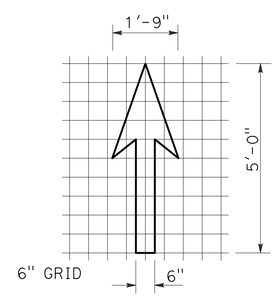

A=3.5 sq ft

BIKE LANE ARROW

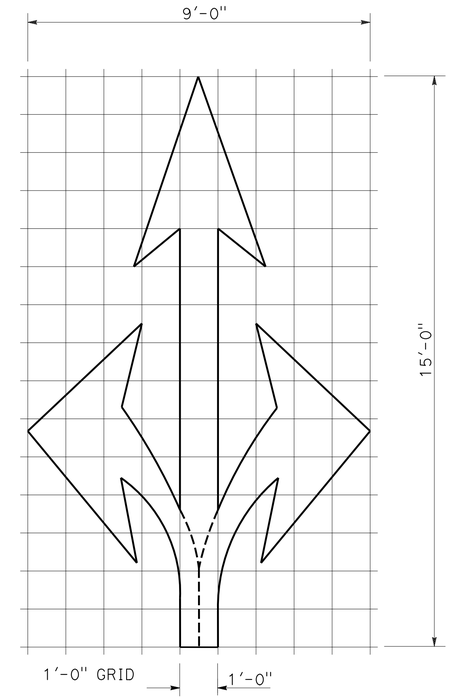

A=36 sq ft

TYPE VIII ARROW

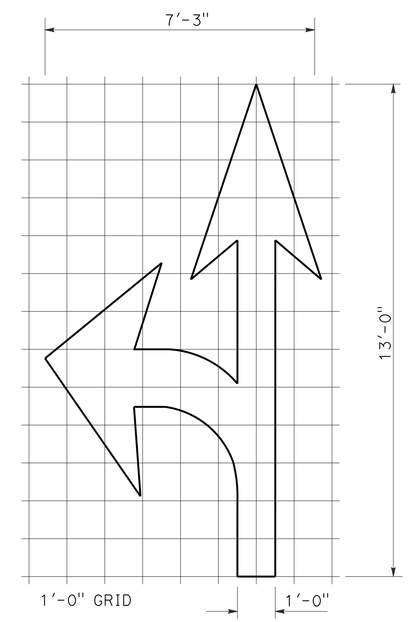

A=27 sq ft

TYPE VII (L) ARROW

(FOR TYPE VII (R) ARROW, USE MIRROR IMAGE)

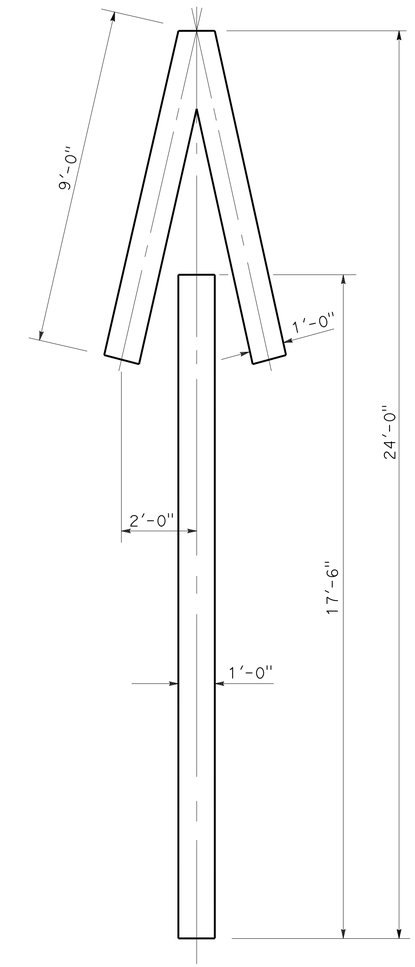

A=33 sq ft

TYPE V ARROW

NOTE:

MINOR VARIATIONS IN DIMENSIONS MAY BE ACCEPTED BY THE ENGINEER.

STATE OF CALIFORNIA
DEPARTMENT OF TRANSPORTATION

PAVEMENT MARKINGS ARROWS

NO SCALE

RSP A24A DATED APRIL 20, 2012 SUPERSEDES STANDARD PLAN A24A DATED MAY 1, 2006 - PAGE 9 OF THE STANDARD PLANS BOOK DATED MAY 2006.

REVISED STANDARD PLAN RSP A24A

2006 REVISED STANDARD PLAN RSP A24A

3-14-12

DIST	COUNTY	ROUTE	POST MILES TOTAL PROJECT	SHEET NO.	TOTAL SHEETS
03, 08	Sac, SBd	5, 15	23.3, R107.3	46	330

REGISTERED CIVIL ENGINEER

June 6, 2008
PLANS APPROVAL DATE

REGISTERED PROFESSIONAL ENGINEER
Donald E. Howe
No. C46402
Exp. 3-31-09
CIVIL
STATE OF CALIFORNIA

The State of California or its officers or agents shall not be responsible for the accuracy or completeness of electronic copies of this plan sheet.

To accompany plans dated 9-16-13

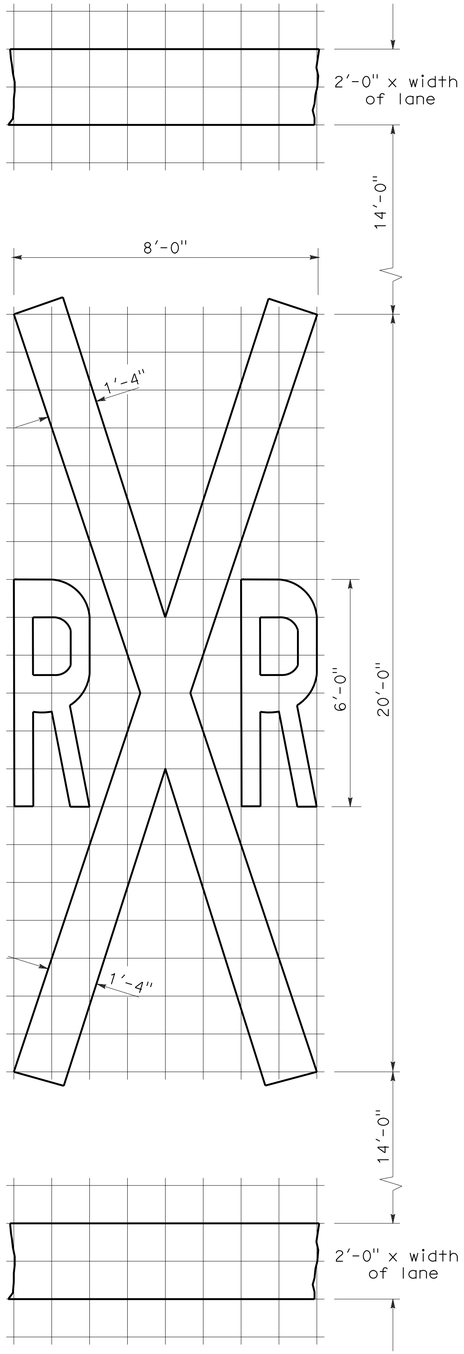

RAILROAD CROSSING SYMBOL

✳70 sq ft DOES NOT INCLUDE THE 2'-0" x VARIABLE WIDTH TRANSVERSE LINES.

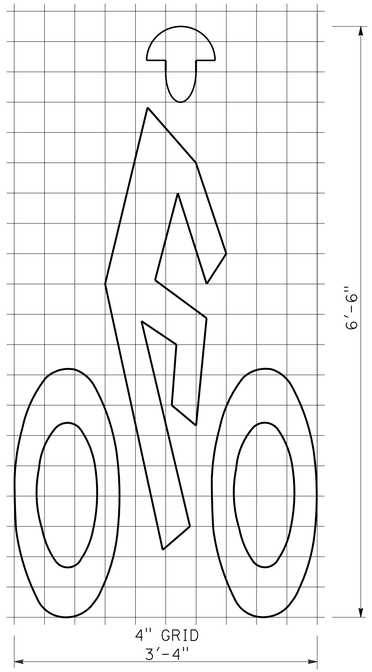

BIKE LANE SYMBOL

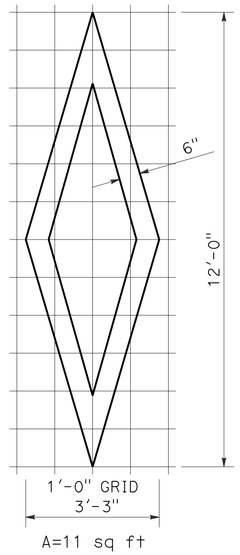

DIAMOND SYMBOL

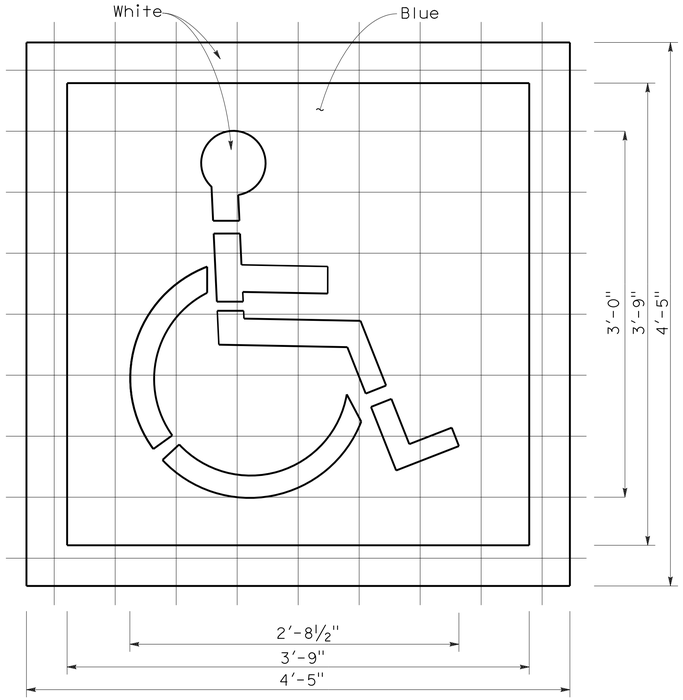

INTERNATIONAL SYMBOL OF ACCESSIBILITY MARKING

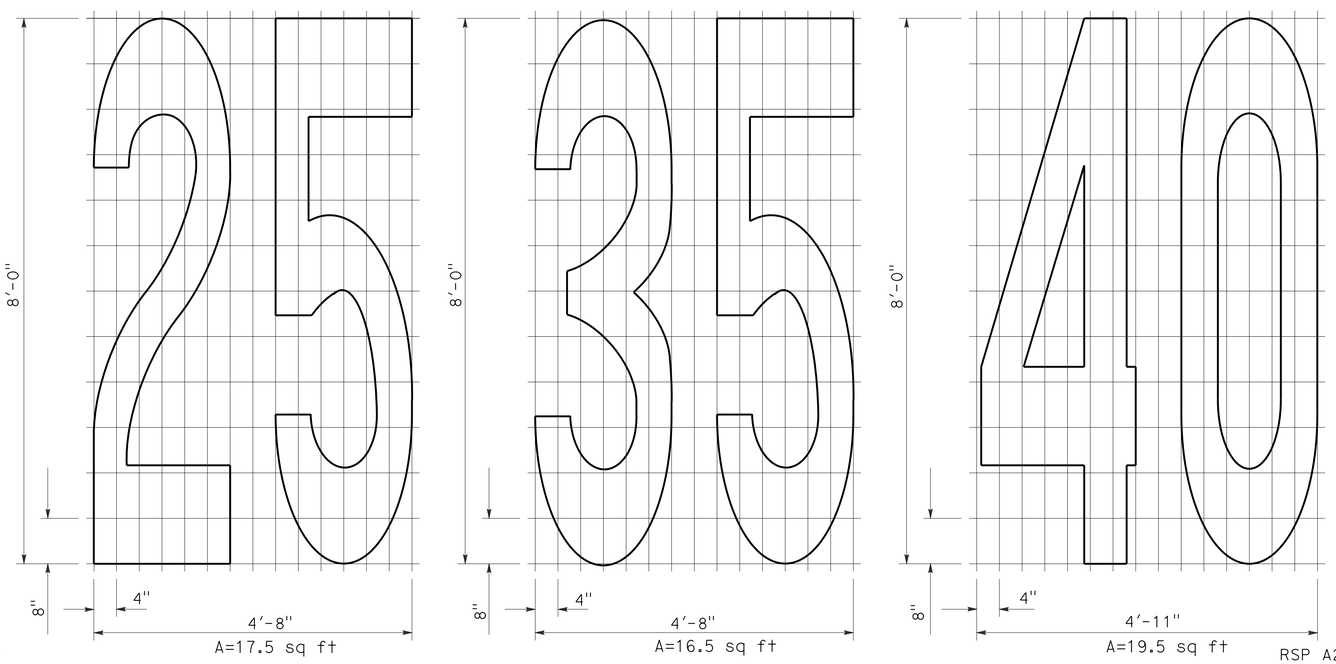

NUMERALS

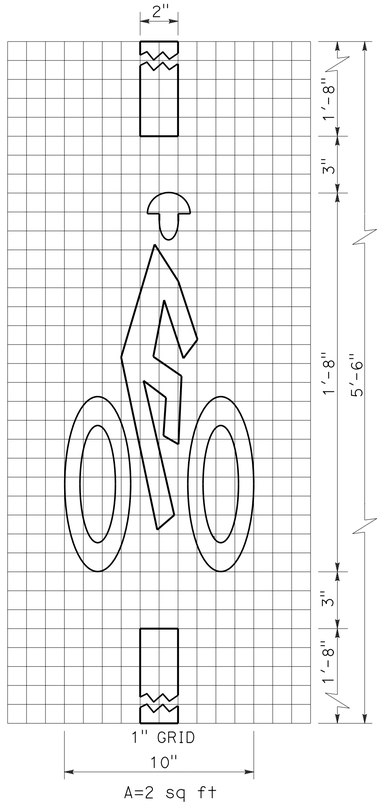

BICYCLE LOOP DETECTOR SYMBOL

NOTE:

1. Minor variations in dimensions may be accepted by the Engineer.

STATE OF CALIFORNIA
DEPARTMENT OF TRANSPORTATION

PAVEMENT MARKINGS SYMBOLS AND NUMERALS

NO SCALE

RSP A24C DATED JUNE 6, 2008 SUPERSEDES STANDARD PLAN A24C DATED MAY 1, 2006 - PAGE 11 OF THE STANDARD PLANS BOOK DATED MAY 2006.

REVISED STANDARD PLAN RSP A24C

2006 REVISED STANDARD PLAN RSP A24C

5-27-08

DIST	COUNTY	ROUTE	POST MILES TOTAL PROJECT	SHEET NO.	TOTAL SHEETS
03, 08	Sac, SBd	5, 15	23.3, R107.3	47	330

REGISTERED CIVIL ENGINEER

July 20, 2012
PLANS APPROVAL DATE

REGISTERED PROFESSIONAL ENGINEER
Roberta L. McLaughlin
No. C40375
Exp. 3-31-13
CIVIL
STATE OF CALIFORNIA

The State of California or its officers or agents shall not be responsible for the accuracy or completeness of electronic copies of this plan sheet.

To accompany plans dated 9-16-13

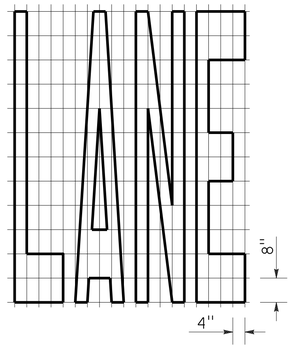

A=24 ft²

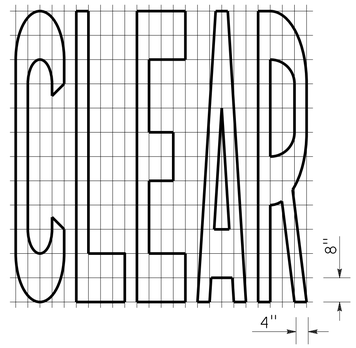

A=27 ft²

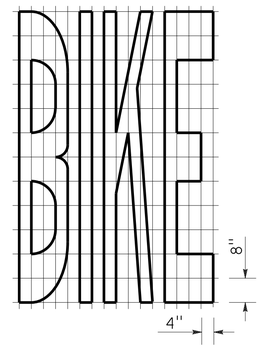

A=21 ft²

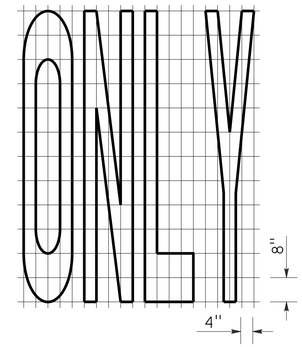

A=22 ft²

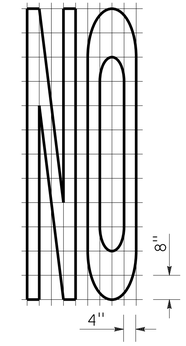

A=14 ft²

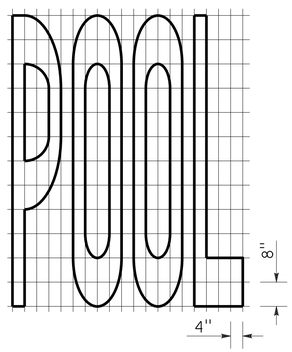

A=23 ft²

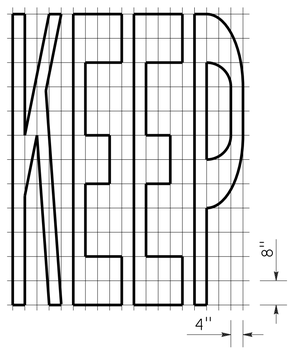

A=24 ft²

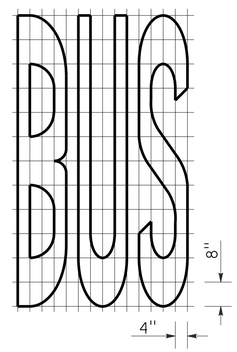

A=20 ft²

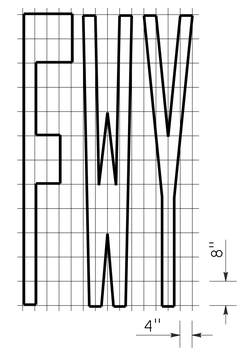

A=16 ft²

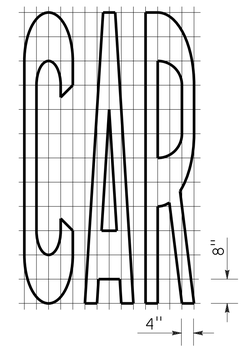

A=17 ft²

WORD MARKINGS			
ITEM	ft²	ITEM	ft²
LANE	24	NO	14
POOL	23	BIKE	21
CAR	17	BUS	20
CLEAR	27	ONLY	22
KEEP	24	FWY	16

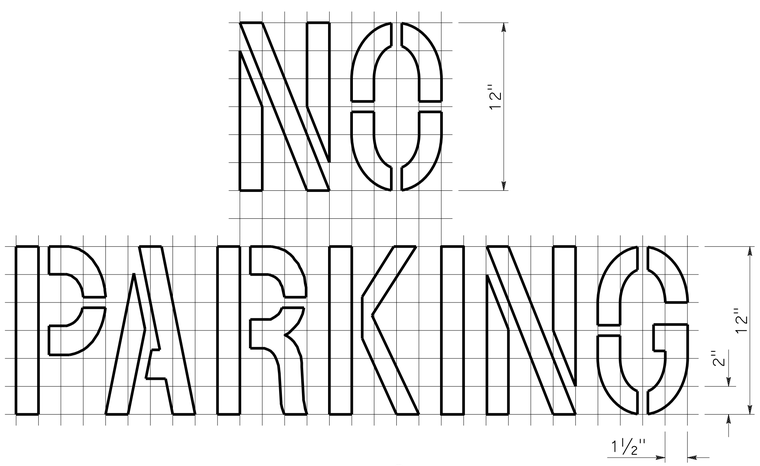

A=2 ft²

See Notes 6 and 7

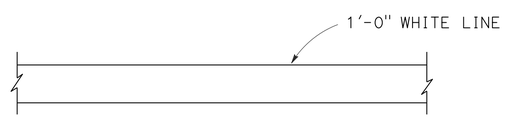

LIMIT LINE (STOP LINE)

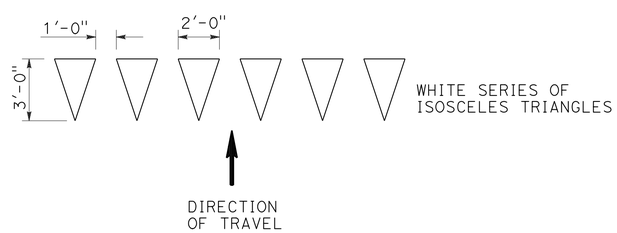

YIELD LINE

1. If a message consists of more than one word, it should read "UP", i.e., the first word should be nearest the driver.
2. The space between words should be at least four times the height of the characters for low speed roads, but not more than ten times the height of the characters. The space may be reduced appropriately where there is limited space because of local conditions.
3. Minor variations in dimensions may be accepted by the Engineer.
4. Portions of a letter, number or symbol may be separated by connecting segments not to exceed 2" in width.
5. The words "NO PARKING" pavement marking is to be used for parking facilities. For typical locations of markings, see Standard Plans A90A and A90B.
6. The words "NO PARKING", shall be painted in white letters no less than 1'-0" high on a contrasting background and located so that it is visible to traffic enforcement officials.

STATE OF CALIFORNIA
DEPARTMENT OF TRANSPORTATION

PAVEMENT MARKINGS WORDS, LIMIT AND YIELD LINES

NO SCALE

RSP A24E DATED JULY 20, 2012 SUPERSEDES STANDARD PLAN A24E
DATED MAY 1, 2006 - PAGE 13 OF THE STANDARD PLANS BOOK DATED MAY 2006.

REVISED STANDARD PLAN RSP A24E

2006 REVISED STANDARD PLAN RSP A24E

6-12-12

DIST	COUNTY	ROUTE	POST MILES TOTAL PROJECT	SHEET NO.	TOTAL SHEETS
03, 08	Sac, SBd	5, 15	23.3, R107.3	48	330

REGISTERED CIVIL ENGINEER

November 17, 2006
PLANS APPROVAL DATE

REGISTERED PROFESSIONAL ENGINEER Dallas Forester No. C37765 Exp. 12-31-06 CIVIL STATE OF CALIFORNIA

The State of California or its officers or agents shall not be responsible for the accuracy or completeness of electronic copies of this plan sheet.

To accompany plans dated 9-16-13

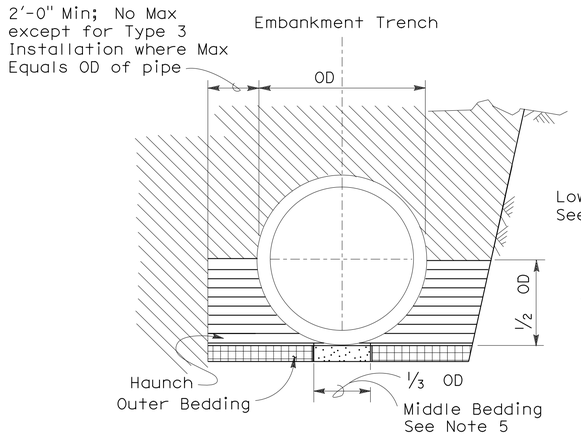

BACKFILL

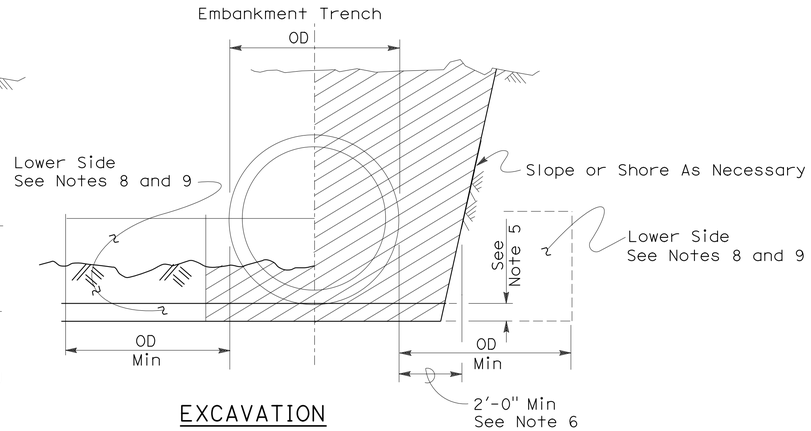

EXCAVATION

Roadway Embankment

Structure Backfill (Culvert) See Note 6

Structure Backfill (Culvert) See Note 6

Loose Backfill

Excavation Structure (Culvert)

TYPE 1 INSTALLATION:

The haunch and outer bedding shall be compacted to a minimum 90 percent relative compaction. In addition, the minimum sand equivalent in these areas shall be 30 and the maximum percentage passing the 75 μm sieve size shall be 12.

TYPE 2 INSTALLATION:

The haunch and outer bedding shall be compacted to a minimum 90 percent relative compaction. In addition, the minimum sand equivalent in these areas shall be 25.

TYPE 3 INSTALLATION:

The haunch and outer bedding shall be compacted to a minimum 85 percent relative compaction. 90 percent relative compaction will be required where the fill over the pipe is less than 4'-0" or 1/2 OD.

NOTES:

1. Unless otherwise shown on the plans or specified in the special provision, the Contractor shall have the option of selecting the class of RCP and the type of installation to be used, provided the height of cover does not exceed the value shown for the RCP selected.
   Example: 24" RCP culvert with maximum cover of 19'-0" the options are:
   a) Class III or stronger with Installation Type 1.
   b) Class III Special or stronger with Installation Type 2.
   c) Class IV Special or stronger with Installation Type 3.
   Cover is defined as the maximum vertical distance from top of the pipe to finished grade within the length of any given culvert.
2. The class of RCP and Installation Type selected shall be the same throughout the length of any given culvert.
3. The "length of any culvert" is defined as the culvert between:
   a) Successive drainage structure (inlets, junction boxes, headwalls, etc.).
   b) A drainage structure and the inlet or outlet end of the culvert.
   c) The inlet and outlet end of the culvert when there are no intervening drainage structures.
4. Oval and arch shaped RCP shall not be used.
5. 1/25 OD Min, not less than 3".
6. Slurry cement backfill may be substituted for backfill in the outer bedding and haunch areas. If slurry is used the outer and middle beddings shall be omitted. Prior to installation the soil under the middle 1/3 of the outside diameter of the pipe shall be softened by scarifying or other means to a minimum depth of 1/25 OD, but not less than 3". Where slurry cement backfill is used clear distance to trench wall may be reduced as set forth in Section 19-3.062 of the Standard Specifications.
7. Backfill shall be placed full width of excavation except where dimensions are shown for backfill width or thickness. Dimensions shown are minimums.
8. Lower side shall be suitable material as determined by the Engineer. Otherwise it shall be considered unsuitable as set forth in Section 19-2.02 of the Standard Specifications. See Note 9.
9. Where the pipe is placed in a trench, if the trench walls are sloped at 5 vertical to 1 horizontal or steeper for at least 90 percent of the trench height or up to not less than 12" from the grading plane, the firmness of the soil in the lower side need not be considered.
10. Non-reinforced precast concrete pipe sizes 3'-0" or smaller may be placed under installation Types 1, 2 or 3.

INSTALLATION TYPE 1

MINIMUM CLASS AND D-LOAD	COVER	
	108" Dia AND SMALLER	OVER 108" Dia
Class II 1000D	14.9'	12.9'
Class III 1350D	15.0' - 20.9'	13.0' - 18.9'
Class III Special 1700D	21.0' - 26.9'	19.0' - 24.9'
Class IV 2000D	27.0' - 31.9'	25.0' - 29.9'
Class IV Special 2500D	32.0' - 40.9'	30.0' - 38.9'
Class V 3000D	41.0' - 49.9'	39.0' - 46.9'
Class V Special 3600D	50.0' - 59.0'	47.0' - 58.0'

INSTALLATION TYPE 2

MINIMUM CLASS AND D-LOAD	COVER
Class II 1000D	9.9'
Class III 1350D	10.0'- 14.9'
Class III Special 1700D	15.0' - 19.9'
Class IV 2000D	20.0' - 24.9'
Class IV Special 2500D	25.0' - 31.9'
Class V 3000D	32.0' - 38.9'
Class V Special 3600D	39.0' - 47.0'

INSTALLATION TYPE 3

MINIMUM CLASS AND D-LOAD	COVER	
	48" Dia AND SMALLER	OVER 48" Dia
Class II 1000D	7.9'	5.9'
Class III 1350D	8.0' - 10.9'	6.0' - 8.9'
Class III Special 1700D	11.0' - 14.9'	9.0' - 12.9'
Class IV 2000D	15.0' - 17.9'	13.0' - 15.9'
Class IV Special 2500D	18.0' - 21.9'	16.0' - 19.9'
Class V 3000D	22.0' - 26.9'	20.0' - 24.9'
Class V Special 3600D	30.0' - 33.0'	25.0' - 31.0'

STATE OF CALIFORNIA
DEPARTMENT OF TRANSPORTATION

EXCAVATION AND BACKFILL CONCRETE PIPE CULVERTS

NO SCALE

RSP A62DA DATED NOVEMBER 17, 2006 SUPERSEDES STANDARD PLAN A62DA DATED MAY 1, 2006 - PAGE 20 OF THE STANDARD PLANS BOOK DATED MAY 2006.

REVISED STANDARD PLAN RSP A62DA

2006 REVISED STANDARD PLAN RSP A62DA

10-26-06

DIST	COUNTY	ROUTE	POST MILES TOTAL PROJECT	SHEET NO.	TOTAL SHEETS
03, 08	Sac, SBd	5, 15	23.3, R107.3	49	330

REGISTERED CIVIL ENGINEER

June 5, 2009
PLANS APPROVAL DATE

REGISTERED PROFESSIONAL ENGINEER Glenn DeCou No. C34547 Exp. 9-30-09 CIVIL STATE OF CALIFORNIA

The State of California or its officers or agents shall not be responsible for the accuracy or completeness of electronic copies of this plan sheet.

To accompany plans dated 9-16-13

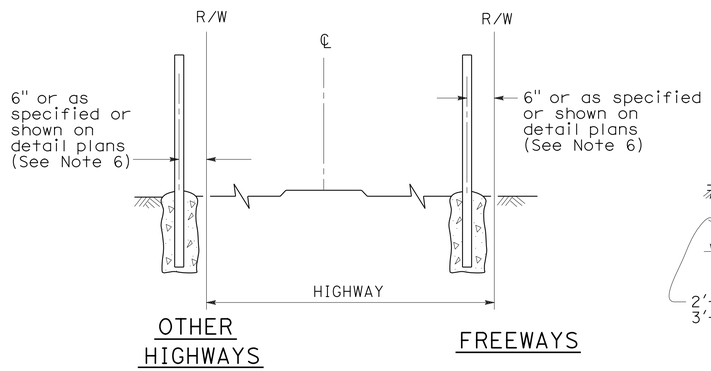

FENCE LOCATION

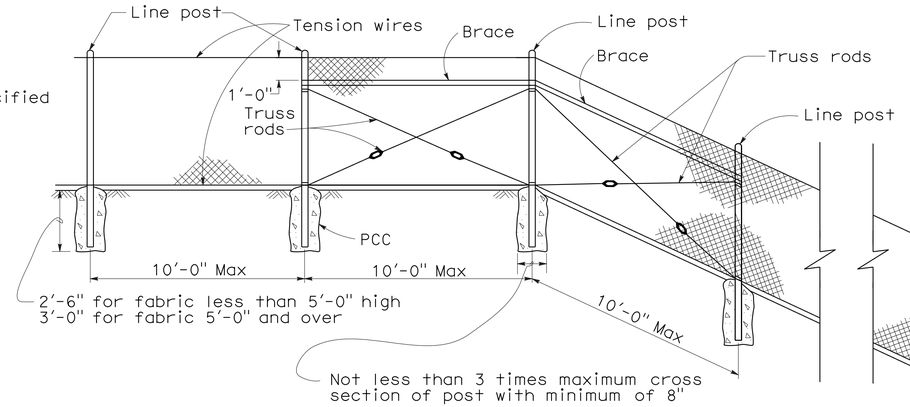

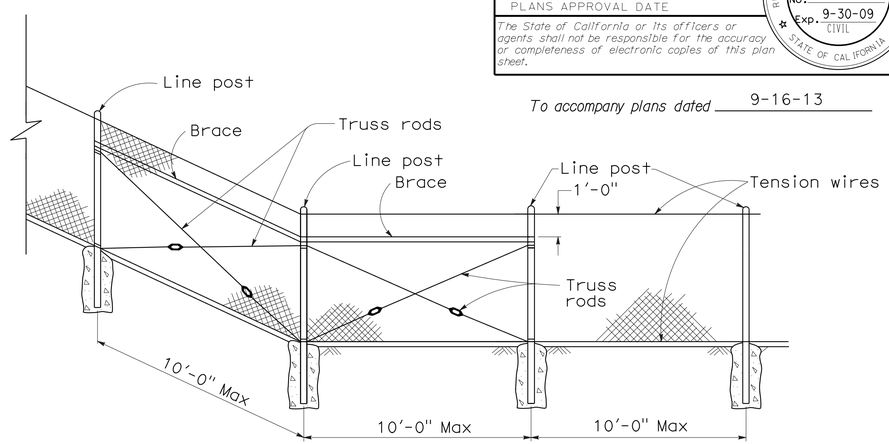

CHAIN LINK FENCE ON SHARP BREAK IN GRADE

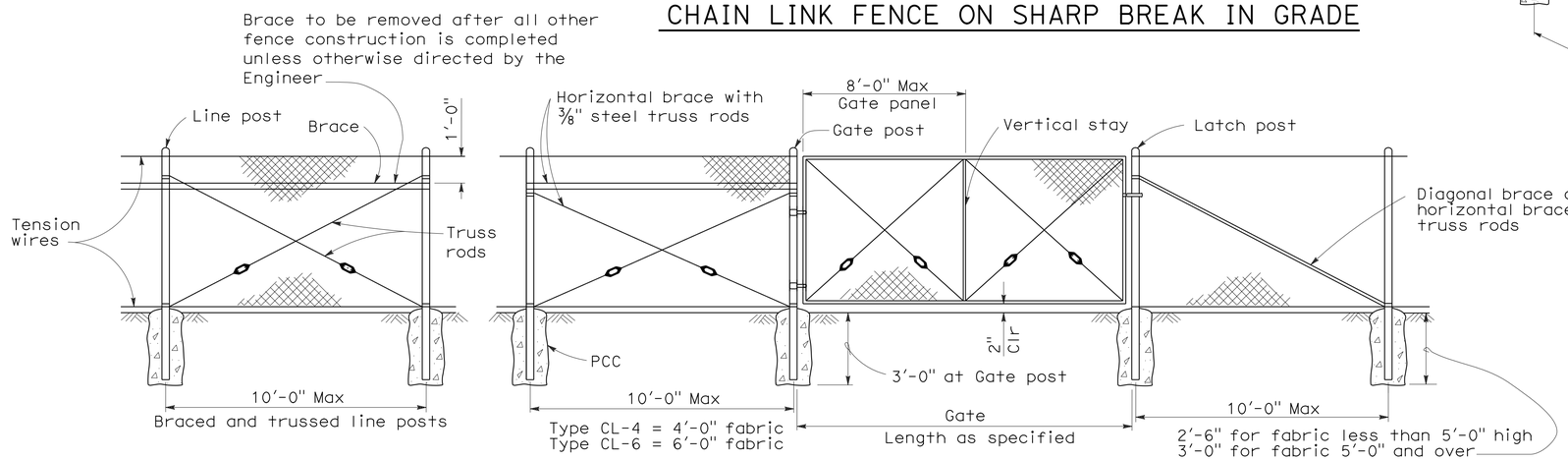

CHAIN LINK GATE INSTALLATION

GATE POST			
FENCE HEIGHT	GATE WIDTHS	NOMINAL ID	WEIGHT PER FOOT
6'-0" and Less	Up thru 6'-0"	2½"	4.95 LB
	Over 6'-0" thru 12'-0"	4"	10.79 LB
	Over 12'-0" thru 18'-0"	5"	14.62 LB
	Over 18'-0" to 24'-0" Max	6"	18.97 LB
Over 6'-0"	Up thru 6'-0"	3"	7.58 LB
	Over 6'-0" thru 12'-0"	5"	14.62 LB
	Over 12'-0" thru 18'-0"	6"	18.97 LB
	Over 18'-0" to 24'-0" Max	8"	28.55 LB

Above post dimensions and weights are minimums. Larger sizes may be used on approval of the Engineer.

NOTES:

1. The below table shows examples of post and brace sections which may comply with the Specifications.
2. Sections shown in the tables must also comply with the strength requirements and other provisions of the Specifications.
3. Other sections which comply with the strength requirements and other provisions of the Specifications may be used on approval of the Engineer.
4. Options exercised shall be uniform on any one project.
5. Dimensions shown are nominal.
6. Offset to be 2'-0" at monument locations, measured at right angles to R/W lines. Taper to achieve offset to be at least 20'-0" long.

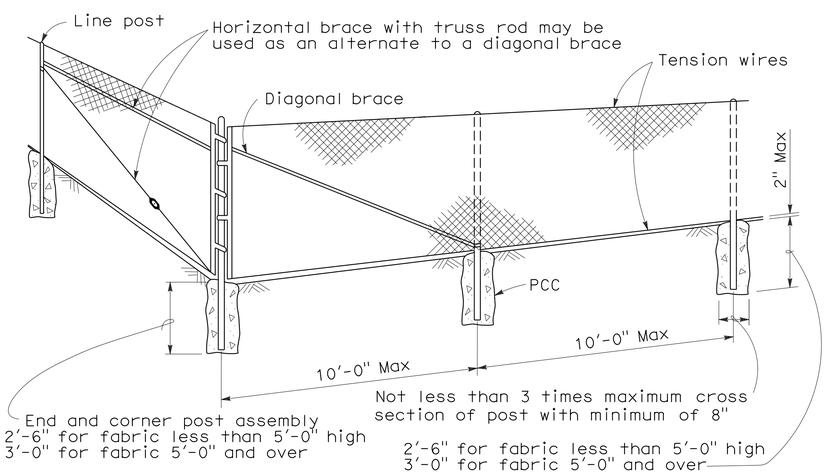

CORNER POST

TYPICAL MEMBER DIMENSIONS (See Notes)											
FENCE HEIGHT	LINE POSTS			END, LATCH & CORNER POSTS				BRACES			
	ROUND ID	H	ROLL FORMED	ROUND ID	ROLL FORMED			ROUND ID	H	ROLL FORMED	
6' & less	1½"	1⅞" × 1⅝"	1⅞" × 1⅝"	2"	3½" × 3½"	2" × 1¾"		1¼"	1½" × 1 5/16"	1⅝" × 1¼"	1¾" × 1¼"
Over 6'	2"	2¼" × 2"	2" × 1¾"	2½"	3½" × 3½"	2½" × 2½"		1¼"	1½" × 1 5/16"	1⅝" × 1¼"	1¾" × 1¼"

STATE OF CALIFORNIA
DEPARTMENT OF TRANSPORTATION

CHAIN LINK FENCE

NO SCALE

RSP A85 DATED JUNE 5, 2009 SUPERSEDES STANDARD PLAN A85
DATED MAY 1, 2006 - PAGE 111 OF THE STANDARD PLANS BOOK DATED MAY 2006.

REVISED STANDARD PLAN RSP A85

2006 REVISED STANDARD PLAN RSP A85

5-7-09

DIST	COUNTY	ROUTE	POST MILES TOTAL PROJECT	SHEET NO.	TOTAL SHEETS
03, 08	Sac, SBd	5, 15	23.3, R107.3	50	330

REGISTERED CIVIL ENGINEER

June 5, 2009
PLANS APPROVAL DATE

REGISTERED PROFESSIONAL ENGINEER Glenn DeCou No. C34547 Exp. 9-30-09 CIVIL STATE OF CALIFORNIA

The State of California or its officers or agents shall not be responsible for the accuracy or completeness of electronic copies of this plan sheet.

To accompany plans dated 9-16-13

NOTES:

1. H is 2'-6" for fabric less than 5'-0" high. H is 3'-0" for fabric 5'-0" and over.
2. T is not less than 3 times maximum cross section of post with minimum of 8".
3. Arms with barbed wire to be used where shown on plans.
4. See Revised Standard Plan RSP A85 for Chain Link Fencing dimensions.
5. Reinforcing must comply with ASTM A 706.
6. See Detail A on New Standard Plan NSP A86B for connection at headwall.

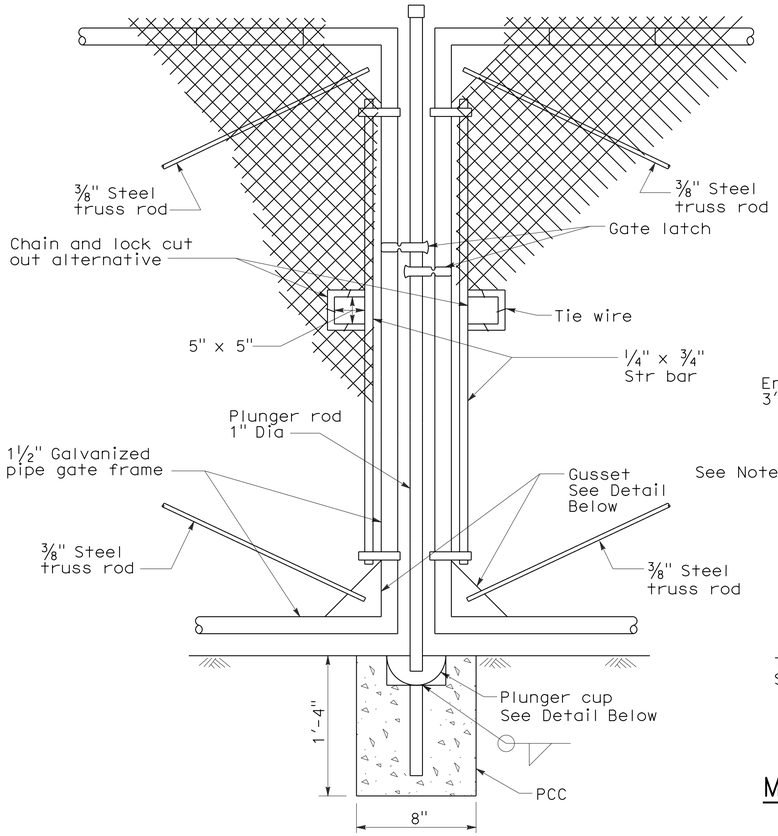

TYPICAL DOUBLE GATE REMOVABLE CENTER POST

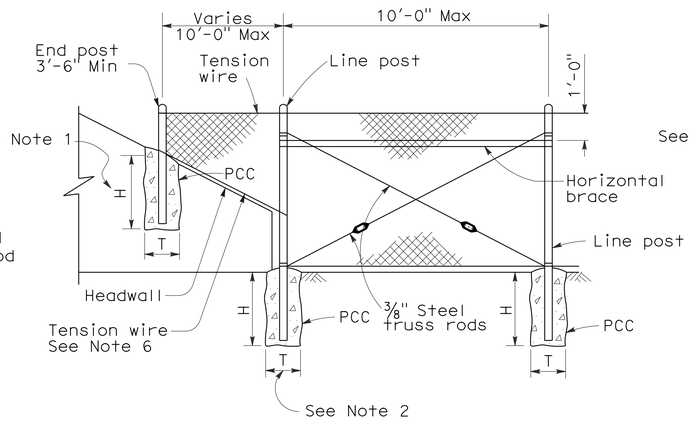

METHOD OF TYING FENCE TO HEADWALL

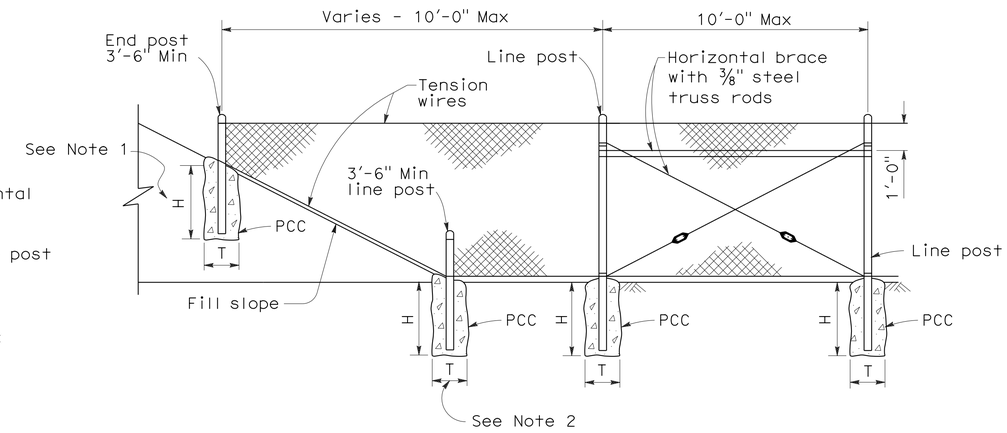

METHOD OF ERECTING FENCE FOR FILL SLOPE

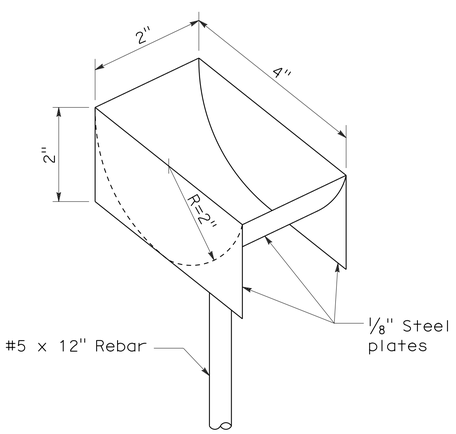

PLUNGER CUP DETAIL

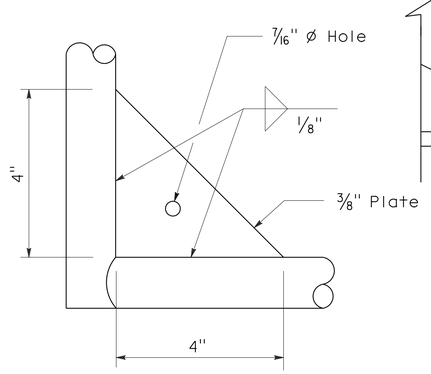

GUSSET DETAIL

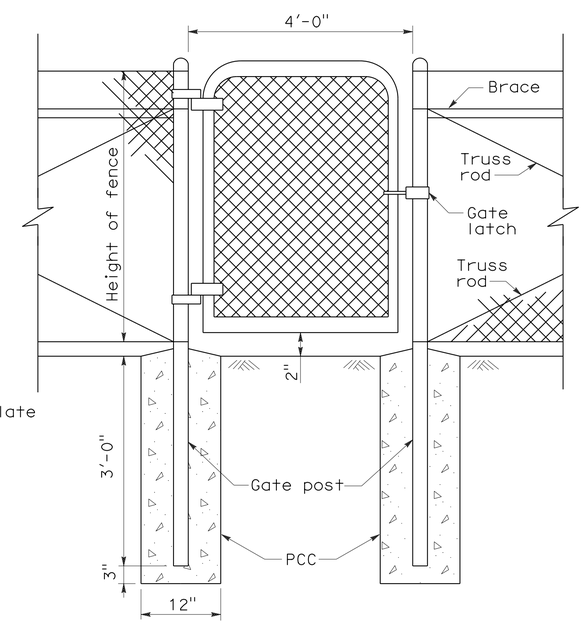

WALK GATE

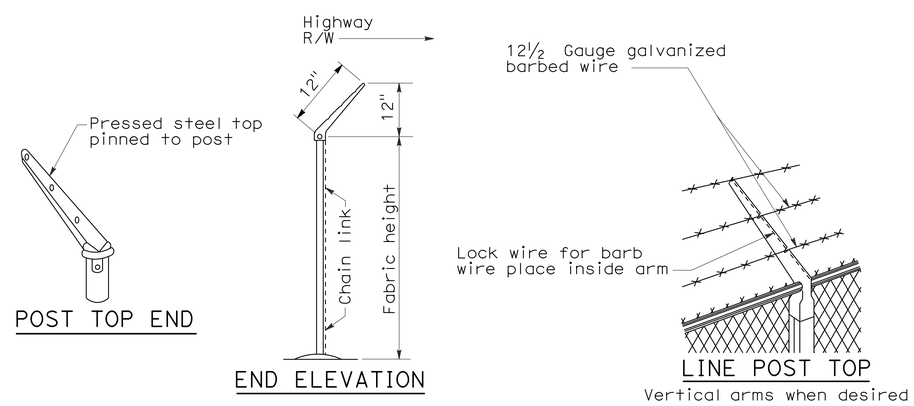

POST TOP END

END ELEVATION

LINE POST TOP
Vertical arms when desired

BARBED WIRE POST TOP
See Note 3

STATE OF CALIFORNIA
DEPARTMENT OF TRANSPORTATION

CHAIN LINK FENCE DETAILS

NO SCALE

NSP A85A DATED JUNE 5, 2009 SUPPLEMENTS THE STANDARD PLANS BOOK DATED MAY 2006.

NEW STANDARD PLAN NSP A85A

2006 NEW STANDARD PLAN NSP A85A

5-7-09

DIST	COUNTY	ROUTE	POST MILES TOTAL PROJECT	SHEET NO.	TOTAL SHEETS
03, 08	Sac, SBd	5, 15	23.3, R107.3	51	330

REGISTERED CIVIL ENGINEER

June 5, 2009
PLANS APPROVAL DATE

REGISTERED PROFESSIONAL ENGINEER Glenn DeCou No. C34547 Exp. 9-30-09 CIVIL STATE OF CALIFORNIA

The State of California or its officers or agents shall not be responsible for the accuracy or completeness of electronic copies of this plan sheet.

To accompany plans dated 9-16-13

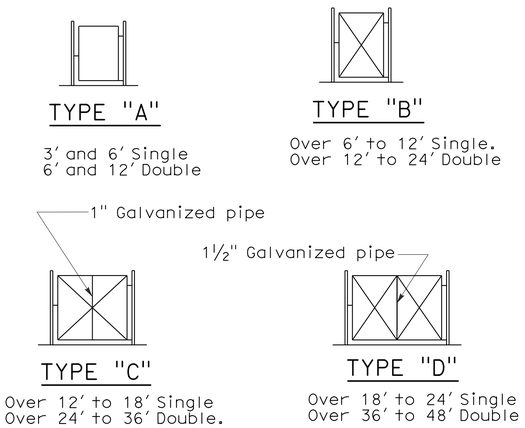

TYPICAL FRAMEWORK SHOWING NUMBER OF BAYS IN GATE

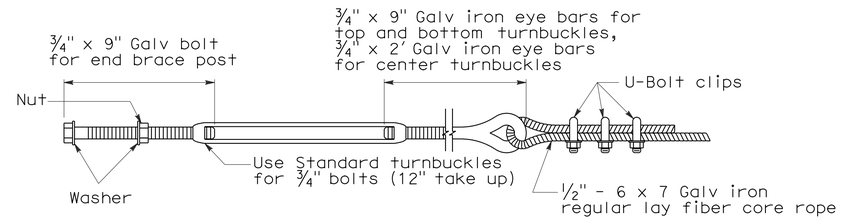

TURNBUCKLE A

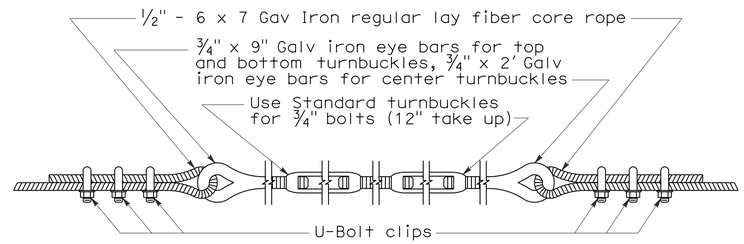

TURNBUCKLE B

NOTES:

1. All material for abutment connection to be galvanized.
2. The chain link fabric shall be replaced by barbed wire strands at 12" maximum centers between the double posts.
3. When the width of the culvert makes it necessary to anchor a post to the top of the culvert, a cast iron shoe or other device approved by the Engineer shall be used.
4. Fencing over stream and around headwall may also use Barbed Wire or Wire Mesh fencing with either wood post or steel post installation.
5. See Revised Standard Plan RSP A85 for Chain Link fence dimensions. See Standard Plan A86 for Barbed Wire and Wire Mesh fence dimensions and for wood post and steel post installation.

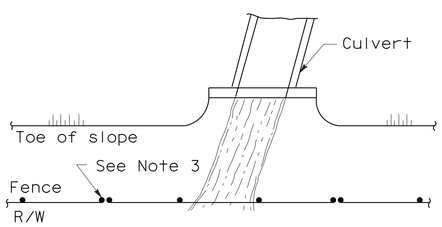

PLAN

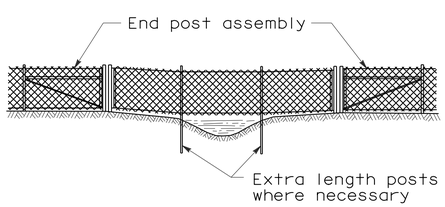

ELEVATION

INSTALLATION OVER STREAM

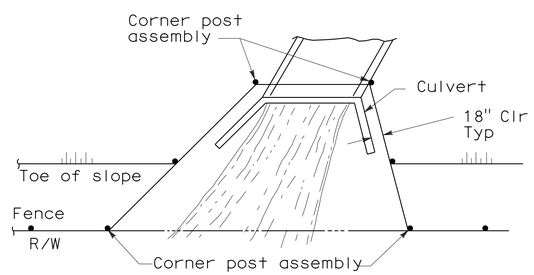

PLAN

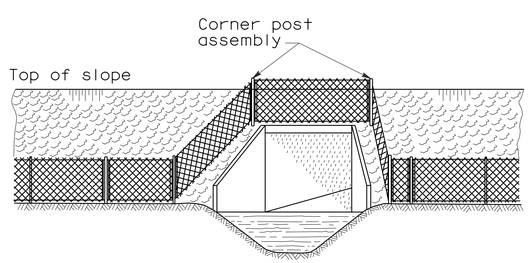

ELEVATION

INSTALLATION AROUND HEADWALL

See Note 4

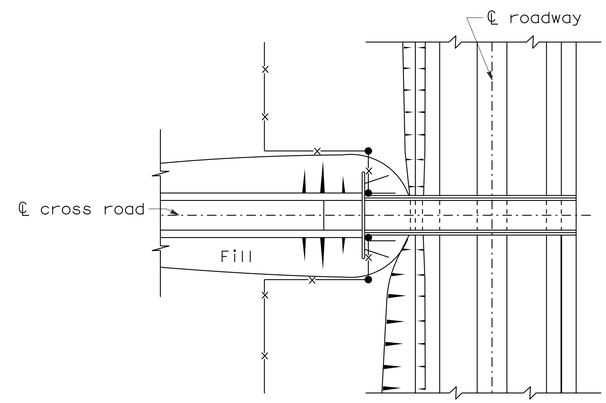

PLAN OF ROADWAY - UNDERPASS

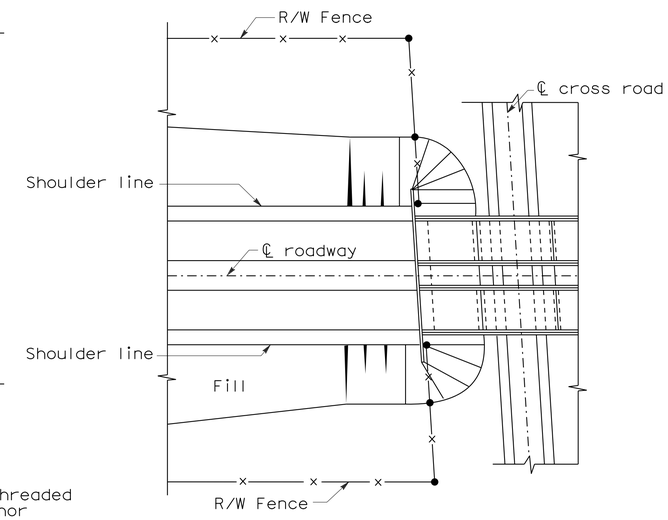

PLAN OF ROADWAY - OVERPASS

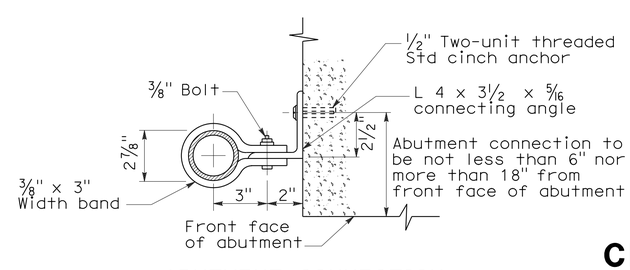

ABUTMENT CONNECTION

TYPICAL INSTALLATION AT BRIDGES

STATE OF CALIFORNIA
DEPARTMENT OF TRANSPORTATION

CHAIN LINK FENCE DETAILS

NO SCALE

NSP A85B DATED JUNE 5, 2009 SUPPLEMENTS THE STANDARD PLANS BOOK DATED MAY 2006.

NEW STANDARD PLAN NSP A85B

2006 NEW STANDARD PLAN NSP A85B

5-12-09

DIST	COUNTY	ROUTE	POST MILES TOTAL PROJECT	SHEET NO.	TOTAL SHEETS
03, 08	Sac, SBd	5, 15	23.3, R107.3	52	330

REGISTERED CIVIL ENGINEER

June 5, 2009
PLANS APPROVAL DATE

REGISTERED PROFESSIONAL ENGINEER Glenn DeCou No. C34547 Exp. 9-30-09 CIVIL STATE OF CALIFORNIA

The State of California or its officers or agents shall not be responsible for the accuracy or completeness of electronic copies of this plan sheet.

To accompany plans dated 9-16-13

NOTES:

1. Offset to be 2'-0" at monument locations, measured at right angles to R/W lines. Taper to achieve offset to be at least 20'-0" long.
2. Line post spacing for wood post equals 12'-0" maximum. Line post spacing for metal post equals 10'-0" maximum.
3. See Standard Plan A86 for Barbed Wire and Wire Mesh dimensions and for steel post and wood post dimensions and weight.
4. Use wood posts when specified in the Special Provisions or shown on the Project Plans.

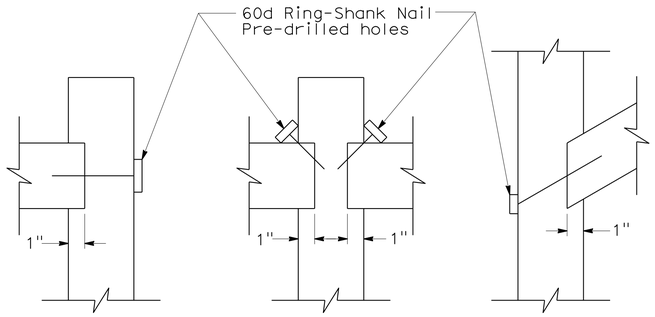

WOOD MORTISE DETAIL

See Note 4

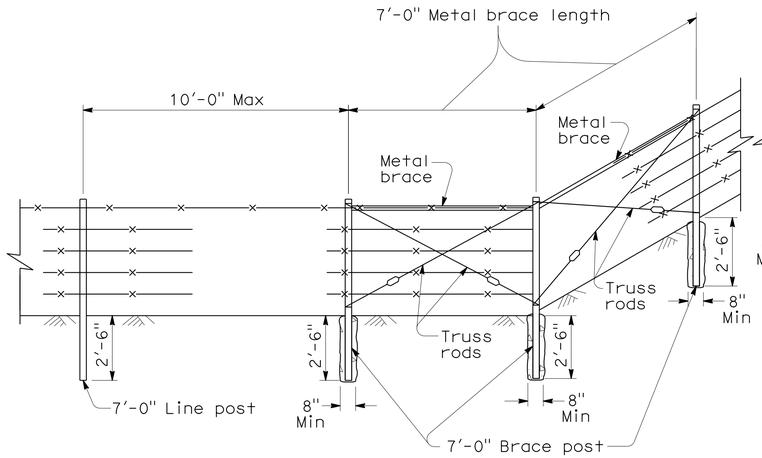

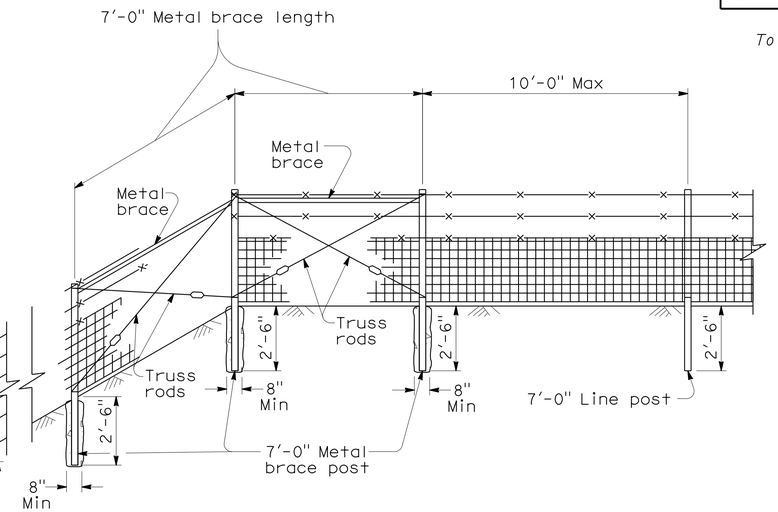

METAL POST

LEGEND

Wire Mesh fencing

Barbed Wire fencing

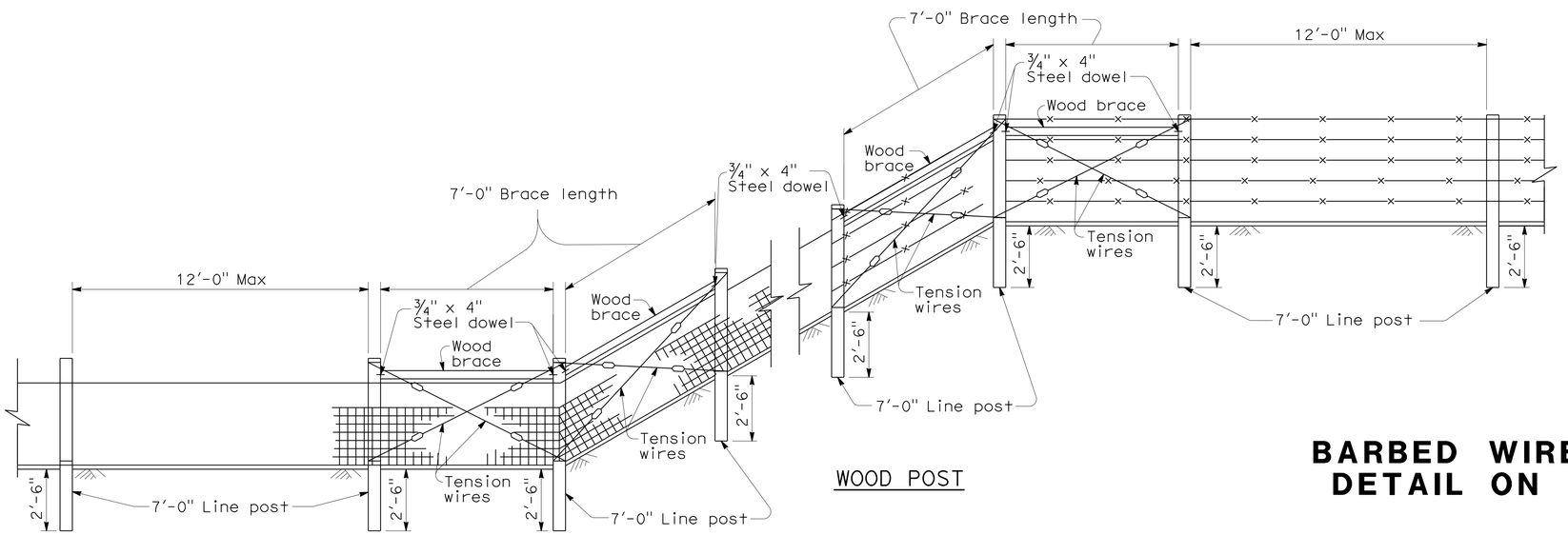

WOOD POST

FENCE ON SHARP BREAK IN GRADE

STATE OF CALIFORNIA
DEPARTMENT OF TRANSPORTATION

BARBED WIRE AND WIRE MESH FENCE DETAIL ON SHARP BREAK IN GRADE

NO SCALE

NSP A86A DATED JUNE 5, 2009 SUPPLEMENTS THE STANDARD PLANS BOOK DATED MAY 2006.

NEW STANDARD PLAN NSP A86A

2006 NEW STANDARD PLAN NSP A86A

5-12-09

DIST	COUNTY	ROUTE	POST MILES TOTAL PROJECT	SHEET NO.	TOTAL SHEETS
03, 08	Sac, SBd	5, 15	23.3, R107.3	53	330

REGISTERED CIVIL ENGINEER

June 5, 2009
PLANS APPROVAL DATE

REGISTERED PROFESSIONAL ENGINEER Glenn DeCou No. C34547 Exp. 9-30-09 CIVIL STATE OF CALIFORNIA

The State of California or its officers or agents shall not be responsible for the accuracy or completeness of electronic copies of this plan sheet.

To accompany plans dated 9-16-13

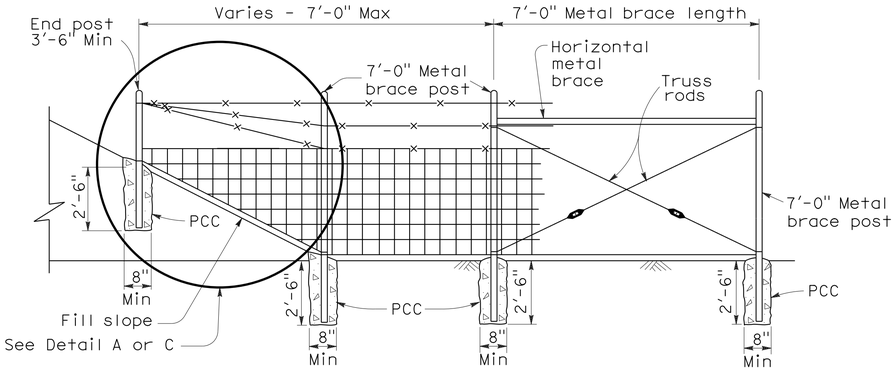

METAL POST

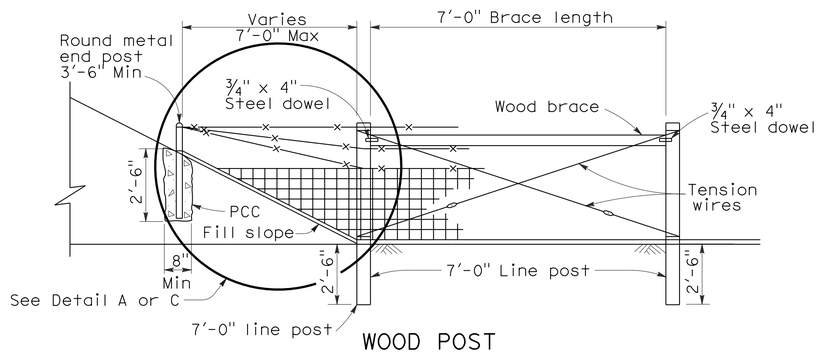

WOOD POST

METHOD OF ERECTING FENCE FOR FILL SLOPE

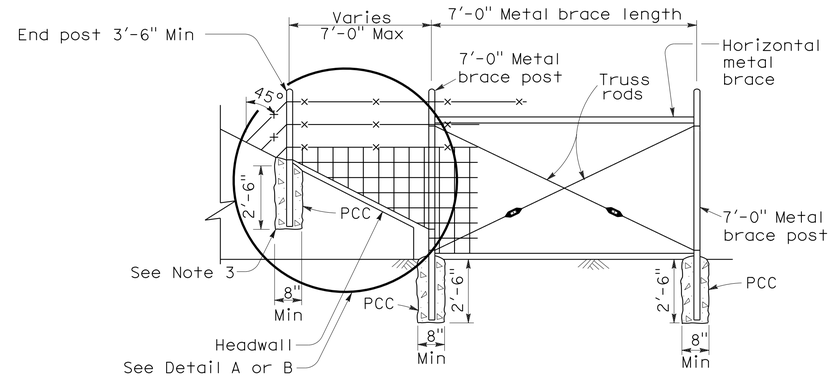

METAL POST

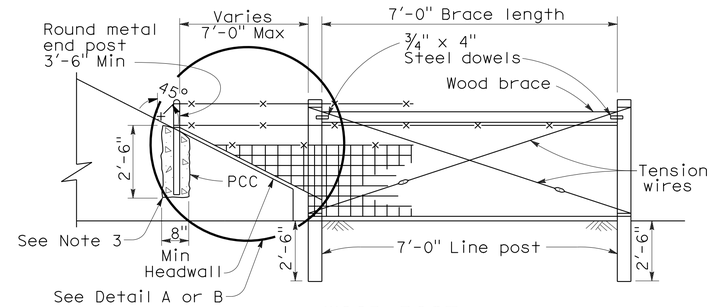

WOOD POST

METHOD OF TYING FENCE TO HEADWALL

NOTES:

1. Wire Mesh fencing shown, can also use Barbed Wire fencing.
2. See Standard Plan A86 for Wire Mesh and Barbed Wire fence dimensions.
3. See Standard Plan B11-7 Alternative Anchorage Detail for connection at headwall. Round metal post to be used for all fence types.

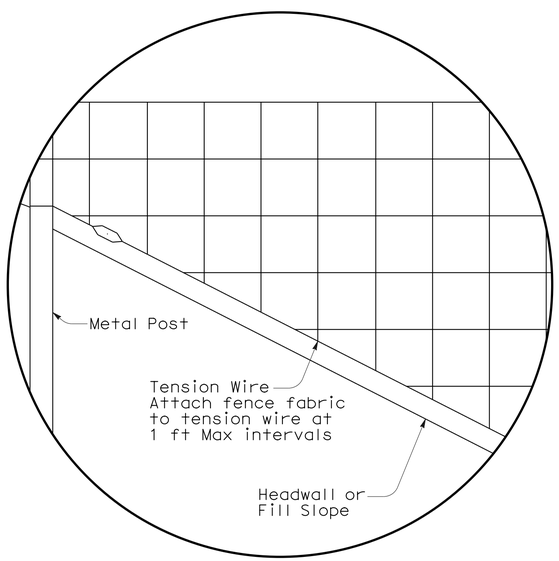

DETAIL A

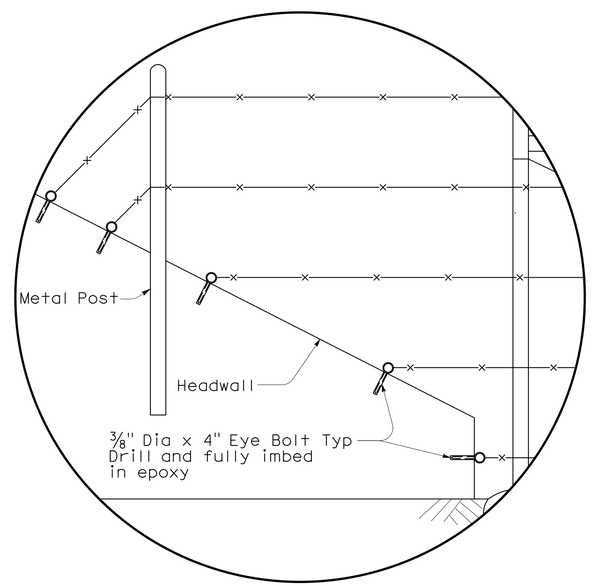

DETAIL B

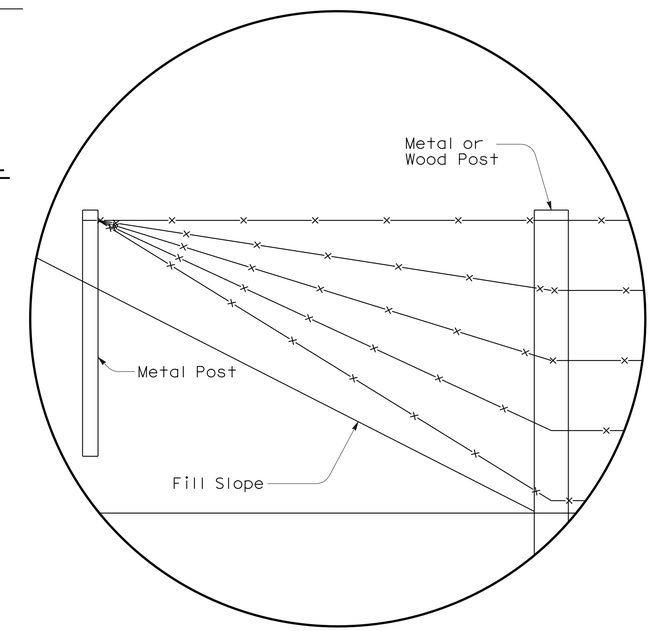

DETAIL C

STATE OF CALIFORNIA
DEPARTMENT OF TRANSPORTATION

BARBED WIRE AND WIRE MESH FENCE DETAILS

NSP A86B DATED JUNE 5, 2009 SUPPLEMENTS THE STANDARD PLANS BOOK DATED MAY 2006.

NEW STANDARD PLAN NSP A86B

2006 NEW STANDARD PLAN NSP A86B

5-12-09

DIST	COUNTY	ROUTE	POST MILES TOTAL PROJECT	SHEET NO.	TOTAL SHEETS
03, 08	Sac, SBd	5, 15	23.3, R107.3	54	330

REGISTERED CIVIL ENGINEER

June 5, 2009
PLANS APPROVAL DATE

REGISTERED PROFESSIONAL ENGINEER Glenn DeCou No. C34547 Exp. 9-30-09 CIVIL STATE OF CALIFORNIA

The State of California or its officers or agents shall not be responsible for the accuracy or completeness of electronic copies of this plan sheet.

To accompany plans dated 9-16-13

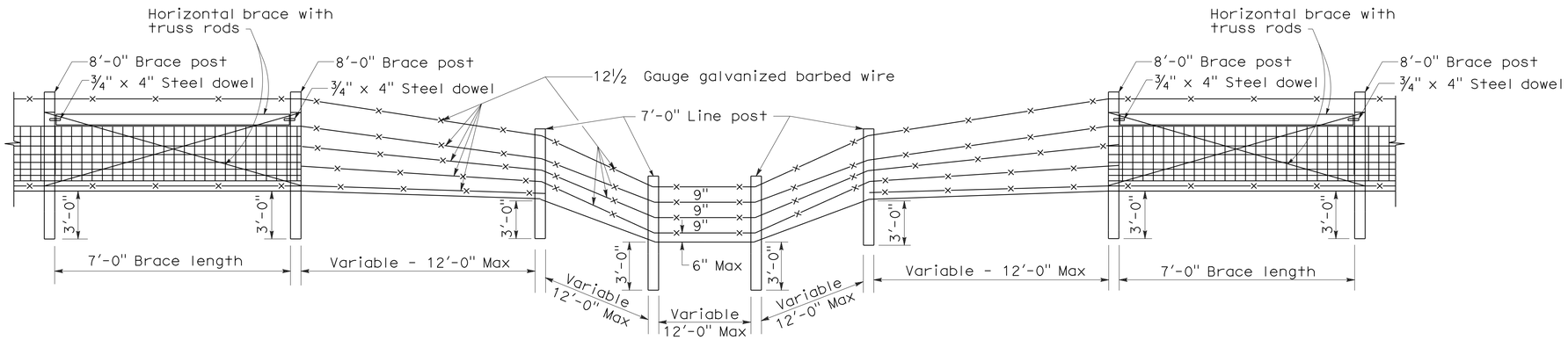

TYPE I

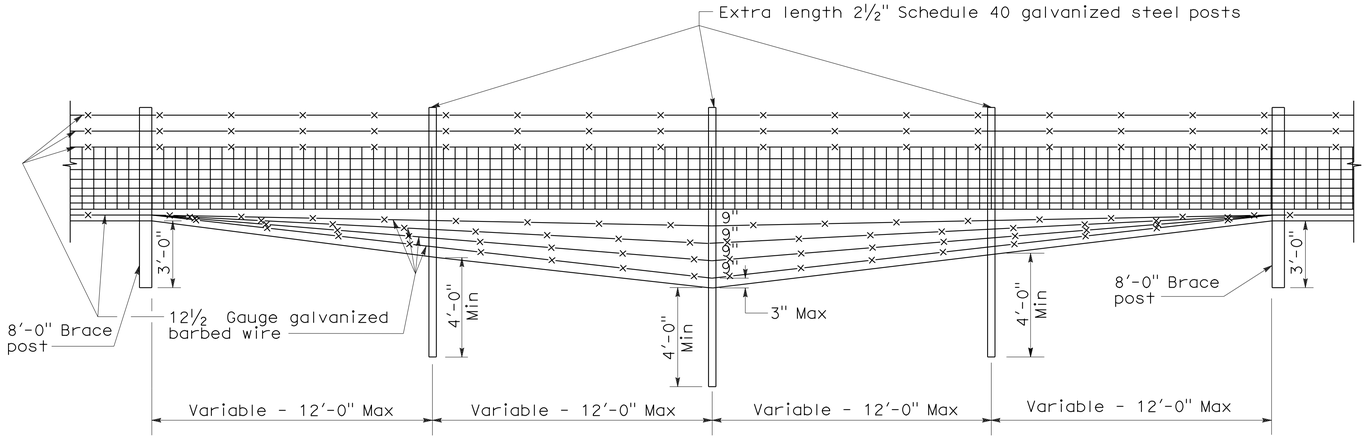

TYPE II

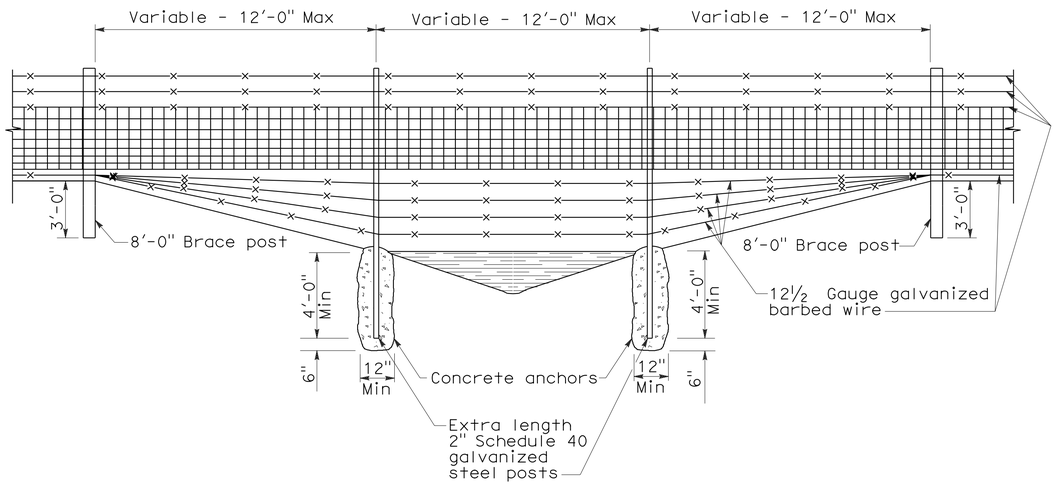

TYPE III

DITCH CROSSINGS

NOTES:

1. Type I Ditch Crossing shows wood posts. Steel posts may be used in place of wood.
2. Ditch crossing show Wire Mesh fencing. Barbed Wire fencing may be used in place of Wire Mesh.
3. See Standard Plan A86 for Wire Mesh and Barbed Wire fence dimensions.
4. See Standard Plan A86 for steel post installation.

STATE OF CALIFORNIA
DEPARTMENT OF TRANSPORTATION

BARBED WIRE AND WIRE MESH FENCE DETAILS AT DITCH CROSSING

NO SCALE

NSP A86C DATED JUNE 5, 2009 SUPPLEMENTS THE STANDARD PLANS BOOK DATED MAY 2006.

NEW STANDARD PLAN NSP A86C

2006 NEW STANDARD PLAN NSP A86C

5-12-09

DIST	COUNTY	ROUTE	POST MILES TOTAL PROJECT	SHEET NO.	TOTAL SHEETS
03, 08	Sac, SBd	5, 15	23.3, R107.3	55	330

REGISTERED CIVIL ENGINEER

November 17, 2006
PLANS APPROVAL DATE

REGISTERED PROFESSIONAL ENGINEER Michael Janzen No. 44788 Exp. 03-31-08 CIVIL STATE OF CALIFORNIA

The State of California or its officers or agents shall not be responsible for the accuracy or completeness of electronic copies of this plan sheet.

To accompany plans dated 9-16-13

2006 REVISED STANDARD PLAN RSP A87A

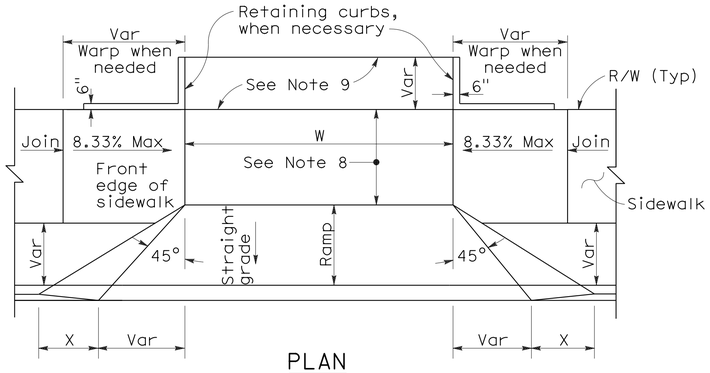

PLAN

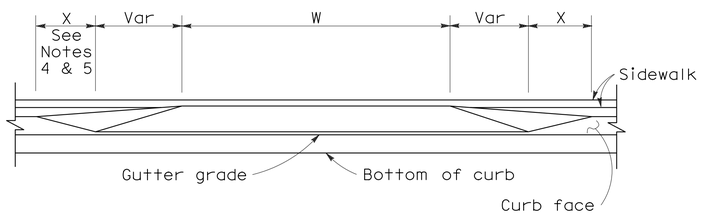

ELEVATION

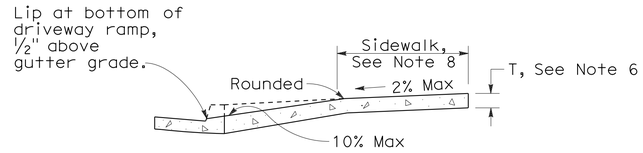

CASE A

Typical driveway, sidewalk not depressed

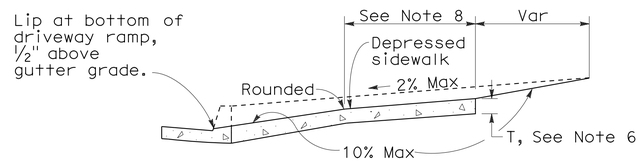

CASE B

Driveway with depressed sidewalk

SECTIONS

DRIVEWAYS

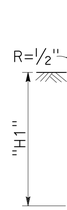

TYPE A1 CURBS

See Table A

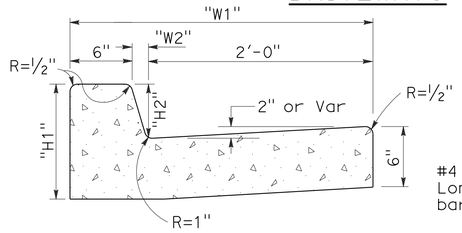

TYPE A2 CURBS

See Table A

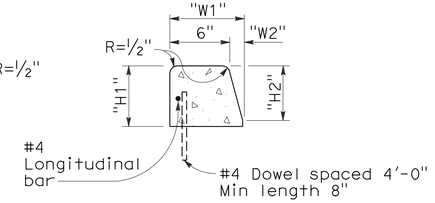

TYPE A3 CURBS

Superimposed on existing pavement
See Table A

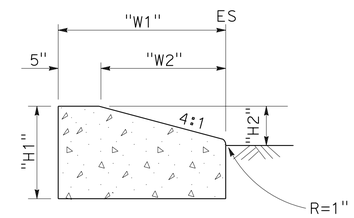

TYPE D CURBS

See Table A

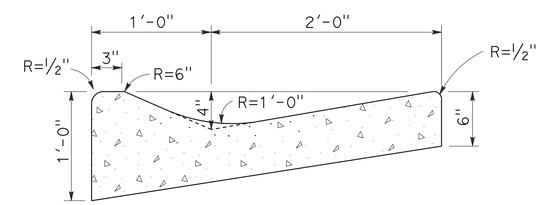

TYPE E CURB

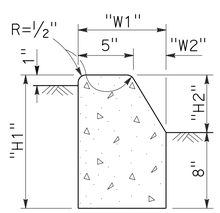

TYPE B1 CURBS

See Table A

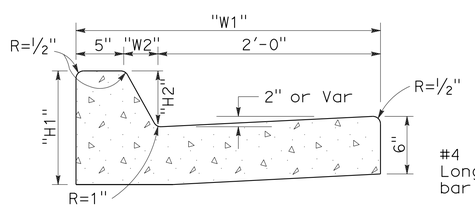

TYPE B2 CURBS

See Table A

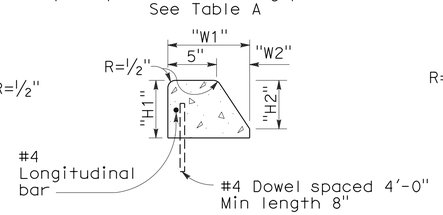

TYPE B3 CURBS

Superimposed on existing pavement
See Table A

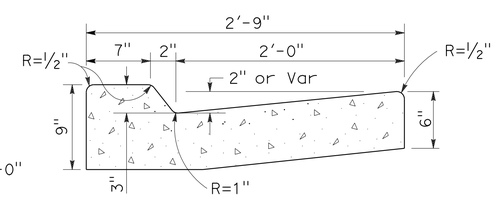

TYPE B4 CURBS

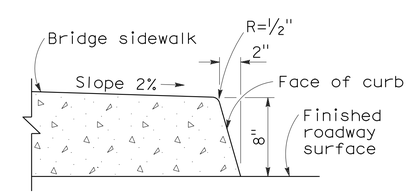

TYPE H CURB

On Bridges

CURB QUANTITIES

TYPE	CUBIC YARDS PER LINEAR FOOT
A1-6	0.02585
A1-8	0.03084
A2-6	0.05903
A2-8	0.06379
A3-6	0.01036
A3-8	0.01435
B1-4	0.02185
B1-6	0.02930
B2-4	0.05515
B2-6	0.06171
B3-4	0.00641
B3-6	0.01074
B4	0.05709
D-4	0.04083
D-6	0.06804
E	0.06661

TABLE A

CURB TYPE	DIMENSIONS "H1"	"H2"	"W1"	"W2"
A1-6	1'-2"	6"	7½"	1½"
A1-8	1'-4"	8"	8"	2"
A2-6	1'-0"	6"	2'-7½"	1½"
A2-8	1'-2"	8"	2'-8"	2"
A3-6	6"	5"	7¼"	1¼"
A3-8	8"	7"	7¾"	1¾"
B1-4	1'-0"	4"	7½"	2½"
B1-6	1'-2"	6"	9"	4"
B2-4	10"	4"	2'-7½"	2½"
B2-6	1'-0"	6"	2'-9"	4"
B3-4	4"	3"	7"	2"
B3-6	6"	5"	8½"	3½"
D-4	10"	4"	1'-6"	1'-1"
D-6	1'-0"	6"	2'-2"	1'-8"

NOTES:

1. Case A driveway section typically applies.
2. Use Case B driveway section when ramp slopes would exceed 10% in Case A.
3. Use Case B driveway section when sidewalk cross slope would exceed 2% in Case A.
4. X=3'-0" except for curb heights over 10" where 4:1 slopes shall be used on curb slope.
5. X is a variable when sidewalk is located where wheelchairs may traverse the surface. Slopes shall not exceed 8.33%.
6. Sidewalk and ramp thickness "T" at driveway shall be 4" for residental and 6" for commercial.
7. Difference in slope of the driveway ramp and the slope of a line between the gutter and a point on the roadway 5'-0" from gutter line shall not exceed 15%. Reduce driveway ramp slope, not gutter slope, where required.
8. Minimum width of clear passageway for sidewalk shall be 4'-0".
9. Retaining curbs and acquisition of construction easement may be necessary for narrow sidewalks or curb heights in excess of 6".
10. Across the pedestrian route at curb ramp locations, the gutter pan slope shall not exceed 1" of depth for each 2'-0" of width.

CURBS

STATE OF CALIFORNIA
DEPARTMENT OF TRANSPORTATION

CURBS AND DRIVEWAYS

NO SCALE

RSP A87A DATED NOVEMBER 17, 2006 SUPERSEDES STANDARD PLAN A87A DATED MAY 1, 2006 - PAGE 113 OF THE STANDARD PLANS BOOK DATED MAY 2006.

REVISED STANDARD PLAN RSP A87A

10-25-06

DIST	COUNTY	ROUTE	POST MILES TOTAL PROJECT	SHEET NO.	TOTAL SHEETS
03, 08	Sac, SBd	5, 15	23.3, R107.3	56	330

REGISTERED CIVIL ENGINEER

September 1, 2006
PLANS APPROVAL DATE

REGISTERED PROFESSIONAL ENGINEER — Hector David Cordova — No. C41957 — Exp. 3-31-08 — CIVIL — STATE OF CALIFORNIA

The State of California or its officers or agents shall not be responsible for the accuracy or completeness of electronic copies of this plan sheet.

To accompany plans dated 9-16-13

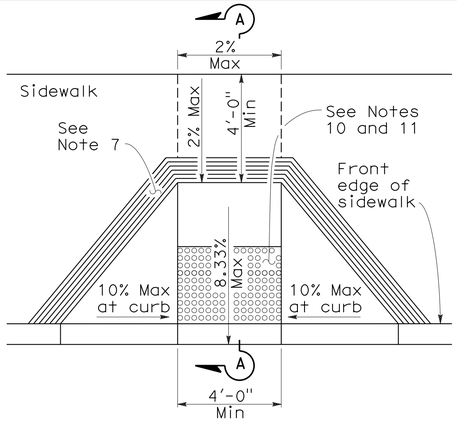

CASE A

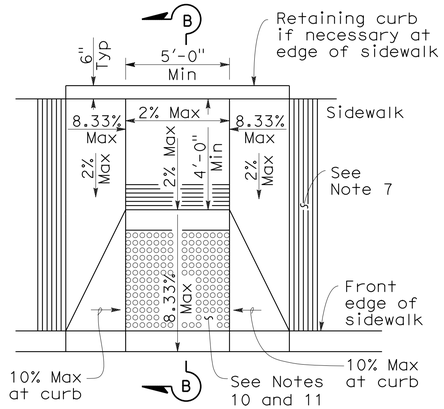

CASE B

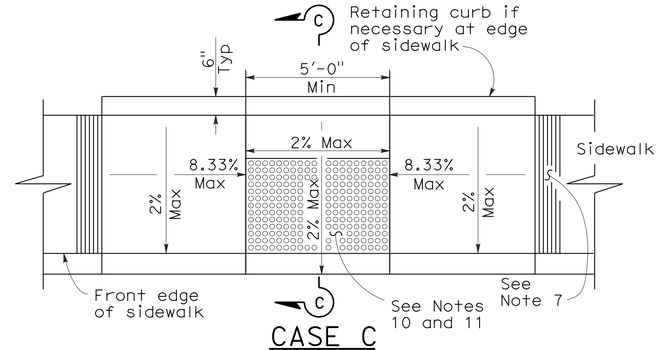

CASE C

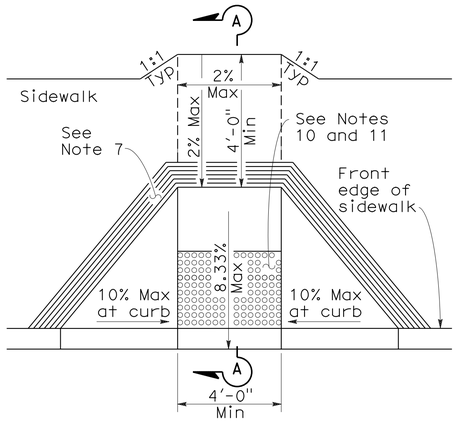

CASE D

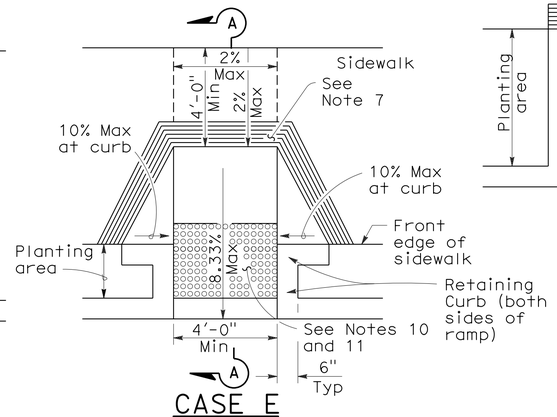

CASE E

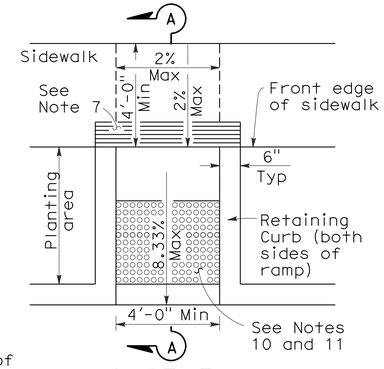

CASE F

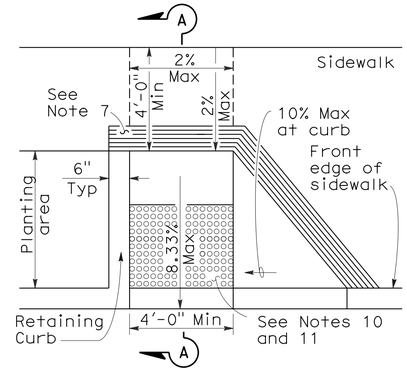

CASE G
See Note 4

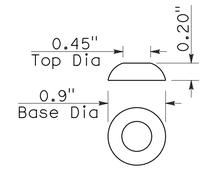

RAISED TRUNCATED DOME

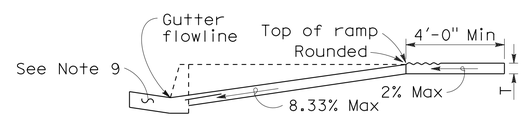

SECTION A-A

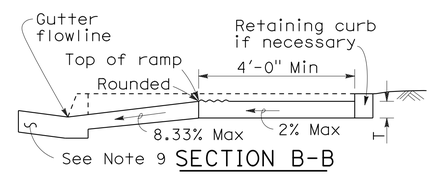

SECTION B-B
Depress entire sidewalk as required

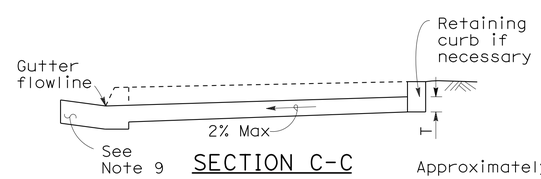

SECTION C-C

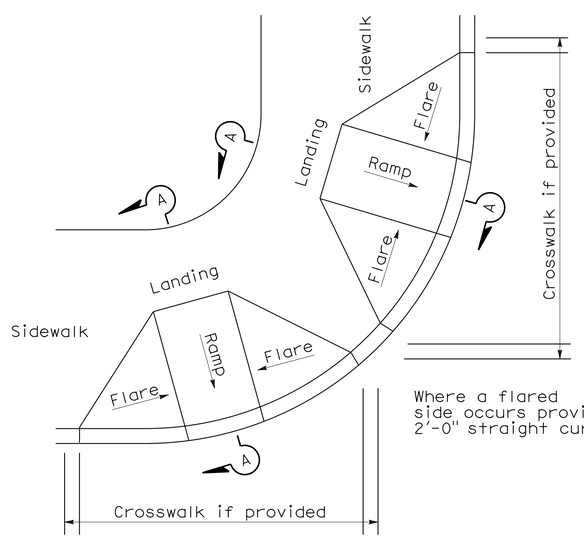

DETAIL A
TYPICAL TWO-RAMP CORNER INSTALLATION
See Note 1

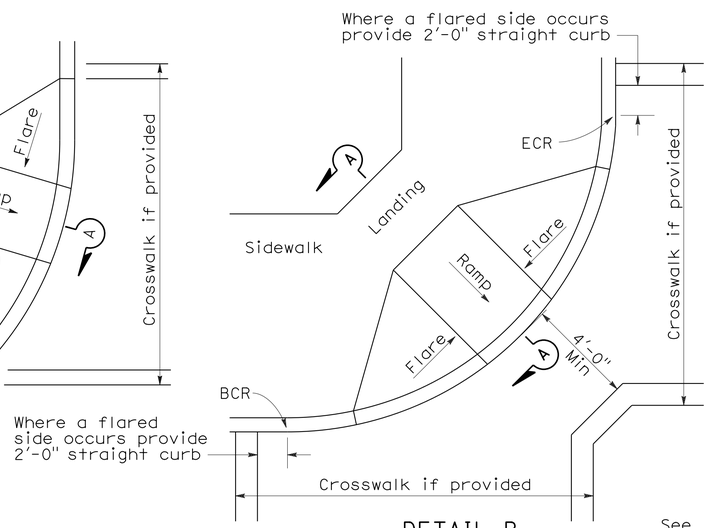

DETAIL B
TYPICAL ONE-RAMP CORNER INSTALLATION
See Notes 1 and 3

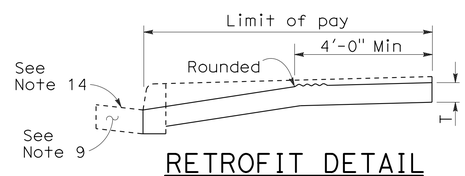

RETROFIT DETAIL
Existing curb and sidewalk

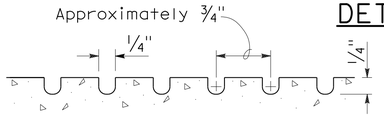

GROOVING DETAIL

NOTES:

1. As site conditions dictate, Case A through Case G curb ramps may be used for corner installations similar to those shown in Detail A and Detail B. The case of curb ramps used in Detail A do not have to be the same. Case A through Case G curb ramps also may be used at mid block locations, as site conditions dictate.
2. If distance from curb to back of sidewalk is too short to accommodate ramp and 4'-0" platform (landing) as shown in Case A, the sidewalk may be depressed longitudinally as in Case B, or C or may be widened as in Case D.
3. When ramp is located in center of curb return, crosswalk configuration must be similar to that shown for Detail B.
4. As site conditions dictate, the retaining curb side and the flared side of the Case G ramp shall be constructed in reversed position.
5. If located on a curve, the sides of the ramp need not be parallel, but the minimum width of the ramp shall be 4'-0".
6. Side slope of ramp flares vary uniformly from a maximum of 10% at curb to conform with longitudinal sidewalk slope adjacent to top of the ramp, except in Case C and Case F.
7. The curb ramp shall be outlined, as shown, with a 1'-0" wide border with 1/4" grooves approximately 3/4" on center. See grooving detail.
8. Transitions from ramps and landing to walks, gutters or streets shall be flush and free of abrupt changes.
9. Maximum slopes of adjoining gutters, the road surface immediately adjacent to the curb ramp or accessible route shall not exceed 5 percent within 4'-0" of the top and bottom of the curb ramp.
10. Curb ramps shall have a detectable warning surface that extends the full width and 3'-0" depth of the ramp. Detectable Warning Surfaces shall conform to the details on this plan and the requirements in the Special Provisions.
11. The edge of the detectable warning surface nearest the street shall be between 6" and 8" from the gutter flowline.
12. Sidewalk and ramp thickness, "T", shall be 3½" minimum.
13. Utility pull boxes, manholes, vaults and all other utility facilities within the boundaries of the curb ramp will be relocated or adjusted to grade by the owner prior to, or in conjunction with, curb ramp construction.
14. For retrofit conditions, removal and replacement of curb apron will be at the Contractor's option, unless otherwise shown on project plans.

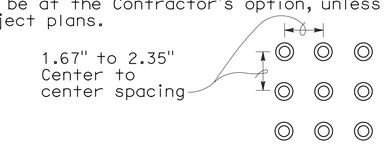

RAISED TRUNCATED DOME PATTERN (IN-LINE)
DETECTABLE WARNING SURFACE
See Note 10

STATE OF CALIFORNIA
DEPARTMENT OF TRANSPORTATION

CURB RAMP DETAILS

NO SCALE

RSP A88A DATED SEPTEMBER 1, 2006 SUPERSEDES STANDARD PLAN A88A DATED MAY 1, 2006 - PAGE 115 OF THE STANDARD PLANS BOOK DATED MAY 2006.

REVISED STANDARD PLAN RSP A88A

2006 REVISED STANDARD PLAN RSP A88A

8-3-06

DIST	COUNTY	ROUTE	POST MILES TOTAL PROJECT	SHEET NO.	TOTAL SHEETS
03, 08	Sac, SBd	5, 15	23.3, R107.3	57	330

REGISTERED CIVIL ENGINEER

June 5, 2009
PLANS APPROVAL DATE

REGISTERED PROFESSIONAL ENGINEER Glenn DeCou No. C34547 Exp. 9-30-09 CIVIL STATE OF CALIFORNIA

The State of California or its officers or agents shall not be responsible for the accuracy or completeness of electronic copies of this plan sheet.

To accompany plans dated 9-16-13

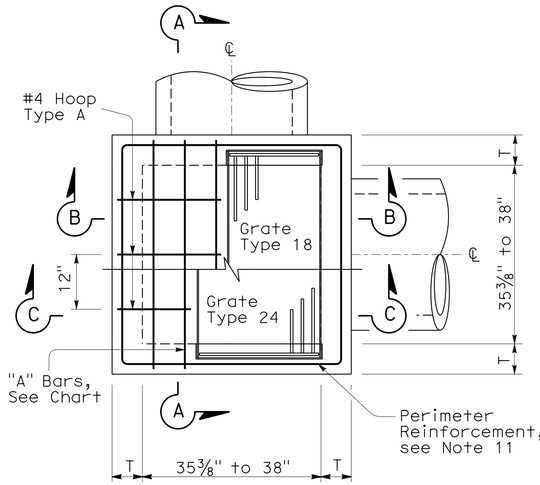

STANDARD TYPE G2 OR G4

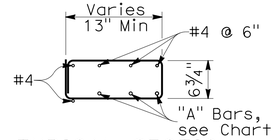

TYPICAL SECTION
(HOOP TYPE A)

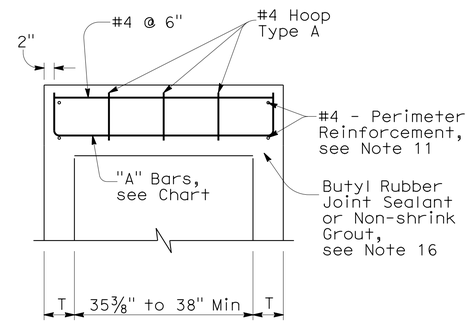

SECTION A-A

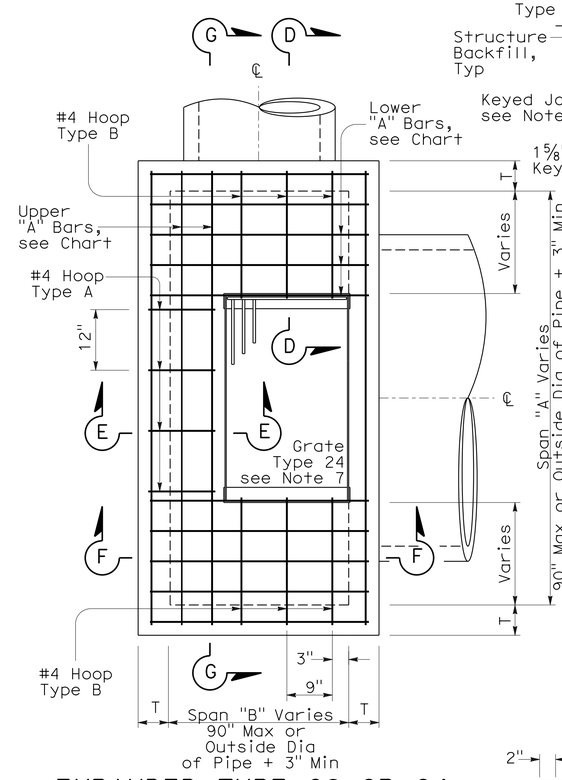

EXPANDED TYPE G2 OR G4
(Top Rebar Not Shown)

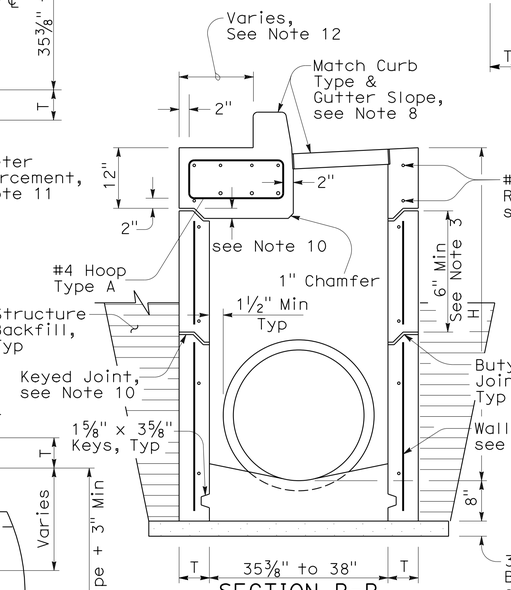

SECTION B-B
(with G4 Top)

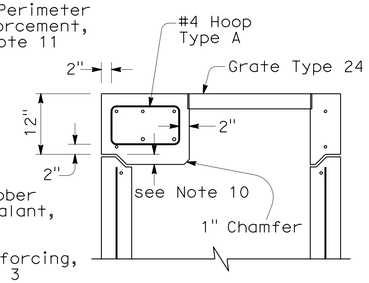

SECTION C-C
(with G2 Top)

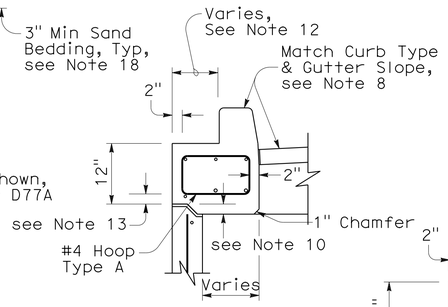

SECTION E-E
(with G4 Top)

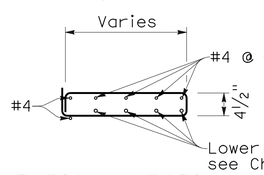

TYPICAL SECTION
(HOOP TYPE B)

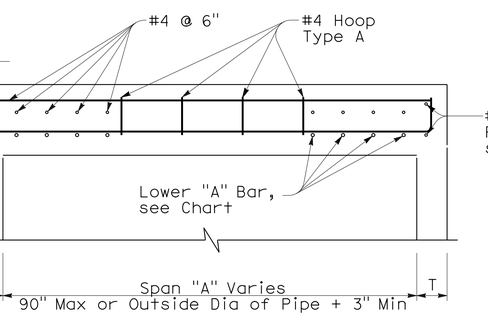

SECTION G-G

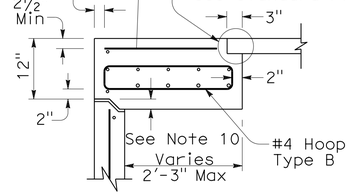

SECTION D-D

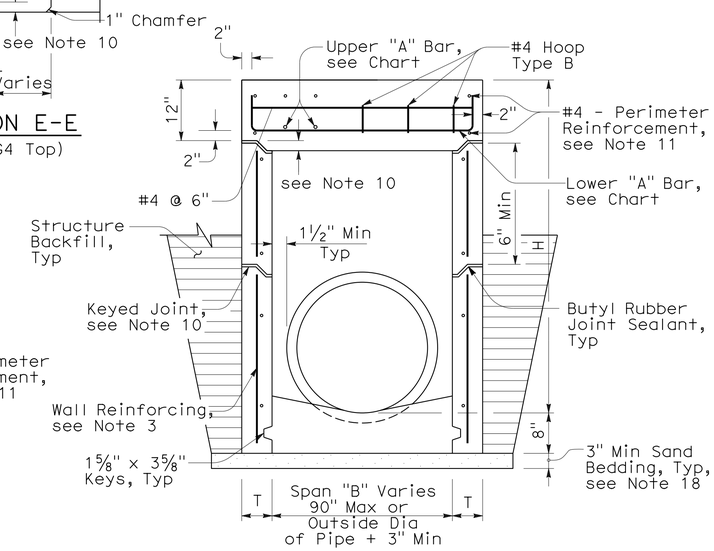

SECTION F-F
(with G2 Top)

NOTES:

1. "H" is the difference in elevation between the outlet pipe flow line and the normal gutter grade line undepressed.
2. For "T" wall thickness: T=6" when "H" is 8' or less. T=8" when "H" is over 8'.
3. Wall reinforcing not required when "H" is 8' or less and the unsupported width or length is 6'-0" or less. Reinforce wall exceeding these limits with #4 bars @ 1'-6" ± centers placed 2" clear to the inside of inlet unless otherwise shown. Short independent wall sections or height adjustment rings 6" to 24" high must have a minimum of two #4 horizontal bars.
4. Seal pre-cast inlets connection openings between wall and pipe with non-shrink grout or resilient connectors as specified in the Special Provisions.
5. Steps - None required where "H" is less than 2'-6". Where "H" is 2'-6" or more, install steps with lowest rung 1'-0" above the floor and highest rung not more than 6" below bottom of lid. The distance between steps must not exceed 1'-0" and be uniform throughout the length of the wall. Place steps in the wall without an opening. Steps inserts may be substituted for the bar steps. Step inserts must comply with State Industrial Safety Requirements. See Standard Plan D74C for step details.
6. Pipe(s) can be placed in any wall.
7. Set inlet so that grate bars are parallel to direction of principal surface flow.
8. Type G4 inlet can use Grate Type 18 or 24. Type G2 inlet uses Grate Type 24. See Revised Standard Plan RSP D77A and Standard Plan D77B for grate and frame details and weights of miscellaneous Iron and Steel.
9. G4 inlet details are the same as the G2 with the addition of a curb and sloped grate that matches the adjacent curb and gutter depression. See Standard Plans D78A & D78B for gutter and inlet depresssion details. See Revised Standard Plan RSP A87A & Standard Plan A87B for Curb and Dike Details.
10. Provide pre-cast inlets with separate top sections for final grade adjustment under Standard Specifcation Section 51-1.02. Provide keyed joints between the top and wall and multiple wall sections. Joint design may vary but must be 1" to 3" in depth.
11. Perimeter reinforcement serves as a rigid frame to position and attach the required structural reinforcement and may be tack welded at outer corners when using ASTM A706 weldable bars.
12. This dimension will vary with different grates, curbs types, box width and wall thickness.
13. 2" unless inlet is expanded in the Span "A" direction, then clearance is 2" plus the diameter of the lower "A" bar.
14. Place "A" Bars at an angle so hooked ends will maintain 2" clear coverage.
15. Refer to Standard Plan D73, Table A for concrete quantities.
16. Non-shrink grout can be used for upper most joint to facilitate final top grade adjustment.
17. Slope inlet floors 4:1 towards the outlet pipe. Pre-cast inlets may have monolithic sloped floors, flat floors, or no floors in which case a sloped floor must be cast in the field. Inlet floors do not require reinforcing.
18. Extend sand bedding under all structure backfill.

TOP REINFORCEMENT CHART

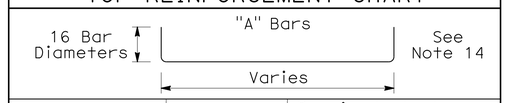

Span	"A" Bars	Required steel area per foot (in^2/ft)
Under 38" with Type 24 Grate	#5 @ 7" C-C 2-#5 Min	0.525
Under 38" with Type 18 Grate	#5 @ 7" C-C 3-#5 Min	0.525
38"-60"	#5 @ 6" C-C	0.621
61"-72"	#5 @ 5" C-C	0.744
73"-90"	#6 @ 6" C-C	0.811

STATE OF CALIFORNIA
DEPARTMENT OF TRANSPORTATION

DRAINAGE INLETS (PRECAST)

NO SCALE

NSP D73A DATED JUNE 5, 2009 SUPPLEMENTS THE STANDARD PLANS BOOK DATED MAY 2006.

NEW STANDARD PLAN NSP D73A

2006 NEW STANDARD PLAN NSP D73A

3-16-09

DIST	COUNTY	ROUTE	POST MILES TOTAL PROJECT	SHEET NO.	TOTAL SHEETS
03, 08	Sac, SBd	5, 15	23.3, R107.3	58	330

REGISTERED CIVIL ENGINEER

June 15, 2007
PLANS APPROVAL DATE

REGISTERED PROFESSIONAL ENGINEER Glenn DeCou No. C34547 Exp. 9-30-07 CIVIL STATE OF CALIFORNIA

The State of California or its officers or agents shall not be responsible for the accuracy or completeness of electronic copies of this plan sheet.

To accompany plans dated 9-16-13

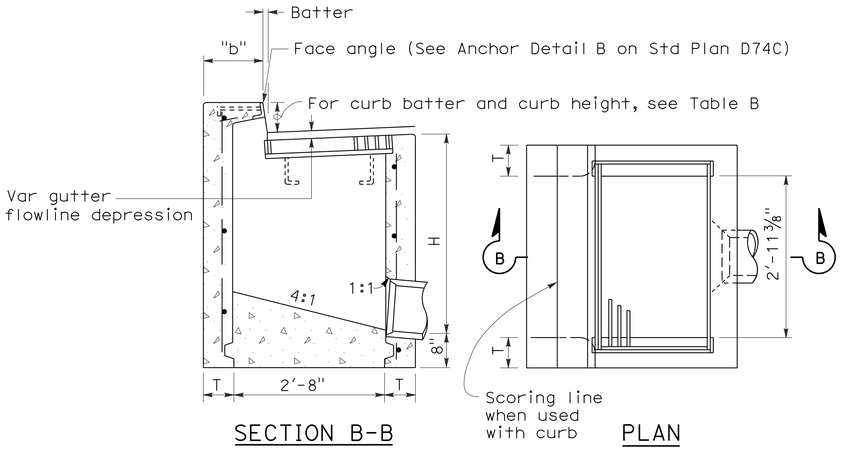

SECTION B-B PLAN

TYPE GO

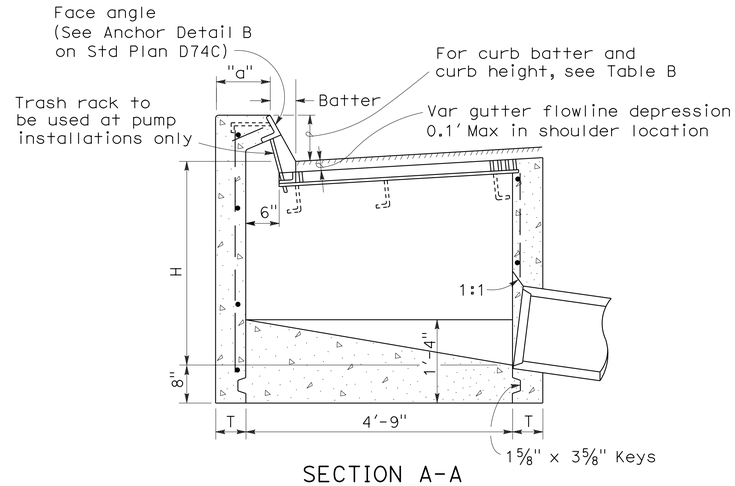

SECTION A-A

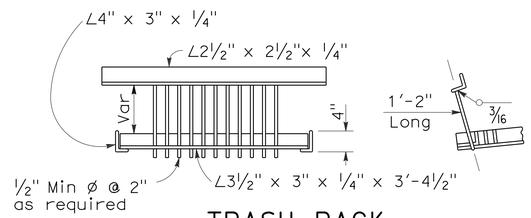

TRASH RACK

(For use with pump installation)

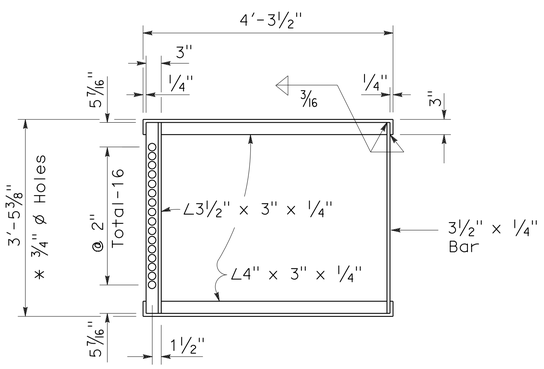

* 3/4" ø Holes required only with trash rack

GRATE FRAME FOR TYPE GDO INLET

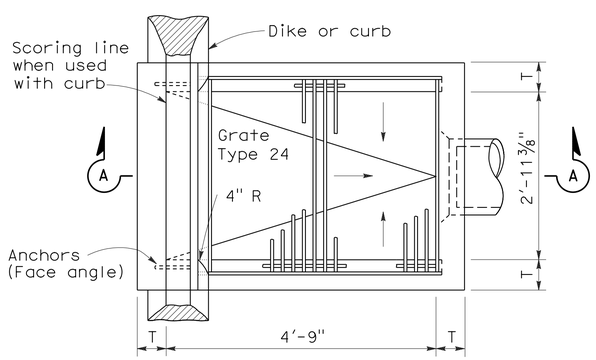

PLAN

TYPE GDO

TABLE A

CONCRETE QUANTITIES				
	H=3'-0" TO 8'-0" (T=6")		H=8'-1" TO 20'-0" (T=8")	
TYPE	H=3'-0" (CY)	ADDITIONAL PCC PER FOOT (CY)	H=8'-1" (CY)	ADDITIONAL PCC PER FOOT (CY)
GO	1.24	0.245	3.39	0.346
GDO	1.62	0.322	4.36	0.446

Table based on 8" floor slab, no deduction for pipe openings, and curb type giving highest quantity of concrete. No deductions or adjustments are to be made to these quantities because of pipe openings, different floor alternatives or different curb type.

TABLE B

CURB TYPE	NORMAL CURB HEIGHT	CURB BATTER	"a" DIMENSION	"b" DIMENSION
A1-6	6"	1 1/2"	T+7 1/2"	T+6 1/2"
A1-8	8"	2"	T+7"	T+6"
B1-6	6"	4"	T+5"	T+4"
Type A Dike	6"	3"	T+6"	T+5"

NOTES:

1. "H" is the difference in elevation between the outlet pipe flow line and the normal gutter grade line undepressed.
2. For "T" wall thickness, see Table A below.
3. Wall reinforcing not required when "H" is 8'-0" or less and the unsupported width or length is 7'-0" or less. Walls exceeding these limits shall be reinforced with #4 @ 18"± centers placed 1 1/2" clear to inside of box unless otherwise shown.
4. Inlet bottom reinforcing not required. See Standard Plan D74C for alternative reinforced bottom.
5. Steps - None required where "H" is less than 2'-6" Where "H" is 2'-6" or more, install steps with lowest rung 1'-0" above the floor and highest rung not more than 6" below top of inlet. The distance between steps shall not exceed 1'-0" and shall be uniform throughout the length of the wall. Place steps in the wall without an opening. Step inserts may be substituted for the bar steps. Step Inserts shall comply with State Industrial Safety requirements. See Standard Plan D74C for step details.
6. When shown on the project plans, place a 3/4" plain round protection bar horizontally across the length of the opening and bend back 4" into the inlet wall on each side.
7. Pipe(s) can be placed in any wall.
8. Curb section shall match adjacent curb.
9. Basin floors shall have wood trowel finish and shall slope toward the outlet pipe as shown.
10. Galvanizing - See Standard Specifications or Special Provisions.
11. See Standard Plan D77A and D77B for grate and frame details and weights of miscellaneous iron and Steel.
12. See Standard Plan D78A for gutter depression details.
13. Full penetration butt welds may be substituted for the fillet welds on all anchors.
14. Standard square, hexagon, round or equivalent headed anchors may be substituted for the right angle hooks on the anchors shown on this plan.
15. Cast-in-place or precast alternative is optional with contractor. See Standard Specifications.
16. Cast-in-place inlets to be formed around all pipes/stubs intersecing the inlet and concrete poured in one continuous operation. Precast inlets shall have mortared pipe connections conforming to details for Type GCP inlets on Standard Plan D75B. See Standard Specifications for mortar composition.

STATE OF CALIFORNIA
DEPARTMENT OF TRANSPORTATION

DRAINAGE INLETS

NO SCALE

RSP D74B DATED JUNE 15, 2007 SUPERSEDES STANDARD PLAN D74B DATED MAY 1, 2006 - PAGE 150 OF THE STANDARD PLANS BOOK DATED MAY 2006.

REVISED STANDARD PLAN RSP D74B

2006 REVISED STANDARD PLAN RSP D74B

4-16-07

DIST	COUNTY	ROUTE	POST MILES TOTAL PROJECT	SHEET NO.	TOTAL SHEETS
03, 08	Sac, SBd	5, 15	23.3, R107.3	59	330

Raymond Don Tsztoo
REGISTERED CIVIL ENGINEER

July 20, 2012
PLANS APPROVAL DATE

REGISTERED PROFESSIONAL ENGINEER Raymond Don Tsztoo No. C37332 Exp. 6-30-14 CIVIL STATE OF CALIFORNIA

The State of California or its officers or agents shall not be responsible for the accuracy or completeness of electronic copies of this plan sheet.

To accompany plans dated 9-16-13

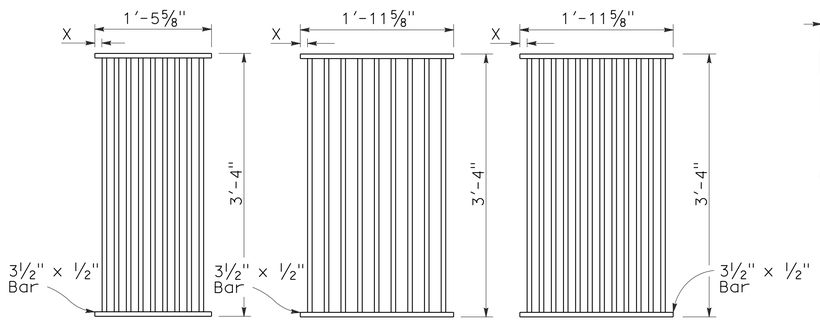

TYPE 18-9

1⅜" Clear spacing. Use within the roadbed on highways where bicycles and pedestrians are excluded.

TYPE 24-9

2" Clear spacing. Use in locations off the roadbed on all types of highways.

TYPE 24-12

1⅜" Clear spacing. Use within the roadbed on highways where bicycles and pedestrians are excluded.

RECTANGULAR GRATE DETAILS

(See table below)

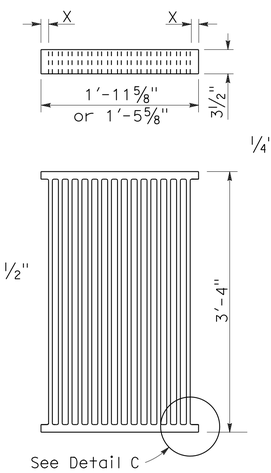

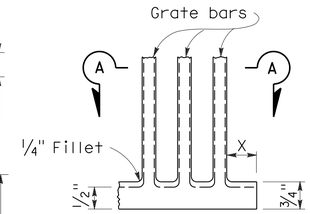

DETAIL C

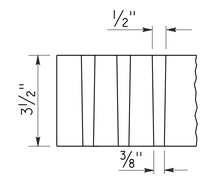

SECTION A-A

ALTERNATIVE CAST DUCTILE IRON GRATE OR CAST CARBON STEEL GRATE

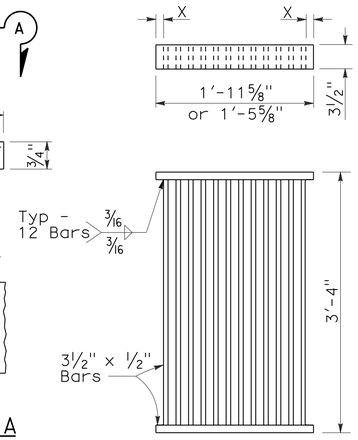

ALTERNATIVE WELDED GRATE

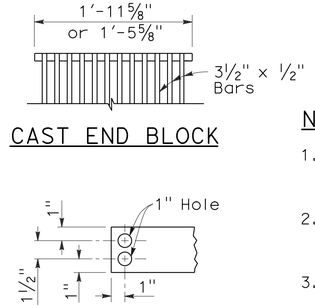

CAST END BLOCK

END OF BAR

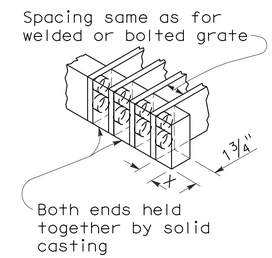

ALTERNATIVE CAST DUCTILE IRON OR CAST CARBON STEEL END BLOCK GRATE

NOTES:

1. Grate type numbers refer to approximate width of grate in inches and number of bars, respectively.
2. Contractor has the option of using cast ductile iron, cast carbon steel, welded, bolted, or cast end block grate.
3. See Special Provisions for requirements pertaining to galvanizing or asphalt dipping of grates and frames.
4. Rounded top of bars optional on all grates.
5. Pipe inlets with a grate shall be placed so that bars parallel direction of principle surface flow.
6. Complete joint penetration butt welds may be substituted for the fillet welds on all anchors.
7. Standard square, hexagon, round or equivalent headed anchors may be substituted for the right angle hooks on the anchors shown on this plan.
8. Grate and frame weights are based on welded grates (weights of face angles, steps, protection bars, etc. are not included).
9. Connect chain to grate and frame only at locations shown on the plans. When chain is required, do not use cast ductile iron grates.

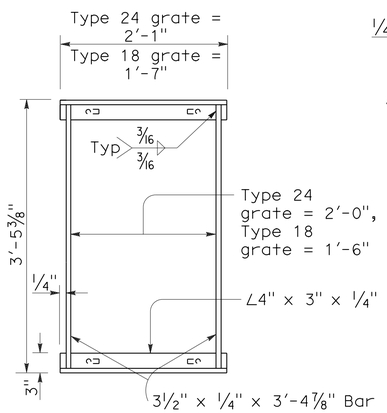

TYPICAL FRAME

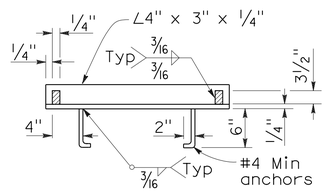

CROSS SECTION

(Thru frame)

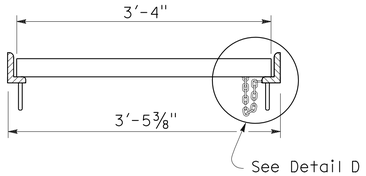

LONGITUDINAL SECTION

(Thru frame and grate)

RECTANGULAR FRAME DETAILS

(For all rectangular grates)

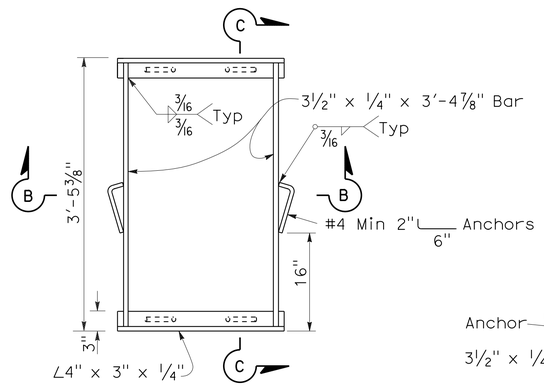

TYPICAL FRAME

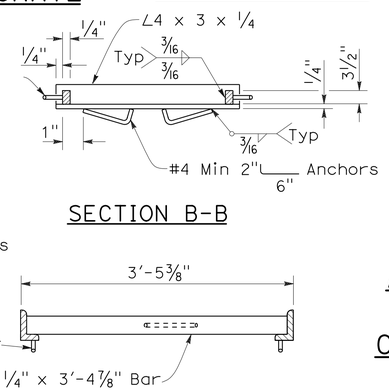

SECTION B-B

SECTION C-C

ALTERNATIVE ANCHOR FOR RECTANGULAR FRAME

(For details not shown, See Rectangular Frame Details)

INLET TYPE	GRATE TYPE	No. OF GRATES	WEIGHT LB
GDO	24-12	2	634
GOL-7	24-12	1	326
GOL-10	24-12	1	326
GO,G1,G2,G3,G4 (TYPE 24)	24-9	1	263
	24-12	1	326
G4 (TYPE 18),G5,G6	18-9	1	249
GT1	18-9	2	498
GT2	18-9	2	498
GT3	24-12	2	652
GT4	24-12	2	652
TRASH RACK			22
GRATE CHAIN			3

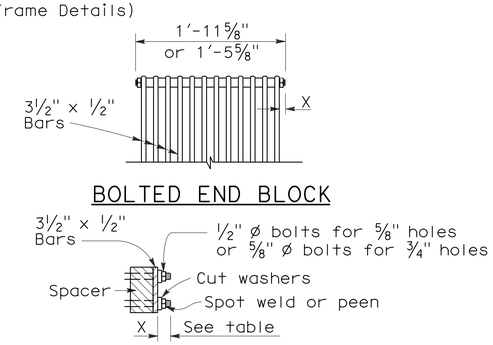

BOLTED END BLOCK

BOLTING DETAIL

ALTERNATIVE BOLTED GRATE

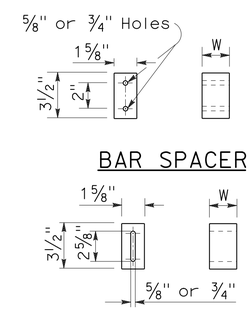

BAR SPACER

ALTERNATIVE SPACER

W = 1⅜" or 2"

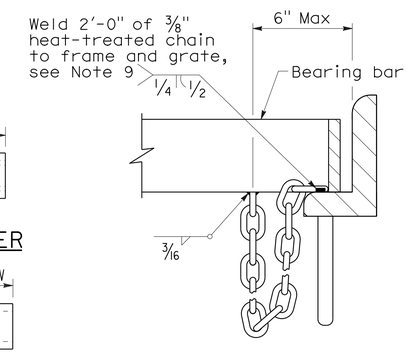

DETAIL D

(Steel grates only)

GRATE BAR SPACING TABLE

TYPE	No. OF BARS	CLEAR BAR SPACING	X
18-9	9	1⅜"	1 1/16"
24-9	9	2"	1 9/16"
24-12	12	1⅜"	1¼"

INLET TYPE	COVER TYPE	WEIGHT LB
OS	PLATE	174
OL-7	PLATE	170
OL-10	PLATE	170
OL-14	PLATE	170
OL-21	PLATE	170
OCP	PLATE	112
OCPI	PLATE	112
OCPI	REDWOOD	42
OMP	PLATE	177
OMPI	PLATE	177

BASIS FOR Misc IRON & STEEL FINAL PAY WEIGHTS FOR DRAINAGE INLETS

(See Note 8)

STATE OF CALIFORNIA
DEPARTMENT OF TRANSPORTATION

GRATE DETAILS

NO SCALE

RSP D77A DATED JULY 20, 2012 SUPERSEDES RSP D77A DATED JANUARY 18, 2008 AND STANDARD PLAN D77A DATED MAY 1, 2006 - PAGE 155 OF THE STANDARD PLANS BOOK DATED MAY 2006.

REVISED STANDARD PLAN RSP D77A

2006 REVISED STANDARD PLAN RSP D77A

6-13-12

DIST	COUNTY	ROUTE	POST MILES TOTAL PROJECT	SHEET NO.	TOTAL SHEETS
03, 08	Sac, SBd	5, 15	23.3, R107.3	60	330

Raymond Don Tsztoo
REGISTERED CIVIL ENGINEER

July 20, 2012
PLANS APPROVAL DATE

REGISTERED PROFESSIONAL ENGINEER — Raymond Don Tsztoo — No. C37332 — Exp. 6-30-14 — CIVIL — STATE OF CALIFORNIA

The State of California or its officers or agents shall not be responsible for the accuracy or completeness of electronic copies of this plan sheet.

To accompany plans dated 9-16-13

2006 REVISED STANDARD PLAN RSP D77B

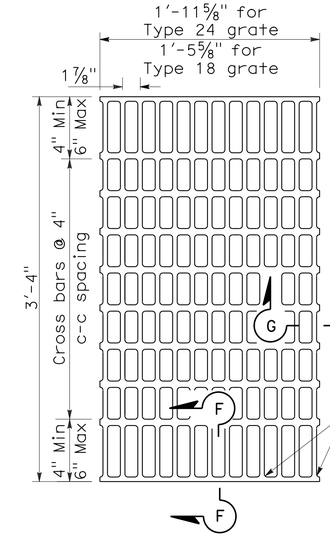

NOTES:

Bearing bars to be 3½" x ¼" bars on 1⅞" centers.

⅜"± ø Cross bars may be fillet welded, resistance welded or electroforged to bearing bars.

Weight of Type 24 grate = 141 LBS.

Weight of Type 18 grate = 107 LBS. (Type 24 grate shown).

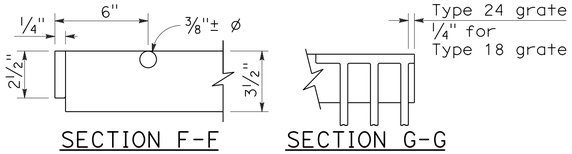

SECTION F-F SECTION G-G

TYPE 18-10 AND 24-13 GRATE

(Welded Steel)

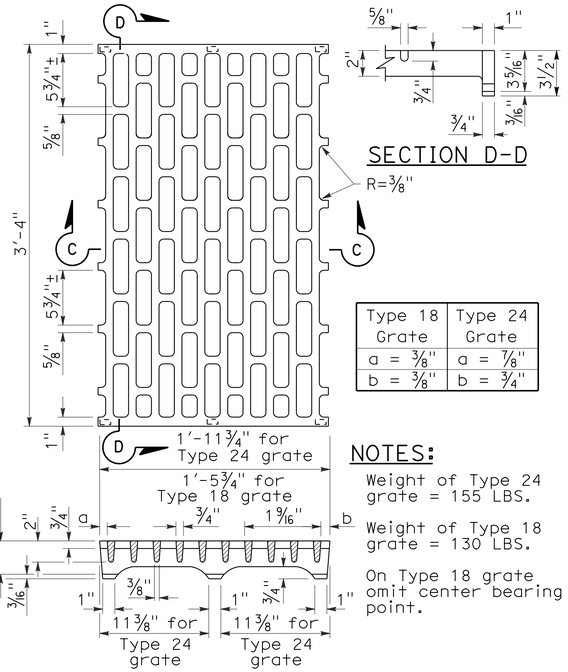

SECTION D-D

NOTES:

Weight of Type 24 grate = 155 LBS.

Weight of Type 18 grate = 130 LBS.

On Type 18 grate omit center bearing point.

Type 18 Grate	Type 24 Grate
a = ⅜"	a = ⅞"
b = ⅜"	b = ¾"

SECTION C-C

TYPE 18-8C AND 24-10C GRATE

(Cast ductile iron)

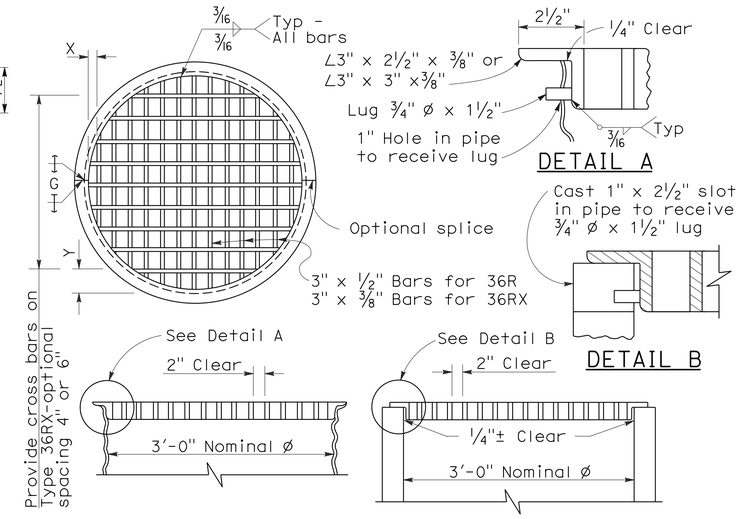

TYPE 36R AND 36RX GRATE DETAILS

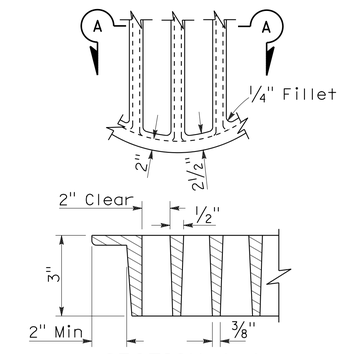

SECTION A-A

ALTERNATIVE CAST DUCTILE IRON GRATE OR CAST CARBON STEEL GRATE TYPE 36R AND 36RX

BASIS FOR Misc IRON AND STEEL FINAL PAY WEIGHTS FOR DRAINAGE INLETS

INLET TYPE	GRATE TYPE	No. OF GRATES	WEIGHT LB
GDO (SEE NOTE 4)	24-10C	2	391
	24-10S	2	456
	24-12X	2	473
	24-13	2	374
GO,GOL,G1,G2, G3,G4 (TYPE 24)	24-10C	1	202
	24-10S	1	229
	24-12X	1	239
	24-13	1	188
G4 (TYPE 18) G5,G6	18-8S	1	187
	18-9X	1	187
	18-10	1	149
GT1,GT2	18-8S	2	374
	18-9X	2	374
	18-10	2	298
GT3,GT4	24-10C	2	404
	24-10S	2	458
	24-12X	2	478
	24-13	2	376
ODI	36RX (Mod)	1	196
GMP,GCP,GCPI	36RX	1	215
ODI	36R (Mod)	1	220
GMP,GCP,GCPI	36R	1	236
TRASH RACK			22
GRATE CHAIN			3

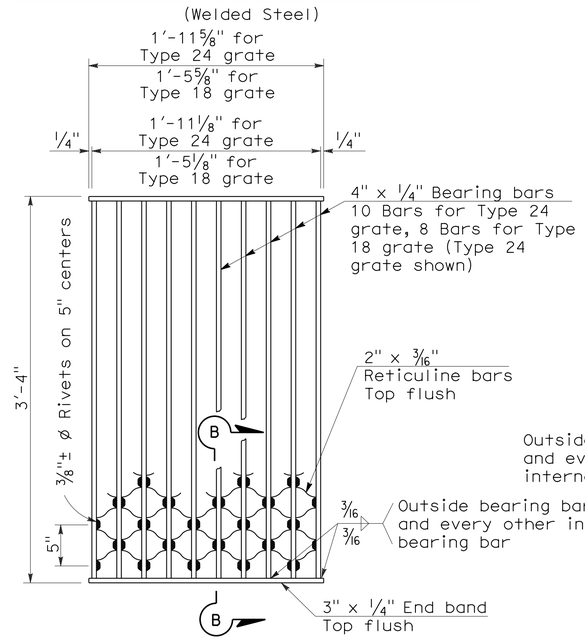

NOTES:

Weight of Type 24 grate = 182 LBS.
Weight of Type 18 grate = 145 LBS.

SECTION B-B

TYPE 18-8S AND 24-10S GRATE

(Welded Steel) Reticuline type

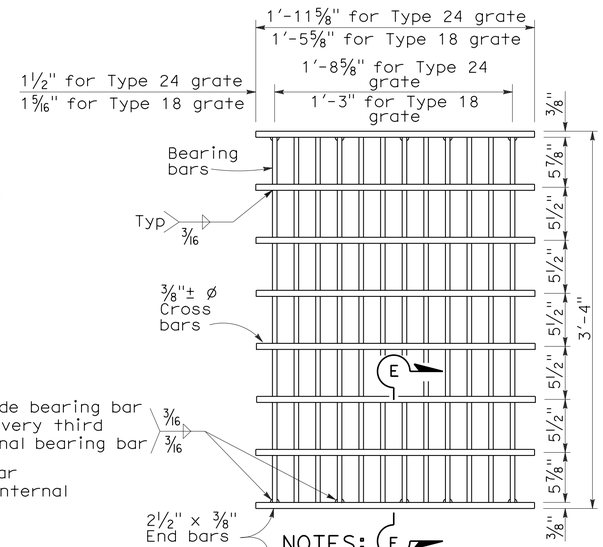

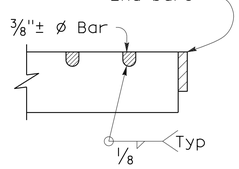

SECTION E-E

NOTES:

Bearing bars to be 3½" x ⅜" bars on 1⅞" centers.

12 Bars for Type 24 grate - 9 bars for Type 18 grates. (Type 24 grate shown).

Weight of Type 24 grate = 192 LBS.

Weight of Type 18 grate = 145 LBS.

⅜"± ø Cross bars may be fillet welded, resistance welded or electroforged to bearing bars.

TYPE 18-9X AND 24-12X GRATE

(Welded Steel)

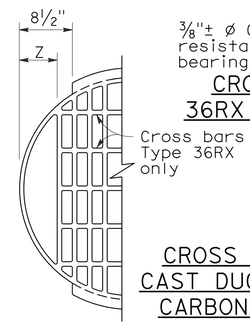

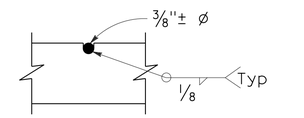

⅜"± ø Cross bars may be fillet welded, resistance welded or electroforged to bearing bars.

CROSS BAR DETAIL TYPE 36RX GRATE (WELDED STEEL)

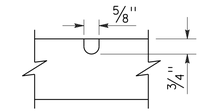

CROSS BAR DETAIL ALTERNATIVE CAST DUCTILE IRON GRATE OR CAST CARBON STEEL GRATE TYPE 36RX

MODIFIED TYPE 36R AND 36RX GRATE FOR ODI INLET

NOTES:

1. When alternative grates are allowed - Final pay based on alternative with the lesser weight.
2. Use frame shown on Standard Plan D74A, RSP D74B or RSP D77A as appropriate.
3. When Type 24-10S, 24-12X or 24-13 grates are used with GDO Inlets, a ¼" x 3½" x 3'-4⅞" steel bar shall be welded across the center of inlet frame to separate the individual grates.
4. See Revised Standard Plan RSP D77A for connecting chain to welded grate and frame. When chain is required, do not use cast ductile iron grate.

GRATE BAR SPACING TABLE

TYPE	No. OF BARS	CLEAR BAR SPACING	X	Y 4" SPACING	Y 6" SPACING	Z
36R	13	2"	2⅛"	-	-	-
36RX (Steel)	15	2"	9/16"	3¾"	5¾"	-
36RX (Cast)	13	2"	2⅛"	3¾"	5¾"	-
36R Mod	12	2"	2⅛"	-	-	5"
36RX Mod (Steel)	13	2"	9/16"	3¾"	5¾"	5 11/16"
36RX Mod (Cast)	12	2"	2⅛"	3¾"	5¾"	5"

STATE OF CALIFORNIA
DEPARTMENT OF TRANSPORTATION

BICYCLE TRAVERSABLE GRATE DETAILS

NO SCALE

RSP D77B DATE JULY 20, 2012 SUPERSEDES STANDARD PLAN D77B
DATED MAY 1, 2006 - PAGE 156 OF THE STANDARD PLANS BOOK DATED MAY 2006.

REVISED STANDARD PLAN RSP D77B

4-24-12

DIST	COUNTY	ROUTE	POST MILES TOTAL PROJECT	SHEET NO.	TOTAL SHEETS
03, 08	Sac, SBd	5, 15	23.3, R107.3	61	330

Randell D. Hiatt
REGISTERED CIVIL ENGINEER

June 6, 2008
PLANS APPROVAL DATE

REGISTERED PROFESSIONAL ENGINEER
Randell D. Hiatt
No. C50200
Exp. 6-30-09
CIVIL
STATE OF CALIFORNIA

The State of California or its officers or agents shall not be responsible for the accuracy or completeness of electronic copies of this plan sheet.

To accompany plans dated 9-16-13

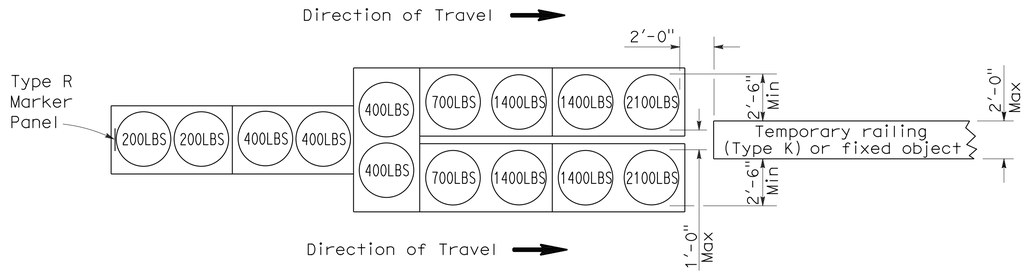

ARRAY 'TU14'

Approach speed 45 mph or more

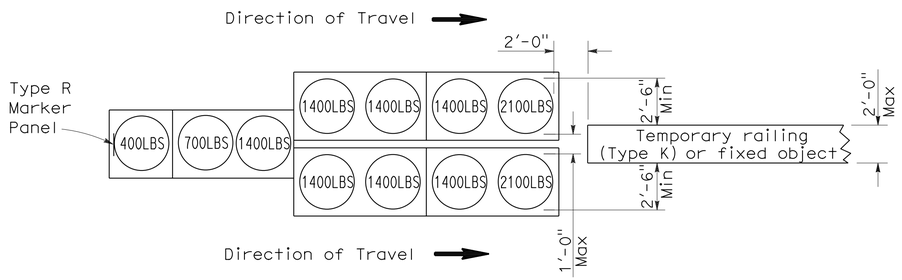

ARRAY 'TU11'

Approach speed less than 45 mph

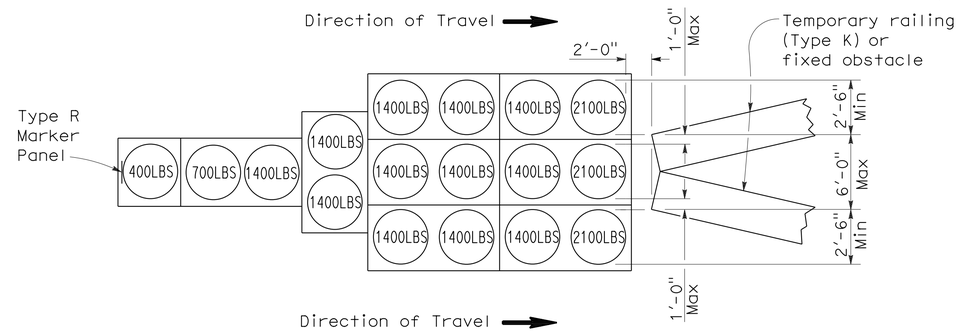

ARRAY 'TU17'

Approach speed less than 45 mph

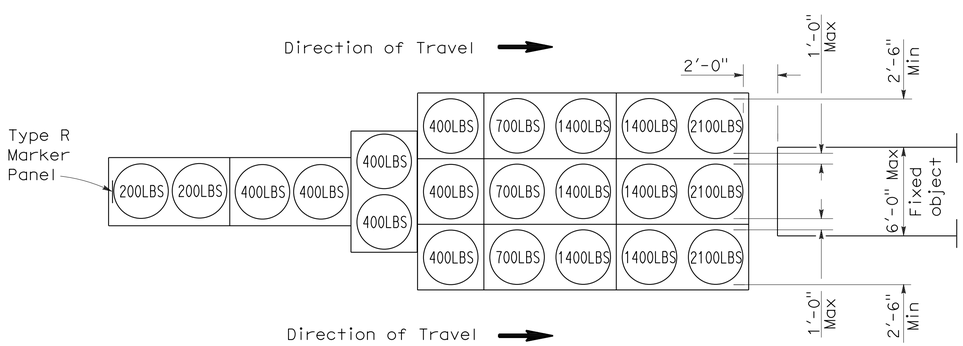

ARRAY 'TU21'

Approach speed 45 mph or more

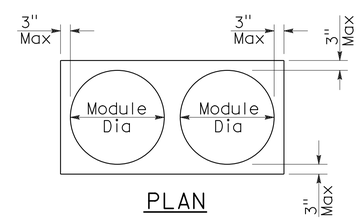

PLAN

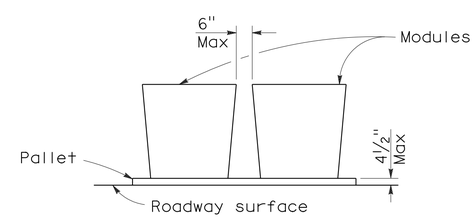

ELEVATION

CRASH CUSHION PALLET DETAIL

See Note 7

NOTES:

1. (XXX) Indicates sand filled module location and weight of sand in pounds for each module. Module spacing is based on the greater diameter of the module.
2. All sand weights are nominal.
3. Temporary crash cushion arrays shall not encroach on the traveled way.
4. Place the top of Type R marker panel 1" below the module lid.
5. Refer to Standard Plan A73B for marker details.
6. Approach speeds indicated conform to NCHRP 350 Report criteria.
7. Use of pallets is optional.

STATE OF CALIFORNIA
DEPARTMENT OF TRANSPORTATION

TEMPORARY CRASH CUSHION, SAND FILLED (UNIDIRECTIONAL)

NO SCALE

RSP T1A DATED JUNE 6, 2008 SUPERSEDES STANDARD PLAN T1A
DATED MAY 1, 2006 - PAGE 211 OF THE STANDARD PLANS BOOK DATED MAY 2006.

REVISED STANDARD PLAN RSP T1A

2006 REVISED STANDARD PLAN RSP T1A

DIST	COUNTY	ROUTE	POST MILES TOTAL PROJECT	SHEET NO.	TOTAL SHEETS
03, 08	Sac, SBd	5, 15	23.3, R107.3	62	330

Randell D. Hiatt
REGISTERED CIVIL ENGINEER

June 6, 2008
PLANS APPROVAL DATE

REGISTERED PROFESSIONAL ENGINEER
Randell D. Hiatt
No. C50200
Exp. 6-30-09
CIVIL
STATE OF CALIFORNIA

The State of California or its officers or agents shall not be responsible for the accuracy or completeness of electronic copies of this plan sheet.

To accompany plans dated 9-16-13

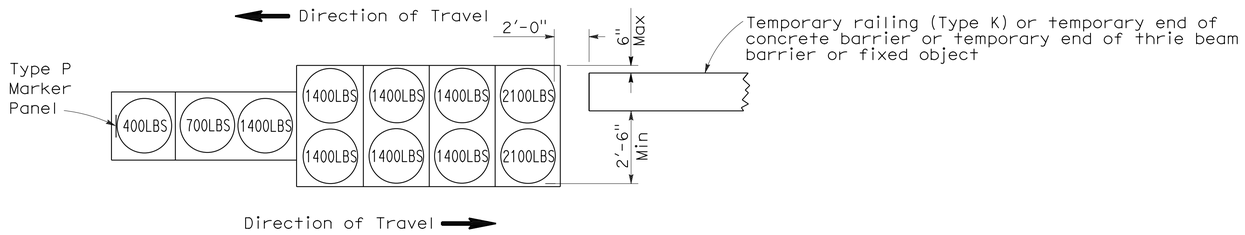

ARRAY 'TB11'

Approach speed less than 45 mph

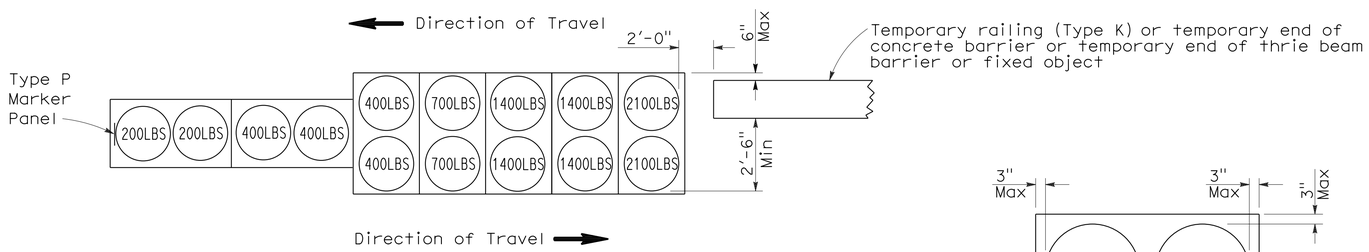

ARRAY 'TB14'

Approach speed 45 mph or more

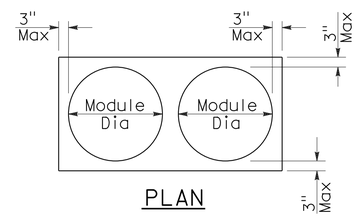

PLAN

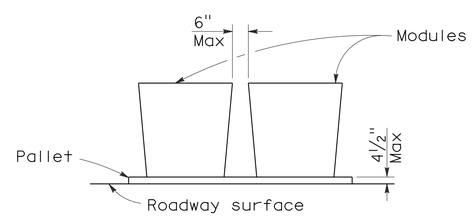

ELEVATION

CRASH CUSHION PALLET DETAIL

See Note 7

NOTES:

1. (XXX) Indicates sand filled module location and weight of sand in pounds for each module. Module spacing is based on the greater diameter of the module.
2. All sand weights are nominal.
3. Temporary crash cushion arrays shall not encroach on the traveled way.
4. Place the Type P marker panel so that the bottom of the panel rests upon the pallet.
5. Refer to Standard Plan A73B for marker details.
6. Approach speeds indicated conform to NCHRP 350 Report criteria.
7. Use of pallets is optional.

STATE OF CALIFORNIA
DEPARTMENT OF TRANSPORTATION

TEMPORARY CRASH CUSHION, SAND FILLED (BIDIRECTIONAL)

NO SCALE

RSP T1B DATED JUNE 6, 2008 SUPERSEDES STANDARD PLAN T1B
DATED MAY 1, 2006 - PAGE 212 OF THE STANDARD PLANS BOOK DATED MAY 2006.

REVISED STANDARD PLAN RSP T1B

2006 REVISED STANDARD PLAN RSP T1B

5-15-08

DIST	COUNTY	ROUTE	POST MILES TOTAL PROJECT	SHEET NO.	TOTAL SHEETS
03, 08	Sac, SBd	5, 15	23.3, R107.3	63	330

Randell D. Hiatt
REGISTERED CIVIL ENGINEER

June 6, 2008
PLANS APPROVAL DATE

REGISTERED PROFESSIONAL ENGINEER
Randell D. Hiatt
No. C50200
Exp. 6-30-09
CIVIL
STATE OF CALIFORNIA

The State of California or its officers or agents shall not be responsible for the accuracy or completeness of electronic copies of this plan sheet.

To accompany plans dated 9-16-13

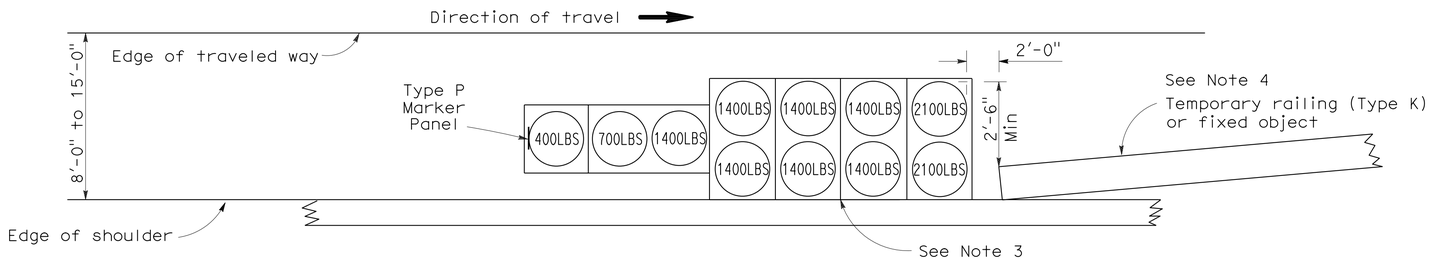

ARRAY 'TS11'

Approach speed less than 45 mph
See Note 9

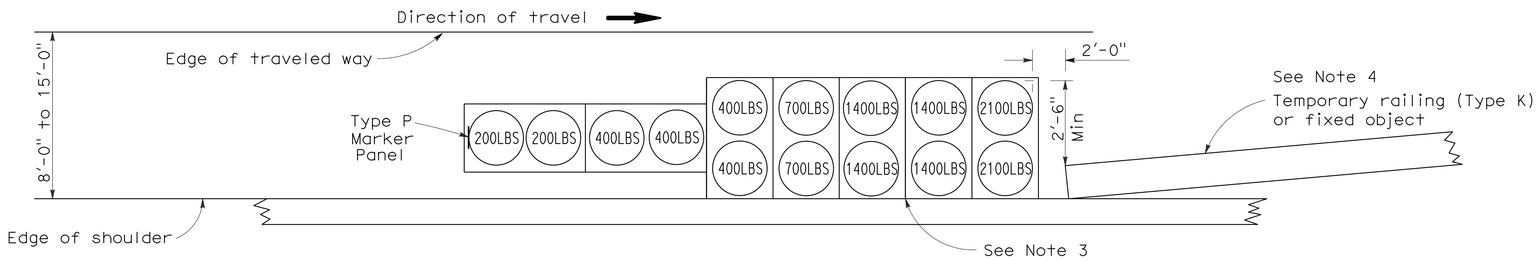

ARRAY 'TS14'

Approach speed 45 mph or more
See Note 9

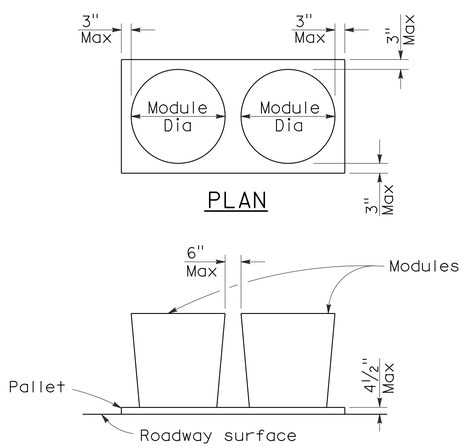

CRASH CUSHION PALLET DETAIL

See Note 11

NOTES:

1. (XXX) Indicates sand filled module location and weight of sand in pounds for each module. Module spacing is based on the greater diameter of the module.
2. All sand weights are nominal.
3. The temporary crash cushion arrays shown on this plan shall be used only in locations where there will be traffic on one side of the temporary crash cushion array.
4. If the fixed object or approach end of the temporary railing is less than 15'-0" from the edge of traveled way, a temporary crash cushion is required in a construction or work zone.
5. Temporary crash cushion arrays shall not encroach on the traveled way.
6. Arrays for median shoulders shall conform to details shown on this plan for outside shoulders.
7. Place the Type P marker panel so that the bottom of the panel rests upon the pallet and faces traffic.
8. Refer to Standard Plan A73B for marker details.
9. For shoulder widths less than 8'-0", appropriate approved crash cushion protection, other than sand filled modules, shall be provided at fixed objects and at approach ends of temporary railing. The specific type of crash cushion shall be as shown on the project plans or as specified in the Special Provisions, or if not shown on the project plans or specified in the Special Provisions, shall be as approved by the Engineer.
10. Approach speeds indicated conform to NCHRP 350 Report criteria.
11. Use of pallets is optional.

STATE OF CALIFORNIA
DEPARTMENT OF TRANSPORTATION

TEMPORARY CRASH CUSHION, SAND FILLED (SHOULDER INSTALLATIONS)

NO SCALE

RSP T2 DATED JUNE 6, 2008 SUPERSEDES STANDARD PLAN T2
DATED MAY 1, 2006 - PAGE 213 OF THE STANDARD PLANS BOOK DATED MAY 2006.

REVISED STANDARD PLAN RSP T2

2006 REVISED STANDARD PLAN RSP T2

Dist	COUNTY	ROUTE	POST MILES TOTAL PROJECT	SHEET No.	TOTAL SHEETS
03, 08	Sac, SBd	5, 15	23.3, R107.3	64	330

Randell D. Hiatt
REGISTERED CIVIL ENGINEER

May 20, 2011
PLANS APPROVAL DATE

REGISTERED PROFESSIONAL ENGINEER
Randell D. Hiatt
No. C50200
Exp. 6-30-11
CIVIL
STATE OF CALIFORNIA

The State of California or its officers or agents shall not be responsible for the accuracy or completeness of electronic copies of this plan sheet.

To accompany plans dated 9-16-13

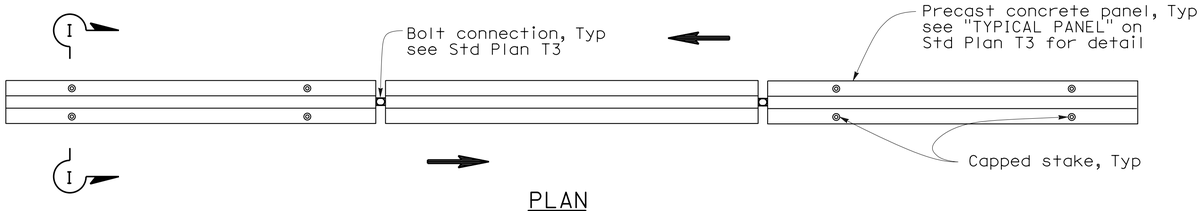

PLAN

RAILING STAKING CONFIGURATION FOR TWO-WAY TRAFFIC

See Note 1

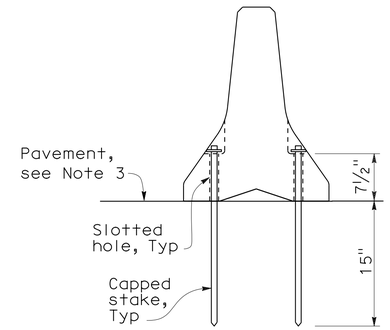

SECTION I-I

NOTES:

1. Where Type K Temporary Railing is placed as a temporary or long term barrier in two-way traffic on highways with less than 24" from the edge of traveled way, use four capped stakes per every other panel with end panels staked.
2. Where Type K Temporary Railing is placed 3" to 24" from the edge of an excavation on highways, use two capped stakes per panel along the traffic side.
3. Staked Type K Temporary Railing must be supported by at least 4" thick concrete, hot mix asphalt or existing asphalt concrete pavement.
4. The minimum yield strength for the washer must be 60,000 psi.
5. Direction of adjacent traffic indicated by ⟹.

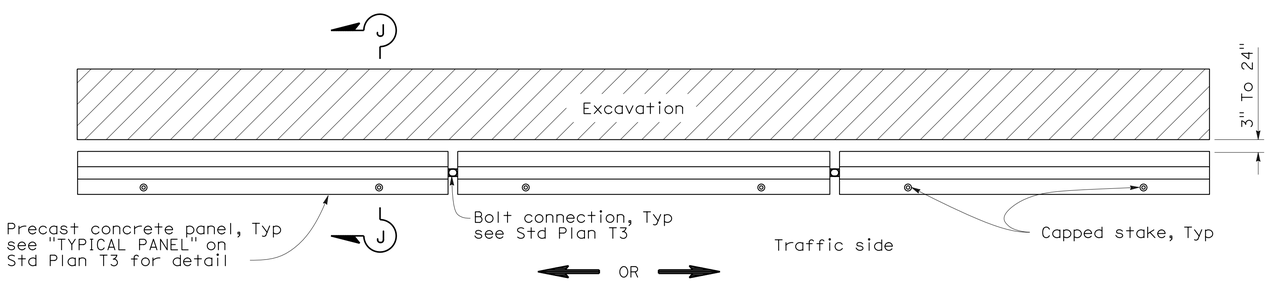

PLAN

RAILING STAKING CONFIGURATION ADJACENT TO AN EXCAVATION

See Note 2

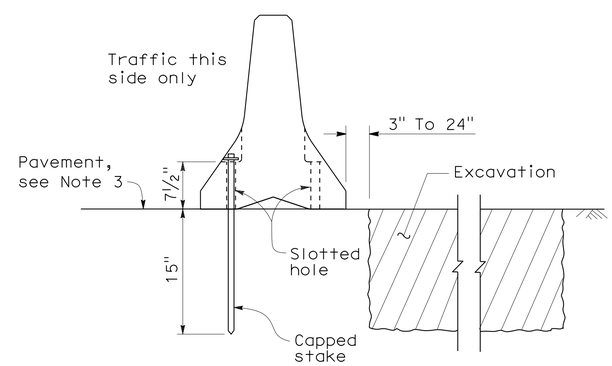

SECTION J-J

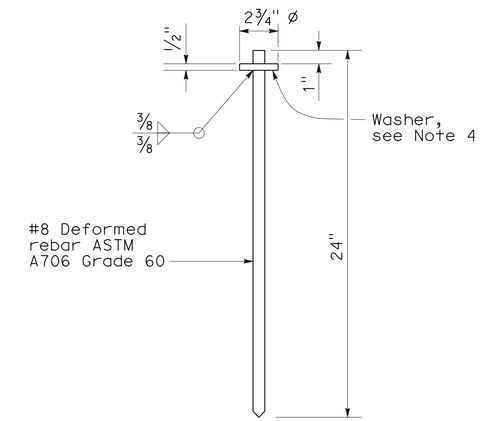

CAPPED STAKE DETAIL

STATE OF CALIFORNIA
DEPARTMENT OF TRANSPORTATION

TEMPORARY RAILING (TYPE K)

NO SCALE

NSP T3A DATED MAY 20, 2011 SUPPLEMENTS THE STANDARD PLANS BOOK DATED MAY 2006.

NEW STANDARD PLAN NSP T3A

2006 NEW STANDARD PLAN NSP T3A

DIST	COUNTY	ROUTE	POST MILES TOTAL PROJECT	SHEET NO.	TOTAL SHEETS
03, 08	Sac, SBd	5, 15	23.3, R107.3	65	330

LICENSED LANDSCAPE ARCHITECT

April 3, 2009
PLANS APPROVAL DATE

LICENSED LANDSCAPE ARCHITECT — Robert B. Schott 3695 — Registration Date 11-30-10 — Renewal Date 2-25-09 — Date — STATE OF CALIFORNIA

The State of California or its officers or agents shall not be responsible for the accuracy or completeness of electronic copies of this plan sheet.

To accompany plans dated 9-16-13

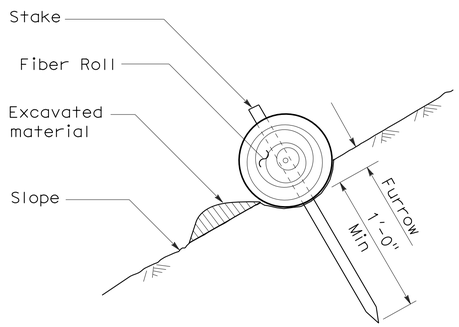

SECTION

TEMPORARY FIBER ROLL (TYPE 1)

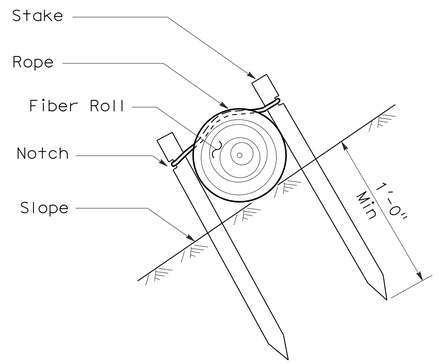

SECTION

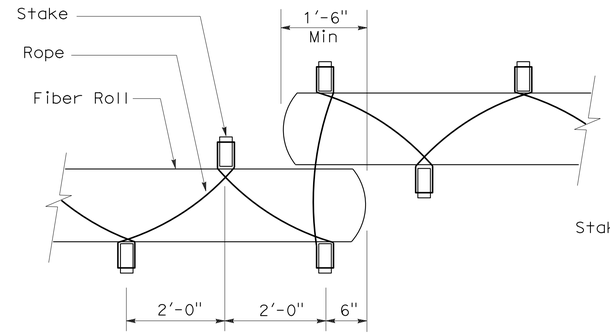

PLAN

TEMPORARY FIBER ROLL (TYPE 2)

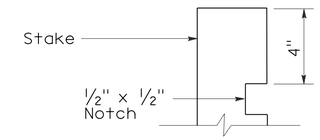

ELEVATION

STAKE NOTCH DETAIL

NOTES:

1. Temporary fiber roll spacing varies depending upon slope inclination.
2. Installations shown in the perspectives are for slope inclination of 10:1 and steeper.

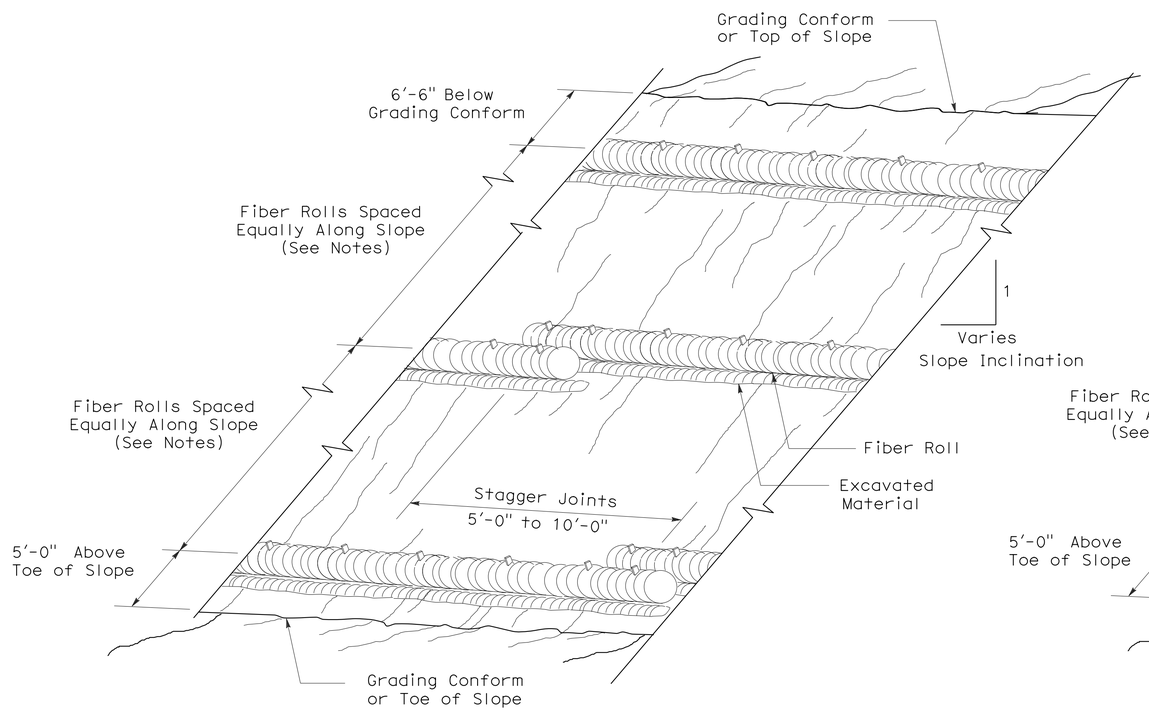

PERSPECTIVE

TEMPORARY FIBER ROLL (TYPE 1)

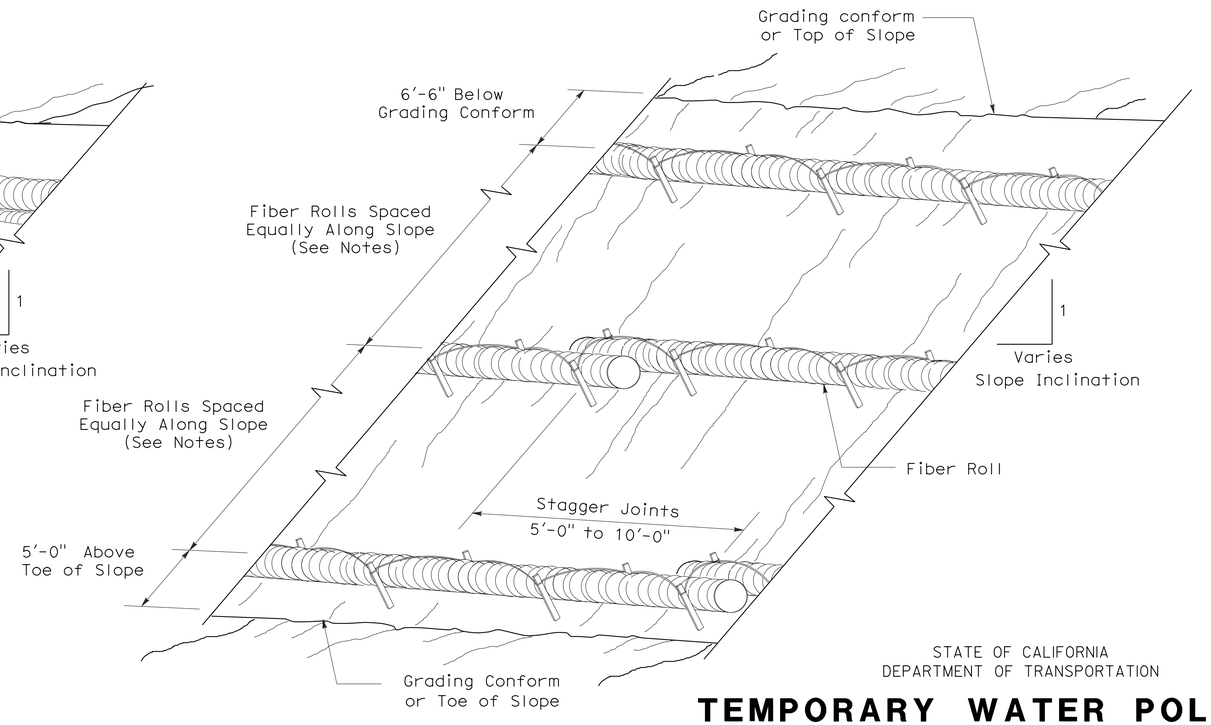

PERSPECTIVE

TEMPORARY FIBER ROLL (TYPE 2)

STATE OF CALIFORNIA
DEPARTMENT OF TRANSPORTATION

TEMPORARY WATER POLLUTION CONTROL DETAILS (TEMPORARY FIBER ROLL)

NO SCALE

RSP T56 DATED APRIL 3, 2009 SUPERSEDES STANDARD PLAN T56
DATED MAY 1, 2006 - PAGE 232 OF THE STANDARD PLANS BOOK DATED MAY 2006.

REVISED STANDARD PLAN RSP T56

2006 REVISED STANDARD PLAN RSP T56

2-23-09

DIST	COUNTY	ROUTE	POST MILES TOTAL PROJECT	SHEET NO.	TOTAL SHEETS
03, 08	Sac, SBd	5, 15	23.3, R107.3	66	330

REGISTERED CIVIL ENGINEER

October 5, 2007
PLANS APPROVAL DATE

REGISTERED PROFESSIONAL ENGINEER Douglas J. Dunrud No. C47240 Exp. 12-31-07 CIVIL STATE OF CALIFORNIA

The State of California or its officers or agents shall not be responsible for the accuracy or completeness of electronic copies of this plan sheet.

To accompany plans dated 9-16-13

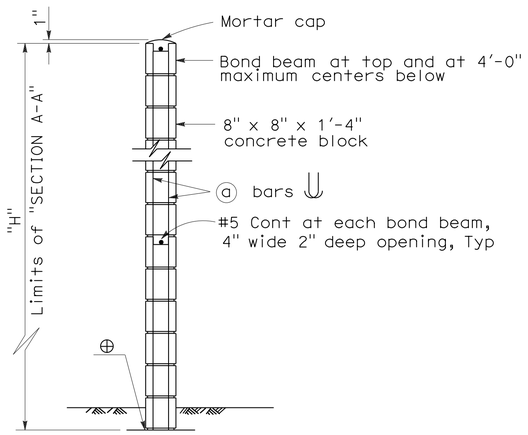

H=6'-0" THRU H=10'-0"

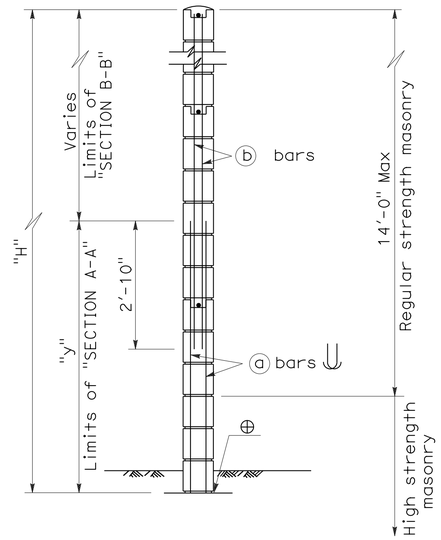

H=12'-0" THRU H=16'-0"

For details not shown, see H=6'-0" thru H=10'-0".

TYPICAL SECTION

⊕ Full mortar bed at bottom of wall

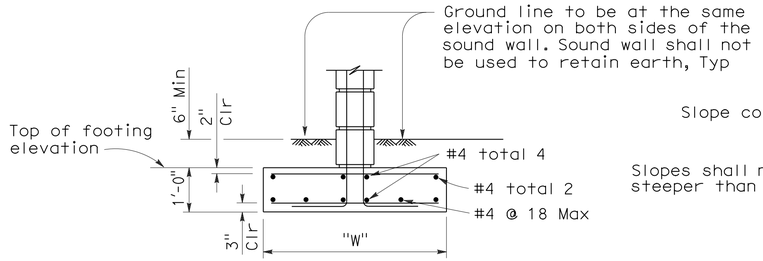

CASE 1

For details not shown, see Case 2. Level ground (±10%) on both sides of the sound wall.

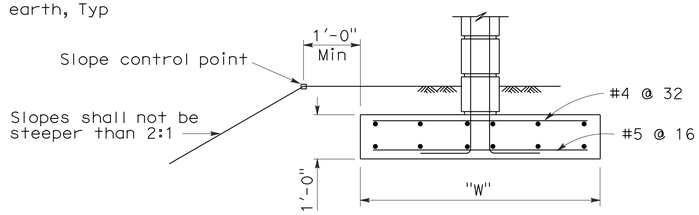

CASE 2

For details not shown, see Case 1. Level ground (±10%) on the traffic side of the sound wall and sloping ground on the opposite side.

SPREAD FOOTING SECTION

TRENCH FOOTING

Maximum H	CASE 1			CASE 2		Maximum H
	Ø = 25 Min	Ø = 30 Min	Ø = 35 Min	Ø = 30 Min	Ø = 35 Min	
	D	D	D	D	D	
6'-0"	5'-0"	4'-3"	3'-6"	6'-6"	5'-0"	6'-0"
8'-0"	6'-0"	5'-0"	4'-3"	7'-9"	6'-0"	8'-0"
10'-0"	6'-9"	5'-9"	5'-0"	8'-9"	6'-9"	10'-0"
12'-0"	7'-9"	6'-6"	5'-6"	9'-9"	7'-9"	12'-0"
14'-0"	8'-6"	7'-3"	6'-0"	10'-9"	8'-6"	14'-0"
16'-0"	9'-3"	7'-9"	6'-6"	11'-9"	9'-3"	16'-0"

Case 1 - Level ground (±10%) on both sides of the sound wall.

Case 2 - Level ground (±10%) on traffic side of the sound wall and sloping ground on opposite side.

SOUND WALL REINFORCEMENT TABLE

Maximum H	ⓐ bars @ 1'-4" Max	ⓑ bars @ 1'-4" Max	"y"	f'm (psi)	Compressive Strength of CMU (psi)	Maximum H
6'-0"	#4	———	———	1500	1900	6'-0"
8'-0"	#4	———	———	1500	1900	8'-0"
10'-0"	#4	———	———	1500	1900	10'-0"
12'-0"	#5	#4	6'-0"	1500	1900	12'-0"
14'-0"	#6	#4	8'-0"	1500	1900	14'-0"
16'-0"	#6	#4	10'-0"	2000	2800	16'-0"

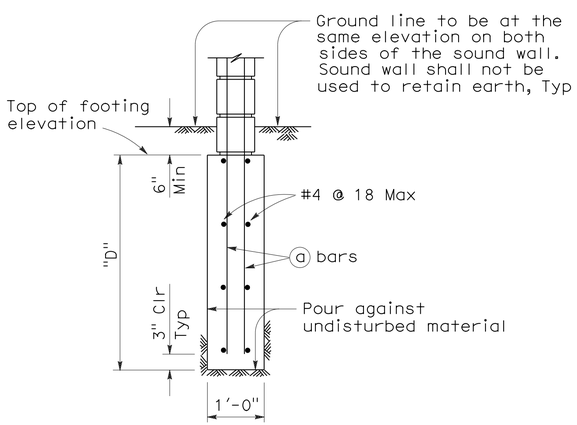

CASE 1

For details not shown, see Case 2. Level ground (±10%) on both sides of the sound wall.

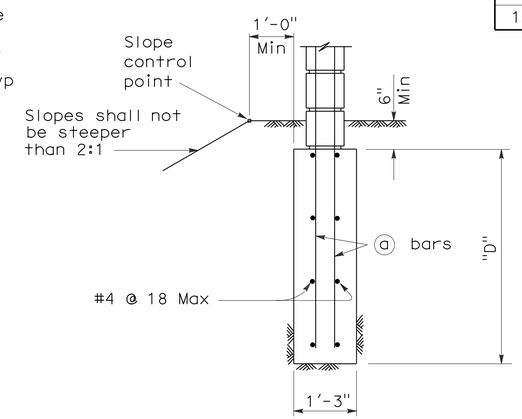

CASE 2

For details not shown, see Case 1. Level ground (±10%) on one side of the sound wall and sloping ground on the opposite side.

TRENCH FOOTING SECTION

SPREAD FOOTING

Maximum H	W
6'-0"	3'-0"
8'-0"	4'-0"
10'-0"	5'-0"
12'-0"	5'-9"
14'-0"	6'-6"
16'-0"	7'-6"

GENERAL NOTES:

A. For type of block and joint finish, see other sheets.

B. When blocks are laid in stacked bond, ladder type, galvanized joint reinforcement shall be provided. A minimum of 2-9 gauge wires continuous at 4'-0" maximum to be used. Locate reinforcement in joints that are at the approximate midpoint between bond and beams.

C. Horizontal joints shall be tooled concave or may be weathered. Vertical joints shall be tooled concave or may be raked.

D. For intermediate wall heights that are between the "H's" given, use the tabular information for the next higher "H".

E. Masonry strengths are listed in the "SOUND WALL REINFORCEMENT TABLE".

STATE OF CALIFORNIA
DEPARTMENT OF TRANSPORTATION

SOUND WALL MASONRY BLOCK ON FOOTING DETAILS (1)

NO SCALE

RSP B15-1 DATED OCTOBER 5, 2007 SUPERSEDES STANDARD PLAN B15-1 DATED MAY 1, 2006 - PAGE 291 OF THE STANDARD PLANS BOOK DATED MAY 2006.

REVISED STANDARD PLAN RSP B15-1

2006 REVISED STANDARD PLAN RSP B15-1

DIST	COUNTY	ROUTE	POST MILES TOTAL PROJECT	SHEET NO.	TOTAL SHEETS
03, 08	Sac, SBd	5, 15	23.3, R107.3	67	330

REGISTERED ELECTRICAL ENGINEER

October 5, 2007
PLANS APPROVAL DATE

REGISTERED PROFESSIONAL ENGINEER Jeffery G. McRae No. E14512 Exp. 6-30-08 ELECTRICAL STATE OF CALIFORNIA

The State of California or its officers or agents shall not be responsible for the accuracy or completeness of electronic copies of this plan sheet.

To accompany plans dated 9-16-13

ELECTROLIERS

STANDARD TYPES
15, 15D
15 STRUCTURE
21, 21D STRUCTURE
30
31
32
35
36-20A

High mast light pole

Double Arm lighting standard

Existing electrolier

Electrolier foundation (Future installation)

NOTES:

1. Luminaires shall be 310 W HPS when installed on Type 21, 21D, 30, 31, 32, 35 and 36-20A Standards, unless otherwise specified. Luminaires shall be 200 W HPS when installed on other type standards or poles, unless otherwise specified.
2. Luminaires shall be the cutoff type, ANSI Type Ⅲ medium cutoff lighting distribution, unless otherwise specified.
3. Variations noted adjacent to symbol on project plans.

Electrolier (see project notes or project plans)

Luminaire on wood pole

STANDARD NOTES:

- AB — Abandon. If applied to conduit, remove conductors.
- BC — Install pull box in existing conduit run.
- BP — Pedestrian barricade, type as indicated on plan.
- CB — Install conduit into existing pull box.
- CC — Connect new and existing conduit. Remove existing conductors and install conductors as indicated.
- CF — Conduit to remain for future use. Remove conductors. Install pull wire or rope.
- DH — Detector handhole.
- FA — Foundation to be abandoned.
- IS — Install sign on signal mast arm.
- NS — No slip base on standard.
- PEC — Photoelectric control.
- PEU — Photoelectric unit.
- RC — Equipment or material to be removed and become the property of the Contractor.
- RE — Remove electrolier, fuses and ballast. Tape ends of conductors.
- RL — Relocate equipment.
- RR — Remove and reuse equipment.
- RS — Remove and salvage equipment.
- SC — Splice new to existing conductors.
- SD — Service disconnect.
- SF — Standard to remain for future use. Remove luminaire, pole conductors, fuses and ballast.
- TSP — Telephone service point.

ABBREVIATIONS AND EQUIPMENT DESIGNATIONS

PROPOSED	EXISTING	
BBS	bbs	Battery backup system
BC	bc	Bolt circle
C	C	Conduit
CCTV	cctv	Closed circuit television
CKT	ckt	Circuit
CMS	cms	Changeable message sign
DLC	dlc	Loop detector lead-in cable
EMS	ems	Extinguishable message sign
EVC	evc	Emergency vehicle cable
EVD	evd	Emergency vehicle detector
FB	fb	Flashing beacon
FBCA	fbca	Flashing beacon control assembly
FBS	fbs	Flashing beacon with slip base
FO	fo	Fiber optic
G	G	Ground (Equipment Grounding Conductor)
GFCI	GFCI	Ground fault circuit interrupt
HAR	har	Highway advisory radio
HEX	hex	Hexagonal
HPS	hps	High pressure sodium
IISNS	iisns	Internally illuminated street name sign
ISL	isl	Induction sign lighting
LED	led	Light emitting diode
LMA	lma	Luminaire mast arm
LPS	lps	Low pressure sodium
LTG	ltg	Lighting
LUM	lum	Luminaire
MAT	mat	Mast arm mounting vehicle signal faces, top attachment
MAS	mas	Mast arm mounting vehicle signal faces, side attachment
MAS-4A	mas-4A	Mast arm mounting vehicle signal faces, side attachment - 4 signal section
MAS-4B	mas-4B	
MAS-4C	mas-4C	
MAS-5A	mas-5A	Mast arm mounting vehicle signal faces, side attachment - 5 signal section
MAS-5B	mas-5B	
MC	mc	Mercury contactor
M/M	m/m	Multiple to multiple transformer
MT	mt	Conduit with pull wire or rope only
MTG	mtg	Mounting
	mv	Mercury vapor lighting fixture
N	N	Neutral (Grounded Conductor)
NC	NC	Normally closed
NO	NO	Normally open
PB	pb	Pull box
PEC	pec	Photoelectric control (Type Ⅰ, Ⅱ, Ⅲ, Ⅳ or Ⅴ as shown)
PED	ped	Pedestrian
PEU	peu	Photoelectric unit
PPB	ppb	Pedestrian push button
RL		Relocated equipment
RM	rm	Ramp metering
SB	sb	Slip base
SIC	sic	Signal interconnect cable
SIG	sig	Signal
SMA	sma	Signal mast arm
SNS	sns	Street name sign
SP	sp	Service point
TDC	tdc	Telephone demarcation cabinet
TMS	tms	Traffic monitoring station
TOS	tos	Traffic Operations System
VEH	veh	Vehicle
XFMR	xfmr	Transformer
COMM	comm	Communication
RWIS	rwis	Roadway weather information system

SOFFIT AND WALL MOUNTED LUMINAIRES

Pendant, 70 W HPS unless otherwise specified.

Flush, 70 W HPS unless otherwise specified.

Wall surface, 70 W HPS unless otherwise specified.

Existing soffit or wall luminaire to remain unmodified.

Existing soffit or wall luminaire to be modified as specified.

NOTE:

Arrow indicates "street side" of luminaire.

STATE OF CALIFORNIA
DEPARTMENT OF TRANSPORTATION

ELECTRICAL SYSTEMS (SYMBOLS AND ABBREVIATIONS)

NO SCALE

RSP ES-1A DATED OCTOBER 5, 2007 SUPERSEDES STANDARD PLAN ES-1A DATED MAY 1, 2006 - PAGE 400 OF THE STANDARD PLANS BOOK DATED MAY 2006.

REVISED STANDARD PLAN RSP ES-1A

2006 REVISED STANDARD PLAN RSP ES-1A

DIST	COUNTY	ROUTE	POST MILES TOTAL PROJECT	SHEET NO.	TOTAL SHEETS
03, 08	Sac, SBd	5, 15	23.3, R107.3	68	330

REGISTERED ELECTRICAL ENGINEER

October 5, 2007
PLANS APPROVAL DATE

REGISTERED PROFESSIONAL ENGINEER Jeffery G. McRae No. E14512 Exp. 6-30-08 ELECTRICAL STATE OF CALIFORNIA

The State of California or its officers or agents shall not be responsible for the accuracy or completeness of electronic copies of this plan sheet.

To accompany plans dated 9-16-13

LOOP INSTALLATION PROCEDURE

1. Loops shall be centered in lanes.
2. Saw slots in pavement for loop conductors as shown in details.
3. Distance between side of loop and a lead-in saw cut from adjacent detectors shall be 2'-0" minimum. Distance between lead-in saw cuts shall be 6" minimum.
4. Bottom of saw slot shall be smooth with no sharp edges.
5. Slots shall be washed until clean, blown out and thoroughly dried before installing loop conductors.
6. Adjacent loops on the same sensor unit channel shall be wound in opposite directions.
7. Identify and tag loop circuit pairs in the pull box with loop number, start (S) and finish (F) of conductor. Identify and tag lead-in-cable with sensor number and phase.
8. Install loop conductor in slot using a 3/16" to 1/4" thick wood paddle. Hold loop conductors with wood paddles (at the bottom of the sawed slot) during sealant placement.
9. No more than 2 twisted pairs shall be installed in one sawed slot.
10. Allow additional 5'-0" of slack length of conductor for the lead-in run to pull box.
11. The additional length of each conductor for each loop shall be twisted together into a pair (6 turns per 3'-4" minimum) before being placed in the slot and conduit leading to pull box.
12. Test each loop circuit for continuity, circuit resistance and insulation resistance at the pull box before filling slots.
13. Fill slots as shown in details.
14. Splice loop conductors to lead-in-cable. Splices shall be soldered.
15. End of lead-in-cable and Type 2 loop conductor shall be waterproofed prior to installing in conduit to prevent moisture from entering the cable.
16. Lead-in-cable shall not be spliced between the pull box and the controller cabinet terminals.
17. Test each loop circuit for continuity, circuit resistance and insulation resistance at the controller cabinet location.
18. Where loop conductors are not to be spliced to a lead-in-cable, the ends of the conductors shall be taped and waterproofed with electrical insulating coating.

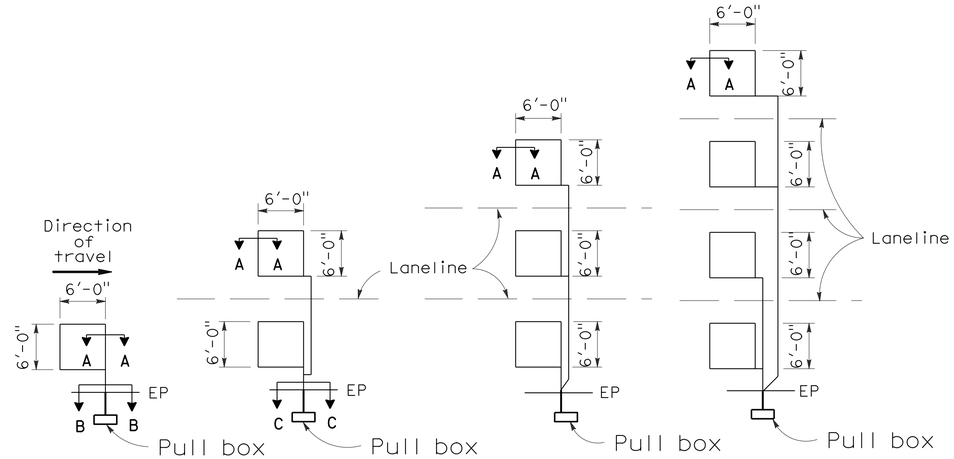

TYPE 1A INSTALLATION | TYPE 2A INSTALLATION | TYPE 3A INSTALLATION | TYPE 4A INSTALLATION

SAWCUT DETAILS

(Type A loop detector configurations illustrated)

1. 1A thru 4A = 1 Type A loop configuration in each lane.
2. 1B thru 4B = 1 Type B loop configuration in each lane.
3. 1C = 1 Type C loop configuration entering lanes as required.
4. 1D thru 4D = 1 Type D loop configuration in each lane.
5. 1E thru 4E = 1 Type E loop configuration in each lane.
6. 1Q thru 4Q = 1 Type Q loop configuration in each lane.
   (Use Type A, B, C, D, E or Q loop detector configurations only when specified or shown on plans)

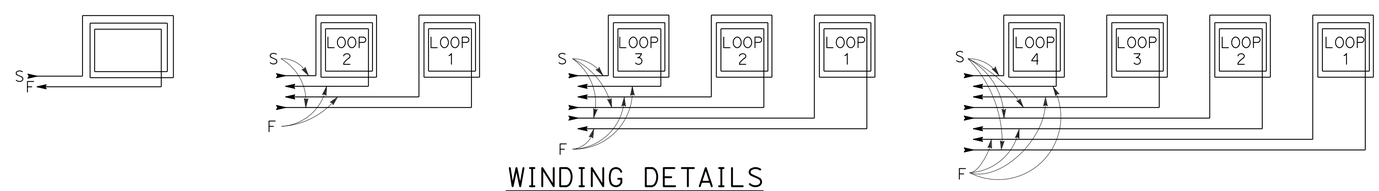

WINDING DETAILS

See Notes 6 and 7

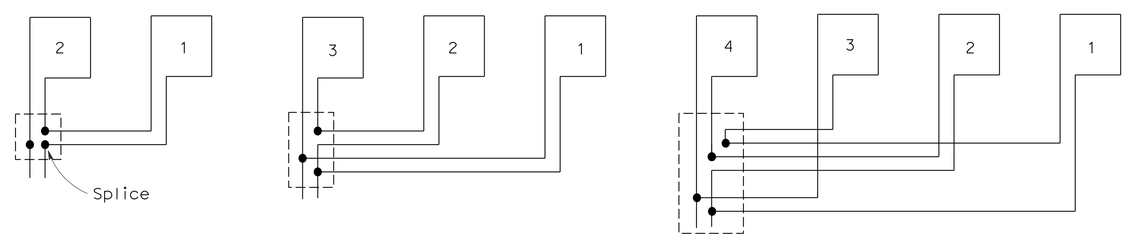

TYPICAL LOOP CONNECTIONS

(Dashed lines represent the pull box)

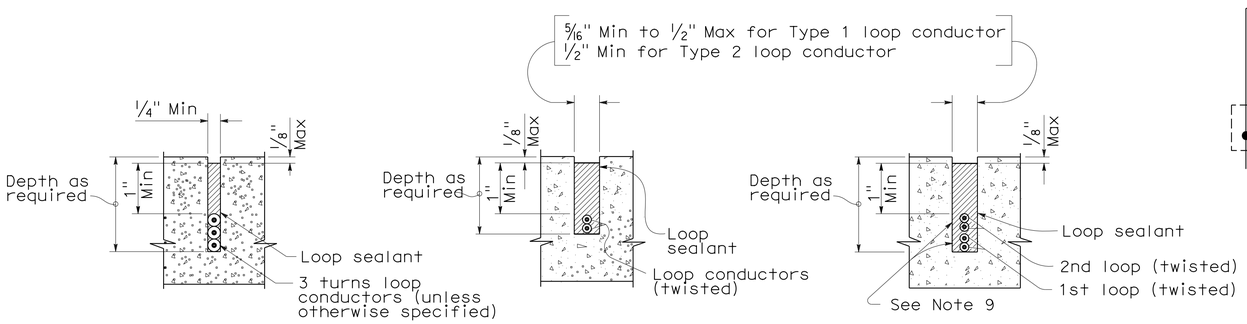

SECTION A-A | SECTION B-B | SECTION C-C

SLOT DETAILS - TYPE 1 AND TYPE 2 LOOP CONDUCTOR

STATE OF CALIFORNIA
DEPARTMENT OF TRANSPORTATION

ELECTRICAL SYSTEMS (DETECTORS)

NO SCALE

RSP ES-5A DATED OCTOBER 5, 2007 SUPERCEDES STANDARD PLAN ES-5A DATED MAY 1, 2006 - PAGE 423 OF THE STANDARD PLANS BOOK DATED MAY 2006.

REVISED STANDARD PLAN RSP ES-5A

2006 REVISED STANDARD PLAN RSP ES-5A

8-17-07

DIST	COUNTY	ROUTE	POST MILES TOTAL PROJECT	SHEET NO.	TOTAL SHEETS
03, 08	Sac, SBd	5, 15	23.3, R107.3	69	330

REGISTERED CIVIL ENGINEER

October 5, 2007
PLANS APPROVAL DATE

REGISTERED PROFESSIONAL ENGINEER
Stanley P. Johnson
No. C57793
Exp. 3-31-08
CIVIL
STATE OF CALIFORNIA

The State of California or its officers or agents shall not be responsible for the accuracy or completeness of electronic copies of this plan sheet.

To accompany plans dated 9-16-13

2006 REVISED STANDARD PLAN RSP ES-6A

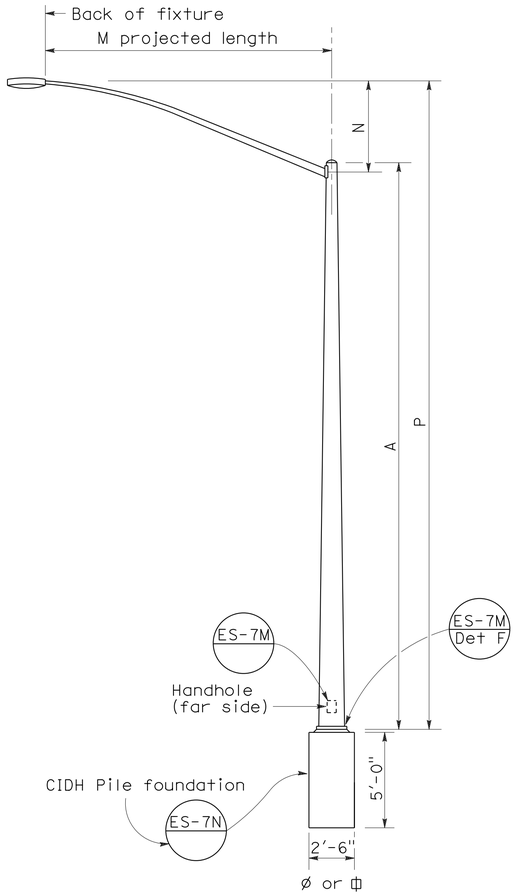

ELEVATION
TYPE 15 AND TYPE 21

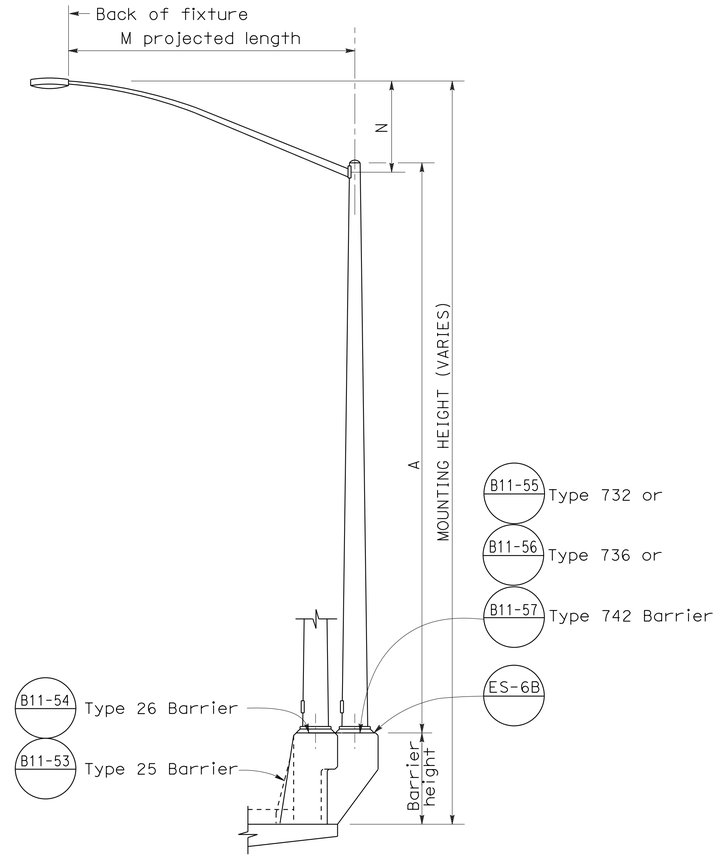

ELEVATION
TYPE 15 AND TYPE 21 BARRIER RAIL MOUNTED

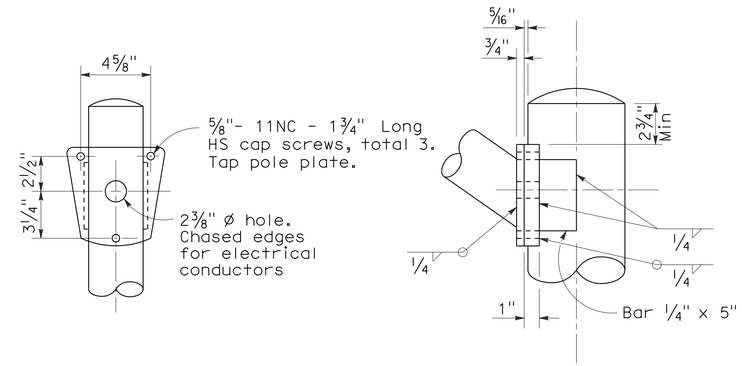

DETAIL R
LUMINAIRE ARM CONNECTION

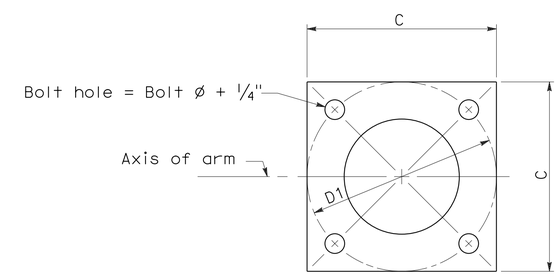

BASE PLATE

POLE TYPE	POLE DATA				BASE PLATE DATA				LUMINAIRE ARM
	A Height	Min OD Base	Min OD Top	Wall Thickness	C	D1 Bolt Circle	Thick-ness	Anchor Bolts Size	
15	30'	8"	3 7/8"	0.1196"	1'-0"	1'-0"	1"	1" ø x 3'-0" x 4"*	6' - 15' [12']
21	35'	8 5/8"	3 7/8"	0.1196"	1'-0"	1'-0"	1"	1 1/4"ø x 3'-0" x 4"*	6' - 15' [12']

* For barrier rail bolts, see Standard Plan ES-6B.

LUMINAIRE ARM DATA					
M Projected Length	N Rise	Min OD At Pole	Nominal Thickness	P Type 15	P Type 21
6'-0"	2'-0"±	3 1/4"	0.1196"	31'-6"±	36'-6"±
8'-0"	2'-6"±	3 1/2"	0.1196"	32'-0"±	37'-0"±
10'-0"	3'-3"±	3 7/8"	0.1196"	32'-9"±	37'-9"±
12'-0"	4'-3"±	3 7/8"	0.1196"	33'-9"±	38'-9"±
15'-0"	4'-9"±	4 1/4"	0.1196"	34'-3"±	39'-3"±

NOTES:

1. ☐ Indicates arm length to be used unless otherwise noted on the plans.
2. For Type 15-SB, use Type 15 standard with Type 30 slip base plate details, see Standard Plan ES-6F.
3. For additional notes, see Standard Plan ES-7M and ES-7N.

STATE OF CALIFORNIA
DEPARTMENT OF TRANSPORTATION

ELECTRICAL SYSTEMS (LIGHTING STANDARD TYPES 15 AND 21)

NO SCALE

RSP ES-6A DATED OCTOBER 5, 2007 SUPERCEDES STANDARD PLAN ES-6A DATED MAY 1, 2006 - PAGE 427 OF THE STANDARD PLANS BOOK DATED MAY 2006.

REVISED STANDARD PLAN RSP ES-6A

DIST	COUNTY	ROUTE	POST MILES TOTAL PROJECT	SHEET NO.	TOTAL SHEETS
03, 08	Sac, SBd	5, 15	23.3, R107.3	70	330

REGISTERED ELECTRICAL ENGINEER

January 20, 2012
PLANS APPROVAL DATE

REGISTERED PROFESSIONAL ENGINEER Jeffery G. McRae No. E14512 Exp. 6-30-12 ELECTRICAL STATE OF CALIFORNIA

The State of California or its officers or agents shall not be responsible for the accuracy or completeness of electronic copies of this plan sheet.

To accompany plans dated 9-16-13

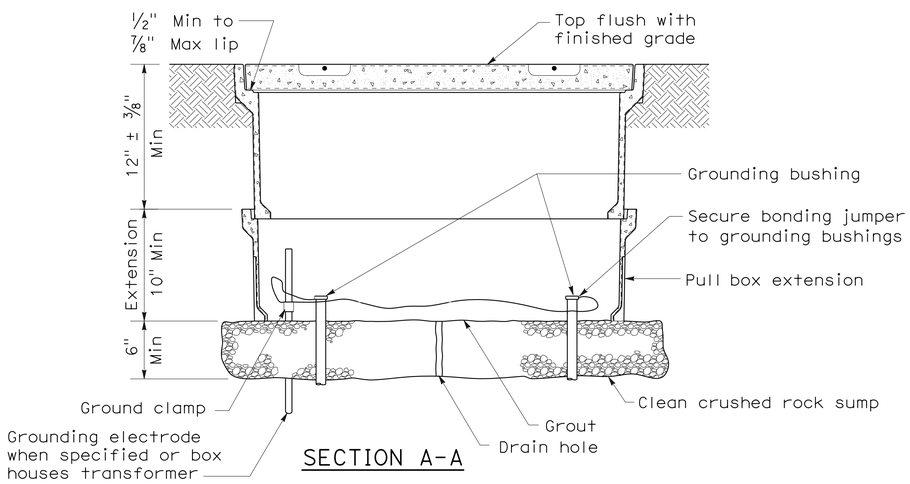

SECTION A-A

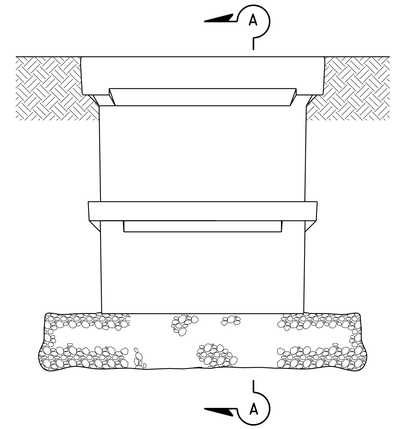

SIDE VIEW

INSTALLATION DETAILS

DETAIL A

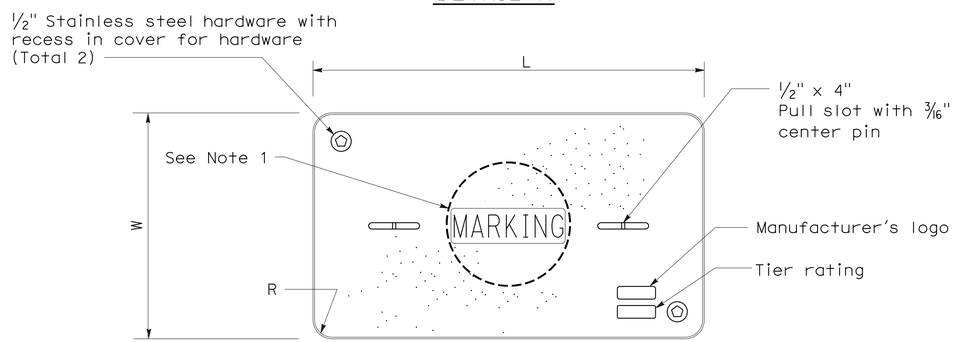

COVER TOP VIEW

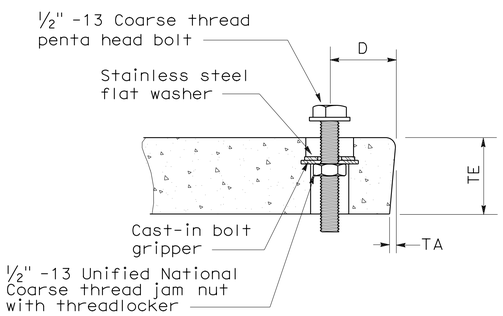

TYPICAL COVER CAPTIVE BOLT

(Or similar)

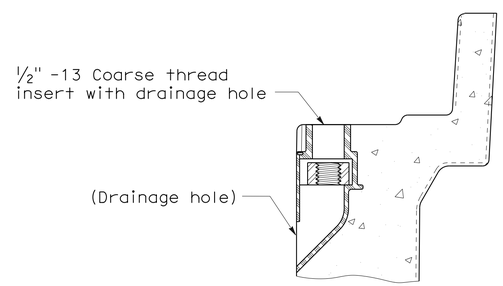

TYPICAL THREADED INSERT

(Or similar)

DIMENSION TABLE										
PULL BOX	PULL BOX			COVER						
	Minimum Depth Box	Minimum Depth Extension	Maximum Weight	L	W	R	TE	TA	D	Maximum Weight
No. 3 1/2	12"	N/A	40 lb	1' - 3 3/8"	10 1/8"	1 3/8"	2"	1/8"	1 3/4"	30 lb
No. 5	12"	10"	55 lb	1' - 11 1/4"	1' - 1 3/4"	1 3/8"	2"	1/8"	1 3/4"	60 lb
No. 6	12"	10"	70 lb	2' - 6 1/2"	1' - 5 1/2"	1 3/8"	2"	1/8"	2"	85 lb

NOTES ON PULL BOXES:

1. Pull box covers must be marked as follows: "SERVICE" Service circuits between service point and service disconnect; "SPRINKLER-CONTROL" sprinkler control circuits, 50 V or less; "CALTRANS" on all pull boxes, except pull boxes marked "SPRINKLER-CONTROL"; and "TELEPHONE" Telephone service;

   A) No. 3 1/2 pull box.
      1) "SIGNAL" - Traffic signal circuits with or without street or sign lighting circuits.
      2) "ST LIGHTING" - Street or sign lighting circuits where voltage is under 600 V.

   B) No. 5, 6, 9 or 9A pull box.
      1) "TRAFFIC SIGNAL" - Traffic signal circuits with or without street or sign lighting circuits.
      2) "STREET LIGHTING" - Street or sign lighting circuits where voltage is under 600 V.
      3) "STREET LIGHTING-HIGH VOLTAGE" - Street or sign lighting circuits where voltage is above 600 V.
      4) "IRRIGATION" - Circuits to irrigation controller 120 V or more.
      5) "RAMP METER" - Ramp meter circuits.
      6) "COUNT STATION" - Count or speed monitor circuits.
      7) "COMMUNICATIONS" - Communication circuits.
      8) "TOS COMMUNICATIONS" - TOS communication line.
      9) "TOS POWER" -TOS power.
      10) "TDC POWER" - Telephone demarcation cabinet power.
      11) "CCTV" - Closed circuit television circuits.
      12) "TMS" - Traffic monitoring station circuits.
      13) "CMS" - Changeable message sign circuits.
      14) "HAR" - Highway advisory radio circuits.

2. The nominal dimensions of the opening in which the cover sets must be the same as the cover dimensions (L and W) plus 1/8" or greater.

3. Covers and boxes must be interchangeable with California Standard. When interchanged with a standard, the top surfaces must be flush within 1/8". Top outside radius of covers and pull boxes must have a 1/8" radius.

4. Pull box extension may be another pull box as long as the bottom edge of the pull box can fit into the cover opening.

STATE OF CALIFORNIA
DEPARTMENT OF TRANSPORTATION

ELECTRICAL SYSTEMS (PULL BOX)

NO SCALE

NSP ES-8A DATED JANUARY 20, 2012 SUPPLEMENTS THE STANDARD PLANS BOOK DATED MAY 2006.

NEW STANDARD PLAN NSP ES-8A

2006 NEW STANDARD PLAN NSP ES-8A

DIST	COUNTY	ROUTE	POST MILES TOTAL PROJECT	SHEET NO.	TOTAL SHEETS
03, 08	Sac, SBd	5, 15	23.3, R107.3	71	330

REGISTERED ELECTRICAL ENGINEER

January 20, 2012
PLANS APPROVAL DATE

REGISTERED PROFESSIONAL ENGINEER Jeffery G. McRae No. E14512 Exp. 6-30-12 ELECTRICAL STATE OF CALIFORNIA

The State of California or its officers or agents shall not be responsible for the accuracy or completeness of electronic copies of this plan sheet.

To accompany plans dated 9-16-13

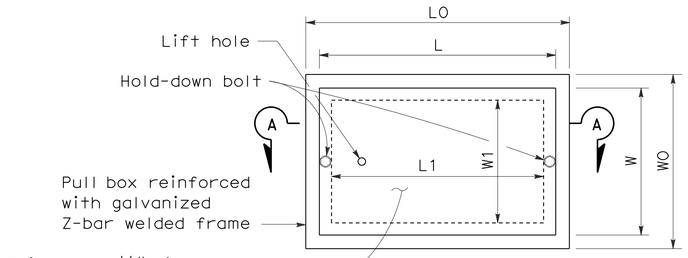

TOP VIEW

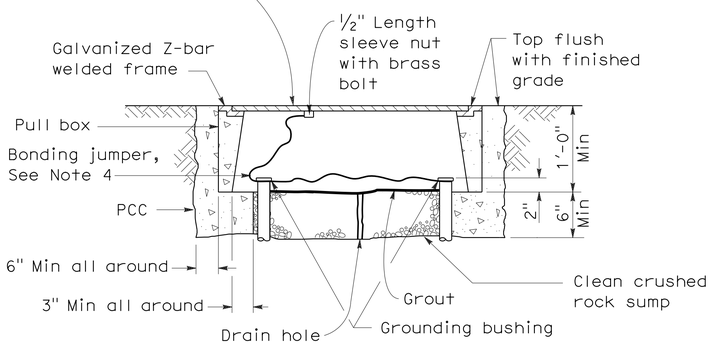

SECTION A-A

No. 3½(T), No. 5(T) AND No. 6(T) TRAFFIC PULL BOX

NOTES ON PULL BOXES:

1. Traffic pull box shall be provided with steel cover and special concrete footing. Steel cover shall have embossed non-skid pattern.
2. Steel reinforcing shall be as regularly used in the standard products of the respective manufacturer.
3. Pull box covers must be marked as follows: "SERVICE" Service circuits between service point and service disconnect; "SPRINKLER-CONTROL" Sprinkler control circuits, 50 V or less; "CALTRANS" On all pull boxes, except pull boxes marked "SPRINKLER-CONTROL"; and "TELEPHONE" Telephone service.
   A) No. 3½(T) pull box.
      1) "SIGNAL" - Traffic signal circuits with or without street or sign lighting circuits.
      2) "ST LIGHTING" - Street or sign lighting circuits where voltage is under 600 V.
   B) No. 5(T) or 6(T) pull box.
      1) "TRAFFIC SIGNAL" - Traffic signal circuits with or without street or sign lighting circuits.
      2) "STREET LIGHTING" - Street or sign lighting circuits where voltage is under 600 V.
      3) "STREET LIGHTING-HIGH VOLTAGE" - Street or sign lighting circuits where voltage is above 600 V.
      4) "IRRIGATION" - Circuits to irrigation controller 120 V or more.
      5) "RAMP METER" - Ramp meter circuits.
      6) "COUNT STATION" - Count or speed monitor circuits.
      7) "COMMUNICATION" - Communication circuits.
      8) "TOS COMMUNICATIONS" - TOS communications line.
      9) "TOS POWER" - TOS power.
      10) "TDC POWER" - Telephone demarcation cabinet power.
      11) "CCTV" - Closed circuit television circuits.
      12) "TMS" - Traffic monitoring station circuits.
      13) "CMS" - Changeable message sign circuits.
      14) "HAR" - Highway advisory radio circuits.
4. Bonding jumper for metal covers shall be 3' long, minimum.
5. The nominal dimensions of the opening in which the cover sets must be the same as the cover dimensions except the length and width dimensions shall be ⅛" greater.
6. Covers and boxes must be interchangeable with California standard male and female gages. When interchanged with a standard male or female gage, the top surfaces must be flush within ⅛".

DIMENSION TABLE

PULL BOX	BOX						COVER				
	Minimum * Thickness	Minimum Depth Box and Extension	WO	LO	L1	W1	L **	W **	R	Edge Thickness	Edge Taper
No. 3½(T)	1½"	1'-0"	1'-5"± 1"	1'-8⅞"±	1'-2½"±	10⅝"± 1"	1'-8"±	1'-1¾"±	0"	½"	None
No. 5(T)	1¾"	1'-0"	1'-11½"± 1"	2'-5½"±	1'-7"±	1'-1"± 1"	2'-3"±	1'-4"±	0"	½"	None
No. 6(T)	2"	1'-0"	2'-6"± 1"	2'-11½"±	1'-11½"±	1'-5"± 1"	2'-9"±	1'-8"±	0"	½"	None

* Excluding conduit web ** Top dimension

STATE OF CALIFORNIA
DEPARTMENT OF TRANSPORTATION

ELECTRICAL SYSTEMS (TRAFFIC RATED PULL BOX)

NO SCALE

NSP ES-8B DATED JANUARY 20, 2012 SUPPLEMENTS THE STANDARD PLANS BOOK DATED MAY 2006.

NEW STANDARD PLAN NSP ES-8B

2006 NEW STANDARD PLAN NSP ES-8B

DIST	COUNTY	ROUTE	POST MILES TOTAL PROJECT	SHEET NO.	TOTAL SHEETS
03, 08	Sac, SBd	5, 15	23.3, R107.3	72	330

REGISTERED ELECTRICAL ENGINEER

July 20, 2012
PLANS APPROVAL DATE

REGISTERED PROFESSIONAL ENGINEER
Jeffery G. McRae
No. E14512
Exp. 6-30-14
ELECTRICAL
STATE OF CALIFORNIA

The State of California or its officers or agents shall not be responsible for the accuracy or completeness of electronic copies of this plan sheet.

To accompany plans dated 9-16-13

ISOFOOTCANDLE CURVE - MINIMUM

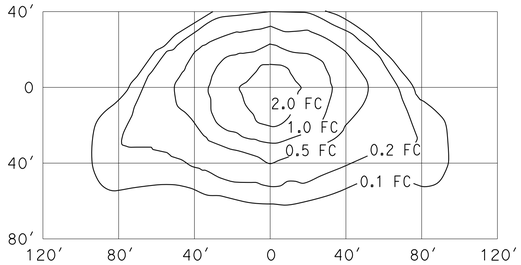

TYPE III MEDIUM CUTOFF

Cutoff Luminaire
34′ Mounting Height
Lamp operated at 22,000 lm
200-W high pressure sodium lamp
ANSI Designation S66

ISOFOOTCANDLE CURVE - MINIMUM

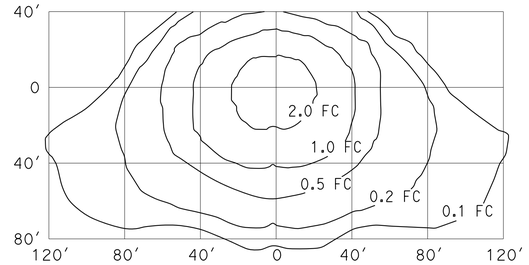

TYPE III MEDIUM CUTOFF

Cutoff Luminaire
40′ Mounting Height
Lamp operated at 37,000 lm
310-W high pressure sodium lamp
ANSI Designation S67

ISOFOOTCANDLE CURVE - MINIMUM

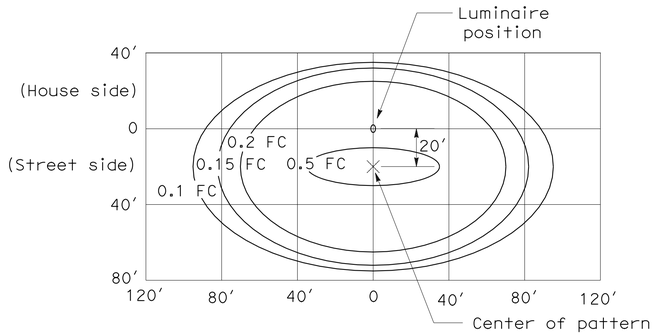

LED LUMINAIRE ROADWAY 1

200-W HPS Equivalent at 34′ Mounting Height

ISOFOOTCANDLE CURVE - MINIMUM

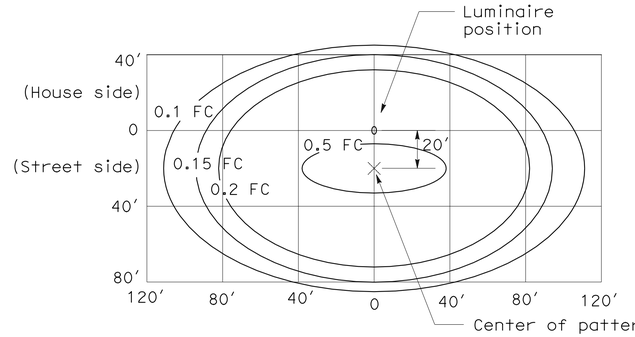

LED LUMINAIRE ROADWAY 2

310-W HPS Equivalent at 40′ Mounting Height

ISOFOOTCANDLE CURVE - MINIMUM

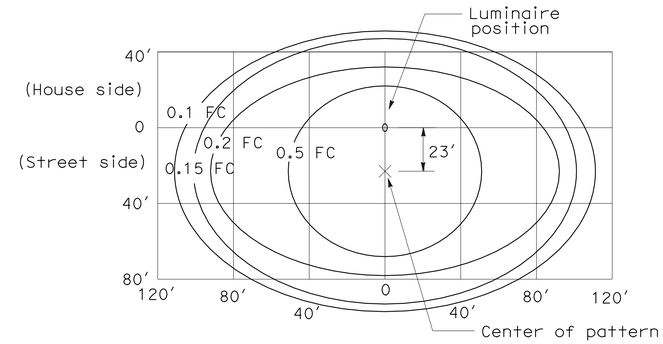

LED LUMINAIRE ROADWAY 4

400-W HPS Equivalent at 40′ Mounting Height

ISOFOOTCANDLE CURVE - MINIMUM

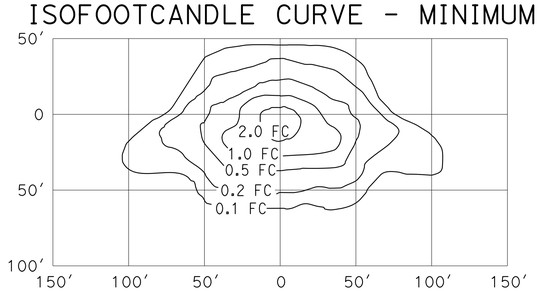

TYPE III MEDIUM CUTOFF

Cutoff Luminaire
30′ Mounting Height
Lamp operated at 16,000 lm
150-W high pressure sodium lamp
ANSI Designation S55

ISOFOOTCANDLE CURVE - MINIMUM

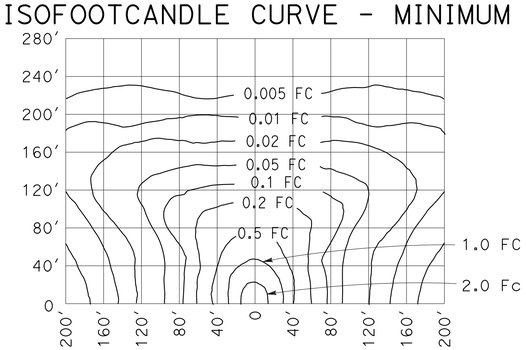

LOW PRESSURE SODIUM LUMINAIRE

40′ Mounting Height
Lamp operated at 33,000 lm
180-W low pressure sodium lamp

STATE OF CALIFORNIA
DEPARTMENT OF TRANSPORTATION

ELECTRICAL SYSTEMS (ISOFOOTCANDLE DIAGRAMS)

NO SCALE

NSP ES-10A DATED JULY 20, 2012 SUPPLEMENTS THE STANDARD PLANS BOOK DATED MAY 2006.

NEW STANDARD PLAN NSP ES-10A

2006 NEW STANDARD PLAN NSP ES-10A

2-16-12

DIST	COUNTY	ROUTE	POST MILES TOTAL PROJECT	SHEET NO.	TOTAL SHEETS
03, 08	Sac, SBd	5, 15	23.3, R107.3	73	330

Jeffery G. McRae
REGISTERED ELECTRICAL ENGINEER

July 20, 2012
PLANS APPROVAL DATE

REGISTERED PROFESSIONAL ENGINEER
Jeffery G. McRae
No. E14512
Exp. 6-30-14
ELECTRICAL
STATE OF CALIFORNIA

The State of California or its officers or agents shall not be responsible for the accuracy or completeness of electronic copies of this plan sheet.

To accompany plans dated 9-16-13

ISOFOOTCANDLE CURVE - MINIMUM

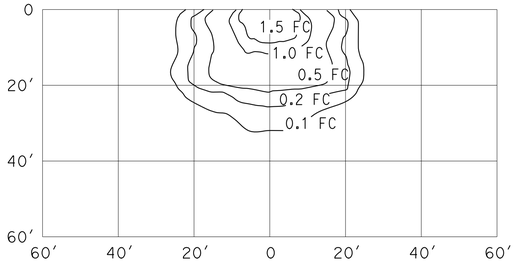

WALL LUMINAIRE

15′ Mounting Height
Lamp operated at 5,800 lm
70-W high pressure sodium lamp
ANSI Designation S62

ISOFOOTCANDLE CURVE - MINIMUM

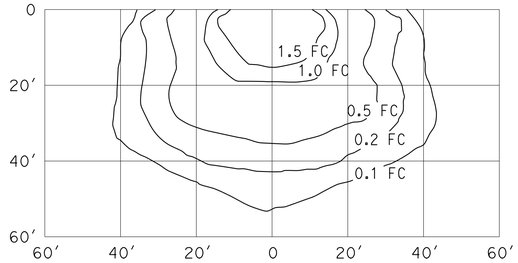

WALL LUMINAIRE

15′ Mounting Height
Lamp operated at 9,500 lm
100-W high pressure sodium lamp
ANSI Designation S54

ISOFOOTCANDLE CURVE - MINIMUM

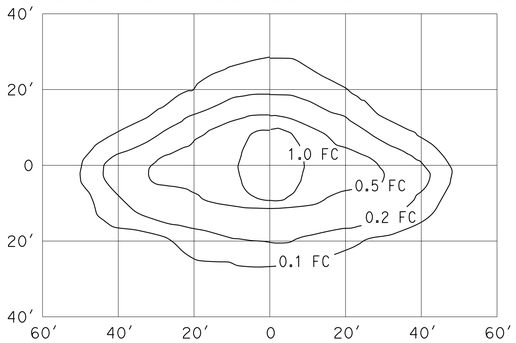

PENDANT SOFFIT LUMINAIRE
TYPE III SHORT

17′ Mounting Height
Lamp operated at 5,800 lm
70-W high pressure sodium lamp
ANSI Designation S62

ISOFOOTCANDLE CURVE - MINIMUM

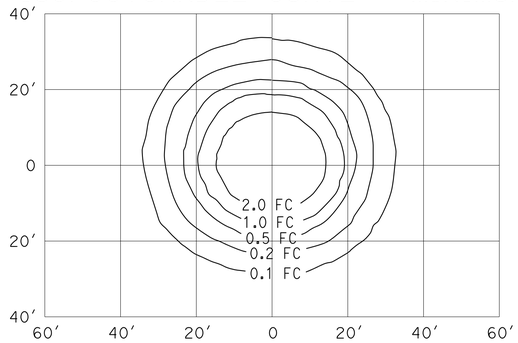

PENDANT SOFFIT LUMINAIRE

17′ Mounting Height
Lamp operated at 5,800 lm
70-W high pressure sodium lamp
ANSI Designation S62

ISOFOOTCANDLE CURVE - MINIMUM

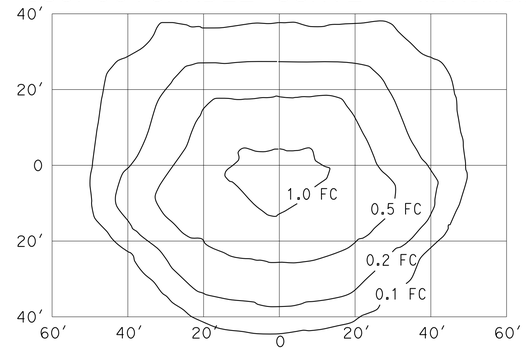

FLUSH SOFFIT LUMINAIRE

17′ Mounting Height
Lamp operated at 5,800 lm
70-W high pressure sodium lamp
ANSI Designation S62

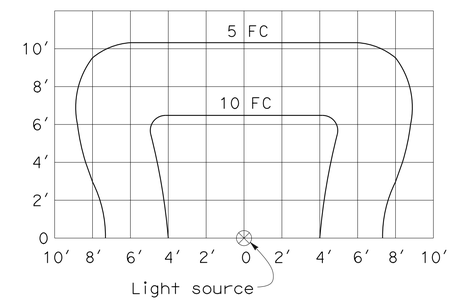

SIGN LIGHTING FIXTURE
ISOFOOTCANDLE DIAGRAM

NOTES:

1. Curves represent the minimum footcandle (FC) of initial illumination on a 10′-0" x 20′-0" panel.
2. The FC shown are with the fixture attached to the light fixture mounting channel which places the center of the source 4′-8" in front of panel and 1′-0" below the bottom edge.
3. Applicable lamp: 85-W fluorescent phosphor coated induction lamp.

STATE OF CALIFORNIA
DEPARTMENT OF TRANSPORTATION

ELECTRICAL SYSTEMS (ISOFOOTCANDLE DIAGRAMS)

NO SCALE

NSP ES-10B DATED JULY 20, 2012 SUPPLEMENTS THE STANDARD PLANS BOOK DATED MAY 2006.

NEW STANDARD PLAN NSP ES-10B

2006 NEW STANDARD PLAN NSP ES-10B

DIST.	COUNTY	ROUTE	POST MILES TOTAL PROJECT	SHEET NO.	TOTAL SHEETS
03, 08	Sac, SBd	5, 15	23.3, R107.3	74	330

LICENSED ARCHITECT DATE

LICENSED ARCHITECT JANUSZ PIETRZAK No. C-23915 Exp. 1/31/2015 STATE OF CALIFORNIA

9-16-13
PLANS APPROVAL DATE

The State of California or its officers or agents shall not be responsible for the accuracy or completeness of electronic copies of this plan sheet.

ACCESSIBILITY DESIGN APPROVAL STAMP DOT / DES / OTA

PROJECT ID **0800000229**

Reviewed by:

Date: 10-25-11

CALIFORNIA STATE FIRE MARSHAL APPROVED

Approval of this plan does not authorize or approve any omission or deviation from applicable regulations. Final approval is subject to field inspection. One set of approved plans shall be available on the project site at all times.

Reviewed by: FRANCIS SOLICH

Approval date: 09-11-13

CSMF FILE NO. 01-36-11-0049

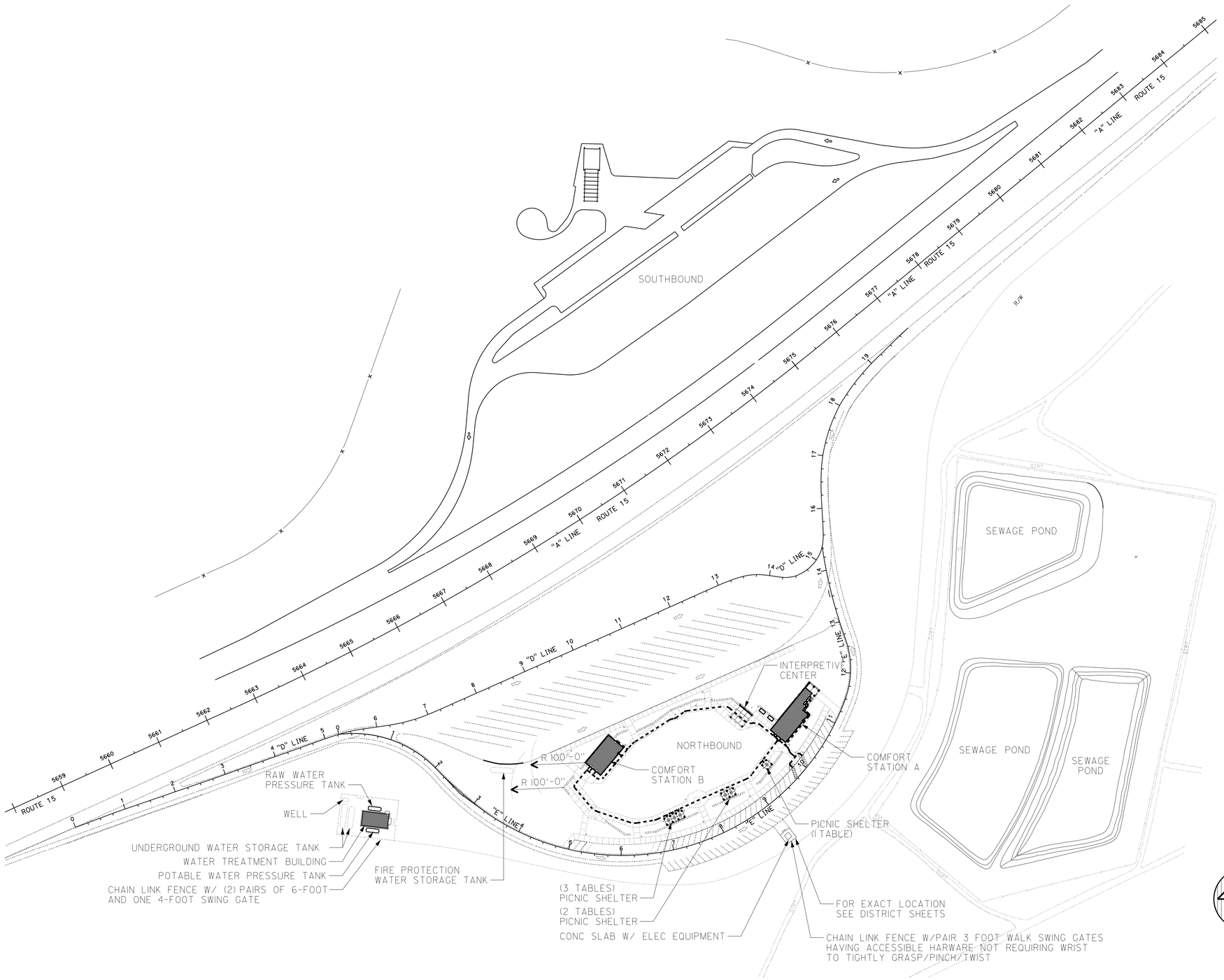

NOTE:

NO WORK ON SOUTHBOUND REST AREA

DESIGN SUPERVISOR R E Travis / Donald E. Oleary	DESIGNER	CHECKED BY:	SHEET LEGEND A-I ARCHITECTURAL ST-I STRUCTURAL M-I MECHANICAL EE-I ELECTRICAL P-I PLUMBING SS-I SANITARY	STATE OF CALIFORNIA DEPARTMENT OF TRANSPORTATION	DIVISION OF ENGINEERING SERVICES ARCHITECTURAL AND STRUCTURAL DESIGN	BRIDGE NO. 540004R/L POST MILE 107.3	C.V. KANE SAFETY ROADSIDE REST AREA REHABILITATION GENERAL PLAN — GENERAL PLAN	SHEET GP
DESIGN ARCHITECT	DRAWN BY	STRUCTURAL REVIEW						
a0-00-gp.dgn TAEMWW Imperial Rev. 7/10 18-SEP-2013 11:00			ORIGINAL SCALE IN INCHES FOR REDUCED PLANS 0 1 2 3		UNIT 3600 PROJECT NUMBER & PHASE 08000002291 EA 000000	DISREGARD PRINTS BEARING EARLIER REVISION DATES →	REVISION DATES (PRELIMINARY STAGE ONLY) - 07 XX-XX-XX	SHEET X OF X

18-SEP-2013 11:00

a0-00-gp.dgn

DIST.	COUNTY	ROUTE	POST MILES TOTAL PROJECT	SHEET NO.	TOTAL SHEETS
03, 08	Sac, SBd	5, 15	23.3, R107.3	75	330

LICENSED ARCHITECT — DATE

LICENSED ARCHITECT JANUSZ PIETRZAK No. C-23915 Exp. 1/31/2015 STATE OF CALIFORNIA

9-16-13
PLANS APPROVAL DATE

The State of California or its officers or agents shall not be responsible for the accuracy or completeness of electronic copies of this plan sheet.

ACCESSIBILITY DESIGN APPROVAL STAMP DOT / DES / OTA
PROJECT ID **0800000229**
Reviewed by:
Date: 10-25-11

CALIFORNIA STATE FIRE MARSHAL APPROVED
Approval of this plan does not authorize or approve any omission or deviation from applicable regulations. Final approval is subject to field inspection. One set of approved plans shall be available on the project site at all times.
Reviewed by: FRANCIS SOLICH
Approval date: 09-11-13

SHEET INDEX

ARCHITECTURE

GP GENERAL PLAN
A0-0.1 SHEET INDEX
A0-0.2 CODE ANALYSIS, ABBREVIATIONS, SYBMOLS NOTES

STRUCTURE DEMOLITION

A0-1.1 SITE PLAN
A0-1.2 COMFORT STATION FLOOR PLAN
A0-1.3 COMFORT STATION ROOF PLAN AND ELEVATIONS
A0-1.4 WATER TREATMENT BLDG FLOOR PLAN, ELEVATIONS, SECTIONS

SITE ACCESSIBILITY

A0-2.1 NORTHBOUND SITE PLAN

ACCESSIBILITY

A0-3.1 ACCESSIBILITY STANDARD DETAILS
A0-3.2 ACCESSIBILITY STANDARD DETAILS
A0-3.3 ACCESSIBILITY STANDARD DETAILS
A0-3.4 ACCESSIBILITY STANDARD DETAILS
A0-3.5 ACCESSIBILITY STANDARD DETAILS

STRUCTURE 1 - COMFORT STATION A

A1-1.1 FLOOR PLAN
A1-1.2 PARTIAL FLOOR PLAN
A1-1.3 PARTIAL FLOOR PLAN
A1-1.4 REFLECTED CEILING PLAN
A1-1.5 ROOF PLAN
A1-2.1 BUILDING SECTIONS
A1-2.2 BUILDING SECTIONS
A1-2.3 BUILDING SECTIONS
A1-2.4 BUILDING SECTIONS
A1-2.5 BUILDING SECTIONS
A1-3.1 BUILDING ELEVATIONS
A1-4.1 INTERIOR ELEVATIONS
A1-4.2 INTERIOR ELEVATIONS
A1-4.3 INTERIOR ELEVATIONS
A1-4.4 CABINET DETAILS

STRUCTURE 2 - COMFORT STATION B

A2-1.1 FLOOR PLAN
A2-1.2 REFLECTED CEILING PLAN
A2-1.3 ROOF PLAN
A2-2.1 BUILDING SECTIONS
A2-2.2 BUILDING SECTIONS
A2-2.3 BUILDING SECTIONS
A2-3.1 BUILDING ELEVATIONS
A2-4.1 INTERIOR ELEVATIONS
A2-4.2 INTERIOR ELEVATIONS

STRUCTURE 4 - WATER TREATMENT BUILDING

A4-1.1 FLOOR PLAN
A4-1.2 REFLECTED CEILING PLAN
A4-1.3 ROOF PLAN
A4-2.1 EXTERIOR ELEVATIONS
A4-2.2 INTERIOR ELEVATIONS
A4-3.1 BUILDING SECTION
A4-3.2 BUILDING SECTION

STRUCTURE 6 - PICNIC SHELTERS

A6-1.1 FLOOR PLANS
A6-1.2 ROOF PLANS
A6-1.3 REFLECTED CEILING PLAN
A6-2.1 SECTIONS AND ELEVATIONS
A6-3.1 SECTION

STRUCTURE 7 - INTERPRETIVE CENTER

A7-1.1 FLOOR PLAN AND REFLECTED CEILING PLAN
A7-1.2 LOWER ROOF PLAN REFLECTED CEILING PLAN
A7-1.3 UPPER ROOF PLAN AND REFLECTED CEILING PLAN
A7-2.1 BUILDING ELEVATIONS
A7-3.1 BUILDING SECTION

SCHEDULES

A8-1.1 ROOM FINISH SCHEDULE
A8-1.2 SURFACE COLOR SCHEDULE
A8-2.1 DOOR SCHEDULE
A8-3.1 WINDOWS
A8-3.2 LOUVERS

DETAILS

A9-1.1 BUILDING EXTERIOR
A9-1.2 BUILDING EXTERIOR
A9-1.3 EXTERIOR WALL DETAILS
A9-2.1 ROOF
A9-2.2 ROOF
A9-2.3 ROOF
A9-2.4 ROOF
A9-2.5 CORRUGATED METAL ROOFING
A9-2.6 ROOF DETAILS
A9-2.7 NOT USED
A9-2.8 DOWNSPOUT
A9-3.1 INTERIOR
A9-3.2 INTERIOR
A9-4.1 DOORS
A9-4.2 DOORS
A9-5.1 WINDOWS AND LOUVERS
A9-5.2 WINDOWS, LOUVERS AND GUARD POST
A9-5.3 WINDOWS AND LOUVERS

STRUCTURAL

ST-1 LEGEND
ST-2 CONCRETE STANDARD
ST-3 CONCRETE MASONRY UNIT STANDARD
ST-4 CONCRETE MASONRY UNIT STANDARD
ST-5 FOUNDATION DETAILS
ST-6 FOUNDATION DETAILS
ST-7 ROOF DECK DETAILS
ST-8 ROOF FRAMING DETAILS
ST-9 ROOF FRAMING DETAILS
ST-10 ROOF FRAMING DETAILS
ST-11 ROOF FRAMING SETAILS
ST-12 ROOF FRAMING DETAILS
ST-13 ROOF FRAMING DETAILS
ST-14 ROOF FRAMING DETAILS

STRUCTURE 1 - COMFORT STATION A

STI-0 DESIGN CRITERIA AND DETAIL NOTES
STI-1 FOUNDATION PLAN
STI-2 FOUNDATION PLAN
STI-3 ROOF FRAMING PLAN
STI-4 ROOF FRAMING PLAN
STI-5 PARTIAL CEILING FRAMING PLAN
STI-6 BUILDING SECTION
STI-7 BUILDING SECTION
STI-8 BUILDING SECTION
STI-9 BUILDING SECTION
STI-10 BUILDING SECTION
STI-11 CEILING
STI-12 ROOF FRAMING DETAILS
STI-13 ROOF FRAMING DETAILS
STI-14 ROOF FRAMING DETAILS

STRUCTURE 2 - COMFORT STATION B

ST2-0 DESIGN CRITERIA AND DETAIL NOTES
ST2-1 FOUNDATION PLAN
ST2-2 ROOF FRAMING PLAN
ST2-3 BUILDING SECTION
ST2-4 BUILDING SECTION

STRUCTURE 4 - WATER TREATMENT

ST4-0 DESIGN CRITERIA AND DETAIL NOTES
ST4-1 FOUNDATION PLAN
ST4-2 ROOF FRAMING PLAN
ST4-3 BUILDING SECTION

STRUCTURE 6 - PICNIC SHELTERS

ST6-0 DESIGN CRITERIA AND DETAIL NOTES
ST6-1 FOUNDATION PLAN
ST6-2 ROOF FRAMING PLAN
ST5-3 BUILDING SECTIONS

STRUCTURE 7 - INTERPRETIVE CENTER

ST7-0 DESIGN CRITERIA AND DETAIL NOTES
ST7-1 FOUNDATION PLAN AND ROOF FRAMING PLAN
ST7-2 ROOF FRAMING PLAN
ST7-3 SECTION
ST7-4 FOUNDATION DETAILS
ST7-5 ROOF FRAMING DETAILS
ST7-6 ROOF FRAMING DETAILS
-- LOG OF TEST BORINGS 1 OF 4
-- LOG OF TEST BORINGS 2 OF 4
-- LOG OF TEST BORINGS 3 OF 4
-- LOG OF TEST BORINGS 4 OF 4

MECHANICAL

M0-0 MECHANICAL LEGEND
M0-1 TITLE 24
M1-1 DOMESTIC WATER PLAN
M1-2 SANITARY SEWER
M1-3 DOMESTIC WATER-SCHEMATIC
M1-4 SANITARY SEWER-SCHEMATIC
M2-1 DOMESTIC WATER PLAN
M2-2 SANITARY SEWER PLAN
M2-3 DOMESTIC WATER-SCHEMATIC
M2-4 SANITARY SEWER-SCHEMATIC
M4-1 DOMESTIC WATER & SEWER PLAN
M4-2 DOMESTIC WATER & SEWER PLAN
M5-1 PLUMBING/ROUGH-IN DETAILS
M5-2 MECHANICAL DETAILS

ELECTRICAL

SITE

EE0-01.0LEGEND
EE0-01.1 OUTDOOR LIGHTING COMPLIANCE FORMS 1
EE0-01.2OUTDOOR LIGHTING COMPLIANCE FORMS 2
EE0-02 EXISTING SITE PLAN
EE0-03 NORTHBOUND MODIFIED POWER PLAN
EE0-04 NOT USED
EE0-05 NORTHBOUND MODIFIED COMMUNICATION PLAN
EE0-06 NOT USED
EE0-07 NORTHBOUND AREA LIGHTING PLAN
EE0-08 NOT USED
EE0-09 EXISTING SINGLE LINE DIAGRAM
EE0-10 MODIFIED SINGLE LINE DIAGRAM
EE0-11 SEVICE EQUIPMENT DETAILS

STRUCTURE 1 - COMFORT STATION A

EE1-0.1 INDOOR LIGHTING COMPLIANCE FORMS 1
EE1-0.2 INDOOR LIGHTING COMPLIANCE FORMS 2
EE1-0.3 INDOOR LIGHTING COMPLIANCE FORMS 3
EE1-1.1 PANEL LAYOUT
EE1-1.2 POWER PLAN
EE1-1.3 AUTOMATIC FLUSH SYSTEM
EE1-1.4 COMMUNICATION PLAN
EE1-2.1 LIGHTING PLAN
EE1-3.1 PANEL SCHEDULES
EE1-4.1 LOW VOLTAGE ELECTRICAL PLANS

STRUCTURE 2 - COMFORT STATION B

EE2-1.1 PANEL LAYOUT
EE2-1.2 POWER PLAN
EE2-1.3 AUTOMATIC FLUSH SYSTEM
EE2-2.1 LIGHTING PLAN
EE2-3.1 PANEL SCHEDULES
EE2-4.1 LOW VOLTAGE ELECTRICAL PLANS

STRUCTURE 4 - WATER TREATMENT

EE4-01 NORTHBOUND LOW VOLTAGE SITE PLAN
EE4-02 NOT USED
EE4-03 WATER TREATMENT SITE PLAN
EE4-1.1 PANEL LAYOUT
EE4-1.2 POWER PLAN
EE4-1.3 LOW VOLTAGE PLAN
EE4-2.1 LIGHTING PLAN
EE4-3.1 PANEL SCHEDULES
EE4-4.1 WELL PUMP CONTROL STATION
EE4-4.2 JUNCTION BOXES ELEVATION
EE4-4.3 RAW WATER BOOSTER PUMP CONTROL STATION
EE4-4.4 POTABLE WATER BOOSTER PUMP CONTROL STATION
EE4-4.5 SEWAGE PUMP CONTROL STATION DETAILS 1
EE4-4.6 SEWAGE PUMP CONTROL STATION DETAILS 2
EE4-4.7 SEWAGE PUMPS CONTROL STATION DETAIL 3
EE4-4.8 AERATOR PUMPS CONTROL STATION
EE4-4.9 ELECTRICAL DETAILS 1
EE4-5.1 WELL PUMP CONTROL STATION SCHEMATIC DIAGRAM
EE4-5.2 RWBP CONTROL STATION POWER SCHEMATIC DIAGRAM 1
EE4-5.3 RWBP CONTROL STATION CONTROL SCHEMATIC DIAGRAM 1
EE4-5.4 RWBP CONTROL STATION CONTROL SCHEMATIC DIAGRAM 2
EE4-5.5 PWBP CONTROL STATION POWER SCHEMATIC DIAGRAM 1
EE4-5.6 PWBP CONTROL STATION CONTROL SCHEMATIC DIAGRAM 1
EE4-5.7 PWBP CONTROL STATION CONTROL SCHEMATIC DIAGRAM 2
EE4-5.8 SEWAGE PUMP CONTROL STATION POWER SCHEMATIC DIAGRAM 1
EE4-5.9 SEWAGE PUMP CONTROL STATION CONTROL SCHEMATIC DIAGRAM 1
EE4-5.10SEWAGE PUMP CONTROL STATION CONTROL SCHEMATIC DIAGRAM 2
EE4-5.11 AERATOR PUMP CONTROL STATION SCHEMATIC DIAGRAM

ELECTRICAL CON'T.

EE4-6.1 PLC CONTROL CABINET 1
EE4-6.2 PLC CONTROL CABINET 2
EE4-6.3 PLC CONTROL CABINET 3
EE4-6.4 PLC DIGITAL INPUT MODULES 1
EE4-6.5 PLC DIGITAL INPUT MODULES 2
EE4-6.6 PLC ANALOG INPUT MODULES
EE4-6.7 NOT USED
EE4-6.8 PLC DIGITAL OUTPUT MODULES
EE4-6.9 PLC ANALOG OUTPUT MODULES
EE4-6.10PLC INTERCONNECTION DIAGRAM
EE4-6.11 PLC COMMUNICATION DIAGRAM
EE4-7.1 SCADA MAIN DISPLAY SCREEN 1
EE4-7.2 SCADA MAIN DISPLAY SCREEN 2
EE4-7.3 SYSTEM SELECTION SCREENSHOT
EE4-7.4 WATER SYSTEM SCREENSHOT
EE4-7.5 WELL PUMP AND RAW WATER STORAGE TANK SCREEN
EE4-7.6 RAW WATER PRESSURE TANK AND BOOSTER PUMP SCREEN
EE4-7.7 POTABLE WATER PRESSURE TANK AND BOOSTER PUMP SCREEN
EE4-7.8 HISTORICAL DATA SCREEN 1
EE4-7.9 HISTORICAL DATA SCREEN 2
EE4-7.10HISTORICAL DATA SCREEN 3
EE4-7.11 SEWAGE SYSTEM OVERVIEW SCREEN
EE4-7.12SEWAGE LIFT STATION AND FLOW METER SCREEN
EE4-7.13SEWAGE POND TRANSDUCER AND AERATOR SCREEN
EE4-7.14SCROLL/DROP DOWN MENU FORMAT

STRUCTURE 6 - PICNIC SHELTER

EE6-1.1 ELECTRICAL PLAN

STRUCTURE 7 - INTERPRETIVE CENTER

EE7-1.1 ELECTRICAL PLAN

ELECTRICAL DETAILS AND SCHEMATICS

EE8-1.1 SCHEMATICS AND DETAILS
EE8-1.2 ELECTRICAL DETAILS
EE8-1.3 INTERIOR LIGHTING SCHEMATIC DIAGRAM 1
EE8-1.4 INTERIOR LIGHTING SCHEMATIC DIAGRAM 2
EE8-1.5 EXTERIOR LIGHTING SCHEMATIC DIAGRAM
EE8-1.6 LIGHTING SCHEDULE
EE8-1.7 LIGHTING DETAILS

WATER/WASTEWATER

W-0 NOTES, LEGENDS & ABBREVIATIONS
W-1 EXISTING SITE PLAN
W-2 MODIFIED SITE PLAN
W-3 WATER TREATMENT BUILDING LAYOUT
W-4 WATER TREATMENT BUILDING INTERIOR LAYOUT
W-5 WATER TREATMENT PIPE SCHEMATICS
W-6 WATER WELL DETAILS
W-7 WATER STORAGE TANK DETAILS
W-8 PRESSURE TANK DETAILS
W-9 DISINFECTION SYSTEM DETAILS
W-10 FIRE PROTECTION WATER STORAGE TANK DETAILS
W-11 WATER PIPE DETAILS
W-12 DETAILS
W-13 JACKED PIPE DETAILS
W-14 JACKED PIPE PROFILE
W-15 LOW VOLTAGE ELECTRICAL LAYOUT

SANITARY SEWER

SS-0 NOTES, LEGENDS & ABBREVIATIONS
SS-1 EXISTING SITE PLAN
SS-2 MODIFIED SITE PLAN
SS-3 SEWAGE PONDS
SS-4 SECTIONS
SS-5 SEWAGE LIFT STATION
SS-6 DETAILS 1
SS-7 DETAILS 2
SS-8 DETAILS 3
SS-9 DETAILS 4
SS-10 SEWAGE LOW VOLTAGE ELECTRICAL LAYOUT
SS-11 SEWAGE JACKED PIPE PROFILE

	BY	CHECKED
DESIGN	JANUSZ PIETRZAK	Donald E. Alsey
DETAILS	C R ZERIO ROBERTINO QUIBIN	Donald E. Alsey
QUANTITIES	N/A	N/A

STATE OF CALIFORNIA DEPARTMENT OF TRANSPORTATION

DIVISION OF ENGINEERING SERVICES ARCHITECTURAL AND STRUCTURAL DESIGN

BRIDGE NO. 540004R/L
POST MILE 107.3

C.V. KANE SAFETY ROADSIDE REST AREA REHABILITATION

SHEET INDEX

SHEET **A0-0.1**

a0-01.dgn
TAEMWW Imperial Rev. 7/10 18-SEP-2013 11:01

ORIGINAL SCALE IN INCHES FOR REDUCED PLANS 0 1 2 3

UNIT 3600
PROJECT NUMBER & PHASE 08000002291
EA 000000

DISREGARD PRINTS BEARING EARLIER REVISION DATES → - -07

REVISION DATES (PRELIMINARY STAGE ONLY) SHEET X OF X

18-SEP-2013 11:01
a0-01.dgn

DIST.	COUNTY	ROUTE	POST MILES TOTAL PROJECT	SHEET NO.	TOTAL SHEETS
03, 08	Sac, SBd	5, 15	23.3, R107.3	76	330

LICENSED ARCHITECT — DATE

LICENSED ARCHITECT JANUSZ PIETRZAK No. C-23915 Exp. 1/31/2015 STATE OF CALIFORNIA

9-16-13
PLANS APPROVAL DATE

The State of California or its officers or agents shall not be responsible for the accuracy or completeness of electronic copies of this plan sheet.

BUILDING DATA AND CODE ANALYSIS

THIS PROJECT IS IN COMPLIANCE — DATA SHOWN IS SAME FOR EACH DIRECTION

	OCCUPANCY	CONSTRUCTION TYPE	OCCUPANCY SEPARATION	BUILDING HEIGHT	BUILDING AREA	CANOPY AREA	TOTAL AREA	ALLOWABLE AREA	AREA OR HEIGHT INCREACES	FIRE SPRINKLERED	FIRE ALARM	OTHER FIRE PROTECTION SYSTEMS IF ANY	SMOKE CONTROL SYSTEM	OCCUPANT LOAD
COMFORT STATION A	B	V-B	NOT REQ'D	14'-8"	3134.4 S.F.	451.4 S.F.	3585.8 S.F.	9000 S.F.	NO	NOT REQ'D	NOT REQ'D	NO	NOT REQ'D	6
COMFORT STATION B	B	V-B	NOT REQ'D	14'-8"	2468.9 S.F.	0	2468.9 S.F.	9000 S.F.	NO	NOT REQ'D	NOT REQ'D	NO	NOT REQ'D	0
WATER TREATMENT BUILDING	B	V-B	NOT REQ'D	16'-0"	1377.3 S.F.	0	1377.3 S.F.	9000 S.F.	NO	NOT REQ'D	NOT REQ'D	NO	NOT REQ'D	5
PICNIC SHELTER	B	V-B	NOT REQ'D	N/A	0	-196 S.F. -364 S.F. -532 S.F.	N/A	9000 S.F.	NO	NOT REQ'D	NOT REQ'D	NO	NOT REQ'D	0
INTERPRETIVE CENTER	B	V-B	NOT REQ'D	N/A	0	860.4 S.F.	860.4 S.F.	9000 S.F.	NO	NOT REQ'D	NOT REQ'D	NO	NOT REQ'D	0

FIRE FLOW CALCULATION PER NFPA-1142

$$\frac{\text{TOTAL VOLUME OF STRUCTURE}}{\text{OCCUPANCY HAZARD CLASSIFICATION NUMBER}} \times \text{CONSTRUCTION CLASSIFICATION NUMBER} \times 1.5 = \text{MINIMUM WATER SUPPLY}$$

$$\frac{3585.8 \text{ SF} \times 14.67}{7} \times 1.5 = 11{,}293 \text{ GALLONS}$$

12,000 GALLON TANK PROVIDED

SCOPE OF WORK

1. REMODEL EXISTING NORTHBOUND COMFORT STATION
2. CONSTRUCT NEW NORTHBOUND COMFORT STATION

DESIGN CRITERIA

THE BUILDING WORK FOR THIS PROJECT HAS BEEN DESIGN TO CONFORM TO THE 2010 EDITION OF TITLE 24, CALIFORNIA CODE OF REGULATIONS:
- PART 2 - CALIFORNIA BUILDING CODE,
- PART 3 - CALIFORNIA ELECTRICAL CODE,
- PART 4 - CALIFORNIA MECHANICAL CODE,
- PART 5 - CALIFORNIA PLUMBING CODE,
- PART 6 - CALIFORNIS ENERGY CODE,
- PART 9 - CALIFORNIA FIRE CODE.

AND THE 1991 ADA STANDARDS

GENERAL NOTES

1. THE CONTRACTOR SHALL FIELD VERIFY ALL CONTROLLING DIMENSIONS AND EXISISTNG FIELD CONDITIONS BEFORE PROCEEDING WITH WORK OR ORDERING OR FABRICATING ANY MATERIALS OR ASSEMBLIES.
2. THE CONTRACTOR SHALL NOTIFY THE ENGINEER IN WRITING OF ANY DISCREPANCIES BETWEEN THESE PLANS AND ACTUAL MEASUREMENTS OR FIELD CONDITIONS.

ACCESSIBILITY DESIGN APPROVAL STAMP DOT / DES / OTA
PROJECT ID 0800000229
Reviewed by:
Date: 10-25-11

CALIFORNIA STATE FIRE MARSHAL APPROVED
Approval of this plan does not authorize or approve any omission or deviation from applicable regulations. Final approval is subject to field inspection. One set of approved plans shall be available on the project site at all times.
Reviewed by: FRANCIS SOLICH
Approval date: 09-11-13

ARCHITECTURAL ABBREVIATIONS

AB	ANCHOR BOLT
AC	ASPHALT CONCRETE
ACT	ACOUSTICAL TILE
ADJ	ADJUSTABLE
ADDL	ADDITIONAL
ALT	ALTERNATE
ALUM	ALUMINUM
ARCH	ARCHITECTURAL
ASPH	ASPHALT
@	AT
BD	BOARD
BITUM	BITUMINOUS
BLDG	BUILDING
BLKG	BLOCKING
BM	BEAM
BOT	BOTTOM
BTWN	BETWEEN
BUR	BUILT-UP ROOFING
C	CHANNEL
CB	CATCH BASIN
CIP	CAST-IN-PLACE
CJ	CONTROL JOINT
CL	CENTERLINE
CLG	CEILING
CLR	CLEAR
CM	CUBIC METER
CMU	CONCRETE MASONRY UNIT
CO	CLEANOUT
COL	COLUMN
CONC	CONCRETE
CONT	CONTINIOUS
CT	CERAMIC TILE
CTR	COUNTER
CTSK	COUNTERSUNK
DBL	DOUBLE
DD	DOWNDRAIN
DF	DRINKING FOUNTAIN
DIA	DIAMETER
DIAG	DIAGONAL
DIM	DIMENSION
DISP	DISPENSER
DN	DOWN
DR	DOOR
DS	DOWNSPOUT
DTL	DETAIL
DWG	DRAWING
DWR	DRAWER
(E)	EXISTING
E	EAST
E/B	EAST BOUND
EA	EACH
EF	EXHAUST FAN
EHD	ELECTRIC HAND DRYER
EJ	EXPANSION JOINT
EL	ELEVATION HEIGHT
ELEC	ELECTRICAL
ELEV	ELEVATION VIEW
ELVR	ELEVATOR
EMER	EMERGENCY
EQ	EQUAL
EQUIP	EQUIPMENT
ESCL	ESCALATOR
EWC	ELECTRIC WATER COOLER
EXP	EXPANSION
EXT	EXTERIOR
FD	FLOOR DRAIN
FDN	FOUNDATION
FE	FIRE EXTINGUISHER
FEC	FE CABINET
FF	FINISH FLOOR
FHPWS	FLAT HEAD PHILLIPS WOOD SCREW
FHMS	FLATHEAD METAL SCREW
FHWS	FLATHEAD WOOD SCREW
FIN	FINISH
FLR	FLOOR
FLUOR	FLUORESCENT
FOC	FACE OF CONCRETE
FOM	FACE OF MASONRY
FOS	FACE OF STUD
FRP	FIBER REINFORCED PANEL
FS	FLOOR SINK
FTG	FOOTING
FWY	FREEWAY
GA	GAUGE
GALV	GALVANIZED
GB	GRAB BAR
GLM	GLUE LAMINATED MEMBER
GR	GRADE
GYP	GYPSUM
GSM	GALVANIZED SHEET MTL
HB	HOSE BIB
HC	HOLLOW CORE
HD	HAND DRYER
HDR	HEADER
HDWR	HARDWARE
HM	HOLLOW METAL
HORIZ	HORIZONTAL
HR	HOUR
HSB	HIGH STRENGTH BOLT
HT	HEIGHT
HVAC	HEATING VENTILATING AND AIR CONDITIONING
HWY	HIGHWAY
ID	IDENTIFICATION
INT	INTERIOR
INSUL	INSULATION
ISA	INTERNATIONAL SYMBOL OF ACCESSIBILITY
JAN	JANITOR
JST	JOIST
L	ANGLE
LAM	LAMINATE
LAV	LAVATORY
LBF	POUND FORCE
MAT	MATERIAL
MAX	MAXIMUM
MB	MACHINE BOLT
MECH	MECHANICAL
MTL	METAL
MF	METAL FRAMING
MFR	MANUFACTURER
MKBD	MARKER BOARD
MIN	MINIMUM
MISC	MISCELLANEOUS
MO	MASONRY OPENING
MR	MOISTURE RESISTANT
MT	METAL THRESHOLD
MTD	MOUNTED
MUL	MULLION
(N)	NEW
N	NORTH
NIC	NOT IN CONTRACT
No.	NUMBER
NR	NON RATED
NTS	NOT TO SCALE
OA	OVERALL
OH	OPPOSITE HAND
OC	ON CENTER
OD	OUTSIDE DIAMETER
OPNG	OPENING
PERF	PERFORATED
PL	PLATE
PLAM	PLASTIC LAMINATE
PLWD	PLYWOOD
PM	PRESSED METAL
PT	PRESSURE TREATED
PTDR	COMBINATION PAPER TOWEL DISPENSER AND RECEPTACLE
QT	QUARRY TILE
QTY	QUANTITY
R	RADIUS
RD	ROOF DRAIN
REF	REFERENCE
REINF	REINFORCED
REQD	REQUIRED
RFEC	RECESSED FIRE EXTINGUISHER CABINET
RHWS	ROUNDHEAD WOOD SCREW
RM	ROOM
R/W	RIGHT OF WAY
S	SOUTH
SC	SOLID CORE
SCHED	SCHEDULE
SHT	SHEET
SIM	SIMILAR
SND	SANITARY NAPKIN DISPOSAL
SMS	SHEET METAL SCREW
SPS	STRL PLYWD SHEATHING
SS	STAINLESS STEEL
STAG	STAGGERED
STD	STANDARD
STL	STEEL
STRL	STRUCTURAL
SUSP	SUSPENDED
SYM	SYMMETRICAL
T&B	TOP AND BOTTOM
T&G	TONGUE AND GROOVE
TEMP	TEMPORARY
TK	THICK
TIF	TRUCK INSPECTION FACILITY
TLT	TOILET
TS	TUBE STEEL
TSCD	TLT SEAT COVER DISPENSER
TTD	TOILET TISSUE DISPENSER
TYP	TYPICAL
UON	UNLESS NOTED OTHERWISE
UR	URINAL
VAR	VARIES
VCT	VINYL COMPOSITION TILE
VERT	VERTICAL
VTR	VENT THROUGH ROOF
W/B	WEST BOUND
W/O	WITHOUT
W/	WITH
WC	WATER CLOSET
WD	WOOD
WDW	WINDOW
WH	WATER HEATER

ARCHITECTURAL SYMBOLS

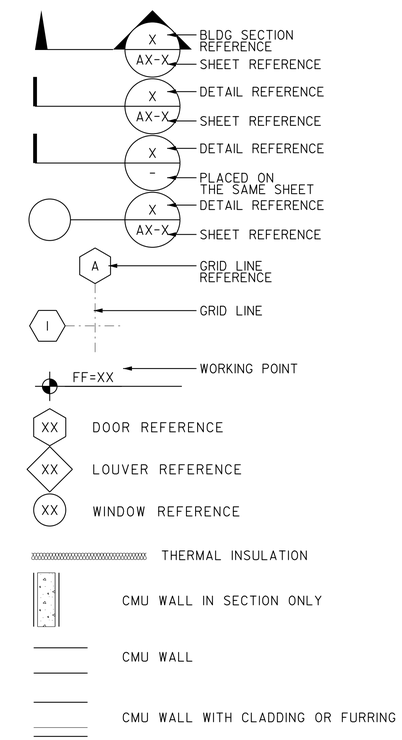

DESIGN	BY JANUSZ PIETRZAK	CHECKED Donald E. Alsey	
DETAILS	BY C R ZERIO ROBERTINO QUIBIN	CHECKED Donald E. Alsey	
QUANTITIES	BY N/A	CHECKED N/A	

STATE OF CALIFORNIA
DEPARTMENT OF TRANSPORTATION

DIVISION OF ENGINEERING SERVICES
ARCHITECTURAL AND STRUCTURAL DESIGN

BRIDGE NO. 540004R/L
POST MILE 107.3

C.V. KANE SAFETY ROADSIDE REST AREA REHABILITATION

CODE ANALYSIS, ABBREVIATIONS, SYMBOLS NOTES

SHEET **A0-0.2**

ORIGINAL SCALE IN INCHES FOR REDUCED PLANS 0 1 2 3

UNIT 3600
PROJECT NUMBER & PHASE 08000002291
EA 000000

DISREGARD PRINTS BEARING EARLIER REVISION DATES →
REVISION DATES (PRELIMINARY STAGE ONLY) - -07
SHEET X OF X

a0-02.dgn
TAEMWW Imperial Rev. 7/10 18-SEP-2013 11:01

18-SEP-2013 11:01
a0-02.dgn

DIST.	COUNTY	ROUTE	POST MILES TOTAL PROJECT	SHEET NO.	TOTAL SHEETS
03, 08	Sac, SBd	5, 15	23.3, R107.3	77	330

LICENSED ARCHITECT DATE

LICENSED ARCHITECT JANUSZ PIETRZAK No. C-23915 Exp. 1/31/2015 STATE OF CALIFORNIA

9-16-13
PLANS APPROVAL DATE

The State of California or its officers or agents shall not be responsible for the accuracy or completeness of electronic copies of this plan sheet.

ACCESSIBILITY DESIGN APPROVAL STAMP DOT / DES / OTA

PROJECT ID **0800000229**

Reviewed by:
Date: 10-25-11

CALIFORNIA STATE FIRE MARSHAL APPROVED

Approval of this plan does not authorize or approve any omission or deviation from applicable regulations. Final approval is subject to field inspection. One set of approved plans shall be available on the project site at all times.

Reviewed by: FRANCIS SOLICH
Approval date: 09-11-13

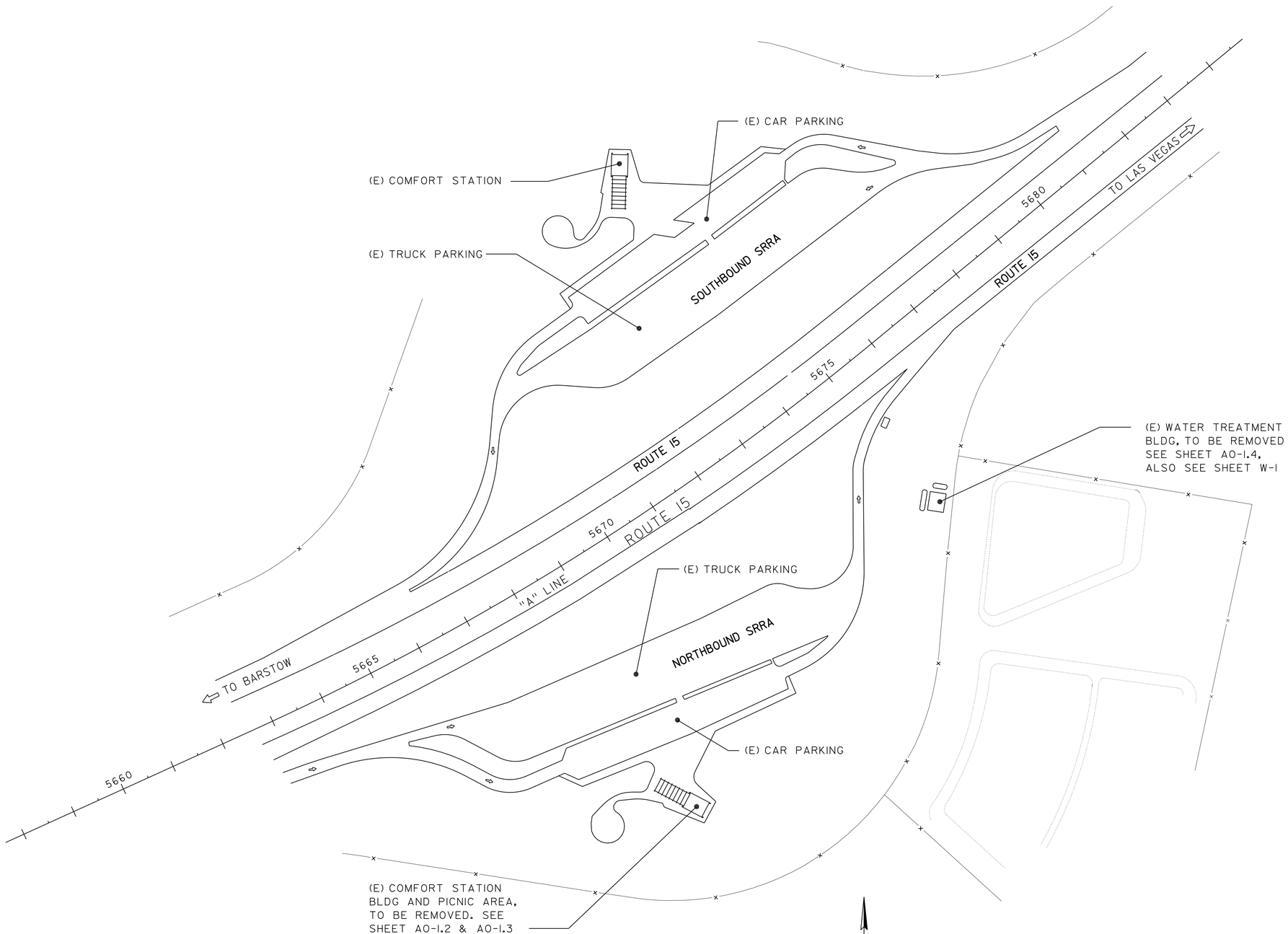

(E) SITE PLAN
SCALE 1" = 100'

DESIGN	BY JANUSZ PIETRZAK	CHECKED Donald E. Alsey	
DETAILS	BY C R ZERIO ROBERTINO QUIBIN	CHECKED Donald E. Alsey	
QUANTITIES	BY N/A	CHECKED N/A	

STATE OF CALIFORNIA
DEPARTMENT OF TRANSPORTATION

DIVISION OF ENGINEERING SERVICES
ARCHITECTURAL AND STRUCTURAL DESIGN

BRIDGE NO. 540004R/L
POST MILE 107.3
(E) STRUCTURE DEMOLITION

C.V. KANE SAFETY ROADSIDE REST AREA REHABILITATION

SITE PLAN

SHEET **A0-1.1**

a0-11.dgn
TAEMWW Imperial Rev. 7/10 18-SEP-2013 11:01

ORIGINAL SCALE IN INCHES FOR REDUCED PLANS 0 1 2 3

UNIT 3600
PROJECT NUMBER & PHASE 08000002291
EA 000000

DISREGARD PRINTS BEARING EARLIER REVISION DATES → - -07

REVISION DATES (PRELIMINARY STAGE ONLY) SHEET X OF X

18-SEP-2013 11:01
a0-11.dgn

DIST.	COUNTY	ROUTE	POST MILES TOTAL PROJECT	SHEET NO.	TOTAL SHEETS
03, 08	Sac, SBd	5, 15	23.3, R107.3	78	330

LICENSED ARCHITECT DATE

LICENSED ARCHITECT JANUSZ PIETRZAK No. C-23915 Exp. 1/31/2015 STATE OF CALIFORNIA

9-16-13
PLANS APPROVAL DATE

The State of California or its officers or agents shall not be responsible for the accuracy or completeness of electronic copies of this plan sheet.

ACCESSIBILITY DESIGN APPROVAL STAMP DOT / DES / OTA
PROJECT ID **08000000229**
Reviewed by:
Date: 10-25-11

CALIFORNIA STATE FIRE MARSHAL APPROVED
Approval of this plan does not authorize or approve any omission or deviation from applicable regulations. Final approval is subject to field inspection. One set of approved plans shall be available on the project site at all times.
Reviewed by: FRANCIS SOLICH
Approval date: 09-11-13

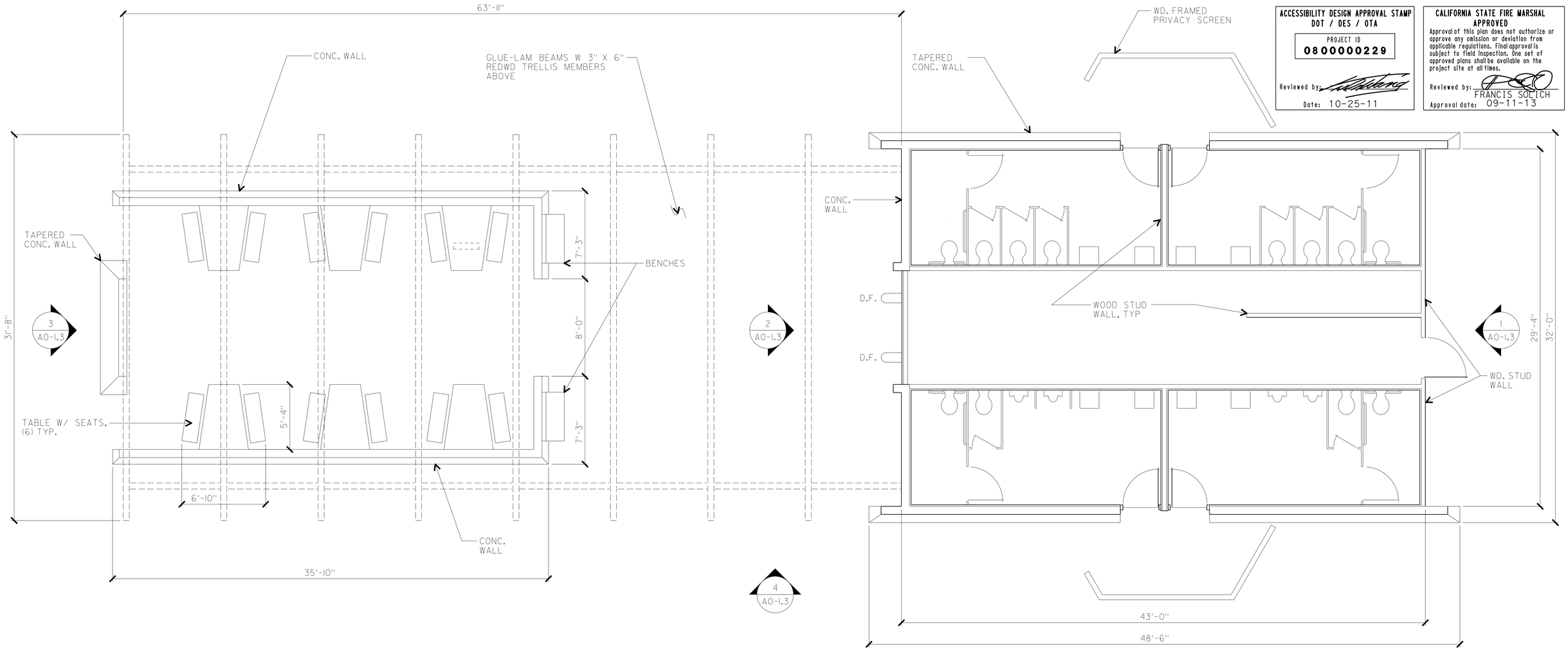

DEMOLITION FLOOR PLAN

1/4"=1'-0"

DESIGNED BY

DESIGN	BY JANUSZ PIETRZAK	CHECKED Donald E. Alsey	
DETAILS	BY C R ZERIO ROBERTINO QUIBIN	CHECKED Donald E. Alsey	
QUANTITIES	BY N/A	CHECKED N/A	

STATE OF CALIFORNIA DEPARTMENT OF TRANSPORTATION

DIVISION OF ENGINEERING SERVICES ARCHITECTURAL AND STRUCTURAL DESIGN

BRIDGE NO. 540004R/L
POST MILE 107.3

(E) STRUCTURE DEMOLITION

C.V. KANE SAFETY ROADSIDE REST AREA REHABILITATION

COMFORT STATION FLOOR PLAN

SHEET **A0-1.2**

a0-12.dgn
TAEMWW Imperial Rev. 7/10 18-SEP-2013 11:01

ORIGINAL SCALE IN INCHES FOR REDUCED PLANS 0 1 2 3

UNIT 3600
PROJECT NUMBER & PHASE 08000002291
EA 000000

DISREGARD PRINTS BEARING EARLIER REVISION DATES

REVISION DATES (PRELIMINARY STAGE ONLY) - 07

SHEET X OF X

18-SEP-2013 11:01
a0-12.dgn

DIST.	COUNTY	ROUTE	POST MILES TOTAL PROJECT	SHEET NO.	TOTAL SHEETS
03, 08	Sac, SBd	5, 15	23.3, R107.3	79	330

LICENSED ARCHITECT DATE

LICENSED ARCHITECT JANUSZ PIETRZAK No. C-23915 Exp. 1/31/2015 STATE OF CALIFORNIA

9-16-13
PLANS APPROVAL DATE

The State of California or its officers or agents shall not be responsible for the accuracy or completeness of electronic copies of this plan sheet.

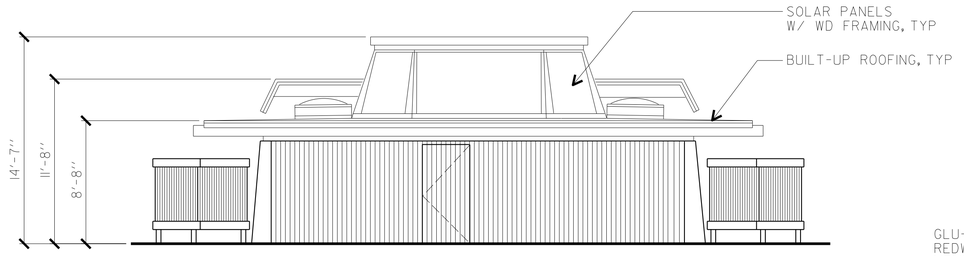

1

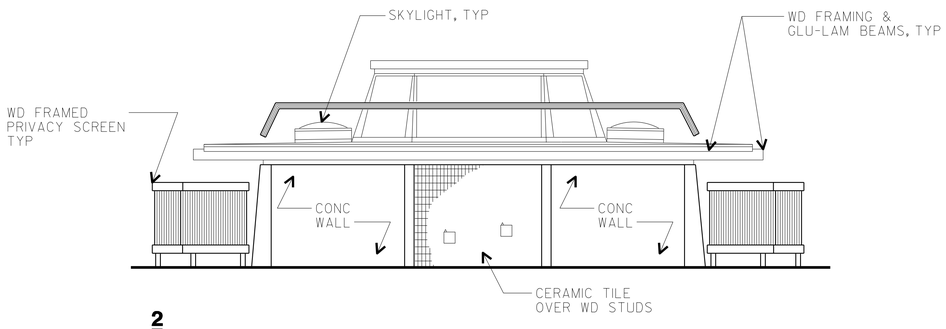

2

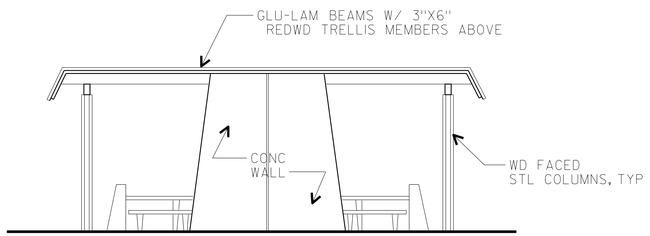

3

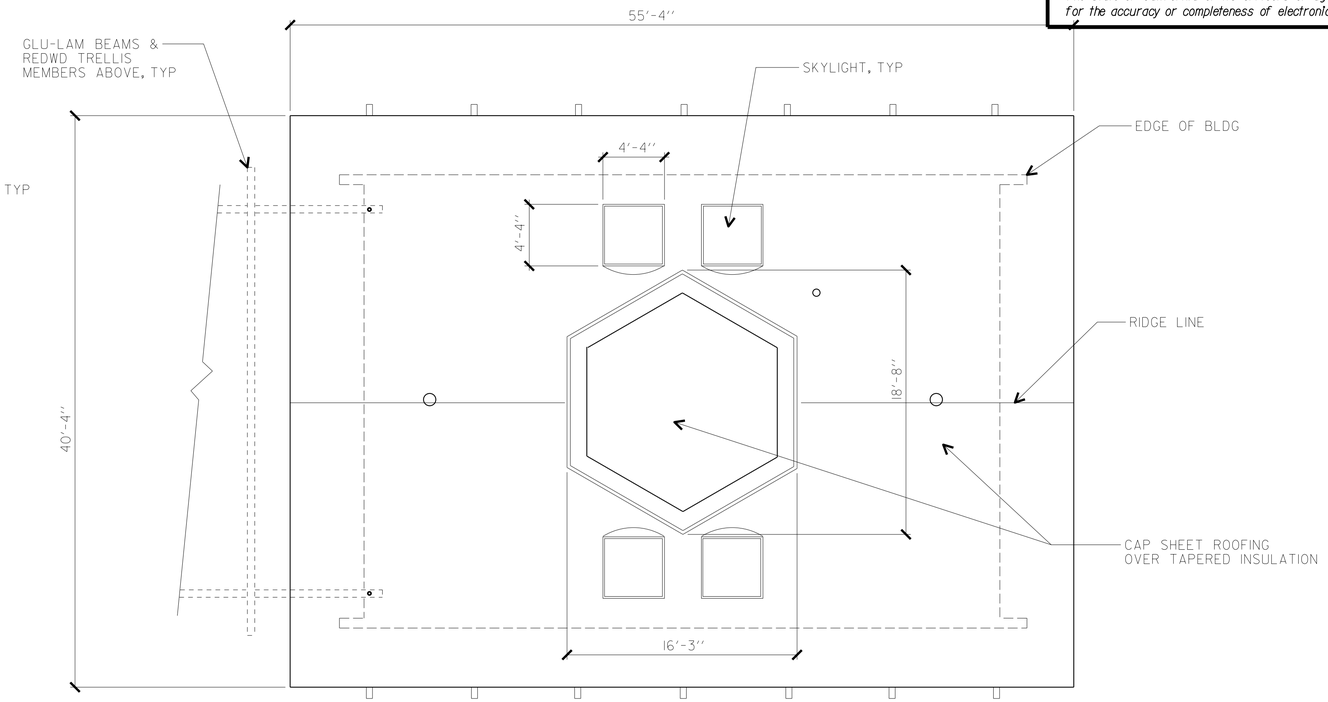

ROOF PLAN
1/4"=1'-0"

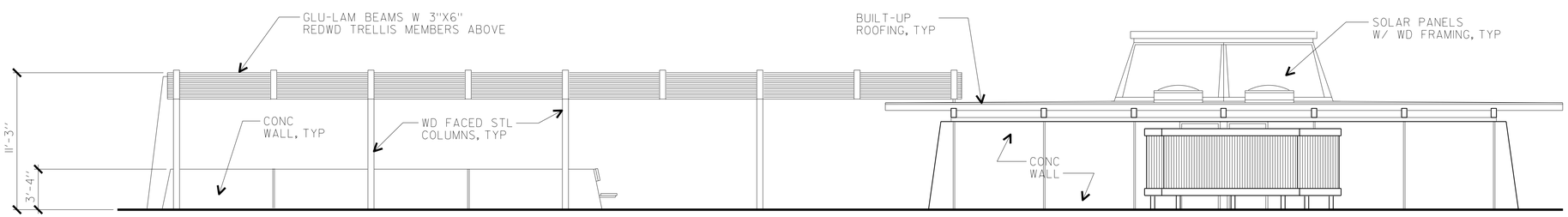

4

EXTERIOR ELEVATIONS
1/4"=1'-0"

ACCESSIBILITY DESIGN APPROVAL STAMP
DOT / DES / OTA
PROJECT ID
0800000229
Reviewed by:
Date: 10-25-11

CALIFORNIA STATE FIRE MARSHAL
APPROVED
Approval of this plan does not authorize or approve any omission or deviation from applicable regulations. Final approval is subject to field inspection. One set of approved plans shall be available on the project site at all times.
Reviewed by: FRANCIS SOLICH
Approval date: 09-11-13

DESIGNED BY

DESIGN	BY JANUSZ PIETRZAK	CHECKED Donald E. Alvarez	
DETAILS	BY C R ZERIO ROBERTINO QUIBIN	CHECKED Donald E. Alvarez	
QUANTITIES	BY N/A	CHECKED N/A	

STATE OF CALIFORNIA
DEPARTMENT OF TRANSPORTATION

DIVISION OF ENGINEERING SERVICES
ARCHITECTURAL AND STRUCTURAL DESIGN

BRIDGE NO. 540004R/L
POST MILE 107.3

(E) STRUCTURE DEMOLITION

C.V. KANE SAFETY ROADSIDE REST AREA REHABILITATION
COMFORT STATION ROOF PLAN AND ELEVATIONS

SHEET **A0-1.3**

a0-13.dgn
TAEMWW Imperial Rev. 7/10 18-SEP-2013 11:01

ORIGINAL SCALE IN INCHES FOR REDUCED PLANS 0 1 2 3

UNIT 3600
PROJECT NUMBER & PHASE 08000002291
EA 000000

DISREGARD PRINTS BEARING EARLIER REVISION DATES → - -07

REVISION DATES (PRELIMINARY STAGE ONLY) SHEET X OF X

18-SEP-2013 11:01
a0-13.dgn

DIST.	COUNTY	ROUTE	POST MILES TOTAL PROJECT	SHEET NO.	TOTAL SHEETS
03, 08	Sac, SBd	5, 15	23.3, R107.3	80	330

LICENSED ARCHITECT DATE

LICENSED ARCHITECT JANUSZ PIETRZAK No. C-23915 Exp. 1/31/2015 STATE OF CALIFORNIA

9-16-13
PLANS APPROVAL DATE

The State of California or its officers or agents shall not be responsible for the accuracy or completeness of electronic copies of this plan sheet.

ACCESSIBILITY DESIGN APPROVAL STAMP DOT / DES / OTA
PROJECT ID **0800000229**
Reviewed by:
Date: 10-25-11

CALIFORNIA STATE FIRE MARSHAL APPROVED
Approval of this plan does not authorize or approve any omission or deviation from applicable regulations. Final approval is subject to field inspection. One set of approved plans shall be available on the project site at all times.
Reviewed by: FRANCIS SOLICH
Approval date: 09-11-13

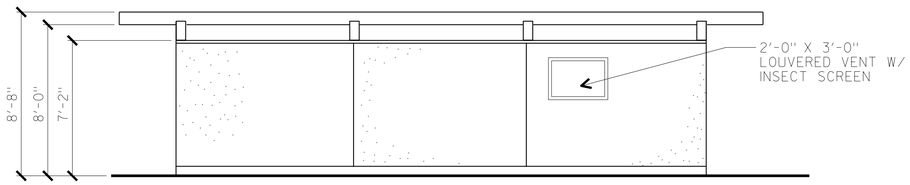

3

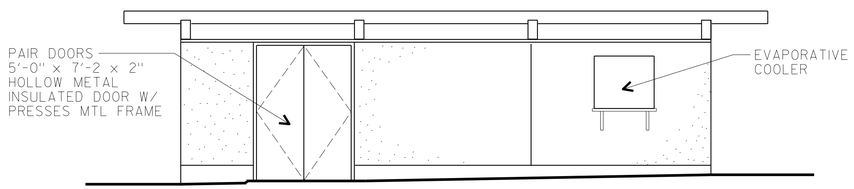

2

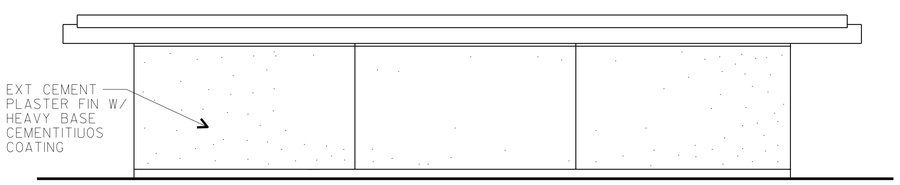

1

EXTERIOR ELEVATIONS
1/ 4"=1'-0"

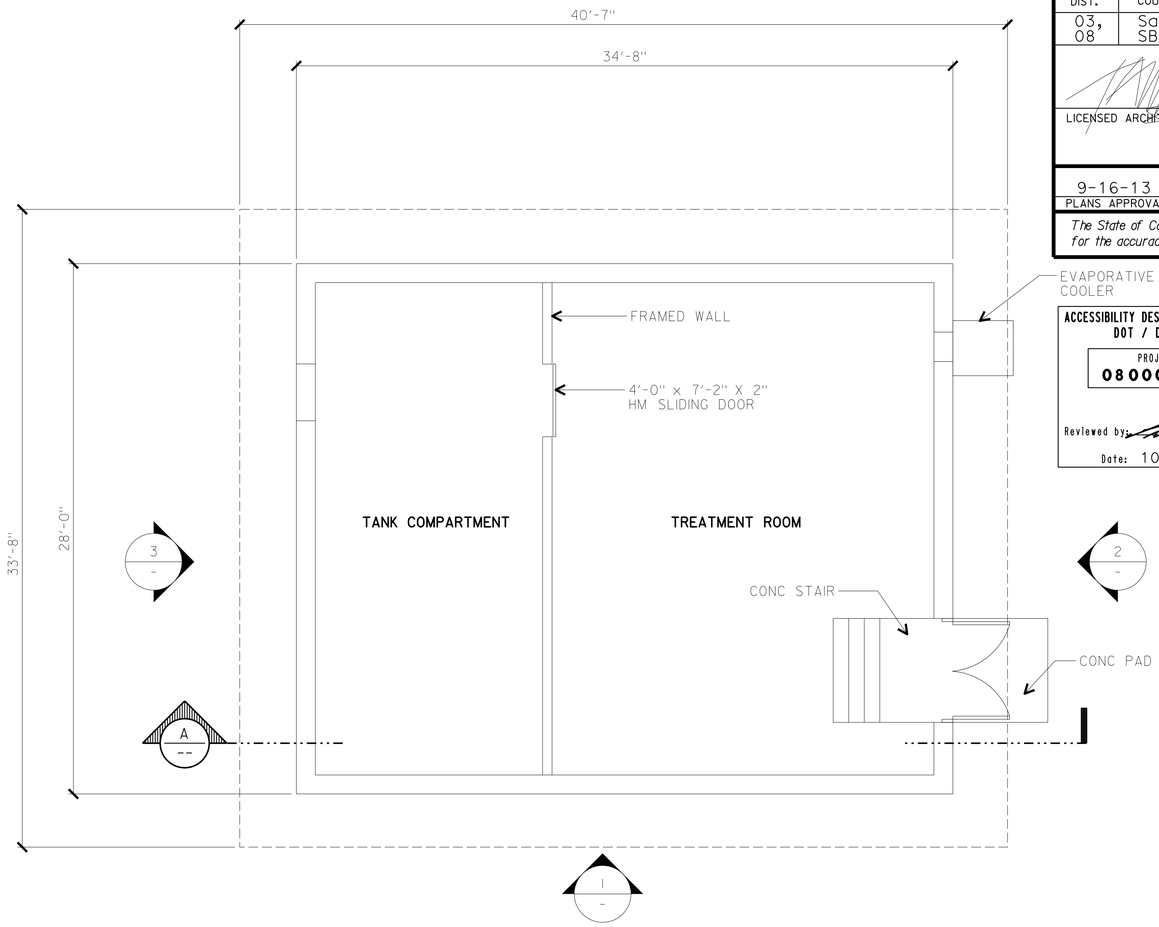

FLOOR PLAN
1/ 4"=1'-0"

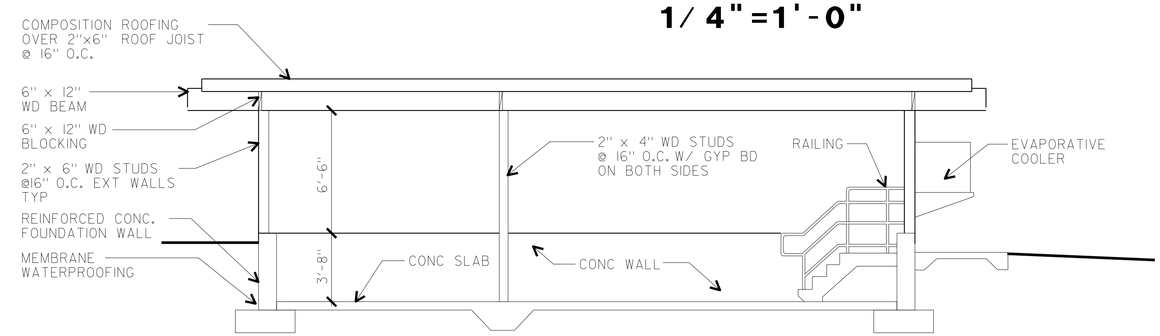

SECTION A
1/ 4"=1'-0"

DESIGNED BY

DESIGN	BY JANUSZ PIETRZAK	CHECKED Donald E. Alsey	
DETAILS	BY C R ZERIO ROBERTINO QUIBIN	CHECKED Donald E. Alsey	
QUANTITIES	BY N/A	CHECKED N/A	

STATE OF CALIFORNIA DEPARTMENT OF TRANSPORTATION

DIVISION OF ENGINEERING SERVICES ARCHITECTURAL AND STRUCTURAL DESIGN

BRIDGE NO. 540004R/L
POST MILE 107.3

(E) STRUCTURE DEMOLITION

C.V. KANE SAFETY ROADSIDE REST AREA REHABILITATION

WATER TREATMENT BLDG FLOOR PLAN, ELEVATIONS, SECTIONS

SHEET **A0-1.4**

a0-14.dgn
TAEMWW Imperial Rev. 7/10 18-SEP-2013 11:01

ORIGINAL SCALE IN INCHES FOR REDUCED PLANS 0 1 2 3

UNIT 3600
PROJECT NUMBER & PHASE 08000002291
EA 000000

DISREGARD PRINTS BEARING EARLIER REVISION DATES →

REVISION DATES (PRELIMINARY STAGE ONLY) - 07

SHEET X OF X

18-SEP-2013 11:01
a0-14.dgn

ACCESSIBILITY NOTES:

1. PEDESTRIAN PATH OF TRAVEL (POT) FROM SITE ENTRANCE ON PROPERTY LINE TO ALL BLDG. AND FACILITIES ARE NOT REQUIRED TO BE IN THE SCOPE OF WORK, AS ALL VISITORS AND EMPLOYEES ARRIVE BY VEHICLES ONLY.
2. POTS INDICATED AT SITE PLANS AND FLOOR PLANS SHALL BE THE MOST PRACTICAL DIRECT ROUTES BETWEEN ACCESSIBLE PARKING AND ALL EXTERIOR DOORS, PLUS SELECTED ACCESSIBLE ELEMENTS AS SHOWN ON THE PLANS. EXACT LOCATIONS OF POTS SHALL BE DETERMINED BY THE FIELD ENGINEER. THE CONTRACTOR SHALL VERIFY AND REMOVE ANY BARRIERS AT POT TO COMPLY WITH ALL THE ITEMS BELOW.
3. POTS' SURFACE SHALL BE FIRM, STABLE, SLIP-RESISTANT, W/O LOOSE GRAVEL, SAND, CHIPS, ETC. ANY PLANTER/GRATE/COVER IN OR ADJACENT TO POTS SHALL REQUIRE EDGE PROTECTION OF MIN. 6" HIGH CURB IF LEVEL CHANGE BETWEEN POT AND PLANTER/GRATE/COVER EXCEEDS 4".
4. IF ANY EXTERIOR POTS ARE LESS THAN 60" WIDE, THEN PASSING SPACE AT LEAST 60"X 60" SHALL BE LOCATED AT REASONABLE INTERVALS NOT TO EXCEED 200'.
5. EXTERIOR POTS SHALL BE MIN. 48" WIDE. ALL POTS SHALL HAVE MIN. 80" HEAD CLEARANCE, MAX. 5% SLOPE IN THE DIRECTION OF TRAVEL, MAX. 2% CROSS SLOPE, MAX. 1/2" LEVEL CHANGE W/MAX. 1:2 SLOPE. LEVEL CHANGE NOT EXCEEDING 1/4" MAY BE VERTICAL. ANY LEVEL CHANGE EXCEEDS 1/2" SHALL BE ACCOMMODATED BY CODE-COMPLIANT CURB RAMP. ANY SLOPE IN THE DIRECTION OF TRAVEL EXCEEDS 5% SHALL BE ACCOMMODATED BY CODE-COMPLIANT RAMP.
6. ALL DOORS SHALL HAVE CLEAR LEVEL AREAS ON BOTH SIDES OF DOORS W/MAX. 2% SLOPE IN ANY DIRECTION. CLEAR LEVEL AREA AT EXTERIOR DOOR FRONT APPROACH SHALL BE MIN. 60"X 60" IN THE DIRECTION OF DOORSWING (INCLUDING MIN. 24" PAST DOOR STRIKE EDGE), AND MIN. 48"X 36" OPPOSITE DOOR SWING (PLUS MIN. 12" PAST DOOR STRIKE EDGE IF DOOR HAS BOTH A LATCH AND A CLOSER). CLEAR LEVEL AREA AT INTERIOR DOOR FRONT APPROACH SHALL BE MIN. 60" DEEP X 54" WIDE IN THE DIRECTION OF DOOR SWING (INCLUDING MIN. 18" PAST DOOR STRIKE EDGE), AND MIN. 48" X 36" OPPOSITE DOOR SWING (PLUS MIN. 12" PAST DOOR STRIKE EDGE IF DOOR HAS BOTH A LATCH AND A CLOSER).
7. LEVEL CHANGE AT THE DOORWAY, INCLUDING THRESHOLD THICKNESS, SHALL BE MAX. 1/2" W/MAX. 1:2 SLOPE. LEVEL CHANGE NOT EXCEEDING 1/4" MAY BE VERTICAL.
8. AISLES FORMED BY EQUIPMENT/STORED MATERIALS/WALLS AT ANY ROOMS SHALL BE MIN. 36" WIDE IF SERVING ONE SIDE, AND MIN. 44" WIDE IF SERVING BOTH SIDES.
9. ELECTRICAL EQUIPMENT IS ACCESSED BY MAINTENANCE STAFF ARRIVED BY SERVICE VEHICLE PARKED AT ACCESS CONCRETE SLAB.
10. AISLES AROUND ELEC. EQUIP. SHALL BE MIN 36" WIDE.

KEY NOTES:

1. PUBLIC RESTROOMS
2. ACCESSIBLE PARKING
3. DRINKING FOUNTAINS
4. PUBLIC PAY TELEPHONES W/SIGN PER 7/A0-3.3
5. AUTO PARKING
6. TRUCK PARKING
7. NOT USED
8. POT TO ACCESSIBLE PICNIC TABLES
9. POT TO VENDING KIOSK
10. 12,000 GALLON FIRE FLOW WATER TANK UNDERGROUND SEE 1/W-3
11. NOT USED
12. 50" LONG PAINTED RED CURB CENTER ON HYDRANT"NO PARKING FIRE LANE" PAINTED ON CURB WITH WHITE LETTERS

LEGEND:

-------- ACCESSIBLE PATH OF TRAVEL

⇐ DIRECTIONAL SIGN, SEE 8/A0-3.2

TOTAL PARKING SPACES = 74
ACCESSIBLE PARKING SPACES = 4

ACCESSIBILITY DESIGN APPROVAL STAMP
DOT / DES / OTA
PROJECT ID **0800000229**
Reviewed by: [signature]
Date: 10-25-11

CALIFORNIA STATE FIRE MARSHAL APPROVED
Approval of this plan does not authorize or approve any omission or deviation from applicable regulations. Final approval is subject to field inspection. One set of approved plans shall be available on the project site at all times.
Reviewed by: [signature]
FRANCIS SOLICH
Approval date: 09-11-13

DIST.	COUNTY	ROUTE	POST MILES TOTAL PROJECT	SHEET NO.	TOTAL SHEETS
03, 08	Sac, SBd	5, 15	23.3, R107.3	81	330

LICENSED ARCHITECT [signature] DATE

LICENSED ARCHITECT JANUSZ PIETRZAK No. C-23915 Exp. 1/31/2015 STATE OF CALIFORNIA

9-16-13
PLANS APPROVAL DATE

The State of California or its officers or agents shall not be responsible for the accuracy or completeness of electronic copies of this plan sheet.

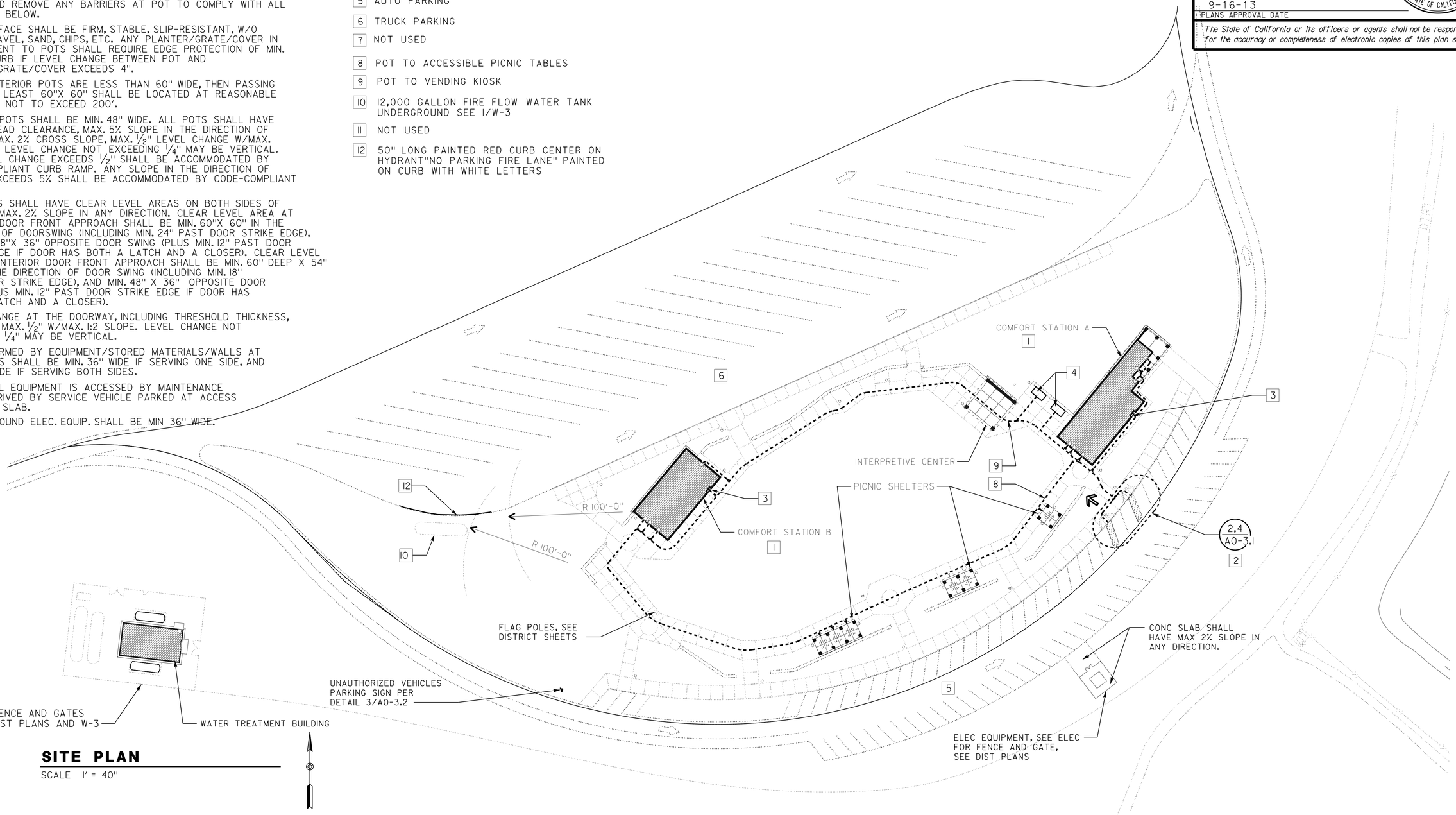

SITE PLAN

SCALE 1" = 40"

DESIGN	BY JANUSZ PIETRZAK	CHECKED Donald E. Alvarez	
DETAILS	BY C R ZERIO ROBERTINO QUIBIN	CHECKED Donald E. Alvarez	
QUANTITIES	BY N/A	CHECKED N/A	

STATE OF CALIFORNIA DEPARTMENT OF TRANSPORTATION

DIVISION OF ENGINEERING SERVICES ARCHITECTURAL AND STRUCTURAL DESIGN

BRIDGE NO. 540004R/L
POST MILE 107.3

C.V. KANE SAFETY ROADSIDE REST AREA REHABILITATION
ACCESSIBILITY — NORTHBOUND SITE PLAN

SHEET **A0-2.1**

a0-21.dgn
TAEMWW Imperial Rev. 7/10 18-SEP-2013 11:01

ORIGINAL SCALE IN INCHES FOR REDUCED PLANS 0 1 2 3

UNIT 3600
PROJECT NUMBER & PHASE 08000002291
EA 000000

DISREGARD PRINTS BEARING EARLIER REVISION DATES → - -07

REVISION DATES (PRELIMINARY STAGE ONLY) SHEET X OF X

18-SEP-2013 11:01
a0-21.dgn

DIST.	COUNTY	ROUTE	POST MILES TOTAL PROJECT	SHEET NO.	TOTAL SHEETS
03, 08	Sac, SBd	5, 15	23.3, R107.3	82	330

LICENSED ARCHITECT — DATE 08-15-13

LICENSED ARCHITECT Y.A. WANG No. C14891 Exp. 11-30-13 STATE OF CALIFORNIA

9-16-13
PLANS APPROVAL DATE

The State of California or its officers or agents shall not be responsible for the accuracy or completeness of electronic copies of this plan sheet.

ACCESSIBILITY DESIGN APPROVAL STAMP DOT / DES / OTA
PROJECT ID **0800000229**
Reviewed by:
Date: 10-25-11

CALIFORNIA STATE FIRE MARSHAL APPROVED
Approval of this plan does not authorize or approve any omission or deviation from applicable regulations. Final approval is subject to field inspection. One set of approved plans shall be available on the project site at all times.
Reviewed by: FRANCIS SOLICH
Approval date: 09-11-13

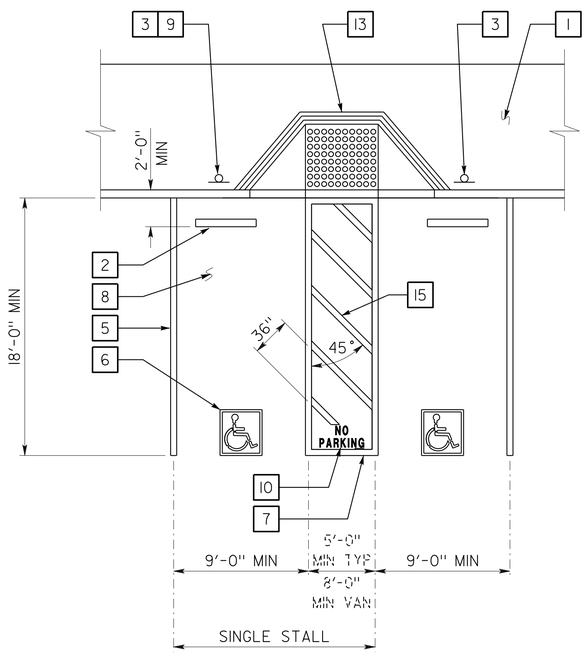

1 ACCESSIBLE PARKING STALL

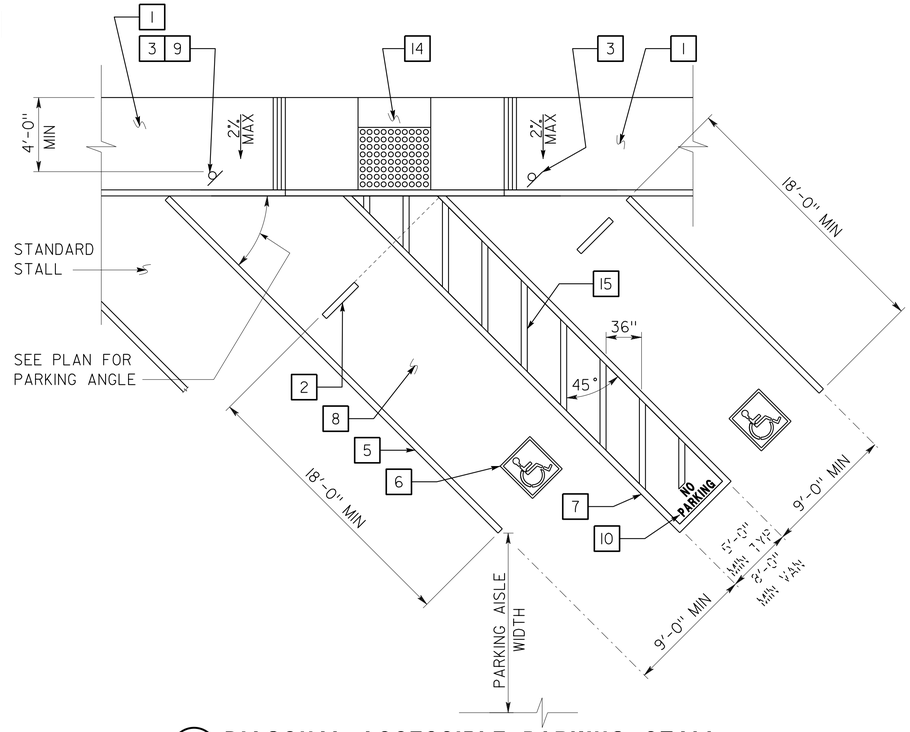

2 DIAGONAL ACCESSIBLE PARKING STALL

SEE PLAN FOR ANY VARIATION OF DIAGONAL PARKING

KEYED NOTE LEGEND FOR DETAILS 1 & 2

1. CONCRETE WALKWAY (WHERE OCCURS) SEE PLANS FOR WIDTH, LAYOUT (MAY VARY), FINISH, JOINTS AND ELEVATIONS.
2. PARKING BUMPER (AWAY FROM ACCESS AISLE). SEE SPECIFICATIONS.
3. ACCESSIBLE PARKING SPACE SIGNAGE SEE DETAIL 1 ON SHEET A0-3.2.
4. 1' WIDE GROOVED BORDER ON LEVEL SURFACE TYP AT RAMP PERIMETER. SEE DETAIL 3 ON THIS SHEET.
5. 4" WIDE WHITE PARKING STALL DESIGNATION STRIPE. SEE SITE PLAN(S) FOR ADDITIONAL STALL STRIPING. SEE SPECIFICATIONS FOR PAINTING.
6. ACCESSIBLE PARKING SURFACE IDENTIFICATION PAINTED ON PAVEMENT. SEE DETAIL 6 ON SHEET A0-3.2.
7. 4" WIDE BLUE BORDER DESIGNATION NON-PARKING ACCESS AISLE TO CURB RAMP
8. MAXIMUM SLOPE ON PARKING STALL PAVED AREA TO BE 2%.
9. VAN ACCESSIBLE SIGNAGE. SEE DETAIL 2 ON SHEET A0-3.2. ACCESS AISLE SHALL BE ON PASSENGER SIDE ONLY.
10. "NO PARKING" IN MIN 12" HIGH WHITE LETTERS TO BE PLACED WITHIN ACCESS AISLE TO CURB RAMP SEE DETAIL 7 ON SHEET A0-3.2.
11. LEVEL LANDING - 2% MAX SLOPE W/ 36" DEEP DETECTABLE WARNINGS SURFACE ADJOINING ACCESS AISLE OR VEHICULAR WAY. SEE DETAIL 6 ON THIS SHEET
12. DETECTABLE WARNING SURFACE TO EXTEND FULL WIDTH AND DEPTH OF CURB RAMP. SEE DETAIL 6 ON THIS SHEET.
13. CURB RAMP. SEE DETAIL 4 ON THIS SHEET. ALSO SEE PLANS FOR WIDTH AND LAYOUT (MAY VARY).
14. CURB RAMP. SEE DETAIL 5 ON THIS SHEET. ALSO SEE PLANS FOR WIDTH AND LAYOUT (MAY VARY).
15. 4" WIDE WHITE HATCHED LINES TO CONTRAST WITH ASPHALT SURFACE. USE BLUE HATCHED LINES FOR LIGHT-COLOR CONCRETE SURFACE.

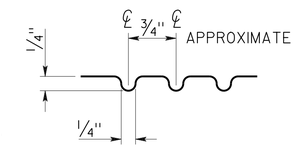

3 GROOVE DETAIL

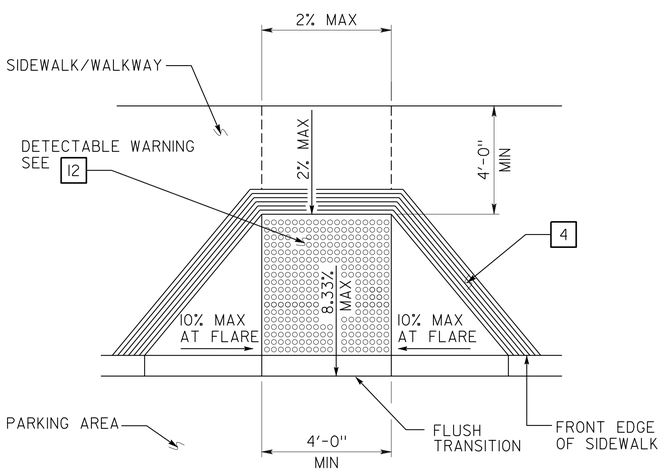

4 PERPENDICULAR CURB RAMP

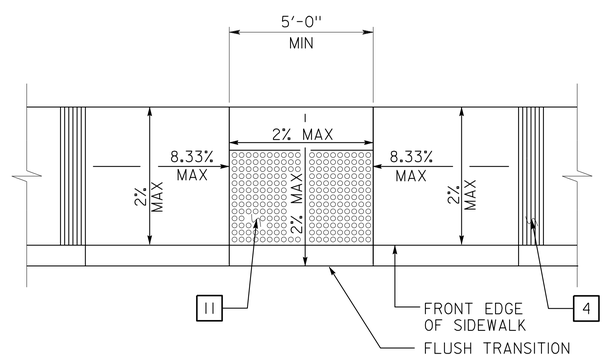

5 PARALLEL CURB RAMP

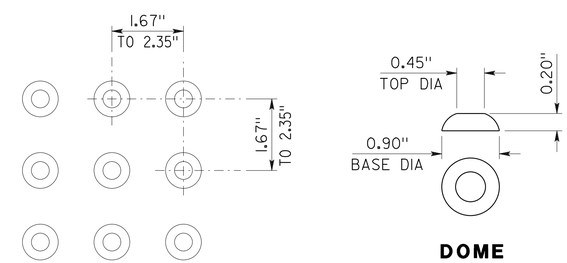

6 DETECTABLE WARNING SURFACE - TRUNCATED DOMES

DOME DIMENSIONS ARE NOMINAL, WHICH MAY BE WITHIN ±0.05" FOR DOME SPACING, AND ±0.02" FOR DOME SIZE.

DETAILS

NO SCALE UNLESS OTHERWISE NOTED

NOTE: SPECIFIC DETAILS OR NOTES ON OTHER SHEETS SHALL PREVAIL OVER STANDARD DETAILS AND NOTES ON THIS SHEET

STANDARD DRAWING

FILE NO. __-__-__	DESIGN	BY D. ALSEY	CHECKED Y.A. WANG	APPROVED R.E. Travis
DRAWING DATE 07-11	DETAILS	BY D. GOOD	CHECKED Y.A. WANG	DESIGN SUPERVISOR
	SUBMITTED BY Y.A. WANG			

STATE OF CALIFORNIA DEPARTMENT OF TRANSPORTATION

DIVISION OF ENGINEERING SERVICES ARCHITECTURAL AND STRUCTURAL DESIGN

BRIDGE NO. 540004R/L
POST MILE 107.3

C.V. KANE SAFETY ROADSIDE REST AREA REHABILITATION

ACCESSIBILITY — ACCESSIBILITY STANDARD DETAILS

SHEET A0-3.1

a0_31.dgn
TAEMWW Imperial Rev. 7/10 18-SEP-2013 11:01

ORIGINAL SCALE IN INCHES FOR REDUCED PLANS 0 1 2 3

UNIT 3600
PROJECT NUMBER & PHASE 08000002291
EA 000000

DISREGARD PRINTS BEARING EARLIER REVISION DATES → - -07

REVISION DATES (PRELIMINARY STAGE ONLY) SHEET OF

18-SEP-2013 11:01
a0_31.dgn

DIST.	COUNTY	ROUTE	POST MILES TOTAL PROJECT	SHEET NO.	TOTAL SHEETS
03, 08	Sac, SBd	5, 15	23.3, R107.3	83	330

LICENSED ARCHITECT — 08-15-13 DATE

LICENSED ARCHITECT Y.A. WANG No. C14891 Exp. 11-30-13 STATE OF CALIFORNIA

9-16-13
PLANS APPROVAL DATE

The State of California or its officers or agents shall not be responsible for the accuracy or completeness of electronic copies of this plan sheet.

ACCESSIBILITY DESIGN APPROVAL STAMP DOT / DES / OTA
PROJECT ID **0800000229**
Reviewed by: Date: 10-25-11

CALIFORNIA STATE FIRE MARSHAL APPROVED
Approval of this plan does not authorize or approve any omission or deviation from applicable regulations. Final approval is subject to field inspection. One set of approved plans shall be available on the project site at all times.
Reviewed by: FRANCIS SOLICH
Approval date: 09-11-13

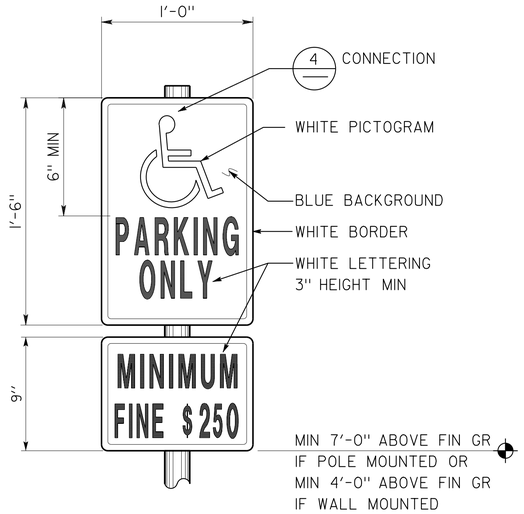

1 ACCESSIBLE PARKING SIGN
REFER TO SITE PLAN FOR LOCATIONS
COMBO SIGN MAY BE USED

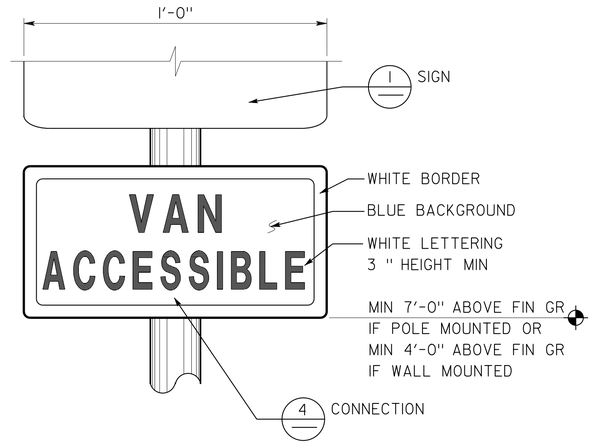

2 ACCESSIBLE VAN PARKING SIGN
REFER TO SITE PLAN FOR LOCATIONS
VAN ACCESSIBLE COMBO SIGN AND SEPARATE FINE PLAQUE MAY BE USED

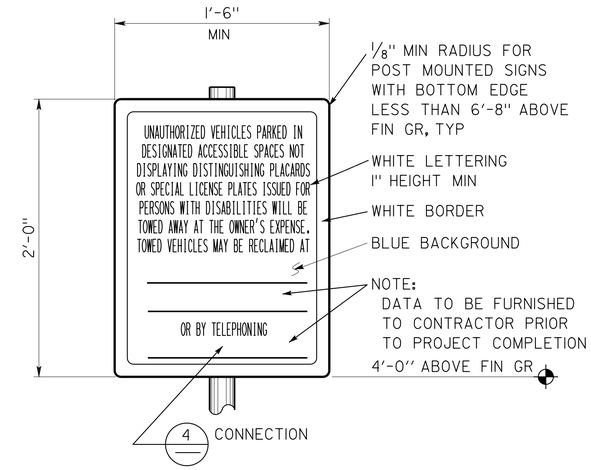

3 UNAUTHORIZED VEHICLES PARKING SIGN
REFER TO SITE PLAN FOR LOCATIONS
COLORS MAY VARY

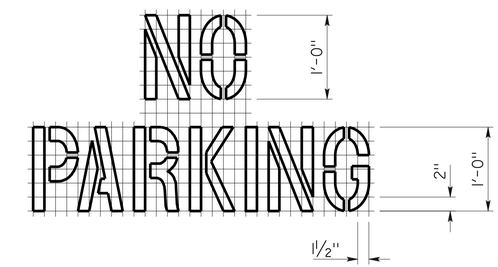

7 ACCESS AISLE PAVEMENT MARKING

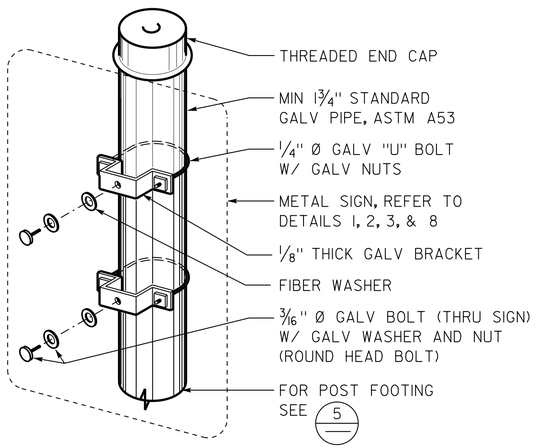

4 SIGN CONNECTION

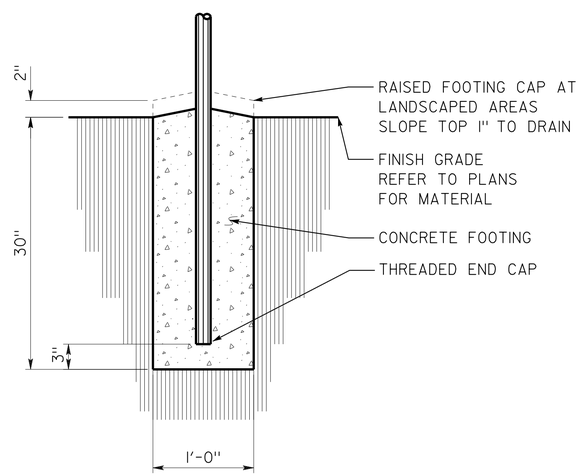

5 SIGN POST FOOTING

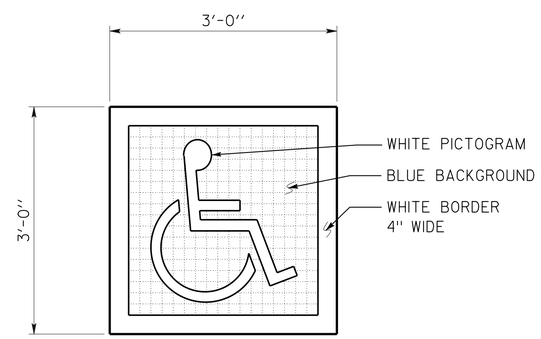

6 ACCESSIBLE PARKING SURFACE IDENTIFICATION
REFER TO DETAILS 1 AND 2 ON SHEET A0-3.1 FOR LOCATIONS

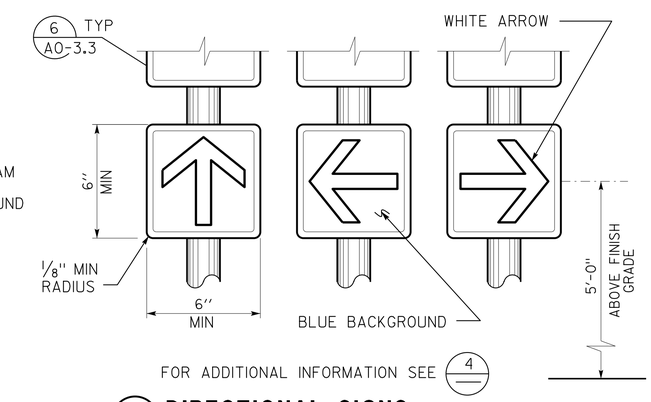

8 DIRECTIONAL SIGNS
REFER TO SITE PLAN FOR LOCATIONS
WALL OR DOOR MOUNTED SIGNS MAY BE USED
COMBO SIGN MAY BE USED
COLORS MAY VARY

DETAILS
NO SCALE UNLESS OTHERWISE NOTED

NOTE: SPECIFIC DETAILS OR NOTES ON OTHER SHEETS SHALL PREVAIL OVER STANDARD DETAILS AND NOTES ON THIS SHEET

STANDARD DRAWING
FILE NO. __-__-__ DESIGN BY D. ALSEY CHECKED Y.A. WANG APPROVED R.E. Travis
DRAWING DATE 07-11 DETAILS BY D. GOOD CHECKED Y.A. WANG DESIGN SUPERVISOR
SUBMITTED BY Y.A. WANG

STATE OF CALIFORNIA DEPARTMENT OF TRANSPORTATION

DIVISION OF ENGINEERING SERVICES ARCHITECTURAL AND STRUCTURAL DESIGN

BRIDGE NO. 540004R/L
POST MILE 107.3

C.V. KANE SAFETY ROADSIDE REST AREA REHABILITATION
ACCESSIBILITY — ACCESSIBILITY STANDARD DETAILS

SHEET A0-3.2

a0_32.dgn
TAEMWW Imperial Rev. 7/10 18-SEP-2013 11:01

ORIGINAL SCALE IN INCHES FOR REDUCED PLANS 0 1 2 3

UNIT 3600
PROJECT NUMBER & PHASE 08000002291
EA 000000

DISREGARD PRINTS BEARING EARLIER REVISION DATES
REVISION DATES (PRELIMINARY STAGE ONLY) - 07 SHEET OF

18-SEP-2013 11:01
a0_32.dgn

DIST.	COUNTY	ROUTE	POST MILES TOTAL PROJECT	SHEET NO.	TOTAL SHEETS
03, 08	Sac, SBd	5, 15	23.3, R107.3	84	330

LICENSED ARCHITECT — 08-15-13 DATE

LICENSED ARCHITECT Y.A. WANG No. C14891 Exp. 11-30-13 STATE OF CALIFORNIA

9-16-13
PLANS APPROVAL DATE

The State of California or its officers or agents shall not be responsible for the accuracy or completeness of electronic copies of this plan sheet.

ACCESSIBILITY DESIGN APPROVAL STAMP DOT / DES / OTA
PROJECT ID **0800000229**
Reviewed by: Date: 10-25-11

CALIFORNIA STATE FIRE MARSHAL APPROVED
Approval of this plan does not authorize or approve any omission or deviation from applicable regulations. Final approval is subject to field inspection. One set of approved plans shall be available on the project site at all times.
Reviewed by: FRANCIS SOLICH
Approval date: 09-11-13

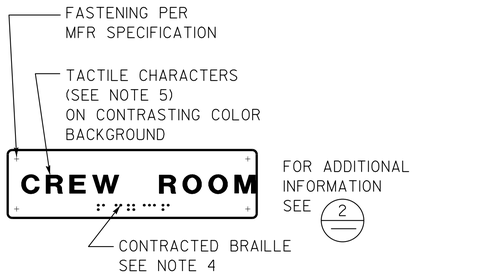

1 ROOM IDENTIFICATION SIGN

INSTALL PER DETAIL 5
TEXT VARIES
SEE PLANS, EXT ELEVATIONS, OR DOOR SCHEDULE FOR LOCATIONS AND TEXT
SEE DETAIL 7 FOR TEXT MOUNTING HEIGHT

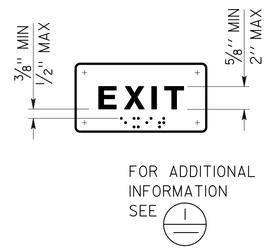

2 INTERIOR EXIT SIGN

INSTALL PER DETAIL 5
TEXT MAY VARY
SEE PLANS, OR DOOR SCHEDULE FOR LOCATIONS AND TEXT
SEE DETAIL 7 FOR TEXT MOUNTING HEIGHT

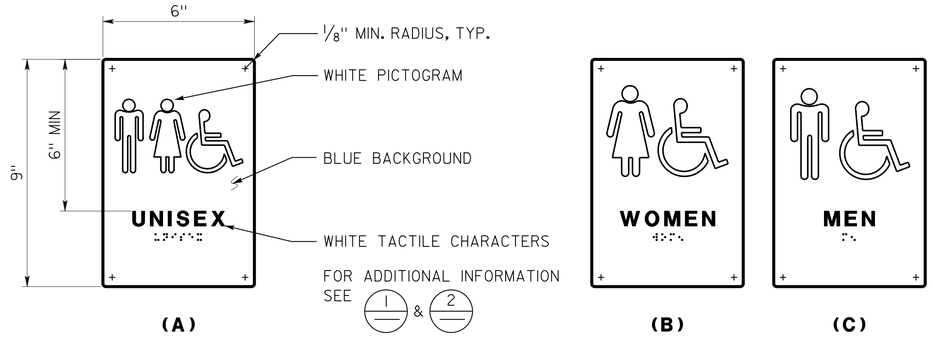

3 RESTROOM SIGNS

INSTALL PER DETAIL 5
SEE DETAIL 7 FOR TEXT MOUNTING HEIGHT

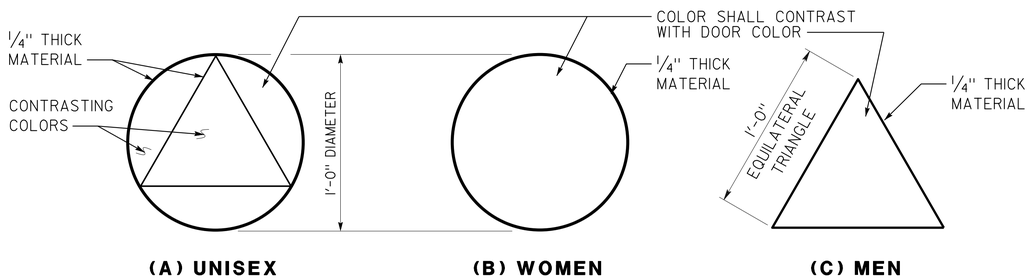

4 RESTROOM IDENTIFICATION SYMBOLS

INSTALL PER DETAIL 5
ANY PICTOGRAM AND TEXT ARE NOT REQUIRED

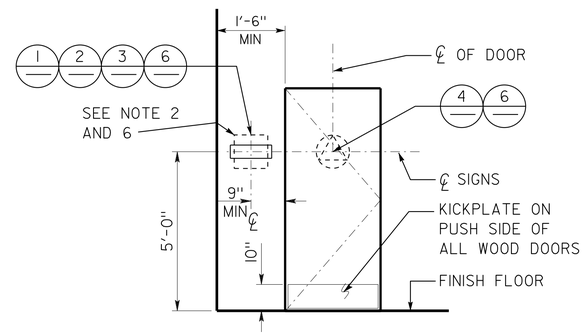

5 SIGN LOCATIONS

REFER TO SIGNAGE NOTES FOR ADDITIONAL INFORMATION

SIGNAGE NOTES:

1. LOCATE ROOM IDENTIFICATION SIGNS, EXIT SIGNS, AND RESTROOM SIGNS ON WALL ADJACENT TO DOOR ON LATCH SIDE. IF WALL SPACE IS NOT AVAILABLE ON LATCH SIDE, LOCATE ON NEAREST ADJACENT WALL. LOCATE SIGN TO THE RIGHT OF RIGHT HAND DOOR AT DOUBLE DOORS WITH TWO ACTIVE LEAFS.
2. REFER TO SPECIFICATIONS FOR SIGN MATERIAL AND OTHER COLOR SELECTION. EXCEPT DETAIL 6, SIGN COLORS MAY VARY FROM DETAILS.
3. SEE DOOR SCHEDULE FOR TEXT AND SIGN LOCATIONS, UON.
4. CONTRACTED BRAILLE: DOTS SHALL BE 1/10" OC IN EACH CELL WITH 2/10" SPACE BETWEEN CELLS MEASURED FROM THE SECOND COLUMN OF DOTS IN THE FIRST CELL TO THE FIRST COLUMN OF DOTS IN THE SECOND CELL. DOTS SHALL BE RAISED A MINIMUM OF 1/40" ABOVE THE BACKGROUND. DOTS SHALL BE DOMED OR ROUNDED.
5. TACTILE CHARACTERS SHALL BE UPPERCASE SANS SERIF RAISED 1/32" MIN WITH A WIDTH TO HEIGHT RATIO BETWEEN 3:5 AND 1:1 AND A STROKE WIDTH TO HEIGHT RATIO BETWEEN 1:5 AND 1:10.
6. PROVIDE 18"x18" MIN CLEAR FLOOR SPACE IN FRONT OF AND CENTERED ON THE SIGN.

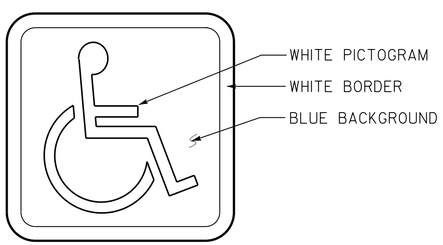

6 INTERNATIONAL SYMBOL OF ACCESSIBILITY SIGN

INSTALL PER DETAIL 5
SEE PLANS, ELEVATIONS, OR SCHEDULE FOR SIGN LOCATIONS.
DECAL MAY BE USED.

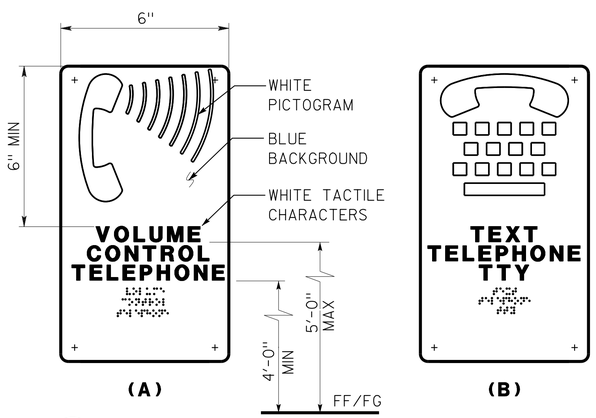

7 TELEPHONE SIGNS

TEXT MAY VARY
SEE PLANS OR EXT ELEVATIONS FOR SIGN LOCATIONS AND MOUNTING HEIGHTS

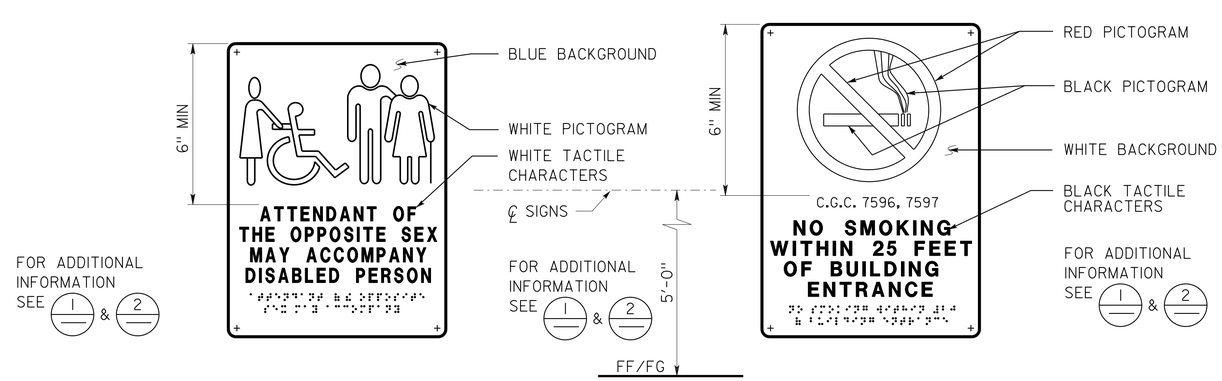

8 RESTROOM ACCOMPANY SIGN

SEE PLANS OR ELEVATIONS FOR LOCATIONS
SEE DETAIL 7 FOR TEXT MOUNTING HEIGHT

9 NO SMOKING SIGN

SEE PLANS OR EXTERIOR ELEVATIONS FOR LOCATIONS
SEE DETAIL 7 FOR TEXT MOUNTING HEIGHT

DETAILS

NO SCALE UNLESS OTHERWISE NOTED

NOTE: SPECIFIC DETAILS OR NOTES ON OTHER SHEETS SHALL PREVAIL OVER STANDARD DETAILS AND NOTES ON THIS SHEET

STANDARD DRAWING
FILE NO. __-__-__ | DESIGN BY D. ALSEY | CHECKED Y.A. WANG | APPROVED RE Travis
DRAWING DATE 07-11 | DETAILS BY D. GOOD | CHECKED Y.A. WANG | DESIGN SUPERVISOR
SUBMITTED BY Y.A. WANG

STATE OF CALIFORNIA DEPARTMENT OF TRANSPORTATION

DIVISION OF ENGINEERING SERVICES ARCHITECTURAL AND STRUCTURAL DESIGN

BRIDGE NO. 540004R/L
POST MILE 107.3

C.V. KANE SAFETY ROADSIDE REST AREA REHABILITATION
ACCESSIBILITY — ACCESSIBILITY STANDARD DETAILS

SHEET A0-3.3

a0_33.dgn
TAEMWW Imperial Rev. 7/10 18-SEP-2013 11:01

ORIGINAL SCALE IN INCHES FOR REDUCED PLANS 0 1 2 3

UNIT 3600
PROJECT NUMBER & PHASE 08000002291
EA 000000

DISREGARD PRINTS BEARING EARLIER REVISION DATES → - -07
REVISION DATES (PRELIMINARY STAGE ONLY) | SHEET | OF

18-SEP-2013 11:01
a0_33.dgn

DIST.	COUNTY	ROUTE	POST MILES TOTAL PROJECT	SHEET NO.	TOTAL SHEETS
03, 08	Sac, SBd	5, 15	23.3, R107.3	85	330

LICENSED ARCHITECT — 08-15-13 DATE

LICENSED ARCHITECT Y.A. WANG No. C14891 Exp. 11-30-13 STATE OF CALIFORNIA

9-16-13
PLANS APPROVAL DATE

The State of California or its officers or agents shall not be responsible for the accuracy or completeness of electronic copies of this plan sheet.

ACCESSIBILITY DESIGN APPROVAL STAMP DOT / DES / OTA
PROJECT ID **0800000229**
Reviewed by:
Date: 10-25-11

CALIFORNIA STATE FIRE MARSHAL APPROVED
Approval of this plan does not authorize or approve any omission or deviation from applicable regulations. Final approval is subject to field inspection. One set of approved plans shall be available on the project site at all times.
Reviewed by: FRANCIS SOLICH
Approval date: 09-11-13

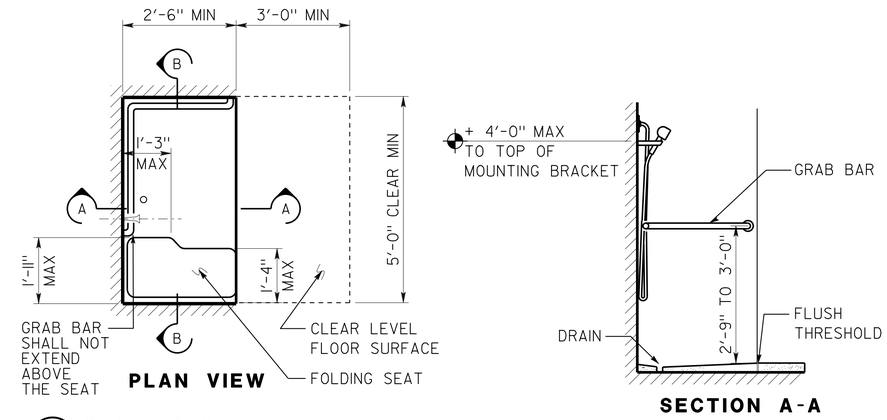

1 SHOWER STALL
OMIT AT SRRA SITES

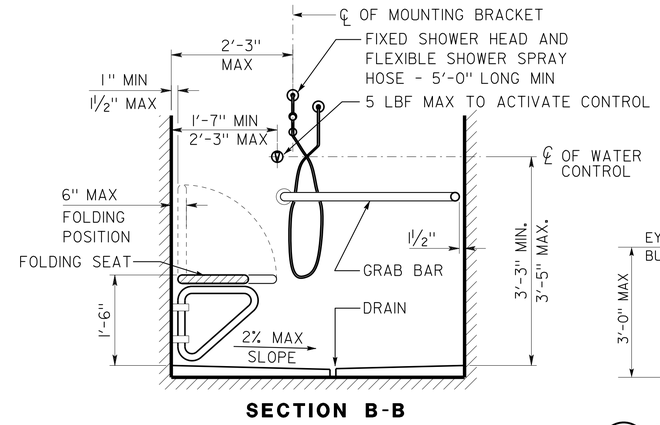

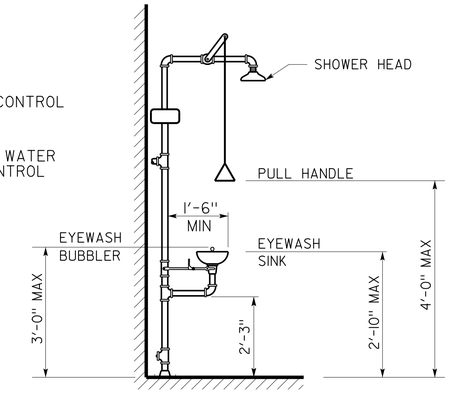

2 EMERGENCY EYEWASH/ SHOWER
NO SCALE

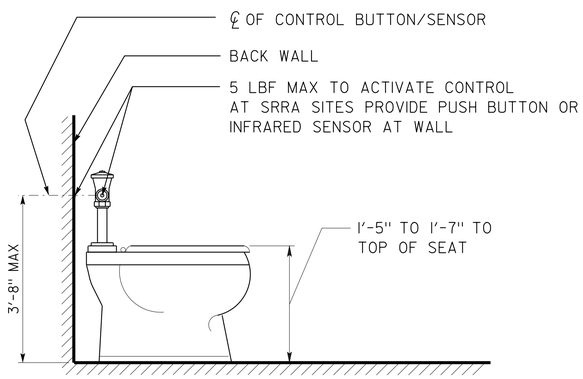

3 WATER CLOSET
SEE SPEC FOR FIXTURE TYPE

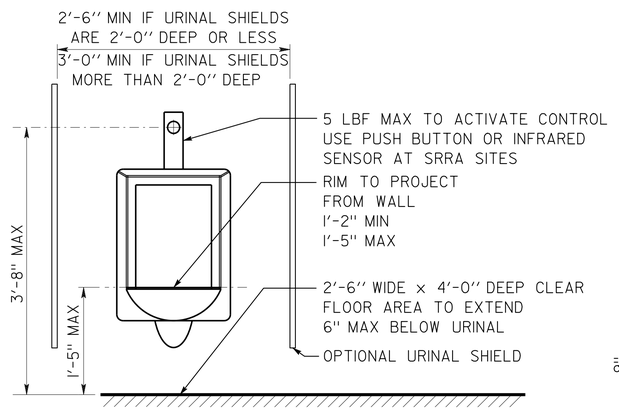

4 URINAL

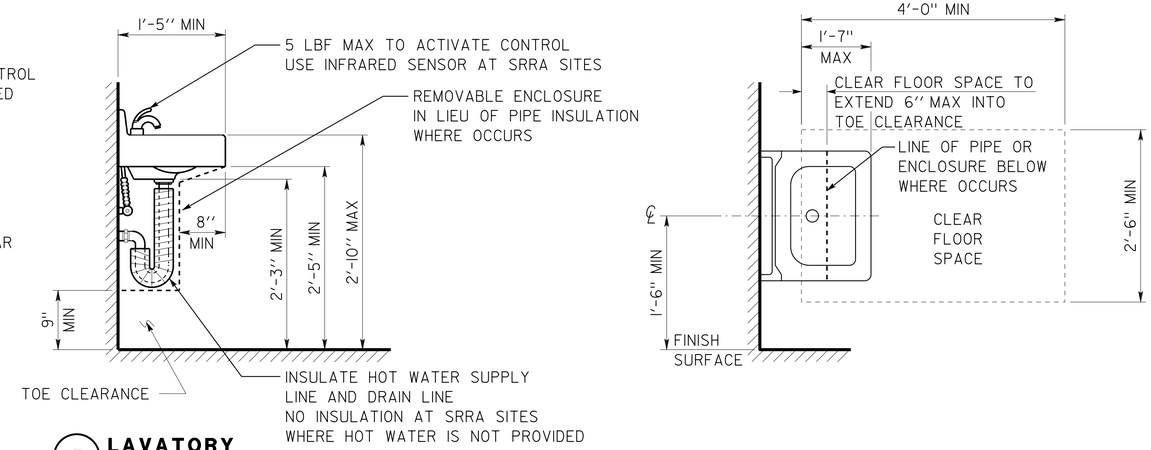

5 LAVATORY

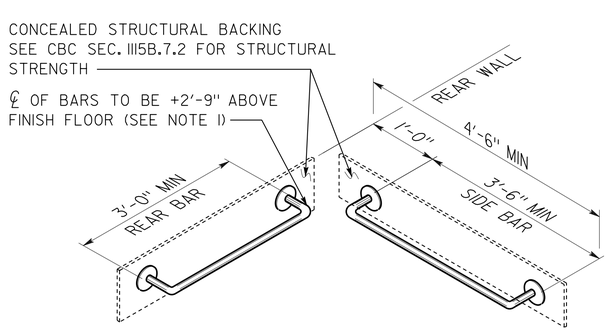

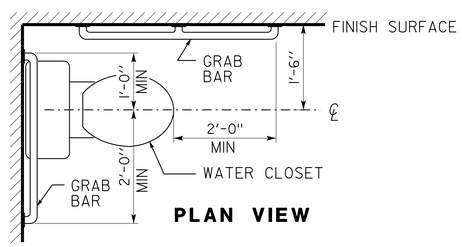

GRAB BAR NOTE:
1. IF TANK TYPE TOILET IS USED, TOP OF REAR BAR MAY BE SET TO 3'-0" MAX ABOVE FINISH FLOOR. SIDE BAR TO REMAIN AS SHOWN.
2. GRAB BARS TO BE 1¼" TO 1½" DIAMETER WITH CLEAR SPACE OF 1½" TO SMOOTH WALL SURFACE.

6 GRAB BARS/ WATER CLOSET

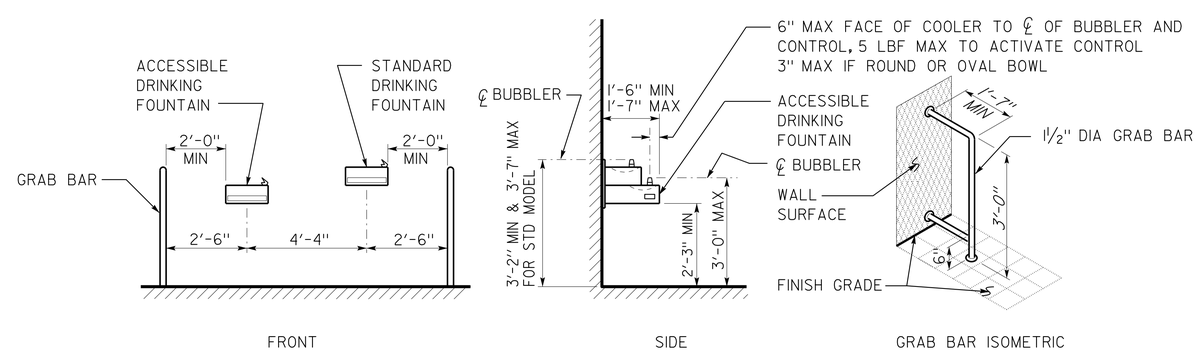

7 ELECTRIC WATER COOLER
IN LIEU OF GRAB BARS, OTHER TYPES OF WING WALLS MAY BE USED
DIMENSIONS AT FRONT ELEVATION MAY VARY - SEE PLAN

DETAILS
NO SCALE UNLESS OTHERWISE NOTED

NOTE: SPECIFIC DETAILS OR NOTES ON OTHER SHEETS SHALL PREVAIL OVER STANDARD DETAILS AND NOTES ON THIS SHEET

STANDARD DRAWING
FILE NO. __-__-__ | DESIGN BY D. ALSEY | CHECKED Y.A. WANG | APPROVED R E Travis DESIGN SUPERVISOR
DRAWING DATE 07-11 | DETAILS BY D. GOOD | CHECKED Y.A. WANG
SUBMITTED BY Y.A. WANG

STATE OF CALIFORNIA DEPARTMENT OF TRANSPORTATION
DIVISION OF ENGINEERING SERVICES ARCHITECTURAL AND STRUCTURAL DESIGN

BRIDGE NO. 540004R/L
POST MILE 107.3

C.V. KANE SAFETY ROADSIDE REST AREA REHABILITATION
ACCESSIBILITY — ACCESSIBILITY STANDARD DETAILS

SHEET A0-3.4

a0_34.dgn
TAEMWW Imperial Rev. 7/10 18-SEP-2013 11:01
ORIGINAL SCALE IN INCHES FOR REDUCED PLANS 0 1 2 3
UNIT 3600
PROJECT NUMBER & PHASE 08000002291
EA 000000
DISREGARD PRINTS BEARING EARLIER REVISION DATES
REVISION DATES (PRELIMINARY STAGE ONLY) - 07
SHEET OF
18-SEP-2013 11:01
a0_34.dgn

DIST.	COUNTY	ROUTE	POST MILES TOTAL PROJECT	SHEET NO.	TOTAL SHEETS
03, 08	Sac, SBd	5, 15	23.3, R107.3	86	330

LICENSED ARCHITECT — 08-15-13 DATE

LICENSED ARCHITECT Y.A. WANG No. C14891 Exp. 11-30-13 STATE OF CALIFORNIA

9-16-13
PLANS APPROVAL DATE

The State of California or its officers or agents shall not be responsible for the accuracy or completeness of electronic copies of this plan sheet.

ACCESSIBILITY DESIGN APPROVAL STAMP DOT / DES / OTA
PROJECT ID **0800000229**
Reviewed by: Date: 10-25-11

CALIFORNIA STATE FIRE MARSHAL APPROVED
Approval of this plan does not authorize or approve any omission or deviation from applicable regulations. Final approval is subject to field inspection. One set of approved plans shall be available on the project site at all times.
Reviewed by: FRANCIS SOLICH
Approval date: 09-11-13

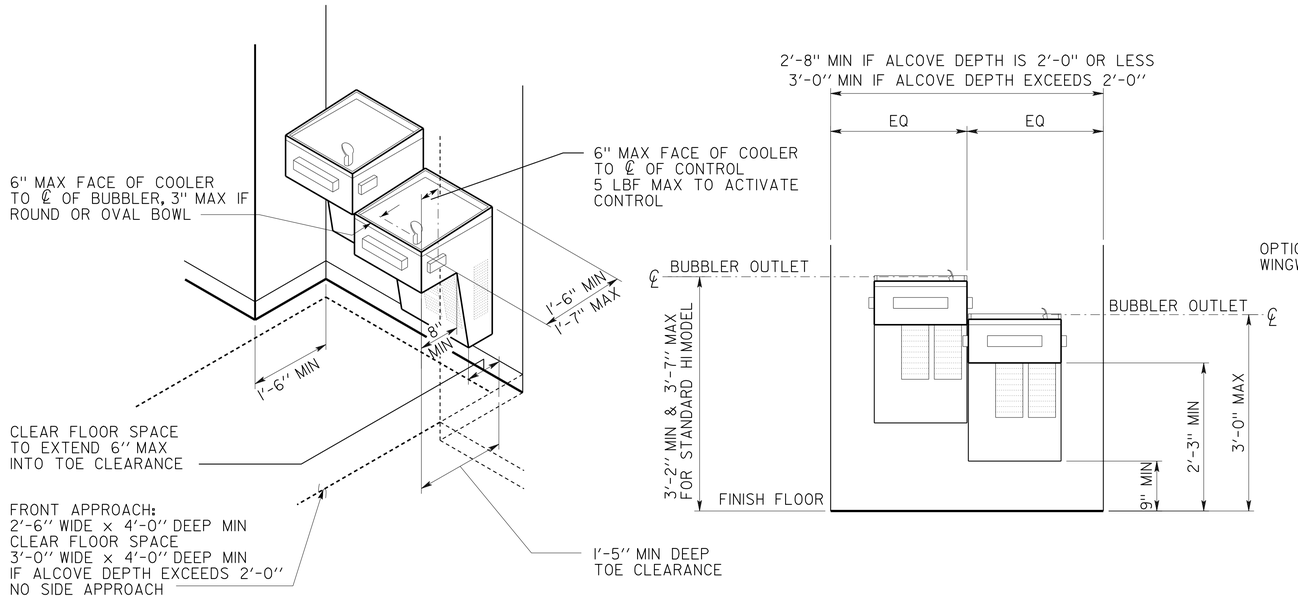

1 ELECTRIC WATER COOLER AT ALCOVE

FIXTURE TYPE MAY VARY
WIDTH OF ALCOVE MAY VARY
TWO FIXTURES WITH SEPARATE MOUNTING HEIGHTS MAY BE INSTALLED AT SEPARATE LOCATIONS.

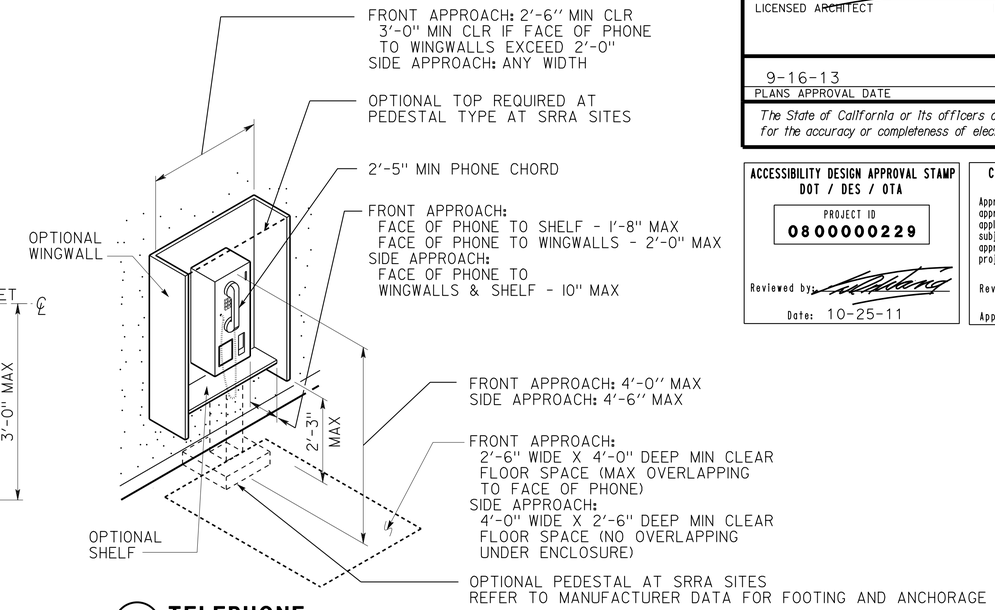

2 TELEPHONE

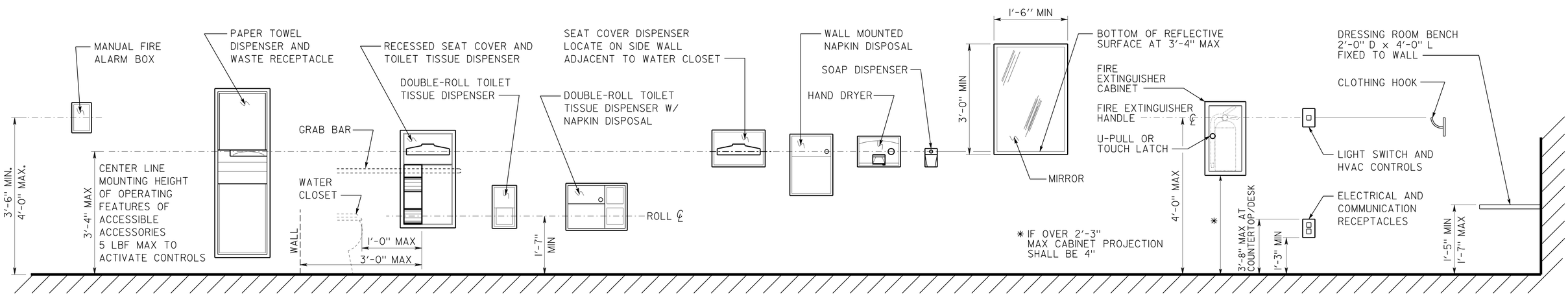

3 ACCESSORIES

DETAILS

NO SCALE UNLESS OTHERWISE NOTED

NOTE: SPECIFIC DETAILS OR NOTES ON OTHER SHEETS SHALL PREVAIL OVER STANDARD DETAILS AND NOTES ON THIS SHEET

STANDARD DRAWING
FILE NO. __-__-__ | DESIGN BY D. ALSEY | CHECKED Y.A. WANG | APPROVED RE Travis
DRAWING DATE 07-11 | DETAILS BY D. GOOD | CHECKED Y.A. WANG | DESIGN SUPERVISOR
SUBMITTED BY Y.A. WANG

STATE OF CALIFORNIA DEPARTMENT OF TRANSPORTATION

DIVISION OF ENGINEERING SERVICES ARCHITECTURAL AND STRUCTURAL DESIGN

BRIDGE NO. 540004R/L
POST MILE 107.3

C.V. KANE SAFETY ROADSIDE REST AREA REHABILITATION

ACCESSIBILITY — ACCESSIBILITY STANDARD DETAILS

SHEET A0-3.5

a0_35.dgn
TAEMWW Imperial Rev. 7/10 18-SEP-2013 11:01

ORIGINAL SCALE IN INCHES FOR REDUCED PLANS 0 1 2 3

UNIT 3600
PROJECT NUMBER & PHASE 08000002291
EA 000000

DISREGARD PRINTS BEARING EARLIER REVISION DATES
REVISION DATES (PRELIMINARY STAGE ONLY) - 07
SHEET OF

18-SEP-2013 11:01
a0_35.dgn

DIST.	COUNTY	ROUTE	POST MILES TOTAL PROJECT	SHEET NO.	TOTAL SHEETS
03, 08	Sac, SBd	5, 15	23.3, R107.3	87	330

LICENSED ARCHITECT DATE

LICENSED ARCHITECT JANUSZ PIETRZAK No. C-23915 Exp. 1/31/2015 STATE OF CALIFORNIA

9-16-13
PLANS APPROVAL DATE

The State of California or its officers or agents shall not be responsible for the accuracy or completeness of electronic copies of this plan sheet.

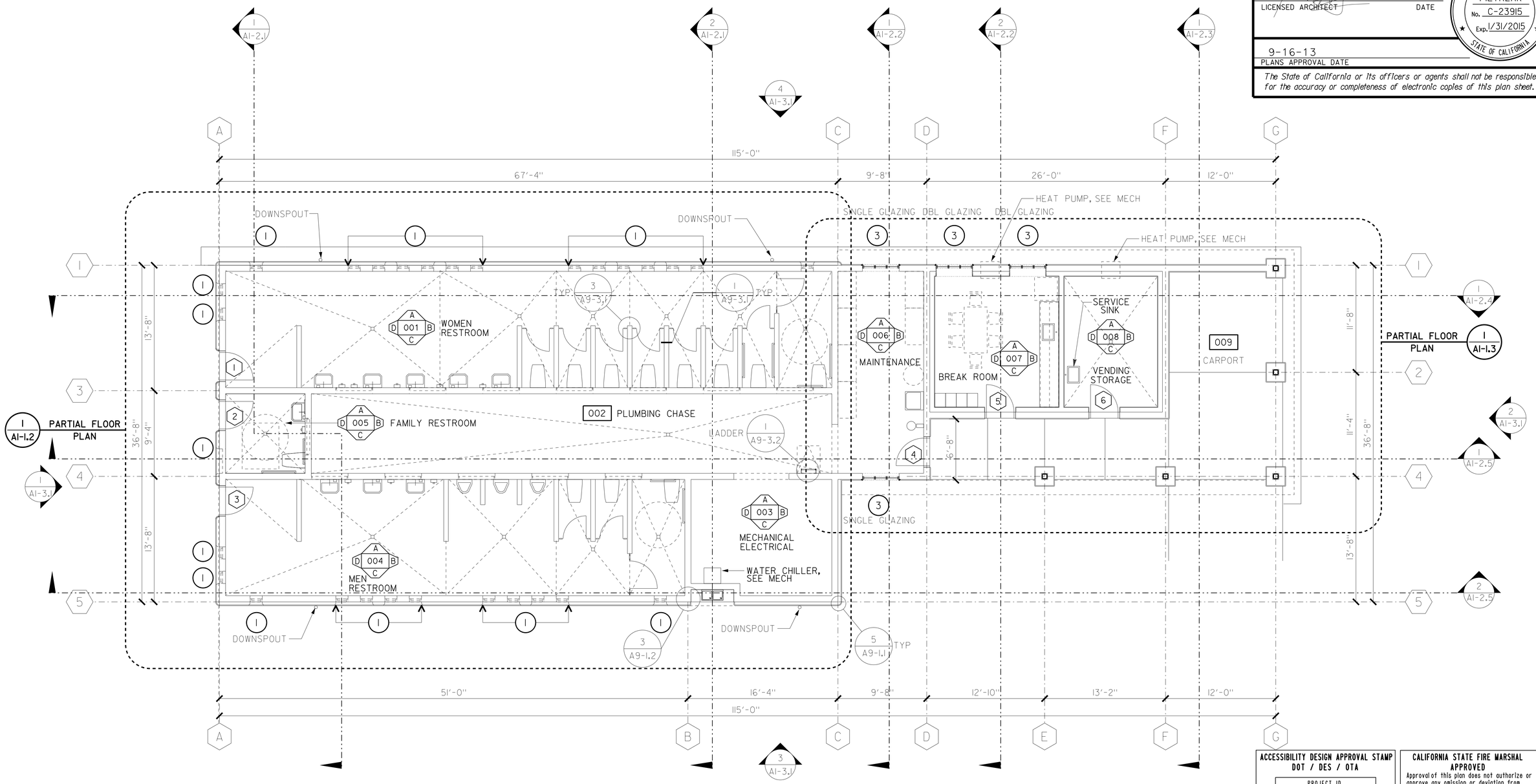

FLOOR PLAN
3/16"=1'-0"

ACCESSIBILITY DESIGN APPROVAL STAMP
DOT / DES / OTA
PROJECT ID
0800000229
Reviewed by:
Date: 10-25-11

CALIFORNIA STATE FIRE MARSHAL
APPROVED
Approval of this plan does not authorize or approve any omission or deviation from applicable regulations. Final approval is subject to field inspection. One set of approved plans shall be available on the project site at all times.
Reviewed by: FRANCIS SOLICH
Approval date: 09-11-13

DESIGN	BY JANUSZ PIETRZAK	CHECKED Donald E. Alsey	
DETAILS	BY C R ZERIO ROBERTINO QUIBIN	CHECKED Donald E. Alsey	
QUANTITIES	BY N/A	CHECKED N/A	

STATE OF **CALIFORNIA** DEPARTMENT OF TRANSPORTATION

DIVISION OF ENGINEERING SERVICES
ARCHITECTURAL AND STRUCTURAL DESIGN

BRIDGE NO. 540004R/L
POST MILE 107.3

C.V. KANE SAFETY ROADSIDE REST AREA REHABILITATION
STRUCTURE I COMFORT STATION A
FLOOR PLAN

SHEET **A1-1.1**

a1-11.dgn
TAEMWW Imperial Rev. 7/10 18-SEP-2013 11:01

ORIGINAL SCALE IN INCHES FOR REDUCED PLANS 0 1 2 3

UNIT 3600
PROJECT NUMBER & PHASE 08000002291
EA 000000

DISREGARD PRINTS BEARING EARLIER REVISION DATES → - 07

REVISION DATES (PRELIMINARY STAGE ONLY) SHEET X OF X

18-SEP-2013 11:01
a1-11.dgn

DIST.	COUNTY	ROUTE	POST MILES TOTAL PROJECT	SHEET NO.	TOTAL SHEETS
03, 08	Sac, SBd	5, 15	23.3, R107.3	88	330

LICENSED ARCHITECT — DATE

LICENSED ARCHITECT JANUSZ PIETRZAK No. C-23915 Exp. 1/31/2015 STATE OF CALIFORNIA

9-16-13
PLANS APPROVAL DATE

The State of California or its officers or agents shall not be responsible for the accuracy or completeness of electronic copies of this plan sheet.

ACCESSIBILITY DESIGN APPROVAL STAMP DOT / DES / OTA
PROJECT ID **0800000229**
Reviewed by:
Date: 10-25-11

CALIFORNIA STATE FIRE MARSHAL APPROVED
Approval of this plan does not authorize or approve any omission or deviation from applicable regulations. Final approval is subject to field inspection. One set of approved plans shall be available on the project site at all times.
Reviewed by: FRANCIS SOLICH
Approval date: 09-11-13

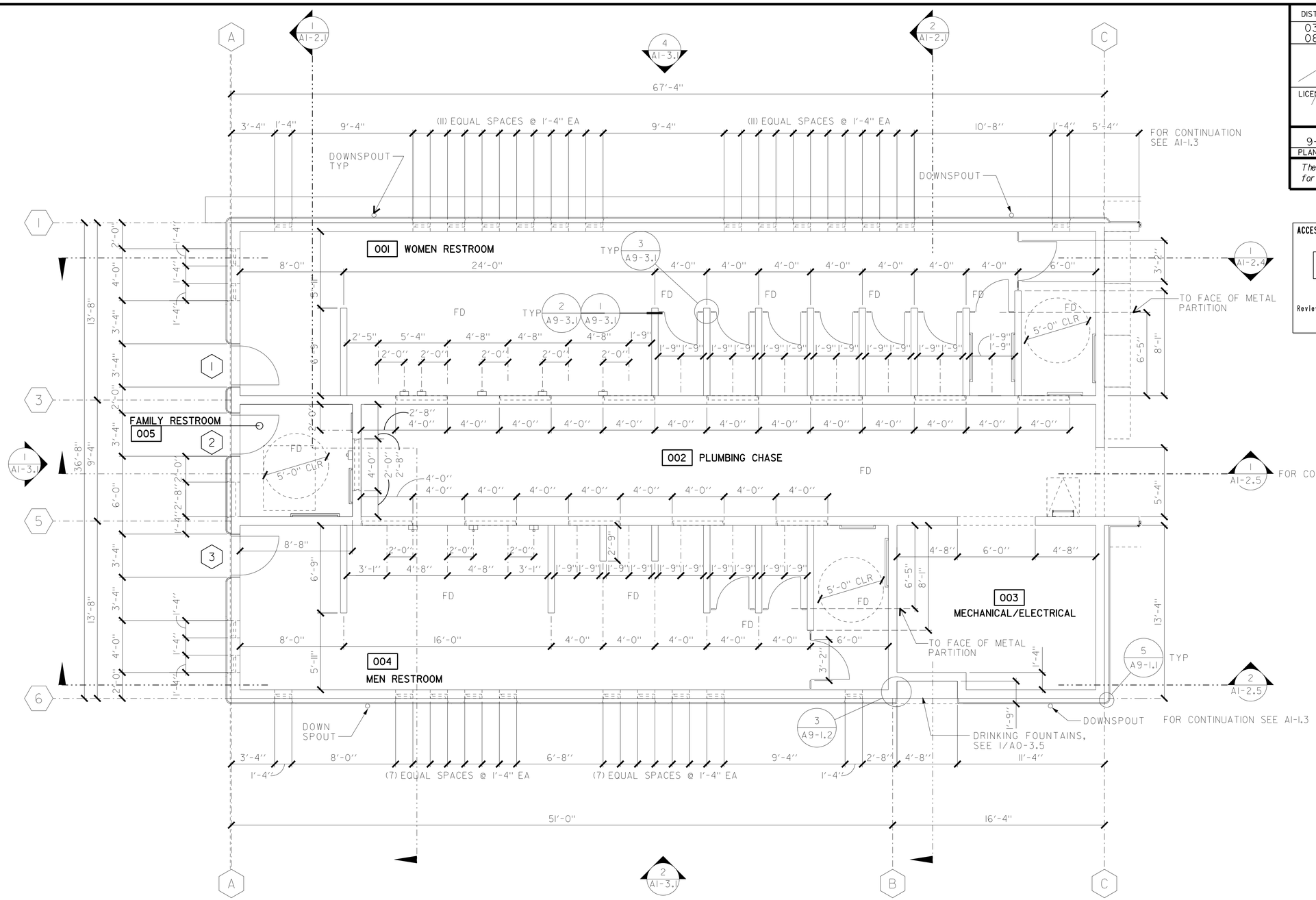

PARTIAL FLOOR PLAN
1/4"=1'-0"

DESIGN	BY JANUSZ PIETRZAK	CHECKED Donald E. Alsey	
DETAILS	BY C R ZERIO ROBERTINO QUIBIN	CHECKED Donald E. Alsey	
QUANTITIES	BY N/A	CHECKED N/A	

STATE OF CALIFORNIA DEPARTMENT OF TRANSPORTATION

DIVISION OF ENGINEERING SERVICES ARCHITECTURAL AND STRUCTURAL DESIGN

BRIDGE NO. 540004R/L
POST MILE 107.3

C.V. KANE SAFETY ROADSIDE REST AREA REHABILITATION
STRUCTURE I COMFORT STATION A
PARTIAL FLOOR PLAN

SHEET **A1-1.2**

a1-12.dgn
TAEMWW Imperial Rev. 7/10 18-SEP-2013 11:02

ORIGINAL SCALE IN INCHES FOR REDUCED PLANS 0 1 2 3

UNIT 3600
PROJECT NUMBER & PHASE 08000002291
EA 000000

DISREGARD PRINTS BEARING EARLIER REVISION DATES → - 07

REVISION DATES (PRELIMINARY STAGE ONLY) SHEET X OF X

18-SEP-2013 11:02
a1-12.dgn

DIST.	COUNTY	ROUTE	POST MILES TOTAL PROJECT	SHEET NO.	TOTAL SHEETS
03, 08	Sac, SBd	5, 15	23.3, R107.3	89	330

LICENSED ARCHITECT — DATE

LICENSED ARCHITECT JANUSZ PIETRZAK No. C-23915 Exp. 1/31/2015 STATE OF CALIFORNIA

9-16-13
PLANS APPROVAL DATE

The State of California or its officers or agents shall not be responsible for the accuracy or completeness of electronic copies of this plan sheet.

ACCESSIBILITY DESIGN APPROVAL STAMP DOT / DES / OTA

PROJECT ID **0800000229**

Reviewed by:

Date: 10-25-11

CALIFORNIA STATE FIRE MARSHAL APPROVED

Approval of this plan does not authorize or approve any omission or deviation from applicable regulations. Final approval is subject to field inspection. One set of approved plans shall be available on the project site at all times.

Reviewed by: FRANCIS SOLICH

Approval date: 09-11-13

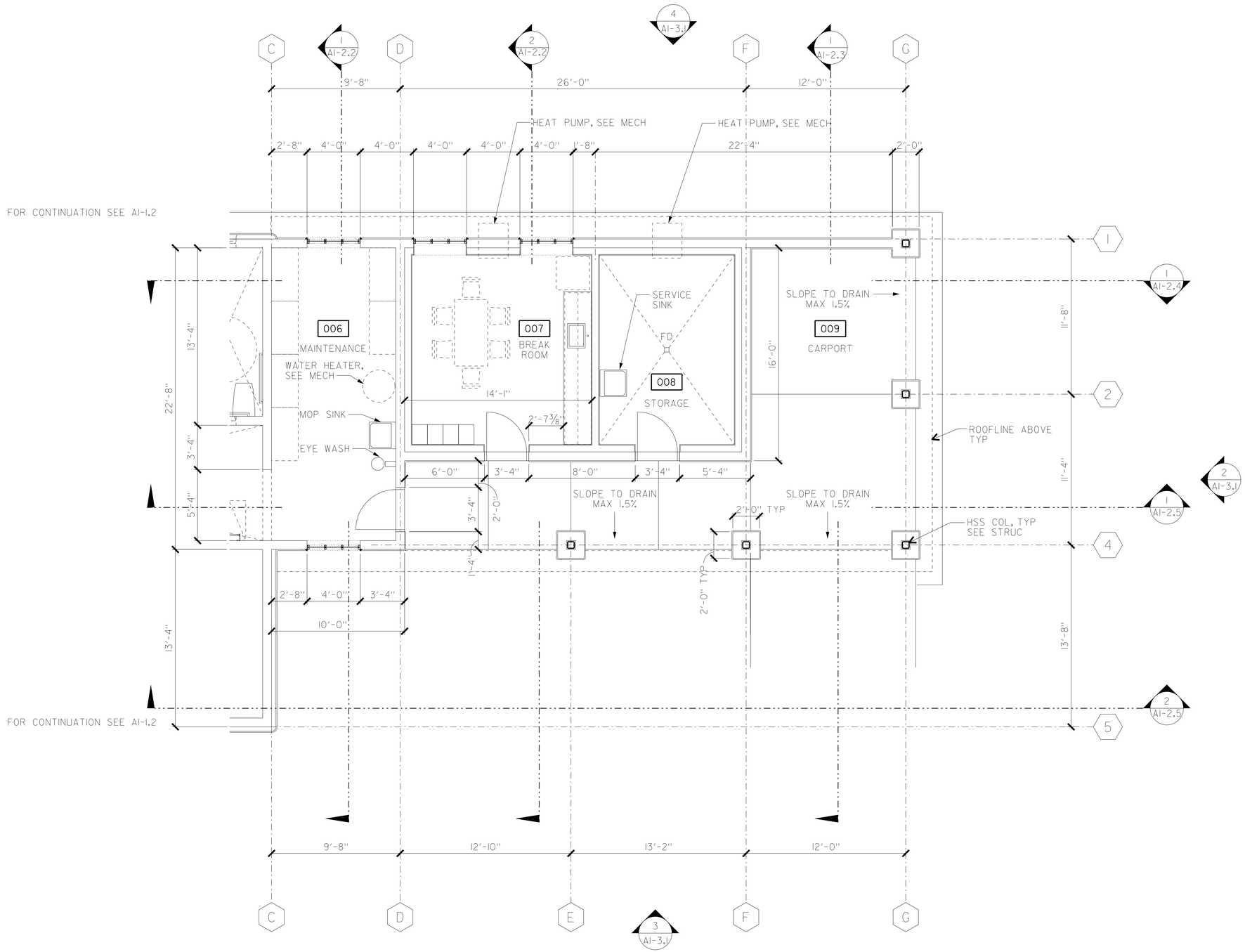

PARTIAL FLOOR PLAN

1/4"=1'-0"

DESIGN	BY JANUSZ PIETRZAK	CHECKED Donald E. Alsey	
DETAILS	BY C R ZERIO ROBERTINO QUIBIN	CHECKED Donald E. Alsey	
QUANTITIES	BY N/A	CHECKED N/A	

STATE OF CALIFORNIA DEPARTMENT OF TRANSPORTATION

DIVISION OF ENGINEERING SERVICES ARCHITECTURAL AND STRUCTURAL DESIGN

BRIDGE NO. 540004R/L

POST MILE 107.3

C.V. KANE SAFETY ROADSIDE REST AREA REHABILITATION

STRUCTURE I COMFORT STATION A

PARTIAL FLOOR PLAN

SHEET **A1-1.3**

a1-13.dgn
TAEMWW Imperial Rev. 7/10 18-SEP-2013 11:02

ORIGINAL SCALE IN INCHES FOR REDUCED PLANS 0 1 2 3

UNIT 3600
PROJECT NUMBER & PHASE 08000002291
EA 000000

DISREGARD PRINTS BEARING EARLIER REVISION DATES

REVISION DATES (PRELIMINARY STAGE ONLY) - -07

SHEET X OF X

18-SEP-2013 11:02
a1-13.dgn

DIST.	COUNTY	ROUTE	POST MILES TOTAL PROJECT	SHEET NO.	TOTAL SHEETS
03, 08	Sac, SBd	5, 15	23.3, R107.3	90	330

LICENSED ARCHITECT — DATE

LICENSED ARCHITECT JANUSZ PIETRZAK No. C-23915 Exp. 1/31/2015 STATE OF CALIFORNIA

9-16-13
PLANS APPROVAL DATE

The State of California or its officers or agents shall not be responsible for the accuracy or completeness of electronic copies of this plan sheet.

ACCESSIBILITY DESIGN APPROVAL STAMP
DOT / DES / OTA
PROJECT ID **0800000229**
Reviewed by:
Date: 10-25-11

CALIFORNIA STATE FIRE MARSHAL APPROVED
Approval of this plan does not authorize or approve any omission or deviation from applicable regulations. Final approval is subject to field inspection. One set of approved plans shall be available on the project site at all times.
Reviewed by: FRANCIS SOLICH
Approval date: 09-11-13

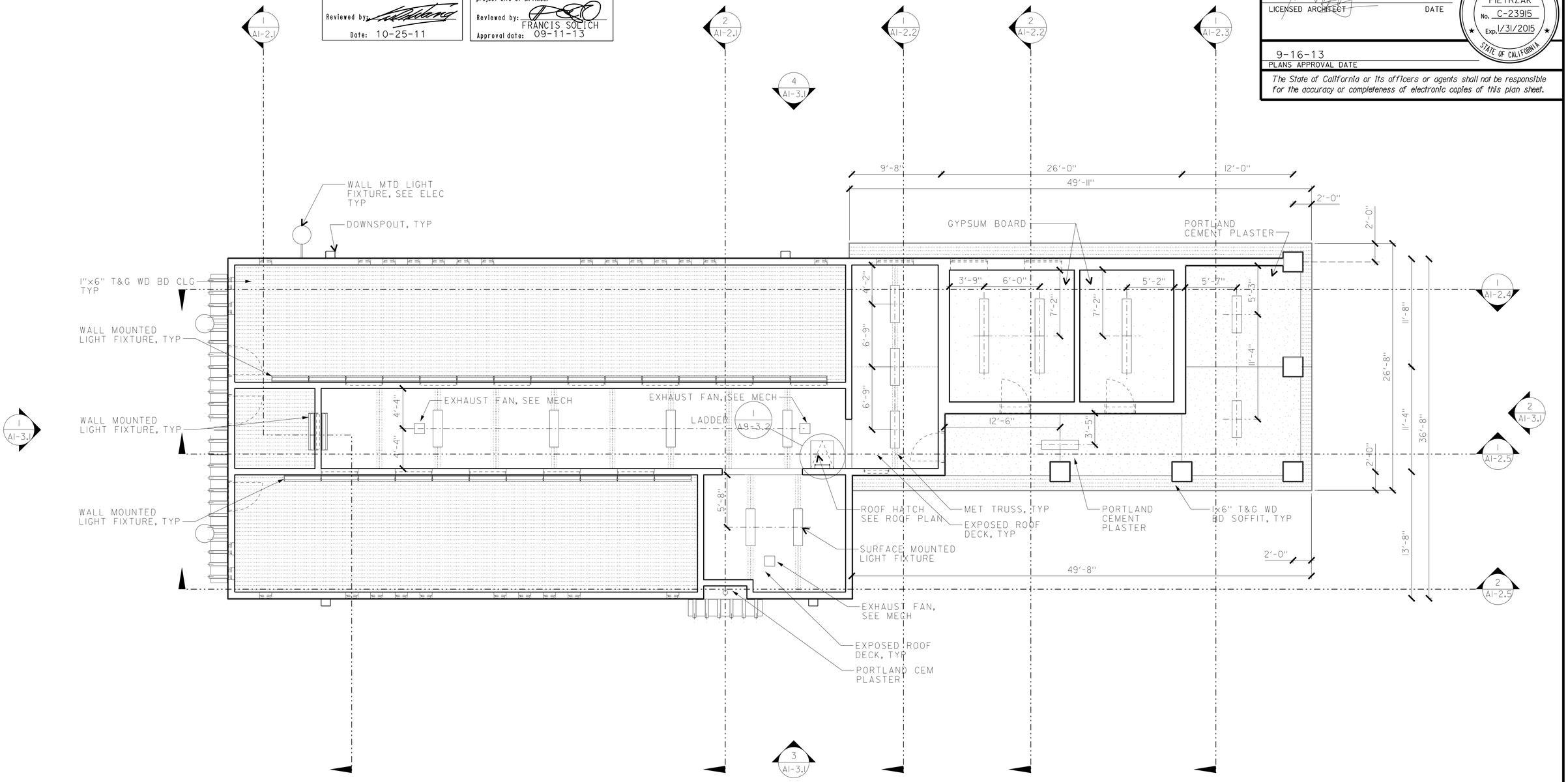

REFLECTED CEILING PLAN
3/16"=1'-0"

DESIGN	BY JANUSZ PIETRZAK	CHECKED Donald E. Alvey	
DETAILS	BY C R ZERIO ROBERTINO QUIBIN	CHECKED Donald E. Alvey	
QUANTITIES	BY N/A	CHECKED N/A	

STATE OF CALIFORNIA
DEPARTMENT OF TRANSPORTATION

DIVISION OF ENGINEERING SERVICES
ARCHITECTURAL AND STRUCTURAL DESIGN

BRIDGE NO. 540004R/L
POST MILE 107.3

C.V. KANE SAFETY ROADSIDE REST AREA REHABILITATION
STRUCTURE I COMFORT STATION A
REFLECTED CEILING PLAN

SHEET **A1-1.4**

a1-14.dgn
TAEMWW Imperial Rev. 7/10 18-SEP-2013 11:02

ORIGINAL SCALE IN INCHES FOR REDUCED PLANS 0 1 2 3

UNIT 3600
PROJECT NUMBER & PHASE 08000002291
EA 000000

DISREGARD PRINTS BEARING EARLIER REVISION DATES → - -07

REVISION DATES (PRELIMINARY STAGE ONLY) SHEET X OF X

18-SEP-2013 11:02
a1-14.dgn

DIST.	COUNTY	ROUTE	POST MILES TOTAL PROJECT	SHEET NO.	TOTAL SHEETS
03, 08	Sac, SBd	5, 15	23.3, R107.3	91	330

LICENSED ARCHITECT DATE

LICENSED ARCHITECT JANUSZ PIETRZAK No. C-23915 Exp. 1/31/2015 STATE OF CALIFORNIA

9-16-13
PLANS APPROVAL DATE

The State of California or its officers or agents shall not be responsible for the accuracy or completeness of electronic copies of this plan sheet.

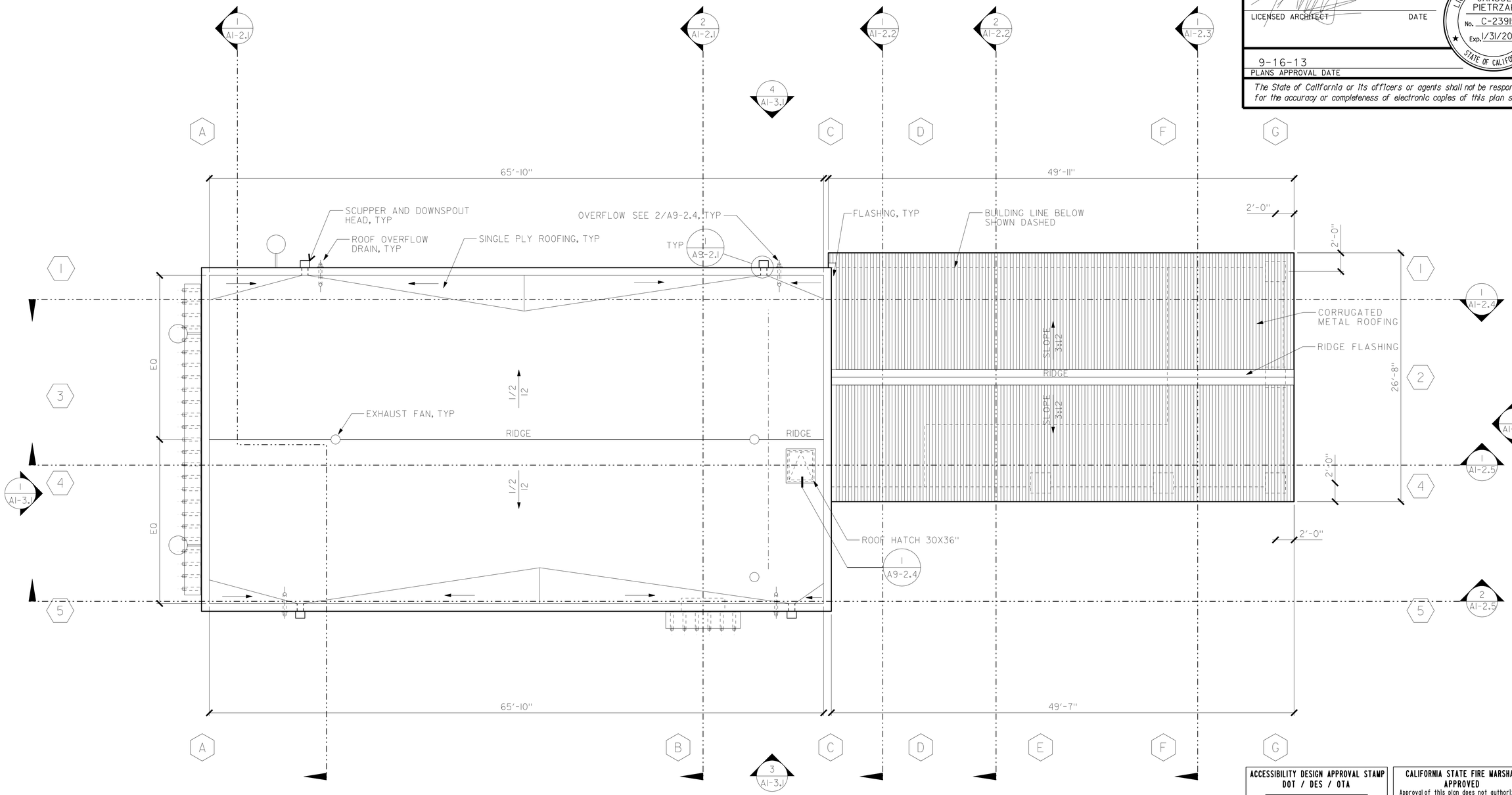

ROOF PLAN
3/16"=1'-0"

ACCESSIBILITY DESIGN APPROVAL STAMP DOT / DES / OTA
PROJECT ID 0800000229
Reviewed by:
Date: 10-25-11

CALIFORNIA STATE FIRE MARSHAL APPROVED
Approval of this plan does not authorize or approve any omission or deviation from applicable regulations. Final approval is subject to field inspection. One set of approved plans shall be available on the project site at all times.
Reviewed by: FRANCIS SOLICH
Approval date: 09-11-13

	BY	CHECKED
DESIGN	JANUSZ PIETRZAK	Donald E. Alsey
DETAILS	C R ZERIO ROBERTINO QUIBIN	Donald E. Alsey
QUANTITIES	N/A	N/A

STATE OF CALIFORNIA DEPARTMENT OF TRANSPORTATION

DIVISION OF ENGINEERING SERVICES ARCHITECTURAL AND STRUCTURAL DESIGN

BRIDGE NO. 540004R/L
POST MILE 107.3

STRUCTURE I COMFORT STATION A

C.V. KANE SAFETY ROADSIDE REST AREA REHABILITATION

ROOF PLAN

SHEET **A1-1.5**

a1-15.dgn
TAEMWW Imperial Rev. 7/10 18-SEP-2013 11:19

ORIGINAL SCALE IN INCHES FOR REDUCED PLANS 0 1 2 3

UNIT 3600
PROJECT NUMBER & PHASE 08000002291
EA 000000

DISREGARD PRINTS BEARING EARLIER REVISION DATES → - -07

REVISION DATES (PRELIMINARY STAGE ONLY) SHEET X OF X

18-SEP-2013 11:19
a1-15.dgn

DIST.	COUNTY	ROUTE	POST MILES TOTAL PROJECT	SHEET NO.	TOTAL SHEETS
03, 08	Sac, SBd	5, 15	23.3, R107.3	92	330

LICENSED ARCHITECT — DATE

LICENSED ARCHITECT JANUSZ PIETRZAK No. C-23915 Exp. 1/31/2015 STATE OF CALIFORNIA

9-16-13
PLANS APPROVAL DATE

The State of California or its officers or agents shall not be responsible for the accuracy or completeness of electronic copies of this plan sheet.

ACCESSIBILITY DESIGN APPROVAL STAMP DOT / DES / OTA

PROJECT ID **0800000229**

Reviewed by:

Date: 10-25-11

CALIFORNIA STATE FIRE MARSHAL APPROVED

Approval of this plan does not authorize or approve any omission or deviation from applicable regulations. Final approval is subject to field inspection. One set of approved plans shall be available on the project site at all times.

Reviewed by: FRANCIS SOLICH

Approval date: 09-11-13

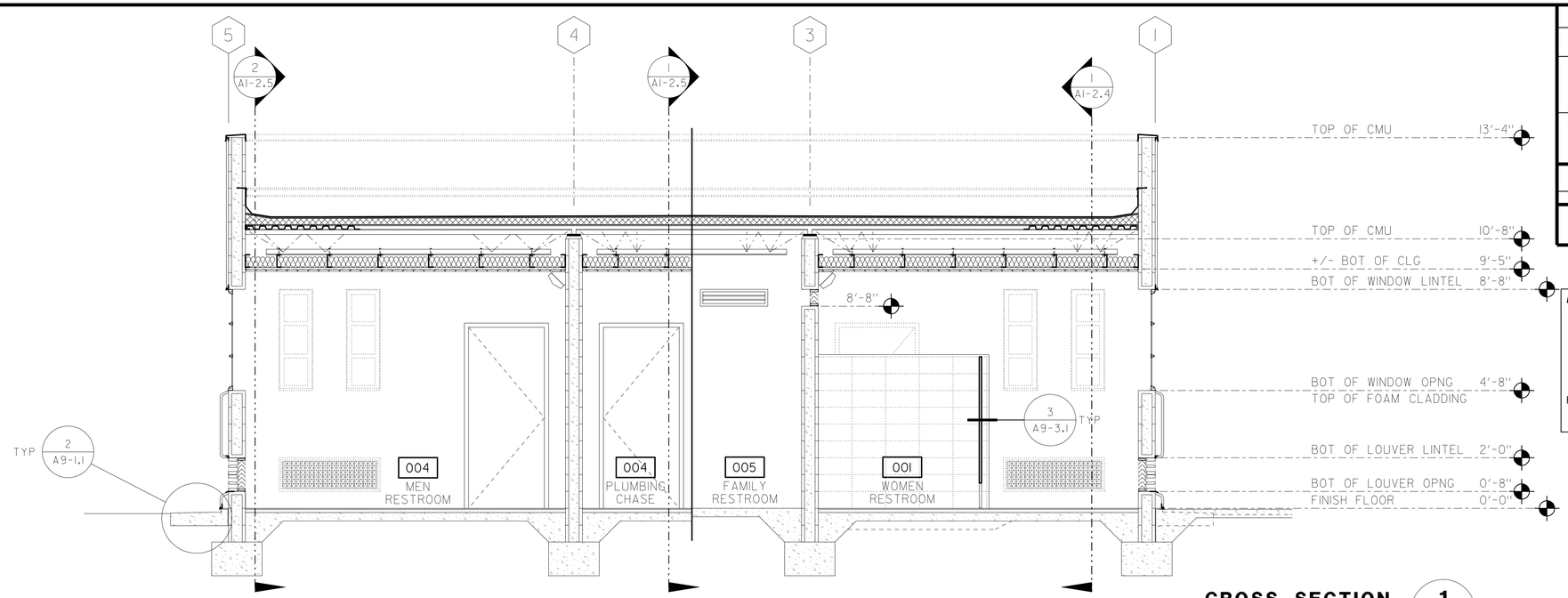

CROSS SECTION 1
3/8"=1'-0"

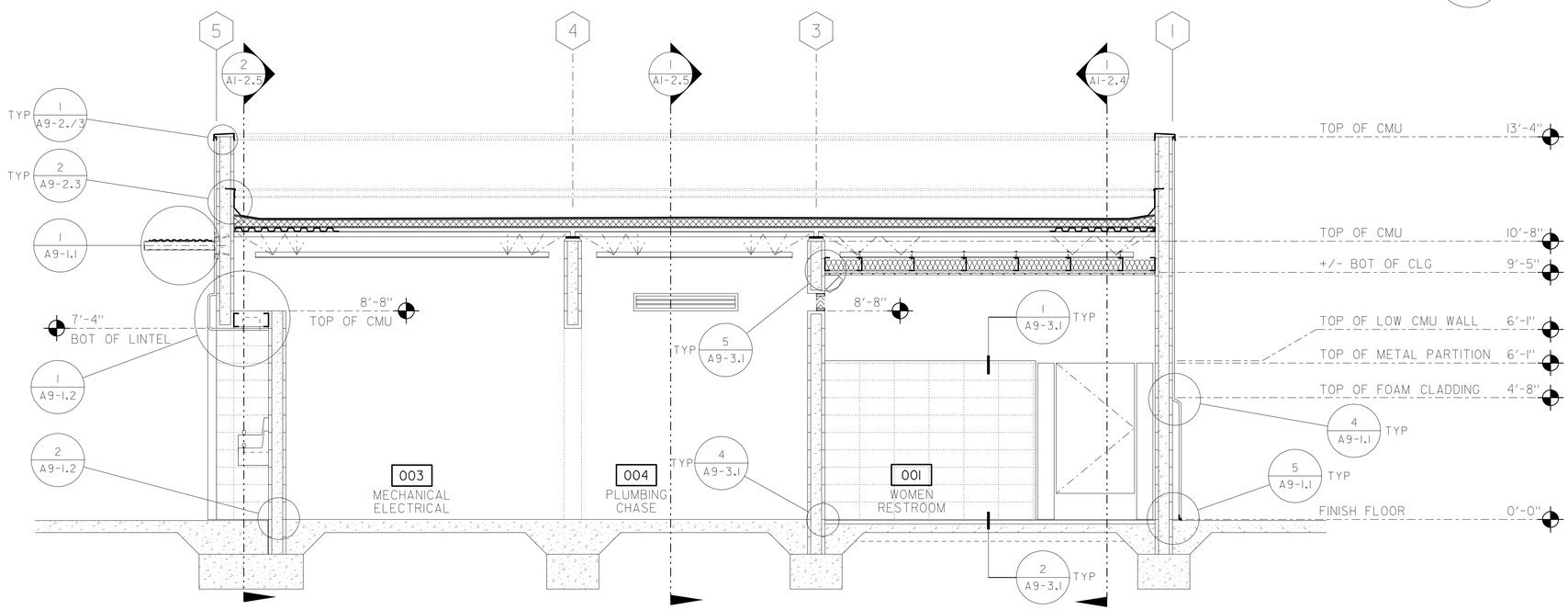

CROSS SECTION 2
3/8"=1'-0"

DESIGN	BY JANUSZ PIETRZAK	CHECKED Donald E. Alsey	
DETAILS	BY C R ZERIO ROBERTINO QUIBIN	CHECKED Donald E. Alsey	
QUANTITIES	BY N/A	CHECKED N/A	

STATE OF **CALIFORNIA** DEPARTMENT OF TRANSPORTATION

DIVISION OF ENGINEERING SERVICES
ARCHITECTURAL AND STRUCTURAL DESIGN

BRIDGE NO. 540004R/L
POST MILE 107.3

C.V. KANE SAFETY ROADSIDE REST AREA REHABILITATION

STRUCTURE I COMFORT STATION A

BUILDING SECTIONS

SHEET **A1-2.1**

ORIGINAL SCALE IN INCHES FOR REDUCED PLANS 0 1 2 3

UNIT 3600
PROJECT NUMBER & PHASE 08000002291
EA 000000

DISREGARD PRINTS BEARING EARLIER REVISION DATES → - 07

REVISION DATES (PRELIMINARY STAGE ONLY) | SHEET X | OF X

a1-21.dgn
TAEMWW Imperial Rev. 7/10 18-SEP-2013 11:19

18-SEP-2013 11:19
a1-21.dgn

DIST.	COUNTY	ROUTE	POST MILES TOTAL PROJECT	SHEET NO.	TOTAL SHEETS
03, 08	Sac, SBd	5, 15	23.3, R107.3	93	330

LICENSED ARCHITECT DATE

LICENSED ARCHITECT JANUSZ PIETRZAK No. C-23915 Exp. 1/31/2015 STATE OF CALIFORNIA

9-16-13
PLANS APPROVAL DATE

The State of California or its officers or agents shall not be responsible for the accuracy or completeness of electronic copies of this plan sheet.

ACCESSIBILITY DESIGN APPROVAL STAMP DOT / DES / OTA

PROJECT ID **0800000229**

Reviewed by:

Date: 10-25-11

CALIFORNIA STATE FIRE MARSHAL APPROVED

Approval of this plan does not authorize or approve any omission or deviation from applicable regulations. Final approval is subject to field inspection. One set of approved plans shall be available on the project site at all times.

Reviewed by: FRANCIS SOLICH

Approval date: 09-11-13

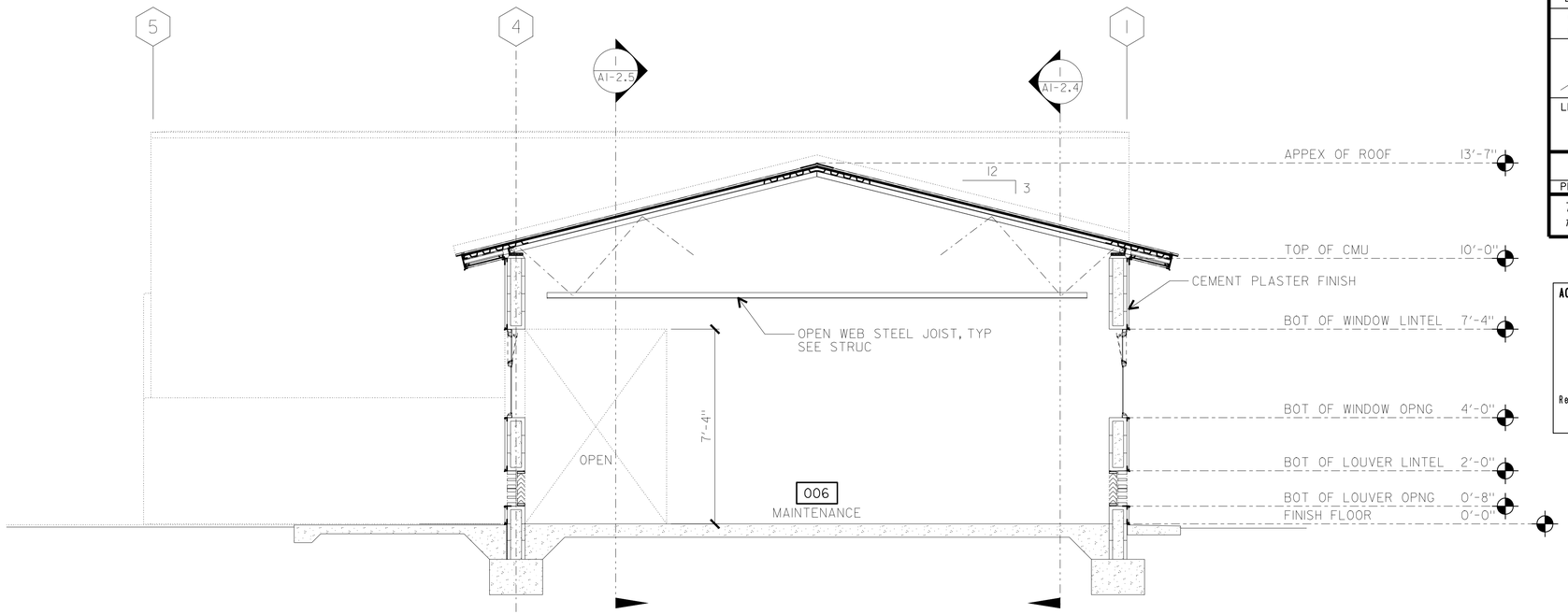

CROSS SECTION 1
3/8"=1'-0"

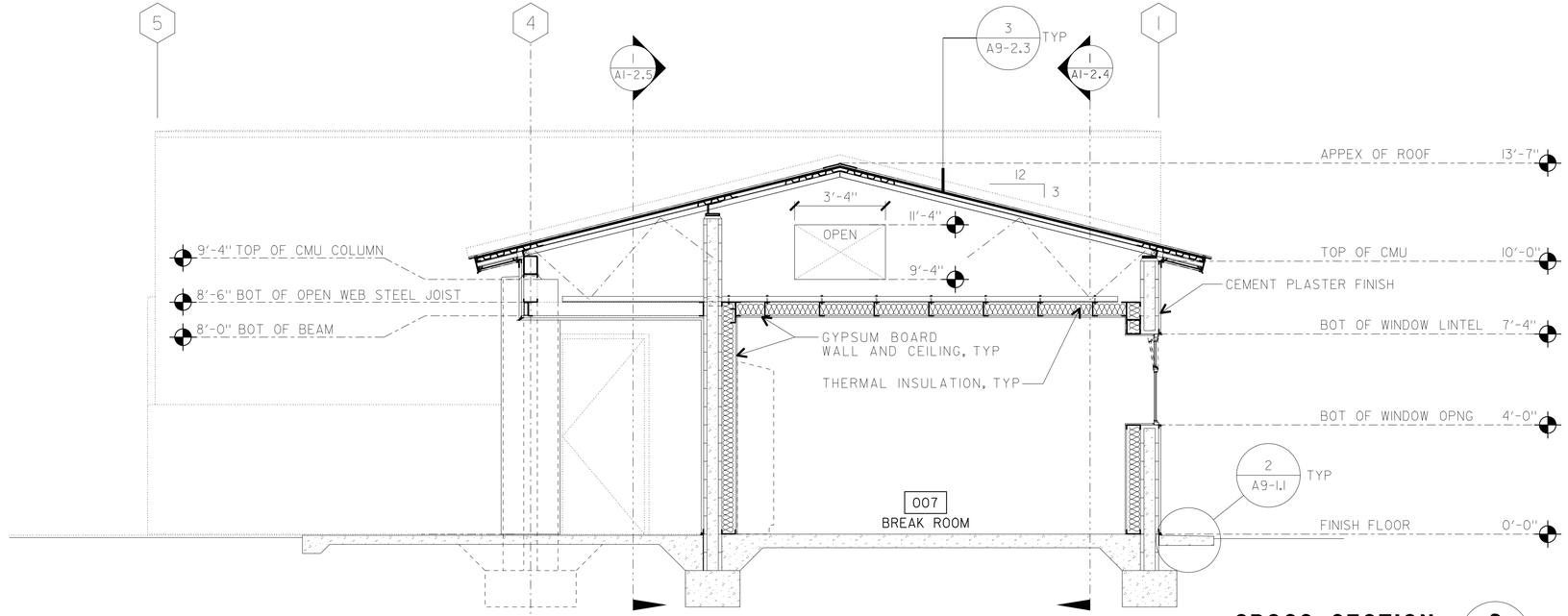

CROSS SECTION 2
3/8"=1'-0"

DESIGN	BY JANUSZ PIETRZAK	CHECKED Donald E. Alsey	
DETAILS	BY C R ZERIO ROBERTINO QUIBIN	CHECKED Donald E. Alsey	
QUANTITIES	BY N/A	CHECKED N/A	

STATE OF **CALIFORNIA** DEPARTMENT OF TRANSPORTATION

DIVISION OF ENGINEERING SERVICES ARCHITECTURAL AND STRUCTURAL DESIGN

BRIDGE NO. 540004R/L
POST MILE 107.3

C.V. KANE SAFETY ROADSIDE REST AREA REHABILITATION

STRUCTURE I COMFORT STATION A

BUILDING SECTIONS

SHEET **A1-2.2**

a1-22.dgn
TAEMWW Imperial Rev. 7/10 18-SEP-2013 11:19

ORIGINAL SCALE IN INCHES FOR REDUCED PLANS 0 1 2 3

UNIT 3600
PROJECT NUMBER & PHASE 08000002291
EA 000000

DISREGARD PRINTS BEARING EARLIER REVISION DATES → - 07

REVISION DATES (PRELIMINARY STAGE ONLY)

SHEET X OF X

18-SEP-2013 11:19
a1-22.dgn

DIST.	COUNTY	ROUTE	POST MILES TOTAL PROJECT	SHEET NO.	TOTAL SHEETS
03, 08	Sac, SBd	5, 15	23.3, R107.3	94	330

LICENSED ARCHITECT — DATE

LICENSED ARCHITECT JANUSZ PIETRZAK No. C-23915 Exp. 1/31/2015 STATE OF CALIFORNIA

9-16-13
PLANS APPROVAL DATE

The State of California or its officers or agents shall not be responsible for the accuracy or completeness of electronic copies of this plan sheet.

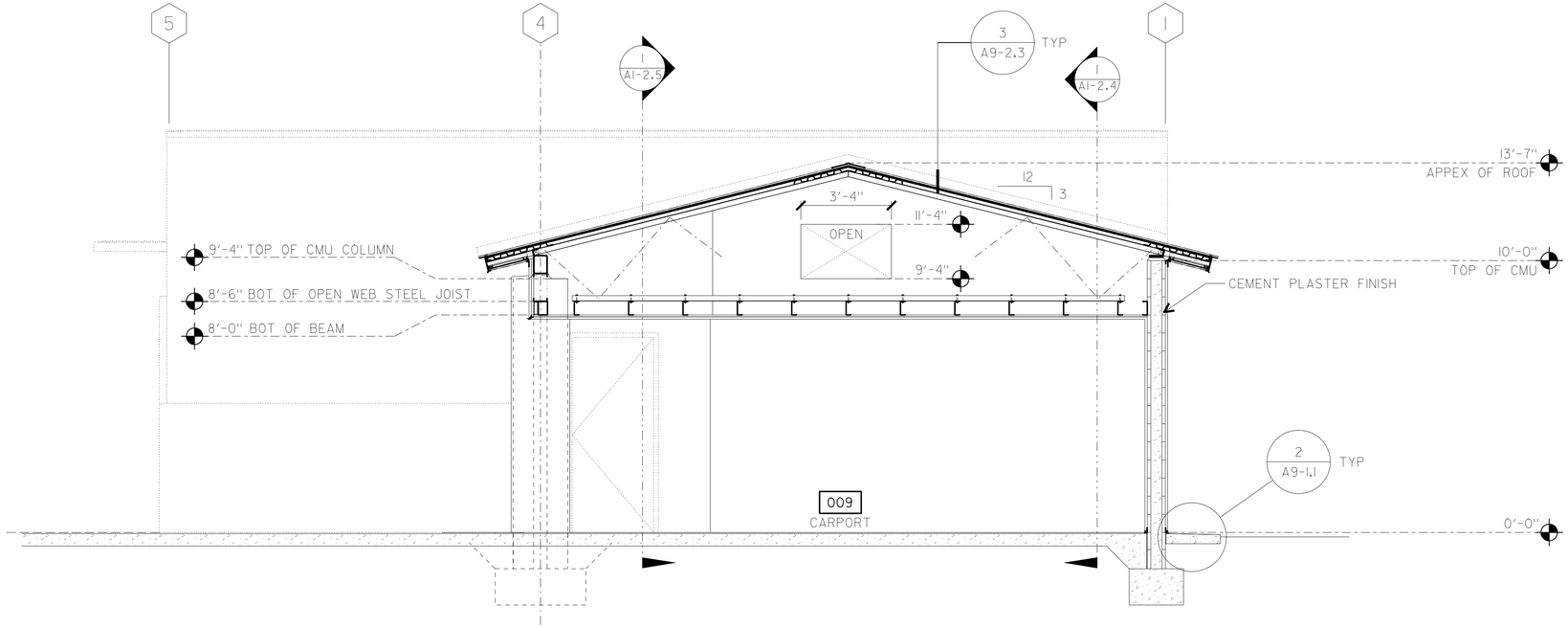

CROSS SECTION 1
3/8"=1'-0"

ACCESSIBILITY DESIGN APPROVAL STAMP DOT / DES / OTA
PROJECT ID **0800000229**
Reviewed by:
Date: 10-25-11

CALIFORNIA STATE FIRE MARSHAL APPROVED
Approval of this plan does not authorize or approve any omission or deviation from applicable regulations. Final approval is subject to field inspection. One set of approved plans shall be available on the project site at all times.
Reviewed by: FRANCIS SOLICH
Approval date: 09-11-13

DESIGN	BY JANUSZ PIETRZAK	CHECKED Donald E. Alsey	
DETAILS	BY C R ZERIO ROBERTINO QUIBIN	CHECKED Donald E. Alsey	
QUANTITIES	BY N/A	CHECKED N/A	

STATE OF CALIFORNIA
DEPARTMENT OF TRANSPORTATION

DIVISION OF ENGINEERING SERVICES
ARCHITECTURAL AND STRUCTURAL DESIGN

BRIDGE NO. 540004R/L
POST MILE 107.3

C.V. KANE SAFETY ROADSIDE REST AREA REHABILITATION
STRUCTURE I COMFORT STATION A
BUILDING SECTIONS

SHEET **A1-2.3**

a1-23.dgn
TAEMWW Imperial Rev. 7/10 18-SEP-2013 11:19

ORIGINAL SCALE IN INCHES FOR REDUCED PLANS 0 1 2 3

UNIT 3600
PROJECT NUMBER & PHASE 08000002291
EA 000000

DISREGARD PRINTS BEARING EARLIER REVISION DATES →
REVISION DATES (PRELIMINARY STAGE ONLY) - 07
SHEET X OF X

18-SEP-2013 11:19
a1-23.dgn

DIST.	COUNTY	ROUTE	POST MILES TOTAL PROJECT	SHEET NO.	TOTAL SHEETS
03, 08	Sac, SBd	5, 15	23.3, R107.3	95	330

LICENSED ARCHITECT DATE

LICENSED ARCHITECT JANUSZ PIETRZAK No. C-23915 Exp. 1/31/2015 STATE OF CALIFORNIA

9-16-13
PLANS APPROVAL DATE

The State of California or its officers or agents shall not be responsible for the accuracy or completeness of electronic copies of this plan sheet.

ACCESSIBILITY DESIGN APPROVAL STAMP DOT / DES / OTA

PROJECT ID **0800000229**

Reviewed by:

Date: 10-25-11

CALIFORNIA STATE FIRE MARSHAL APPROVED

Approval of this plan does not authorize or approve any omission or deviation from applicable regulations. Final approval is subject to field inspection. One set of approved plans shall be available on the project site at all times.

Reviewed by: FRANCIS SOLICH

Approval date: 09-11-13

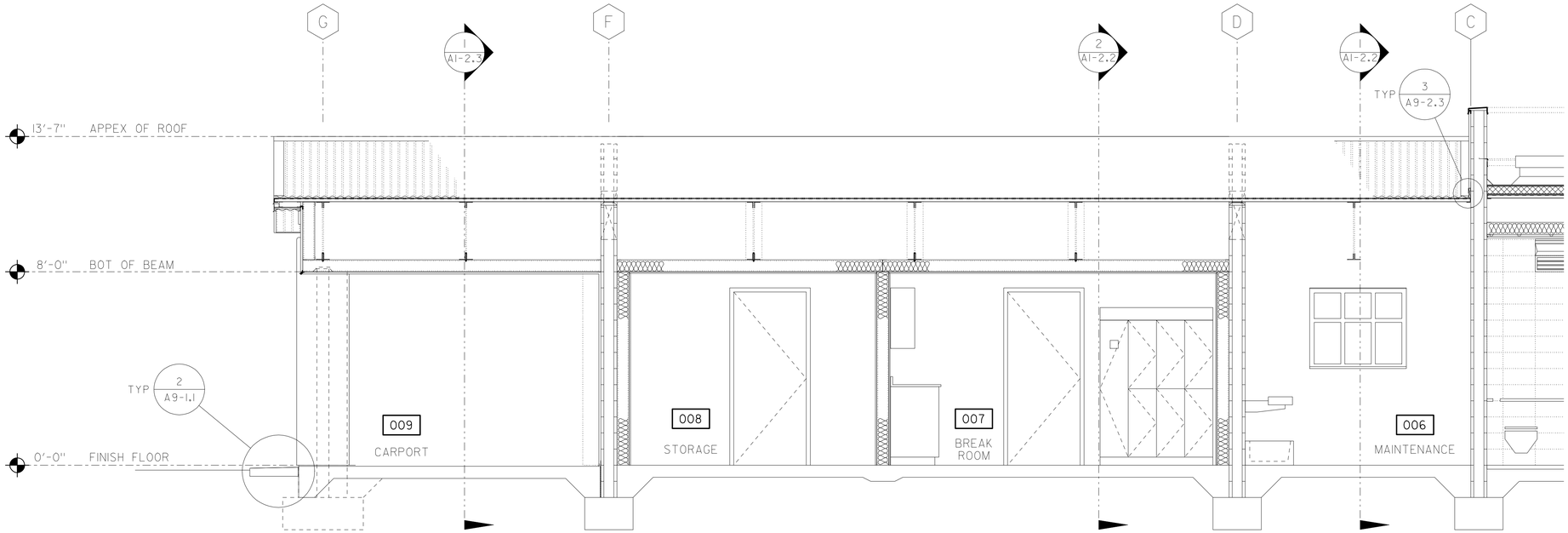

LONG SECTION 1
3/8"=1'-0"

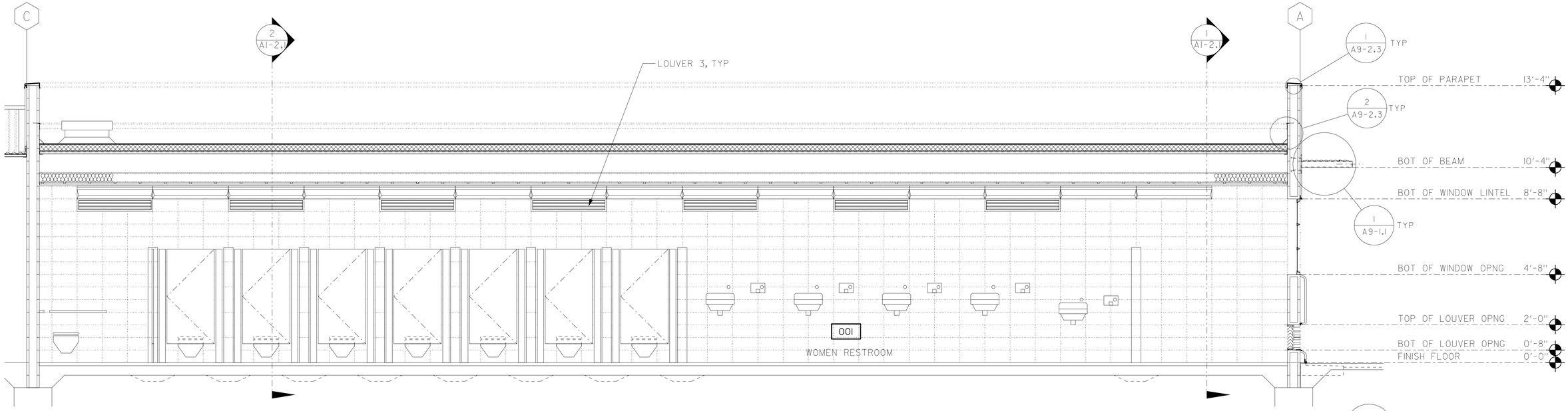

LONG SECTION 2
3/8"=1'-0"

DESIGN	BY JANUSZ PIETRZAK	CHECKED Donald E. Alsey	
DETAILS	BY C R ZERIO ROBERTINO QUIBIN	CHECKED Donald E. Alsey	
QUANTITIES	BY N/A	CHECKED N/A	

STATE OF **CALIFORNIA** DEPARTMENT OF TRANSPORTATION

DIVISION OF ENGINEERING SERVICES
ARCHITECTURAL AND STRUCTURAL DESIGN

BRIDGE NO. 540004R/L
POST MILE 107.3

C.V. KANE SAFETY ROADSIDE REST AREA REHABILITATION

STRUCTURE I COMFORT STATION A

BUILDING SECTIONS

SHEET **A1-2.4**

a1-24.dgn
TAEMWW Imperial Rev. 7/10 18-SEP-2013 11:19

ORIGINAL SCALE IN INCHES FOR REDUCED PLANS 0 1 2 3

UNIT 3600
PROJECT NUMBER & PHASE 08000002291
EA 000000

DISREGARD PRINTS BEARING EARLIER REVISION DATES → - 07

REVISION DATES (PRELIMINARY STAGE ONLY) SHEET X OF X

18-SEP-2013 11:19
a1-24.dgn

DIST.	COUNTY	ROUTE	POST MILES TOTAL PROJECT	SHEET NO.	TOTAL SHEETS
03, 08	Sac, SBd	5, 15	23.3, R107.3	96	330

ACCESSIBILITY DESIGN APPROVAL STAMP
DOT / DES / OTA
PROJECT ID
0800000229
Reviewed by:
Date: 10-25-11

CALIFORNIA STATE FIRE MARSHAL
APPROVED
Approval of this plan does not authorize or approve any omission or deviation from applicable regulations. Final approval is subject to field inspection. One set of approved plans shall be available on the project site at all times.
Reviewed by: FRANCIS SOLICH
Approval date: 09-11-13

LICENSED ARCHITECT — DATE

LICENSED ARCHITECT JANUSZ PIETRZAK No. C-23915 Exp. 1/31/2015 STATE OF CALIFORNIA

9-16-13
PLANS APPROVAL DATE

The State of California or its officers or agents shall not be responsible for the accuracy or completeness of electronic copies of this plan sheet.

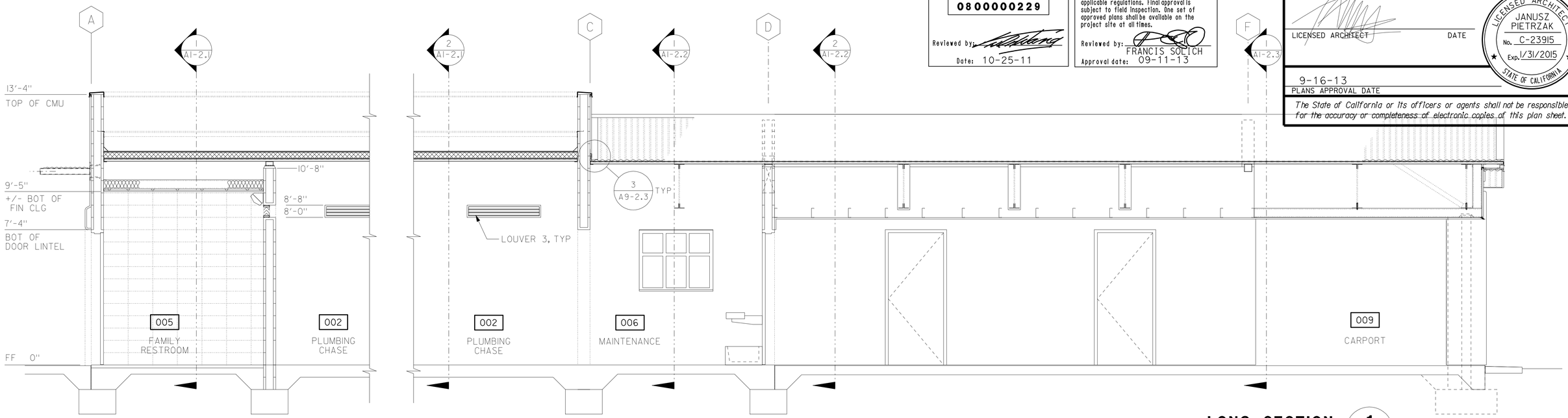

LONG SECTION 1
3/8"=1'-0"

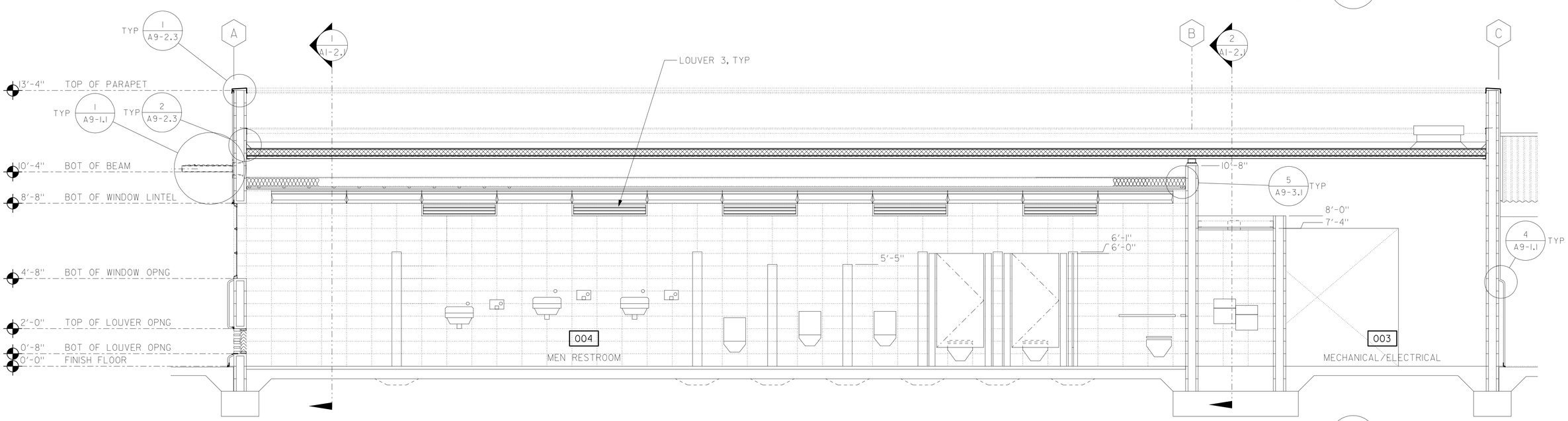

LONG SECTION 2
3/8"=1'-0"

DESIGN	BY JANUSZ PIETRZAK	CHECKED Donald E. Alsey	
DETAILS	BY C R ZERIO ROBERTINO QUIBIN	CHECKED Donald E. Alsey	
QUANTITIES	BY N/A	CHECKED N/A	

STATE OF CALIFORNIA
DEPARTMENT OF TRANSPORTATION

DIVISION OF ENGINEERING SERVICES
ARCHITECTURAL AND STRUCTURAL DESIGN

BRIDGE NO. 540004R/L
POST MILE 107.3

C.V. KANE SAFETY ROADSIDE REST AREA REHABILITATION

STRUCTURE I COMFORT STATION A

BUILDING SECTIONS

SHEET A1-2.5

a1-25.dgn
TAEMWW Imperial Rev. 7/10 18-SEP-2013 11:19

ORIGINAL SCALE IN INCHES FOR REDUCED PLANS 0 1 2 3

UNIT 3600
PROJECT NUMBER & PHASE 08000002291
EA 000000

DISREGARD PRINTS BEARING EARLIER REVISION DATES → - 07

REVISION DATES (PRELIMINARY STAGE ONLY) SHEET X OF X

18-SEP-2013 11:19
a1-25.dgn

DIST.	COUNTY	ROUTE	POST MILES TOTAL PROJECT	SHEET NO.	TOTAL SHEETS
03, 08	Sac, SBd	5, 15	23.3, R107.3	97	330

LICENSED ARCHITECT — DATE

LICENSED ARCHITECT JANUSZ PIETRZAK No. C-23915 Exp. 1/31/2015 STATE OF CALIFORNIA

9-16-13
PLANS APPROVAL DATE

The State of California or its officers or agents shall not be responsible for the accuracy or completeness of electronic copies of this plan sheet.

ACCESSIBILITY DESIGN APPROVAL STAMP DOT / DES / OTA
PROJECT ID **0800000229**
Reviewed by:
Date: 10-25-11

CALIFORNIA STATE FIRE MARSHAL APPROVED
Approval of this plan does not authorize or approve any omission or deviation from applicable regulations. Final approval is subject to field inspection. One set of approved plans shall be available on the project site at all times.
Reviewed by: FRANCIS SOLICH
Approval date: 09-11-13

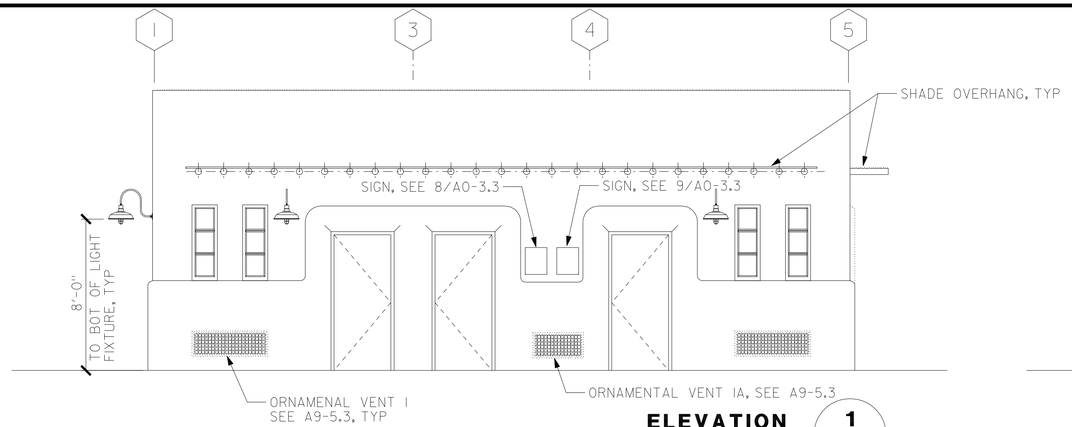

ELEVATION 1 — 1/4"=1'-0"

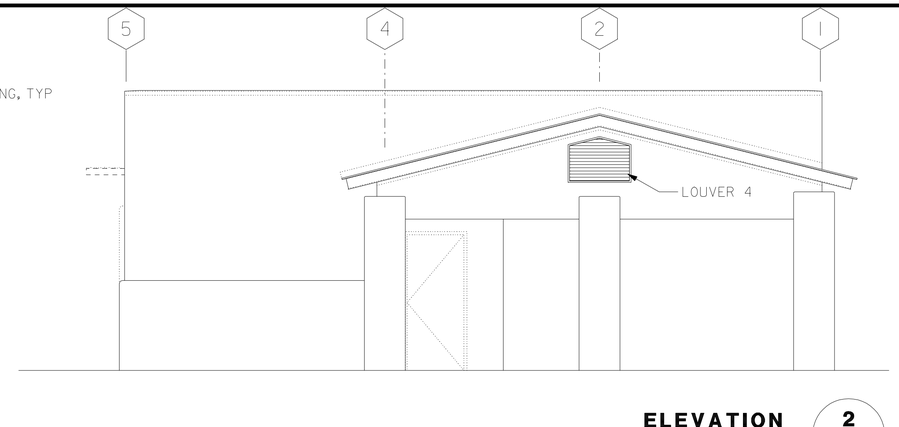

ELEVATION 2 — 1/4"=1'-0"

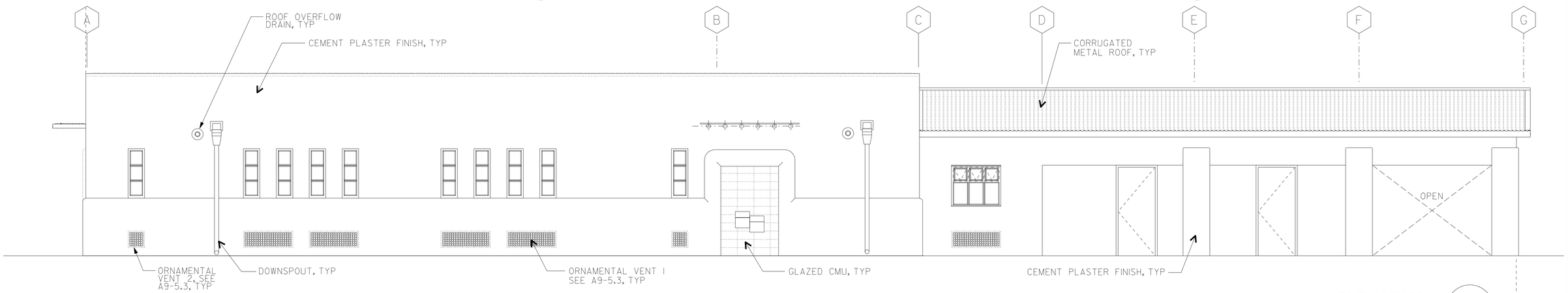

ELEVATION 3 — 1/4"=1'-0"

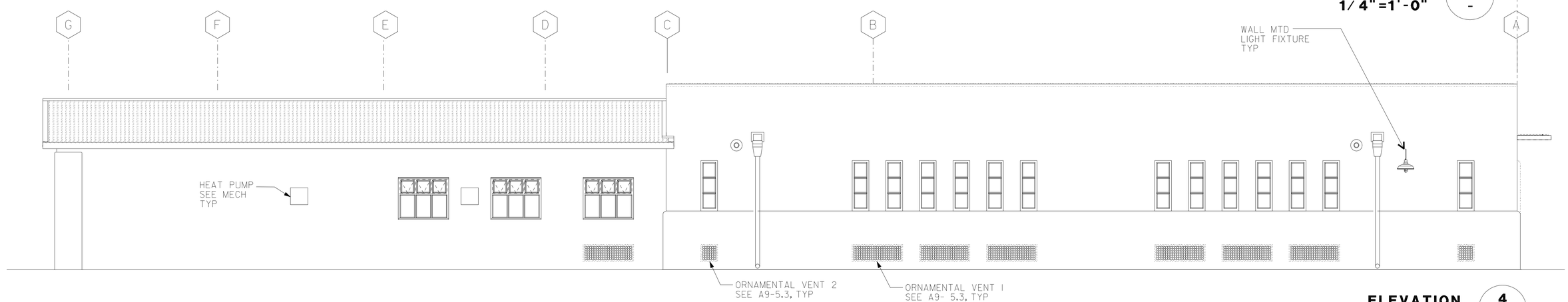

ELEVATION 4 — 1/4"=1'-0"

	BY	CHECKED
DESIGN	JANUSZ PIETRZAK	Donald E. Alsey
DETAILS	C R ZERIO, ROBERTINO QUIBIN	Donald E. Alsey
QUANTITIES	N/A	N/A

STATE OF CALIFORNIA
DEPARTMENT OF TRANSPORTATION

DIVISION OF ENGINEERING SERVICES
ARCHITECTURAL AND STRUCTURAL DESIGN

BRIDGE NO. 540004R/L
POST MILE 107.3

C.V. KANE SAFETY ROADSIDE REST AREA REHABILITATION
STRUCTURE I COMFORT STATION A
BUILDING ELEVATIONS

SHEET **A1-3.1**

a1-31.dgn
TAEMWW Imperial Rev. 7/10 18-SEP-2013 11:19

ORIGINAL SCALE IN INCHES FOR REDUCED PLANS 0 1 2 3

UNIT 3600
PROJECT NUMBER & PHASE 08000002291
EA 000000

DISREGARD PRINTS BEARING EARLIER REVISION DATES
REVISION DATES (PRELIMINARY STAGE ONLY) - 07
SHEET X OF X

18-SEP-2013 11:19
a1-31.dgn

DIST.	COUNTY	ROUTE	POST MILES TOTAL PROJECT	SHEET NO.	TOTAL SHEETS
03, 08	Sac, SBd	5, 15	23.3, R107.3	98	330

LICENSED ARCHITECT DATE

LICENSED ARCHITECT JANUSZ PIETRZAK No. C-23915 Exp. 1/31/2015 STATE OF CALIFORNIA

9-16-13
PLANS APPROVAL DATE

The State of California or its officers or agents shall not be responsible for the accuracy or completeness of electronic copies of this plan sheet.

ACCESSIBILITY DESIGN APPROVAL STAMP DOT / DES / OTA

PROJECT ID **0800000229**

Reviewed by:

Date: 10-25-11

CALIFORNIA STATE FIRE MARSHAL APPROVED

Approval of this plan does not authorize or approve any omission or deviation from applicable regulations. Final approval is subject to field inspection. One set of approved plans shall be available on the project site at all times.

Reviewed by: FRANCIS SOLICH

Approval date: 09-11-13

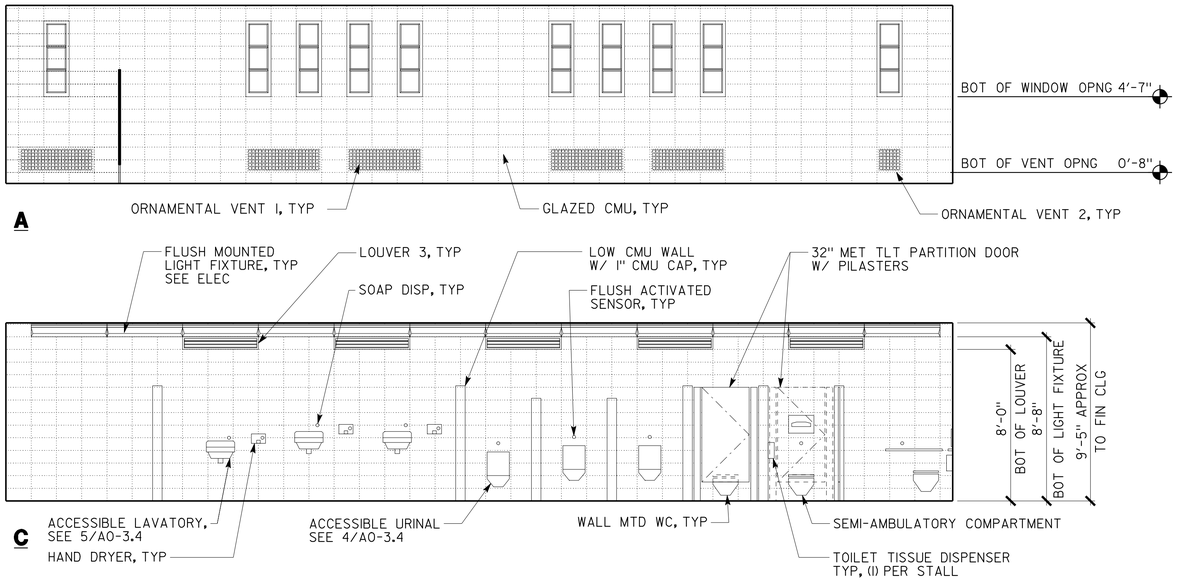

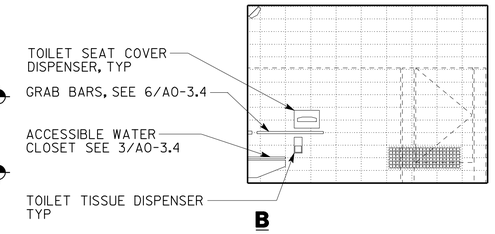

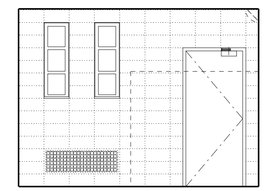

MEN RESTROOM 004

SCALE 1/4" = 1'-0"

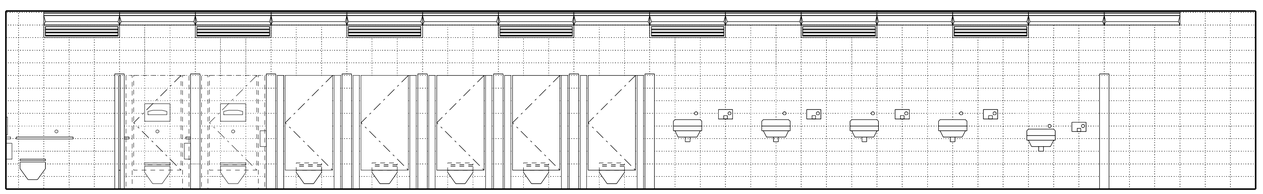

A FOR ANNOTATION AND DIMENSIONS SEE MEN RESTROOM ABOVE

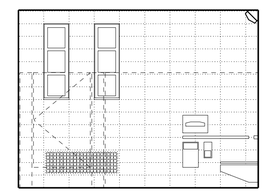

B FOR ANNOTATION AND DIMENSIONS SEE MEN RESTROOM ABOVE

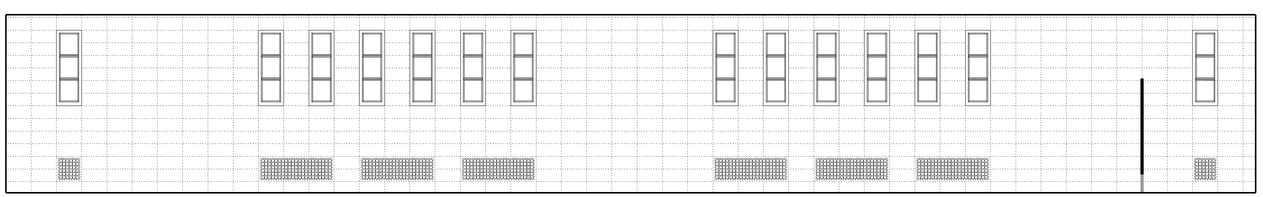

C FOR ANNOTATION AND DIMENSIONS SEE MEN RESTROOM ABOVE

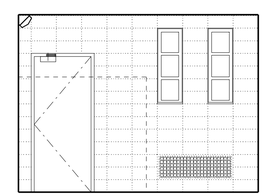

D FOR ANNOTATION AND DIMENSIONS SEE MEN RESTROOM ABOVE

WOMEN RESTROOM 001

SCALE 1/4" = 1'-0"

DESIGN	BY JANUSZ PIETRZAK	CHECKED Donald E. Alsey	
DETAILS	BY C R ZERIO ROBERTINO QUIBIN	CHECKED Donald E. Alsey	
QUANTITIES	BY N/A	CHECKED N/A	

STATE OF CALIFORNIA DEPARTMENT OF TRANSPORTATION

DIVISION OF ENGINEERING SERVICES ARCHITECTURAL AND STRUCTURAL DESIGN

BRIDGE NO. 540004R/L

POST MILE 107.3

STRUCTURE I COMFORT STATION A

C.V. KANE SAFETY ROADSIDE REST AREA REHABILITATION

INTERIOR ELEVATIONS

SHEET A1-4.1

a1-41.dgn

TAEMWW Imperial Rev. 7/10 18-SEP-2013 11:19

ORIGINAL SCALE IN INCHES FOR REDUCED PLANS 0 1 2 3

UNIT 3600

PROJECT NUMBER & PHASE 08000002291

EA 000000

DISREGARD PRINTS BEARING EARLIER REVISION DATES

REVISION DATES (PRELIMINARY STAGE ONLY) - 07

SHEET X OF X

a1-41.dgn

18-SEP-2013 11:19

DIST.	COUNTY	ROUTE	POST MILES TOTAL PROJECT	SHEET NO.	TOTAL SHEETS
03, 08	Sac, SBd	5, 15	23.3, R107.3	99	330

LICENSED ARCHITECT — DATE

LICENSED ARCHITECT JANUSZ PIETRZAK No. C-23915 Exp. 1/31/2015 STATE OF CALIFORNIA

9-16-13
PLANS APPROVAL DATE

The State of California or its officers or agents shall not be responsible for the accuracy or completeness of electronic copies of this plan sheet.

ACCESSIBILITY DESIGN APPROVAL STAMP DOT / DES / OTA
PROJECT ID **0800000229**
Reviewed by:
Date: 10-25-11

CALIFORNIA STATE FIRE MARSHAL APPROVED
Approval of this plan does not authorize or approve any omission or deviation from applicable regulations. Final approval is subject to field inspection. One set of approved plans shall be available on the project site at all times.
Reviewed by: FRANCIS SOLICH
Approval date: 09-11-13

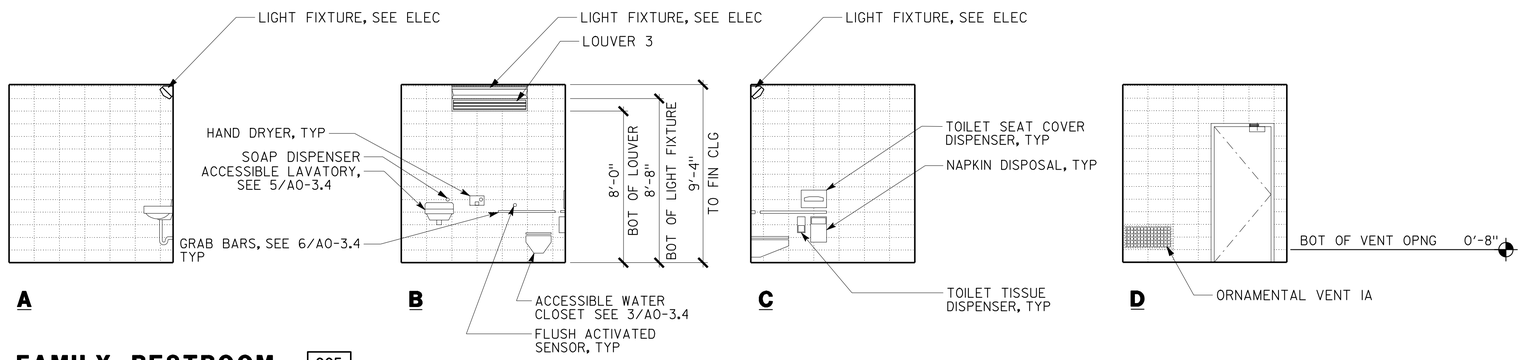

FAMILY RESTROOM 005

SCALE 1/4" = 1'-0"

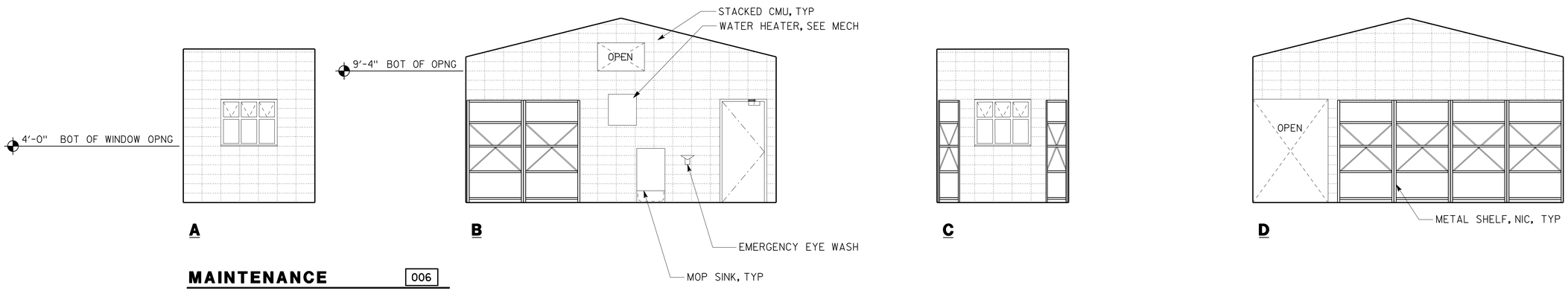

MAINTENANCE 006

SCALE 1/4" = 1'-0"

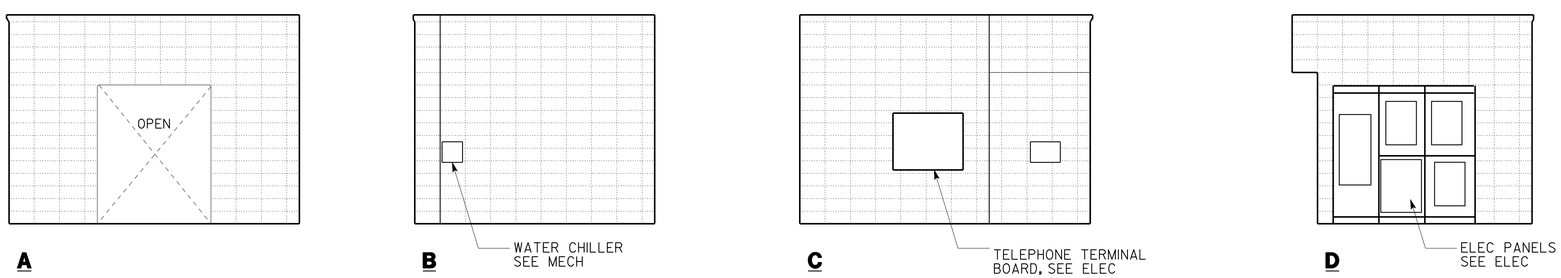

MECHANICAL/ELECTRICAL 003

SCALE 1/4" = 1'-0"

	BY	CHECKED
DESIGN	JANUSZ PIETRZAK	Donald E. Alsey
DETAILS	C R ZERIO ROBERTINO QUIBIN	Donald E. Alsey
QUANTITIES	N/A	N/A

STATE OF CALIFORNIA
DEPARTMENT OF TRANSPORTATION

DIVISION OF ENGINEERING SERVICES
ARCHITECTURAL AND STRUCTURAL DESIGN

BRIDGE NO. 540004R/L
POST MILE 107.3

C.V. KANE SAFETY ROADSIDE REST AREA REHABILITATION
STRUCTURE I COMFORT STATION A
INTERIOR ELEVATIONS

SHEET **A1-4.2**

a1-42.dgn
TAEMWW Imperial Rev. 7/10 18-SEP-2013 11:20

ORIGINAL SCALE IN INCHES FOR REDUCED PLANS 0 1 2 3

UNIT 3600
PROJECT NUMBER & PHASE 08000002291
EA 000000

DISREGARD PRINTS BEARING EARLIER REVISION DATES → - 07

REVISION DATES (PRELIMINARY STAGE ONLY) SHEET X OF X

18-SEP-2013 11:20
a1-42.dgn

DIST.	COUNTY	ROUTE	POST MILES TOTAL PROJECT	SHEET NO.	TOTAL SHEETS
03, 08	Sac, SBd	5, 15	23.3, R107.3	100	330

LICENSED ARCHITECT — DATE

LICENSED ARCHITECT JANUSZ PIETRZAK No. C-23915 Exp. 1/31/2015 STATE OF CALIFORNIA

9-16-13
PLANS APPROVAL DATE

The State of California or its officers or agents shall not be responsible for the accuracy or completeness of electronic copies of this plan sheet.

ACCESSIBILITY DESIGN APPROVAL STAMP DOT / DES / OTA
PROJECT ID 0800000229
Reviewed by:
Date: 10-25-11

CALIFORNIA STATE FIRE MARSHAL APPROVED
Approval of this plan does not authorize or approve any omission or deviation from applicable regulations. Final approval is subject to field inspection. One set of approved plans shall be available on the project site at all times.
Reviewed by: FRANCIS SOLICH
Approval date: 09-11-13

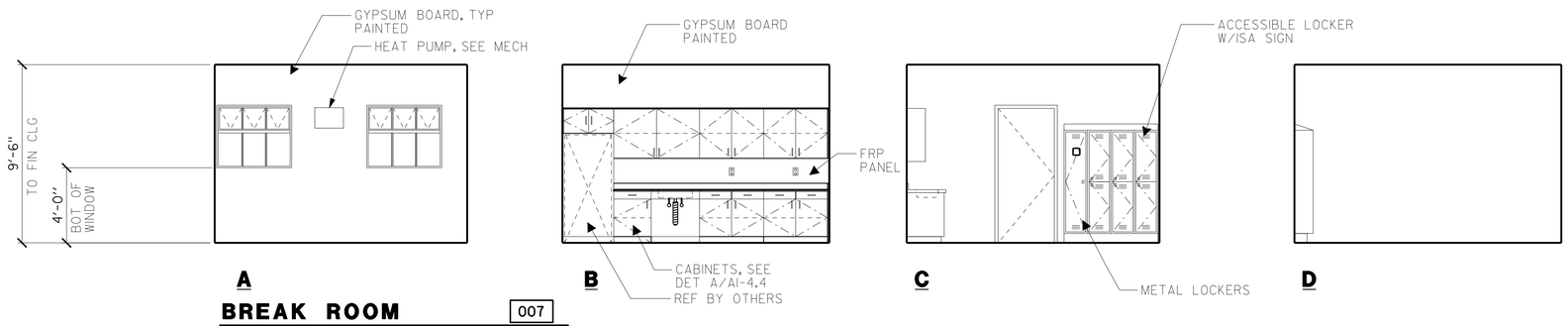

BREAK ROOM 007

SCALE 1/4" = 1'-0"

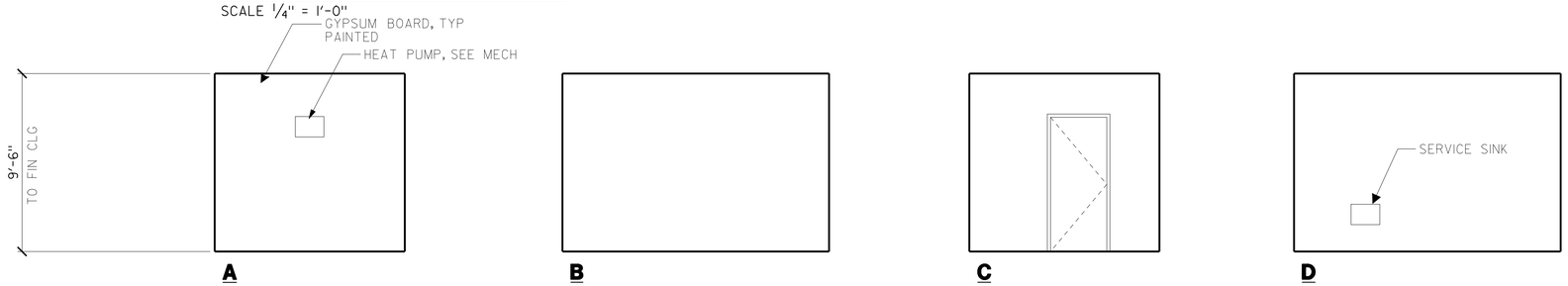

STORAGE 008

SCALE 1/4" = 1'-0"

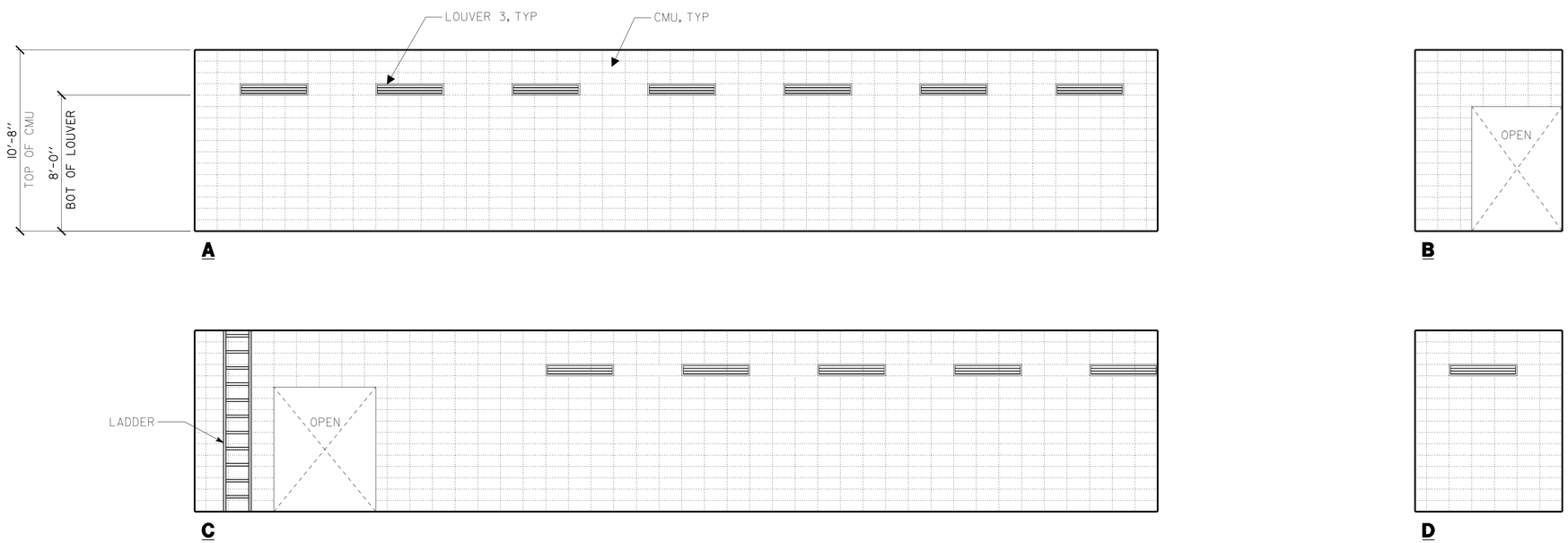

PLUMBING CHASE 002

SCALE 1/4" = 1'-0"

DESIGN	BY JANUSZ PIETRZAK	CHECKED Donald E. Alsey	
DETAILS	BY C R ZERIO ROBERTINO QUIBIN	CHECKED Donald E. Alsey	
QUANTITIES	BY N/A	CHECKED N/A	

STATE OF CALIFORNIA DEPARTMENT OF TRANSPORTATION

DIVISION OF ENGINEERING SERVICES ARCHITECTURAL AND STRUCTURAL DESIGN

BRIDGE NO. 540004R/L
POST MILE 107.3
STRUCTURE I COMFORT STATION A

C.V. KANE SAFETY ROADSIDE REST AREA REHABILITATION

INTERIOR ELEVATIONS

SHEET A1-4.3

a1-43.dgn
TAEMWW Imperial Rev. 7/10 18-SEP-2013 11:20

ORIGINAL SCALE IN INCHES FOR REDUCED PLANS 0 1 2 3

UNIT 3600
PROJECT NUMBER & PHASE 08000002291
EA 000000

DISREGARD PRINTS BEARING EARLIER REVISION DATES → - 07

REVISION DATES (PRELIMINARY STAGE ONLY) SHEET X OF X

18-SEP-2013 11:20
a1-43.dgn