Dist	COUNTY	ROUTE	POST MILES TOTAL PROJECT	SHEET No.	TOTAL SHEETS
08	SBd	38	15.0/49.5	1	50

ACSTP-P038(018)E

STATE OF CALIFORNIA
DEPARTMENT OF TRANSPORTATION

PROJECT PLANS FOR CONSTRUCTION ON
STATE HIGHWAY
IN SAN BERNARDINO COUNTY
NEAR ANGELUS OAKS
FROM VALLEY OF THE FALLS DRIVE
TO NORTH JUNCTION OF ROUTE 18 NEAR BIG BEAR LAKE

TO BE SUPPLEMENTED BY STANDARD PLANS DATED 2010

INDEX OF PLANS

SHEET No.	DESCRIPTION
1	TITLE AND LOCATION MAP
2	TYPICAL CROSS SECTIONS
3-11	CONSTRUCTION DETAILS
12	CONSTRUCTION AREA SIGNS
13	PAVEMENT DELINEATION QUANTITIES
14-20	SUMMARY OF QUANTITIES
21-23	ELECTRICAL PLANS
24-50	REVISED AND NEW STANDARD PLANS

THE STANDARD PLANS LIST APPLICABLE TO THIS CONTRACT IS INCLUDED IN THE NOTICE TO BIDDERS AND SPECIAL PROVISIONS BOOK.

LOCATION MAP

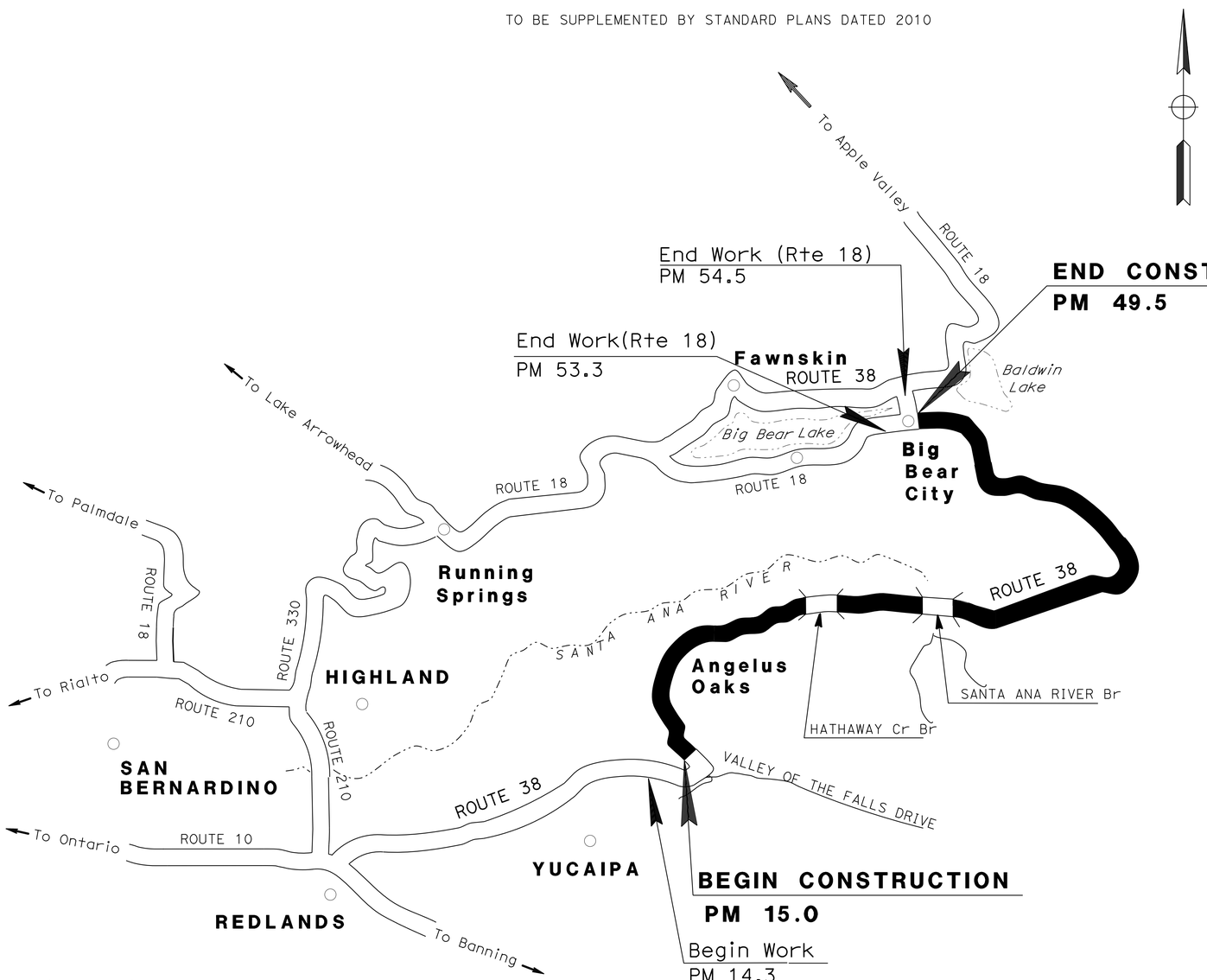

NO SCALE

THE CONTRACTOR SHALL POSSESS THE CLASS (OR CLASSES) OF LICENSE AS SPECIFIED IN THE "NOTICE TO BIDDERS."

PROJECT MANAGER RAFIH ACHY

DESIGN ENGINEER SERGIO AVILA

PROJECT ENGINEER REGISTERED CIVIL ENGINEER — DATE 12-2-13

December 16, 2013
PLANS APPROVAL DATE

REGISTERED PROFESSIONAL ENGINEER CRESENCIO GARCIA No. 63721 Exp. 9/30/14 CIVIL STATE OF CALIFORNIA

THE STATE OF CALIFORNIA OR ITS OFFICERS OR AGENTS SHALL NOT BE RESPONSIBLE FOR THE ACCURACY OR COMPLETENESS OF SCANNED COPIES OF THIS PLAN SHEET.

CONTRACT No.	08-0G6204
PROJECT ID	0800000218

LAST REVISION 12-02-13

DATE PLOTTED => 13-DEC-2013
TIME PLOTTED => 10:50

Dist	COUNTY	ROUTE	POST MILES TOTAL PROJECT	SHEET No.	TOTAL SHEETS
08	SBd	38	15.0/49.5	2	50

REGISTERED CIVIL ENGINEER 12-2-13 DATE

12-16-13 PLANS APPROVAL DATE

REGISTERED PROFESSIONAL ENGINEER CRESENCIO GARCIA No. 63721 Exp. 9/30/14 CIVIL STATE OF CALIFORNIA

THE STATE OF CALIFORNIA OR ITS OFFICERS OR AGENTS SHALL NOT BE RESPONSIBLE FOR THE ACCURACY OR COMPLETENESS OF SCANNED COPIES OF THIS PLAN SHEET.

NOTES:

1. DIMENSIONS OF STRUCTURAL SECTIONS ARE SUBJECT TO TOLERANCES SPECIFIED IN THE STANDARD SPECIFICATIONS.
2. SUPERELEVATION AS SHOWN OR AS DIRECTED BY THE ENGINEER.
3. THE EXACT PAVING LIMITS WILL BE DETERMINED BY THE ENGINEER.
4. LOCATIONS FOR DIGOUTS AND GUARDRAIL INSTALLATION ARE SHOWN ON QUANTITY SHEETS.
5. FOR LOCATION OF SAFETY EDGE, SEE SUMMARY OF QUANTITIES SHEET.

DESIGN DESIGNATION FOR PM 15.0/48.16

2013 AADT = 4200, DHV = 700, T(ADT) = 12%, T(DHV) = 6%
2018 AADT = 4700, DHV = 750, T(ADT) = 11%, T(DHV) = 6%
2023 AADT = 5200, DHV = 930, T(ADT) = 11%, T(DHV) = 6%
V=60 MPH

TRAFFIC INDEX	LANES + FIRST 2 FT OF OUTSIDE SHOULDER	OUTSIDE SHOULDER
10 YEAR	8.5	5.5
10 YEAR(ESAL)	619,300	12,386

DESIGN DESIGNATION FOR PM 48.16/49.52

2013 AADT = 14600, DHV = 1530, T(ADT) = 17%, T(DHV) = 7%
2018 AADT = 15000, DHV = 1560, T(ADT) = 16%, T(DHV) = 7%
2023 AADT = 15400, DHV = 1590, T(ADT) = 15%, T(DHV) = 7%

TRAFFIC INDEX	LANES + FIRST 2 FT OF OUTSIDE SHOULDER	OUTSIDE SHOULDER
10 YEAR	10.0	6.0
10 YEAR(ESAL)	2,081,044	41,621

ABBREVIATIONS:

AADT ANNUAL AVERAGE DAILY TRAFFIC
DHV DESIGN HOUR VOLUME
T TRUCK % IN DHV
ESAL EQUIVALENT SINGLE AXLE LOAD
HMA-C HOT MIX ASPHALT (TYPE C)
HMA-A HOT MIX ASPHALT (TYPE A)

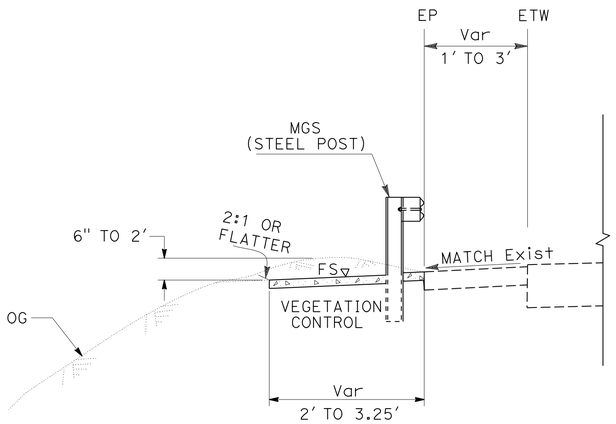

GUARD RAILING
VARIOUS LOCATIONS

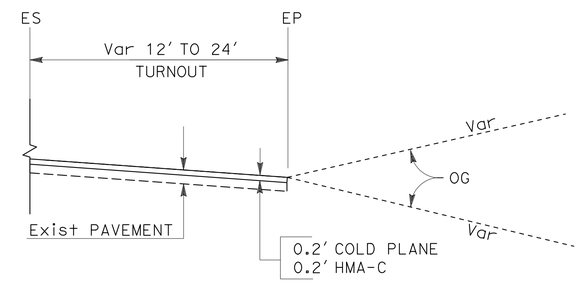

TURNOUT

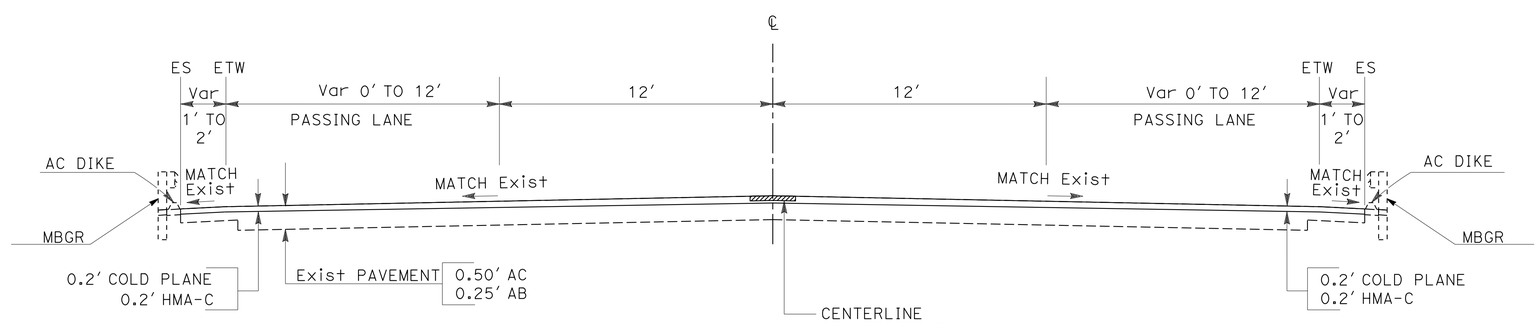

WESTBOUND

(WB)
PM 38.4-38.5

(WB)
PM 15.0-49.5

(EB)
PM 15.0-49.5

EASTBOUND

(EB)
PM 32.9-33.4
PM 36.1-36.4
PM 38.4-38.5
PM 39.2-39.4
PM 47.1-47.2
PM 48.3-48.4
PM 48.7-49.2

ROUTE 38

TYPICAL CROSS SECTIONS

NO SCALE

X-1

STATE OF CALIFORNIA - DEPARTMENT OF TRANSPORTATION
Caltrans
DESGIN
FUNCTIONAL SUPERVISOR: SERGIO E. AVILA
CALCULATED-DESIGNED BY: EVA MARISCAL
CHECKED BY: CRESENCIO GARCIA
REVISED BY
DATE REVISED

LAST REVISION 12-02-13
DATE PLOTTED => 13-DEC-2013
TIME PLOTTED => 10:50

Dist	COUNTY	ROUTE	POST MILES TOTAL PROJECT	SHEET No.	TOTAL SHEETS
08	SBd	38	15.0/49.5	3	50

12-2-13
REGISTERED CIVIL ENGINEER DATE

12-16-13
PLANS APPROVAL DATE

REGISTERED PROFESSIONAL ENGINEER CRESENCIO GARCIA No. 63721 Exp. 9/30/14 CIVIL STATE OF CALIFORNIA

THE STATE OF CALIFORNIA OR ITS OFFICERS OR AGENTS SHALL NOT BE RESPONSIBLE FOR THE ACCURACY OR COMPLETENESS OF SCANNED COPIES OF THIS PLAN SHEET.

LEGEND:

COLD PLANE AC AND PLACE HMA (TYPE C)

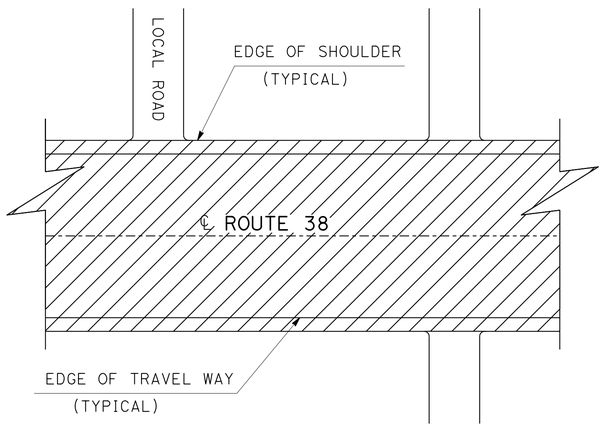

LIMITS OF WORK

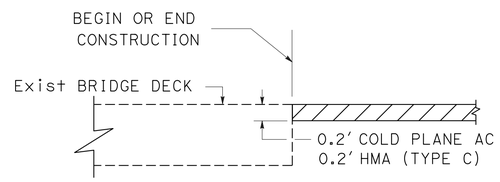

PAVING CONFORM
AT BEGINNING OR END OF CONSTRUCTION
AND AT BRIDGE LOCATION
DETAIL "A"

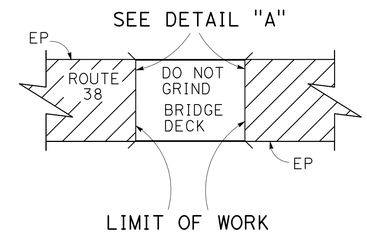

BRIDGE DECK
WITHIN PROJECT LIMITS

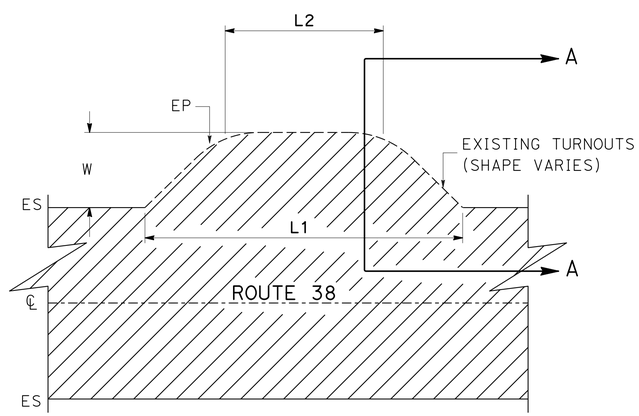

TURNOUT PLAN
SEE Q-SHEET FOR LOCATIONS AND DIMENSIONS

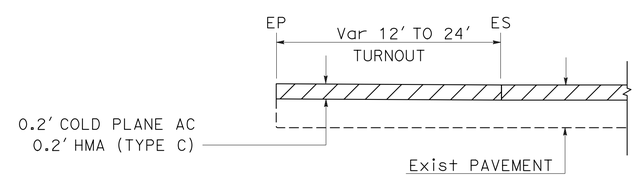

TURNOUT DETAIL (SECTION A-A)

CONSTRUCTION DETAILS

NO SCALE

C-1

STATE OF CALIFORNIA - DEPARTMENT OF TRANSPORTATION
Caltrans
DESGIN
FUNCTIONAL SUPERVISOR: SERGIO E. AVILA
CALCULATED-DESIGNED BY: EVA MARISCAL
CHECKED BY: CRESENCIO GARCIA
REVISED BY
DATE REVISED

LAST REVISION 12-02-13
DATE PLOTTED => 13-DEC-2013
TIME PLOTTED => 10:50

Dist	COUNTY	ROUTE	POST MILES TOTAL PROJECT	SHEET No.	TOTAL SHEETS
08	SBd	38	15.0/49.5	4	50

12-2-13
REGISTERED CIVIL ENGINEER DATE

12-16-13
PLANS APPROVAL DATE

REGISTERED PROFESSIONAL ENGINEER
CRESENCIO GARCIA
No. 63721
Exp. 9/30/14
CIVIL
STATE OF CALIFORNIA

THE STATE OF CALIFORNIA OR ITS OFFICERS OR AGENTS SHALL NOT BE RESPONSIBLE FOR THE ACCURACY OR COMPLETENESS OF SCANNED COPIES OF THIS PLAN SHEET.

LEGEND:

0.2′ COLD PLANE AC AND 0.2′ HMA (TYPE C)

REPLACE ASPHALT CONCRETE SURFACING 0.5′ Max (HMA-A)

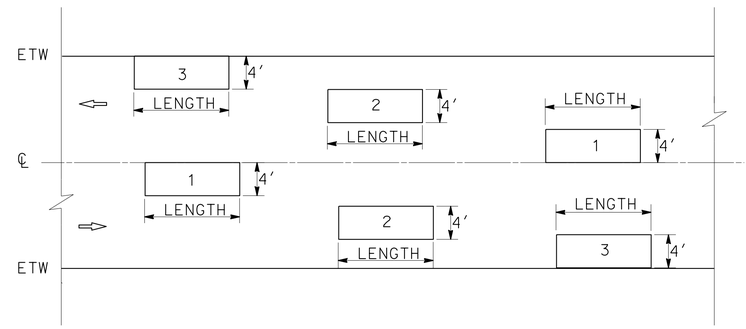

REPLACE ASPHALT CONCRETE SURFACING (DIGOUTS LAYOUT)

CASE 1: LEFT WHEEL TRACK (L)
CASE 2: CENTER WHEEL TRACK (R)
CASE 3: RIGHT OF TRAVEL WAY (C)
EXACT DIGOUT LOCATIONS SHALL BE DETERMINED BY THE ENGINEER

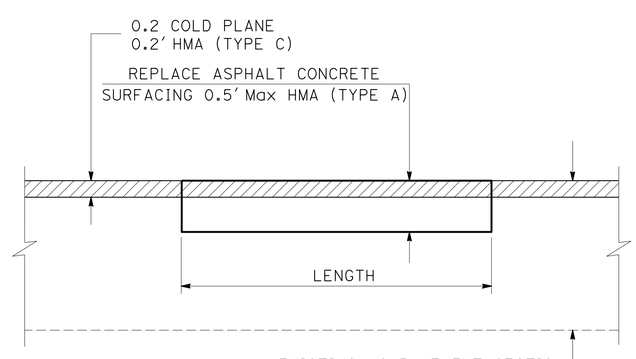

REPLACE ASPHALT CONCRETE SURFACING (PROFILE)

FOR LOCATIONS AND DIMENSIONS
TO REPLACE ASPHALT CONCRETE SURFACING
SEE SUMMARY OF QUANTITY SHEETS

CONSTRUCTION DETAILS

NO SCALE

C-2

STATE OF CALIFORNIA - DEPARTMENT OF TRANSPORTATION
Caltrans
DESGIN
FUNCTIONAL SUPERVISOR: SERGIO E. AVILA
CALCULATED-DESIGNED BY: DANH NGUYEN
CHECKED BY: CRESENCIO GARCIA
REVISED BY
DATE REVISED

LAST REVISION 12-02-13
DATE PLOTTED => 13-DEC-2013
TIME PLOTTED => 10:50

Dist	COUNTY	ROUTE	POST MILES TOTAL PROJECT	SHEET No.	TOTAL SHEETS
08	SBd	38	15.0/49.5	5	50

12-2-13
REGISTERED CIVIL ENGINEER DATE

12-16-13
PLANS APPROVAL DATE

REGISTERED PROFESSIONAL ENGINEER
CRESENCIO GARCIA
No. 63721
Exp. 9/30/14
CIVIL
STATE OF CALIFORNIA

THE STATE OF CALIFORNIA OR ITS OFFICERS OR AGENTS SHALL NOT BE RESPONSIBLE FOR THE ACCURACY OR COMPLETENESS OF SCANNED COPIES OF THIS PLAN SHEET.

NOTE:

1. RUMBLE STRIP SHALL BE CONSTRUCTED CONTINUOUSLY ALONG THE LIMITS OF THIS PROJECT, EXCEPT WHERE SPECIFIED IN THE SPECIAL PROVISIONS.

LEGEND:

DIRECTION OF TRAVEL

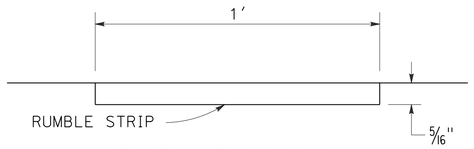

SECTION B-B

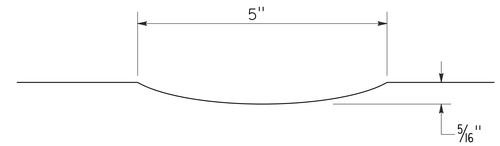

SECTION A-A

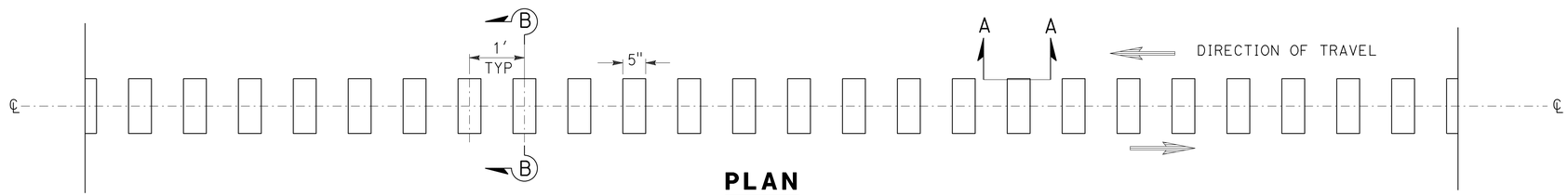

PLAN

TYPICAL GROUND-IN CENTERLINE RUMBLE STRIP

STRIPING NOT SHOWN

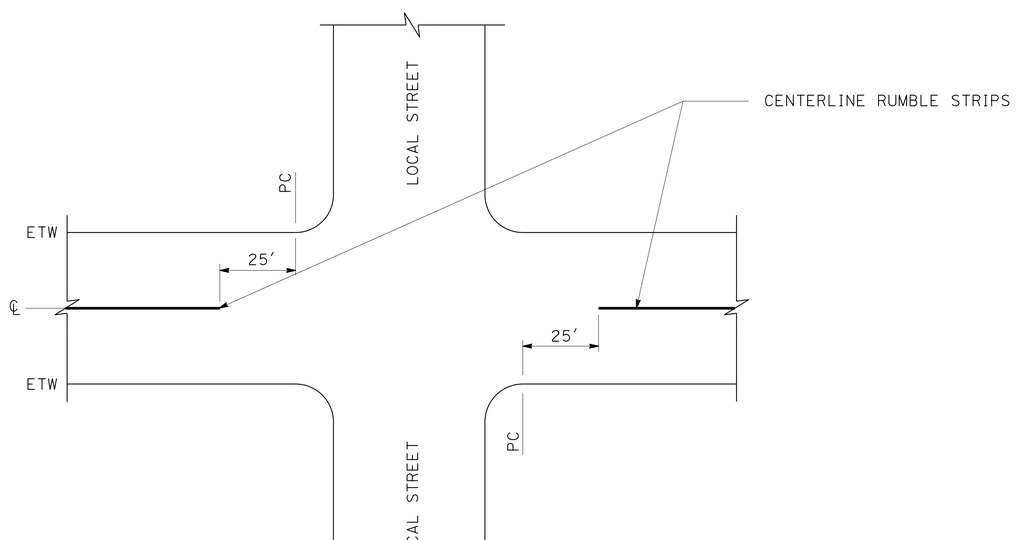

LIMITS OF TYPICAL GROUND-IN CENTERLINE RUMBLE STRIPS AT INTERSECTION

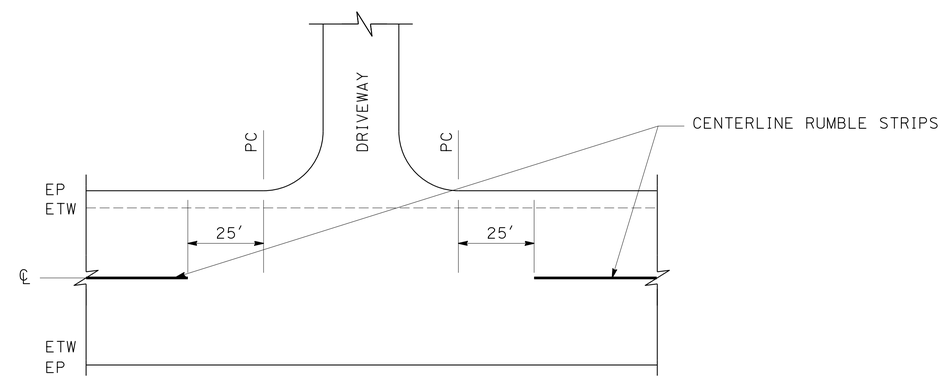

LIMITS OF TYPICAL GROUND-IN CENTERLINE RUMBLE STRIPS AT DRIVEWAY

CONSTRUCTION DETAILS

NO SCALE

C-3

STATE OF CALIFORNIA - DEPARTMENT OF TRANSPORTATION
Caltrans
DESGIN
FUNCTIONAL SUPERVISOR: SERGIO E. AVILA
CALCULATED-DESIGNED BY: EVA MARISCAL
CHECKED BY: CRESENCIO GARCIA
REVISED BY
DATE REVISED

LAST REVISION 12-02-13
DATE PLOTTED => 13-DEC-2013
TIME PLOTTED => 10:51

Dist	COUNTY	ROUTE	POST MILES TOTAL PROJECT	SHEET No.	TOTAL SHEETS
08	SBd	38	15.0/49.5	6	50

12-2-13
REGISTERED CIVIL ENGINEER DATE

12-16-13
PLANS APPROVAL DATE

REGISTERED PROFESSIONAL ENGINEER
CRESENCIO GARCIA
No. 63721
Exp. 9/30/14
CIVIL
STATE OF CALIFORNIA

THE STATE OF CALIFORNIA OR ITS OFFICERS OR AGENTS SHALL NOT BE RESPONSIBLE FOR THE ACCURACY OR COMPLETENESS OF SCANNED COPIES OF THIS PLAN SHEET.

LOCATIONS OF EXISTING SURVEY MONUMENTS

No.	LOCATION PM	No. OF SURVEY MONUMENTS EA (N)	DESCRIPTION
1	15.0	1	Std DISK, IN WELL, STAMPED "℄ IMP 121+45.00 BC" (= 596+30.08 BC)
2	15.1	1	Std DISK, IN WELL, AT ℄ IMP Hwy 38
3	15.3	1	GIN SPIKE, WITH CALTRANS TAG, STAMPED "GPS 15.30"
4	19.2	1	GIN SPIKE, WITH CALTRANS TAG, STAMPED "GPS 19.17"
5	19.3	1	GIN SPIKE, WITH CALTRANS TAG, STAMPED "GPS 19.27"
6	26.5	1	GIN SPIKE, WITH CALTRANS TAG, STAMPED "GPS 26.50"
7	26.6	1	1" IP, WITH ALUMINIUM CAP STAMPED "GPS 26.60"
8	30.7	1	Std DISK, IN WELL, AT ℄ IMP Hwy 38
9	30.7	1	Std DISK, IN WELL, AT ℄ IMP Hwy 38
10	30.75	1	Std DISK, IN WELL, AT ℄ IMP Hwy 38
11	30.8	1	Std DISK, IN WELL, AT ℄ IMP Hwy 38
12	30.9	1	Std DISK, IN WELL, AT ℄ IMP Hwy 38
13	30.9	1	Std DISK, IN WELL, AT ℄ IMP Hwy 38
14	30.9	1	Std DISK, IN WELL, AT ℄ IMP Hwy 38
15	30.9	1	Std DISK, IN WELL, AT ℄ IMP Hwy 38
16	31.0	1	Std DISK, IN WELL, AT ℄ IMP Hwy 38
17	31.1	1	Std DISK, IN WELL, AT ℄ IMP Hwy 38
18	31.3	1	Std DISK, IN WELL, AT ℄ IMP Hwy 38
19	31.3	1	Std DISK, IN WELL, AT ℄ IMP Hwy 38
20	31.3	1	Std DISK, IN WELL, AT ℄ IMP Hwy 38
21	31.4	1	Std DISK, IN WELL, AT ℄ IMP Hwy 38
22	31.6	1	Std DISK, IN WELL, AT ℄ IMP Hwy 38
23	31.7	1	Std DISK, IN WELL, AT ℄ IMP Hwy 38
24	31.7	1	Std DISK, IN WELL, AT ℄ IMP Hwy 38
25	32.0	1	GIN SPIKE WITH CALTRANS WASHER, STAMPED "GPS 31.95"
26	32.0	1	Std DISK, IN WELL, AT ℄ IMP Hwy 38
27	32.1	1	Std DISK, IN WELL, AT ℄ IMP Hwy 38
28	32.2	1	Std DISK, IN WELL, AT ℄ IMP Hwy 38
29	32.2	1	Std DISK, IN WELL, AT ℄ IMP Hwy 38
30	32.4	1	Std DISK, IN WELL, AT ℄ IMP Hwy 38
31	32.5	1	Std DISK, IN WELL, AT ℄ IMP Hwy 38
32	32.5	1	Std DISK, IN WELL, AT ℄ IMP Hwy 38
33	32.6	1	Std DISK, IN WELL, AT ℄ IMP Hwy 38
34	32.6	1	Std DISK, IN WELL, AT ℄ IMP Hwy 38
35	32.8	1	Std DISK, IN WELL, AT ℄ IMP Hwy 38
36	32.8	1	Std DISK, IN WELL, AT ℄ IMP Hwy 38
37	32.9	1	Std DISK, IN WELL, AT ℄ IMP Hwy 38
38	32.9	1	Std DISK, IN WELL, AT ℄ IMP Hwy 38
39	33.0	1	Std DISK, IN WELL, AT ℄ IMP Hwy 38
40	33.0	1	Std DISK, IN WELL, AT ℄ IMP Hwy 38

(N) NOT A SEPARATE PAY ITEM, FOR INFORMATION ONLY.

CONSTRUCTION DETAILS

NO SCALE

C-4

STATE OF CALIFORNIA - DEPARTMENT OF TRANSPORTATION
Caltrans
DESGIN

FUNCTIONAL SUPERVISOR: SERGIO E. AVILA
CALCULATED-DESIGNED BY: EVA MARISCAL
CHECKED BY: CRESENCIO GARCIA
REVISED BY
DATE REVISED

LAST REVISION 12-02-13
DATE PLOTTED => 13-DEC-2013
TIME PLOTTED => 10:51

Dist	COUNTY	ROUTE	POST MILES TOTAL PROJECT	SHEET No.	TOTAL SHEETS
08	SBd	38	15.0/49.5	7	50

12-2-13
REGISTERED CIVIL ENGINEER DATE

12-16-13
PLANS APPROVAL DATE

REGISTERED PROFESSIONAL ENGINEER CRESENCIO GARCIA No. 63721 Exp 9/30/14 CIVIL STATE OF CALIFORNIA

THE STATE OF CALIFORNIA OR ITS OFFICERS OR AGENTS SHALL NOT BE RESPONSIBLE FOR THE ACCURACY OR COMPLETENESS OF SCANNED COPIES OF THIS PLAN SHEET.

LEGEND:

(N) NOT A SEPARATE PAY ITEM, FOR INFORMATION ONLY.

LOCATIONS OF EXISTING SURVEY MONUMENTS

No.	LOCATION PM	No. OF SURVEY MONUMENTS EA (N)	DESCRIPTION
41	33.4	1	Std DISK, IN WELL, AT ℄ IMP Hwy 38
42	33.4	1	Std DISK, IN WELL, AT ℄ IMP Hwy 38
43	33.6	1	Std DISK, IN WELL, AT ℄ IMP Hwy 38
44	33.7	1	Std DISK, IN WELL, AT ℄ IMP Hwy 38
45	33.8	1	Std DISK, IN WELL, AT ℄ IMP Hwy 38
46	33.8	1	Std DISK, IN WELL, AT ℄ IMP Hwy 38
47	33.8	1	Std DISK, IN WELL, AT ℄ IMP Hwy 38
48	33.9	1	Std DISK, IN WELL, AT ℄ IMP Hwy 38
49	34.0	1	Std DISK, IN WELL, AT ℄ IMP Hwy 38
50	34.0	1	Std DISK, IN WELL, AT ℄ IMP Hwy 38
51	34.0	1	Std DISK, IN WELL, AT ℄ IMP Hwy 38
52	34.2	1	Std DISK, IN WELL, AT ℄ IMP Hwy 38
53	34.2	1	Std DISK, IN WELL, AT ℄ IMP Hwy 38
54	34.3	1	Std DISK, IN WELL, AT ℄ IMP Hwy 38
55	34.4	1	Std DISK, IN WELL, AT ℄ IMP Hwy 38
56	34.4	1	Std DISK, IN WELL, AT ℄ IMP Hwy 38
57	34.5	1	Std DISK, IN WELL, AT ℄ IMP Hwy 38
58	34.5	1	Std DISK, IN WELL, AT ℄ IMP Hwy 38
59	34.6	1	Std DISK, IN WELL, AT ℄ IMP Hwy 38
60	34.6	1	Std DISK, IN WELL, AT ℄ IMP Hwy 38
61	34.7	1	Std DISK, IN WELL, AT ℄ IMP Hwy 38
62	34.7	1	Std DISK, IN WELL, AT ℄ IMP Hwy 38
63	34.7	1	Std DISK, IN WELL, AT ℄ IMP Hwy 38
64	34.8	1	Std DISK, IN WELL, AT ℄ IMP Hwy 38
65	34.9	1	Std DISK, IN WELL, AT ℄ IMP Hwy 38
66	35.0	1	Std DISK, IN WELL, AT ℄ IMP Hwy 38
67	35.0	1	Std DISK, IN WELL, AT ℄ IMP Hwy 38
68	35.1	1	Std DISK, IN WELL, AT ℄ IMP Hwy 38
69	35.1	1	Std DISK, IN WELL, AT ℄ IMP Hwy 38
70	35.1	1	Std DISK, IN WELL, AT ℄ IMP Hwy 38
71	35.1	1	GIN SPIKE WITH CALTRANS WASHER, STAMPED "GPS 35.10"
72	35.2	1	Std DISK, IN WELL, AT ℄ IMP Hwy 38
73	35.2	1	Std DISK, IN WELL, AT ℄ IMP Hwy 38
74	35.4	1	Std DISK, IN WELL, AT ℄ IMP Hwy 38
75	35.4	1	Std DISK, IN WELL, AT ℄ IMP Hwy 38
76	35.5	1	Std DISK, IN WELL, AT ℄ IMP Hwy 38
77	35.5	1	Std DISK, IN WELL, AT ℄ IMP Hwy 38
78	35.5	1	Std DISK, IN WELL, AT ℄ IMP Hwy 38
79	35.6	1	Std DISK, IN WELL, AT ℄ IMP Hwy 38
80	35.7	1	Std DISK, IN WELL, AT ℄ IMP Hwy 38
81	35.7	1	Std DISK, IN WELL, AT ℄ IMP Hwy 38
82	35.8	1	Std DISK, IN WELL, AT ℄ IMP Hwy 38
83	35.8	1	Std DISK, IN WELL, AT ℄ IMP Hwy 38
84	35.9	1	Std DISK, IN WELL, AT ℄ IMP Hwy 38
85	35.9	1	Std DISK, IN WELL, AT ℄ IMP Hwy 38
86	36.0	1	Std DISK, IN WELL, AT ℄ IMP Hwy 38
87	36.1	1	Std DISK, IN WELL, AT ℄ IMP Hwy 38
88	36.1	1	Std DISK, IN WELL, AT ℄ IMP Hwy 38
89	36.2	1	Std DISK, IN WELL, AT ℄ IMP Hwy 38
90	36.3	1	Std DISK, IN WELL, AT ℄ IMP Hwy 38
91	36.3	1	Std DISK, IN WELL, AT ℄ IMP Hwy 38
92	36.3	1	Std DISK, IN WELL, AT ℄ IMP Hwy 38
93	36.4	1	Std DISK, IN WELL, AT ℄ IMP Hwy 38
94	36.4	1	Std DISK, IN WELL, AT ℄ IMP Hwy 38
95	36.5	1	Std DISK, IN WELL, AT ℄ IMP Hwy 38
96	36.5	1	Std DISK, IN WELL, AT ℄ IMP Hwy 38
97	36.6	1	Std DISK, IN WELL, AT ℄ IMP Hwy 38
98	36.6	1	Std DISK, IN WELL, AT ℄ IMP Hwy 38
99	36.7	1	Std DISK, IN WELL, AT ℄ IMP Hwy 38
100	36.7	1	Std DISK, IN WELL, AT ℄ IMP Hwy 38

LOCATIONS OF EXISTING SURVEY MONUMENTS

No.	LOCATION PM	No. OF SURVEY MONUMENTS EA (N)	DESCRIPTION
101	36.7	1	Std DISK, IN WELL, AT ℄ IMP Hwy 38
102	36.8	1	Std DISK, IN WELL, AT ℄ IMP Hwy 38
103	36.8	1	Std DISK, IN WELL, AT ℄ IMP Hwy 38
104	36.8	1	Std DISK, IN WELL, AT ℄ IMP Hwy 38
105	36.8	1	Std DISK, IN WELL, AT ℄ IMP Hwy 38
106	36.9	1	Std DISK, IN WELL, AT ℄ IMP Hwy 38
107	36.9	1	Std DISK, IN WELL, AT ℄ IMP Hwy 38
108	37.1	1	Std DISK, IN WELL, AT ℄ IMP Hwy 38
109	37.1	1	Std DISK, IN WELL, AT ℄ IMP Hwy 38
110	37.2	1	Std DISK, IN WELL, AT ℄ IMP Hwy 38
111	37.2	1	Std DISK, IN WELL, AT ℄ IMP Hwy 38
112	37.3	1	Std DISK, IN WELL, AT ℄ IMP Hwy 38
113	37.3	1	Std DISK, IN WELL, AT ℄ IMP Hwy 38
114	37.3	1	Std DISK, IN WELL, AT ℄ IMP Hwy 38
115	37.3	1	Std DISK, IN WELL, AT ℄ IMP Hwy 38
116	37.4	1	Std DISK, IN WELL, AT ℄ IMP Hwy 38
117	37.4	1	Std DISK, IN WELL, AT ℄ IMP Hwy 38
118	37.4	1	Std DISK, IN WELL, AT ℄ IMP Hwy 38
119	37.5	1	Std DISK, IN WELL, AT ℄ IMP Hwy 38
120	37.6	1	Std DISK, IN WELL, AT ℄ IMP Hwy 38
121	37.6	1	Std DISK, IN WELL, AT ℄ IMP Hwy 38
122	37.7	1	Std DISK, IN WELL, AT ℄ IMP Hwy 38
123	37.7	1	Std DISK, IN WELL, AT ℄ IMP Hwy 38
124	37.7	1	Std DISK, IN WELL, AT ℄ IMP Hwy 38
125	37.8	1	Std DISK, IN WELL, AT ℄ IMP Hwy 38
126	37.8	1	Std DISK, IN WELL, AT ℄ IMP Hwy 38
127	37.8	1	Std DISK, IN WELL, AT ℄ IMP Hwy 38
128	37.9	1	Std DISK, IN WELL, AT ℄ IMP Hwy 38
129	37.9	1	Std DISK, IN WELL, AT ℄ IMP Hwy 38
130	38.0	1	Std DISK, IN WELL, AT ℄ IMP Hwy 38
131	38.0	1	Std DISK, IN WELL, AT ℄ IMP Hwy 38
132	38.0	1	Std DISK, IN WELL, AT ℄ IMP Hwy 38
133	38.1	1	Std DISK, IN WELL, AT ℄ IMP Hwy 38
134	38.2	1	Std DISK, IN WELL, AT ℄ IMP Hwy 38
135	38.2	1	Std DISK, IN WELL, AT ℄ IMP Hwy 38
136	38.2	1	Std DISK, IN WELL, AT ℄ IMP Hwy 38
137	38.3	1	Std DISK, IN WELL, AT ℄ IMP Hwy 38
138	38.3	1	Std DISK, IN WELL, AT ℄ IMP Hwy 38
139	38.3	1	GIN SPIKE WITH CALTRANS WASHER, STAMPED "GPS 38.30"
140	38.4	1	Std DISK, IN WELL, AT ℄ IMP Hwy 38
141	38.4	1	Std DISK, IN WELL, AT ℄ IMP Hwy 38
142	38.5	1	Std DISK, IN WELL, AT ℄ IMP Hwy 38
143	38.5	1	Std DISK, IN WELL, AT ℄ IMP Hwy 38
144	38.5	1	Std DISK, IN WELL, AT ℄ IMP Hwy 38
145	38.6	1	Std DISK, IN WELL, AT ℄ IMP Hwy 38
146	38.6	1	Std DISK, IN WELL, AT ℄ IMP Hwy 38
147	38.7	1	Std DISK, IN WELL, AT ℄ IMP Hwy 38
148	38.7	1	Std DISK, IN WELL, AT ℄ IMP Hwy 38
149	38.8	1	Std DISK, IN WELL, AT ℄ IMP Hwy 38
150	38.8	1	Std DISK, IN WELL, AT ℄ IMP Hwy 38

CONSTRUCTION DETAILS

C-5

STATE OF CALIFORNIA - DEPARTMENT OF TRANSPORTATION
Caltrans®
DESGIN
FUNCTIONAL SUPERVISOR: SERGIO E. AVILA
CALCULATED-DESIGNED BY: EVA MARISCAL
CHECKED BY: CRESENCIO GARCIA
REVISED BY
DATE REVISED

LAST REVISION 12-02-13
DATE PLOTTED => 13-DEC-2013
TIME PLOTTED => 10:51

Dist	COUNTY	ROUTE	POST MILES TOTAL PROJECT	SHEET No.	TOTAL SHEETS
08	SBd	38	15.0/49.5	8	50

12-2-13
REGISTERED CIVIL ENGINEER DATE

12-16-13
PLANS APPROVAL DATE

REGISTERED PROFESSIONAL ENGINEER CRESENCIO GARCIA No. 63721 Exp 9/30/14 CIVIL STATE OF CALIFORNIA

THE STATE OF CALIFORNIA OR ITS OFFICERS OR AGENTS SHALL NOT BE RESPONSIBLE FOR THE ACCURACY OR COMPLETENESS OF SCANNED COPIES OF THIS PLAN SHEET.

LEGEND:

(N) - NOT A SEPARATE PAY ITEM, FOR INFORMATION ONLY.

LOCATIONS OF EXISTING SURVEY MONUMENTS

No.	LOCATION PM	No. OF SURVEY MONUMENTS EA	DESCRIPTION
151	38.8	1	Std DISK, IN WELL, AT ℄ IMP Hwy 38
152	38.9	1	Std DISK, IN WELL, AT ℄ IMP Hwy 38
153	38.9	1	Std DISK, IN WELL, AT ℄ IMP Hwy 38
154	38.9	1	Std DISK, IN WELL, AT ℄ IMP Hwy 38
155	39.0	1	Std DISK, IN WELL, AT ℄ IMP Hwy 38
156	39.0	1	Std DISK, IN WELL, AT ℄ IMP Hwy 38
157	39.1	1	Std DISK, IN WELL, AT ℄ IMP Hwy 38
158	39.1	1	Std DISK, IN WELL, AT ℄ IMP Hwy 38
159	39.3	1	Std DISK, IN WELL, AT ℄ IMP Hwy 38
160	39.4	1	Std DISK, IN WELL, AT ℄ IMP Hwy 38
161	39.6	1	Std DISK, IN WELL, AT ℄ IMP Hwy 38
162	39.6	1	Std DISK, IN WELL, AT ℄ IMP Hwy 38
163	39.7	1	Std DISK, IN WELL, AT ℄ IMP Hwy 38
164	39.7	1	Std DISK, IN WELL, AT ℄ IMP Hwy 38
165	39.7	1	Std DISK, IN WELL, AT ℄ IMP Hwy 38
166	39.7	1	Std DISK, IN WELL, AT ℄ IMP Hwy 38
167	39.8	1	Std DISK, IN WELL, AT ℄ IMP Hwy 38
168	39.9	1	Std DISK, IN WELL, AT ℄ IMP Hwy 38
169	40.0	1	Std DISK, IN WELL, AT ℄ IMP Hwy 38
170	40.0	1	Std DISK, IN WELL, AT ℄ IMP Hwy 38
171	40.1	1	Std DISK, IN WELL, AT ℄ IMP Hwy 38
172	40.1	1	Std DISK, IN WELL, AT ℄ IMP Hwy 38
173	40.2	1	Std DISK, IN WELL, AT ℄ IMP Hwy 38
174	40.2	1	Std DISK, IN WELL, AT ℄ IMP Hwy 38
175	40.2	1	Std DISK, IN WELL, AT ℄ IMP Hwy 38
176	40.3	1	Std DISK, IN WELL, AT ℄ IMP Hwy 38
177	40.3	1	Std DISK, IN WELL, AT ℄ IMP Hwy 38
178	40.4	1	Std DISK, IN WELL, AT ℄ IMP Hwy 38
179	40.4	1	Std DISK, IN WELL, AT ℄ IMP Hwy 38
180	40.4	1	Std DISK, IN WELL, AT ℄ IMP Hwy 38
181	40.5	1	Std DISK, IN WELL, AT ℄ IMP Hwy 38
182	40.5	1	Std DISK, IN WELL, AT ℄ IMP Hwy 38
183	40.6	1	Std DISK, IN WELL, AT ℄ IMP Hwy 38
184	40.6	1	Std DISK, IN WELL, AT ℄ IMP Hwy 38
185	40.7	1	Std DISK, IN WELL, AT ℄ IMP Hwy 38
186	40.7	1	Std DISK, IN WELL, AT ℄ IMP Hwy 38
187	40.8	1	Std DISK, IN WELL, AT ℄ IMP Hwy 38
188	40.9	1	Std DISK, IN WELL, AT ℄ IMP Hwy 38
189	40.9	1	Std DISK, IN WELL, AT ℄ IMP Hwy 38
190	40.9	1	Std DISK, IN WELL, AT ℄ IMP Hwy 38
191	41.0	1	Std DISK, IN WELL, AT ℄ IMP Hwy 38
192	41.0	1	Std DISK, IN WELL, AT ℄ IMP Hwy 38
193	41.1	1	Std DISK, IN WELL, AT ℄ IMP Hwy 38
194	41.1	1	Std DISK, IN WELL, AT ℄ IMP Hwy 38
195	41.2	1	Std DISK, IN WELL, AT ℄ IMP Hwy 38
196	41.2	1	Std DISK, IN WELL, AT ℄ IMP Hwy 38
197	41.3	1	Std DISK, IN WELL, AT ℄ IMP Hwy 38
198	41.3	1	Std DISK, IN WELL, AT ℄ IMP Hwy 38
199	41.3	1	Std DISK, IN WELL, AT ℄ IMP Hwy 38
200	41.6	1	Std DISK, IN WELL, AT ℄ IMP Hwy 38
201	41.9	1	Std DISK, IN WELL, AT ℄ IMP Hwy 38
202	42.0	1	Std DISK, IN WELL, AT ℄ IMP Hwy 38
203	42.1	1	Std DISK, IN WELL, AT ℄ IMP Hwy 38
204	42.1	1	Std DISK, IN WELL, AT ℄ IMP Hwy 38
205	42.3	1	Std DISK, IN WELL, AT ℄ IMP Hwy 38
206	42.3	1	Std DISK, IN WELL, AT ℄ IMP Hwy 38
207	42.4	1	Std DISK, IN WELL, AT ℄ IMP Hwy 38
208	42.4	1	Std DISK, IN WELL, AT ℄ IMP Hwy 38
209	42.5	1	Std DISK, IN WELL, AT ℄ IMP Hwy 38
210	42.5	1	Std DISK, IN WELL, AT ℄ IMP Hwy 38

LOCATIONS OF EXISTING SURVEY MONUMENTS

No.	LOCATIONS PM	No. OF SURVEY MONUMENTS EA(N)	DESCRIPTION
211	42.6	1	Std DISK, IN WELL, AT ℄ IMP Hwy 38
212	42.6	1	Std DISK, IN WELL, AT ℄ IMP Hwy 38
213	42.6	1	Std DISK, IN WELL, AT ℄ IMP Hwy 38
214	42.7	1	Std DISK, IN WELL, AT ℄ IMP Hwy 38
215	42.7	1	Std DISK, IN WELL, AT ℄ IMP Hwy 38
216	42.7	1	Std DISK, IN WELL, AT ℄ IMP Hwy 38
217	42.8	1	Std DISK, IN WELL, AT ℄ IMP Hwy 38
218	42.9	1	Std DISK, IN WELL, AT ℄ IMP Hwy 38
219	42.9	1	Std DISK, IN WELL, AT ℄ IMP Hwy 38
220	42.9	1	Std DISK, IN Conc, STAMPED "DEACON AZIMUTH 1982", IN TURNOUT
221	43.0	1	Std DISK, IN WELL, AT ℄ IMP Hwy 38
222	43.0	1	Std DISK, IN WELL, AT ℄ IMP Hwy 38
223	43.0	1	Std DISK, IN WELL, AT ℄ IMP Hwy 38
224	43.1	1	Std DISK, IN WELL, AT ℄ IMP Hwy 38
225	43.1	1	Std DISK, IN WELL, AT ℄ IMP Hwy 38
226	43.2	1	Std DISK, IN WELL, AT ℄ IMP Hwy 38
227	43.2	1	Std DISK, IN WELL, AT ℄ IMP Hwy 38
228	43.3	1	Std DISK, IN WELL, AT ℄ IMP Hwy 38
229	43.3	1	Std DISK, IN WELL, AT ℄ IMP Hwy 38
230	43.4	1	Std DISK, IN WELL, AT ℄ IMP Hwy 38
231	43.4	1	Std DISK, IN WELL, AT ℄ IMP Hwy 38
232	43.5	1	Std DISK, IN WELL, AT ℄ IMP Hwy 38
233	43.5	1	Std DISK, IN WELL, AT ℄ IMP Hwy 38
234	43.7	1	Std DISK, IN WELL, AT ℄ IMP Hwy 38
235	43.7	1	Std DISK, IN WELL, AT ℄ IMP Hwy 38
236	43.9	1	Std DISK, IN WELL, AT ℄ IMP Hwy 38
237	43.9	1	BRASS CAP, IN Conc, STAMPED "LS 2121", C¼ Cor Sect 28 T2N R2E SBM
238	43.9	1	Std DISK, IN WELL, AT ℄ IMP Hwy 38
239	44.1	1	Std DISK, IN WELL, AT ℄ IMP Hwy 38
240	44.1	1	Std DISK, IN WELL, AT ℄ IMP Hwy 38
241	44.2	1	Std DISK, IN WELL, AT ℄ IMP Hwy 38
242	44.4	1	Std DISK, IN WELL, AT ℄ IMP Hwy 38
243	44.5	1	Std DISK, IN WELL, AT ℄ IMP Hwy 38
244	44.6	1	Std DISK, IN WELL, AT ℄ IMP Hwy 38
245	44.7	1	Std DISK, IN WELL, AT ℄ IMP Hwy 38
246	44.9	1	Std DISK, IN WELL, AT ℄ IMP Hwy 38
247	45.2	1	Std DISK, IN WELL, AT ℄ IMP Hwy 38
248	45.2	1	Std DISK, IN WELL, AT ℄ IMP Hwy 38
249	45.3	1	Std DISK, IN WELL, AT ℄ IMP Hwy 38
250	45.4	1	Std DISK, IN WELL, AT ℄ IMP Hwy 38
251	45.5	1	Std DISK, IN WELL, AT ℄ IMP Hwy 38
252	45.7	1	Std DISK, IN WELL, AT ℄ IMP Hwy 38
253	45.7	1	Std DISK, IN WELL, AT ℄ IMP Hwy 38
254	45.7	1	GIN SPIKE WTH CALTRANS WASHER, STAMPED "GPS 45.70", (PM 45.7)
255	46.0	1	1" IP, TAG "LS 3913", AT S LINE Sec 19 (S LINE TRACT 11220) & Hwy 38 (PM 46.0)
256	46.0	1	Std DISK, IN WELL, AT ℄ IMP Hwy 38
257	46.3	1	1" IP, TAG "LS 3913", AT FOX ROAD & Hwy 38 (PM 46.3)
258	46.4	1	Std DISK, IN WELL, AT ℄ IMP Hwy 38
259	46.4	1	Std DISK, IN WELL, AT ℄ IMP Hwy 38
260	46.5	1	Std DISK, IN WELL, AT ℄ IMP Hwy 38

CONSTRUCTION DETAILS

C-6

STATE OF CALIFORNIA - DEPARTMENT OF TRANSPORTATION
Caltrans
DESGIN
FUNCTIONAL SUPERVISOR: SERGIO E. AVILA
CALCULATED-DESIGNED BY: EVA MARISCAL
CHECKED BY: CRESENCIO GARCIA
REVISED BY
DATE REVISED

LAST REVISION 12-02-13
DATE PLOTTED => 13-DEC-2013
TIME PLOTTED => 10:51

Dist	COUNTY	ROUTE	POST MILES TOTAL PROJECT	SHEET No.	TOTAL SHEETS
08	SBd	38	15.0/49.5	9	50

12-2-13
REGISTERED CIVIL ENGINEER DATE

12-16-13
PLANS APPROVAL DATE

REGISTERED PROFESSIONAL ENGINEER CRESENCIO GARCIA No. 63721 Exp 9/30/14 CIVIL STATE OF CALIFORNIA

THE STATE OF CALIFORNIA OR ITS OFFICERS OR AGENTS SHALL NOT BE RESPONSIBLE FOR THE ACCURACY OR COMPLETENESS OF SCANNED COPIES OF THIS PLAN SHEET.

LOCATIONS OF EXISTING SURVEY MONUMENTS

No.	LOCATIONS PM	No. OF SURVEY MONUMENTS EA (N)	DESCRIPTIONS
261	46.6	1	Std DISK, IN WELL, AT ℄ IMP Hwy 38
262	46.6	1	Std DISK, IN WELL, AT ℄ IMP Hwy 38
263	46.7	1	Std DISK, IN WELL, STAMPED" BPR L 845+00.00 POT=. / G60 845+00.00 POT "
264	46.9	1	Std DISK, IN WELL, STAMPED "G60 856+92.63 BC", ℄ Hwy 38
265	47.0	1	Std DISK, IN WELL, STAMPED "G60 860+20.04 EC", ℄ Hwy 38
266	47.1	1	Std DISK, IN WELL, STAMPED "G60 864+35.40 BC", ℄ Hwy 38
267	47.1	1	Std DISK, IN WELL, STAMPED "G60 866+28.60 EC", ℄ Hwy 38
268	47.2	1	Std DISK, IN WELL, STAMPED "G60 871+66.31 BC", ℄ Hwy 38
269	47.2	1	Std DISK, IN WELL, STAMPED "G60 873+83.02 EC", ℄ Hwy 38
270	47.3	1	Std DISK, IN WELL, STAMPED "G60 877+99.82 BC", ℄ Hwy 38
271	47.4	1	Std DISK, IN WELL, STAMPED "G60 880+42.21 EC", ℄ Hwy 38
272	47.4	1	Std DISK, IN WELL, STAMPED "G60 883+38.46 BC", ℄ Hwy 38
273	47.4	1	Std DISK, IN WELL, STAMPED "G60 884+88.13 EC", ℄ Hwy 38
274	47.5	1	Std DISK, IN WELL, STAMPED "G60 889+04.71 BC", ℄ Hwy 38
275	47.5	1	Std DISK, IN WELL, STAMPED "G60 890+74.82 POC", ℄ IMP Hwy 38
276	47.5	1	Std DISK, IN WELL, STAMPED "℄ GREENSPOT Rd - TRACT LINE PI", SOUTH LINE TRACT 5810 & ℄ Hwy 38
277	47.5	1	Std DISK, IN WELL, STAMPED" G60 891+37.54 EC=. / G60 891+44.83 POT ℄ Hwy 38
278	47.7	1	Std DISK, IN WELL, STAMPED "℄ GREENSPOT Rd - DUTCH WAY PI", AT ℄ DUTCH WAY & ℄ Hwy 38
279	47.8	1	Std DISK, IN WELL, STAMPED "℄ GREENSPOT Rd ANGLE PT"
280	47.8	1	Std DISK, IN WELL, STAMPED "℄ GREENSPOT Rd - TRACT LINE PI", SE 5/32 ly LINE LOT 15 TRACT 3645 & ℄ Hwy 38
281	47.9	1	Std DISK, IN WELL, STAMPED "℄ GREENSPOT Rd - GORDA WAY PI", ℄ GORDA WAY (MANN DRIVE) & ℄ Hwy 38
282	47.9	1	Std DISK, IN WELL, STAMPED "℄ GREENSPOT Rd ANGLE PT", ℄ Hwy 38, ADJACENT TO LOT 12 TRACT 3645
283	47.9	1	Std DISK, IN WELL, STAMPED "℄ GREENSPOT Rd - TRACT LINE PI", SE 5/32 ly LINE LOT 16 TRACT 3645 & ℄ Hwy 38
284	48.0	1	Std DISK, IN WELL, STAMPED "℄ GREENSPOT Rd ANGLE PT", ℄ Hwy 38, ADJACENT TO LOT 2 TRACT 3645
285	48.1	1	Std DISK, IN WELL, STAMPED "℄ GREENSPOT Rd - MALABAR WAY PI"
286	48.2	1	Std DISK, IN WELL, STAMPED "℄ GREENSPOT Rd - ℄ E BIG BEAR Blvd PI"
287	48.3	1	Std DISK, IN WELL, STAMPED "℄ E BIG BEAR LAKE Blvd - PINE CONE WAY PI"
288	48.3	1	Std DISK, IN WELL, STAMPED "℄ E BIG BEAR LAKE Blvd - MANZANITA Dr PI"
289	48.4	1	Std DISK, IN WELLL, STAMPED "℄ E BIG BEAR LAKE Blvd - LAKE Ave PI"
290	48.5	1	Std DISK, IN WELL, STAMPED "℄ E BIG BEAR LAKE Blvd - S E COR TRACT PI"
291	48.5	1	Std DISK, IN WELL, STAMPED "℄ E BIG BEAR LAKE Blvd - BUFFLEHEAD Dr PI"
292	48.6	1	1" IP, PLASTIC PLUG "RCE 8591", AT PI TEAL DRIVE & Hwy 38
293	48.7	1	1" IP, PLASTIC PLUG "RCE 8591", AT PI SHORE DRIVE & Hwy 38
294	48.8	1	1" IP, No TAG, AT PI BLUEBILL DRIVE & Hwy 38
295	49.2	1	1" IP, No TAG, AT PI PARADISE WAY & Hwy 38
296	49.3	1	NAIL WITH SBD COUNTY WASHER, AT PI GOLD MOUNTAIN DRIVE & Hwy 38
297	49.4	1	NAIL WITH SBD COUNTY WASHER, AT PI M† DOBLE DRIVE & Hwy 38
298	49.5	1	NAIL WITH CALTRANS WASHER, AT PI GREENWAY DRIVE (Hwy 18) & Hwy 38

(N) - NOT A SEPARATE PAY ITEM, FOR INFORMATION ONLY.

CONSTRUCTION DETAILS

C-7

REVISED BY | DATE REVISED
EVA MARISCAL | CRESENCIO GARCIA
CALCULATED-DESIGNED BY | CHECKED BY
FUNCTIONAL SUPERVISOR: SERGIO E. AVILA

STATE OF CALIFORNIA - DEPARTMENT OF TRANSPORTATION
Caltrans
DESGIN

LAST REVISION 12-02-13 | DATE PLOTTED => 13-DEC-2013 | TIME PLOTTED => 10:51

Dist	COUNTY	ROUTE	POST MILES TOTAL PROJECT	SHEET No.	TOTAL SHEETS
08	SBd	38	15.0/49.5	10	50

12-2-13
REGISTERED CIVIL ENGINEER DATE

12-16-13
PLANS APPROVAL DATE

REGISTERED PROFESSIONAL ENGINEER CRESENCIO GARCIA No. 63721 Exp. 9/30/14 CIVIL STATE OF CALIFORNIA

THE STATE OF CALIFORNIA OR ITS OFFICERS OR AGENTS SHALL NOT BE RESPONSIBLE FOR THE ACCURACY OR COMPLETENESS OF SCANNED COPIES OF THIS PLAN SHEET.

NOTES:

1. VEGETATION CONTROL WIDTH MAY BE VARIED BY THE ENGINEER TO SUIT CONDITIONS ENCOUNTERED IN THE FIELD, REFER TO REVISED STANDARD PLANS RSP A77N2, A77N3, A77N5, A77N6, & A77N8 .
2. EXACT LOCATIONS AND DIMENSIONS OF GUARDRAIL INSTALLATION WILL BE DETERMINED BY THE ENGINEER, USE MGS TRANSITION TO EXISTING MBGR AT EACH CONNECTION, REFER TO RSP A77U5.

ABBREVIATIONS:

AITS- ALTERNATIVE IN-LINE TERMINAL SYSTEM

AFTS- ALTERNATIVE FLARED TERMINAL SYSTEM

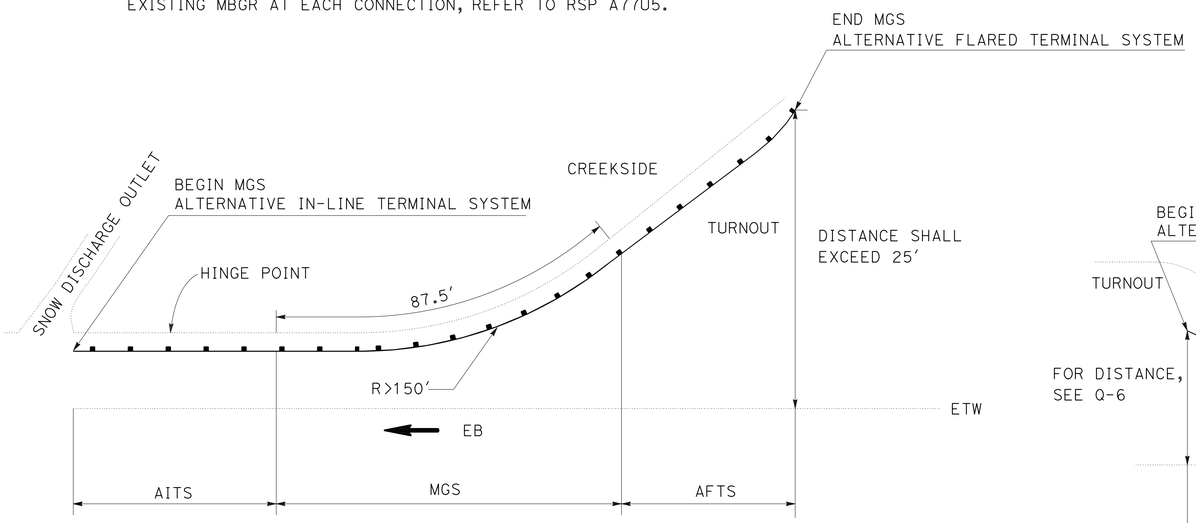

DETAIL "A" LAYOUT

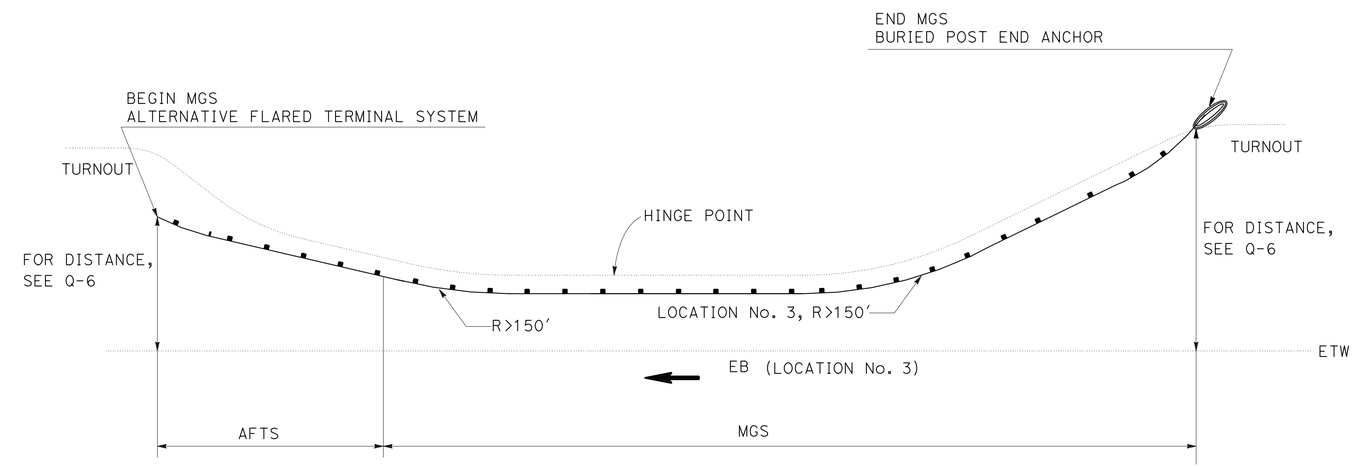

DETAIL "B" LAYOUT

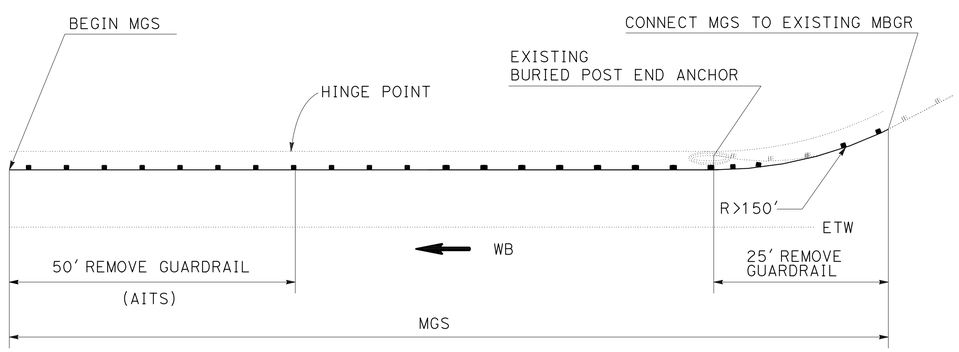

DETAIL "C" LAYOUT

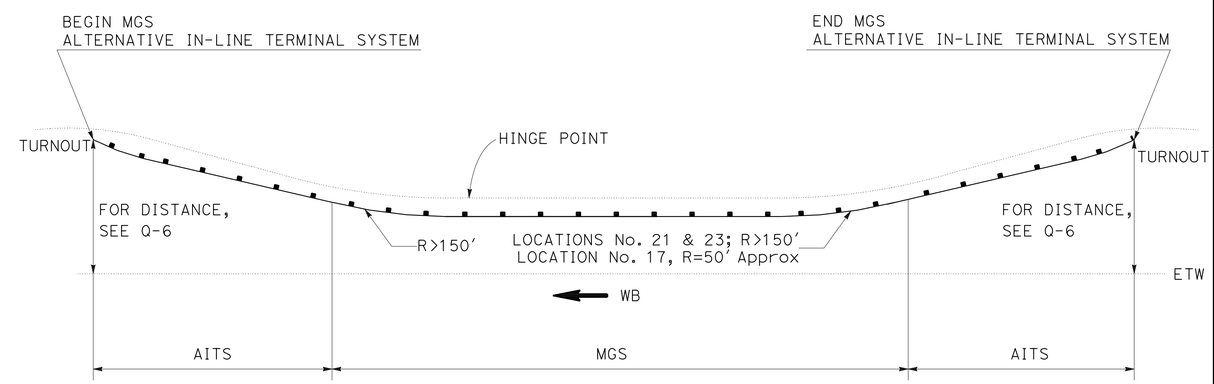

DETAIL "D" LAYOUT

CONSTRUCTION DETAILS

NO SCALE

C-8

STATE OF CALIFORNIA - DEPARTMENT OF TRANSPORTATION
Caltrans
DESGIN
FUNCTIONAL SUPERVISOR: SERGIO E. AVILA
CALCULATED-DESIGNED BY: CRESENCIO GARCIA
CHECKED BY: SERGIO E. AVILA
REVISED BY
DATE REVISED

LAST REVISION 12-02-13
DATE PLOTTED => 13-DEC-2013
TIME PLOTTED => 10:51

Dist	COUNTY	ROUTE	POST MILES TOTAL PROJECT	SHEET No.	TOTAL SHEETS
08	SBd	38	15.0/49.5	11	50

12-2-13
REGISTERED CIVIL ENGINEER DATE

12-16-13
PLANS APPROVAL DATE

REGISTERED PROFESSIONAL ENGINEER
CRESENCIO GARCIA
No. 63721
Exp. 9/30/14
CIVIL
STATE OF CALIFORNIA

THE STATE OF CALIFORNIA OR ITS OFFICERS OR AGENTS SHALL NOT BE RESPONSIBLE FOR THE ACCURACY OR COMPLETENESS OF SCANNED COPIES OF THIS PLAN SHEET.

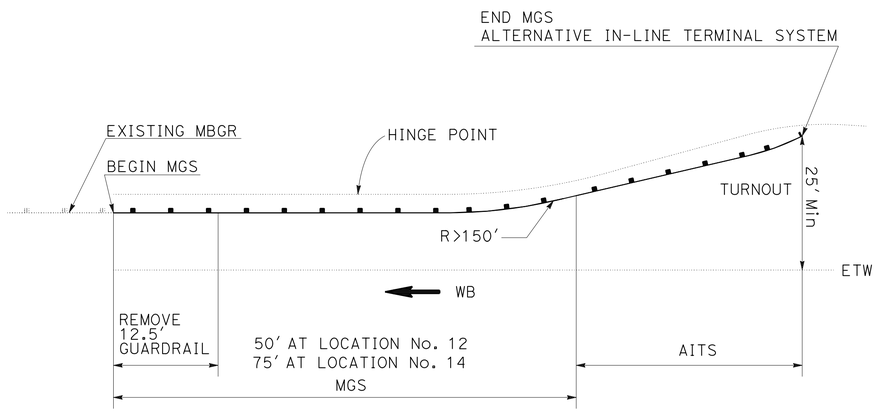

DETAIL "E" LAYOUT

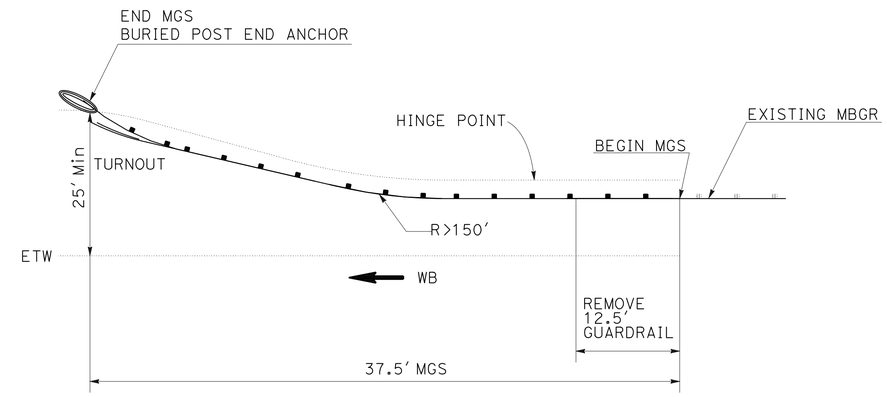

DETAIL "F" LAYOUT

CONSTRUCTION DETAILS

NO SCALE

C-9

STATE OF CALIFORNIA - DEPARTMENT OF TRANSPORTATION
Caltrans
DESGIN
FUNCTIONAL SUPERVISOR: SERGIO E. AVILA
CALCULATED-DESIGNED BY: CRESENCIO GARCIA
CHECKED BY: SERGIO E. AVILA
REVISED BY
DATE REVISED

LAST REVISION 12-02-13
DATE PLOTTED => 13-DEC-2013
TIME PLOTTED => 10:51

Dist	COUNTY	ROUTE	POST MILES TOTAL PROJECT	SHEET No.	TOTAL SHEETS
08	SBd	38	15.0/49.5	12	50

Thanh Trinh 12-2-13
REGISTERED CIVIL ENGINEER DATE

12-16-13
PLANS APPROVAL DATE

REGISTERED PROFESSIONAL ENGINEER THANH TRINH No. C41189 Exp. 3-31-15 CIVIL STATE OF CALIFORNIA

THE STATE OF CALIFORNIA OR ITS OFFICERS OR AGENTS SHALL NOT BE RESPONSIBLE FOR THE ACCURACY OR COMPLETENESS OF SCANNED COPIES OF THIS PLAN SHEET.

NOTES:

1. LOCATIONS OF CONSTRUCTION SIGNS SHOWN ARE APPROXIMATE. EXACT LOCATIONS WILL BE DETERMINED BY THE ENGINEER.
2. LOCATIONS OF THE PCMS SIGNS SHALL BE DETERMINED BY THE ENGINEER.

LEGEND:

- ONE POST SIGN
- TWO POST SIGN
- WORK AREA
- (X) CONSTRUCTION AREA SIGN CODE
- FLASHING BEACON

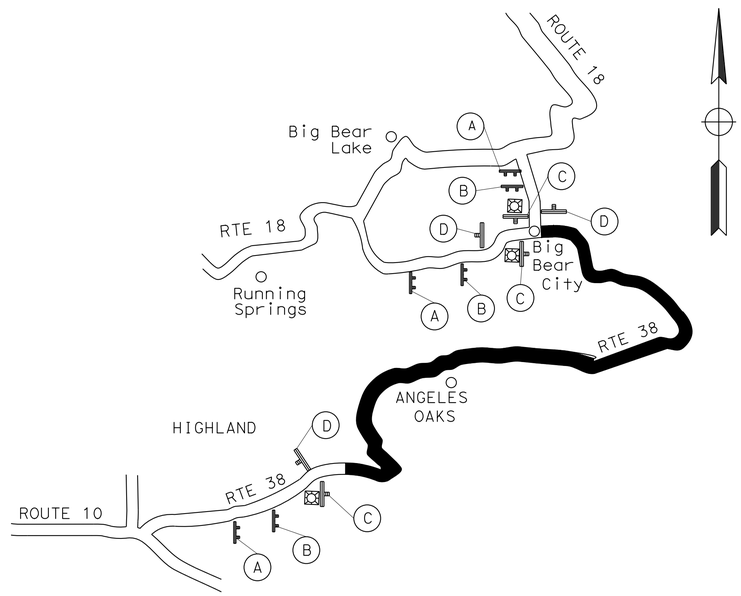

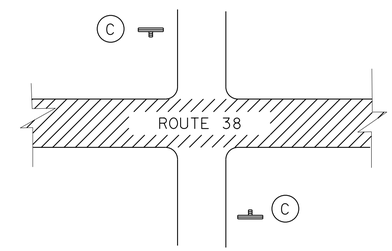

TYPICAL INTERSECTION

PORTABLE CMS

QUANTITY (ea)
3

FLASHING BEACON (PORTABLE)

QUANTITY (ea)
3

STATIONARY MOUNTED CONSTRUCTION AREA SIGNS

SIGN No. (X)	SIGN CODE		PANEL SIZE	SIGN MESSAGE	NUMBER OF POSTS AND SIZE	NUMBER OF SIGNS
	FEDERAL	CALIFORNIA				
A		C40	102" x 42"	TRAFFIC FINES DOUBLED IN CONSTRUCTION ZONES	2 - 4" x 6"	3
B	G20-1		36" x 18"	ROAD WORK NEXT 34 MILES	1 - 4" x 4"	3
C	W20-1		48" x 48"	ROAD WORK AHEAD	1 - 6" x 6"	51
D	G20-2		48" x 18"	END ROAD WORK	1 - 4" x 4"	3

CONSTRUCTION AREA SIGNS

NO SCALE

CS-1

APPROVED FOR CONSTRUCTION AREA SIGN WORK ONLY

STATE OF CALIFORNIA - DEPARTMENT OF TRANSPORTATION
Caltrans® TRAFFIC DESIGN A
FUNCTIONAL SUPERVISOR: BILL WASSER
CALCULATED-DESIGNED BY: TRI TRAN
CHECKED BY: THANH TRINH
REVISED BY / DATE REVISED

LAST REVISION 12-02-13 | DATE PLOTTED => 13-DEC-2013 | TIME PLOTTED => 10:51

Dist	COUNTY	ROUTE	POST MILES TOTAL PROJECT	SHEET No.	TOTAL SHEETS
08	SBd	38	15.0/49.5	13	50

Thanh Trinh 12-2-13
REGISTERED CIVIL ENGINEER DATE

12-16-13
PLANS APPROVAL DATE

REGISTERED PROFESSIONAL ENGINEER
THANH TRINH
No. C41189
Exp. 3-31-15
CIVIL
STATE OF CALIFORNIA

THE STATE OF CALIFORNIA OR ITS OFFICERS OR AGENTS SHALL NOT BE RESPONSIBLE FOR THE ACCURACY OR COMPLETENESS OF SCANNED COPIES OF THIS PLAN SHEET.

PAVEMENT DELINEATION QUANTITIES

LOCATION OR DIRECTION	DETAIL No. OR PAVEMENT MARKING TYPE	REMOVE (N) PAVEMENT MARKER	PAVEMENT MARKER RETROREFLECTIVE-RECESSED			THERMOPLASTIC PAVEMENT MARKING		THERMOPLASTIC TRAFFIC STRIPE (RECESSED)			REMARKS
			D	G	H	YELLOW	WHITE	4" YELLOW	4" WHITE	8" WHITE	
		EA	EA			SQFT		LF			
WB/EB PM 15.0/49.5	6	146	146					6916			
	9	116		116					5544		
	19	786	262		524			12540			
	21							80220			
	22	6682	6682					80164			
	27B								365000		
	29	222	222					2660			
	37B			42						740	COMBINE WITH DETAIL 38B
	38A									8720	DETAIL 38A QUANTITIES ARE COVERED FOR 14 TURNOUTS, 1 LANE DROP AT INTERSECTIONS, AND 13 TYPE IV ARROWS.
	TYPE IV (L) ARROW (10 EA)						150				
	TYPE IV (R) ARROW (3 EA)						45				
	"SIGNAL AHEAD" (2 EA)						126				
	"SLOW SCHOOL XING" (2 EA)					158					
	LIMIT LINE, CROSSWALKS & CROSSHATCH					150	80				
SUBTOTAL			7312	158	524	308	401	182500	370544	9460	
TOTAL		7952	7994			709		562504			

(N) NOT A SEPARATE PAY ITEM, FOR INFORMATION ONLY.

LOCATION No.	LOCATION PM	LOCATION DIR	GUARD RAILING DELINEATOR (CLASS 1) (EA) (1)	OBJECT MARKER TYPE L-1 (EA) (2)
1	22.493-22.534	EB	3	1
2	Approx 23.75	EB	1	1
3	Approx 24.348-24.383	EB	4	
4	24.756-24.778	EB	1	1
5	37.479-37.519	EB	4	
6	41.307-41.367	EB	5	
7	43.263-43.289	EB	2	
8	Approx PM 17.59	WB	7	1
9	20.662-20.719	WB	6	
10	21.31-21.47	WB	22	
11	21.66-21.71	WB	3	1
12	Approx. 22.33	WB	1	
13	Approx 22.35	WB	1	
14	Approx. 23.1	WB	2	
15	23.20-23.30	WB	11	1
16	23.48-23.71	WB	35	
17	24.333-24.390	WB	6	
18	26.614-26.652	WB	2	
19	29.423-29.506	WB	9	
20	29.675-29.710	WB	3	
21	30.116-30.166	WB	4	
22	30.163-30.217	WB	7	
23	30.244-30.301	WB	6	
24	39.10-39.145	WB	4	
25	40.36-40.396	WB	5	1
TOTAL			154	7

NOTES: (1) GUARD RAILING DELINEATOR SPACING: #35'
(2) OBJECT MARKER TYPE L-1 INSTALLED AT THE BEGINING OF FLARE.

PAVEMENT DELINEATION QUANTITIES
PDQ-1

STATE OF CALIFORNIA - DEPARTMENT OF TRANSPORTATION
Caltrans TRAFFIC DESIGN
FUNCTIONAL SUPERVISOR: BILL WASSER
CALCULATED-DESIGNED BY: TRI TRAN
CHECKED BY: THANH TRINH
REVISED BY
DATE REVISED

LAST REVISION 12-02-13
DATE PLOTTED => 13-DEC-2013
TIME PLOTTED => 10:51

Dist	COUNTY	ROUTE	POST MILES TOTAL PROJECT	SHEET No.	TOTAL SHEETS
08	SBd	38	15.0/49.5	14	50

REGISTERED CIVIL ENGINEER 12-2-13 DATE

12-16-13
PLANS APPROVAL DATE

REGISTERED PROFESSIONAL ENGINEER CRESENCIO GARCIA No. 63721 Exp 9/30/14 CIVIL STATE OF CALIFORNIA

THE STATE OF CALIFORNIA OR ITS OFFICERS OR AGENTS SHALL NOT BE RESPONSIBLE FOR THE ACCURACY OR COMPLETENESS OF SCANNED COPIES OF THIS PLAN SHEET.

NOTE:

1. EXACT LOCATIONS AND DIMENSIONS OF DIGOUTS WILL BE DETERMINED BY THE ENGINEER.

REPLACE ASPHALT CONCRETE SURFACING

DIGOUT NUMBER	PM	DIRECTION	LANE NUMBER	WHEEL TRACK			DIMENSION OF DIGOUT (N)			REPLACE AC SURFACING
				LEFT	CENTER	RIGHT	LENGTH	WIDTH	DEPTH	(CY)
1	15.4	E/B	1		X	X	125′	4′	0.5′	18.5
2	15.6	E/B	1			x	75′	4′	0.5′	5.6
3	16.1	E/B	1			x	50′	4′	0.5′	3.7
4	17.6	E/B	1		X		30′	4′	0.5′	2.2
5	17.7	E/B	1		X		75′	4′	0.5′	5.6
6	17.9	E/B	1			X	150′	4′	0.5′	11.1
7	18.3	E/B	1			X	25′	4′	0.5′	1.9
8	18.4	E/B	1			X	100′	4′	0.5′	7.4
9	18.5	E/B	1			X	200′	4′	0.5′	14.8
10	20.5	E/B	1		X	X	60′	4′	0.5′	8.9
11	20.6	E/B	1			X	100′	4′	0.5′	7.4
12	20.72	E/B	1	X	X	X	400′	4′	0.5′	88.9
13	21.2	E/B	1			X	150′	4′	0.5′	11.1
14	21.35	E/B	1		X	X	200′	4′	0.5′	29.6
15	21.40	E/B	1			X	75′	4′	0.5′	5.6
16	22.1	E/B	1		X		100′	4′	0.5′	7.4
17	22.5	E/B	1		X		100′	4′	0.5′	7.4
18	22.8	E/B	1			X	75′	4′	0.5′	5.6
19	23.1	E/B	1			X	50′	4′	0.5′	3.7
20	23.5	E/B	1			X	75′	4′	0.5′	5.6
21	23.6	E/B	1			X	50′	4′	0.5′	3.7
22	24.0	E/B	1			X	50′	4′	0.5′	3.7
23	24.5	E/B	1			X	100′	4′	0.5′	7.4
24	24.6	E/B	1			X	100′	4′	0.5′	7.4
25	24.8	E/B	1			X	100′	4′	0.5′	7.4
26	25.1	E/B	1		X	X	300′	4′	0.5′	44.4
27	25.2	E/B	1		X	X	200′	4′	0.5′	29.6
28	25.4	E/B	1		X	X	150′	4′	0.5′	22.2
29	25.5	E/B	1		X	X	200′	4′	0.5′	29.6
30	25.6	E/B	1		X	X	200′	4′	0.5′	29.6
31	25.9	E/B	1		X	X	200′	4′	0.5′	29.6
32	26.0	E/B	1		X	X	200′	4′	0.5′	29.6
33	26.3	E/B	1		X	X	200′	4′	0.5′	29.6
34	26.85	E/B	1			X	200′	4′	0.5′	14.8
35	27.0	E/B	1			X	200′	4′	0.5′	14.8
36	27.3	E/B	1		X	X	200′	4′	0.5′	29.6
37	28.2	E/B	1		X	X	350′	4′	0.5′	51.9
38	28.4	E/B	1		X	X	200′	4′	0.5′	29.6
39	28.6	E/B	1		X		76′	4′	0.5′	5.6
40	28.7	E/B	1		X	X	150′	4′	0.5′	22.2
41	28.9	E/B	1			X	97′	4′	0.5′	7.2
42	29.0	E/B	1		X		600′	4′	0.5′	44.4
43	29.4	E/B	1		X	X	103′	4′	0.5′	15.3
44	29.5	E/B	1		X		350′	4′	0.5′	25.9
45	29.69	E/B	1		X		152′	4′	0.5′	11.3
46	29.70	E/B	1		X	X	225′	4′	0.5′	33.3
47	29.8	E/B	1		X		76′	4′	0.5′	5.6
48	29.9	E/B	1			X	105′	4′	0.5′	7.8
49	30.5	E/B	1		X		402′	4′	0.5′	29.8
50	30.6	E/B	1		X		66′	4′	0.5′	4.9
51	30.70	E/B	1			X	165′	4′	0.5′	12.2
52	30.74	E/B	1		X		500′	4′	0.5′	37.0
53	31.27	E/B	1		X		300′	4′	0.5′	22.2
54	31.31	E/B	1		X		200′	4′	0.5′	14.8
55	31.58	E/B	1			X	51′	4′	0.5′	3.8
SUBTOTAL										969.8

(N) - NOT A SEPARATE PAY ITEM, FOR INFORMATION ONLY.

SUMMARY OF QUANTITIES

Q-1

STATE OF CALIFORNIA - DEPARTMENT OF TRANSPORTATION
Caltrans
DESGIN
FUNCTIONAL SUPERVISOR: SERGIO E. AVILA
CALCULATED-DESIGNED BY: DANH NGUYEN
CHECKED BY: CRESENCIO GARCIA
REVISED BY
DATE REVISED

LAST REVISION 12-02-13
DATE PLOTTED => 13-DEC-2013
TIME PLOTTED => 10:51

Dist	COUNTY	ROUTE	POST MILES TOTAL PROJECT	SHEET No.	TOTAL SHEETS
08	SBd	38	15.0/49.5	15	50

REGISTERED CIVIL ENGINEER DATE 12-2-13

PLANS APPROVAL DATE 12-16-13

REGISTERED PROFESSIONAL ENGINEER CRESENCIO GARCIA No. 63721 Exp. 9/30/14 CIVIL STATE OF CALIFORNIA

THE STATE OF CALIFORNIA OR ITS OFFICERS OR AGENTS SHALL NOT BE RESPONSIBLE FOR THE ACCURACY OR COMPLETENESS OF SCANNED COPIES OF THIS PLAN SHEET.

REPLACE ASPHALT CONCRETE SURFACING

DIGOUT NUMBER	PM	DIRECTION	LANE NUMBER	WHEEL TRACK			DIMENSION OF DIGOUT (N)			REPLACE AC SURFACING
				LEFT	CENTER	RIGHT	LENGTH	WIDTH	DEPTH	(CY)
56	31.61	E/B	1			X	100′	4′	0.5′	7.4
57	31.9	E/B	1		X		162′	4′	0.5′	12.0
58	32.13	E/B	1		X		97′	4′	0.5′	7.2
59	32.14	E/B	1		X		72′	4′	0.5′	5.3
60	32.35	E/B	1		X	X	65′	4′	0.5′	9.6
61	32.5	E/B	1		X		650′	4′	0.5′	48.1
62	32.5	E/B	1			X	200′	4′	0.5′	14.8
63	32.75	E/B	1		X		1287′	4′	0.5′	95.3
64	32.75	E/B	1			X	235′	4′	0.5′	17.4
65	33.1	E/B	1			X	60′	4′	0.5′	4.4
66	33.2	E/B	1			X	320′	4′	0.5′	23.7
67	33.2	E/B	1			X	406′	4′	0.5′	30.1
68	33.4	E/B	1			X	127′	4′	0.5′	9.4
69	33.8	E/B	1		X		50′	4′	0.5′	3.7
70	33.9	E/B	1		X		37′	4′	0.5′	2.7
71	34.1	E/B	1		X		50′	4′	0.5′	3.7
72	34.2	E/B	1			X	60′	4′	0.5′	4.4
73	34.6	E/B	1		X		210′	4′	0.5′	15.6
74	35.1	E/B	1		X		60′	4′	0.5′	4.4
75	36.0	E/B	1		X		50′	4′	0.5′	3.7
76	36.4	E/B	1		X		100′	4′	0.5′	7.4
77	39.0	E/B	1		X		60′	4′	0.5′	4.4
78	39.5	E/B	1			X	50′	4′	0.5′	3.7
79	39.6	E/B	1			X	50′	4′	0.5′	3.7
80	40.1	E/B	1		X	X	200′	4′	0.5′	29.6
81	40.6	E/B	1			X	100′	4′	0.5′	7.4
82	40.8	E/B	1			X	50′	4′	0.5′	3.7
83	41.5	E/B	1			X	100′	4′	0.5′	7.4
84	42.8	E/B	1			X	100′	4′	0.5′	7.4
85	42.9	E/B	1			X	50′	4′	0.5′	3.7
86	43.2	E/B	1		X	X	100′	4′	0.5′	14.8
87	43.8	E/B	1			X	50′	4′	0.5′	3.7
88	44.3	E/B	1			X	25′	4′	0.5′	1.9
89	45.0	E/B	1			X	50′	4′	0.5′	3.7
90	45.2	E/B	1			X	100′	4′	0.5′	7.4
91	48.7	E/B	1	X			50′	4′	0.5′	3.7
92	48.9	E/B	1	X	X	X	500′	4′	0.5′	111.1
93	49.2	E/B	1	X	X	X	1000′	4′	0.5′	222.2
94	49.5	E/B	1	X	X	X	300′	4′	0.5′	66.7
95	15.0	W/B	1			X	30′	4′	0.5′	2.2
96	16.4	W/B	1		X	X	150′	4′	0.5′	22.2
97	16.8	W/B	1		X	X	120′	4′	0.5′	17.8
98	17.0	W/B	1			X	60′	4′	0.5′	4.4
99	17.2	W/B	1			X	50′	4′	0.5′	3.7
100	18.8	W/B	1			X	50′	4′	0.5′	3.7
101	19.2	W/B	1		X		60′	4′	0.5′	4.4
102	19.3	W/B	1			X	30′	4′	0.5′	2.2
103	20.1	W/B	1			X	130′	4′	0.5′	9.6
104	20.70	W/B	1			X	100′	4′	0.5′	7.4
105	21.8	W/B	1			X	50′	4′	0.5′	3.7
106	22.6	W/B	1			X	150′	4′	0.5′	11.1
107	23.3	W/B	1		X		100′	4′	0.5′	7.4
108	23.8	W/B	1			X	75′	4′	0.5′	5.6
109	24.2	W/B	1			X	100′	4′	0.5′	7.4
110	24.7	W/B	1		X	X	150′	4′	0.5′	22.2
111	24.9	W/B	1		X	X	200′	4′	0.5′	29.6
112	25.7	W/B	1			X	150′	4′	0.5′	11.1
113	26.1	W/B	1			X	100′	4′	0.5′	7.4
114	26.5	W/B	1			X	150′	4′	0.5′	11.1
SUB-TOTAL										1030.7

(N) - NOT A SEPARATE PAY ITEM, FOR INFORMATION ONLY.

SUMMARY OF QUANTITIES

Q-2

STATE OF CALIFORNIA - DEPARTMENT OF TRANSPORTATION

Caltrans®

DESGIN

FUNCTIONAL SUPERVISOR: SERGIO E. AVILA

CALCULATED-DESIGNED BY: DANH NGUYEN

CHECKED BY: CRESENCIO GARCIA

REVISED BY

DATE REVISED

LAST REVISION 12-02-13

DATE PLOTTED => 13-DEC-2013

TIME PLOTTED => 10:51

Dist	COUNTY	ROUTE	POST MILES TOTAL PROJECT	SHEET No.	TOTAL SHEETS
08	SBd	38	15.0/49.5	16	50

12-2-13
REGISTERED CIVIL ENGINEER DATE

12-16-13
PLANS APPROVAL DATE

REGISTERED PROFESSIONAL ENGINEER CRESENCIO GARCIA No. 63721 Exp 9/30/14 CIVIL STATE OF CALIFORNIA

THE STATE OF CALIFORNIA OR ITS OFFICERS OR AGENTS SHALL NOT BE RESPONSIBLE FOR THE ACCURACY OR COMPLETENESS OF SCANNED COPIES OF THIS PLAN SHEET.

REPLACE ASPHALT CONCRETE SURFACING

DIGOUT NUMBER	PM	DIRECTION	LANE NUMBER	WHEEL TRACK			DIMENSION OF DIGOUT (N)			REPLACE AC SURFACING
				LEFT	CENTER	RIGHT	LENGTH	WIDTH	DEPTH	(CY)
115	26.7	W/B	1		X	X	200′	4′	0.5′	29.6
116	26.9	W/B	1			X	150′	4′	0.5′	11.1
117	28.2	W/B	1			X	75′	4′	0.5′	5.6
118	29.5	W/B	1			X	62′	4′	0.5′	4.6
119	29.8	W/B	1			X	76′	4′	0.5′	5.6
120	30.8	W/B	1			X	25′	4′	0.5′	1.9
121	32.13	W/B	1			X	106′	4′	0.5′	7.9
122	32.14	W/B	1			X	61′	4′	0.5′	4.5
123	32.35	W/B	1			X	80′	4′	0.5′	5.9
124	32.5	W/B	1			X	125′	4′	0.5′	9.3
125	32.75	W/B	1			X	160′	4′	0.5′	11.9
126	33.1	W/B	1			X	48′	4′	0.5′	3.6
127	36.9	W/B	1			X	25′	4′	0.5′	1.9
128	37.2	W/B	1			X	30′	4′	0.5′	2.2
129	39.9	W/B	1			X	100′	4′	0.5′	7.4
130	40.3	W/B	1			X	100′	4′	0.5′	7.4
131	41.3	W/B	1			X	50′	4′	0.5′	3.7
132	42.1	W/B	1			X	100′	4′	0.5′	7.4
133	43.1	W/B	1		X	X	200′	4′	0.5′	29.6
134	43.6	W/B	1			X	100′	4′	0.5′	7.4
135	44.0	W/B	1			X	50′	4′	0.5′	3.7
136	44.6	W/B	1			X	25′	4′	0.5′	1.9
137	45.6	W/B	1			X	75′	4′	0.5′	5.6
138	48.2	W/B	1	X	X	X	20′	4′	0.5′	4.4
139	48.5	W/B	1			X	50′	4′	0.5′	3.7
140	48.7	W/B	1			X	50′	4′	0.5′	3.7
141	48.8	W/B	1			X	50′	4′	0.5′	3.7
142	48.9	W/B	1			X	20′	4′	0.5′	1.5
143	49.0	W/B	1	X			50′	4′	0.5′	3.7
144	49.1	W/B	1			X	50′	4′	0.5′	3.7
145	49.4	W/B	1			X	40′	4′	0.5′	3.0
146	49.5	W/B	1	X	X	X	300′	4′	0.5′	66.7
SUB-TOTAL										273.8
TOTAL										2274.3

(N) - NOT A SEPARATE PAY ITEM, FOR INFORMATION ONLY.

SUMMARY OF QUANTITIES

Q-3

STATE OF CALIFORNIA - DEPARTMENT OF TRANSPORTATION
Caltrans®
DESGIN
FUNCTIONAL SUPERVISOR: SERGIO E. AVILA
CALCULATED-DESIGNED BY: DANH NGUYEN
CHECKED BY: CRESENCIO GARCIA
REVISED BY
DATE REVISED

LAST REVISION 12-02-13
DATE PLOTTED => 13-DEC-2013
TIME PLOTTED => 10:51

Dist	COUNTY	ROUTE	POST MILES TOTAL PROJECT	SHEET No.	TOTAL SHEETS
08	SBd.	38	15.0/49.5	17	50

REGISTERED CIVIL ENGINEER DATE 12-2-13

PLANS APPROVAL DATE 12-16-13

REGISTERED PROFESSIONAL ENGINEER CRESENCIO GARCIA No. 63721 Exp. 9/30/14 CIVIL STATE OF CALIFORNIA

THE STATE OF CALIFORNIA OR ITS OFFICERS OR AGENTS SHALL NOT BE RESPONSIBLE FOR THE ACCURACY OR COMPLETENESS OF SCANNED COPIES OF THIS PLAN SHEET.

NOTE:

1. EXACT LOCATIONS AND DIMENSIONS OF TURNOUTS WILL BE DETERMINED BY THE ENGINEER.

HMA (TYPE C) AND COLD PLANE FOR TURNOUTS

PM		DIRECTION	LENGTH	DIMENSION (N)			COLDPLANE AC Pvmt	TACK COAT	HMA (TYPE C)
				L1	L2	W			
FROM	TO	EB/WB	LF	LF	LF	LF	SQYD	TON	TON
15.32	15.35	EB	158	158	58	18	216	0.04	28.3
15.84	15.88	EB	211	211	111	18	322	0.05	42.1
16.08	16.28	EB	1056	1056	956	18	2012	0.34	262.9
16.85	16.89	EB	211	211	111	18	322	0.05	42.1
17.35	17.38	EB	158	158	58	18	216	0.04	28.3
18.84	18.91	EB	370	370	270	18	640	0.11	83.5
23.10	23.13	EB	158	158	58	18	216	0.04	28.3
24.20	24.22	EB	106	106	6	18	112	0.02	14.5
25.50	25.55	EB	264	264	164	18	428	0.07	55.9
27.09	27.18	EB	475	475	375	18	850	0.14	111.1
30.89	31.20	EB	1637	1637	1537	18	3174	0.53	414.7
31.60	31.75	EB	792	792	692	18	1484	0.25	193.9
32.48	32.53	EB	264	264	164	18	428	0.07	55.9
32.64	32.68	EB	211	211	111	18	322	0.05	42.1
33.70	33.78	EB	422	422	322	18	744	0.12	97.3
34.52	34.57	EB	264	264	164	18	428	0.07	55.9
36.13	36.17	EB	211	211	111	18	322	0.05	42.1
36.45	36.49	EB	211	211	111	18	322	0.05	42.1
36.33	36.37	EB	211	211	111	18	322	0.05	42.1
37.55	37.66	EB	581	581	481	18	1062	0.18	138.7
39.54	39.56	EB	106	106	6	18	112	0.02	14.5
39.69	39.73	EB	211	211	111	18	322	0.05	42.1
40.23	40.28	EB	264	264	164	18	428	0.07	55.9
40.82	40.89	EB	370	370	270	18	640	0.11	83.5
42.12	42.21	EB	475	475	375	18	850	0.14	111.1
42.90	42.96	EB	317	317	217	18	534	0.09	69.7
43.14	43.20	EB	317	317	217	18	534	0.09	69.7
43.60	43.62	EB	106	106	6	18	112	0.02	14.5
40.26	40.19	WB	370	370	270	18	640	0.11	83.5
39.08	39.03	WB	264	264	164	18	428	0.07	55.9
38.91	38.83	WB	422	422	322	18	744	0.12	97.3
38.78	38.74	WB	211	211	111	18	322	0.05	42.1
38.67	38.62	WB	264	264	164	18	428	0.07	55.9
37.44	37.38	WB	317	317	217	18	534	0.09	69.7
37.04	37.01	WB	158	158	58	18	216	0.04	28.3
36.84	36.79	WB	264	264	164	18	428	0.07	55.9
36.53	36.50	WB	158	158	58	18	216	0.04	28.3
36.45	36.39	WB	317	317	217	18	534	0.09	69.7
36.46	36.37	WB	475	475	375	18	850	0.14	111.1
36.09	36.06	WB	158	158	58	18	216	0.04	28.3
36.03	36.01	WB	106	106	6	18	112	0.02	14.5
35.80	35.76	WB	211	211	111	18	322	0.05	42.1
35.67	35.64	WB	158	158	58	18	216	0.04	28.3
35.26	35.23	WB	158	158	58	18	216	0.04	28.3
32.90	32.86	WB	211	211	111	18	322	0.05	42.1
31.86	31.83	WB	158	158	58	18	216	0.04	28.3
30.29	30.23	WB	317	317	217	18	534	0.09	69.7
30.11	30.08	WB	158	158	58	18	216	0.04	28.3
29.94	29.91	WB	158	158	58	18	216	0.04	28.3
29.42	29.33	WB	475	475	375	18	850	0.14	111.1
27.05	27.03	WB	106	106	6	18	112	0.02	14.5
26.33	26.27	WB	317	317	217	18	534	0.09	69.7
25.53	25.47	WB	317	317	217	18	534	0.09	69.7
25.02	24.97	WB	264	264	164	18	428	0.07	55.9
24.84	24.82	WB	106	106	6	18	112	0.02	14.5
SUB-TOTAL							27970	4.68	3654.1

(N) - NOT A SEPARATE PAY ITEM, FOR INFORMATION ONLY.

HMA (TYPE C) AND COLD PLANE FOR TURNOUTS

PM		DIRECTION	LENGTH	DIMENSION (N)			COLDPLANE AC Pvmt	TACK COAT	HMA (TYPE C)
				L1	L2	W			
FROM	TO	EB/WB	LF	LF	LF	LF	SQYD	TON	TON
24.68	24.64	WB	211	211	111	18	322	0.05	42.1
24.00	23.96	WB	211	211	111	18	322	0.05	42.1
23.86	23.84	WB	106	106	6	18	112	0.02	14.5
23.46	23.42	WB	211	211	111	18	322	0.05	42.1
23.35	23.32	WB	158	158	58	18	216	0.04	28.3
23.26	23.20	WB	317	317	217	18	534	0.09	69.7
22.98	22.93	WB	264	264	164	18	428	0.07	55.9
22.75	22.71	WB	211	211	111	18	322	0.05	42.1
22.66	22.63	WB	158	158	58	18	216	0.04	28.3
22.51	22.47	WB	211	211	111	18	322	0.05	42.1
22.19	22.17	WB	106	106	6	18	112	0.02	14.5
21.91	21.88	WB	158	158	58	18	216	0.04	28.3
21.75	21.71	WB	211	211	111	18	322	0.05	42.1
21.47	21.41	WB	317	317	217	18	534	0.09	69.7
21.19	21.15	WB	211	211	111	18	322	0.05	42.1
21.03	20.97	WB	317	317	217	18	534	0.09	69.7
20.79	20.77	WB	106	106	6	18	112	0.02	14.5
20.49	20.39	WB	528	528	428	18	956	0.16	124.9
20.10	20.06	WB	211	211	111	18	322	0.05	42.1
19.31	19.28	WB	158	158	58	18	216	0.04	28.3
18.58	18.56	WB	106	106	6	18	112	0.02	14.5
18.00	17.80	WB	1056	1056	956	18	2012	0.34	262.9
17.80	17.77	WB	158	158	58	18	216	0.04	28.3
17.33	17.31	WB	106	106	6	18	112	0.02	14.5
17.13	17.05	WB	422	422	322	18	744	0.12	97.3
16.75	16.73	WB	106	106	6	18	112	0.02	14.5
16.53	16.49	WB	211	211	111	18	322	0.05	42.1
16.43	16.41	WB	106	106	6	18	112	0.02	14.5
16.35	16.33	WB	106	106	6	18	112	0.02	14.5
15.69	15.65	WB	211	211	111	18	322	0.05	42.1
SUB-TOTAL							10938	1.82	1428.6
TOTAL							* 38908	* 6.50	* 5082.7

(N) NOT A SEPARATE PAY ITEM, FOR INFORMATION ONLY.
* QUANTITY INCLUDED IN ROADWAY QUANTITIES.

SUMMARY OF QUANTITIES

Q-4

STATE OF CALIFORNIA - DEPARTMENT OF TRANSPORTATION
Caltrans DESGIN
FUNCTIONAL SUPERVISOR SERGIO E. AVILA
CALCULATED-DESIGNED BY EVA MARISCAL
CHECKED BY CRESENCIO GARCIA
REVISED BY
DATE REVISED

LAST REVISION 12-02-13
DATE PLOTTED => 13-DEC-2013
TIME PLOTTED => 10:51

Dist	COUNTY	ROUTE	POST MILES TOTAL PROJECT	SHEET No.	TOTAL SHEETS
08	SBd	38	15.0/49.5	18	50

REGISTERED CIVIL ENGINEER 12-2-13 DATE

12-16-13
PLANS APPROVAL DATE

REGISTERED PROFESSIONAL ENGINEER CRESENCIO GARCIA No. 63721 Exp 9/30/14 CIVIL STATE OF CALIFORNIA

THE STATE OF CALIFORNIA OR ITS OFFICERS OR AGENTS SHALL NOT BE RESPONSIBLE FOR THE ACCURACY OR COMPLETENESS OF SCANNED COPIES OF THIS PLAN SHEET.

NOTES:

1. EXACT LOCATIONS AND DIMENSIONS OF SAFETY EDGE INSTALLATION WILL BE DETERMINED BY THE ENGINEER.

ROADWAY QUANTITIES

PM		DIRECTION	COLD PLANE AC PVMT	HMA (TYPE C)	TACK COAT	CENTERLINE RUMBLE STRIPS (GROUND - IN INDENTATIONS)
FROM	TO	EB/WB	SQYD	TON	TON	Sta
15.0	32.9	EB	147019	19210.4	24.5	945.12
32.9	33.4	EB	7627	996.6	1.3	26.40
33.4	36.1	EB	22176	2897.7	3.7	142.56
36.1	36.4	EB	4576	597.9	0.8	15.84
36.4	38.4	EB	16427	2146.4	2.7	105.6
38.4	38.5	EB	1525	199.3	0.3	5.28
38.5	39.2	EB	5749	751.2	1.0	36.96
39.2	39.4	EB	3051	398.6	0.5	10.56
39.4	47.1	EB	63243	8263.7	10.5	406.56
47.1	47.2	EB	1525	199.3	0.3	5.28
47.2	48.3	EB	9035	1180.5	1.5	58.08
48.3	48.4	EB	1525	199.3	0.3	5.28
48.4	48.7	EB	2464	322.0	0.4	15.84
48.7	49.2	EB	7627	996.6	1.3	26.40
49.2	49.5	EB	2464	322.0	0.4	15.84
15.0	38.4	WB	192192	25113.1	32.0	
38.4	38.5	WB	1525	199.3	0.3	
38.5	49.5	WB	90347	11805.3	15.1	
SUB-TOTAL			580097	75799.2	96.9	1821.60
TURNOUTS			38908	5082.7	6.5	0
PROJECT TOTAL			619005	80881.9	103.4	1821.60

SAFETY EDGE & SHOULDER BACKING

PM		DIRECTION	SAFETY EDGE (N)		SHOULDER BACKING
FROM	TO	EB/WB	LF	TON	TON
45.876	46.307	EB	2275.7	5.8	19.7
46.417	47.268	EB	4493.3	11.4	38.9
47.378	47.818	EB	2323.2	5.9	20.1
48.389	48.419	EB	158.4	0.4	1.4
48.479	48.509	EB	158.4	0.4	1.4
48.549	48.699	EB	792.0	2.0	6.9
49.210	49.410	EB	1056.0	2.7	9.1
49.080	49.150	WB	369.6	0.9	3.2
48.781	49.021	WB	1267.2	3.2	11.0
48.451	48.741	WB	1531.2	3.9	13.3
48.291	48.351	WB	316.8	0.8	2.7
47.422	47.632	WB	1108.8	2.8	9.6
46.823	47.003	WB	950.4	2.4	8.2
45.914	46.303	WB	2053.9	5.2	17.8
TOTAL			18855	47.8	163.3

(N) - NOT A SEPARATE PAY ITEM, FOR INFORMATION ONLY.

SUMMARY OF QUANTITIES

Q-5

STATE OF CALIFORNIA - DEPARTMENT OF TRANSPORTATION
Caltrans
DESGIN
FUNCTIONAL SUPERVISOR: SERGIO E. AVILA
CALCULATED-DESIGNED BY: EVA MARISCAL
CHECKED BY: CRESENCIO GARCIA
REVISED BY
DATE REVISED

LAST REVISION 12-02-13
DATE PLOTTED => 13-DEC-2013
TIME PLOTTED => 10:51

Dist	COUNTY	ROUTE	POST MILES TOTAL PROJECT	SHEET No.	TOTAL SHEETS
08	SBd	38	15.0/49.5	19	50

REGISTERED CIVIL ENGINEER 12-2-13 DATE

12-16-13
PLANS APPROVAL DATE

REGISTERED PROFESSIONAL ENGINEER CRESENCIO GARCIA No. 63721 Exp. 9/30/14 CIVIL STATE OF CALIFORNIA

THE STATE OF CALIFORNIA OR ITS OFFICERS OR AGENTS SHALL NOT BE RESPONSIBLE FOR THE ACCURACY OR COMPLETENESS OF SCANNED COPIES OF THIS PLAN SHEET.

NOTES:

1. VEGETATION CONTROL WIDTH MAY BE VARIED BY THE ENGINEER TO SUIT CONDITIONS ENCOUNTERED IN THE FIELD, REFER TO REVISED STANDARD PLANS RSP A77N2, A77N3, A77N5, A77N6, & A77N8 .
2. EXACT LOCATIONS AND DIMENSIONS OF GUARDRAIL INSTALLATION WILL BE DETERMINED BY THE ENGINEER, USE MGS TRANSITION TO EXISTING MBGR AT EACH CONNECTION, REFER TO RSP A77U5.

ABBREVIATIONS:

AITS- ALTERNATIVE IN-LINE TERMINAL SYSTEM

AFTS- ALTERNATIVE FLARED TERMINAL SYSTEM

MIDWEST GUARDRAIL SYSTEM

LOCATION				AITS	AFTS	No. OF BURIED POST END ANCHOR (N)	MGS (STEEL POST) (7' POST)	REMOVE GUARDRAIL	TREATED WOOD WASTE	VEGETATION CONTROL (MINOR CONCRETE)	REFERENCES
No.	PM	DIRECTION	DESCRIPTION	EA	EA	EA	LF	LF	LB	AREA SQYD	STANDARD LAYOUT OR CONST DETAIL
1	22.493-22.534	EB	INSTALL MGS WITH BURIED POST END ANCHOR AT THE APPROACH END AND AFTS AT THE DEPARTURE END (CREEKSIDE). MGS IS AT 200' CURVE RADIUS Approx.		1	1	137.5			63	TYPE 11G
2	Approx 23.75	EB	BEGIN MGS INSTALLATION AT THE EAST END WITH AITS (NEXT TO THE SNOW POLE BY THE SNOW DISCHARGE OUTLET), AND EXTEND IT TO THE WEST ALONG THE TURNOUT 87.5' (CREEKSIDE), AND END IT USING AN AFTS.	1	1		87.5			63	DETAIL A
3	Approx 24.348-24.383	EB	INSTALL MGS WITH BURIED POST END ANCHOR AT THE APPROACH END AND AFTS AT THE DEPARTURE END, BOTH ENDS AT APPROX 25' FROM ETW (CREEKSIDE, TURNOUT TO TURNOUT).		1	1	112.5			54	DETAIL B
4	24.756-24.778	EB	INSTALL MGS WITH AFTS AT THE APPROACH END AND END IT WITH BURIED POST END ANCHOR AT THE DEPARTURE END (CREEKSIDE).		1	1	75.0			41	TYPE 11G
5	37.479-37.519	EB	INSTALL MGS WHERE THE DIKE ENDS WITH AITS, AND CONNECT TO EXISTING MBGR (REMOVE EXISTING AITS).	1			162.5	50.0	612	77	TYPE 11A
6	41.307-41.367	EB	INSTALL MGS WITH AITS AT BOTH ENDS (MGS ENDS JUST BEFORE AC DIKE BEGINS).	2			212.5			113	TYPE 11D
7	43.263-43.289	EB	BEGIN MGS INSTALLATION WHERE THE DIKE ENDS WITH AITS, AND CONNECT TO EXISTING MBGR (REMOVE EXISTING AFTS).	1			87.5	37.5	476	50	TYPE 11A
8	Approx PM 17.59	WB	35' AWAY (TOWARDS WESTBOUND) FROM THE 17.59 PM MARKER, BEGIN MGS INSTALLATION WITH AITS AT THE DEPARTURE END, AND EXTEND ALL AROUND THE TURNOUT ENDING IT WITH BURIED POST END ANCHOR AT THE APPROACH END.	1		1	300.0			126	TYPE 11K
9	20.662-20.719	WB	INSTALL MGS AT THE TURNOUT 80' EB FROM EXISTING MBGR WITH BURIED POST END ANCHOR AND AITS AT THE NEXT TURNOUT.	1		1	250.0			108	TYPE 11I
10	21.31-21.47	WB	BEGIN MGS INSTALLATION AT THE TURNOUT USING BURIED POST END ANCHOR AND END JUST BEFORE THE DOWNDRAIN INLET USING AITS.	1		1	812.5			311	TYPE 11I
11	21.66-21.71	WB	BEGIN MGS INSTALLATION USING A BURIED POST END ANCHOR AND PLACE IT AFTER THE DOWNDRAIN INLET WHERE AC BERM ENDS AND END IT AT THE TURNOUT WITH A BURIED POST END ANCHOR.			2	187.5			68	TYPE 11F
12	Approx. 22.33	WB	AT THE EXISTING APPROACH END, REMOVE 12.5' GUARDRAIL AND EXTEND 50' OF MGS, AND END IT WITH AITS	1			50.0	12.5	204	36	DETAIL E
13	Approx 22.35	WB	AT THE EXISTING DEPARTURE END, REMOVE 12.5' GUARDRAIL, AND EXTEND 37.5' OF MGS AROUND TURNOUT. END IT WITH A BURIED POST END ANCHOR.			1	37.5	12.5	204	14	DETAIL F
14	Approx. 23.1	WB	AT THE EXISTING APPROACH END, REMOVE 12.5' GUARDRAIL AND EXTEND 75' OF MGS, AND END IT WITH AITS	1			75.0	12.5	204	45	DETAIL E
15	23.20-23.30	WB	INSTALL MGS FROM TURNOUT TO TURNOUT USING BURIED POST END ANCHORS AT BOTH ENDS.			2	462.5			167	TYPE 11F
16	23.48-23.71	WB	MGS WILL BE INSTALLED TO CLOSE THE EXISTING GAP BETWEEN TWO SECTIONS OF MBGR. REMOVE EXISTING AITS AT Approx PM 23.47 AND REMOVE EXISTING BURIED POST END ANCHOR AT Approx 23.71. BEGIN MGS INSTALLATION WHERE AITS WAS REMOVED AND EXTEND TO CONNECT WITH MBGR WHERE THE BURIED POST END ANCHOR WAS REMOVED AT THE OTHER END. USE MGS TRANSITION TO MBGR AT BOTH CONNECTIONS (RSP A77U5)				1275.0	75.0	883	460	DETAIL C
17	24.333-24.390	WB	BEGIN MGS USING AITS AT THE TURNOUT AND END IT BY USING ANOTHER AITS AT THE NEXT TURNOUT, BOTH AITS ENDS SHALL BE Approx 25' AWAY FROM ETW. MGS CURVATURE RADIUS AT THE APPROACH END IS Approx 50'	2			250.0			126	DETAIL D
18	26.614-26.652	WB	INSTALL MGS WITH AITS AT BOTH ENDS (LOCATION NEAR HATHAWAY BRIDGE).	2			100.0			72	TYPE 11D
19	29.423-29.506	WB	INSTALL MGS WITH AITS AT BOTH ENDS.	2			337.5			158	TYPE 11D
20	29.675-29.710	WB	REMOVE EXISTING AITS AND AND BEGIN MGS INSTALLATION BY CONNECTING TO EXISTING MBGR. END MGS WITH AITS.	1			137.5	50.0	612	68	TYPE 11A
21	30.116-30.166	WB	AT THE TURNOUT, BEGIN MGS WITH AITS, AND END IT USING ANOTHER AITS AT THE NEXT TURNOUT BOTH AITS ENDS SHALL BE Approx 25' AWAY FROM ETW.	2			187.5			104	DETAIL D
SUB TOTAL				19	4		5337.5	250.0	3195	2324	

(N) - NOT A SEPARATE PAY ITEM, FOR INFORMATION ONLY.

SUMMARY OF QUANTITIES

Q-6

STATE OF CALIFORNIA - DEPARTMENT OF TRANSPORTATION

Caltrans

DESGIN

FUNCTIONAL SUPERVISOR: SERGIO E. AVILA

CALCULATED-DESIGNED BY: CRESENCIO GARCIA

CHECKED BY: SERGIO E. AVILA

REVISED BY

DATE REVISED

LAST REVISION 12-02-13

DATE PLOTTED => 13-DEC-2013
TIME PLOTTED => 10:51

Dist	COUNTY	ROUTE	POST MILES TOTAL PROJECT	SHEET No.	TOTAL SHEETS
08	SBd	38	15.0/49.5	20	50

12-2-13
REGISTERED CIVIL ENGINEER DATE

12-16-13
PLANS APPROVAL DATE

REGISTERED PROFESSIONAL ENGINEER
CRESENCIO GARCIA
No. 63721
Exp. 9/30/14
CIVIL
STATE OF CALIFORNIA

THE STATE OF CALIFORNIA OR ITS OFFICERS OR AGENTS SHALL NOT BE RESPONSIBLE FOR THE ACCURACY OR COMPLETENESS OF SCANNED COPIES OF THIS PLAN SHEET.

MIDWEST GUARDRAIL SYSTEM

LOCATION				AITS	AFTS	No. OF BURIED POST END ANCHOR (N)	MGS (STEEL POST) (7' POST)	REMOVE GUARDRAIL	TREATED WOOD WASTE	VEGETATION CONTROL (MINOR CONCRETE)	REFERENCES
No.	PM	DIRECTION	DESCRIPTION	EA	EA	EA	LF	LF	LB	SQYD	STANDARD LAYOUT OR Const DETAIL
22	30.163 TO 30.217	WB	BEGIN MGS INSTALLATION WITH AITS, AND END IT WITH AITS, FROM TURNOUT TO TURNOUT. BOTH AITS SHALL BE Approx 15' AWAY FROM ETW.	2			287.5			140	TYPE 11D
23	30.244 TO 30.301	WB	AT THE TURNOUT, BEGIN MGS INSTALLATION USING AN AITS, 25' AWAY FROM ETW, AT THE APPROACH END, AND END IT WITH AITS AT THE NEXT TURNOUT, Approx 25' AWAY FROM ETW, AT THE DEPARTURE END.	2			262.5			131	DETAIL D
24	39.10 TO 39.145	WB	AT THE TURNOUT SIGN (TURNOUT 1/4 MILE), BEGIN MGS WITH AITS, APPROACH END, WHERE THE DIKE ENDS, AND END IT WITH AFTS AT THE NEXT TURNOUT, DEPARTURE END.	1	1		162.5			90	TYPE 11J
25	40.36 TO 40.398	WB	BEGIN MGS INSTALLATION WITH BURIED POST END ANCHOR AT THE APPROACH END, AND END IT WITH BURIED POST END ANCHOR AT THE DEPARTURE END.			2	250.0			90	TYPE 11F
SUB TOTAL				5	1		962.5	0.0	0.0	451	
TOTAL				24	5		6300.0	250.0	3195	2775.0	

(N) NOT A SEPARATE PAY ITEM, FOR INFORMATION ONLY.

SUMMARY OF QUANTITIES
Q-7

STATE OF CALIFORNIA - DEPARTMENT OF TRANSPORTATION
Caltrans
DESGIN
FUNCTIONAL SUPERVISOR: SERGIO E. AVILA
CALCULATED-DESIGNED BY: CRESENCIO GARCIA
CHECKED BY: SERGIO E. AVILA
REVISED BY
DATE REVISED

LAST REVISION 12-02-13
DATE PLOTTED => 13-DEC-2013
TIME PLOTTED => 10:51

Dist	COUNTY	ROUTE	POST MILES TOTAL PROJECT	SHEET No.	TOTAL SHEETS
08	SBd	38	15.0/49.5	21	50

REGISTERED ELECTRICAL ENGINEER 12-2-13 DATE

PLANS APPROVAL DATE 12-16-13

REGISTERED PROFESSIONAL ENGINEER FERDINAND DE LA CRUZ No. E 17215 Exp. 6-30-14 ELECTRICAL STATE OF CALIFORNIA

THE STATE OF CALIFORNIA OR ITS OFFICERS OR AGENTS SHALL NOT BE RESPONSIBLE FOR THE ACCURACY OR COMPLETENESS OF SCANNED COPIES OF THIS PLAN SHEET.

NOTES:

1. THE CONTRACTOR SHALL CONTACT THE ENGINEER THREE WORKING DAYS PRIOR TO INSTALLING DETECTOR LOOPS
2. EXISTING INDUCTIVE LOOP DETECTORS SHOWN TO BE REPLACED SHALL BE AB

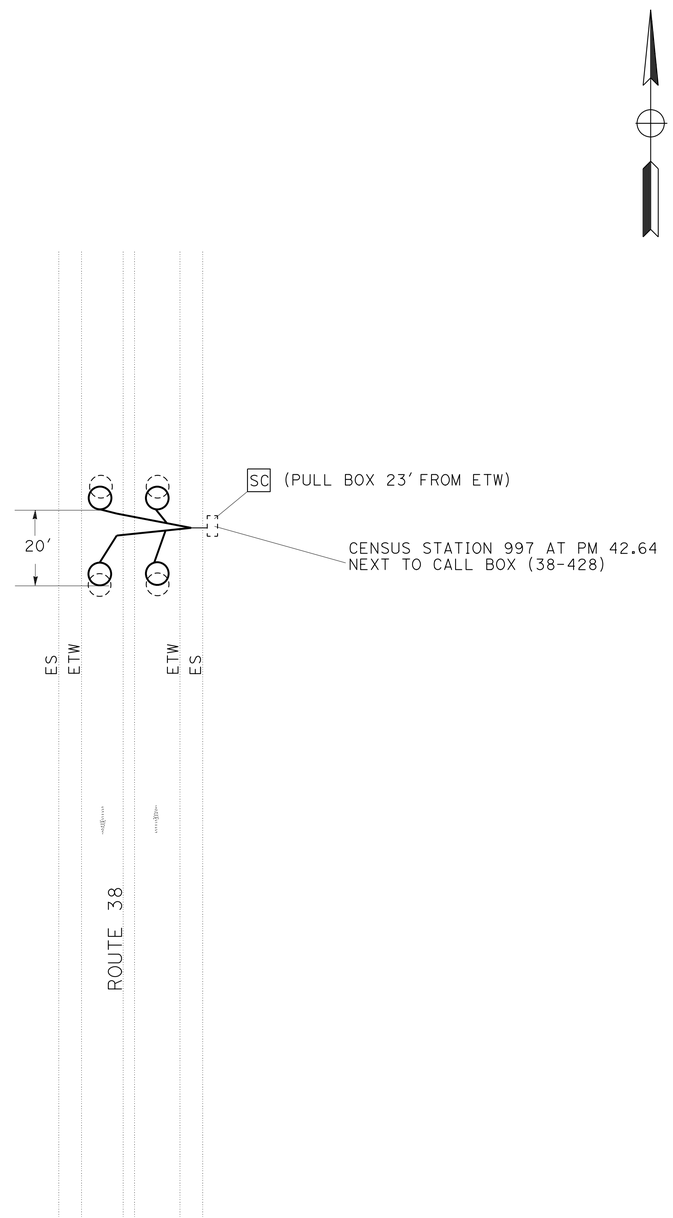

MODIFY TRAFFIC MONITORING STATION (COUNT)

NO SCALE

E-1

APPROVED FOR ELECTRICAL WORK ONLY

STATE OF CALIFORNIA - DEPARTMENT OF TRANSPORTATION

ELECTRICAL DESIGN B

FUNCTIONAL SUPERVISOR: FERDINAND DE LA CRUZ

CALCULATED-DESIGNED BY: LUIS PENALOZA, JR.

CHECKED BY: FERDINAND DE LA CRUZ

REVISED BY: LPJ

DATE REVISED: 02-13-13

LAST REVISION 12-02-13 | DATE PLOTTED => 13-DEC-2013 | TIME PLOTTED => 10:51

Dist	COUNTY	ROUTE	POST MILES TOTAL PROJECT	SHEET No.	TOTAL SHEETS
08	SBd	38	15.0/49.5	22	50

REGISTERED ELECTRICAL ENGINEER 12-2-13 DATE

PLANS APPROVAL DATE 12-16-13

REGISTERED PROFESSIONAL ENGINEER FERDINAND DE LA CRUZ No. E 17215 Exp. 6-30-14 ELECTRICAL STATE OF CALIFORNIA

THE STATE OF CALIFORNIA OR ITS OFFICERS OR AGENTS SHALL NOT BE RESPONSIBLE FOR THE ACCURACY OR COMPLETENESS OF SCANNED COPIES OF THIS PLAN SHEET.

ABBREVIATIONS; THIS SHEET ONLY

epc - EMERGENCY PREEMPTION CABLE

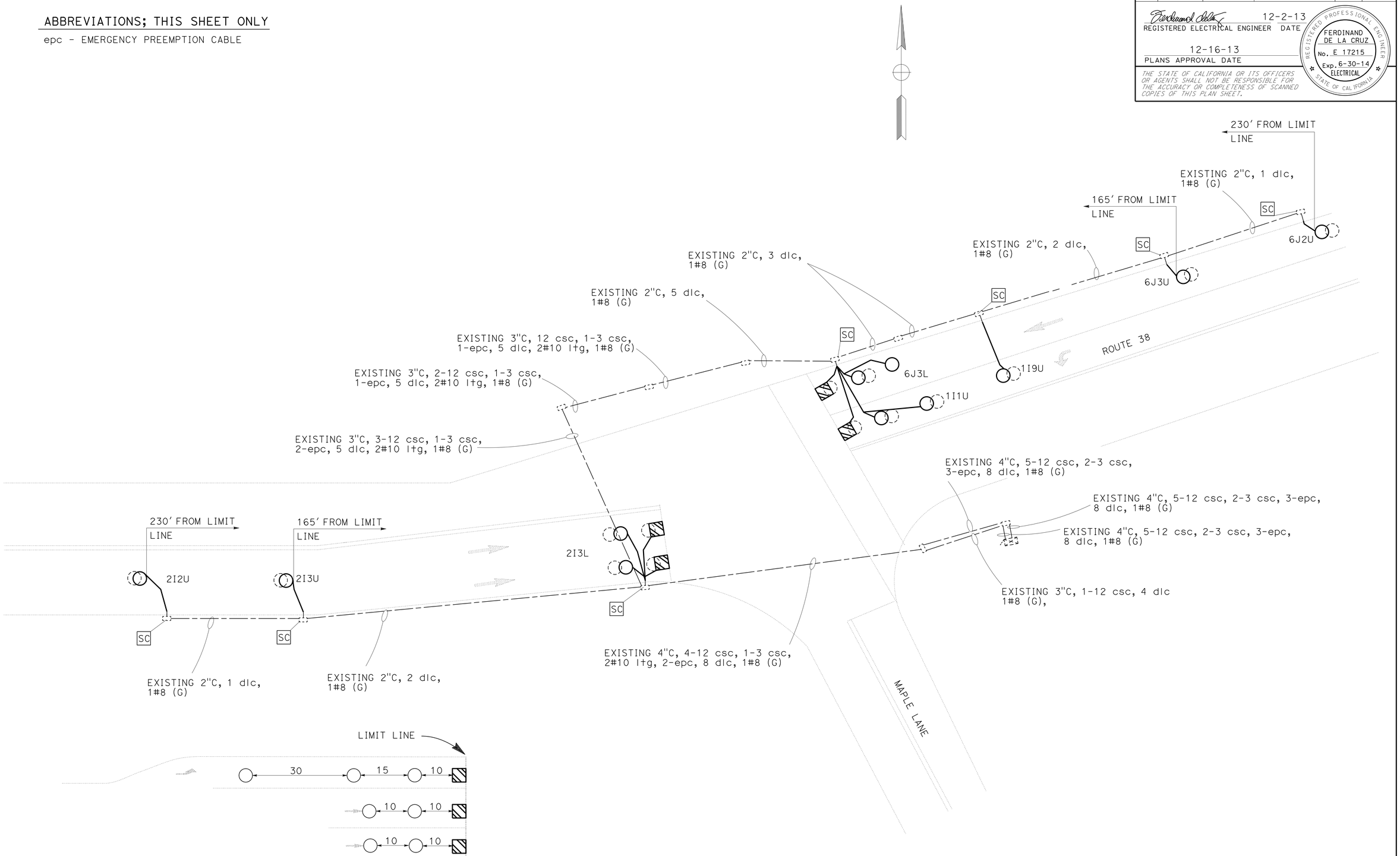

TYPICAL LOOP DETECTOR SETBACKS

MODIFY SIGNAL AND LIGHTING

NO SCALE

E-2

APPROVED FOR ELECTRICAL WORK ONLY

STATE OF CALIFORNIA - DEPARTMENT OF TRANSPORTATION

Caltrans ELECTRICAL DESIGN B

FUNCTIONAL SUPERVISOR: FERDINAND DE LA CRUZ

CALCULATED-DESIGNED BY: LUIS PENALOZA, JR.

CHECKED BY: FERDINAND DE LA CRUZ

REVISED BY: LPJ

DATE REVISED: 02-13-13

LAST REVISION 12-02-13

DATE PLOTTED => 13-DEC-2013

TIME PLOTTED => 10:51

Dist	COUNTY	ROUTE	POST MILES TOTAL PROJECT	SHEET No.	TOTAL SHEETS
08	SBd	38	15.0/49.5	23	50

12-2-13
REGISTERED ELECTRICAL ENGINEER DATE

12-16-13
PLANS APPROVAL DATE

REGISTERED PROFESSIONAL ENGINEER
FERDINAND DE LA CRUZ
No. E 17215
Exp. 6-30-14
ELECTRICAL
STATE OF CALIFORNIA

THE STATE OF CALIFORNIA OR ITS OFFICERS OR AGENTS SHALL NOT BE RESPONSIBLE FOR THE ACCURACY OR COMPLETENESS OF SCANNED COPIES OF THIS PLAN SHEET.

NOTE:

1. THE QUANTITIES ON THIS SHEET ARE APPROXIMATE MEASUREMENTS.

MODIFY TRAFFIC MONITORING STATION (COUNT)

SHEET No.	(N) INDUCTIVE LOOPS TYPE E
	EA
E-1	4

(N) = NOT A SEPARATE PAY ITEM, FOR INFORMATION ONLY.

MODIFY SIGNAL AND LIGHTING

SHEET No.	(N) INDUCTIVE LOOPS TYPE E	(N) INDUCTIVE LOOPS TYPE D
	EA	EA
E-2	11	4

(N) = NOT A SEPARATE PAY ITEM, FOR INFORMATION ONLY.

ELECTRICAL QUANTITIES
E-3

STATE OF CALIFORNIA - DEPARTMENT OF TRANSPORTATION
Caltrans® ELECTRICAL DESIGN B

FUNCTIONAL SUPERVISOR: FERDINAND DE LA CRUZ
CALCULATED-DESIGNED BY: LUIS PENALOZA, JR.
CHECKED BY: FERDINAND DE LA CRUZ
REVISED BY: LPJ
DATE REVISED: 02-13-13

LAST REVISION 12-02-13
DATE PLOTTED => 13-DEC-2013
TIME PLOTTED => 10:51

M

Maint	MAINTENANCE
Max	MAXIMUM
MB	METAL BEAM
MBB	METAL BEAM BARRIER
MBGR	METAL BEAM GUARD RAILING
Med	MEDIAN
MGS	MIDWEST GUARDRAIL SYSTEM
MH	MANHOLE
Min	MINIMUM
Misc	MISCELLANEOUS
Misc I & S	MISCELLANEOUS IRON AND STEEL
Mkr	MARKER
Mod	MODIFIED,
	MODIFY
Mon	MONUMENT
MP	METAL PLATE
MPGR	METAL PLATE GUARD RAILING
MR	MOVEMENT RATING
MSE	MECHANICALLY STABILIZED EMBANKMENT
Mt	MOUNTAIN, MOUNT
Mtl	MATERIAL
MVP	MAINTENANCE VEHICLE PULLOUT

N

N	NORTH
NB	NORTHBOUND
No.	NUMBER (MUST HAVE PERIOD)
Nos.	NUMBERS (MUST HAVE PERIOD)
NPS	NOMINAL PIPE SIZE
NS	NEAR SIDE
NSP	NEW STANDARD PLAN
NTS	NOT TO SCALE

O

Oblr	OBLITERATE
OC	OVERCROSSING
OD	OUTSIDE DIAMETER
OF	OUTSIDE FACE
OG	ORIGINAL GROUND
OGAC	OPEN GRADED ASPHALT CONCRETE
OGFC	OPEN GRADED FRICTION COURSE
OH	OVERHEAD
OHWM	ORDINARY HIGH WATER MARK
O-O	OUT TO OUT
Opp	OPPOSITE
OSD	OVERSIDE DRAIN

P

P	PAGE
PAP	PERFORATED ALUMINUM PIPE
PB	PULL BOX
PC	POINT OF CURVATURE,
	PRECAST
PCC	POINT OF COMPOUND CURVE,
	PORTLAND CEMENT CONCRETE
PCMS	PORTABLE CHANGEABLE MESSAGE SIGN
PCP	PERFORATED CONCRETE PIPE,
	PRESTRESSED CONCRETE PIPE
PCVC	POINT OF COMPOUND VERTICAL CURVE
PEC	PERMIT TO ENTER AND CONSTRUCT
Ped	PEDESTRIAN
Ped OC	PEDESTRIAN OVERCROSSING
Ped UC	PEDESTRIAN UNDERCROSSING
Perm Mtl	PERMEABLE MATERIAL

P continued

PG	PROFILE GRADE
PI	POINT OF INTERSECTION
PJP	PARTIAL JOINT PENETRATION
Pkwy	PARKWAY
ℙ,PL	PLATE
P/L	PROPERTY LINE
PM	POST MILE,
	TIME FROM NOON TO MIDNIGHT
PN	PAVING NOTCH
POC	POINT OF HORIZONTAL CURVE
POT	POINT OF TANGENT
POVC	POINT OF VERTICAL CURVE
PP	PIPE PILE,
	PLASTIC PIPE,
	POWER POLE
PPL	PREFORMED PERMEABLE LINER
PPP	PERFORATED PLASTIC PIPE
PRC	POINT OF REVERSE CURVE
PRF	PAVEMENT REINFORCING FABRIC
PRVC	POINT OF REVERSE VERTICAL CURVE
PS&E	PLANS, SPECIFICATIONS AND ESTIMATES
PS, P/S	PRESTRESSED
PSP	PERFORATED STEEL PIPE
PT	POINT OF TANGENCY
PVC	POLYVINYL CHLORIDE
Pvmt	PAVEMENT

Q

Qty	QUANTITY

R

R	RADIUS
R & D	REMOVE AND DISPOSE
R & S	REMOVE AND SALVAGE
R/C	RATE OF CHANGE
RCA	REINFORCED CONCRETE ARCH
RCB	REINFORCED CONCRETE BOX
RCP	REINFORCED CONCRETE PIPE
RCPA	REINFORCED CONCRETE PIPE ARCH
Rd	ROAD
Reinf	REINFORCED,
	REINFORCEMENT,
	REINFORCING
Rel	RELOCATE
Repl	REPLACEMENT
Ret	RETAINING
Rev	REVISED, REVISION
Rdwy	ROADWAY
RHMA	RUBBERIZED HOT MIX ASPHALT
Riv	RIVER
RM	ROAD-MIXED
RP	RADIUS POINT,
	REFERENCE POINT
RR	RAILROAD
RSP	ROCK SLOPE PROTECTION,
	REVISED STANDARD PLAN
Rt	RIGHT
Rte	ROUTE
RW	REDWOOD,
	RETAINING WALL
R/W	RIGHT OF WAY
Rwy	RAILWAY

S

S	SOUTH,
	SUPPLEMENT
SAE	STRUCTURE APPROACH EMBANKMENT
Salv	SALVAGE
SAPP	STRUCTURAL ALUMINUM PLATE PIPE
SB	SOUTHBOUND
SC	SAND CUSHION
SCSP	SLOTTED CORRUGATED STEEL PIPE
SD	STORM DRAIN
Sec	SECOND,
	SECTION
Sep	SEPARATION
SG	SUBGRADE
Shld	SHOULDER
Sht	SHEET
Sim	SIMILAR
℄	STATION LINE
SM	SELECTED MATERIAL
Spec	SPECIAL,
	SPECIFICATIONS
SPP	SLOTTED PLASTIC PIPE
SS	SLOPE STAKE
SSBM	STRAP AND SADDLE BRACKET METHOD
SSD	STRUCTURAL SECTION DRAIN
SSPA	STRUCTURAL STEEL PLATE ARCH
SSPP	STRUCTURAL STEEL PLATE PIPE
SSPPA	STRUCTURAL STEEL PLATE PIPE ARCH
SSRP	STEEL SPIRAL RIB PIPE
St	STREET
Sta	STATION
STBB	SINGLE THRIE BEAM BARRIER
Std	STANDARD
Str	STRUCTURE
Surf	SURFACING
SW	SIDEWALK,
	SOUND WALL
Swr	SEWER
Sym	SYMMETRICAL
S4S	SURFACE 4 SIDES

T

T	SEMI-TANGENT
Tan	TANGENT
TBB	THRIE BEAM BARRIER
Tbr	TIMBER
TC	TOP OF CURB
TCB	TRAFFIC CONTROL BOX
TCE	TEMPORARY CONSTRUCTION EASEMENT
Tel	TELEPHONE
Temp	TEMPORARY
TG	TOP OF GRADE
Tot	TOTAL
TP	TELEPHONE POLE
TPB	TREATED PERMEABLE BASE
TPM	TREATED PERMEABLE MATERIAL
Trans	TRANSITION

T continued

TS	TRANSVERSE,
	TRAFFIC SIGNAL,
	TUBULAR STEEL
Typ	TYPICAL

U

UC	UNDERCROSSING
UD	UNDERDRAIN
UG	UNDERGROUND
UON	UNLESS OTHERWISE NOTED
UP	UNDERPASS

V

V	VALVE,
	DESIGN SPEED
Var	VARIABLE,
	VARIES
VC	VERTICAL CURVE
VCP	VITRIFIED CLAY PIPE
Vert	VERTICAL
Via	VIADUCT
Vol	VOLUME

W

W	WEST,
	WIDTH
WB	WESTBOUND
WH	WEEP HOLE
WM	WIRE MESH
WS	WATER SURFACE
WSP	WELDED STEEL PIPE
Wt	WEIGHT
WV	WATER VALVE
WW	WINGWALL
WWLOL	WINGWALL LAYOUT LINE

X

X Sec	CROSS SECTION
Xing	CROSSING

Y

Yr	YEAR
Yrs	YEARS

Dist	COUNTY	ROUTE	POST MILES TOTAL PROJECT	SHEET No.	TOTAL SHEETS
08	SBd	38	15.0/49.5	24	50

Grace M. Tsushima
REGISTERED CIVIL ENGINEER

July 19, 2013
PLANS APPROVAL DATE

REGISTERED PROFESSIONAL ENGINEER
Grace M. Tsushima
No. C49814
Exp. 9-30-14
CIVIL
STATE OF CALIFORNIA

THE STATE OF CALIFORNIA OR ITS OFFICERS OR AGENTS SHALL NOT BE RESPONSIBLE FOR THE ACCURACY OR COMPLETENESS OF SCANNED COPIES OF THIS PLAN SHEET.

TO ACCOMPANY PLANS DATED 12-16-13

UNIT OF MEASUREMENT SYMBOLS:

Some of the symbols used in the project plan quantity tables and in the Bid Item List are:

TABLE A

SYMBOL USED	DEFINITIONS
ACRE	ACRE
CF	CUBIC FOOT
CY	CUBIC YARD
EA	EACH
GAL	GALLON
LB	POUND
LF	LINEAR FOOT
SQFT	SQUARE FOOT
SQYD	SQUARE YARD
STA	100 FEET
TAB	TABLET
TON	2,000 POUNDS

Some of the symbols used in the plans other than in the project plan quantity tables are:

TABLE B

SYMBOL USED	DEFINITIONS
ksi	KIPS PER SQUARE INCH
ksf	KIPS PER SQUARE FOOT
psi	POUNDS PER SQUARE INCH
psf	POUNDS PER SQUARE FOOT
lb/ft^3, pcf	POUNDS PER CUBIC FOOT
tsf	TONS PER SQUARE FOOT
mph, MPH *	MILES PER HOUR
ø	NOMINAL DIAMETER
oz	OUNCE
lb	POUND
kip	1,000 POUNDS
cal	CALORIE
ft	FOOT OR FEET
gal	GALLON

* For use on a sign panel only

STATE OF CALIFORNIA
DEPARTMENT OF TRANSPORTATION

ABBREVIATIONS (SHEET 2 OF 2)

NO SCALE

RSP A10B DATED JULY 19, 2013 SUPERSEDES STANDARD PLAN A10B DATED MAY 20, 2011 - PAGE 2 OF THE STANDARD PLANS BOOK DATED 2010.

REVISED STANDARD PLAN RSP A10B

2010 REVISED STANDARD PLAN RSP A10B

6-7-13

Dist	COUNTY	ROUTE	POST MILES TOTAL PROJECT	SHEET No.	TOTAL SHEETS
08	SBd	38	15.0/49.5	25	50

REGISTERED CIVIL ENGINEER

July 19, 2013
PLANS APPROVAL DATE

REGISTERED PROFESSIONAL ENGINEER Roberta L. McLaughlin No. C40375 Exp. 3-31-15 CIVIL STATE OF CALIFORNIA

THE STATE OF CALIFORNIA OR ITS OFFICERS OR AGENTS SHALL NOT BE RESPONSIBLE FOR THE ACCURACY OR COMPLETENESS OF SCANNED COPIES OF THIS PLAN SHEET.

TO ACCOMPANY PLANS DATED 12-16-13

EXIT RAMP NEUTRAL AREA (GORE) TREATMENT

DETAIL 36

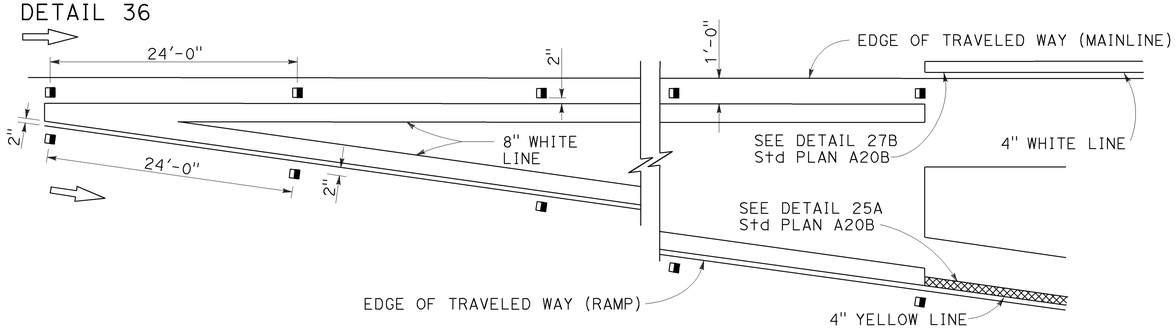

ENTRANCE RAMP NEUTRAL AREA (MERGE) TREATMENT

DETAIL 36A

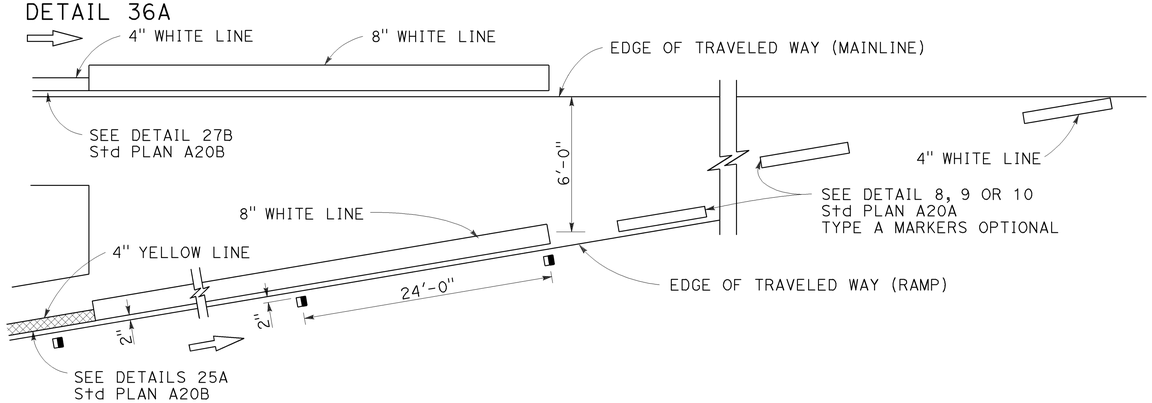

ENTRANCE RAMP NEUTRAL AREA (ACCELERATION LANE) TREATMENT

DETAIL 36B

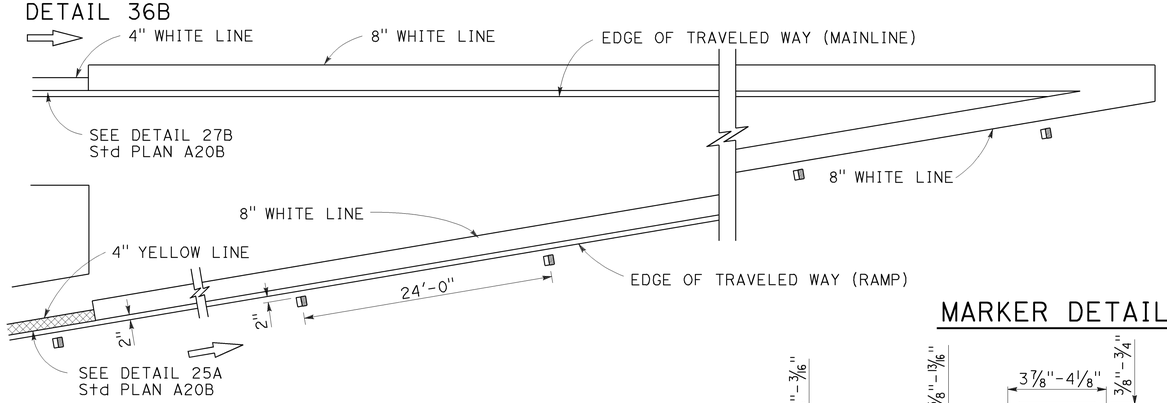

LANE DROP AT EXIT RAMPS

DETAIL 37

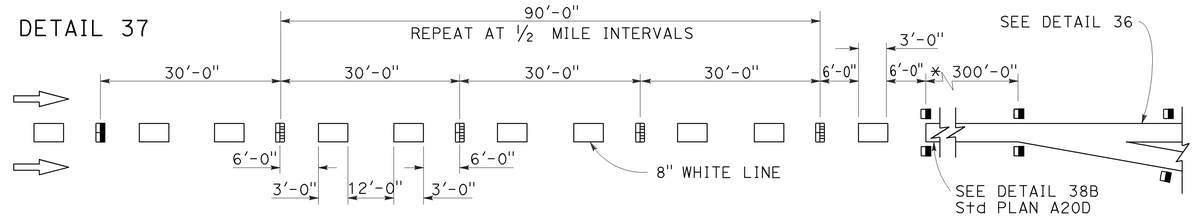

DETAIL 37A

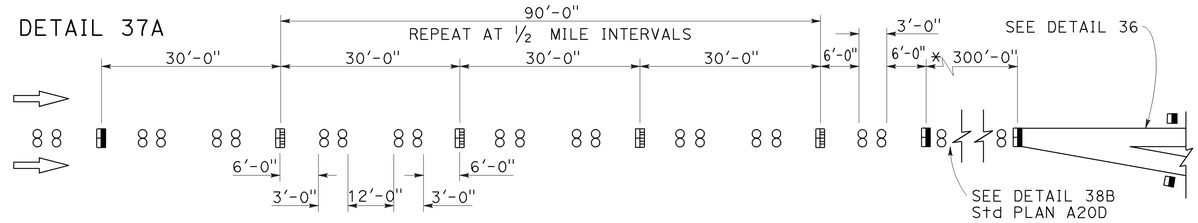

* The solid channelizing line shown may be omitted on short auxiliary lanes where weaving length is critical.

LANE DROP AT INTERSECTIONS

DETAIL 37B

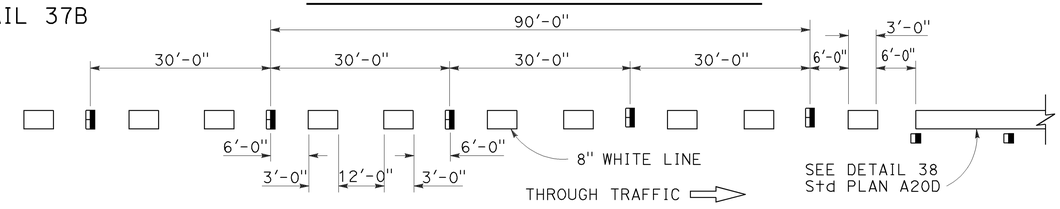

DETAIL 37C

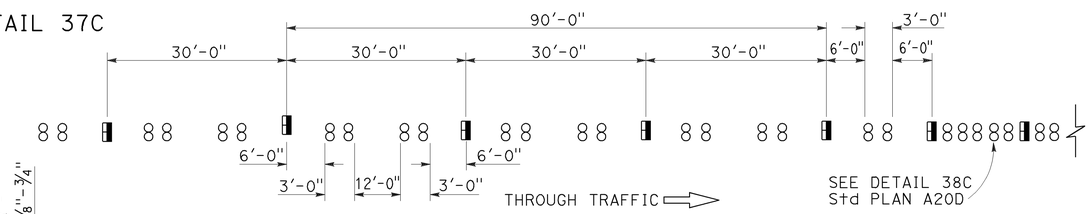

MARKER DETAILS

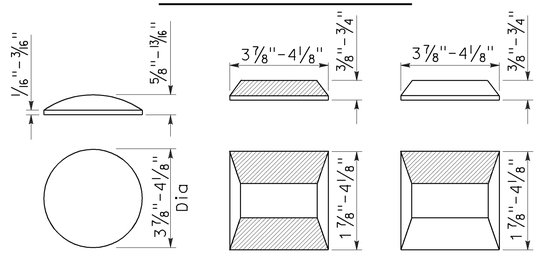

RETROREFLECTIVE FACE

LEGEND:

MARKERS

- ○ TYPE A WHITE NON-REFLECTIVE
- ⊟ TYPE C RED-CLEAR RETROREFLECTIVE
- ◨ TYPE G ONE-WAY CLEAR RETROREFLECTIVE

STATE OF CALIFORNIA
DEPARTMENT OF TRANSPORTATION

PAVEMENT MARKERS AND TRAFFIC LINE TYPICAL DETAILS

NO SCALE

RSP A20C DATED JULY 19, 2013 SUPERSEDES STANDARD PLAN A20C DATED MAY 20, 2011 - PAGE 11 OF THE STANDARD PLANS BOOK DATED 2010.

REVISED STANDARD PLAN RSP A20C

2010 REVISED STANDARD PLAN RSP A20C

4-29-13

Dist	COUNTY	ROUTE	POST MILES TOTAL PROJECT	SHEET No.	TOTAL SHEETS
08	SBd	38	15.0/49.5	26	50

REGISTERED CIVIL ENGINEER

April 20, 2012
PLANS APPROVAL DATE

REGISTERED PROFESSIONAL ENGINEER
Roberta L. McLaughlin
No. C40375
Exp. 3-31-13
CIVIL
STATE OF CALIFORNIA

THE STATE OF CALIFORNIA OR ITS OFFICERS OR AGENTS SHALL NOT BE RESPONSIBLE FOR THE ACCURACY OR COMPLETENESS OF SCANNED COPIES OF THIS PLAN SHEET.

TO ACCOMPANY PLANS DATED 12-16-13

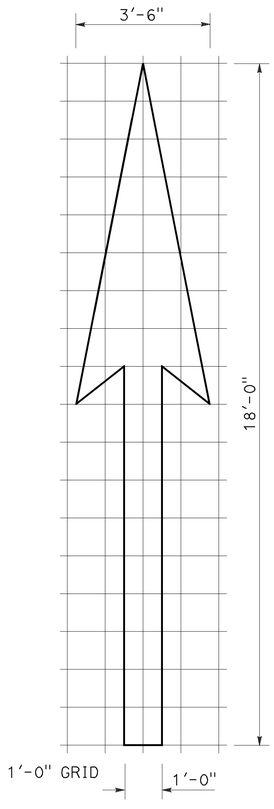

A=25 ft^2

TYPE I 18'-0" ARROW

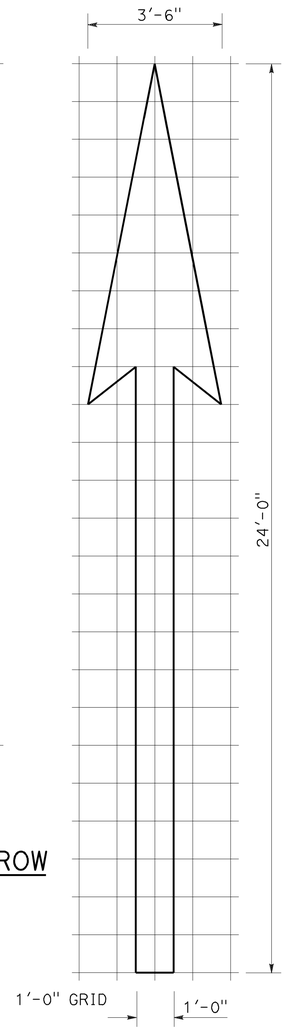

A=31 ft^2

TYPE I 24'-0" ARROW

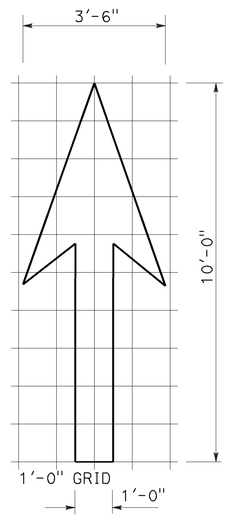

A=14 ft^2

TYPE I 10'-0" ARROW

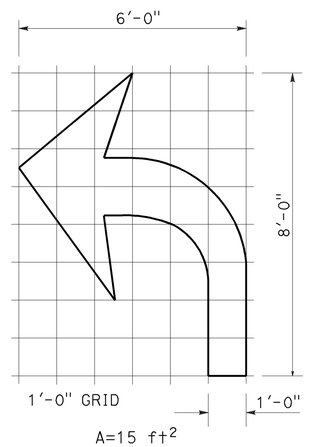

A=15 ft^2

TYPE IV (L) ARROW

(For Type IV (R) arrow, use mirror image)

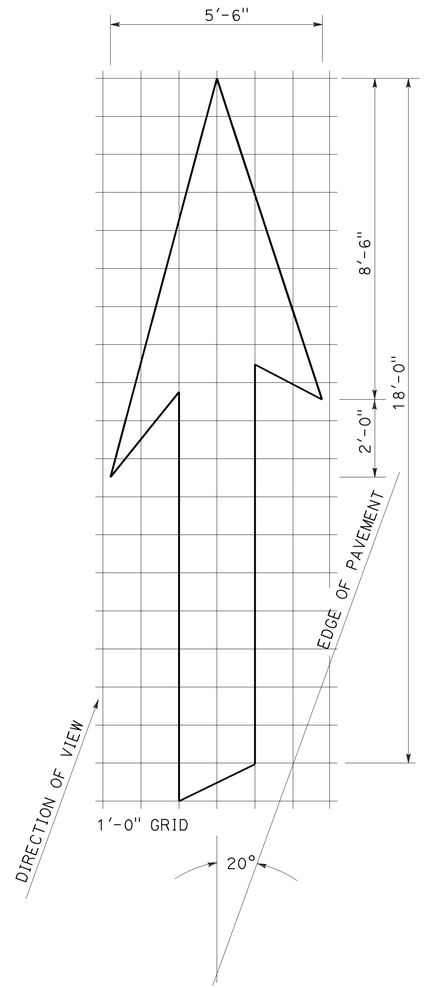

A=42 ft^2

TYPE VI ARROW

Right lane drop arrow
(For left lane, use mirror image)

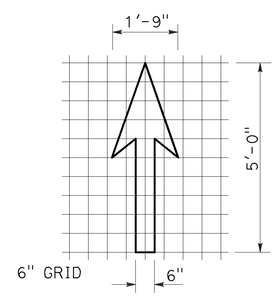

A=3.5 ft^2

BIKE LANE ARROW

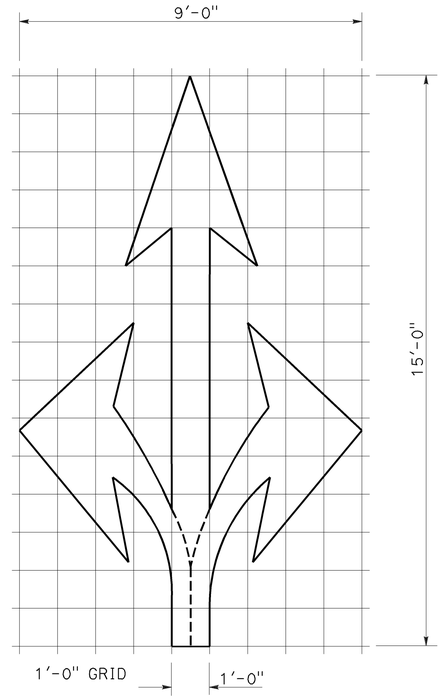

A=36 ft^2

TYPE VIII ARROW

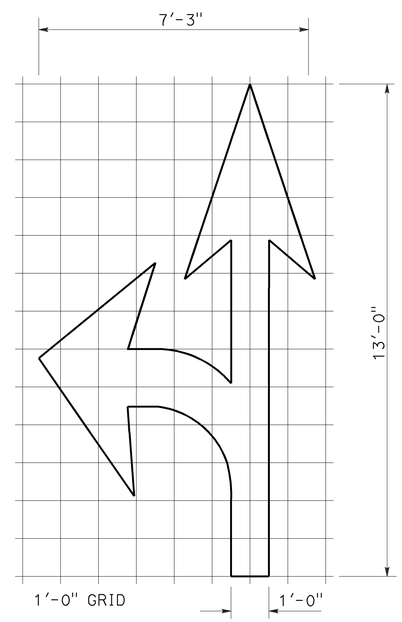

A=27 ft^2

TYPE VII (L) ARROW

(For Type VII (R) arrow, use mirror image)

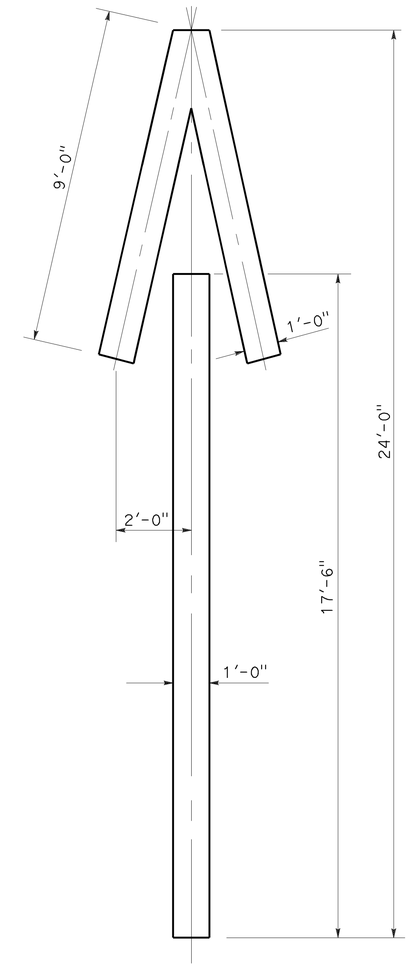

A=33 ft^2

TYPE V ARROW

NOTE:
Minor variations in dimensions may be accepted by the Engineer.

STATE OF CALIFORNIA
DEPARTMENT OF TRANSPORTATION

PAVEMENT MARKINGS ARROWS

NO SCALE

RSP A24A DATED APRIL 20, 2012 SUPERSEDES STANDARD PLAN A24A DATED MAY 20, 2011 - PAGE 13 OF THE STANDARD PLANS BOOK DATED 2010.

REVISED STANDARD PLAN RSP A24A

2010 REVISED STANDARD PLAN RSP A24A

3-14-12

Dist	COUNTY	ROUTE	POST MILES TOTAL PROJECT	SHEET No.	TOTAL SHEETS
08	SBd	38	15.0/49.5	27	50

REGISTERED CIVIL ENGINEER

July 20, 2012
PLANS APPROVAL DATE

REGISTERED PROFESSIONAL ENGINEER
Roberta L. McLaughlin
No. C40375
Exp. 3-31-13
CIVIL
STATE OF CALIFORNIA

THE STATE OF CALIFORNIA OR ITS OFFICERS OR AGENTS SHALL NOT BE RESPONSIBLE FOR THE ACCURACY OR COMPLETENESS OF SCANNED COPIES OF THIS PLAN SHEET.

TO ACCOMPANY PLANS DATED 12-16-13

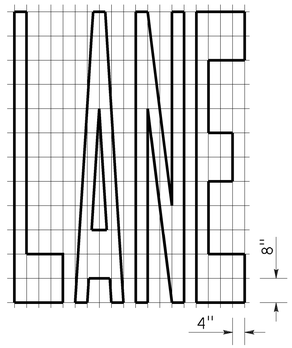

A=24 ft^2

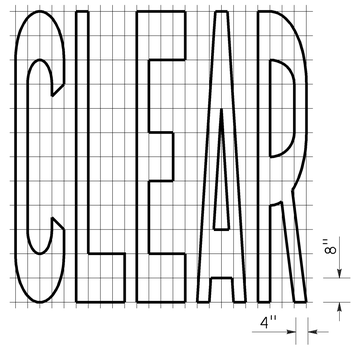

A=27 ft^2

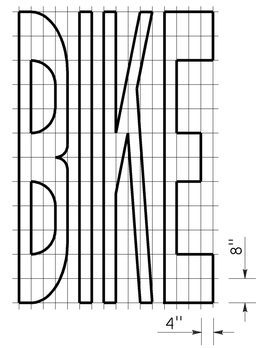

A=21 ft^2

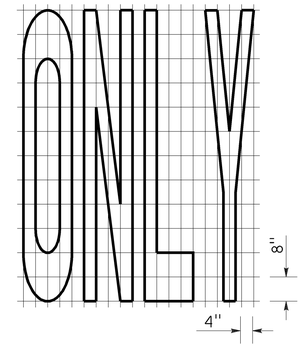

A=22 ft^2

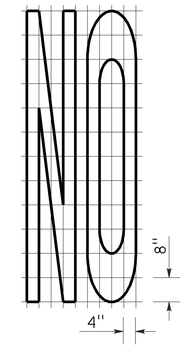

A=14 ft^2

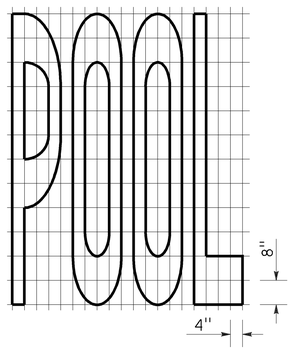

A=23 ft^2

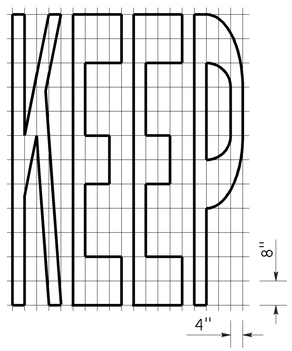

A=24 ft^2

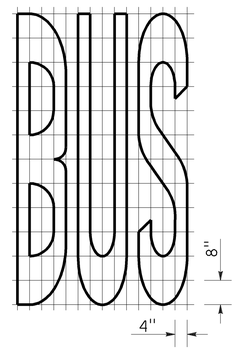

A=20 ft^2

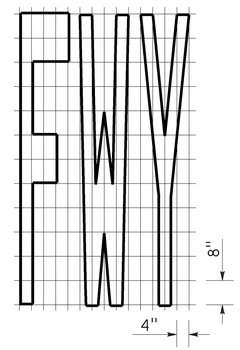

A=16 ft^2

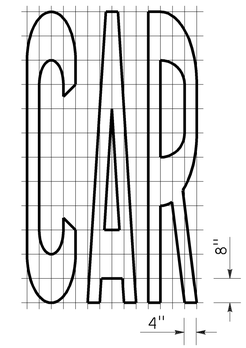

A=17 ft^2

WORD MARKINGS			
ITEM	ft^2	ITEM	ft^2
LANE	24	NO	14
POOL	23	BIKE	21
CAR	17	BUS	20
CLEAR	27	ONLY	22
KEEP	24	FWY	16

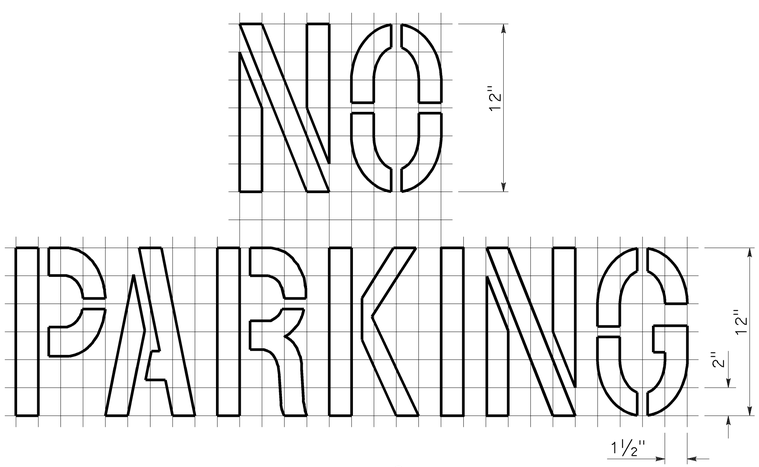

A=2 ft^2
See Notes 6 and 7

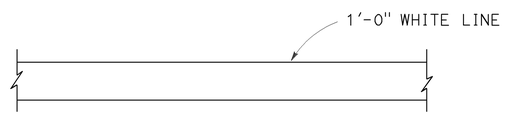

LIMIT LINE (STOP LINE)

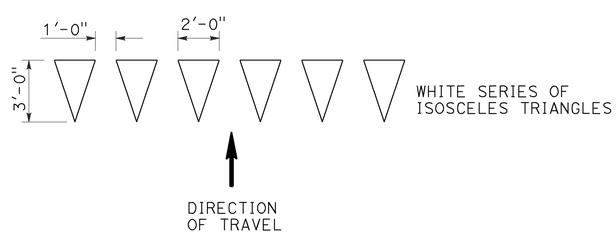

YIELD LINE

NOTES:

1. If a message consists of more than one word, it should read "UP", i.e., the first word should be nearest the driver.
2. The space between words should be at least four times the height of the characters for low speed roads, but not more than ten times the height of the characters. The space may be reduced appropriately where there is limited space because of local conditions.
3. Minor variations in dimensions may be accepted by the Engineer.
4. Portions of a letter, number or symbol may be separated by connecting segments not to exceed 2" in width.
5. The words "NO PARKING" pavement marking is to be used for parking facilities. For typical locations of markings, see Standard Plans A90A and A90B.
6. The words "NO PARKING", shall be painted in white letters no less than 1'-0" high on a contrasting background and located so that it is visible to traffic enforcement officials.

STATE OF CALIFORNIA
DEPARTMENT OF TRANSPORTATION

PAVEMENT MARKINGS WORDS, LIMIT AND YIELD LINES

NO SCALE

RSP A24E DATED JULY 20, 2012 SUPERSEDES STANDARD PLAN A24E
DATED MAY 20, 2011 - PAGE 17 OF THE STANDARD PLANS BOOK DATED 2010.

REVISED STANDARD PLAN RSP A24E

2010 REVISED STANDARD PLAN RSP A24E

6-12-12

Dist	COUNTY	ROUTE	POST MILES TOTAL PROJECT	SHEET No.	TOTAL SHEETS
08	SBd	38	15.0/49.5	28	50

Randell D. Hiatt
REGISTERED CIVIL ENGINEER

July 19, 2013
PLANS APPROVAL DATE

REGISTERED PROFESSIONAL ENGINEER
Randell D. Hiatt
No. C50200
Exp. 6-30-15
CIVIL
STATE OF CALIFORNIA

THE STATE OF CALIFORNIA OR ITS OFFICERS OR AGENTS SHALL NOT BE RESPONSIBLE FOR THE ACCURACY OR COMPLETENESS OF SCANNED COPIES OF THIS PLAN SHEET.

TO ACCOMPANY PLANS DATED 12-16-13

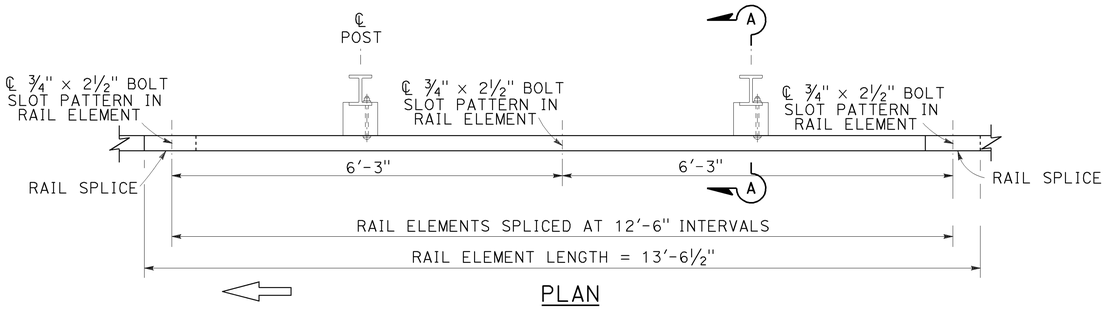

PLAN

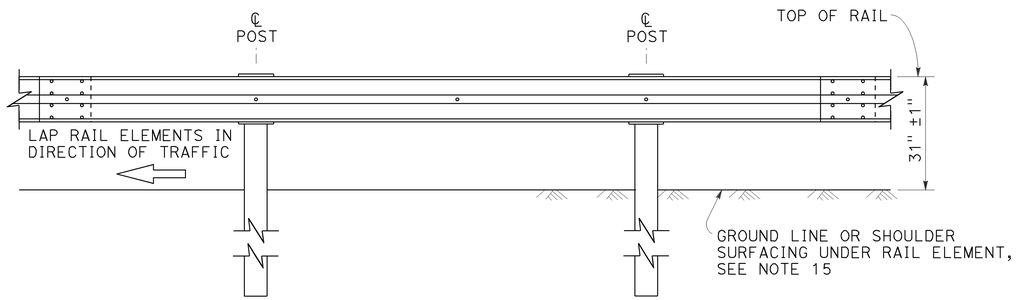

ELEVATION

MIDWEST GUARDRAIL SYSTEM WITH STEEL POSTS AND NOTCHED WOOD OR NOTCHED RECYCLED PLASTIC BLOCKS

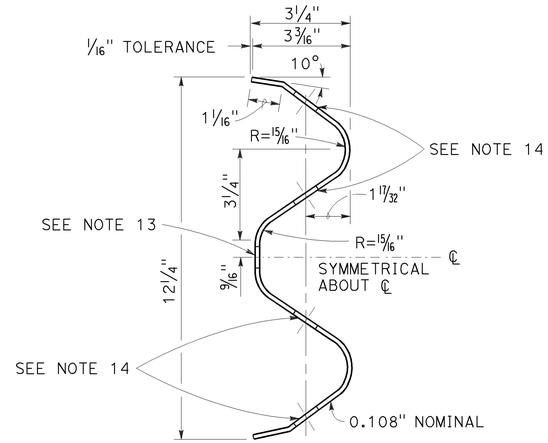

SECTION THRU RAIL ELEMENT

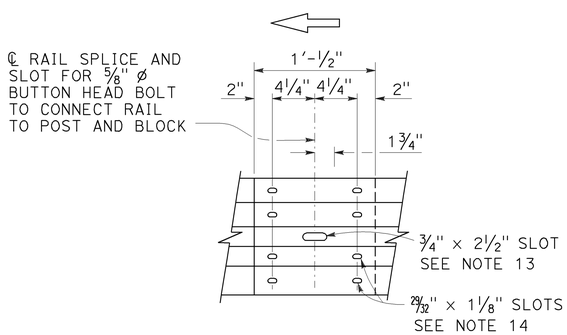

ELEVATION

RAIL ELEMENT SPLICE DETAIL

a) Connect the over lapped end of the rail elements with ⅝" ø × 1⅜" button head oval shoulder splice bolts inserted into the 29⁄32" × 1⅛" slots and bolted together with ⅝" ø recessed hex nuts. Recess of hex nut points toward rail element. A total of 8 bolts and nuts are to be used at each rail splice connection.

b) The ends of the rail elements are to be overlapped in the direction of traffic (see details).

c) Where end cap is to be attached to the end of a rail element, a total of 4 of the above described splice bolts and nuts are to be used.

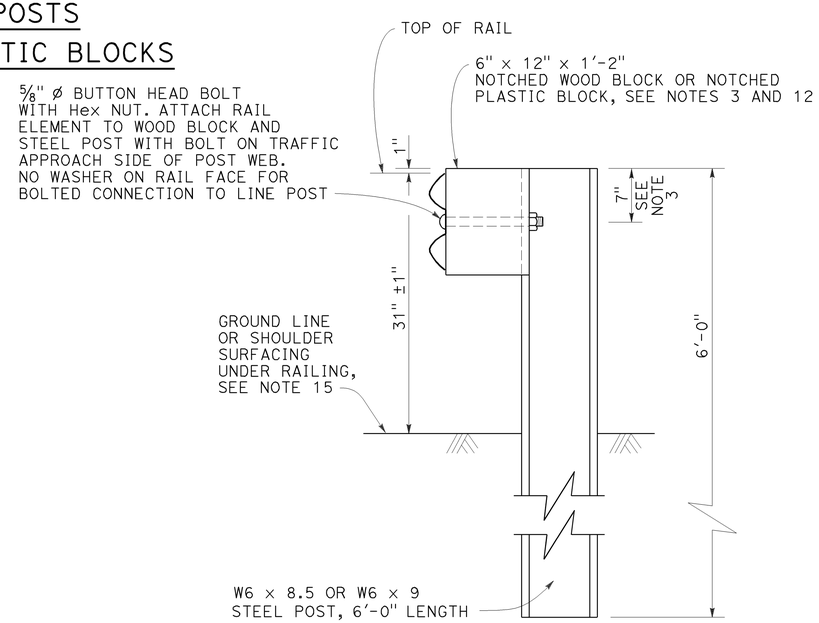

SECTION A-A

TYPICAL STEEL LINE POST INSTALLATION

See Note 4

NOTES:

1. For details of wood post installations, see Revised Standard Plan RSP A77L1.
2. For details of standard hardware used to construct MGS, see Revised Standard Plan RSP A77M1.
3. For details of steel posts and notched wood blocks used to construct MGS, see Revised Standard Plan RSP A77N2.
4. For additional installation details, see Revised Standard Plan RSP A77N3.
5. MGS post spacing to be 6'-3" center to center, except as otherwise noted.
6. For MGS typical layouts, see the A77P, A77Q and A77R Series of Standard Plans.
7. If railing is connected to terminal system end treatment, use 31" height terminal system end treatment.
8. For MGS end anchor details, see Revised Standard Plans RSP A77S1 and RSP A77T2.
9. For details of MGS transition to bridge railing, see Revised Standard Plan RSP A77U4.
10. For additional details of MGS connection to bridge railings, see Revised Standard Plans RSP A77U1, RSP A77U2 and RSP A77V1.
11. For dike positioning and MGS delineation details, see Revised Standard Plan RSP A77N4.
12. Notched face of block faces steel post.
13. Slotted hole for bolted connection of rail element to block and post. See "Section Thru Rail Element".
14. Slotted holes for splice bolts to overlap ends of rail element. See "Section Thru Rail Element".
15. Install posts in soil.

STATE OF CALIFORNIA
DEPARTMENT OF TRANSPORTATION

MIDWEST GUARDRAIL SYSTEM STANDARD RAILING SECTION (STEEL POST WITH NOTCHED WOOD OR NOTCHED RECYCLED PLASTIC BLOCK)

NO SCALE

RSP A77L2 DATED JULY 19, 2013 SUPPLEMENTS THE STANDARD PLANS BOOK DATED 2010.

REVISED STANDARD PLAN RSP A77L2

2010 REVISED STANDARD PLAN RSP A77L2

7-3-13

Dist	COUNTY	ROUTE	POST MILES TOTAL PROJECT	SHEET No.	TOTAL SHEETS
08	SBd	38	15.0/49.5	29	50

Randell D. Hiatt
REGISTERED CIVIL ENGINEER

July 19, 2013
PLANS APPROVAL DATE

REGISTERED PROFESSIONAL ENGINEER
Randell D. Hiatt
No. C50200
Exp. 6-30-15
CIVIL
STATE OF CALIFORNIA

THE STATE OF CALIFORNIA OR ITS OFFICERS OR AGENTS SHALL NOT BE RESPONSIBLE FOR THE ACCURACY OR COMPLETENESS OF SCANNED COPIES OF THIS PLAN SHEET.

TO ACCOMPANY PLANS DATED 12-16-13

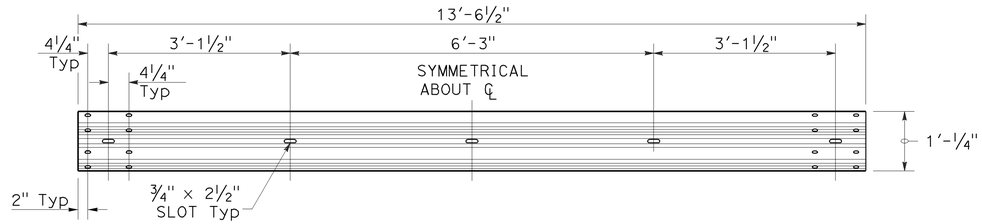

TYPICAL RAIL ELEMENT

NOTE:

1. Slotted holes for splice bolts to overlap ends of rail element.

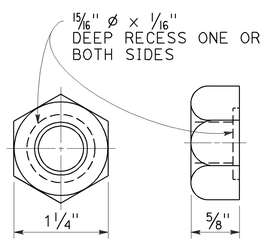

⅝" Ø RECESS NUT

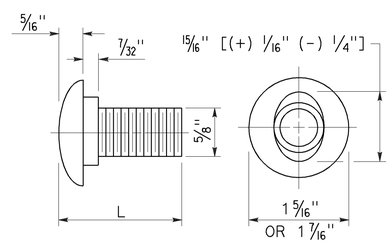

⅝" Ø BUTTON HEAD BOLT

BUTTON HEAD BOLT

L	THREAD LENGTH
1⅜"	FULL THREAD LENGTH
2"	FULL THREAD LENGTH
10"	4" Min THREAD LENGTH
18"	4" Min THREAD LENGTH
20"	4" Min THREAD LENGTH
22"	4" Min THREAD LENGTH
26"	4" Min THREAD LENGTH
36"	4" Min THREAD LENGTH
** 2¾"	2" Min THREAD LENGTH
** 19"	4" Min THREAD LENGTH

** For nested rail applications.

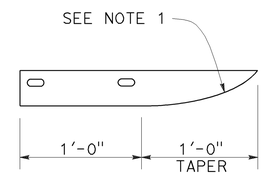

PLAN

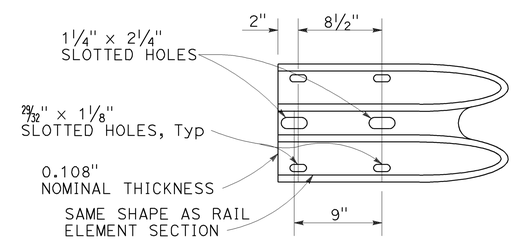

ELEVATION

END CAP
(TYPE A)

STATE OF CALIFORNIA
DEPARTMENT OF TRANSPORTATION

MIDWEST GUARDRAIL SYSTEM STANDARD HARDWARE

NO SCALE

RSP A77M1 DATED JULY 19, 2013 SUPPLEMENTS THE STANDARD PLANS BOOK DATED 2010.

REVISED STANDARD PLAN RSP A77M1

2010 REVISED STANDARD PLAN RSP A77M1

7-3-13

Dist	COUNTY	ROUTE	POST MILES TOTAL PROJECT	SHEET No.	TOTAL SHEETS
08	SBd	38	15.0/49.5	30	50

Randell D. Hiatt
REGISTERED CIVIL ENGINEER

July 19, 2013
PLANS APPROVAL DATE

REGISTERED PROFESSIONAL ENGINEER
Randell D. Hiatt
No. C50200
Exp. 6-30-15
CIVIL
STATE OF CALIFORNIA

THE STATE OF CALIFORNIA OR ITS OFFICERS OR AGENTS SHALL NOT BE RESPONSIBLE FOR THE ACCURACY OR COMPLETENESS OF SCANNED COPIES OF THIS PLAN SHEET.

TO ACCOMPANY PLANS DATED 12-16-13

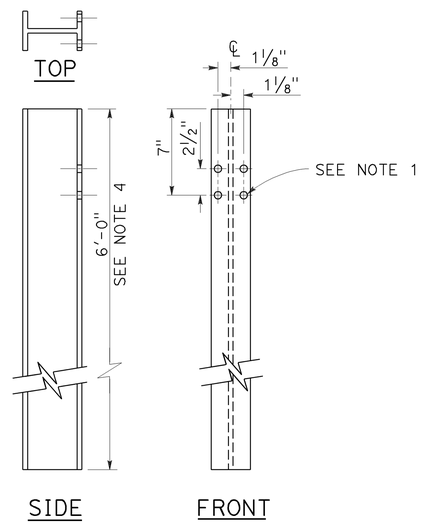

W6 x 9 OR W6 x 8.5
STEEL POST
See Note 4

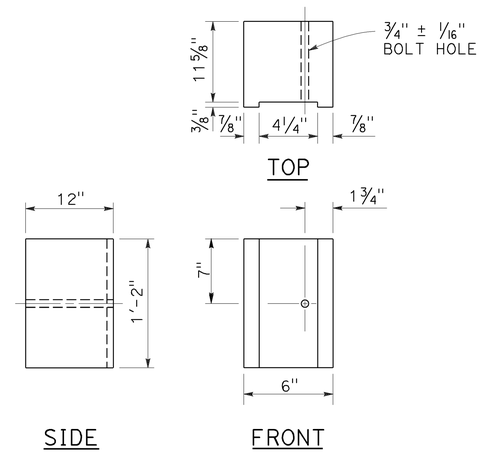

6" x 12"
NOTCHED WOOD BLOCK
See Notes 2 and 3

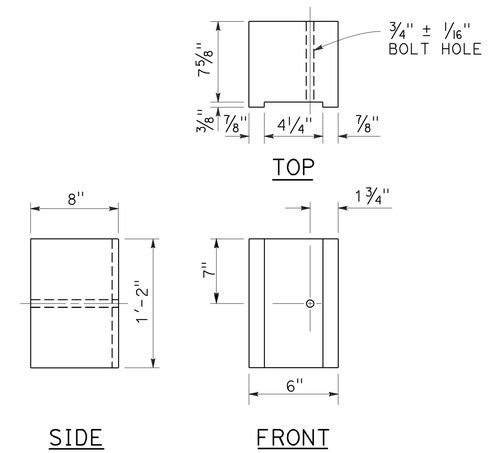

6" x 8"
NOTCHED WOOD BLOCK
Only for use with metal beam guard railing. See Note 5

NOTES:

1. All holes in steel post shall be 13/16" Dia maximum.
2. Dimensions shown for wood block are nominal.
3. Notched face of block faces steel post.
4. 6'-0" length posts to be used for typical roadway installation. 7'-0" length posts to be used for narrow roadway installation. See Revised Standard Plan RSP A77N3.
5. See Revised Standard Plan RSP A77L3 for use of 6" x 8" and 8" x 8" notched wood blocks.
6. This post and 8" x 12" block combination to be used for line post sections of MGS on narrow roadways and where strengthened line post sections of MGS are warranted to shield fixed objects.

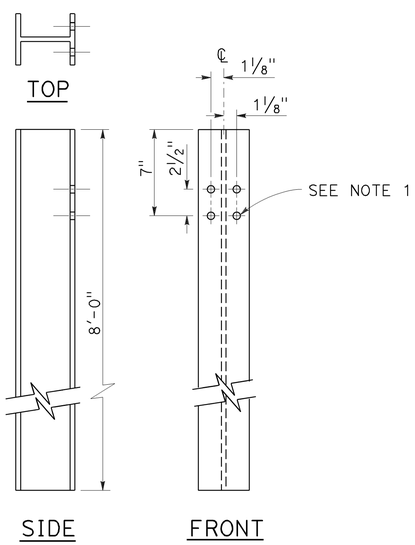

W6 x 15
STEEL POST
See Note 6

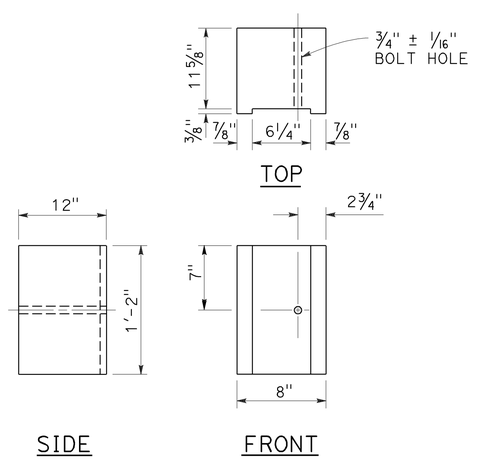

8" x 12"
NOTCHED WOOD BLOCK
See Notes 2 and 3

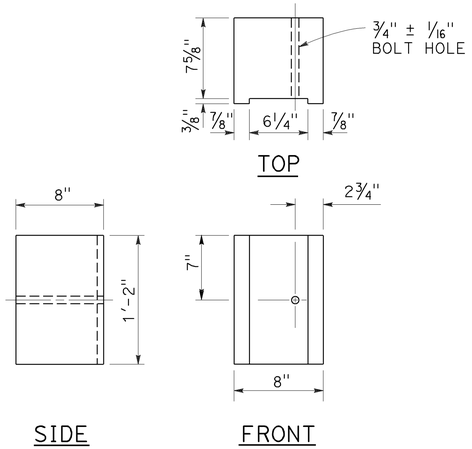

8" x 8"
NOTCHED WOOD BLOCK
Only for use with metal beam guard railing. See Note 5

STATE OF CALIFORNIA
DEPARTMENT OF TRANSPORTATION

MIDWEST GUARDRAIL SYSTEM STEEL POST AND NOTCHED WOOD BLOCK DETAILS

NO SCALE

RSP A77N2 DATED JULY 19, 2013 SUPPLEMENTS THE STANDARD PLANS BOOK DATED 2010.

REVISED STANDARD PLAN RSP A77N2

2010 REVISED STANDARD PLAN RSP A77N2

Dist	COUNTY	ROUTE	POST MILES TOTAL PROJECT	SHEET No.	TOTAL SHEETS
08	SBd	38	15.0/49.5	31	50

Randell D. Hiatt
REGISTERED CIVIL ENGINEER

July 19, 2013
PLANS APPROVAL DATE

REGISTERED PROFESSIONAL ENGINEER
Randell D. Hiatt
No. C50200
Exp. 6-30-15
CIVIL
STATE OF CALIFORNIA

THE STATE OF CALIFORNIA OR ITS OFFICERS OR AGENTS SHALL NOT BE RESPONSIBLE FOR THE ACCURACY OR COMPLETENESS OF SCANNED COPIES OF THIS PLAN SHEET.

TO ACCOMPANY PLANS DATED 12-16-13

2010 REVISED STANDARD PLAN RSP A77N3

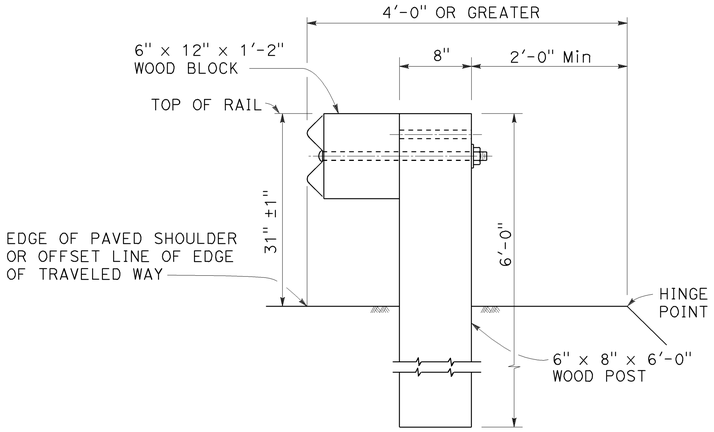

DETAIL A

TYPICAL ROADWAY INSTALLATION

See Note 1

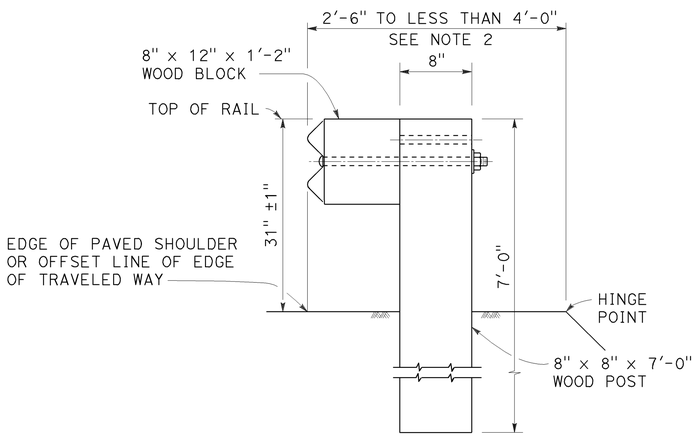

DETAIL B

NARROW ROADWAY INSTALLATION

See Note 1

POST EMBEDMENT

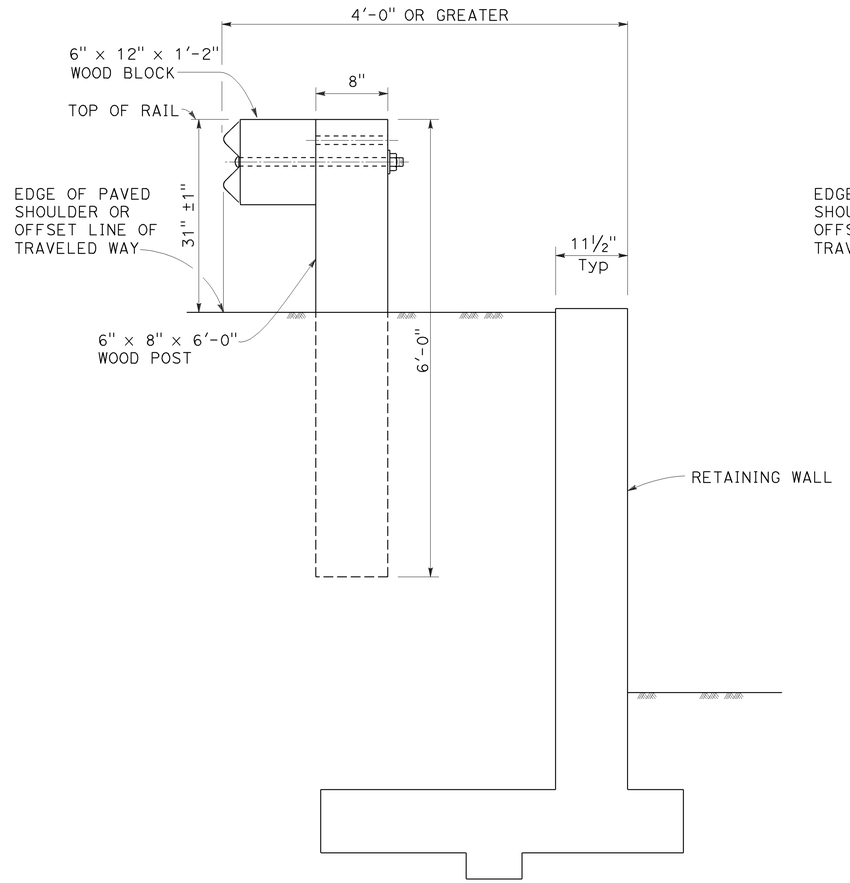

DETAIL C

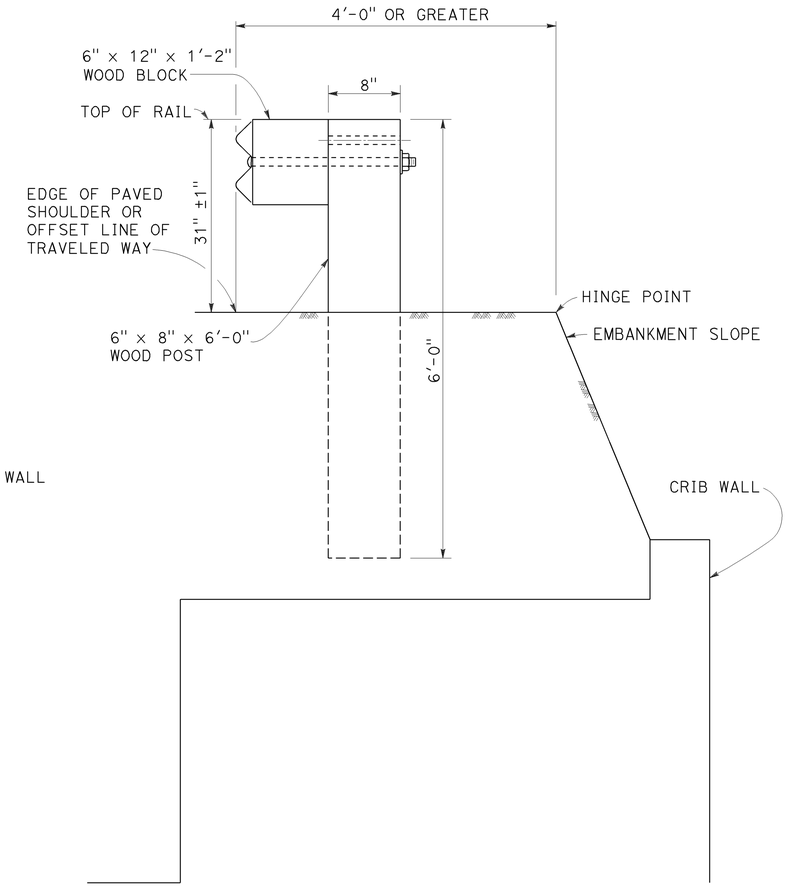

DETAIL D

INSTALLATION AT EARTH RETAINING WALLS

NOTES:

1. These installation details also applicable to steel line post installations. For Detail A, C, and D, where steel line post installations are constructed, W6 x 8.5 or W6 x 9 steel post, 6'-0" in length, with 6" x 12" x 1'-2" notched wood blocks or notched recycled plastic blocks are to be used in place of the size of wood post and wood block shown. For Detail B, where steel line post installations are constructed, or W6 x 15 steel post, 8'-0" in length, with 8" x 12" x 1'-2" notched wood blocks or notched recycled plastic blocks are to be used in place of the size of wood post and wood block shown. For additional installation details, see Revised Standard Plan RSP A77L1 and RSP A77L2.
2. Where the distance between the face of the rail and the hinge point is less than 2'-6", see the Project Plans for special details.
3. For dike positioning with MGS installations, see Revised Standard Plan RSP A77N4.

STATE OF CALIFORNIA
DEPARTMENT OF TRANSPORTATION

MIDWEST GUARDRAIL SYSTEM TYPICAL LINE POST EMBEDMENT AND HINGE POINT OFFSET DETAILS

NO SCALE

RSP A77N3 DATED JULY 19, 2013 SUPPLEMENTS THE STANDARD PLANS BOOK DATED 2010.

REVISED STANDARD PLAN RSP A77N3

Dist	COUNTY	ROUTE	POST MILES TOTAL PROJECT	SHEET No.	TOTAL SHEETS
08	SBd	38	15.0/49.5	32	50

Randell D. Hiatt
REGISTERED CIVIL ENGINEER

July 19, 2013
PLANS APPROVAL DATE

REGISTERED PROFESSIONAL ENGINEER
Randell D. Hiatt
No. C50200
Exp. 6-30-15
CIVIL
STATE OF CALIFORNIA

THE STATE OF CALIFORNIA OR ITS OFFICERS OR AGENTS SHALL NOT BE RESPONSIBLE FOR THE ACCURACY OR COMPLETENESS OF SCANNED COPIES OF THIS PLAN SHEET.

TO ACCOMPANY PLANS DATED 12-16-13

NOTES:

1. When necessary to place dike more than 7" in front of face of MGS, only Type C dike may be used. For dike details, see Revised Standard Plan RSP A87B.
2. For standard railing post embedment, see Revised Standard Plan RSP A77N3.
3. MGS delineation to be used where shown on the Project Plans.
4. When dike or curb is placed under MGS, the maximum height of the dike or curb shall be 6". Mountable dike should not be used. For dike and curb details, see Revised Standard Plans RSP A87A and RSP A87B.
5. For details of typical distance between the face of rail and hinge point, see Revised Standard Plan RSP A77N3.
6. For steel line posts, use 1/4 - 20 self-tapping screws in 0.22" diameter holes or 1/4" bolts in 9/32" diameter holes.

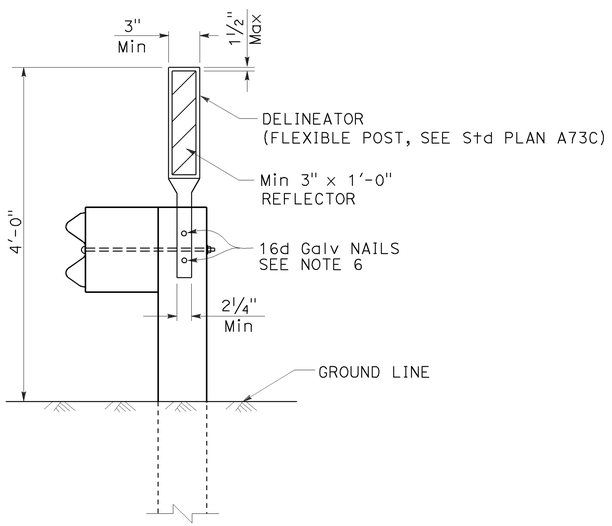

MGS DELINEATION

See Note 3

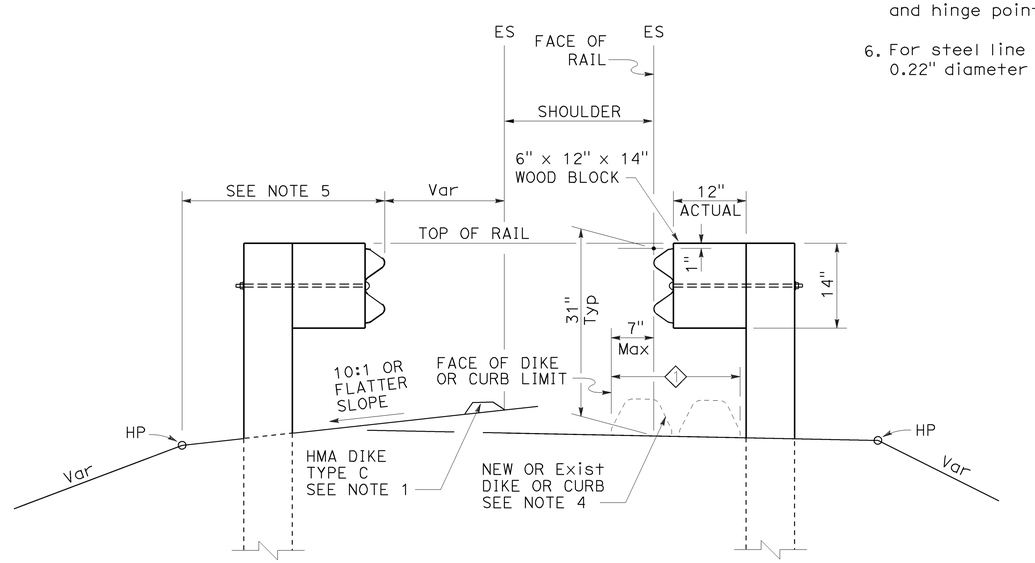

DIKE POSITIONING

See Note 1

1 PERMISSIBLE DIKE OR CURB PLACEMENT AREA

STATE OF CALIFORNIA
DEPARTMENT OF TRANSPORTATION

MIDWEST GUARDRAIL SYSTEM TYPICAL RAILING DELINEATION AND DIKE POSITIONING DETAILS

NO SCALE

RSP A77N4 DATED JULY 19, 2013 SUPPLEMENTS THE STANDARD PLANS BOOK DATED 2010.

REVISED STANDARD PLAN RSP A77N4

2010 REVISED STANDARD PLAN RSP A77N4

7-10-13

Dist	COUNTY	ROUTE	POST MILES TOTAL PROJECT	SHEET No.	TOTAL SHEETS
08	SBd	38	15.0/49.5	33	50

Randell D. Hiatt
REGISTERED CIVIL ENGINEER

July 19, 2013
PLANS APPROVAL DATE

REGISTERED PROFESSIONAL ENGINEER
Randell D. Hiatt
No. C50200
Exp. 6-30-15
CIVIL
STATE OF CALIFORNIA

THE STATE OF CALIFORNIA OR ITS OFFICERS OR AGENTS SHALL NOT BE RESPONSIBLE FOR THE ACCURACY OR COMPLETENESS OF SCANNED COPIES OF THIS PLAN SHEET.

TO ACCOMPANY PLANS DATED 12-16-13

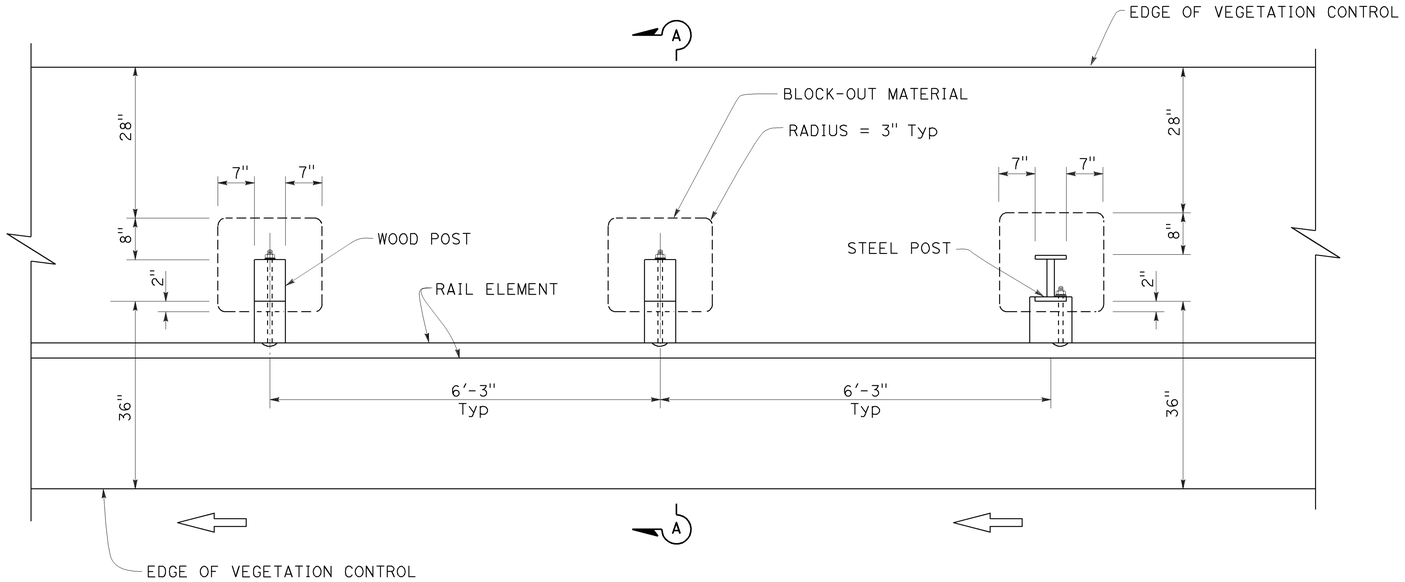

PLAN

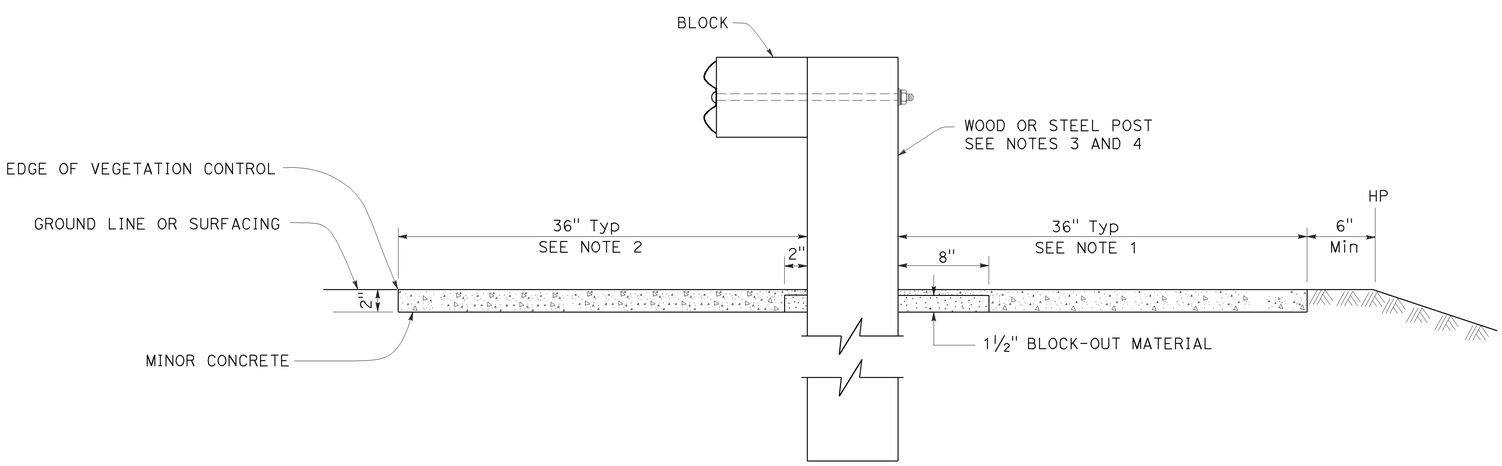

SECTION A-A

NOTES:

1. Where the distance between back of post and hinge point is less than 42", construct vegetation control to 6" from hinge point while maintaining the 8" block-out at back of post. If the 8" block-out at back of post can not be maintained, construct vegetation control flush with the back edge of post.
2. Where dike is constructed under railing, construct vegetation control to back edge of dike. Where paved shoulder is constructed within 36" in front of the post, construct vegetation control to the edge of paved shoulder.
3. For wood post sizes, see Revised Standard Plan RSP A77N1.
4. For steel post sizes, see Revised Standard Plan RSP A77N2.
5. For details not shown, see Revised Standard Plans RSP A77L1 and RSP A77L2.

STATE OF CALIFORNIA
DEPARTMENT OF TRANSPORTATION

MIDWEST GUARDRAIL SYSTEM TYPICAL VEGETATION CONTROL STANDARD RAILING SECTION

NO SCALE

RSP A77N5 DATED JULY 19, 2013 SUPPLEMENTS THE STANDARD PLANS BOOK DATED 2010.

REVISED STANDARD PLAN RSP A77N5

2010 REVISED STANDARD PLAN RSP A77N5

7-3-13

Dist	COUNTY	ROUTE	POST MILES TOTAL PROJECT	SHEET No.	TOTAL SHEETS
08	SBd	38	15.0/49.5	34	50

Randell D. Hiatt
REGISTERED CIVIL ENGINEER

July 19, 2013
PLANS APPROVAL DATE

REGISTERED PROFESSIONAL ENGINEER
Randell D. Hiatt
No. C50200
Exp. 6-30-15
CIVIL
STATE OF CALIFORNIA

THE STATE OF CALIFORNIA OR ITS OFFICERS OR AGENTS SHALL NOT BE RESPONSIBLE FOR THE ACCURACY OR COMPLETENESS OF SCANNED COPIES OF THIS PLAN SHEET.

TO ACCOMPANY PLANS DATED _____

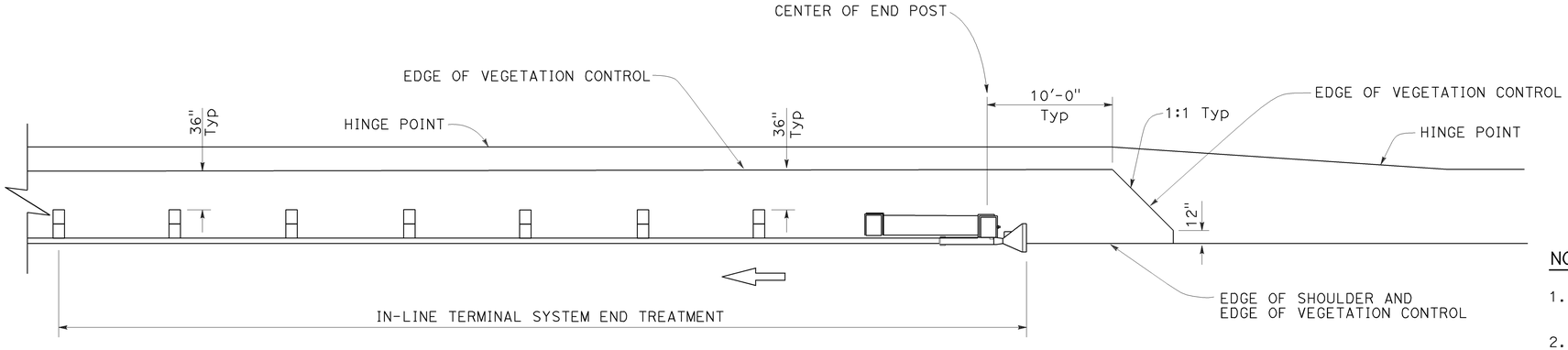

PLAN

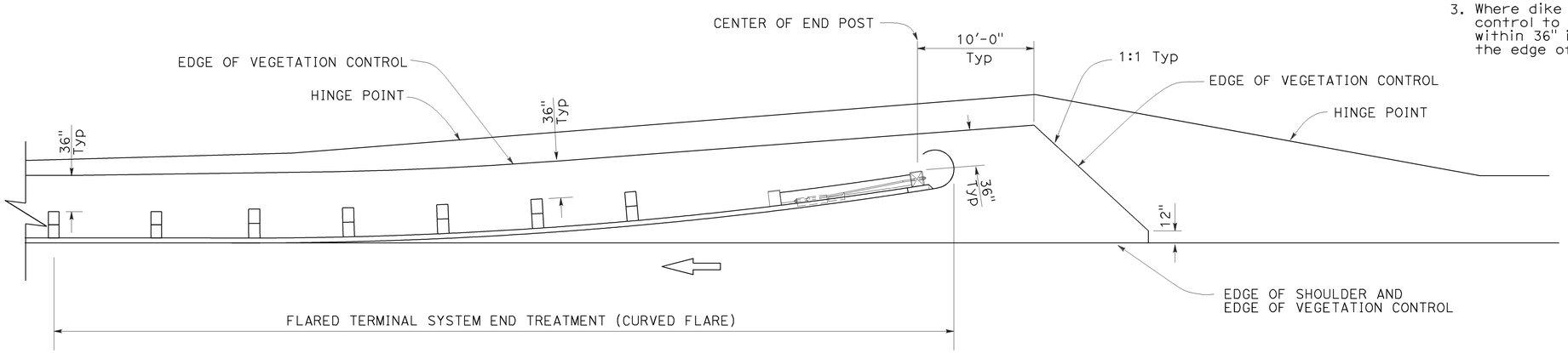

PLAN

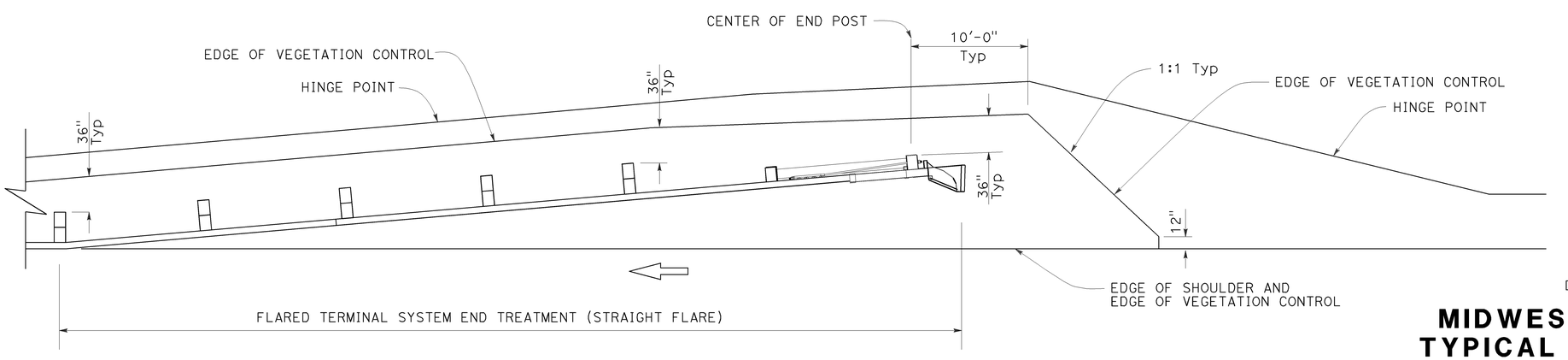

PLAN

NOTES:

1. See Revised Standard Plan RSP A77N5 for additional vegetation control details.
2. Where the distance between back of post and hinge point is less than 42", construct vegetation control to 6" from hinge point while maintaining the 8" block-out at back of post. If the 8" block-out at back of post can not be maintained, construct vegetation control flush with the back edge of post.
3. Where dike is constructed under railing, construct vegetation control to back edge of dike. Where paved shoulder is constructed within 36" in front of the post, construct vegetation control to the edge of paved shoulder.

STATE OF CALIFORNIA
DEPARTMENT OF TRANSPORTATION

MIDWEST GUARDRAIL SYSTEM TYPICAL VEGETATION CONTROL FOR TERMINAL SYSTEM END TREATMENTS

NO SCALE

RSP A77N6 DATED JULY 19, 2013 SUPPLEMENTS THE STANDARD PLANS BOOK DATED 2010.

REVISED STANDARD PLAN RSP A77N6

2010 REVISED STANDARD PLAN RSP A77N6

6-12-13

Dist	COUNTY	ROUTE	POST MILES TOTAL PROJECT	SHEET No.	TOTAL SHEETS
08	SBd	38	15.0/49.5	35	50

Randell D. Hiatt
REGISTERED CIVIL ENGINEER

July 19, 2013
PLANS APPROVAL DATE

REGISTERED PROFESSIONAL ENGINEER
Randell D. Hiatt
No. C50200
Exp. 6-30-15
CIVIL
STATE OF CALIFORNIA

THE STATE OF CALIFORNIA OR ITS OFFICERS OR AGENTS SHALL NOT BE RESPONSIBLE FOR THE ACCURACY OR COMPLETENESS OF SCANNED COPIES OF THIS PLAN SHEET.

TO ACCOMPANY PLANS DATED _____

NOTES:

1. See Revised Standard Plan RSP A77N5 for additional vegetation control details.
2. Where the distance between back of post and hinge point is less than 42", construct vegetation control to 6" from hinge point while maintaining the 8" block-out at back of post. If the 8" block-out at back of post can not be maintained, construct vegetation control flush with the back edge of post.
3. Where dike is constructed under railing, construct vegetation control to back edge of dike. Where paved shoulder is constructed within 36" in front of the post, construct vegetation control to the edge of paved shoulder.

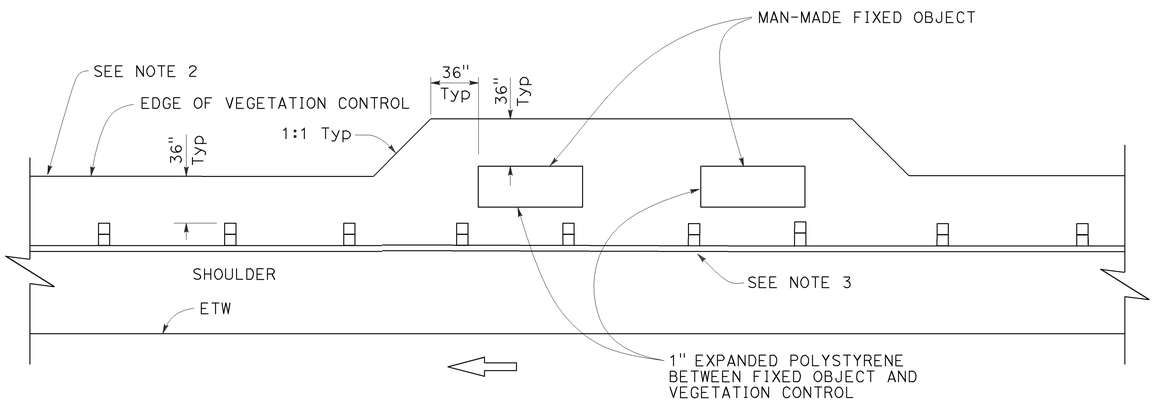

PLAN

Fixed object(s) on shoulder

STATE OF CALIFORNIA
DEPARTMENT OF TRANSPORTATION

MIDWEST GUARDRAIL SYSTEM TYPICAL VEGETATION CONTROL AT FIXED OBJECT

NO SCALE

RSP A77N8 DATED JULY 19, 2013 SUPPLEMENTS THE STANDARD PLANS BOOK DATED 2010.

REVISED STANDARD PLAN RSP A77N8

2010 REVISED STANDARD PLAN RSP A77N8

6-12-13

Dist	COUNTY	ROUTE	POST MILES TOTAL PROJECT	SHEET No.	TOTAL SHEETS
08	SBd	38	15.0/49.5	36	50

Randell D. Hiatt
REGISTERED CIVIL ENGINEER

July 19, 2013
PLANS APPROVAL DATE

REGISTERED PROFESSIONAL ENGINEER
Randell D. Hiatt
No. C50200
Exp. 6-30-15
CIVIL
STATE OF CALIFORNIA

THE STATE OF CALIFORNIA OR ITS OFFICERS OR AGENTS SHALL NOT BE RESPONSIBLE FOR THE ACCURACY OR COMPLETENESS OF SCANNED COPIES OF THIS PLAN SHEET.

TO ACCOMPANY PLANS DATED _____

NOTES:

1. See Revised Standard Plan RSP A77N5 for additional vegetation control details.
2. Where dike is constructed under railing, construct vegetation control to back edge of dike. Where paved shoulder is constructed within 36" in front of the post, construct vegetation control to the edge of paved shoulder.

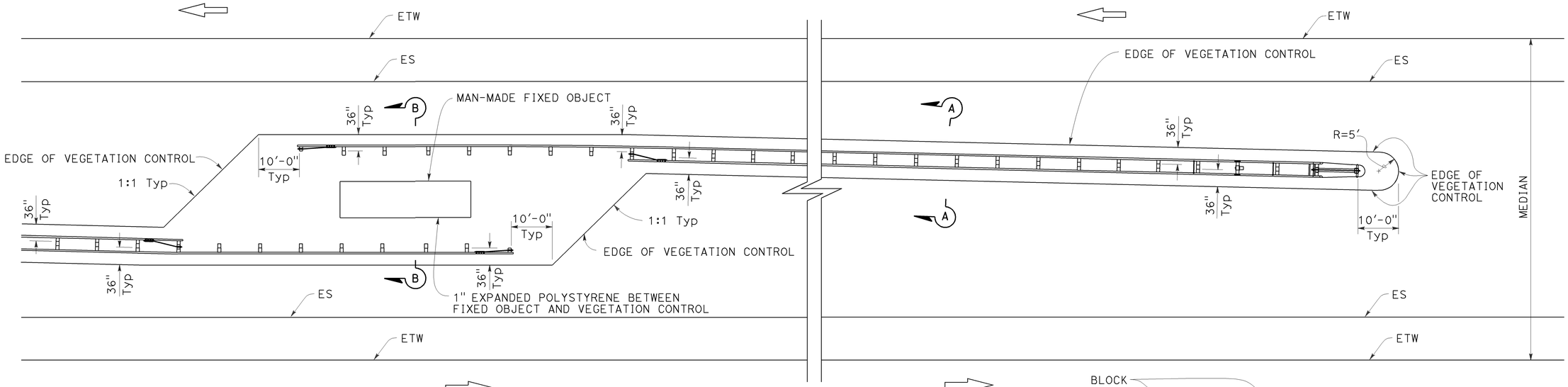

PLAN

Fixed object(s) in median

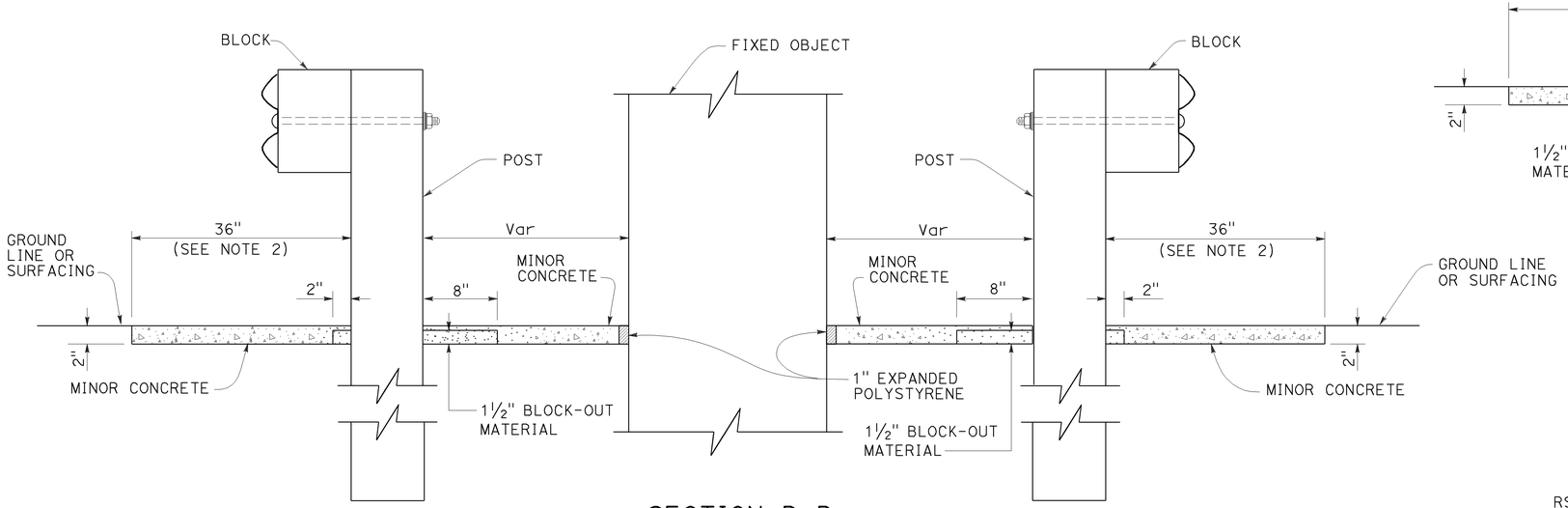

SECTION B-B

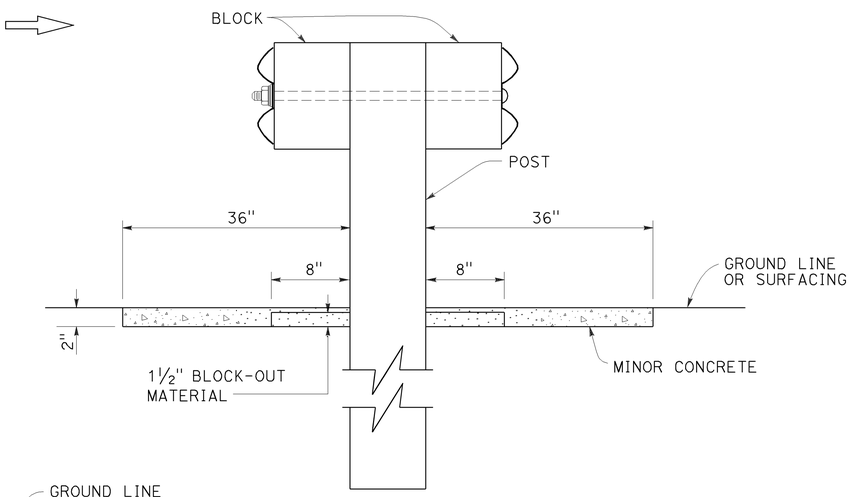

SECTION A-A

STATE OF CALIFORNIA
DEPARTMENT OF TRANSPORTATION

MIDWEST GUARDRAIL SYSTEM TYPICAL VEGETATION CONTROL AT FIXED OBJECT

NO SCALE

RSP A77N9 DATED JULY 19, 2013 SUPPLEMENTS THE STANDARD PLANS BOOK DATED 2010.

REVISED STANDARD PLAN RSP A77N9

2010 REVISED STANDARD PLAN RSP A77N9

6-12-13

Dist	COUNTY	ROUTE	POST MILES TOTAL PROJECT	SHEET No.	TOTAL SHEETS
08	SBd	38	15.0/49.5	37	50

Randell D. Hiatt
REGISTERED CIVIL ENGINEER

July 19, 2013
PLANS APPROVAL DATE

REGISTERED PROFESSIONAL ENGINEER
Randell D. Hiatt
No. C50200
Exp. 6-30-15
CIVIL
STATE OF CALIFORNIA

THE STATE OF CALIFORNIA OR ITS OFFICERS OR AGENTS SHALL NOT BE RESPONSIBLE FOR THE ACCURACY OR COMPLETENESS OF SCANNED COPIES OF THIS PLAN SHEET.

TO ACCOMPANY PLANS DATED _____

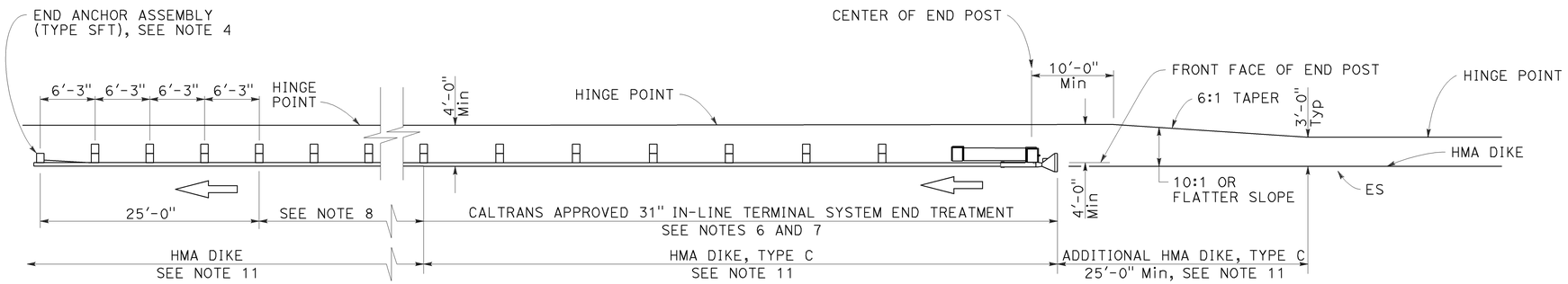

TYPE 11A LAYOUT

(Embankment MGS installation with 31" in-line end treatment at traffic approach end of railing) see Note 5

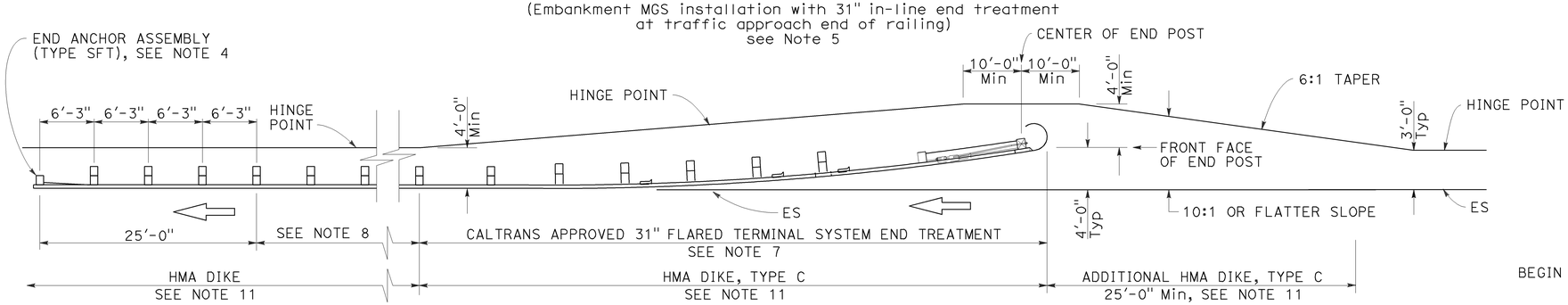

TYPE 11B LAYOUT

(Embankment MGS installation with 31" flared end treatment at traffic approach end of railing) see Note 5

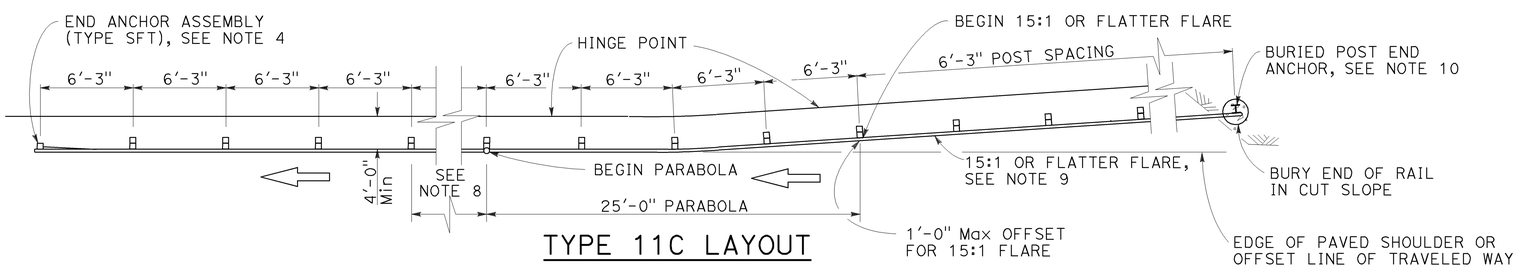

TYPE 11C LAYOUT

(Embankment MGS installation with buried end anchor treatment at traffic approach end of railing) see Notes 5 and 11

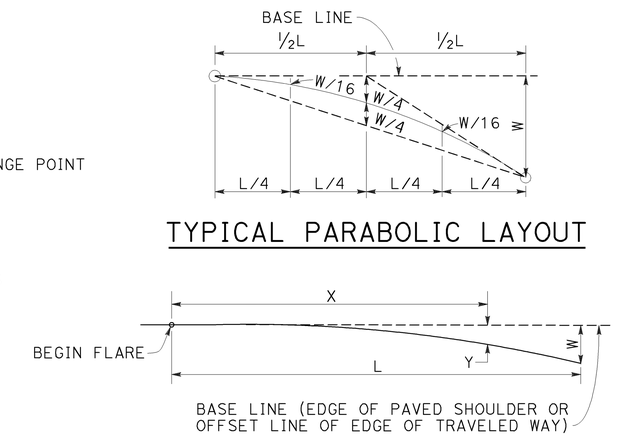

TYPICAL PARABOLIC LAYOUT

$$Y = \frac{WX^2}{L^2}$$

Y = OFFSET FROM BASE LINE
W = MAXIMUM OFFSET
X = DISTANCE ALONG BASE LINE
L = LENGTH OF FLARE

PARABOLIC FLARE OFFSETS

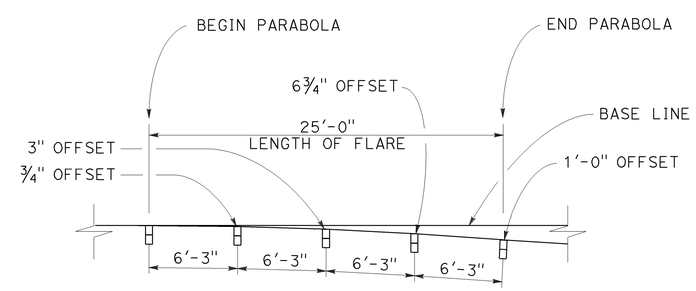

TYPICAL FLARE OFFSETS FOR 1 FOOT Max END OFFSET

NOTES:

1. Line post, blocks and hardware to be used are shown on Revised Standard Plans RSP A77L1, RSP A77L2, RSP A77M1, RSP A77N1 and RSP A77N2.
2. MGS post spacing to be 6'-3" center to center, except as otherwise noted.
3. Except as noted, line posts are 6" x 8" x 6'-0" wood with 6" x 12" x 1'-2" wood blocks. W6 x 8.5 or W6 x 9 steel posts, 6'-0" in length, with 6" x 12" x 1'-2" notched wood blocks or recycled plastic blocks may be used for 6" x 8" x 6'-0" wood post with 6" x 12" x 1'-2" wood blocks where applicable and when specified.
4. For End Anchor Assembly (Type SFT) details, see Revised Standard Plan RSP A77H1.
5. Layout Types 11A, 11B or 11C are typically used where MGS is recommended to shield embankment slopes and a crashworthy end treatment is required for only one direction of traffic.
6. 31" in-line terminal system end treatments are used where site conditions will not accommodate a flared end treatment.
7. The type of 31" terminal system end treatment to be used will be shown on the Project Plans.
8. Dependent on site conditions (embankment height and side slope), construction of additional MGS (length equal to multiples of 12'-6" with 6'-3" post spacing) may be advisable.
9. The 15:1 or flatter flare used with buried end anchors is based on the edge of the paved shoulder or offset line of edge of the traveled way. The length of MGS within the 15:1 or flatter flare is based on site conditions and should be a length equal to multiples of 12'-6".
10. For details of the buried post end anchor used with Type 11C Layout, see Revised Standard Plan RSP A77T2.
11. Where placement of dike is required with MGS installations, see Revised Standard Plan RSP A77N4 for dike positioning details.

STATE OF CALIFORNIA
DEPARTMENT OF TRANSPORTATION

MIDWEST GUARDRAIL SYSTEM TYPICAL LAYOUTS FOR EMBANKMENTS

NO SCALE

RSP A77P1 DATED JULY 19, 2013 SUPPLEMENTS THE STANDARD PLANS BOOK DATED 2010.

REVISED STANDARD PLAN RSP A77P1

2010 REVISED STANDARD PLAN RSP A77P1

6-20-13

Dist	COUNTY	ROUTE	POST MILES TOTAL PROJECT	SHEET No.	TOTAL SHEETS
08	SBd	38	15.0/49.5	38	50

Randell D. Hiatt
REGISTERED CIVIL ENGINEER

July 19, 2013
PLANS APPROVAL DATE

REGISTERED PROFESSIONAL ENGINEER
Randell D. Hiatt
No. C50200
Exp. 6-30-15
CIVIL
STATE OF CALIFORNIA

THE STATE OF CALIFORNIA OR ITS OFFICERS OR AGENTS SHALL NOT BE RESPONSIBLE FOR THE ACCURACY OR COMPLETENESS OF SCANNED COPIES OF THIS PLAN SHEET.

TO ACCOMPANY PLANS DATED _____

2010 REVISED STANDARD PLAN RSP A77P2

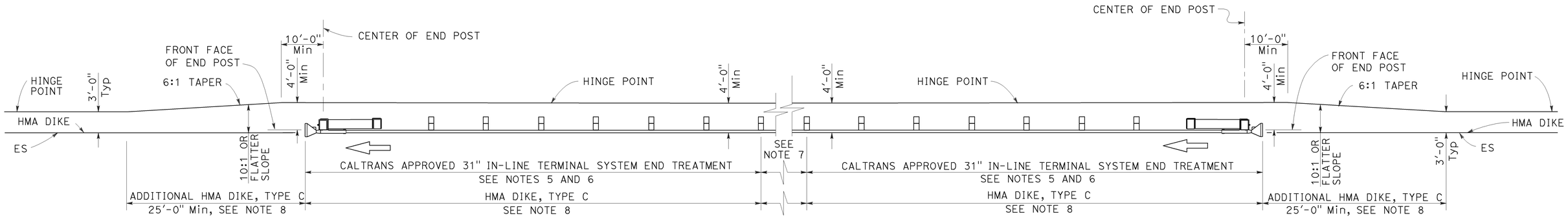

TYPE 11D LAYOUT

(Embankment MGS installation with
31" in-line end treatment at each end of railing)
See Note 4

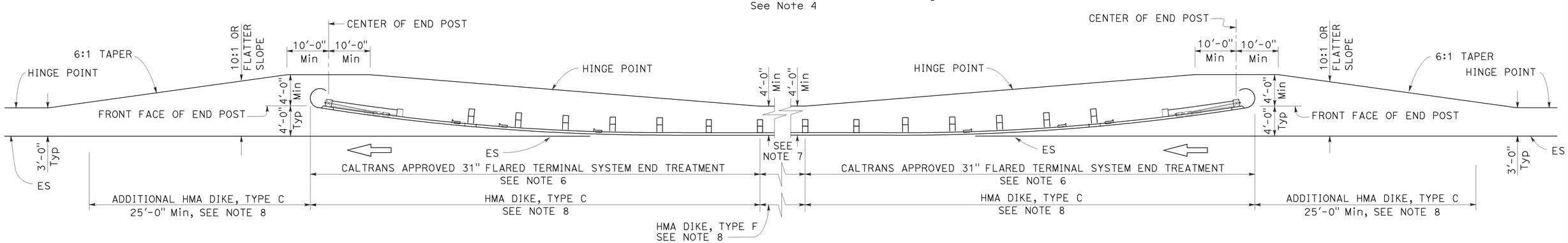

TYPE 11E LAYOUT

(Embankment MGS installation with
31" flared end treatment at each end of railing)
See Note 4

NOTES:

1. Line post, blocks and hardware to be used are shown on Revised Standard Plans RSP A77L1, RSP A77L2, RSP A77M1, RSP A77N1 and RSP A77N2.
2. MGS post spacing to be 6'-3" center to center, except as otherwise noted.
3. Except as noted, line posts are 6" x 8" x 6'-0" wood with 6" x 12" x 1'-2" wood blocks. W6 x 8.5 or W6 x 9 steel posts, 6'-0" in length, with 6" x 12" x 1'-2" notched wood blocks or plastic blocks may be used for 6" x 8" x 6'-0" wood post with 6" x 12" x 1'-2" wood blocks where applicable and when specified.
4. Layout Types 11D through 11L, shown on the A77P Series of Standard Plans, are typically used where MGS is recommended to shield embankment slopes and a crashworthy 31" end treatment is required for both directions of traffic.
5. 31" in-line terminal system end treatments are used where site conditions will not accommodate a flared end treatment.
6. The type of 31" terminal system end treatment to be used will be shown on the Project Plans.
7. Dependent on site conditions (embankment height and side slope), construction of additional MGS (length equal to multiples of 12'-6" with 6'-3" post spacing) may be advisable.
8. Where placement of dike is required with MGS installations, see Revised Standard Plan RSP A77N4 for dike positioning details.

STATE OF CALIFORNIA
DEPARTMENT OF TRANSPORTATION

MIDWEST GUARDRAIL SYSTEM TYPICAL LAYOUTS FOR EMBANKMENTS

NO SCALE

RSP A77P2 DATED JULY 19, 2013 SUPPLEMENTS THE STANDARD PLANS BOOK DATED 2010.

REVISED STANDARD PLAN RSP A77P2

Dist	COUNTY	ROUTE	POST MILES TOTAL PROJECT	SHEET No.	TOTAL SHEETS
08	SBd	38	15.0/49.5	39	50

Randell D. Hiatt
REGISTERED CIVIL ENGINEER

July 19, 2013
PLANS APPROVAL DATE

REGISTERED PROFESSIONAL ENGINEER
Randell D. Hiatt
No. C50200
Exp. 6-30-15
CIVIL
STATE OF CALIFORNIA

THE STATE OF CALIFORNIA OR ITS OFFICERS OR AGENTS SHALL NOT BE RESPONSIBLE FOR THE ACCURACY OR COMPLETENESS OF SCANNED COPIES OF THIS PLAN SHEET.

TO ACCOMPANY PLANS DATED _____

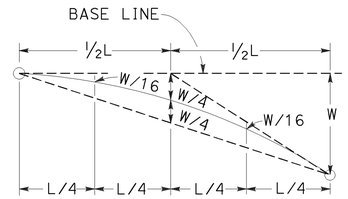

TYPICAL PARABOLIC LAYOUT

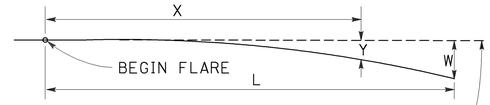

BASE LINE (EDGE OF PAVED SHOULDER OR OFFSET LINE OF EDGE OF TRAVELED WAY)

$$Y = \frac{WX^2}{L^2}$$

Y = OFFSET FROM BASE LINE
W = MAXIMUM OFFSET
X = DISTANCE ALONG BASE LINE
L = LENGTH OF FLARE

PARABOLIC FLARE OFFSETS

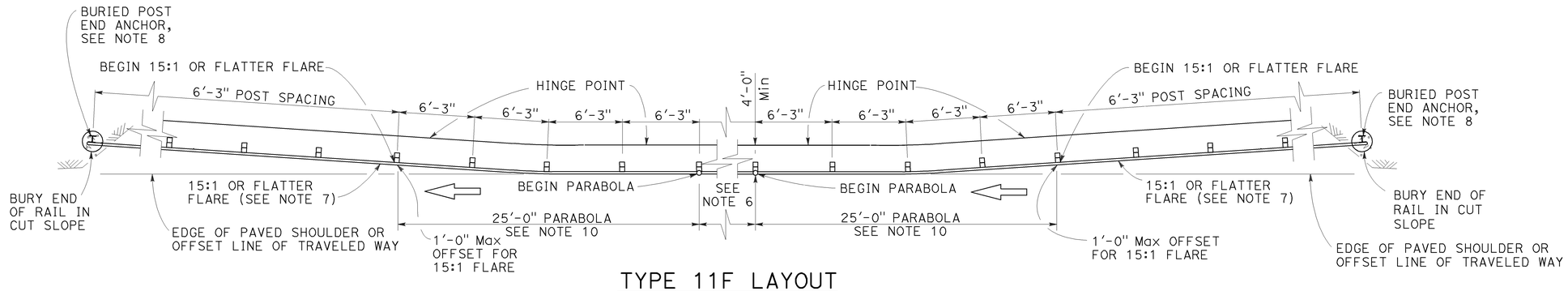

TYPE 11F LAYOUT

(Embankment MGS installation with a buried end anchor treatment at each end of railing)
See Notes 4 and 9

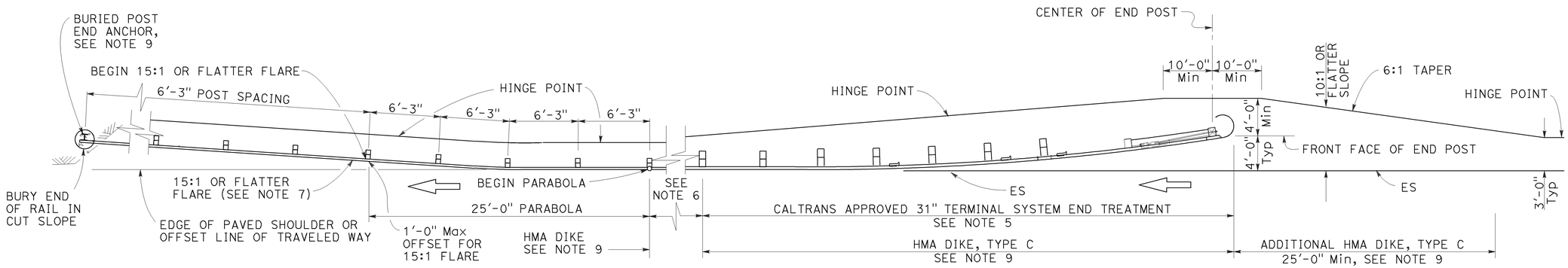

TYPE 11G LAYOUT

(Embankment MGS installation with 31" flared end treatment and a buried end anchor treatment at the ends of railing)
See Notes 4 and 9

NOTES:

1. Line post, blocks and hardware to be used are shown on Revised Standard Plans RSP A77L1, RSP A77L2, RSP A77M1, RSP A77N1 and RSP A77N2.
2. MGS post spacing to be 6'-3" center to center, except as otherwise noted.
3. Except as noted, line posts are 6" x 8" x 6'-0" wood with 6" x 12" x 1'-2" wood blocks. W6 x 8.5 or W6 x 9 steel posts, 6'-0" in length, with 6" x 12" x 1'-2" notched wood blocks or plastic blocks may be used for 6" x 8" x 6'-0" wood post with 6" x 12" x 1'-2" wood blocks where applicable and when specified.
4. Layout Types 11D through 11L, shown on the A77P Series of Standard Plans, are typically used where MGS is recommended to shield embankment slopes and a crashworthy 31" end treatment is required for both directions of traffic.
5. The type of 31" terminal system end treatment to be used will be shown on the Project Plans.
6. Dependent on site conditions (embankment height and side slope), construction of additional MGS (length equal to multiples of 12'-6" with 6'-3" post spacing) may be advisable.
7. The 15:1 or flatter flare used with buried end anchors is based on the edge of the paved shoulder or offset line of edge of the traveled way. The length of MGS within the 15:1 or flatter flare is based on site conditions and should be a length equal to multiples of 12'-6".
8. For details of the buried post end anchor used with Type 11F and 11G Layouts, see Revised Standard Plan RSP A77T2.
9. Where placement of dike is required with MGS installations, see Revised Standard Plan RSP A77N4 for dike positioning details.
10. For typical flare offsets for 25'-0" length parabola with maximum offset of 1'-0", see Revised Standard Plan RSP A77P1.

STATE OF CALIFORNIA
DEPARTMENT OF TRANSPORTATION

MIDWEST GUARDRAIL SYSTEM TYPICAL LAYOUTS FOR EMBANKMENTS

NO SCALE

RSP A77P3 DATED JULY 19, 2013 SUPPLEMENTS THE STANDARD PLANS BOOK DATED 2010.

REVISED STANDARD PLAN RSP A77P3

2010 REVISED STANDARD PLAN RSP A77P3

6-19-13

Dist	COUNTY	ROUTE	POST MILES TOTAL PROJECT	SHEET No.	TOTAL SHEETS
08	SBd	38	15.0/49.5	40	50

Randell D. Hiatt
REGISTERED CIVIL ENGINEER

July 19, 2013
PLANS APPROVAL DATE

REGISTERED PROFESSIONAL ENGINEER
Randell D. Hiatt
No. C50200
Exp. 6-30-15
CIVIL
STATE OF CALIFORNIA

THE STATE OF CALIFORNIA OR ITS OFFICERS OR AGENTS SHALL NOT BE RESPONSIBLE FOR THE ACCURACY OR COMPLETENESS OF SCANNED COPIES OF THIS PLAN SHEET.

TO ACCOMPANY PLANS DATED _____

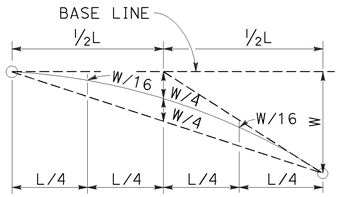

TYPICAL PARABOLIC LAYOUT

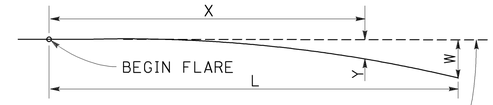

BASE LINE (EDGE OF PAVED SHOULDER OR OFFSET LINE OF EDGE OF TRAVELED WAY)

$$Y = \frac{WX^2}{L^2}$$

Y = OFFSET FROM BASE LINE
W = MAXIMUM OFFSET
X = DISTANCE ALONG BASE LINE
L = LENGTH OF FLARE

PARABOLIC FLARE OFFSETS

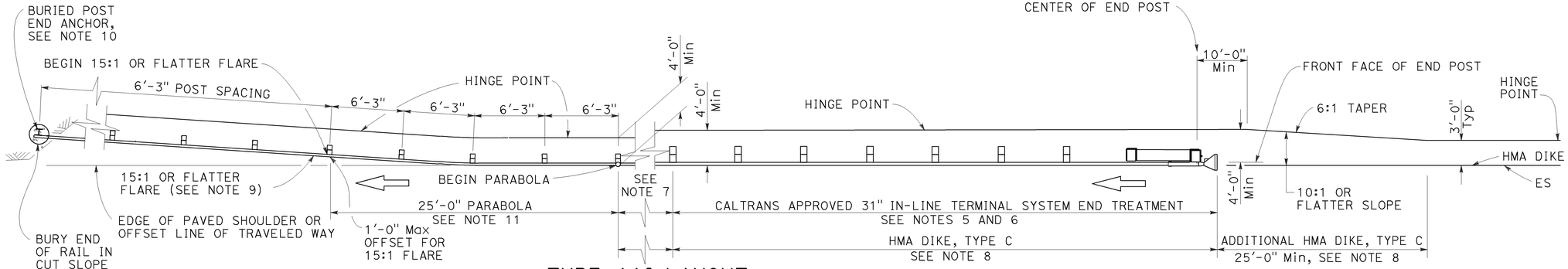

TYPE 11I LAYOUT

(Embankment MGS installation with 31" in-line end treatment and a buried end anchor treatment at the ends of railing)
See Note 4

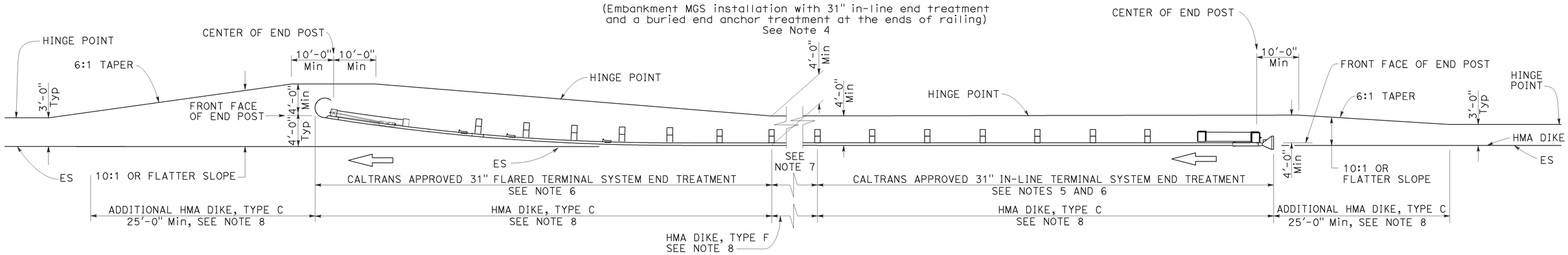

TYPE 11J LAYOUT

(Embankment MGS installation with 31" in-line end treatment and 31" flared end treatment at the ends of railing)
See Note 4

NOTES:

1. Line post, blocks and hardware to be used are shown on Revised Standard Plans RSP A77L1, RSP A77L2, RSP A77M1, RSP A77N1 and RSP A77N2.
2. MGS post spacing to be 6'-3" center to center, except as otherwise noted.
3. Except as noted, line posts are 6" x 8" x 6'-0" wood with 6" x 12" x 1'-2" wood blocks. W6 x 8.5 or W6 x 9 steel posts, 6'-0" in length, with 6" x 12" x 1'-2" notched wood blocks or plastic blocks may be used for 6" x 8" x 6'-0" wood post with 6" x 12" x 1'-2" wood blocks where applicable and when specified.
4. Layout Types 11D through 11L, shown on the A77P Series of Standard Plans, are typically used where MGS is recommended to shield embamkment slopes and a crashworthy 31" end treatment is required for both directions of traffic.
5. 31" in-line terminal system end treatments are used where site conditions will not accommodate a 31" flared end treatment.
6. The type of 31" terminal system end treatment to be used will be shown on the Project Plans.
7. Dependent on site conditions (embankment height and side slope), construction of additional MGS (length equal to multiples of 12'-6" with 6'-3" post spacing) may be advisable.
8. Where placement of dike is required with MGS installations, see Revised Standard Plan RSP A77N4 for dike positioning details.
9. The 15:1 or flatter flare used with buried end anchors is based on the edge of the paved shoulder or offset line of edge of the traveled way. The length of MGS within the 15:1 or flatter flare is based on site conditions and should be a length equal to multiples of 12'-6".
10. For details of the buried post end anchor used with Type 11I Layout, see Revised Standard Plan RSP A77T2.
11. For typical flare offsets for 25'-0" length parabola with maximum offset of 1'-0", see Revised Standard Plan RSP A77P1.

STATE OF CALIFORNIA
DEPARTMENT OF TRANSPORTATION

MIDWEST GUARDRAIL SYSTEM TYPICAL LAYOUTS FOR EMBANKMENTS

NO SCALE

RSP A77P5 DATED JULY 19, 2013 SUPPLEMENTS THE STANDARD PLANS BOOK DATED 2010.

REVISED STANDARD PLAN RSP A77P5

2010 REVISED STANDARD PLAN RSP A77P5

6-19-13

Dist	COUNTY	ROUTE	POST MILES TOTAL PROJECT	SHEET No.	TOTAL SHEETS
08	SBd	38	15.0/49.5	41	50

Randell D. Hiatt
REGISTERED CIVIL ENGINEER

July 19, 2013
PLANS APPROVAL DATE

REGISTERED PROFESSIONAL ENGINEER
Randell D. Hiatt
No. C50200
Exp. 6-30-15
CIVIL
STATE OF CALIFORNIA

THE STATE OF CALIFORNIA OR ITS OFFICERS OR AGENTS SHALL NOT BE RESPONSIBLE FOR THE ACCURACY OR COMPLETENESS OF SCANNED COPIES OF THIS PLAN SHEET.

TO ACCOMPANY PLANS DATED 12-16-13

2010 REVISED STANDARD PLAN RSP A77P6

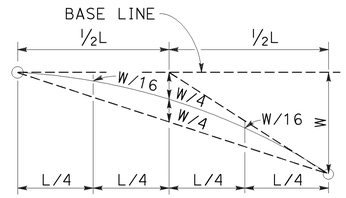

TYPICAL PARABOLIC LAYOUT

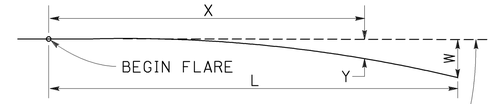

BASE LINE (EDGE OF PAVED SHOULDER OR OFFSET LINE OF EDGE OF TRAVELED WAY)

$$Y = \frac{WX^2}{L^2}$$

Y = OFFSET FROM BASE LINE
W = MAXIMUM OFFSET
X = DISTANCE ALONG BASE LINE
L = LENGTH OF FLARE

PARABOLIC FLARE OFFSETS

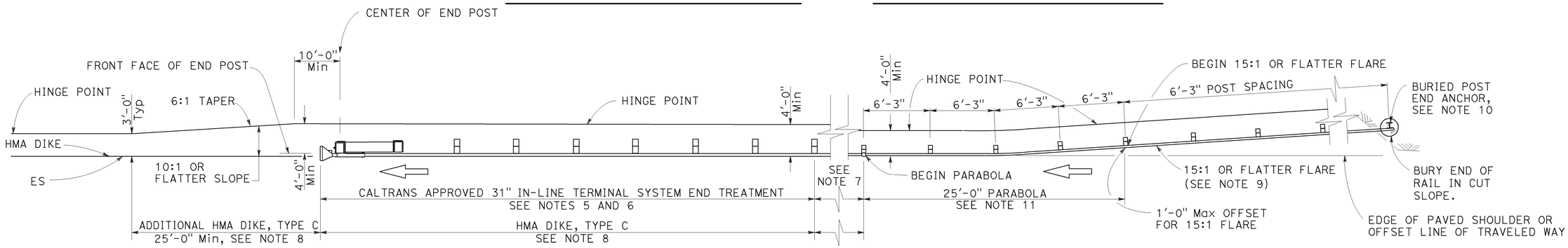

TYPE 11K LAYOUT

(Embankment MGS installation with a buried end anchor treatment and a 31" in-line end treatment at the ends of railing)
See Note 4

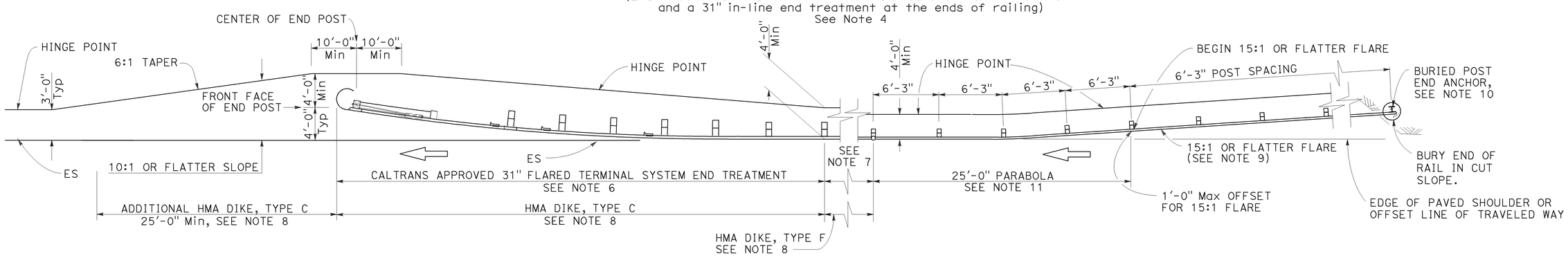

TYPE 11L LAYOUT

(Embankment MGS installation with a buried end anchor treatment and a 31" flared end treatment at the ends of railing)
See Note 4

NOTES:

1. Line post, blocks and hardware to be used are shown on Revised Standard Plans RSP A77L1, RSP A77L2, RSP A77M1, RSP A77N1 and RSP A77N2.
2. MGS post spacing to be 6'-3" center to center, except as otherwise noted.
3. Except as noted, line posts are 6" x 8" x 6'-0" wood with 6" x 12" x 1'-2" wood blocks. W6 x 8.5 or W6 x 9 steel posts, 6'-0" in length, with 6" x 12" x 1'-2" notched wood blocks or plastic blocks may be used for 6" x 8" x 6'-0" wood post with 6" x 12" x 1'-2" wood blocks where applicable and when specified.
4. Layout Types 11D through 11L, shown on the A77P Series of Standard Plans, are typically used where MGS is recommended to shield embamkment slopes and a crashworthy 31" end treatment is required for both directions of traffic.
5. 31" in-line terminal system end treatments are used where site conditions will not accommodate a 31" flared end treatment.
6. The type of 31" terminal system end treatment to be used will be shown on the Project Plans.
7. Dependent on site conditions (embankment height and side slope), construction of additional MGS (length equal to multiples of 12'-6" with 6'-3" post spacing) may be advisable.
8. Where placement of dike is required with MGS installations, see Revised Standard Plan RSP A77N4 for dike positioning details.
9. The 15:1 or flatter flare used with buried end anchors is based on the edge of the paved shoulder or offset line of edge of the traveled way. The length of MGS within the 15:1 or flatter flare is based on site conditions and should be a length equal to multiples of 12'-6".
10. For details of the buried post end anchor used with Type 11K and 11L Layouts, see Revised Standard Plan RSP A77T2.
11. For typical flare offsets for 25'-0" length parabola with maximum offset of 1'-0", see Revised Standard Plan RSP A77P1.

STATE OF CALIFORNIA
DEPARTMENT OF TRANSPORTATION

MIDWEST GUARDRAIL SYSTEM TYPICAL LAYOUTS FOR EMBANKMENTS

NO SCALE

RSP A77P6 DATED JULY 19, 2013 SUPPLEMENTS THE STANDARD PLANS BOOK DATED 2010.

REVISED STANDARD PLAN RSP A77P6

6-19-13

Dist	COUNTY	ROUTE	POST MILES TOTAL PROJECT	SHEET No.	TOTAL SHEETS
08	SBd	38	15.0/49.5	42	50

Randell D. Hiatt
REGISTERED CIVIL ENGINEER

July 19, 2013
PLANS APPROVAL DATE

REGISTERED PROFESSIONAL ENGINEER
Randell D. Hiatt
No. C50200
Exp. 6-30-15
CIVIL
STATE OF CALIFORNIA

THE STATE OF CALIFORNIA OR ITS OFFICERS OR AGENTS SHALL NOT BE RESPONSIBLE FOR THE ACCURACY OR COMPLETENESS OF SCANNED COPIES OF THIS PLAN SHEET.

TO ACCOMPANY PLANS DATED 12-16-13

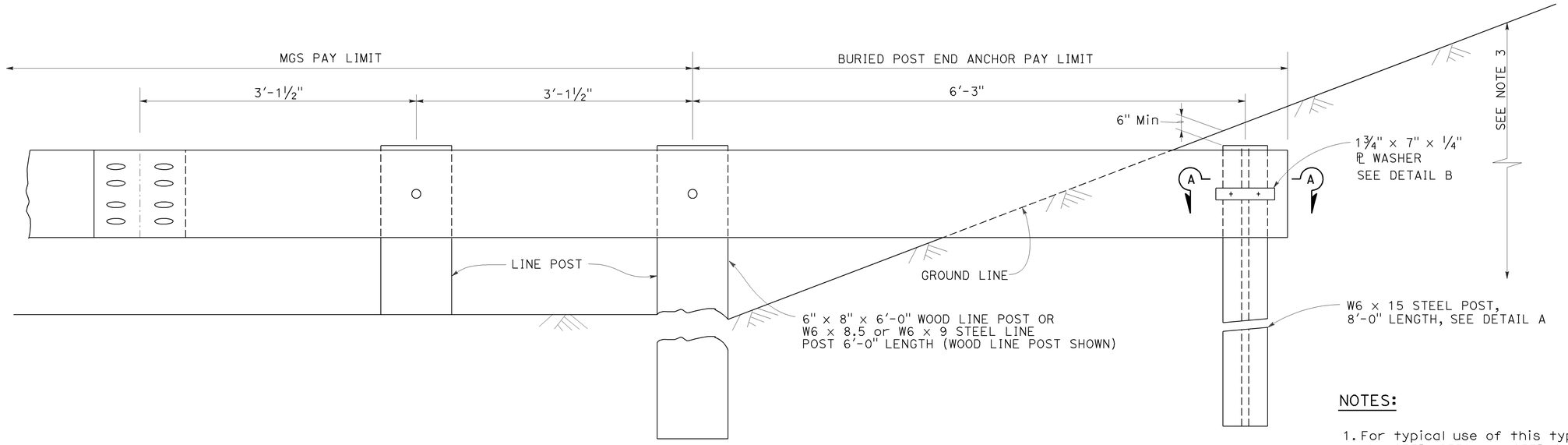

BURIED POST END ANCHOR

See Note 3

NOTES:

1. For typical use of this type of end anchor with MGS see the A77P, A77Q and A77R Series of the Standard Plans.
2. Holes excavation in the slope to construct the buried post end anchor shall be backfilled with selected earth, placed in layers approximately 1'-0" thick. Each layer shall be moistened and thoroughly compacted.
3. The buried post end anchor shall only be constructed at those locations where the slope perpendicular to the roadway is non-traversable.

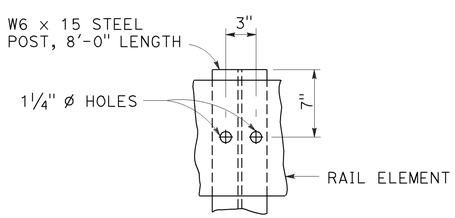

DETAIL A

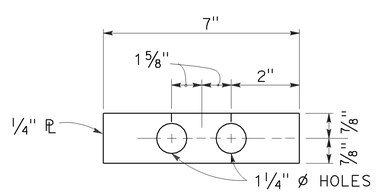

DETAIL B

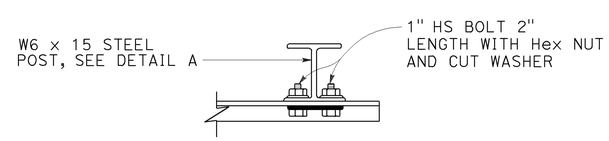

SECTION A-A

STATE OF CALIFORNIA
DEPARTMENT OF TRANSPORTATION

MIDWEST GUARDRAIL SYSTEM BURIED POST END ANCHOR

NO SCALE

RSP A77T2 DATED JULY 19, 2013 SUPPLEMENTS THE STANDARD PLANS BOOK DATED 2010.

REVISED STANDARD PLAN RSP A77T2

2010 REVISED STANDARD PLAN RSP A77T2

7-3-13

Dist	COUNTY	ROUTE	POST MILES TOTAL PROJECT	SHEET No.	TOTAL SHEETS
08	SBd		15.0/49.5	43	50

Randell D. Hiatt
REGISTERED CIVIL ENGINEER

July 19, 2013
PLANS APPROVAL DATE

REGISTERED PROFESSIONAL ENGINEER
Randell D. Hiatt
No. C50200
Exp. 6-30-15
CIVIL
STATE OF CALIFORNIA

THE STATE OF CALIFORNIA OR ITS OFFICERS OR AGENTS SHALL NOT BE RESPONSIBLE FOR THE ACCURACY OR COMPLETENESS OF SCANNED COPIES OF THIS PLAN SHEET.

TO ACCOMPANY PLANS DATED 12-16-13

NOTES:

1. Refer to Revised Standard Plans RSP A77L1 and RSP A77L2 for component details for MGS not shown on this plan.
2. All posts for any standard barrier run shall be of the same type: Wood or Steel.
3. Install posts in soil.

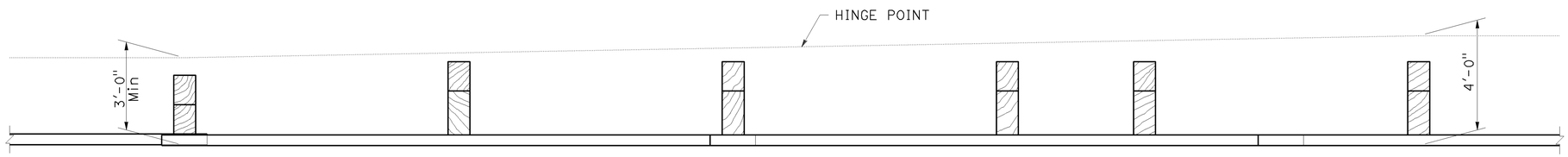

PLAN

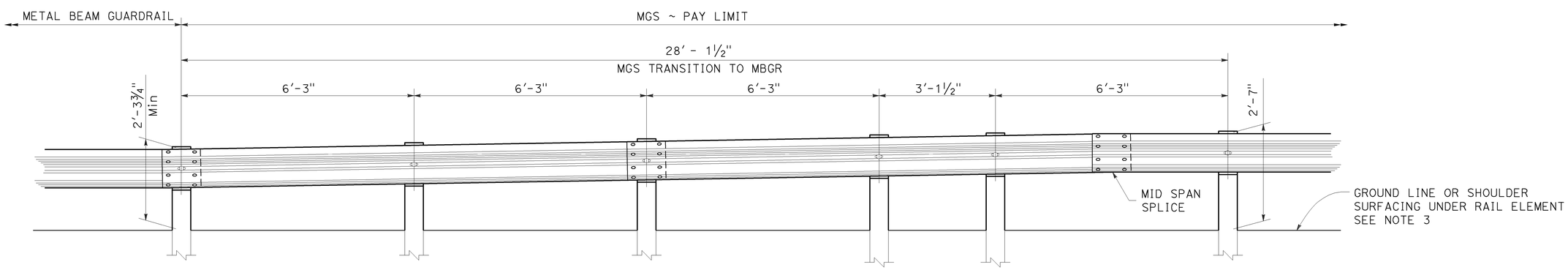

ELEVATION

STATE OF CALIFORNIA
DEPARTMENT OF TRANSPORTATION

MIDWEST GUARDRAIL SYSTEM TRANSITION TO METAL BEAM GUARDRAIL

NO SCALE

RSP A77U5 DATED JULY 19, 2013 SUPPLEMENTS THE STANDARD PLANS BOOK DATED 2010.

REVISED STANDARD PLAN RSP A77U5

2010 REVISED STANDARD PLAN RSP A77U5

6-20-13

Dist	COUNTY	ROUTE	POST MILES TOTAL PROJECT	SHEET No.	TOTAL SHEETS
08	SBd	38	15.0/49.5	44	50

Theresa Gabriel
REGISTERED ELECTRICAL ENGINEER

July 19, 2013
PLANS APPROVAL DATE

REGISTERED PROFESSIONAL ENGINEER Theresa Aziz Gabriel No. E15129 Exp. 6-30-14 ELECTRICAL STATE OF CALIFORNIA

THE STATE OF CALIFORNIA OR ITS OFFICERS OR AGENTS SHALL NOT BE RESPONSIBLE FOR THE ACCURACY OR COMPLETENESS OF SCANNED COPIES OF THIS PLAN SHEET.

TO ACCOMPANY PLANS DATED 12-16-13

LEGEND:

AB	ABANDON. IF APPLIED TO CONDUIT, REMOVE CONDUCTORS
BC	INSTALL PULL BOX IN EXISTING CONDUIT RUN
BP	PEDESTRIAN BARRICADE, TYPE AS INDICATED ON PLAN
CB	INSTALL CONDUIT INTO EXISTING PULL BOX
CC	CONNECT NEW AND EXISTING CONDUIT. REMOVE EXISTING CONDUCTORS AND INSTALL CONDUCTORS AS INDICATED
CF	CONDUIT TO REMAIN FOR FUTURE USE. REMOVE CONDUCTORS. INSTALL PULL TAPE
DH	DETECTOR HANDHOLE
FA	FOUNDATION TO BE ABANDONED
IS	INSTALL SIGN ON SIGNAL MAST ARM
NS	NO SLIP BASE ON STANDARD
PEC	PHOTOELECTRIC CONTROL
PEU	PHOTOELECTRIC UNIT
RC	EQUIPMENT OR MATERIAL TO BE REMOVED AND BECOME THE PROPERTY OF THE CONTRACTOR
RE	REMOVE ELECTROLIER, FUSES AND BALLAST. TAPE ENDS OF CONDUCTORS
RL	RELOCATE EQUIPMENT
RR	REMOVE AND REUSE EQUIPMENT
RS	REMOVE AND SALVAGE EQUIPMENT
SC	SPLICE NEW TO EXISTING CONDUCTORS
SD	SERVICE DISCONNECT
TSP	TELEPHONE SERVICE POINT

ABBREVIATIONS

APS	ACCESSIBLE PEDESTRIAN SIGNAL
BBS	BATTERY BACKUP SYSTEM
BC	BOLT CIRCLE
BPB	BICYCLE PUSH BUTTON
C	CONDUIT
CB	CIRCUIT BREAKER
CCTV	CLOSED CIRCUIT TELEVISION
Ckt	CIRCUIT
CMS	CHANGEABLE MESSAGE SIGN
Ctid	CALTRANS IDENTIFICATION
Comm	COMMUNICATION
DLC	LOOP DETECTOR LEAD-IN CABLE
EMS	EXTINGUISHABLE MESSAGE SIGN
EVUC	EMERGENCY VEHICLE UNIT CABLE
EVUD	EMERGENCY VEHICLE UNIT DETECTOR
FB	FLASHING BEACON
FBCA	FLASHING BEACON CONTROL ASSEMBLY
FBS	FLASHING BEACON WITH SLIP BASE
FO	FIBER OPTIC
G	EQUIPMENT GROUNDING CONDUCTOR
GB	GROUND BUS
GFCI	GROUND FAULT CIRCUIT INTERRUPTER
HAR	HIGHWAY ADVISORY RADIO
Hex	HEXAGONAL
HPS	HIGH PRESSURE SODIUM
IISNS	INTERNALLY ILLUMINATED STREET NAME SIGN
ISL	INDUCTION SIGN LIGHTING
LED	LIGHT EMITTING DIODE
LMA	LUMINAIRE MAST ARM
LPS	LOW PRESSURE SODIUM
Ltg	LIGHTING
Lum	LUMINAIRE
M	METERED
MAT	MAST ARM MOUNTING TOP ATTACHMENT
MAS	MAST ARM MOUNTING SIDE ATTACHMENT
M/M	MULTIPLE TO MULTIPLE TRANSFORMER
Mtg	MOUNTING
MV	MERCURY VAPOR LIGHTING FIXTURE
MVDS	MICROWAVE VEHICLE DETECTION SYSTEM
N	NEUTRAL (GROUNDED CONDUCTOR)
NB	NEUTRAL BUS
NC	NORMALLY CLOSE
NO	NORMALLY OPEN
P	CIRCUIT BREAKER'S POLE
PB	PULL BOX
PBA	PUSH BUTTON ASSEMBLY
PEC	PHOTOELECTRIC CONTROL
Ped	PEDESTRIAN
PEU	PHOTOELECTRIC UNIT
PT	CONDUIT WITH PULL TAPE
RE	RELOCATED EQUIPMENT
RM	RAMP METERING
RWIS	ROADSIDE WEATHER INFORMATION SYSTEM
SB	SLIP BASE
SIC	SIGNAL INTERCONNECT CABLE
Sig	SIGNAL
SMA	SIGNAL MAST ARM
SNS	STREET NAME SIGN
SP	SERVICE POINT
TDC	TELEPHONE DEMARCATION CABINET
TMS	TRAFFIC MONITORING STATION
TOS	TRAFFIC OPERATIONS SYSTEM
Veh	VEHICLE
VIVDS	VIDEO IMAGE VEHICLE DETECTION SYSTEM
WIM	WEIGH-IN-MOTION
Xfmr	TRANSFORMER

SOFFIT AND WALL MOUNTED LUMINAIRES

PENDANT, 70 W HPS UNLESS OTHERWISE SPECIFIED

FLUSH, 70 W HPS UNLESS OTHERWISE SPECIFIED

WALL SURFACE, 70 W HPS UNLESS OTHERWISE SPECIFIED

EXISTING SOFFIT OR WALL LUMINAIRE TO REMAIN UNMODIFIED

EXISTING SOFFIT OR WALL LUMINAIRE TO BE MODIFIED AS SPECIFIED

NOTE:

Arrow indicates "street side" of luminaire.

COMMONLY USED SYMBOLS FOR UNITED STATES CUSTOMARY UNITS OF MEASUREMENT:

SYMBOL USED	DEFINITIONS
Ω	OHMS
min	MINUTE
s	SECOND
bps	BITS PER SECOND
Bps	BYTES PER SECOND
A	AMPERE
V	VOLT
V(dc)	VOLT (DIRECT CURRENT)
V(ac)	VOLT (ALTERNATING CURRENT)
FC	FOOT - CANDLE
W	WATTS
VA	VOLT-AMPERE
M	MEGA
k	KILO
m	MILLI
μ	MICRO
P	PICO
Hz	HERTZ

MISCELLANEOUS ELECTROLIERS

NEW	EXISTING	
		LUMINAIRE ON WOOD POLE
		NON-STANDARD ELECTROLIER (SEE PROJECT NOTES OR PROJECT PLANS)
		CITY ELECTROLIER
		ELECTROLIER FOUNDATION (FUTURE INSTALLATION)

NOTES:

1. HPS luminaires shall be 310 W HPS when installed on Type 21, 21D, 30, 31 and 32 Standards, unless otherwise specified. HPS luminaires shall be 200 W when installed on other type standards or poles, unless otherwise specified.
2. LED luminaires shall be 235 W when installed on Type 21, 21D, 30, 31 and 32 Standards, unless otherwise specified. LED luminaires shall be 165 W when installed on other type standards or poles, unless otherwise specified.
3. Luminaires shall be the cutoff type, ANSI Type III medium cutoff lighting distribution, unless otherwise specified.

STANDARD ELECTROLIER

NEW	EXISTING	STANDARD TYPE
		15
		15D
		15 STRUCTURE
		15D STRUCTURE
		21
		21D
		21 STRUCTURE
		21D STRUCTURE
		30
		31
		32

STATE OF CALIFORNIA
DEPARTMENT OF TRANSPORTATION

ELECTRICAL SYSTEMS (LEGEND AND ABBREVIATIONS)

NO SCALE

RSP ES-1A DATED JULY 19, 2013 SUPERSEDES STANDARD PLAN ES-1A DATED MAY 20, 2011 - PAGE 425 OF THE STANDARD PLANS BOOK DATED 2010.

REVISED STANDARD PLAN RSP ES-1A

2010 REVISED STANDARD PLAN RSP ES-1A

Dist	COUNTY	ROUTE	POST MILES TOTAL PROJECT	SHEET No.	TOTAL SHEETS
08	SBd	38	15.0/49.5	45	50

Theresa Gabriel
REGISTERED ELECTRICAL ENGINEER

July 19, 2013
PLANS APPROVAL DATE

REGISTERED PROFESSIONAL ENGINEER
Theresa Aziz Gabriel
No. E15129
Exp. 6-30-14
ELECTRICAL
STATE OF CALIFORNIA

THE STATE OF CALIFORNIA OR ITS OFFICERS OR AGENTS SHALL NOT BE RESPONSIBLE FOR THE ACCURACY OR COMPLETENESS OF SCANNED COPIES OF THIS PLAN SHEET.

TO ACCOMPANY PLANS DATED 12-16-13

CONDUIT

NEW	EXISTING	
		LIGHTING CONDUIT, UNLESS OTHERWISE INDICATED OR NOTED
		TRAFFIC SIGNAL CONDUIT
C	c	COMMUNICATION CONDUIT
T	t	TELEPHONE CONDUIT
F	f	FIRE ALARM CONDUIT
FO	fo	FIBER OPTIC CONDUIT
		CONDUIT TERMINATION
R	r	CONDUIT RISER ATTACHED TO THE STRUCTURE OR SERVICE POLE

SERVICE EQUIPMENT

NEW	EXISTING	
OH	oh	OVERHEAD LINES
U	U	WOOD POLE, "U" INDICATES UTILITY OWNED
		POLE GUY WITH ANCHOR
		UTILITY TRANSFORMER - GROUND MOUNTED
III	III	SERVICE EQUIPMENT ENCLOSURE TYPE. DOOR INDICATES FRONT OF ENCLOSURE
T	t	TELEPHONE DEMARCATION CABINET

POLE-MOUNTED SERVICE DESIGNATION

TYPE H SERVICE, 28'-10" — TYPE OF INSTALLATION AND POLE HEIGHT ABOVE GRADE

FLASHING BEACON

NEW	EXISTING	
R	R	FLASHING BEACON (ONE VEHICLE SIGNAL HEAD WITH BACKPLATE AND VISOR) "R" INDICATES RED INDICATION, "Y" INDICATES YELLOW INDICATION
Y Y	Y Y	FLASHING BEACON WITH TYPE 15-FBS STANDARD AND A SIGN.
R R	R R	FLASHING BEACON WITH TYPES 9, 9A OR 9B SIGN UNLESS OTHERWISE SPECIFIED OR INDICATED

SIGNAL EQUIPMENT

NEW	EXISTING	
C	C	PEDESTRIAN SIGNAL HEAD "C" INDICATES COUNTDOWN PEDESTRIAN HEAD
		PUSH BUTTON ASSEMBLY POST
		PEDESTRIAN BARRICADE
		VEHICLE SIGNAL HEAD (WITH BACKPLATE AND 3-SECTIONS: RED, YELLOW AND GREEN)
		VEHICLE SIGNAL HEAD WITH ANGLE VISOR
PV	PV	MODIFICATIONS OF BASIC SYMBOL: "L" INDICATES ALL NON-ARROW SECTIONS LOUVERED "LG" INDICATES LOUVERED GREEN SECTION ONLY "PV" INDICATES ALL 12" SECTIONS PROGRAMMED VISIBILITY "8" INDICATES ALL 8" SECTIONS (ONLY WHEN SPECIFIED)
		VEHICLE SIGNAL HEAD CONSISTING OF RED, YELLOW AND GREEN LEFT ARROW SECTIONS
		VEHICLE SIGNAL HEAD CONSISTING OF RED AND YELLOW SECTIONS WITH AN UP GREEN ARROW SECTION
		VEHICLE SIGNAL HEAD (5 SECTION) CONSISTING OF RED, YELLOW AND GREEN SECTIONS WITH YELLOW AND GREEN RIGHT ARROW SECTIONS
		TYPE 15TS STANDARD WITH VEHICLE SIGNAL HEAD AND LUMINAIRE
		TYPE 21TS STANDARD WITH VEHICLE SIGNAL HEAD AND LUMINAIRE
		STANDARD WITH LUMINAIRE AND SIGNAL MAST ARMS AND ATTACHED VEHICLE SIGNAL HEADS
		TYPE 1 STANDARD WITH ATTACHED VEHICLE SIGNAL HEADS
		STANDARD WITH A SIGNAL MAST ARM, ATTACHED VEHICLE SIGNAL HEADS AND INTERNALLY ILLUMINATED STREET NAME SIGN
		CONTROLLER ASSEMBLY. DOOR INDICATES FRONT OF CABINET

SIGNAL EQUIPMENT Cont

NEW	EXISTING	
		GUARD POST
		TYPE 1 STANDARD WITH RAMP METERING SIGN
		OPTICAL DETECTOR FOR THE EMERGENCY VEHICLE DETECTION SYSTEM

NOTES:

1. All signal sections shall be 12" unless shown otherwise.
2. Signal heads shall be provided with backplates unless shown otherwise.

ILLUMINATED OVERHEAD SIGN

NEW	EXISTING	
		SINGLE POST, SINGLE ILLUMINATED SIGN, BALANCED BUTTERFLY
		SINGLE POST, DOUBLE ILLUMINATED SIGN, BALANCED BUTTERFLY
		SINGLE POST, SINGLE ILLUMINATED SIGN, FULL CANTILEVER
		DOUBLE POST, SINGLE ILLUMINATED SIGN
		SINGLE ILLUMINATED SIGN MOUNTED ON STRUCTURE
		DOUBLE POST, SINGLE ILLUMINATED SIGN WITH ELECTROLIER

STATE OF CALIFORNIA
DEPARTMENT OF TRANSPORTATION

ELECTRICAL SYSTEMS (LEGEND AND ABBREVIATIONS)

NO SCALE

RSP ES-1B DATED JULY 19, 2013 SUPERSEDES STANDARD PLAN ES-1B DATED MAY 20, 2011 - PAGE 426 OF THE STANDARD PLANS BOOK DATED 2010.

REVISED STANDARD PLAN RSP ES-1B

2010 REVISED STANDARD PLAN RSP ES-1B

7-15-13

Dist	COUNTY	ROUTE	POST MILES TOTAL PROJECT	SHEET No.	TOTAL SHEETS
08	SBd	38	15.0/49.5	46	50

Theresa Gabriel
REGISTERED ELECTRICAL ENGINEER

July 19, 2013
PLANS APPROVAL DATE

REGISTERED PROFESSIONAL ENGINEER
Theresa Aziz Gabriel
No. E15129
Exp. 6-30-14
ELECTRICAL
STATE OF CALIFORNIA

THE STATE OF CALIFORNIA OR ITS OFFICERS OR AGENTS SHALL NOT BE RESPONSIBLE FOR THE ACCURACY OR COMPLETENESS OF SCANNED COPIES OF THIS PLAN SHEET.

TO ACCOMPANY PLANS DATED 12-16-13

EQUIPMENT IDENTIFICATION

ILLUMINATED SIGN IDENTIFICATION NUMBER:

SIGN No. 12345
10 ISL SCI 1.0

- SIGN NUMBER - PLACE ON POST OR STRUCTURE
- TRANSFORMER RATING (kVA)
- LIGHTING CONTROL TYPE
- NUMBER AND TYPE OF FIXTURES

DO NOT PLACE ON STANDARD OR STRUCTURE

ELECTROLIER OR EQUIPMENT IDENTIFICATION NUMBER:

12345 - 15'-0"

- MAST ARM LENGTH, IF SHOWN. DO NOT PLACE ON STANDARD OR STRUCTURE
- EQUIPMENT NUMBER - PLACE ON STANDARD OR STRUCTURE. EXISTING EQUIPMENT NUMBERS ARE SHOWN IN PARENTHESIS

CONDUIT AND CONDUCTOR IDENTIFICATION:

1½"C, 2#10, 15#14, 2 DLC, 12P#18

- PAIR
- NUMBER AND SIZE OF CONDUCTORS AND CABLES
- SIZE OF CONDUIT IN INCHES

ø1, ø2, ø2P, etc.	TRAFFIC PHASE IDENTIFICATION FOR SIGNAL FACES, DETECTORS AND PHASE DIAGRAMS
1 2 3	LEGEND NUMBERS
A B C	EQUIPMENT, SIGNAL POLES, INSTALLATION OR ITEMS
1 2 3	CONDUIT RUN NUMBERS

SIGNAL AND LIGHTING STANDARD (TYPICAL DESIGNATION):

19A - 3 - 100

- WIND VELOCITY = 100 mph
- CASE 3 ARM LOADING
- STANDARD TYPE
- STANDARD PLAN SHEET NUMBER
- DETAIL, NUMBER, SECTION, TYPE OR ELEVATION

MISCELLANEOUS EQUIPMENT

NEW	EXISTING	
CMS	cms	CHANGEABLE MESSAGE SIGN
		CLOSED CIRCUIT TELEVISION CAMERA
		HIGHWAY ADVISORY RADIO POLE AND ANTENNA
EMS	ems	EXTINGUISHABLE MESSAGE SIGN
M V	m v	DETECTION DEVICE M = MICROWAVE SENSOR V = VIDEO IMAGE SENSOR

WIRING DIAGRAM LEGEND

----	EXTERNAL CONDUCTOR
———	CONDUCTOR OR BUS
	TIE POINT
	CONTACTOR COIL
	CONTACTOR, NO CONTACT
	TERMINAL BLOCKS
	CONTACTOR, NC CONTACT
	ENCLOSURE BOND
	GROUNDING ELECTRODE
	CIRCUIT BREAKER
	RECEPTACLE

PULL BOXES

NEW	EXISTING	
		PULL BOX, No. 5 UNLESS OTHERWISE INDICATED OR NOTED
3	9A(21)	PULL BOX, ADDITIONAL DESIGNATIONS OR DESCRIPTIONS

3 No. 3½ PULL BOX
5 No. 5 PULL BOX
6 No. 6 PULL BOX
7 No. 7 (CEILING PULL BOX)
8 No. 8 (PENDANT SOFFIT PULL BOX)
9 No. 9 PULL BOX
9A No. 9A PULL BOX

(C) COMMUNICATIONS PULL BOX
(E) PULL BOX WITH EXTENSION
(S) SPRINKLER CONTROL PULL BOX
(21) ANCHOR BOLTS AND CONDUIT FOR FUTURE INSTALLATION OF TYPE 21 STANDARD
(T) TRAFFIC PULL BOX

VEHICLE DETECTORS

5 J 9 U

- VEHICLE DETECTOR DESIGNATION
- U = UPPER
  L = LOWER
- SLOT NUMBER IN INPUT FILE
- INPUT FILE (I OR J)
- PHASE

NEW	EXISTING	
		TYPE A DETECTOR LOOP. OUTLINE OF SAWCUT SHOWN
		TYPE B DETECTOR LOOP. OUTLINE OF SAWCUT SHOWN
		TYPE C DETECTOR LOOP. OUTLINE OF SAWCUT SHOWN
		TYPE D DETECTOR LOOP. OUTLINE OF SAWCUT SHOWN
		TYPE E DETECTOR LOOP. OUTLINE OF SAWCUT SHOWN
		TYPE Q DETECTOR LOOP. OUTLINE OF SAWCUT SHOWN
		MAGNETIC DETECTOR
DH	dh	DETECTOR HANDHOLE
		MICROWAVE OR VIDEO DETECTION ZONE

STATE OF CALIFORNIA
DEPARTMENT OF TRANSPORTATION

ELECTRICAL SYSTEMS (LEGEND AND ABBREVIATIONS)

NO SCALE

RSP ES-1C DATED JULY 19, 2013 SUPERSEDES STANDARD PLAN ES-1C DATED MAY 20, 2011 - PAGE 427 OF THE STANDARD PLANS BOOK DATED 2010.

REVISED STANDARD PLAN RSP ES-1C

2010 REVISED STANDARD PLAN RSP ES-1C

7-11-13

Dist	COUNTY	ROUTE	POST MILES TOTAL PROJECT	SHEET No.	TOTAL SHEETS
08	SBd	38	15.0/49.5	47	50

Theresa Gabriel
REGISTERED ELECTRICAL ENGINEER

July 19, 2013
PLANS APPROVAL DATE

REGISTERED PROFESSIONAL ENGINEER
Theresa Aziz Gabriel
No. E15129
Exp. 6-30-14
ELECTRICAL
STATE OF CALIFORNIA

THE STATE OF CALIFORNIA OR ITS OFFICERS OR AGENTS SHALL NOT BE RESPONSIBLE FOR THE ACCURACY OR COMPLETENESS OF SCANNED COPIES OF THIS PLAN SHEET.

TO ACCOMPANY PLANS DATED 12-16-13

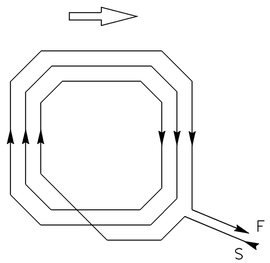

WINDING DETAIL

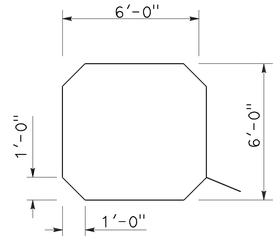

SAWCUT DETAIL

TYPE A LOOP DETECTOR CONFIGURATION

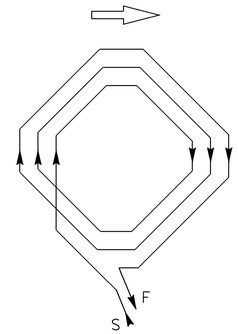

WINDING DETAIL

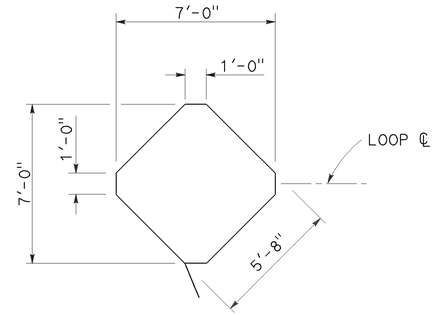

SAWCUT DETAIL

TYPE B LOOP DETECTOR CONFIGURATION

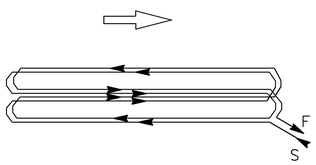

WINDING DETAIL

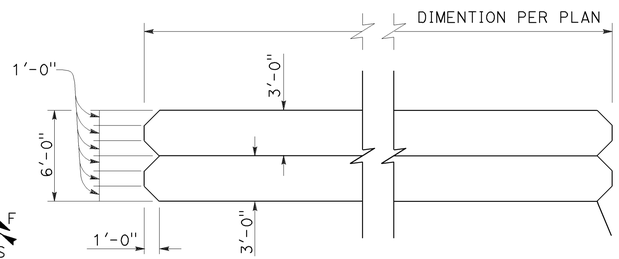

SAWCUT DETAIL

TYPE C LOOP DETECTOR CONFIGURATION

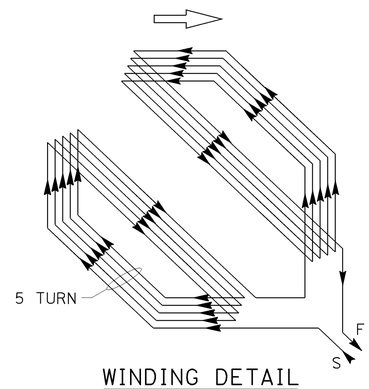

WINDING DETAIL

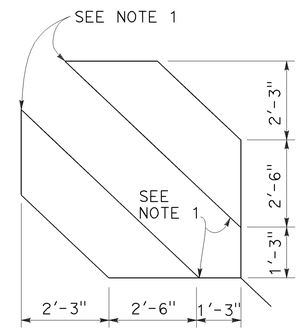

SAWCUT DETAIL

TYPE D LOOP DETECTOR CONFIGURATION

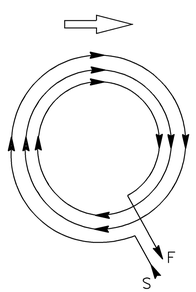

WINDING DETAIL

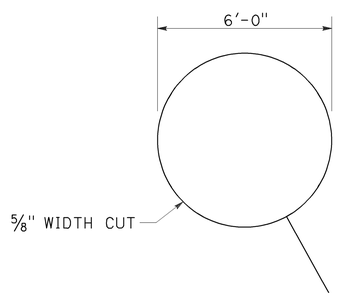

SAWCUT DETAIL

TYPE E LOOP DETECTOR CONFIGURATION

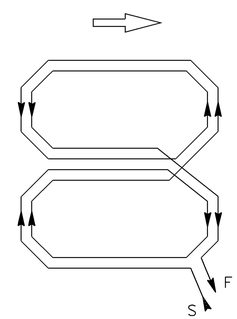

WINDING DETAIL

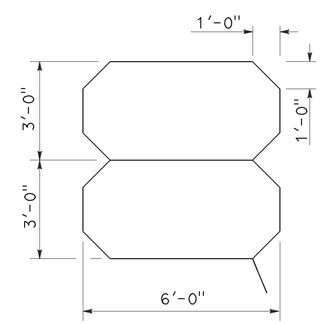

SAWCUT DETAIL

TYPE Q LOOP DETECTOR CONFIGURATION

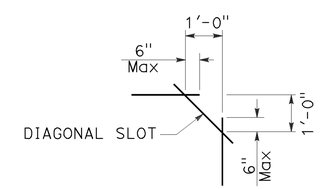

PLAN VIEW OF DIAGONAL SLOT AT CORNERS

NOTES:

1. Round corners of acute angle sawcuts to prevent damage to conductors.
2. Typical distance separating loops from edge to edge is 10' for Type A, B, D and E installation in single lane.

STATE OF CALIFORNIA
DEPARTMENT OF TRANSPORTATION

ELECTRICAL SYSTEMS (DETECTORS)

NO SCALE

RSP ES-5B DATED JULY 19, 2013 SUPERSEDES STANDARD PLAN ES-5B DATED MAY 20, 2011 - PAGE 449 OF THE STANDARD PLANS BOOK DATED 2010.

REVISED STANDARD PLAN RSP ES-5B

2010 REVISED STANDARD PLAN RSP ES-5B

7-9-13

Dist	COUNTY	ROUTE	POST MILES TOTAL PROJECT	SHEET No.	TOTAL SHEETS
08	SBd	38	15.0/49.5	48	50

Theresa Gabriel
REGISTERED ELECTRICAL ENGINEER

July 19, 2013
PLANS APPROVAL DATE

REGISTERED PROFESSIONAL ENGINEER Theresa Aziz Gabriel No. E15129 Exp. 6-30-14 ELECTRICAL STATE OF CALIFORNIA

THE STATE OF CALIFORNIA OR ITS OFFICERS OR AGENTS SHALL NOT BE RESPONSIBLE FOR THE ACCURACY OR COMPLETENESS OF SCANNED COPIES OF THIS PLAN SHEET.

TO ACCOMPANY PLANS DATED 12-16-13

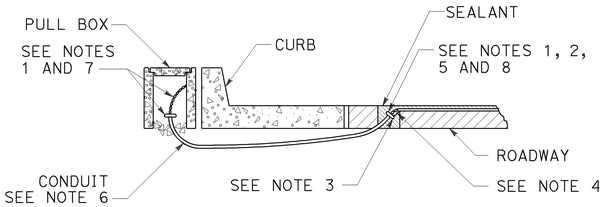

TYPE A
CURB TERMINATION DETAIL

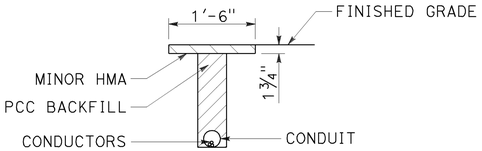

"T" TRENCH
DETAIL T

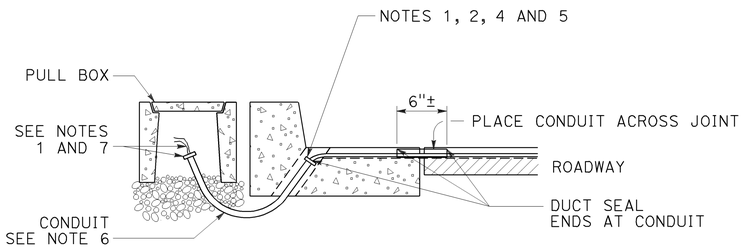

CROSS SECTION

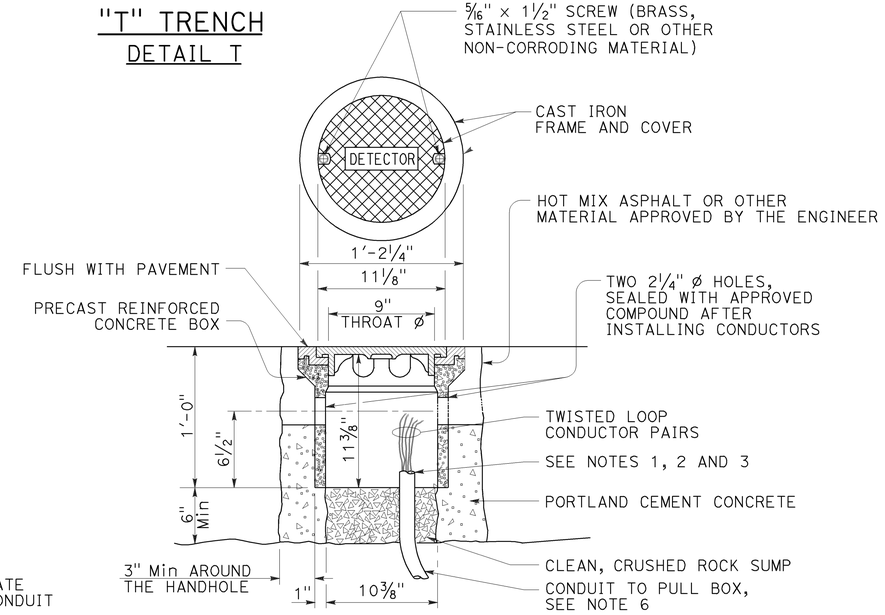

DETECTOR HANDHOLE DETAIL

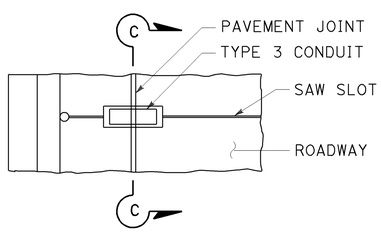

PLAN VIEW

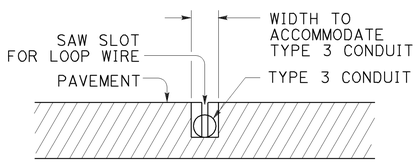

SECTION C-C

TYPE B
CURB TERMINATION DETAIL

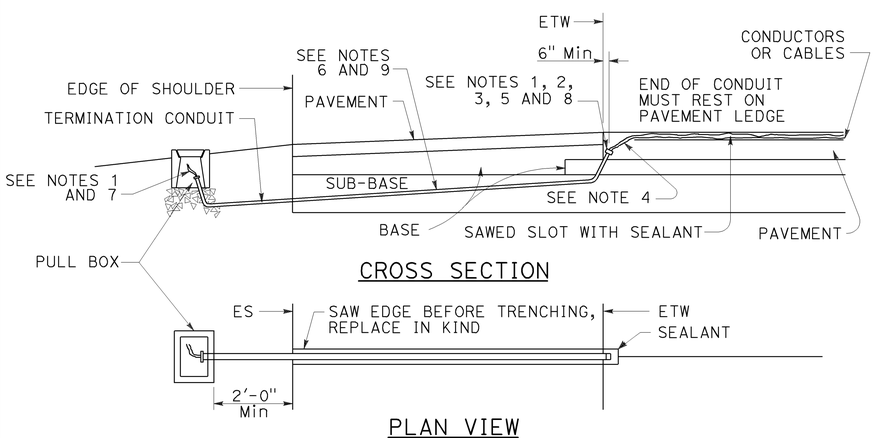

CROSS SECTION

PLAN VIEW

SHOULDER TERMINATION DETAILS

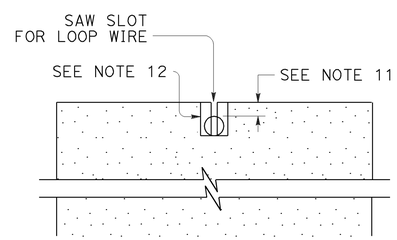

SECTION A-A

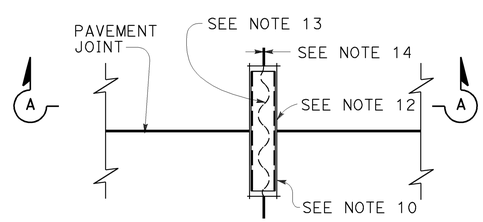

PLAN VIEW

TYPICAL LOOP LEAD-IN DETAIL
AT PAVEMENT JOINT

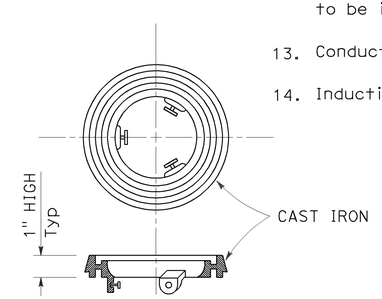

LOCKING GRADE RING

NOTES:

1. Bushing shall be used at end of conduit.
2. Tape detector conductors or cables 3" each side of bushings.
3. Install duct seal compound to each end of termination conduit before installing sealant.
4. Round all sharp edges where detector conductors or cables have to pass.
5. End of conduit shall be 3⅛" below roadway surface.
6. Conduit size / Loop conductors
   - 1"C minimum — 1 to 2 pairs
   - 1½"C minimum — 3 to 4 pairs
   - 2"C minimum — 5 or more pairs
7. Splice detector conductors or cables to detector lead-in-cable.
8. Location of detector handhole when shown on plans.
9. When the shoulder and traveled way are paved with the same material and there is no joint between them, the conduit shall extend only 2'-0" into the shoulder pavement.
10. ¾"C, Type 3 conduit 6" long minimum, plug both ends with duct compound to keep out sealant.
11. ½" Minimum between top of conduit and pavement surface.
12. Sawcut shall not exceed 1" in width and ⅛" longer than conduit to be installed.
13. Conductors with ½" minimum slack inside conduit.
14. Inductive loop detector saw slot.

STATE OF CALIFORNIA
DEPARTMENT OF TRANSPORTATION

ELECTRICAL SYSTEMS (CURB TERMINATION AND HANDHOLE)

NO SCALE

RSP ES-5D DATED JULY 19, 2013 SUPERSEDES STANDARD PLAN ES-5D DATED MAY 20, 2011 - PAGE 451 OF THE STANDARD PLANS BOOK DATED 2010.

REVISED STANDARD PLAN RSP ES-5D

2010 REVISED STANDARD PLAN RSP ES-5D

7-9-13

Dist	COUNTY	ROUTE	POST MILES TOTAL PROJECT	SHEET No.	TOTAL SHEETS
08	SBd	38	15.0/49.5	49	50

REGISTERED CIVIL ENGINEER

April 19, 2013
PLANS APPROVAL DATE

REGISTERED PROFESSIONAL ENGINEER Gurinderpal Bhullar No. C48815 Exp. 9-30-14 CIVIL STATE OF CALIFORNIA

THE STATE OF CALIFORNIA OR ITS OFFICERS OR AGENTS SHALL NOT BE RESPONSIBLE FOR THE ACCURACY OR COMPLETENESS OF SCANNED COPIES OF THIS PLAN SHEET.

TO ACCOMPANY PLANS DATED 12-16-13

2010 REVISED STANDARD PLAN RSP T13

NOTES:

See Revised Standard Plan RSP T9 for tables.

Use cone spacing X for taper segment, Y for tangent segment or Z for conflict situations, as approriate, per Table 1, unless X, Y, or Z cone spacing is shown on this sheet.

Unless otherwise specified in the special provisions, all temporary warning signs shall have black legend on fluorescent orange background.

California codes are designated by (CA). Otherwise, Federal (MUTCD) codes are shown.

TYPICAL LANE CLOSURE WITH REVERSIBLE CONTROL

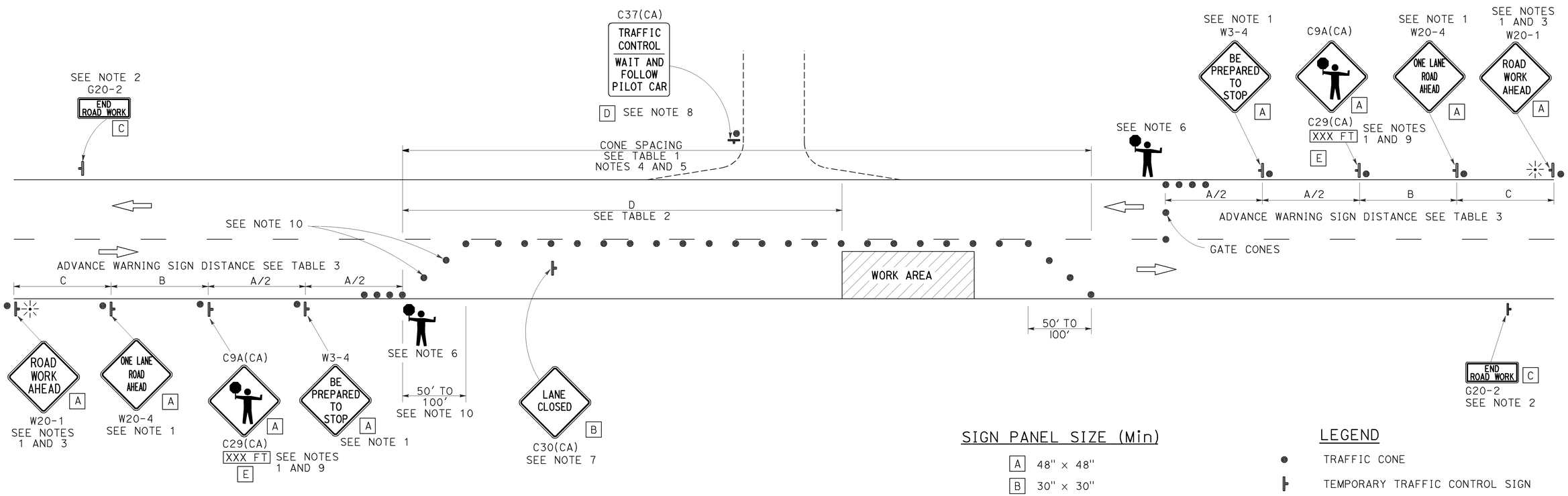

SIGN PANEL SIZE (Min)

A	48" × 48"
B	30" × 30"
C	36" × 18"
D	36" × 42"
E	20" × 7"

LEGEND

- TRAFFIC CONE
- TEMPORARY TRAFFIC CONTROL SIGN
- PORTABLE FLASHING BEACON
- FLAGGER

NOTES:

1. Each advance warning sign in each direction of travel shall be equipped with at least two flags for daytime closure. Each flag shall be at least 16" x 16" in size and shall be orange or fluorescent red-orange in color. Flashing beacons shall be placed at the locations indicated for lane closure during hours of darkness.
2. A G20-2 "END ROAD WORK" sign, as appropriate, shall be placed at the end of the lane control unless the end of work area is obvious, or ends within a larger project's limits.
3. If the W20-1 sign would follow within 2000' of a stationary W20-1 or G20-1 "ROAD WORK NEXT _____ MILES", use a W20-4 sign for the first advance warning sign.
4. All cones used for lane closures during the hours of darkness shall be fitted with retroreflective bands (or sleeves) as specified in the specifications.
5. Portable delineators, placed at one-half the spacing indicated for traffic cones, may be used instead of cones for daytime closures only.
6. Additional advance flaggers may be required. Flagger should stand in a conspicuous place, be visible to approaching traffic as well as approaching vehicles after the first vehicle has stopped. During the hours of darkness, the flagging-station and flagger shall be illuminated and clearly visible to approaching traffic. The illumination footprint of the lighting on the ground shall be at least 20' in diameter. Place a minimum of four cones at 50' intervals in advance of flagger station as shown.
7. Place C30(CA) "LANE CLOSED" sign at 500' to 1000' intervals throughout extended work areas. They are optional if the work area is visible from the flagger station.
8. When a pilot car is used, place a C37(CA) "TRAFFIC CONTROL-WAIT AND FOLLOW PILOT CAR" sign with black legend on white background at all intersections, driveways and alleys without a flagger within traffic control area. Signs shall be clean and visible at all times. Where traffic can not be effectively self-regulated, at least one flagger shall be used at each intersection within traffic control area.
9. An optional C29(CA) sign may be placed below the C9A(CA) sign.
10. Either traffic cones or barricades shall be placed on the taper. Barricades shall be Type I, II, or III.

STATE OF CALIFORNIA
DEPARTMENT OF TRANSPORTATION

TRAFFIC CONTROL SYSTEM FOR LANE CLOSURE ON TWO LANE CONVENTIONAL HIGHWAYS

NO SCALE

RSP T13 DATED APRIL 19, 2013 SUPERSEDES STANDARD PLAN T13 DATED MAY 20, 2011 - PAGE 241 OF THE STANDARD PLANS BOOK DATED 2010.

REVISED STANDARD PLAN RSP T13

Dist	COUNTY	ROUTE	POST MILES TOTAL PROJECT	SHEET No.	TOTAL SHEETS
08	SBd	38	15.0/49.5	50	50

REGISTERED CIVIL ENGINEER

April 19, 2013
PLANS APPROVAL DATE

REGISTERED PROFESSIONAL ENGINEER Gurinderpal Bhullar No. C48815 Exp. 9-30-14 CIVIL STATE OF CALIFORNIA

THE STATE OF CALIFORNIA OR ITS OFFICERS OR AGENTS SHALL NOT BE RESPONSIBLE FOR THE ACCURACY OR COMPLETENESS OF SCANNED COPIES OF THIS PLAN SHEET.

TO ACCOMPANY PLANS DATED 12-16-13

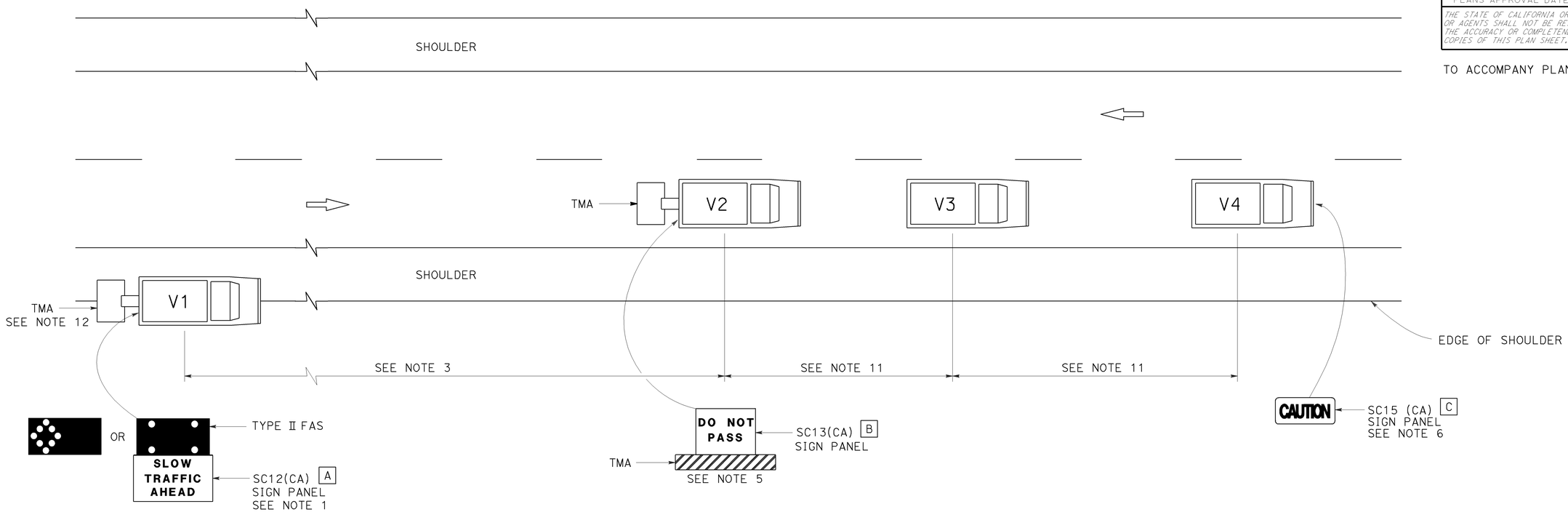

LEGEND

V1	SIGN VEHICLE
V2	SHADOW VEHICLE
V3	WORK/APPLICATION VEHICLE
V4	SIGN VEHICLE
TMA	TRUCK-MOUNTED ATTENUATOR
	FLASHING ARROW SIGN (FAS) IN FLASHING CAUTION MODE
	FLASHING ARROW SIGN (FAS) IN ALTERNATING DIAMOND CAUTION

SIGN PANEL SIZE (Min)

A	72" x 42"
B	54" x 42"
C	54" x 24"

NOTES:

1. Either a changeable message sign or a SC12(CA) "SLOW TRAFFIC AHEAD" sign shall be mounted on the rear of sign vehicle V1. The changeable message sign shall be sequenced to show the "CAUTION" message first, follow by the "SLOW TRAFFIC AHEAD" message. A Type II flashing arrow sign may be used with the SC12(CA) sign panel.
2. Sign vehicle V1 should be positioned where highly visible when shoulders are not available.
3. If traffic queues develop, sign vehicle V1 should be positioned upstream from the end of queue.
4. Vehicle-mounted sign panels shall have Type III or above retroreflective sheeting, black on white, or black on fluorescent orange, with 6" minimum series D letters per Caltrans sign specifications.
5. Shadow vehicle shall be equipped with a truck-mounted attenuator. The sign panel shown shall be mounted on the rear of shadow vehicle V2. The message "LANE CLOSED" may be used in place of the "DO NOT PASS" message.
6. The sign panel shown shall be mounted on the front of sign vehicle V4, facing opposing traffic.
7. All vehicles shall be equipped with flashing or rotating amber lights.
8. Sign vehicle V4 will not be required when the work and vehicles V2 and V3 are 2′ or more from the centerline of the highway during the work or application operations.
9. All vehicles used for lane closures shall be equipped with two-way radios and the vehicle operators shall maintain communication during the work or application operation.
10. This plan shall not be used where workers would be on foot in the work area. Use a stationary type lane closure (Revised Standard Plan T13) for this condition.
11. Minimize spacing between vehicles V2 and V3 and vehicles V3 and V4 to deter road users from driving in between them.
12. If sign vehicle V1 encroaches into the traffic lane due to insufficient shoulder width, sign vehicle V1 shall be equipped with a truck-mounted attenuator. Sign vehicle V1 shall stay as close to the edge of shoulder as practicable.

STATE OF CALIFORNIA
DEPARTMENT OF TRANSPORTATION

TRAFFIC CONTROL SYSTEM FOR MOVING LANE CLOSURE ON TWO LANE HIGHWAYS

NO SCALE

RSP T17 DATED APRIL 19, 2013 SUPERSEDES STANDARD PLAN T17
DATED MAY 20, 2011 - PAGE 245 OF THE STANDARD PLANS BOOK DATED 2010.

REVISED STANDARD PLAN RSP T17

2010 REVISED STANDARD PLAN RSP T17

12-18-12