IM-015-2(036)215E

Dist	COUNTY	ROUTE	POST MILES TOTAL PROJECT	SHEET No.	TOTAL SHEETS
08	SBd	15	R111.6,R120.4, R124.2	1	54

STATE OF CALIFORNIA
DEPARTMENT OF TRANSPORTATION

PROJECT PLANS FOR CONSTRUCTION ON
STATE HIGHWAY

IN SAN BERNARDINO COUNTY
18 MILES SOUTH OF BAKER
AT AFTON ROAD OVERCROSSING,
AT BASIN ROAD OVERCROSSING,
AND AT RASOR ROAD OVERCROSSING

TO BE SUPPLEMENTED BY STANDARD PLANS DATED MAY 2006

INDEX OF PLANS

SHEET No.	DESCRIPTION
1	TITLE AND LOCATION MAP
2-4	LAYOUTS
5-6	CONSTRUCTION DETAILS
7	TEMPORARY WATER POLLUTION CONTROL QUANTITIES
8	CONSTRUCTION AREA SIGNS
9-10	TRAFFIC HANDLING PLANS AND QUANTITIES
11	SUMMARY OF QUANTITIES
12-18	REVISED AND NEW STANDARD PLANS

STRUCTURE PLANS

19-30	AFTON ROAD OC (SEISMIC RETROFIT), Br No. 54-0364
31-42	BASIN ROAD OC (SEISMIC RETROFIT), Br No. 54-0383
43-54	RASOR ROAD OC (SEISMIC RETROFIT), Br No. 54-0391

THE STANDARD PLANS LIST APPLICABLE TO THIS CONTRACT IS INCLUDED IN THE NOTICE TO BIDDERS AND SPECIAL PROVISIONS BOOK.

LOCATION MAP

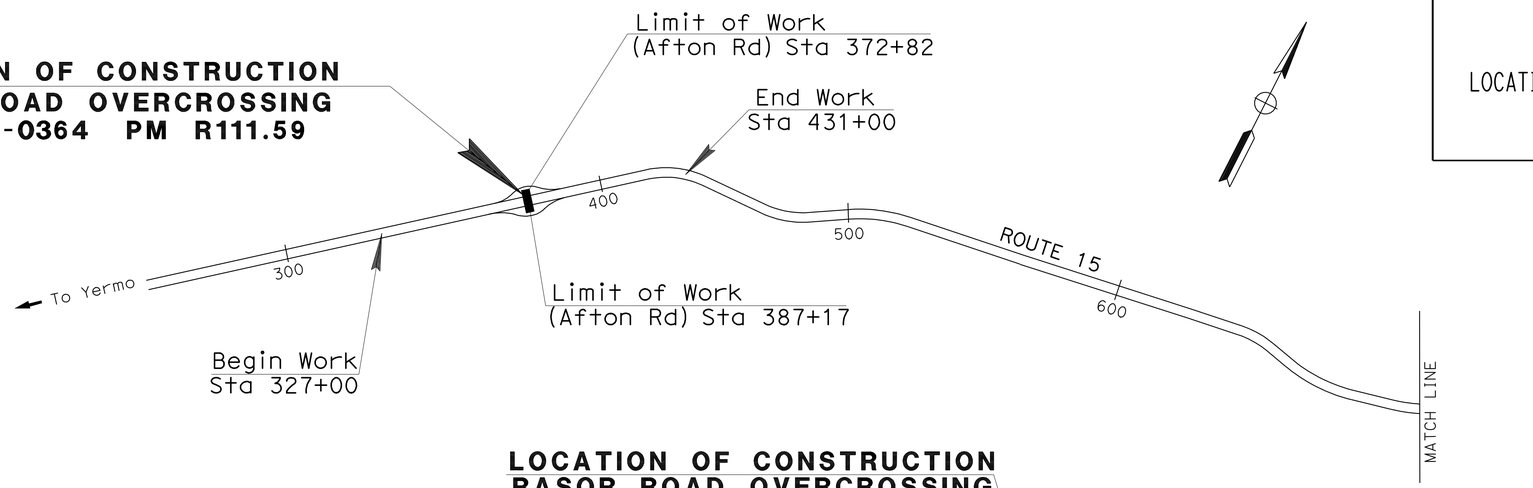

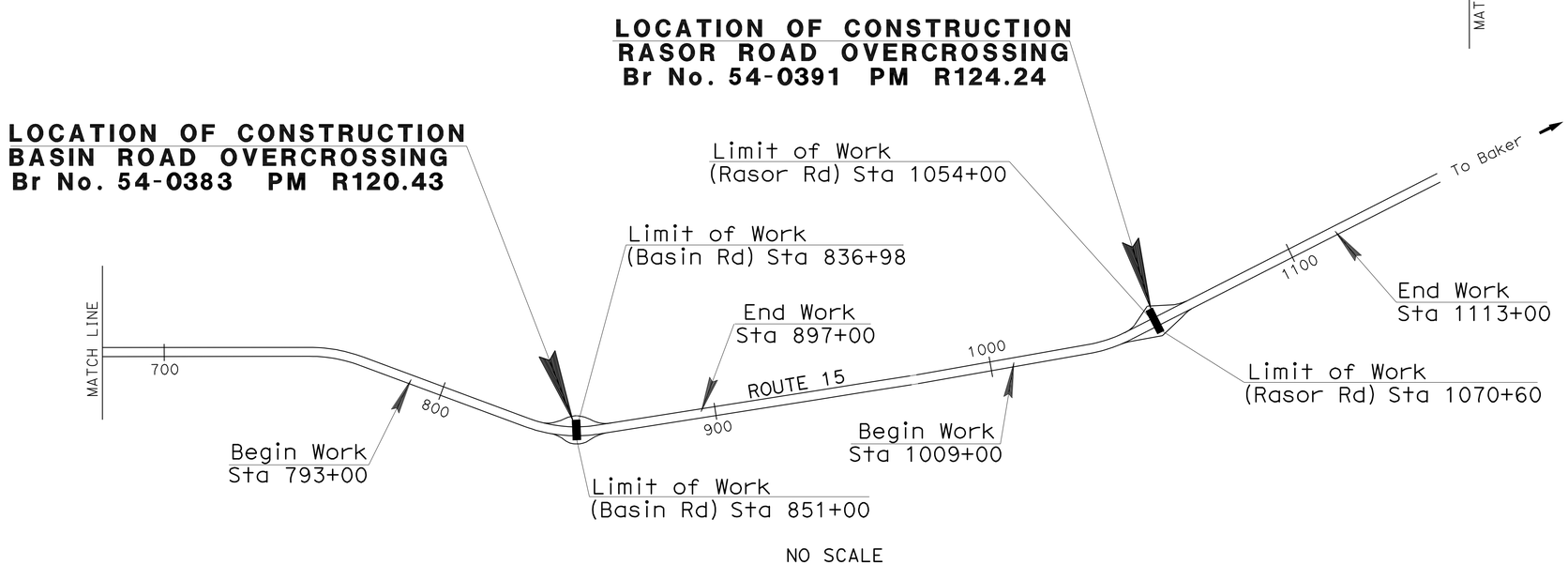

NO SCALE

THE CONTRACTOR SHALL POSSESS THE CLASS (OR CLASSES) OF LICENSE AS SPECIFIED IN THE "NOTICE TO BIDDERS."

PROJECT MANAGER: JUAN LIZARDE
DESIGN ENGINEER: ANH V. PHAN

PROJECT ENGINEER REGISTERED CIVIL ENGINEER — DATE 1-03-11

March 7, 2011
PLANS APPROVAL DATE

REGISTERED PROFESSIONAL ENGINEER — ANH PHAN — No. C62294 — Exp. 9-30-11 — CIVIL — STATE OF CALIFORNIA

THE STATE OF CALIFORNIA OR ITS OFFICERS OR AGENTS SHALL NOT BE RESPONSIBLE FOR THE ACCURACY OR COMPLETENESS OF SCANNED COPIES OF THIS PLAN SHEET.

CONTRACT No.	08-0G4804
PROJECT ID	0800000209

LAST REVISION 01-03-11 — DATE PLOTTED => 29-JUN-2011 — TIME PLOTTED => 05:35

Dist	COUNTY	ROUTE	POST MILES TOTAL PROJECT	SHEET No.	TOTAL SHEETS
08	SBd	15	R111.6,R120.4, R124.2	2	54

REGISTERED CIVIL ENGINEER 1-03-11 DATE

3-7-11
PLANS APPROVAL DATE

REGISTERED PROFESSIONAL ENGINEER ANH PHAN No. C62294 Exp. 9-30-11 CIVIL STATE OF CALIFORNIA

THE STATE OF CALIFORNIA OR ITS OFFICERS OR AGENTS SHALL NOT BE RESPONSIBLE FOR THE ACCURACY OR COMPLETENESS OF SCANNED COPIES OF THIS PLAN SHEET.

NOTES:

1. FOR COMPLETE RIGHT OF WAY AND ACCURATE ACCESS DATA, SEE RIGHT OF WAY RECORD MAPS AT DISTRICT OFFICE.
2. SEE STRUCTURAL PLANS FOR BRIDGE WORK.

LEGEND:

STRUCTURAL WORK

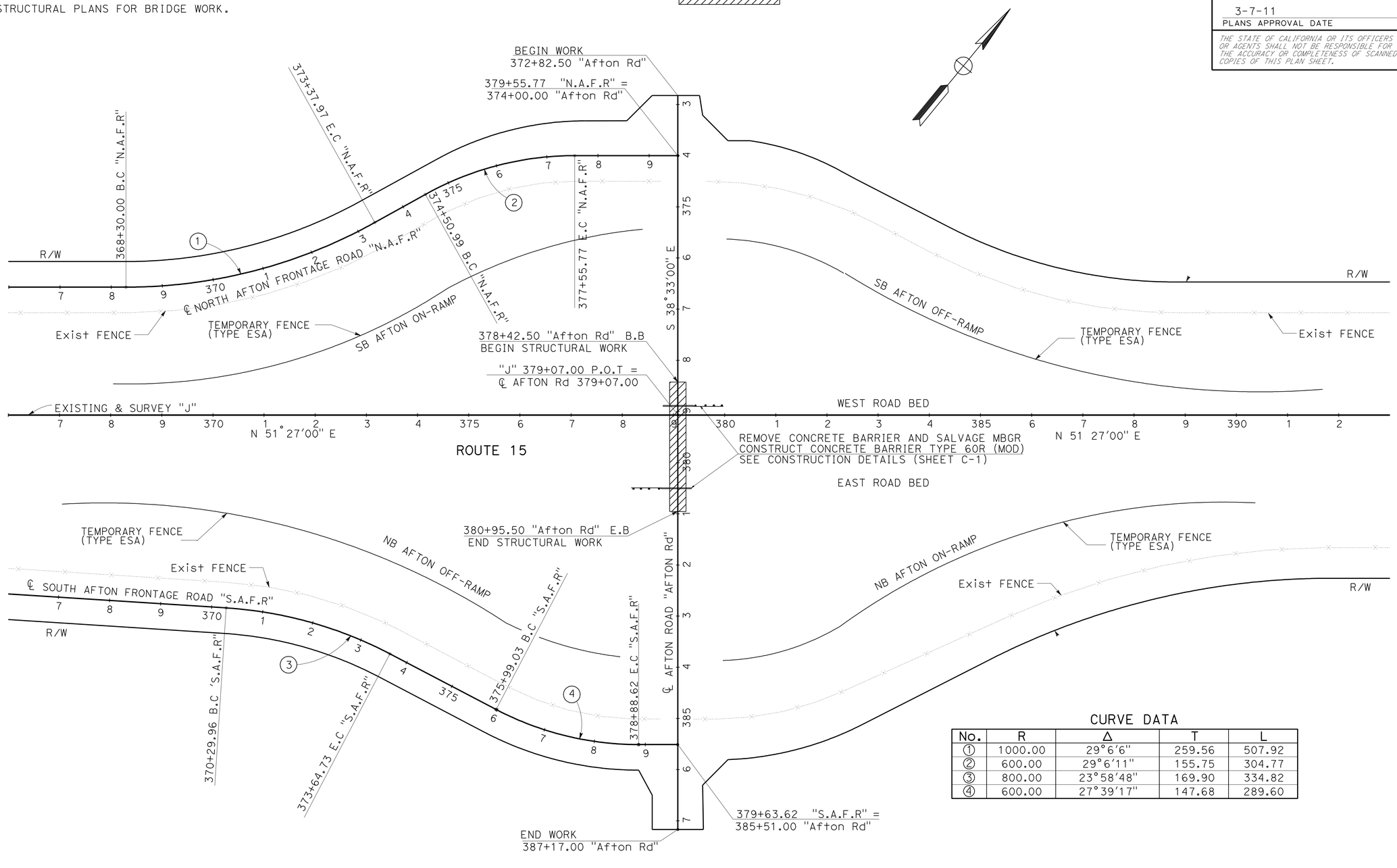

CURVE DATA

No.	R	Δ	T	L
①	1000.00	29°6'6"	259.56	507.92
②	600.00	29°6'11"	155.75	304.77
③	800.00	23°58'48"	169.90	334.82
④	600.00	27°39'17"	147.68	289.60

AFTON ROAD OVERCROSSING BRIDGE
BRIDGE No. 54-0364 PM R111.59
ROUTE 15

LAYOUT
SCALE: 1" = 100'
L-1

STATE OF CALIFORNIA - DEPARTMENT OF TRANSPORTATION
Caltrans®
DESIGN
FUNCTIONAL SUPERVISOR: RENEE SASSE
CALCULATED-DESIGNED BY: RAMON LAZARO
CHECKED BY: ANH PHAN
REVISED BY
DATE REVISED

LAST REVISION 01-03-11
DATE PLOTTED => 08-MAR-2011
TIME PLOTTED => 09:04

Dist	COUNTY	ROUTE	POST MILES TOTAL PROJECT	SHEET No.	TOTAL SHEETS
08	SBd	15	R111.6,R120.4, R124.2	3	54

REGISTERED CIVIL ENGINEER 1-03-11 DATE

3-7-11
PLANS APPROVAL DATE

REGISTERED PROFESSIONAL ENGINEER ANH PHAN No. C62294 Exp. 9-30-11 CIVIL STATE OF CALIFORNIA

THE STATE OF CALIFORNIA OR ITS OFFICERS OR AGENTS SHALL NOT BE RESPONSIBLE FOR THE ACCURACY OR COMPLETENESS OF SCANNED COPIES OF THIS PLAN SHEET.

LEGEND:

STRUCTURAL WORK

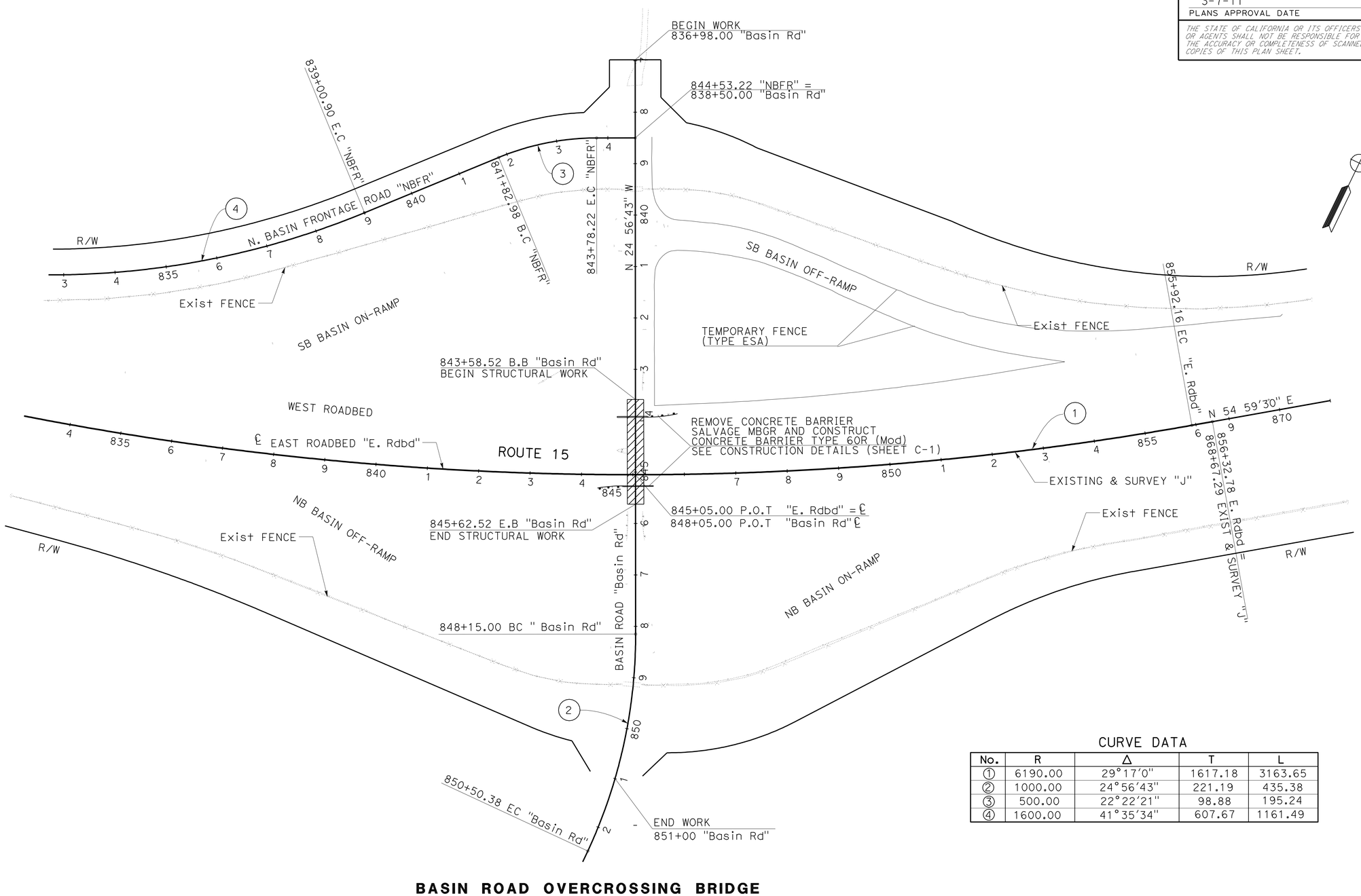

CURVE DATA

No.	R	Δ	T	L
1	6190.00	29°17'0"	1617.18	3163.65
2	1000.00	24°56'43"	221.19	435.38
3	500.00	22°22'21"	98.88	195.24
4	1600.00	41°35'34"	607.67	1161.49

BASIN ROAD OVERCROSSING BRIDGE
BRIDGE No. 54-0383 PM R120.43

ROUTE 15

LAYOUT

SCALE: 1" = 100'

L-2

STATE OF CALIFORNIA - DEPARTMENT OF TRANSPORTATION
Caltrans
DESIGN

FUNCTIONAL SUPERVISOR: RENEE SASSE
CALCULATED-DESIGNED BY: RAMON LAZARO
CHECKED BY: ANH PHAN
REVISED BY
DATE REVISED

LAST REVISION 01-03-11
DATE PLOTTED => 08-MAR-2011
TIME PLOTTED => 09:04

Dist	COUNTY	ROUTE	POST MILES TOTAL PROJECT	SHEET No.	TOTAL SHEETS
08	SBd	15	R111.6,R120.4, R124.2	4	54

REGISTERED CIVIL ENGINEER 1-03-11 DATE

3-7-11
PLANS APPROVAL DATE

REGISTERED PROFESSIONAL ENGINEER ANH PHAN No. C62294 Exp. 9-30-11 CIVIL STATE OF CALIFORNIA

THE STATE OF CALIFORNIA OR ITS OFFICERS OR AGENTS SHALL NOT BE RESPONSIBLE FOR THE ACCURACY OR COMPLETENESS OF SCANNED COPIES OF THIS PLAN SHEET.

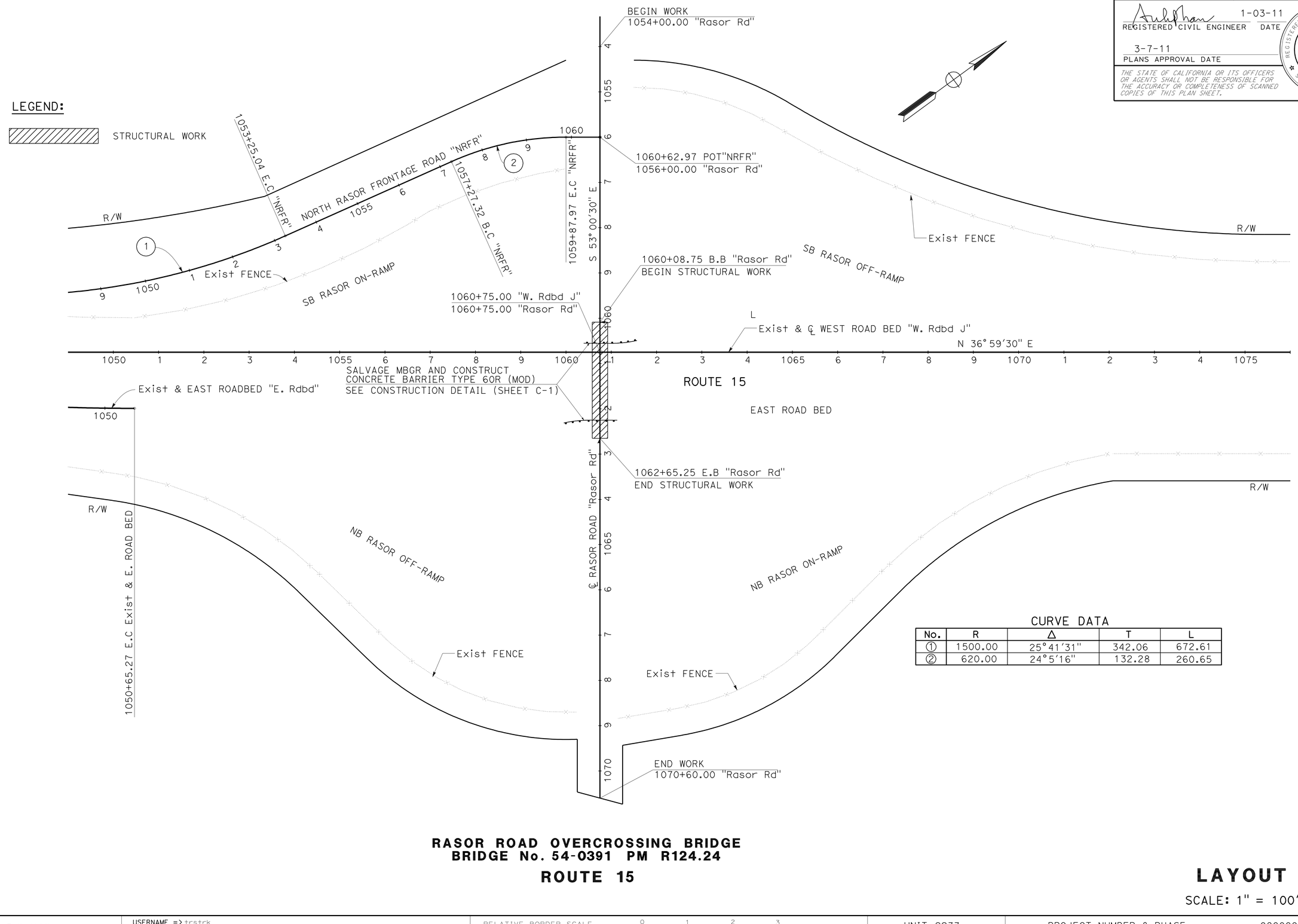

CURVE DATA

No.	R	Δ	T	L
1	1500.00	25°41'31"	342.06	672.61
2	620.00	24°5'16"	132.28	260.65

RASOR ROAD OVERCROSSING BRIDGE
BRIDGE No. 54-0391 PM R124.24
ROUTE 15

LAYOUT
SCALE: 1" = 100'

L-3

STATE OF CALIFORNIA - DEPARTMENT OF TRANSPORTATION
Caltrans
DESIGN
FUNCTIONAL SUPERVISOR: RENEE SASSE
CALCULATED-DESIGNED BY: RAMON LAZARO
CHECKED BY: ANH PHAN
REVISED BY
DATE REVISED

LAST REVISION 01-03-11
DATE PLOTTED => 08-MAR-2011
TIME PLOTTED => 09:04

Dist	COUNTY	ROUTE	POST MILES TOTAL PROJECT	SHEET No.	TOTAL SHEETS
08	SBd	15	R111.6,R120.4, R124.2	5	54

REGISTERED CIVIL ENGINEER 1-03-11 DATE

3-7-11
PLANS APPROVAL DATE

REGISTERED PROFESSIONAL ENGINEER ANH PHAN No. C62294 Exp. 9-30-11 CIVIL STATE OF CALIFORNIA

THE STATE OF CALIFORNIA OR ITS OFFICERS OR AGENTS SHALL NOT BE RESPONSIBLE FOR THE ACCURACY OR COMPLETENESS OF SCANNED COPIES OF THIS PLAN SHEET.

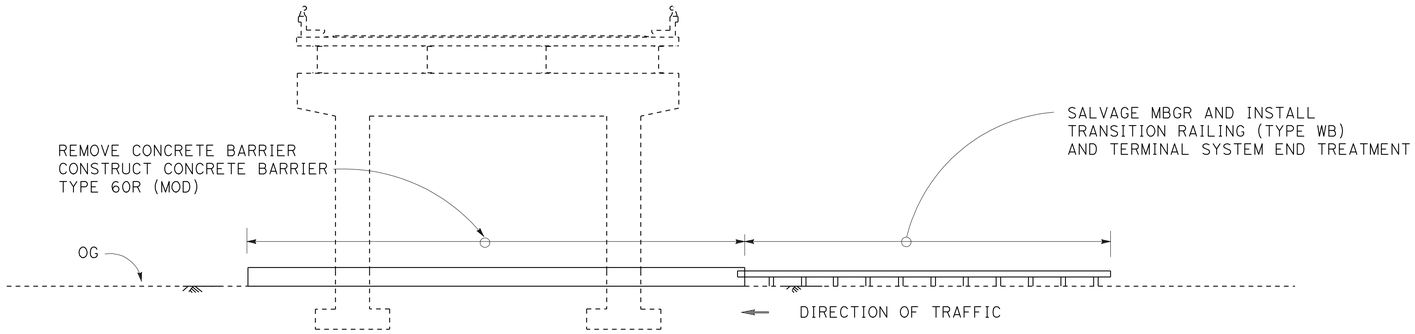

ELEVATION

AFTON ROAD OC AND BASIN ROAD OC
(NORTHBOUND AND SOUTHBOUND)

NOTES:

1. FOR CONCRETE BARRIER TYPE 60R (MOD) DETAILS SEE CONSTRUCTION DETAILS SHEET C-2.
2. FOR TRANSITION RAILING (TYPE WB) CONNECTED TO CONCRETE BARRIER DETAILS, SEE 2006 Std PLANS A77F1 AND A77J4.
3. FOR FLARED OR IN-LINE TERMINAL SYSTEM END TREATMENT DETAILS, SEE 2006 Std PLANS A77L1, A77L2, A77L3, AND A77L5.
4. SEE SHEET Q-1 FOR QUANTITIES.

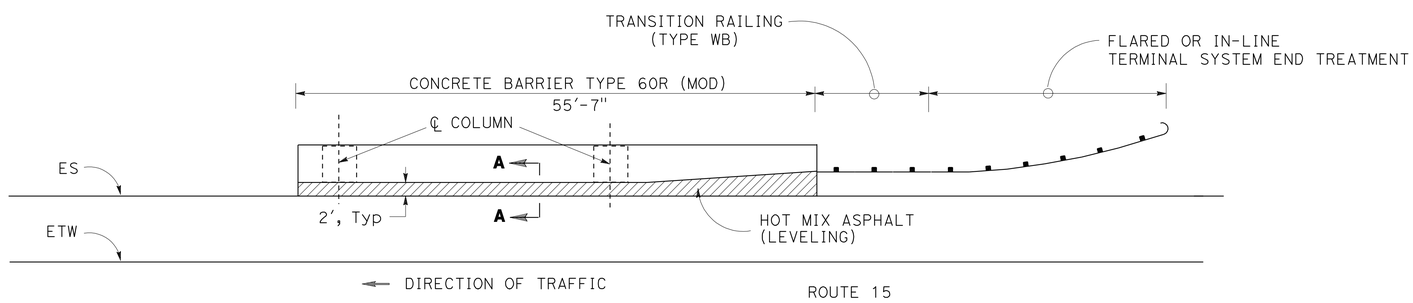

TYPICAL LAYOUT PLAN

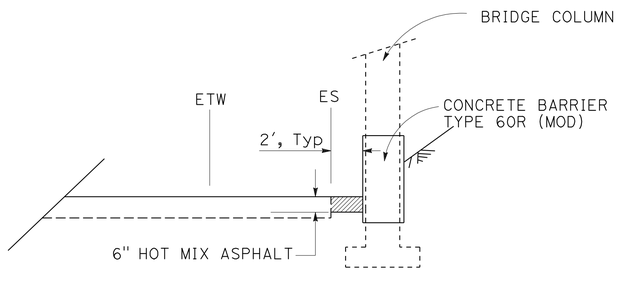

SECTION A-A

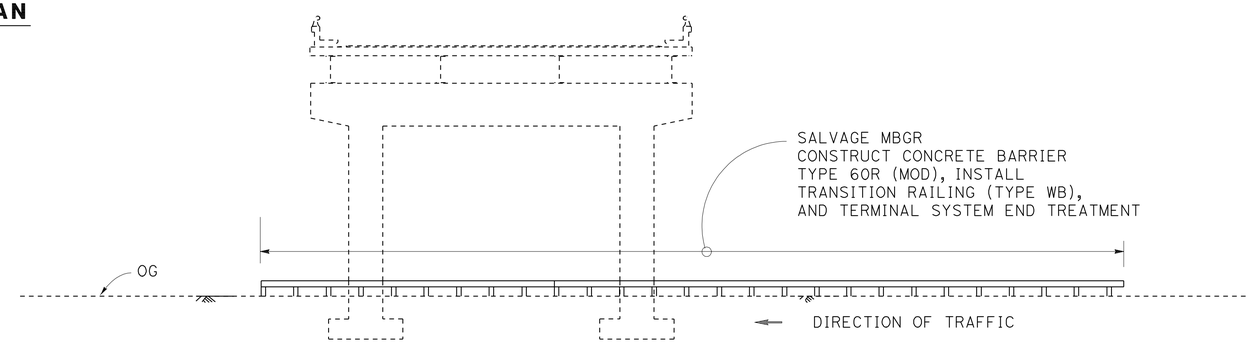

ELEVATION

RASOR ROAD OC
(NORTHBOUND AND SOUTHBOUND)

CONCRETE BARRIER AND METAL BEAM GUARD RAILING

ROUTE 15

CONSTRUCTION DETAILS

NO SCALE

C-1

STATE OF CALIFORNIA - DEPARTMENT OF TRANSPORTATION
Caltrans®
DESIGN

FUNCTIONAL SUPERVISOR: RENEE SASSE
CALCULATED-DESIGNED BY: RAMON LAZARO
CHECKED BY: ANH PHAN
REVISED BY
DATE REVISED

LAST REVISION 01-03-11
DATE PLOTTED => 08-MAR-2011
TIME PLOTTED => 09:04

Dist	COUNTY	ROUTE	POST MILES TOTAL PROJECT	SHEET No.	TOTAL SHEETS
08	SBd	15	R111.6,R120.4, R124.2	6	54

REGISTERED CIVIL ENGINEER 1-03-11 DATE

3-7-11
PLANS APPROVAL DATE

REGISTERED PROFESSIONAL ENGINEER ANH PHAN No. C62294 Exp. 9-30-11 CIVIL STATE OF CALIFORNIA

THE STATE OF CALIFORNIA OR ITS OFFICERS OR AGENTS SHALL NOT BE RESPONSIBLE FOR THE ACCURACY OR COMPLETENESS OF SCANNED COPIES OF THIS PLAN SHEET.

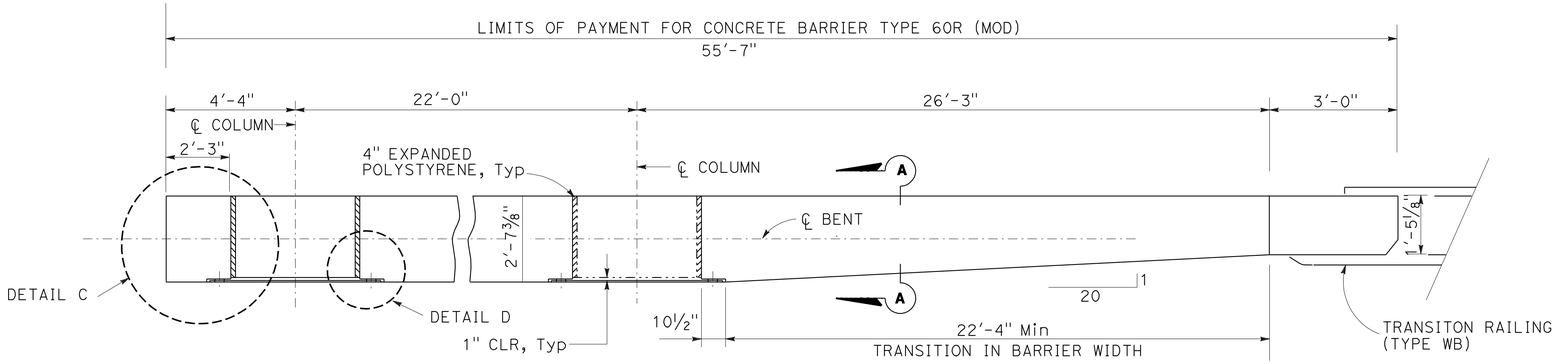

PLAN

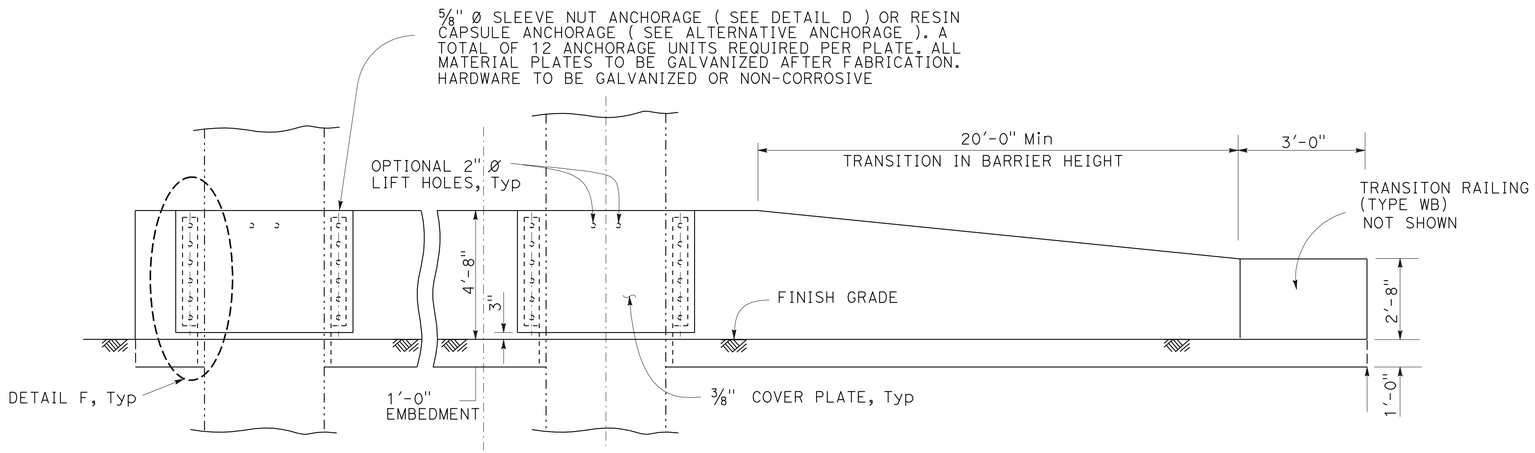

ELEVATION

NOTES:

1. RESIN CAPSULE ANCHORAGE IS SUBJECT TO APPROVAL OF THE ENGINEER. INSTALLATION PROCEDURES SHALL COMPLY WITH MANUFACTURER'S INSTRUCTIONS.
2. DETAIL B SIMILAR TO DETAIL A EXCEPT FOR ANCHORAGE DEVICES.
3. THE CONTRACTOR SHALL VERIFY ALL CONTROLLED FIELD DIMENSIONS BEFORE ORDERING OR FABRICATING ANY MATERIALS.

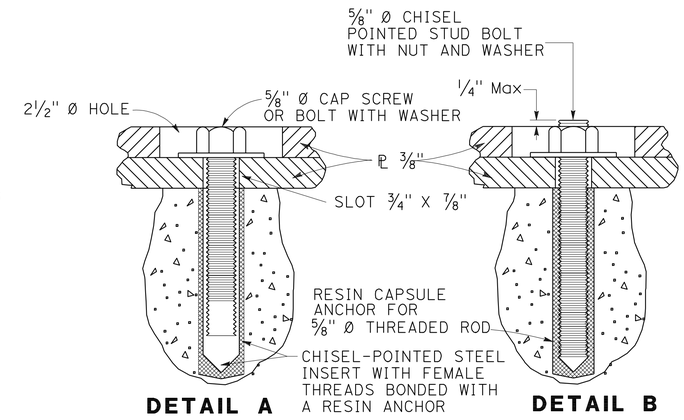

ALTERNATIVE ANCHORAGE

SEE NOTES 1 AND 2

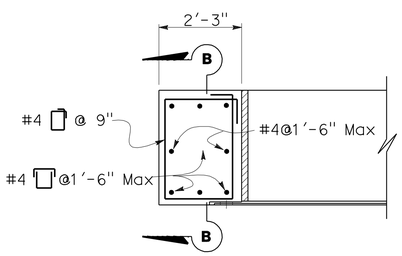

DETAIL C

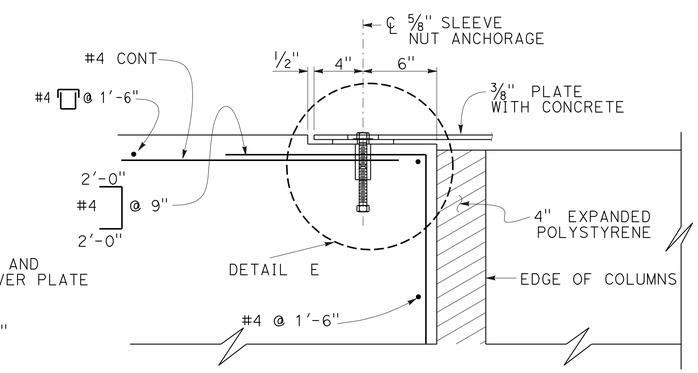

DETAIL D

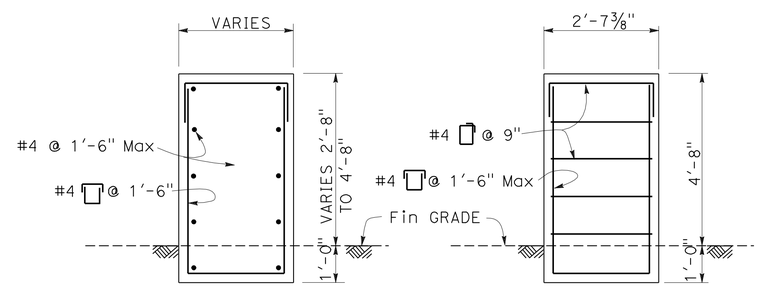

SECTION A-A

SECTION B-B

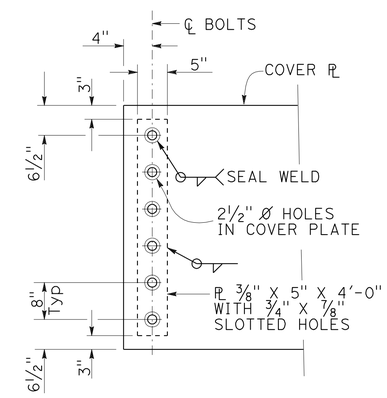

DETAIL F

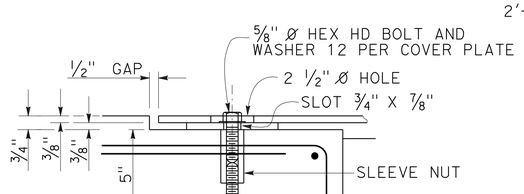

DETAIL E

CONCRETE BARRIER TYPE 60R (MOD)
VERTICAL FACE FOR SIDE OF ROAD (AT BRIDGE COLUMN)

ROUTE 15

CONSTRUCTION DETAILS

NO SCALE

C-2

STATE OF CALIFORNIA - DEPARTMENT OF TRANSPORTATION
Caltrans DESIGN

FUNCTIONAL SUPERVISOR: RENEE SASSE
CALCULATED-DESIGNED BY: RAMON LAZARO
CHECKED BY: ANH PHAN
REVISED BY
DATE REVISED

LAST REVISION 01-03-11
DATE PLOTTED => 08-MAR-2011
TIME PLOTTED => 09:04

Dist	COUNTY	ROUTE	POST MILES TOTAL PROJECT	SHEET No.	TOTAL SHEETS
08	SBd	15	R111.6,R120.4, R124.2	7	54

REGISTERED CIVIL ENGINEER 1-03-11 DATE

3-7-11
PLANS APPROVAL DATE

REGISTERED PROFESSIONAL ENGINEER RAJNIKANT PATEL No. C46082 Exp. 12-31-12 CIVIL STATE OF CALIFORNIA

THE STATE OF CALIFORNIA OR ITS OFFICERS OR AGENTS SHALL NOT BE RESPONSIBLE FOR THE ACCURACY OR COMPLETENESS OF SCANNED COPIES OF THIS PLAN SHEET.

NOTES:

1. THE QUANTITIES OF BMPs SHOWN ON THESE QUANTITIY SHEET (WPCQ-1) IS INTENDED TO BE USED AS GUIDE LINES ONLY TO INSTALL WATER POLLUTION CONTROL BMPs. FIELD CONDITION MAY NECESSITATE MODIFICATION OR RELOCATION OF BMPs. AND ITS QUANTITIES AS PER INSTRUCTION OF ENGINEER.

2. FOR INSTALLATION OF CONSTRUCTION SITE BMPs, SEE STANDARD PLAN DETAILS.

TEMPORARY CONSTRUCTION BMPs

TEMPORARY CONSTRUCTION SITE BMPs	UNITS	QUANTITIES
TEMPORARY COVER	SQYD	600
TEMPORARY FIBER ROLL	LF	420
TEMPORARY ESA FENCE	LF	7700

TEMPORARY WATER POLLUTION CONTROL QUANTITIES

WPCQ-1

REVISED BY | DATE REVISED

RAJNIKANT PATEL

CALCULATED-DESIGNED BY | CHECKED BY

FUNCTIONAL SUPERVISOR

PAUL LAMBERT

STATE OF CALIFORNIA - DEPARTMENT OF TRANSPORTATION

Caltrans®

DESIGN

LAST REVISION 01-03-11 | DATE PLOTTED => 08-MAR-2011 TIME PLOTTED => 09:05

Dist	COUNTY	ROUTE	POST MILES TOTAL PROJECT	SHEET No.	TOTAL SHEETS
08	SBd	15	R111.6,R120.4, R124.2	8	54

Thanh Trinh 1-03-11
REGISTERED CIVIL ENGINEER DATE

3-7-11
PLANS APPROVAL DATE

REGISTERED PROFESSIONAL ENGINEER
T. TRINH
No. C41189
Exp. 3-31-11
CIVIL
STATE OF CALIFORNIA

THE STATE OF CALIFORNIA OR ITS OFFICERS OR AGENTS SHALL NOT BE RESPONSIBLE FOR THE ACCURACY OR COMPLETENESS OF SCANNED COPIES OF THIS PLAN SHEET.

NOTES:

1. SIGNS LOCATIONS SHOWN ARE APPROXIMATE.
   EXACT LOCATIONS WILL BE DETERMINED BY THE ENGINEER.
2. LOCATIONS OF PCMS WILL BE DETERMINED BY THE ENGINEER.
3. SEE PLAN SHEET THQ-1 FOR ADDITIONAL CONSTRUCTION AREA SIGNS.

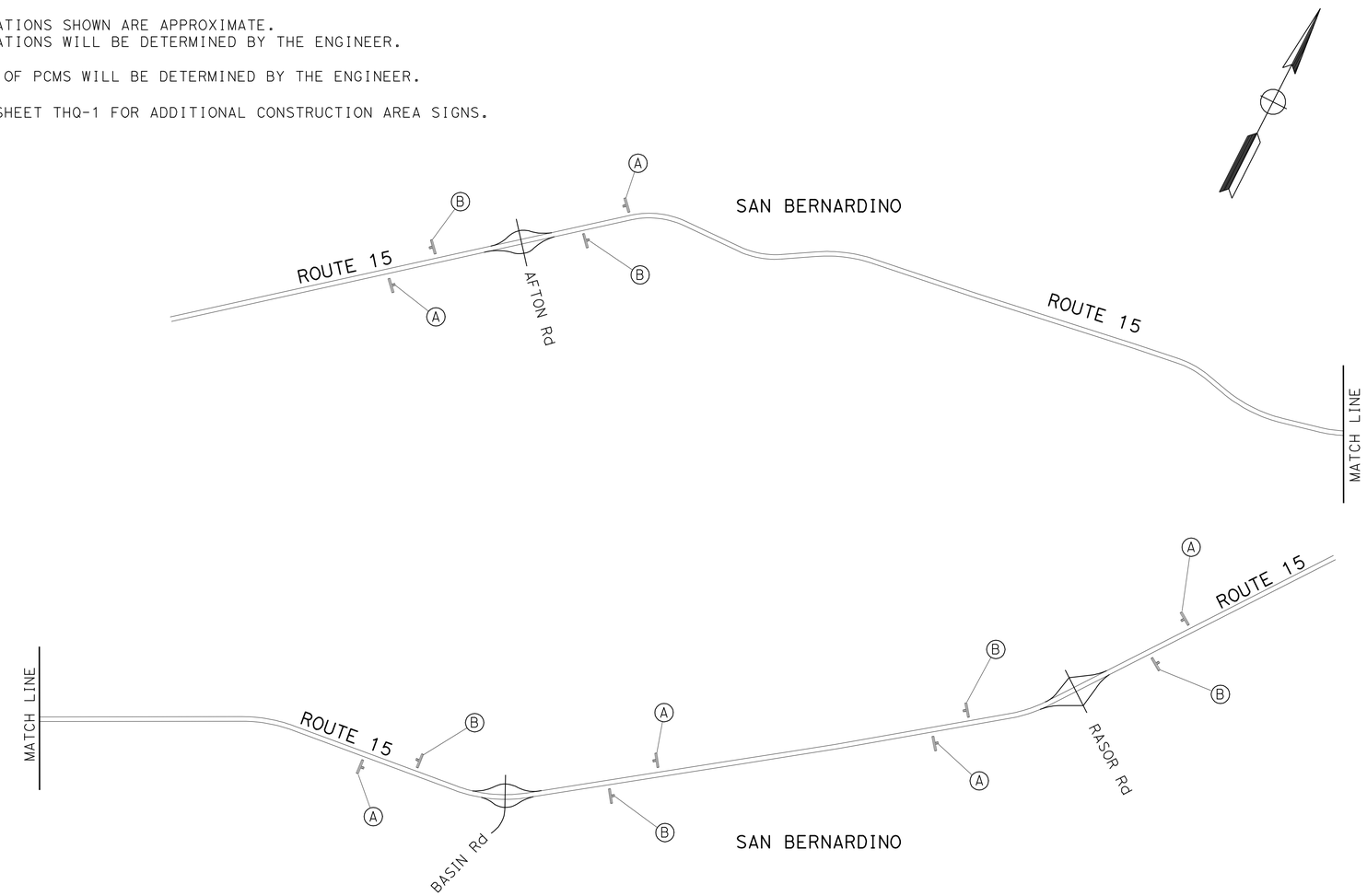

PORTABLE CHANGEABLE MESSAGE SIGN (PCMS)
(EA)
4

STATIONARY MOUNTED CONSTRUCTION AREA SIGNS

SIGN No.	SIGN CODE	PANEL SIZE (In X In)	SIGN MESSAGE	No. OF POST(S) AND SIZE	No. OF SIGNS (N) (EA)
A	W20-1	48 X 48	ROAD WORK AHEAD	1 - 6" X 6"	6
B	G20-2	36 X 18	END ROAD WORK	1 - 4" X 4"	6

(N) - NOT A SEPARATE PAY ITEM; FOR INFORMATION ONLY.

THIS PLAN IS ACCURATE FOR CONSTRUCTION AREA SIGNS WORK ONLY.

CONSTRUCTION AREA SIGNS

NO SCALE

CS-1

STATE OF CALIFORNIA - DEPARTMENT OF TRANSPORTATION
Caltrans TRAFFIC DESIGN A

FUNCTIONAL SUPERVISOR: BILL WASSER
CALCULATED-DESIGNED BY: KEVIN NGUYEN
CHECKED BY: THANH TRINH
REVISED BY
DATE REVISED

LAST REVISION 01-03-11
DATE PLOTTED => 08-MAR-2011
TIME PLOTTED => 09:05

Dist	COUNTY	ROUTE	POST MILES TOTAL PROJECT	SHEET No.	TOTAL SHEETS
08	SBd	15	R111.6,R120.4, R124.2	9	54

Thanh Trinh 1-03-11
REGISTERED CIVIL ENGINEER DATE

3-7-11
PLANS APPROVAL DATE

REGISTERED PROFESSIONAL ENGINEER T. TRINH No. C41189 Exp. 3-31-11 CIVIL STATE OF CALIFORNIA

THE STATE OF CALIFORNIA OR ITS OFFICERS OR AGENTS SHALL NOT BE RESPONSIBLE FOR THE ACCURACY OR COMPLETENESS OF SCANNED COPIES OF THIS PLAN SHEET.

NOTE:

PLAN SHEET TH-1 TO BE USED AT AFTON Rd OC (PM R111.6), BASIN Rd OC (PM R120.4) AND RASOR Rd OC (PM R124.2).

LEGEND:

- ONE POST CONSTRUCTION AREA SIGN
- Temp RAILING (TYPE K)
- DIRECTION OF TRAFFIC
- Temp CRASH CUSHION (TS14)
- PORTABLE FLASHING BEACON
- WORK AREA

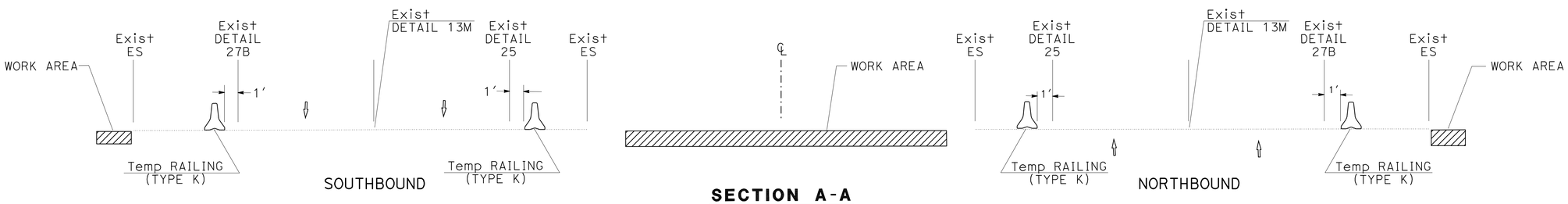

SECTION A-A

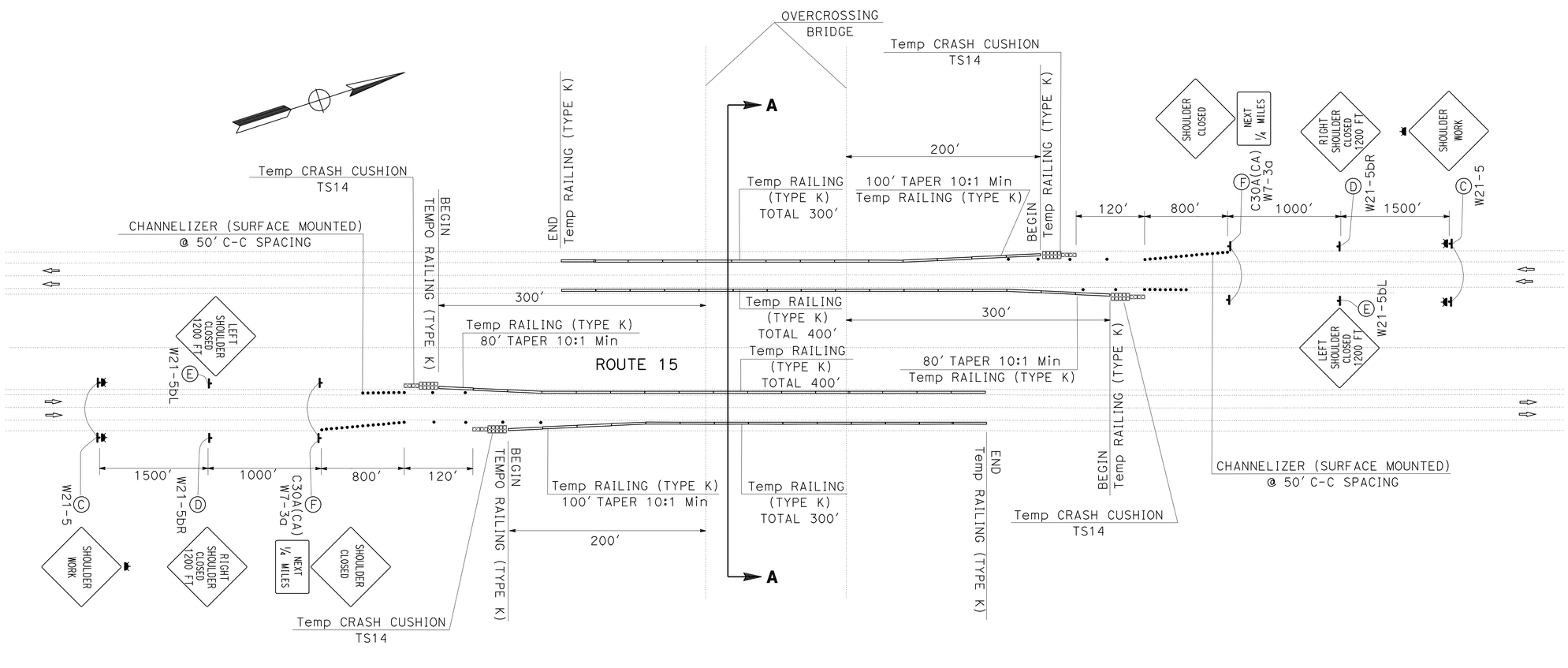

TYPICAL TRAFFIC HANDLING AT EACH RETROFITTING OVERCROSSING BRIDGE

TRAFFIC HANDLING PLAN

NO SCALE

TH-1

THIS PLAN IS ACCURATE FOR TRAFFIC HANDLING ONLY.

STATE OF CALIFORNIA - DEPARTMENT OF TRANSPORTATION
Caltrans TRAFFIC DESIGN A

FUNCTIONAL SUPERVISOR: BILL WASSER
CALCULATED-DESIGNED BY: KEVIN NGUYEN
CHECKED BY: THANH TRINH
REVISED BY / DATE REVISED

LAST REVISION 01-03-11 | DATE PLOTTED => 08-MAR-2011 | TIME PLOTTED => 09:05

Dist	COUNTY	ROUTE	POST MILES TOTAL PROJECT	SHEET No.	TOTAL SHEETS
08	SBd	15	R111.6,R120.4, R124.2	10	54

Thanh Trinh 1-03-11
REGISTERED CIVIL ENGINEER DATE

3-7-11
PLANS APPROVAL DATE

REGISTERED PROFESSIONAL ENGINEER
T. TRINH
No. C41189
Exp. 3-31-11
CIVIL
STATE OF CALIFORNIA

THE STATE OF CALIFORNIA OR ITS OFFICERS OR AGENTS SHALL NOT BE RESPONSIBLE FOR THE ACCURACY OR COMPLETENESS OF SCANNED COPIES OF THIS PLAN SHEET.

STATIONARY MOUNTED CONSTRUCTION AREA SIGNS

SHEET No.	SIGN No.	SIGN CODE FED	SIGN CODE CA	PANEL SIZE	SIGN MESSAGE	No. OF POST(S) AND SIZE	No. OF SIGNS (N) (EA)
TH-1	C	W21-5		48" X 48"	SHOULDER WORK	1 - 6" X 6"	12
	D	W21-5bR		48" X 48"	RIGHT SHOULDER CLOSED 1200 Ft	1 - 6" X 6"	6
	E	W21-5bL		48" X 48"	LEFT SHOULDER CLOSED 1200 Ft	1 - 6" X 6"	6
	F		C30A	48" X 48"	SHOULDER CLOSED	1 - 6" X 6"	12
		W7-3a		24" X 18"	NEXT 1/4 MILES		

(N) NOT A SEPARATE PAY ITEM, FOR INFORMATION ONLY.
ADDITONAL CONSTRUCTION AREA SIGNS QUANTITY IS SHOWN IN PLAN SHEET CS-1.

TRAFFIC HANDLING QUANTITIES

SHEET No.	LOCATION	TEMPORARY RAILING (TYPE K) (LF)	TEMPORARY CRASH CUSHION MODULE (EA)	CHANNELIZER (SURFACE MOUNTED) (EA)	FLASHING BEACON (PORTABLE) (EA)
TH-1	AFTON Rd OC PM R111.6	1400	56	64	4
	BASIN Rd OC PM R120.4	1400	56	64	4
	RASOR Rd OC PM R124.2	1400	56	64	4
TOTAL		4200	168	192	12

TRAFFIC HANDLING QUANTITIES

THQ-1

STATE OF CALIFORNIA - DEPARTMENT OF TRANSPORTATION
Caltrans TRAFFIC DESIGN A
FUNCTIONAL SUPERVISOR: BILL WASSER
CALCULATED-DESIGNED BY: KEVIN NGUYEN
CHECKED BY: THANH TRINH
REVISED BY
DATE REVISED

LAST REVISION 01-03-11
DATE PLOTTED => 08-MAR-2011
TIME PLOTTED => 09:05

Dist	COUNTY	ROUTE	POST MILES TOTAL PROJECT	SHEET No.	TOTAL SHEETS
08	SBd	15	R111.6,R120.4, R124.2	11	54

REGISTERED CIVIL ENGINEER 1-03-11 DATE

3-7-11
PLANS APPROVAL DATE

REGISTERED PROFESSIONAL ENGINEER ANH PHAN No. C62294 Exp. 9-30-11 CIVIL STATE OF CALIFORNIA

THE STATE OF CALIFORNIA OR ITS OFFICERS OR AGENTS SHALL NOT BE RESPONSIBLE FOR THE ACCURACY OR COMPLETENESS OF SCANNED COPIES OF THIS PLAN SHEET.

CONCRETE BARRIER AND METAL BEAM GUARD RAILING

LOCATION				REMOVE CONCRETE BARRIER	CONCRETE BARRIER TYPE 60R (MOD)	SALVAGE MBGR	TRANSITION RAILING (TYPE WB)	ALTERNATIVE TERMINAL SYSTEM		HOT MIX ASPHALT (LEVELING)
No.	POST MILE	BRIDGE NAME	DIRECTION					FLARED	IN-LINE	
				LF			EA			TON
1	R111.6	AFTON ROAD OC Br No. 54-0364	NORTHBOUND	60	56	75	1		1	4
			SOUTHBOUND	60	56	75	1		1	4
2	R120.4	BASIN ROAD OC Br No. 54-0383	NORTHBOUND	60	56	62.5	1	1		4
			SOUTHBOUND	60	56	62.5	1	1		4
3	R124.2	RASOR ROAD OC Br No. 54-0391	NORTHBOUND		56	100	1	1		4
			SOUTHBOUND		56	100	1	1		4
TOTAL				240	336	475	6	4	2	24

SUMMARY OF QUANTITIES

Q-1

STATE OF CALIFORNIA - DEPARTMENT OF TRANSPORTATION
Caltrans DESIGN

FUNCTIONAL SUPERVISOR: RENEE SASSE
CALCULATED-DESIGNED BY: RAMON LAZARO
CHECKED BY: ANH PHAN
REVISED BY
DATE REVISED

LAST REVISION 01-03-11
DATE PLOTTED => 08-MAR-2011
TIME PLOTTED => 09:05

DIST	COUNTY	ROUTE	POST MILES TOTAL PROJECT	SHEET NO.	TOTAL SHEETS
08	SBd	15	R111.6,R120.4, R124.2	12	54

Randell D. Hiatt
REGISTERED CIVIL ENGINEER

June 6, 2008
PLANS APPROVAL DATE

REGISTERED PROFESSIONAL ENGINEER
Randell D. Hiatt
No. C50200
Exp. 6-30-09
CIVIL
STATE OF CALIFORNIA

The State of California or its officers or agents shall not be responsible for the accuracy or completeness of electronic copies of this plan sheet.

To accompany plans dated 3-7-11

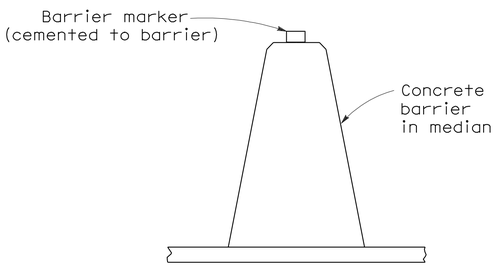

CONCRETE BARRIER TYPE 60 DELINEATION

See Notes 7 and 8

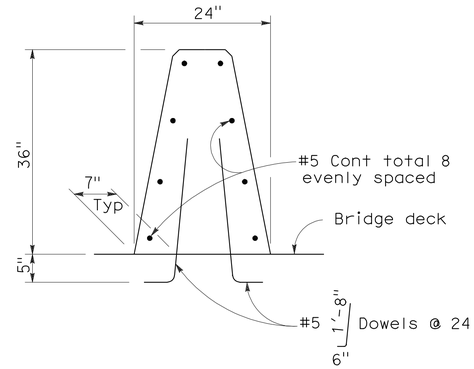

CONCRETE BARRIER TYPE 60A

Details similar to Type 60 except as noted.

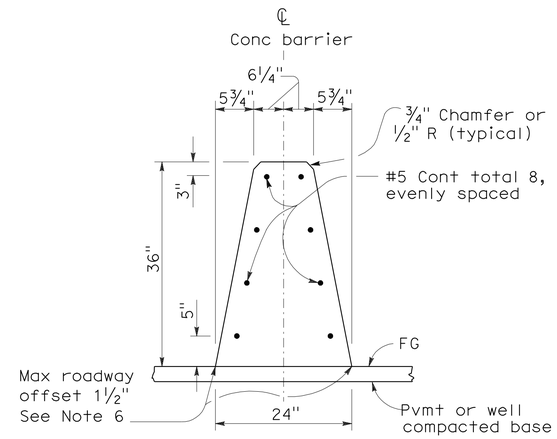

CONCRETE BARRIER TYPE 60

NOTES:

1. See Standard Plan A76B for details of Concrete Barrier Type 60 end anchors, connection to structures and transitions to Concrete Barrier Type 50 and Concrete Barrier Type 60S.
2. See Standard Plan A76C for Concrete Barrier Type 60 transitions at bridge column and sign pedestals.
3. Where glare screen is required on Concrete Barrier Type 60, use Concrete Barrier Type 60G.
4. Where the concrete barrier is added to the face of existing concrete structure, match existing weep holes.
5. Expansion joints in concrete barrier shall be located at all deck, pavement and principal wall joints. Expansion joint filler material shall be the same size as joint or ½" minimum.
6. Where roadway offset is greater than 1½", see Concrete Barrier Type 60C.
7. Barrier delineation to be used when required by the Special Provisions.
8. Spacing of barrier markers to match spacing of raised pavement markers on the adjacent median edgeline pavement delineation.
9. Reinforcing stirrup not required for roadway offsets less than 1'-0".
10. For roadway surfaces offset greater than 1½" to 3", no rebars required. For roadway surfaces offset greater than 3" to 8" use two #4 rebars at 3" above the lower roadway surface. For roadway surfaces offset greater than 8" to 12", use two #4 rebars at 3" above the lower roadway surface and two #4 rebars at 8" above the lower roadway surface. For roadway surfaces offset greater than 12" to 36", use two #4 rebars at 3" above the lower roadway surface and two #4 rebars at every 8" increment vertical spacing above the first two #4 rebars.

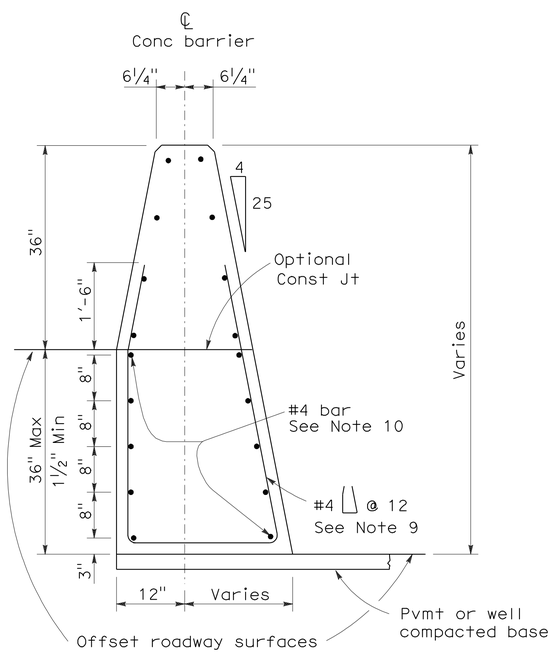

CONCRETE BARRIER TYPE 60C

Details similar to Type 60 except as noted.
Concrete barrier end anchor when necessary.
36" roadway surfaces offset shown.

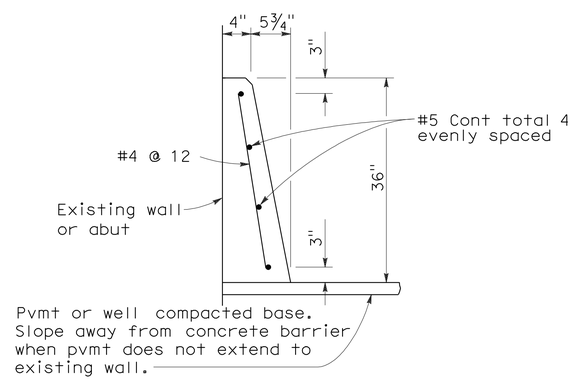

CONCRETE BARRIER TYPE 60D

STATE OF CALIFORNIA
DEPARTMENT OF TRANSPORTATION

CONCRETE BARRIER TYPE 60

NO SCALE

RSP A76A DATED JUNE 6, 2008 SUPERSEDES STANDARD PLAN A76A
DATED MAY 1, 2006 - PAGE 29 OF THE STANDARD PLANS BOOK DATED MAY 2006.

REVISED STANDARD PLAN RSP A76A

2006 REVISED STANDARD PLAN RSP A76A

5-21-08

DIST	COUNTY	ROUTE	POST MILES TOTAL PROJECT	SHEET NO.	TOTAL SHEETS
08	SBd	15	R111.6,R120.4, R124.2	13	54

Randell D. Hiatt
REGISTERED CIVIL ENGINEER

June 5, 2009
PLANS APPROVAL DATE

REGISTERED PROFESSIONAL ENGINEER
Randell D. Hiatt
No. C50200
Exp. 6-30-09
CIVIL
STATE OF CALIFORNIA

The State of California or its officers or agents shall not be responsible for the accuracy or completeness of electronic copies of this plan sheet.

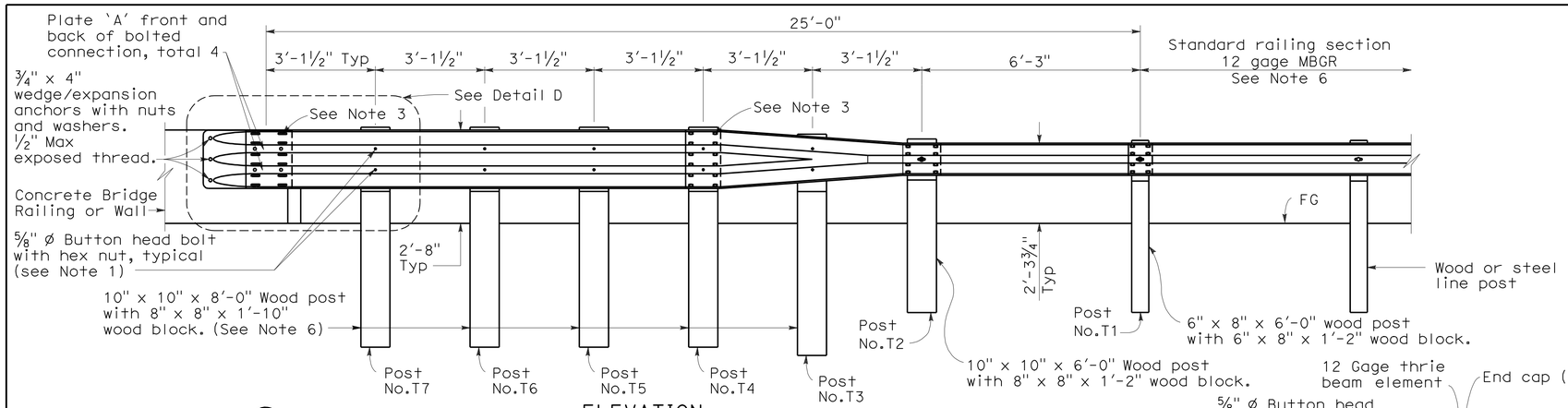

ELEVATION

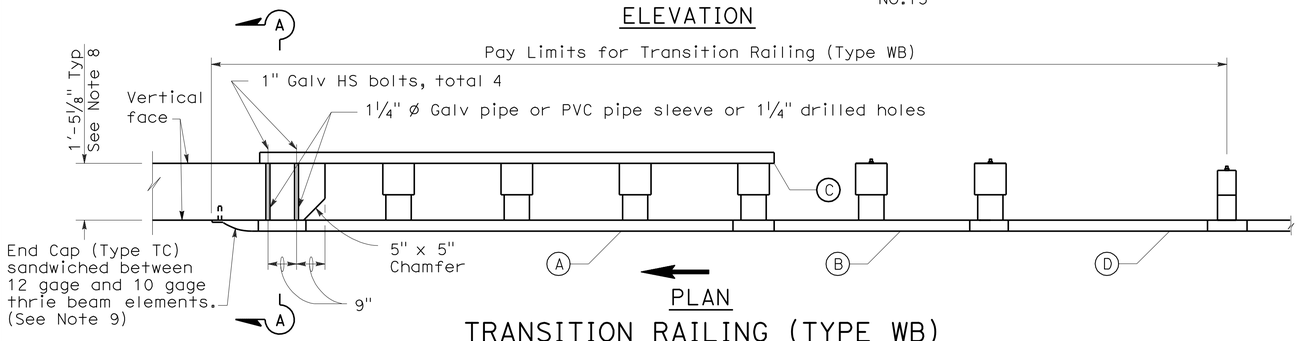

PLAN

TRANSITION RAILING (TYPE WB)

(No Blockout Attachment)

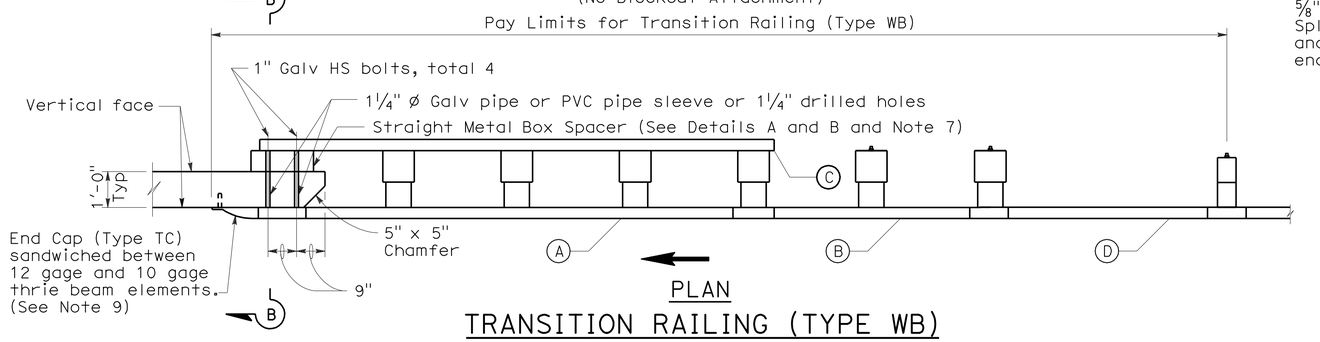

PLAN

TRANSITION RAILING (TYPE WB)

(Blockout Attachment)

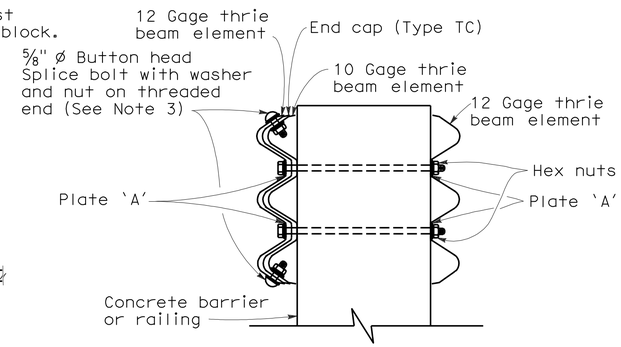

SECTION A-A

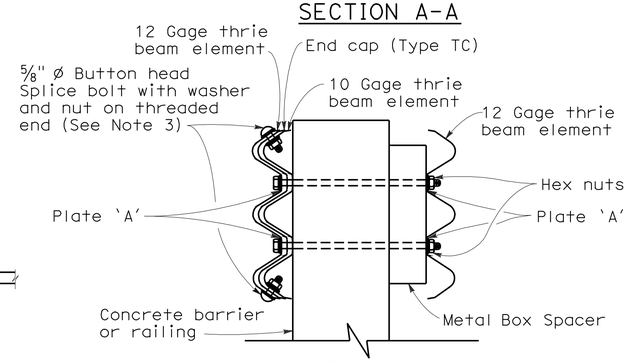

SECTION B-B

LEGEND

(A) Nested thrie beam elements (one 12 gage element nested over one 10 gage element).

(B) One 10 gage "W" beam to thrie beam element.

(C) One 12 gage thrie beam element.

(D) One 10 gage "W" beam rail element (7'-3½" length)

10 gage = 0.135" thick

12 gage = 0.108" thick

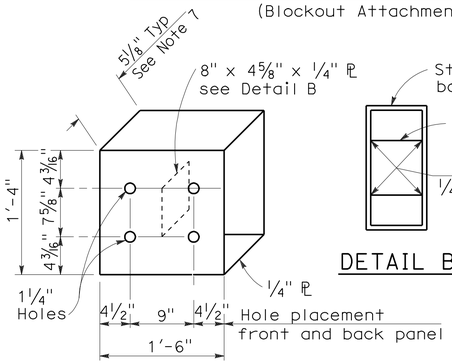

DETAIL A

STRAIGHT METAL BOX SPACER

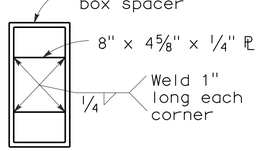

DETAIL B

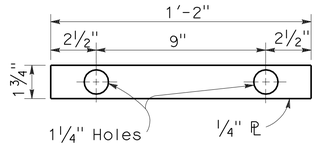

DETAIL C

PLATE 'A'

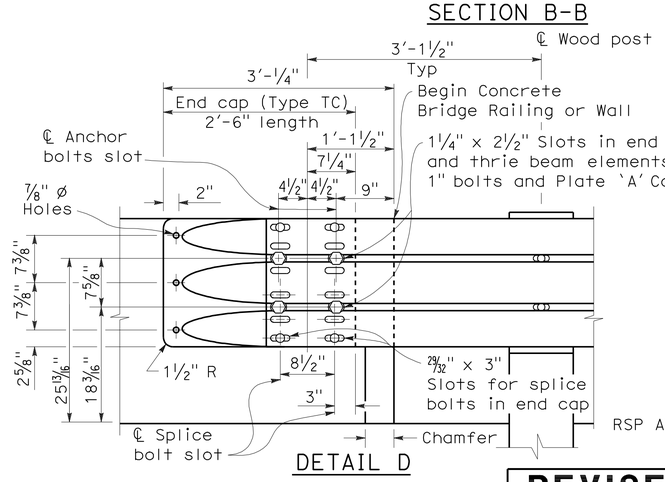

DETAIL D

NOTES:

To accompany plans dated 3-7-11

1. Use 5/8 " ø Button head bolts and hex nuts for connections to posts. No washer on rail face for bolted connections to post.
2. The nested rail elements, end cap, and 'W' beam to thrie beam element may be spliced together prior to bolting the elements to the wood post and concrete barrier or railing.
3. Exterior splice bolt holes for rail element splices at Post No.T4 and the connection to the concrete barrier or railing shall be the standard 29/32 " x 1 1/8 " slot size. Interior splice bolt holes at these locations may be increased up to 1 1/4 " ø. Only the top 2 and the bottom 2 splice bolts with washers and nuts are required for rail splices at Post No.T4 and the connection to the concrete barrier or railing.
4. Direction of adjacent traffic indicated by →.
5. The top elevation of Post Nos.T2 through T7 shall not project more than 1" above the top elevation of the rail element.
6. Typically, the railing connected to Transition Railing (Type WB) will be either standard railing section of metal beam guard railing or an approved Caltrans end treatment attached to Post No.T1.
7. The depth of the metal box spacer varies from the 5 1/8 " to 1 1/2 " and is dependent on the width of the concrete railing or wall. The combined dimension for the depth of the metal box spacer plus the width of railing or wall is typically 17 1/8 ". Where the space between the backside of the concrete railing or wall and the rear thrie beam element is less than 1 1/2 ", metal plates similar to Plate 'A' are to be used as spacers.
8. Where the width of the concrete railing or wall is greater than 17 1/8 ", wood blocks are to be used to fill the space created between the backside of Posts No.4 through No.7 and the rear thrie beam element. These wood blocks shall be 8" in width and 1'-2" in length. The dimension between the front thrie beam element and the rear thrie beam element is to match the width of the concrete railing or wall.
9. End cap may be installed over 12 gage and 10 gage thrie beam elements where transition railing is installed on the departure end of bridge railing.

STATE OF CALIFORNIA
DEPARTMENT OF TRANSPORTATION

METAL BEAM GUARD RAILING TRANSITION RAILING (TYPE WB)

NO SCALE

RSP A77J4 DATED JUNE 5, 2009 SUPERSEDES RSP A77J4 DATED JUNE 6, 2008 AND STANDARD PLAN A77J4 DATED MAY 1, 2006 - PAGE 75 OF THE STANDARD PLANS BOOK DATED MAY 2006.

REVISED STANDARD PLAN RSP A77J4

2006 REVISED STANDARD PLAN RSP A77J4

DIST	COUNTY	ROUTE	POST MILES TOTAL PROJECT	SHEET NO.	TOTAL SHEETS
08	SBd	15	R111.6,R120.4, R124.2	14	54

Randell D. Hiatt
REGISTERED CIVIL ENGINEER

June 6, 2008
PLANS APPROVAL DATE

REGISTERED PROFESSIONAL ENGINEER
Randell D. Hiatt
No. C50200
Exp. 6-30-09
CIVIL
STATE OF CALIFORNIA

The State of California or its officers or agents shall not be responsible for the accuracy or completeness of electronic copies of this plan sheet.

To accompany plans dated 3-7-11

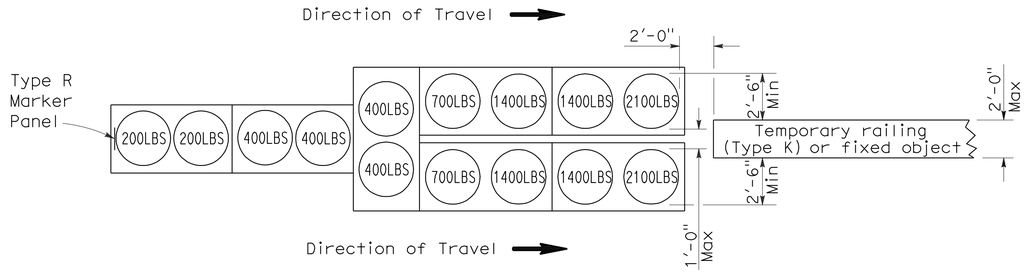

ARRAY 'TU14'

Approach speed 45 mph or more

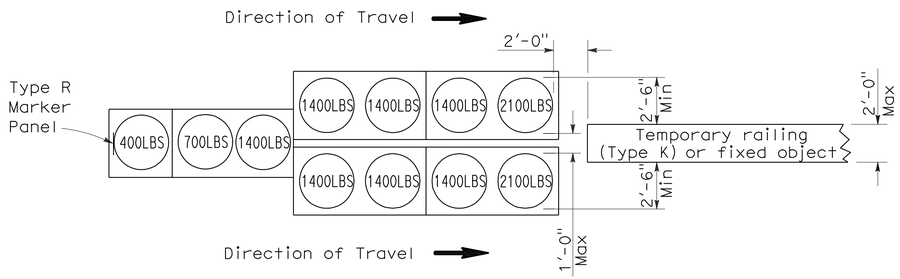

ARRAY 'TU11'

Approach speed less than 45 mph

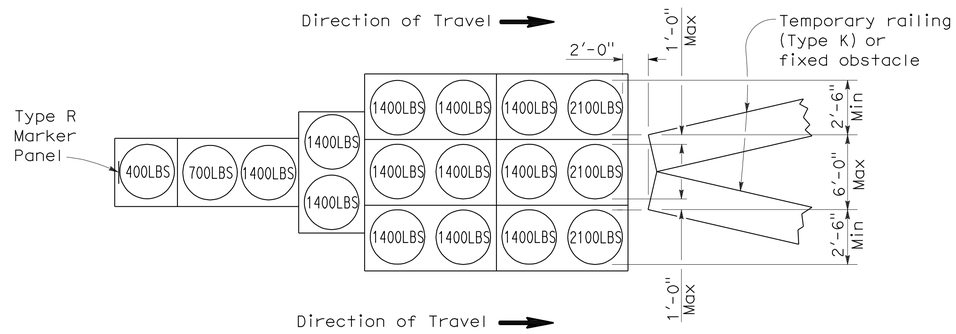

ARRAY 'TU17'

Approach speed less than 45 mph

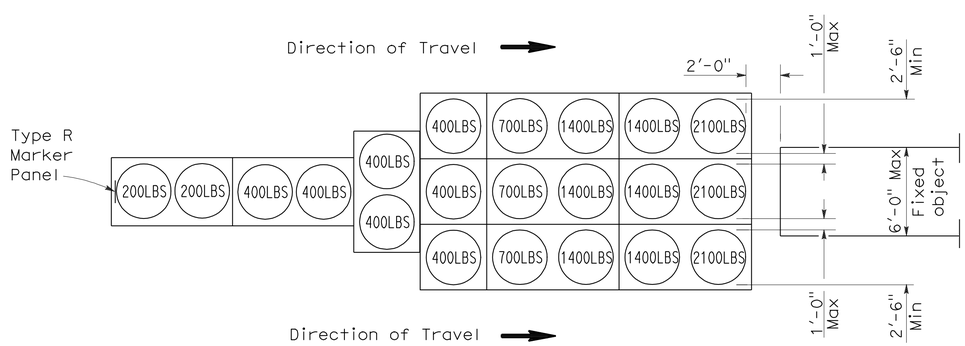

ARRAY 'TU21'

Approach speed 45 mph or more

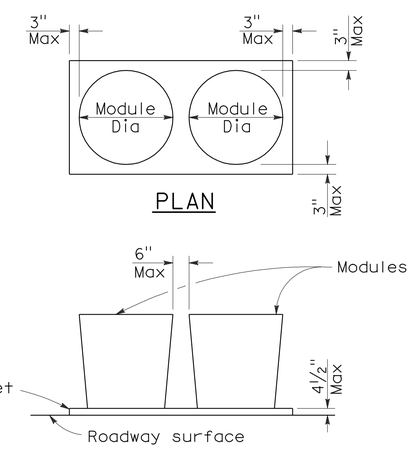

PLAN

ELEVATION

CRASH CUSHION PALLET DETAIL

See Note 7

NOTES:

1. (XXX) Indicates sand filled module location and weight of sand in pounds for each module. Module spacing is based on the greater diameter of the module.
2. All sand weights are nominal.
3. Temporary crash cushion arrays shall not encroach on the traveled way.
4. Place the top of Type R marker panel 1" below the module lid.
5. Refer to Standard Plan A73B for marker details.
6. Approach speeds indicated conform to NCHRP 350 Report criteria.
7. Use of pallets is optional.

STATE OF CALIFORNIA
DEPARTMENT OF TRANSPORTATION

TEMPORARY CRASH CUSHION, SAND FILLED (UNIDIRECTIONAL)

NO SCALE

RSP T1A DATED JUNE 6, 2008 SUPERSEDES STANDARD PLAN T1A
DATED MAY 1, 2006 - PAGE 211 OF THE STANDARD PLANS BOOK DATED MAY 2006.

REVISED STANDARD PLAN RSP T1A

2006 REVISED STANDARD PLAN RSP T1A

DIST	COUNTY	ROUTE	POST MILES TOTAL PROJECT	SHEET NO.	TOTAL SHEETS
08	SBd	15	R111.6,R120.4, R124.2	15	54

Randell D. Hiatt
REGISTERED CIVIL ENGINEER

June 6, 2008
PLANS APPROVAL DATE

REGISTERED PROFESSIONAL ENGINEER
Randell D. Hiatt
No. C50200
Exp. 6-30-09
CIVIL
STATE OF CALIFORNIA

The State of California or its officers or agents shall not be responsible for the accuracy or completeness of electronic copies of this plan sheet.

To accompany plans dated 3-7-11

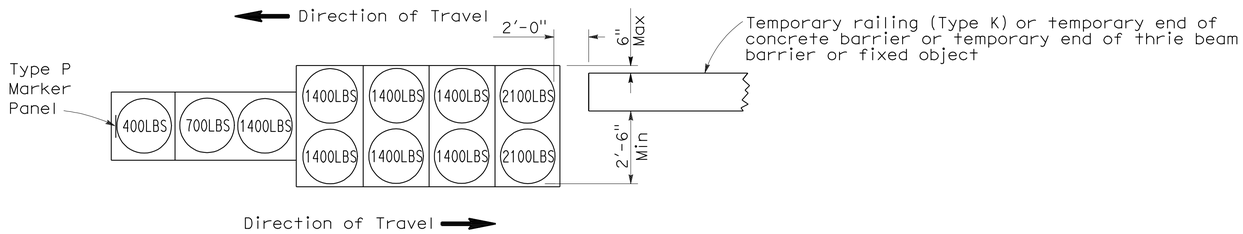

ARRAY 'TB11'

Approach speed less than 45 mph

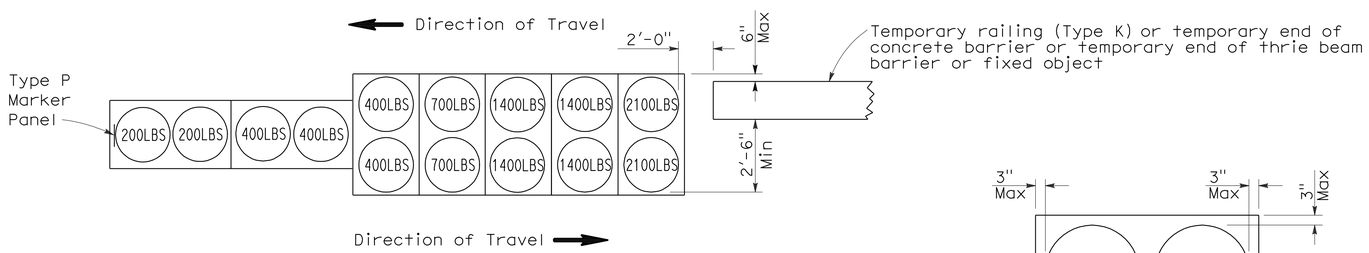

ARRAY 'TB14'

Approach speed 45 mph or more

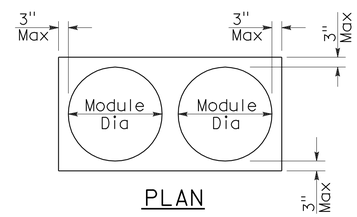

PLAN

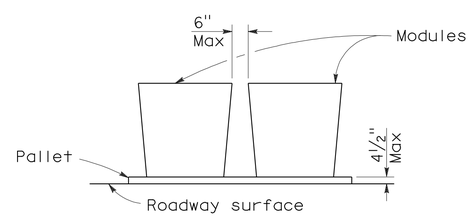

ELEVATION

CRASH CUSHION PALLET DETAIL

See Note 7

NOTES:

1. (XXX) Indicates sand filled module location and weight of sand in pounds for each module. Module spacing is based on the greater diameter of the module.
2. All sand weights are nominal.
3. Temporary crash cushion arrays shall not encroach on the traveled way.
4. Place the Type P marker panel so that the bottom of the panel rests upon the pallet.
5. Refer to Standard Plan A73B for marker details.
6. Approach speeds indicated conform to NCHRP 350 Report criteria.
7. Use of pallets is optional.

STATE OF CALIFORNIA
DEPARTMENT OF TRANSPORTATION

TEMPORARY CRASH CUSHION, SAND FILLED (BIDIRECTIONAL)

NO SCALE

RSP T1B DATED JUNE 6, 2008 SUPERSEDES STANDARD PLAN T1B
DATED MAY 1, 2006 - PAGE 212 OF THE STANDARD PLANS BOOK DATED MAY 2006.

REVISED STANDARD PLAN RSP T1B

2006 REVISED STANDARD PLAN RSP T1B

DIST	COUNTY	ROUTE	POST MILES TOTAL PROJECT	SHEET NO.	TOTAL SHEETS
08	SBd	15	R111.6,R120.4, R124.2	16	54

Randell D. Hiatt
REGISTERED CIVIL ENGINEER

June 6, 2008
PLANS APPROVAL DATE

REGISTERED PROFESSIONAL ENGINEER
Randell D. Hiatt
No. C50200
Exp. 6-30-09
CIVIL
STATE OF CALIFORNIA

The State of California or its officers or agents shall not be responsible for the accuracy or completeness of electronic copies of this plan sheet.

To accompany plans dated 3-7-11

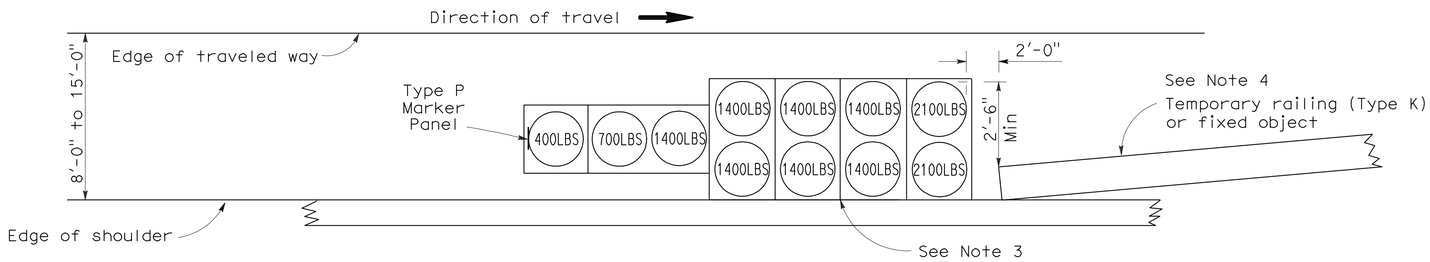

ARRAY 'TS11'

Approach speed less than 45 mph
See Note 9

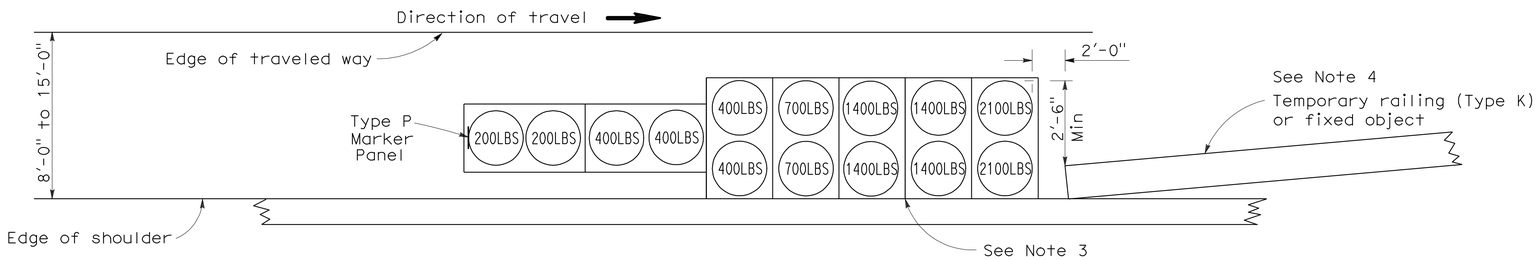

ARRAY 'TS14'

Approach speed 45 mph or more
See Note 9

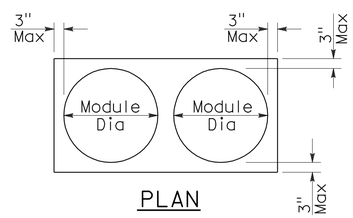

PLAN

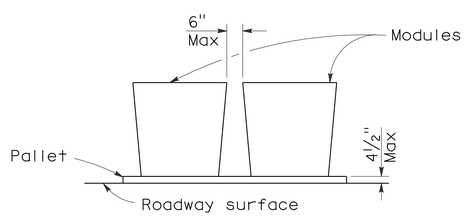

ELEVATION

CRASH CUSHION PALLET DETAIL

See Note 11

NOTES:

1. (XXX) Indicates sand filled module location and weight of sand in pounds for each module. Module spacing is based on the greater diameter of the module.
2. All sand weights are nominal.
3. The temporary crash cushion arrays shown on this plan shall be used only in locations where there will be traffic on one side of the temporary crash cushion array.
4. If the fixed object or approach end of the temporary railing is less than 15'-0" from the edge of traveled way, a temporary crash cushion is required in a construction or work zone.
5. Temporary crash cushion arrays shall not encroach on the traveled way.
6. Arrays for median shoulders shall conform to details shown on this plan for outside shoulders.
7. Place the Type P marker panel so that the bottom of the panel rests upon the pallet and faces traffic.
8. Refer to Standard Plan A73B for marker details.
9. For shoulder widths less than 8'-0", appropriate approved crash cushion protection, other than sand filled modules, shall be provided at fixed objects and at approach ends of temporary railing. The specific type of crash cushion shall be as shown on the project plans or as specified in the Special Provisions, or if not shown on the project plans or specified in the Special Provisions, shall be as approved by the Engineer.
10. Approach speeds indicated conform to NCHRP 350 Report criteria.
11. Use of pallets is optional.

STATE OF CALIFORNIA
DEPARTMENT OF TRANSPORTATION

TEMPORARY CRASH CUSHION, SAND FILLED (SHOULDER INSTALLATIONS)

NO SCALE

RSP T2 DATED JUNE 6, 2008 SUPERSEDES STANDARD PLAN T2
DATED MAY 1, 2006 - PAGE 213 OF THE STANDARD PLANS BOOK DATED MAY 2006.

REVISED STANDARD PLAN RSP T2

2006 REVISED STANDARD PLAN RSP T2

DIST	COUNTY	ROUTE	POST MILES TOTAL PROJECT	SHEET NO.	TOTAL SHEETS
08	SBd	15	R111.6,R120.4, R124.2	17	54

LICENSED LANDSCAPE ARCHITECT

April 3, 2009
PLANS APPROVAL DATE

LICENSED LANDSCAPE ARCHITECT — Robert B. Schott 3895 — Signature — 11-30-10 Renewal Date — 2-25-09 Date — STATE OF CALIFORNIA

The State of California or its officers or agents shall not be responsible for the accuracy or completeness of electronic copies of this plan sheet.

To accompany plans dated 3-7-11

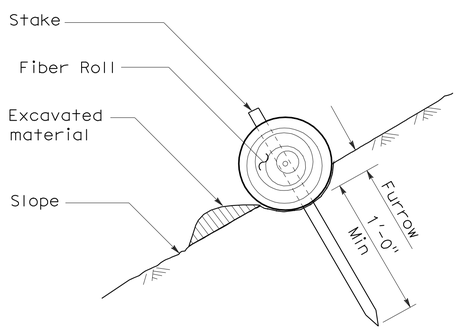

SECTION

TEMPORARY FIBER ROLL (TYPE 1)

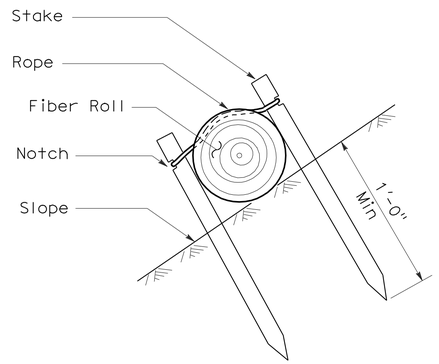

SECTION

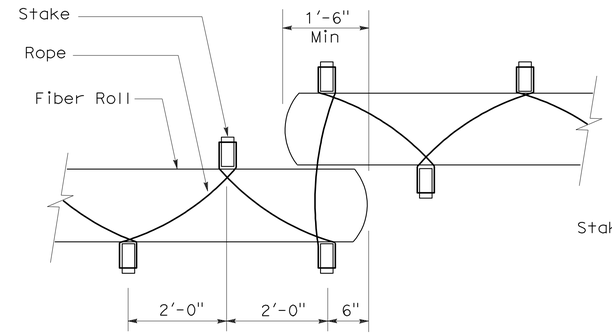

PLAN

TEMPORARY FIBER ROLL (TYPE 2)

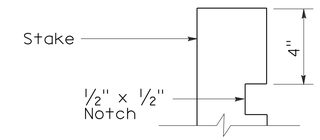

ELEVATION

STAKE NOTCH DETAIL

NOTES:

1. Temporary fiber roll spacing varies depending upon slope inclination.
2. Installations shown in the perspectives are for slope inclination of 10:1 and steeper.

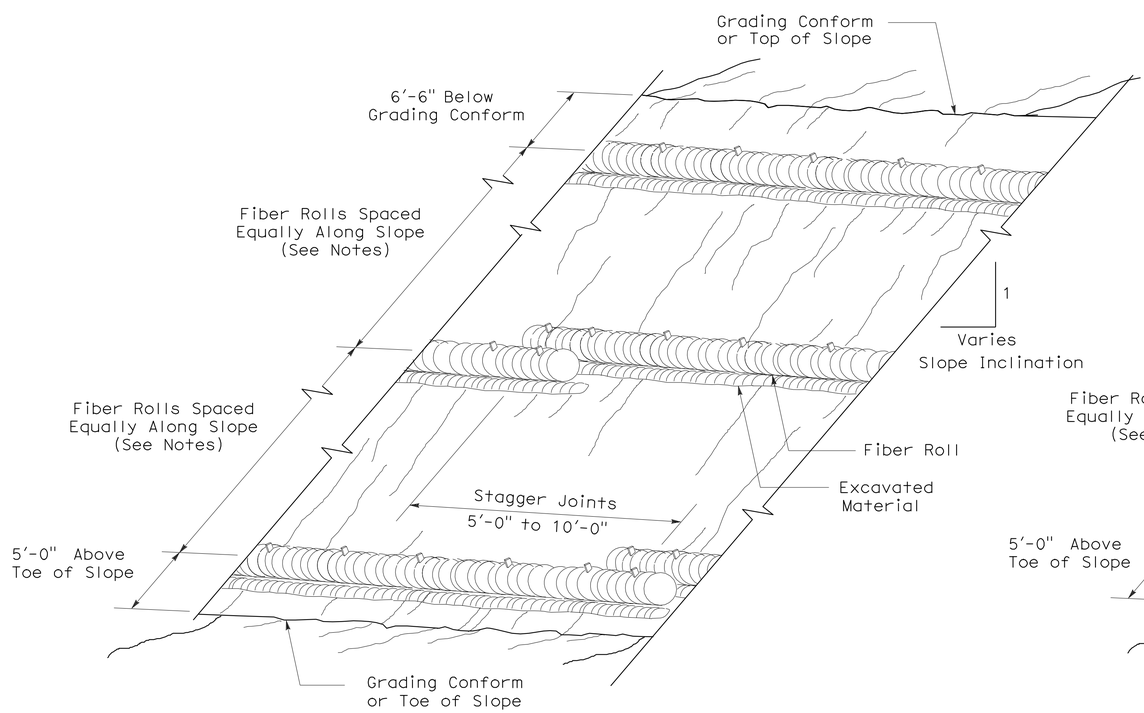

PERSPECTIVE

TEMPORARY FIBER ROLL (TYPE 1)

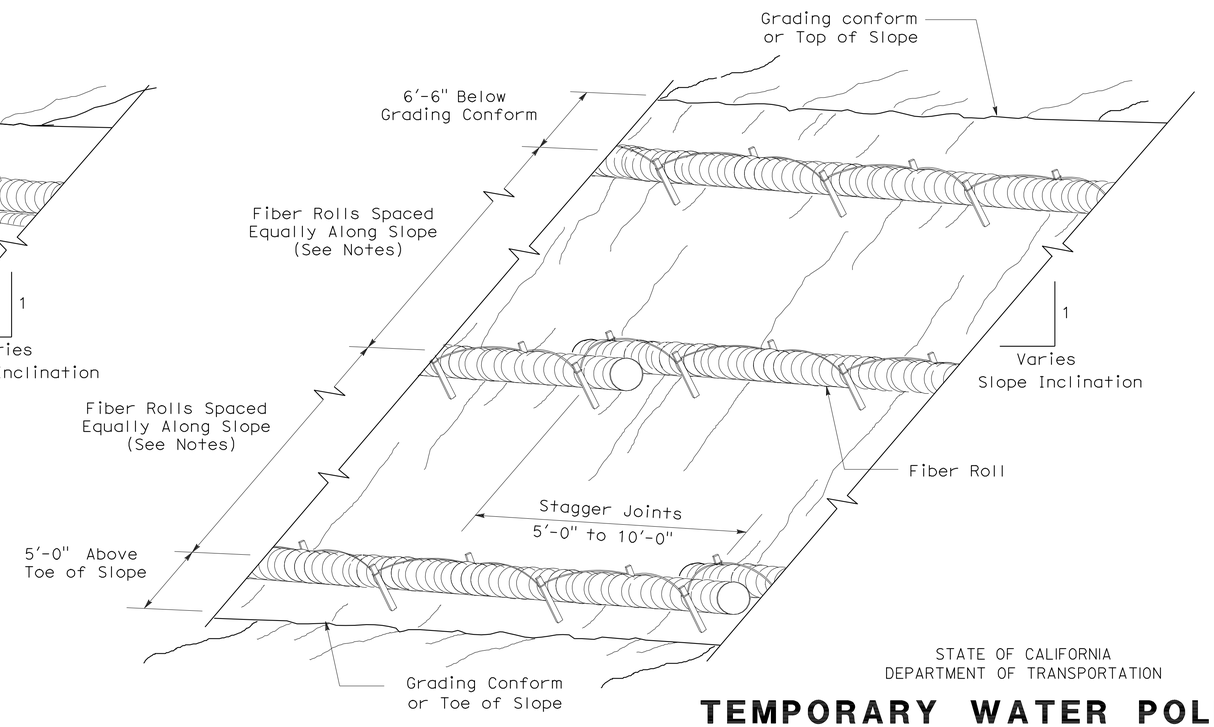

PERSPECTIVE

TEMPORARY FIBER ROLL (TYPE 2)

STATE OF CALIFORNIA
DEPARTMENT OF TRANSPORTATION

TEMPORARY WATER POLLUTION CONTROL DETAILS (TEMPORARY FIBER ROLL)

NO SCALE

RSP T56 DATED APRIL 3, 2009 SUPERSEDES STANDARD PLAN T56
DATED MAY 1, 2006 - PAGE 232 OF THE STANDARD PLANS BOOK DATED MAY 2006.

REVISED STANDARD PLAN RSP T56

2006 REVISED STANDARD PLAN RSP T56

2-23-09

DIST	COUNTY	ROUTE	POST MILES TOTAL PROJECT	SHEET NO.	TOTAL SHEETS
08	SBd	15	R111.6,R120.4, R124.2	18	54

LICENSED LANDSCAPE ARCHITECT

April 3, 2009
PLANS APPROVAL DATE

LICENSED LANDSCAPE ARCHITECT
Robert B. Schott 3025
Signature
11-30-10
Renewal Date
2-25-09
Date
STATE OF CALIFORNIA

The State of California or its officers or agents shall not be responsible for the accuracy or completeness of electronic copies of this plan sheet.

To accompany plans dated 3-7-11

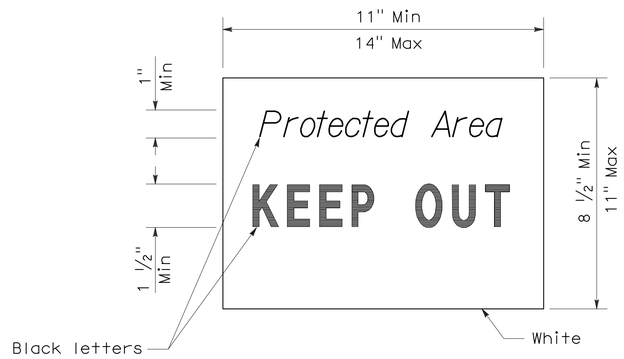

SIGN DETAIL

NOTE:

1. Temporary silt fence and temporary straw bale barrier shown for reference purposes only.

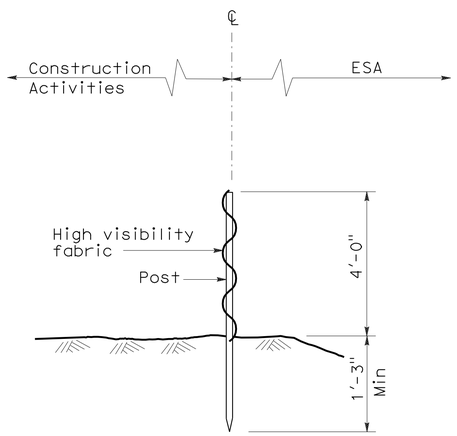

SECTION
TEMPORARY FENCE (TYPE ESA)

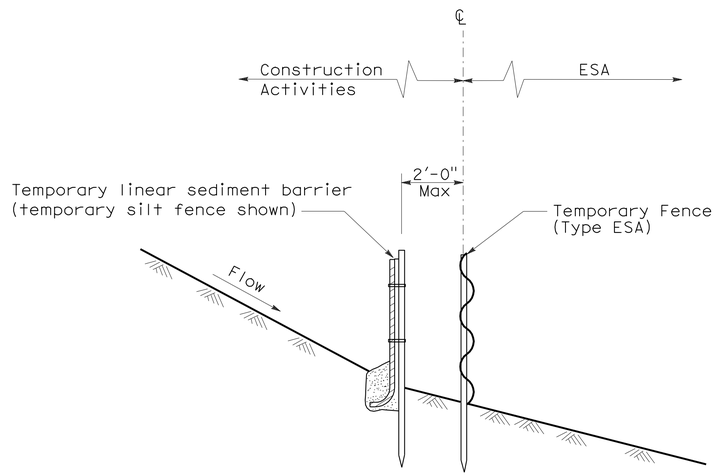

SECTION
PLACEMENT DETAIL
FOR TEMPORARY LINEAR SEDIMENT BARRIER
USED WITH TEMPORARY
FENCE (TYPE ESA)
(See Note 1)

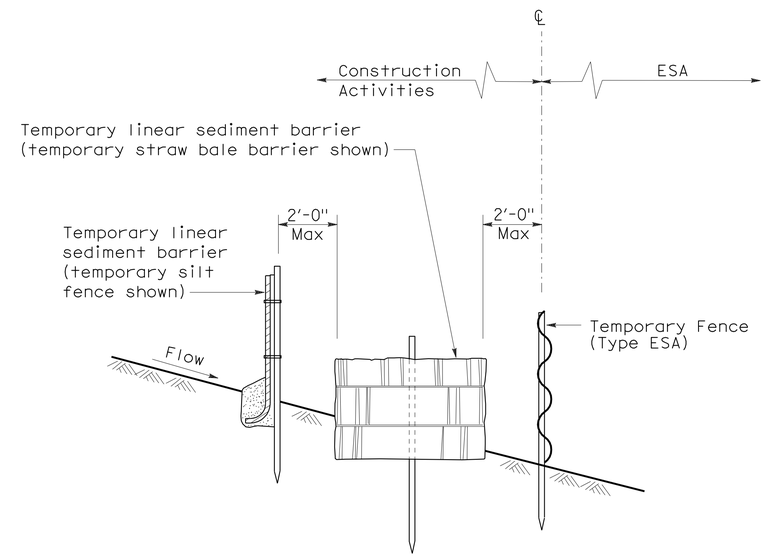

SECTION
PLACEMENT DETAIL
FOR TEMPORARY SILT FENCE
AND TEMPORARY STRAW BALE BARRIER
USED WITH TEMPORARY FENCE (TYPE ESA)
(See Note 1)

STATE OF CALIFORNIA
DEPARTMENT OF TRANSPORTATION

TEMPORARY WATER POLLUTION CONTROL DETAILS [TEMPORARY FENCE (TYPE ESA)]

NO SCALE

NSP T65 DATED APRIL 3, 2009 SUPPLEMENTS
THE STANDARD PLANS BOOK DATED MAY 2006.

NEW STANDARD PLAN NSP T65

2006 NEW STANDARD PLAN NSP T65

DIST	COUNTY	ROUTE	POST MILES TOTAL PROJECT	SHEET No	TOTAL SHEETS
08	SBd	15	R111.6,R120.4, R124.2	19	54

REGISTERED CIVIL ENGINEER — DATE 12-02-10

3-7-11
PLANS APPROVAL DATE

The State of California or its officers or agents shall not be responsible for the accuracy or completeness of electronic copies of this plan sheet.

REGISTERED PROFESSIONAL ENGINEER — Leon Valla No. 45351 Exp. 09-30-12 CIVIL — STATE OF CALIFORNIA

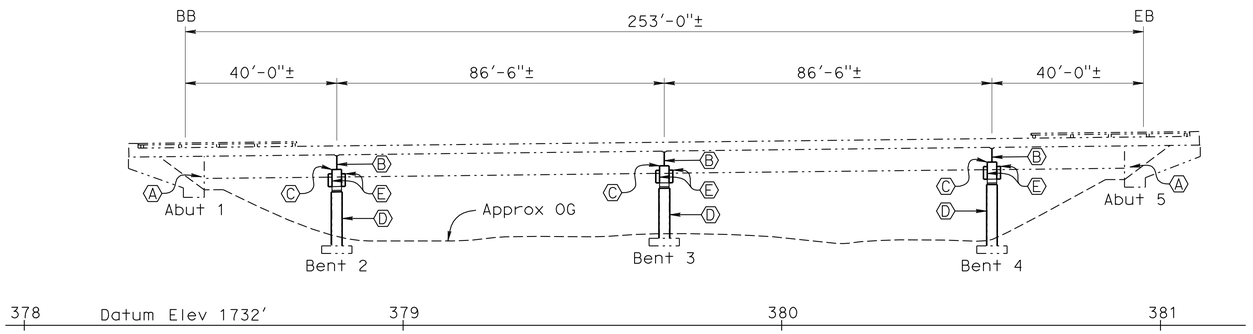

ELEVATION

1" = 20'-0"

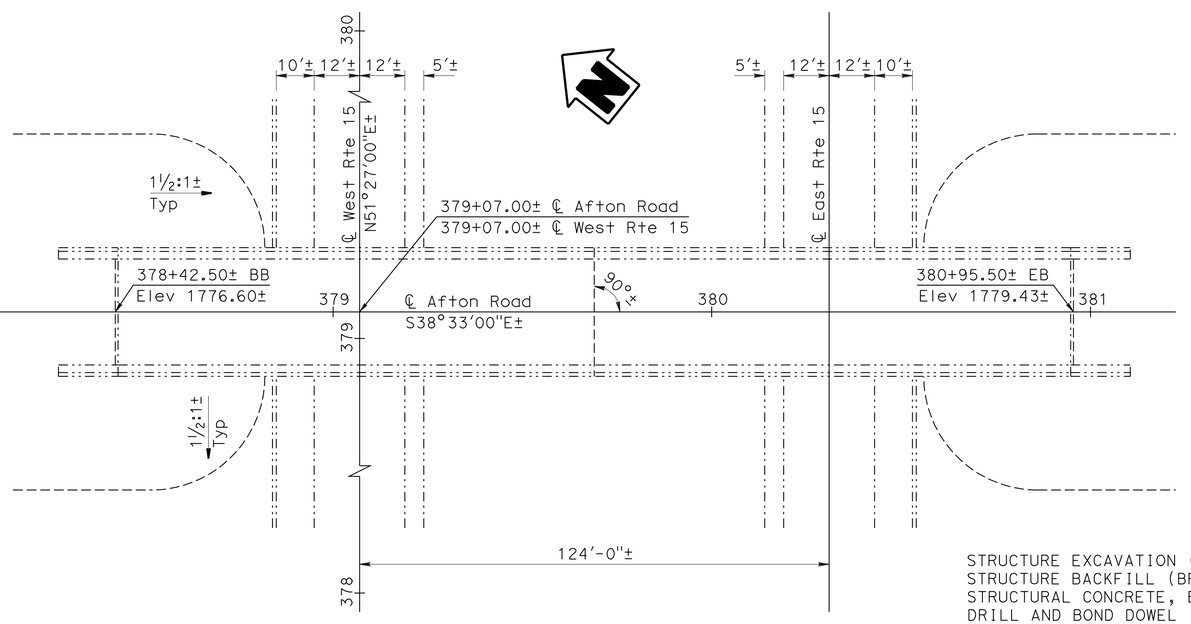

PLAN

1" = 20'-0"

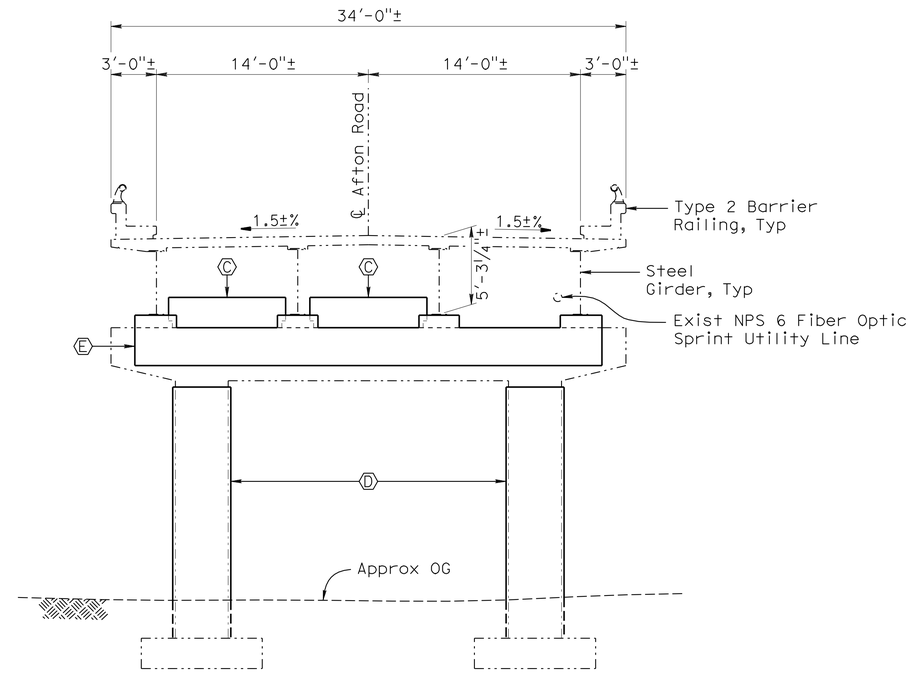

TYPICAL SECTION

1" = 5'-0"

LEGEND

- Indicates Existing Structures
- (A) Abutment Retrofit consisting of Bolsters, Shear Keys, and Catcher Blocks
- (B) Continuity Plates
- (C) Transverse Shear Keys
- (D) Composite Column Casings
- (E) Catcher Beams each side ℄ of Bents (Typ)

For Index To Plans see "INDEX TO PLANS" sheet

QUANTITIES

STRUCTURE EXCAVATION (BRIDGE)	7	CY
STRUCTURE BACKFILL (BRIDGE)	7	CY
STRUCTURAL CONCRETE, BRIDGE	52	CY
DRILL AND BOND DOWEL	955	LF
DRILL AND BOND DOWEL (CHEMICAL ADHESIVE)	112	EA
CORE AND PRESSURE GROUT DOWELS	60	LF
BAR REINFORCING STEEL (BRIDGE)	16,780	LB
COMPOSITE COLUMN CASING	1,125	SQFT
MISCELLANEOUS METAL (BRIDGE)	4,928	LB

Matt Holm
DESIGN ENGINEER

	BY	CHECKED
DESIGN	Paul Mak	Leon Valla
DETAILS	Federico Mendoza	Paul Mak
QUANTITIES	Paul Mak	Jeff Klieby

LOAD & RESISTANCE FACTOR DESIGN — LIVE LOADING: HL93 W/"LOW-BOY"; PERMIT DESIGN VEHICLE

	BY	CHECKED
LAYOUT	Federico Mendoza	Paul Mak
SPECIFICATIONS	X	PLANS AND SPECS COMPARED Jennifer Ramirez

ORIGINAL SCALE IN INCHES FOR REDUCED PLANS 0 1 2 3

STATE OF CALIFORNIA
DEPARTMENT OF TRANSPORTATION

DIVISION OF ENGINEERING SERVICES
STRUCTURE DESIGN
DESIGN BRANCH 12

CU 08
EA 0G4801

BRIDGE NO. 54-0364
POST MILE 111.6

AFTON ROAD OC (SEISMIC RETROFIT)
GENERAL PLAN

DISREGARD PRINTS BEARING EARLIER REVISION DATES

REVISION DATES: 08-26-10 11-19-10 12-02-10 12-15-10 08-06-10 08-10-10 08-26-10 10-05-10 10-26-10

SHEET 1 OF 12

USERNAME => trstrk DATE PLOTTED => 08-MAR-2011 TIME PLOTTED => 10:10

STRUCTURES DESIGN GENERAL PLAN SHEET (ENGLISH) (REV.07-24-06)

FILE => 54-0364-a-gp01.dgn

DIST	COUNTY	ROUTE	POST MILES TOTAL PROJECT	SHEET No	TOTAL SHEETS
08	SBd	15	R111.6,R120.4, R124.2	20	54

REGISTERED CIVIL ENGINEER 12-02-10 DATE

3-7-11
PLANS APPROVAL DATE

REGISTERED PROFESSIONAL ENGINEER Leon Valla No. 45351 Exp. 09-30-12 CIVIL STATE OF CALIFORNIA

The State of California or its officers or agents shall not be responsible for the accuracy or completeness of electronic copies of this plan sheet.

INDEX TO PLANS

SHEET NO.	TITLE
1	GENERAL PLAN
2	INDEX TO PLANS
3	ABUTMENT DETAILS NO. 1
4	ABUTMENT DETAILS NO. 2
5	ABUTMENT DETAILS NO. 3
6	BENT DETAILS NO. 1
7	BENT DETAILS NO. 2
8	BENT DETAILS NO. 3
9	BENT DETAILS NO. 4
10	COMPOSITE COLUMN CASING
11	COMPOSITE COLUMN CASING DETAILS
12	CONTINUITY PLATE DETAILS

STANDARD PLANS DATED MAY 2006

A10A	ACRONYMS AND ABBREVIATIONS (SHEET 1 OF 2)
A10B	ACRONYMS AND ABBREVIATIONS (SHEET 2 OF 2)
BO-1	BRIDGE DETAILS
BO-3	BRIDGE DETAILS

STANDARD PLAN SHEET NO.

DETAIL NO.

GENERAL NOTES
LOAD AND RESISTANCE FACTOR DESIGN

DESIGN: AASHTO LRFD Bridge Design Specifications, 4th Edition with California Amendments.

SEISMIC DESIGN: Caltrans Seismic Design Criteria (SDC) Version 1.4 June 2006

SEISMIC LOADING: See "SITE SPECIFIC ARS CURVE"

REINFORCED CONCRETE:
f_y = 60 ksi
f'_c = 4.0 ksi unless otherwise noted
f'_c = 5.0 ksi for all Catcher Beams only

STEEL BARS AND PLATE:
$f_{y_{min}}$ = 55 ksi for all plates 1" thick and less
$f_{y_{min}}$ = 50 ksi for all plates greater than 1" thick

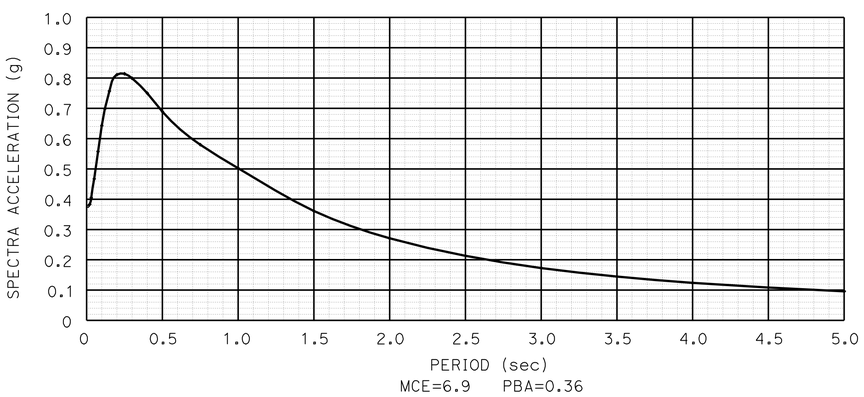

ACCELERATION RESPONSE SPECTRA (WITH 5% DAMPING)

SITE SPECIFIC ARS CURVE

No Scale

	BY	CHECKED
DESIGN	L. Valla	P. Mak
DETAILS	F. Mendoza	L. Valla
QUANTITIES	P. Mak	J. Klieby

STATE OF CALIFORNIA
DEPARTMENT OF TRANSPORTATION

DIVISION OF ENGINEERING SERVICES
STRUCTURE DESIGN
DESIGN BRANCH 12

BRIDGE NO. 54-0364
POST MILE 111.6

AFTON ROAD OC (SEISMIC RETROFIT)
INDEX TO PLANS

STRUCTURES DESIGN DETAIL SHEET (ENGLISH) (REV. 10/25/05)

ORIGINAL SCALE IN INCHES FOR REDUCED PLANS 0 1 2 3

CU 08
EA 0G4801

DISREGARD PRINTS BEARING EARLIER REVISION DATES

REVISION DATES: 10-14-10 12-02-10

SHEET 2 OF 12

FILE => 54-0364-a-itp.dgn

USERNAME => trstrk DATE PLOTTED => 08-MAR-2011 TIME PLOTTED => 10:10

DIST	COUNTY	ROUTE	POST MILES TOTAL PROJECT	SHEET No	TOTAL SHEETS
08	SBd	15	R111.6,R120.4, R124.2	21	54

REGISTERED CIVIL ENGINEER 12-02-10 DATE

3-7-11
PLANS APPROVAL DATE

The State of California or its officers or agents shall not be responsible for the accuracy or completeness of electronic copies of this plan sheet.

REGISTERED PROFESSIONAL ENGINEER Leon Valla No. 45351 Exp. 09-30-12 CIVIL STATE OF CALIFORNIA

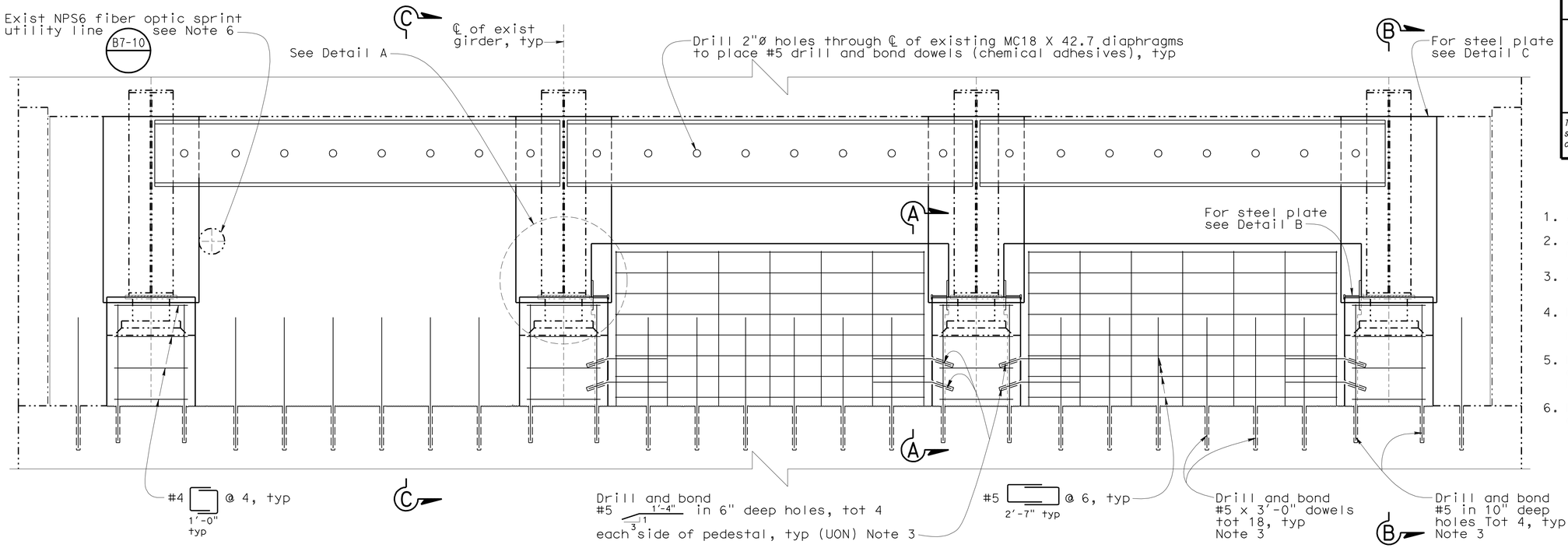

ELEVATION

3/4"=1'-0"

Note 1 & 2

NOTES:

1. Abutment 1 shown, abutment 5 similar.
2. All new and existing reinforcement not shown for clarity.
3. All existing reinforcement must be left undamaged.
4. For "Section A-A", "Section B-B" and "Section C-C", see "Abutment Details No. 2" sheet.
5. For "Detail A", "Detail B", "Detail C" and "Detail D", see "Abutment Details No. 3" sheet.
6. Match same utility opening details as existing abutment backwall.

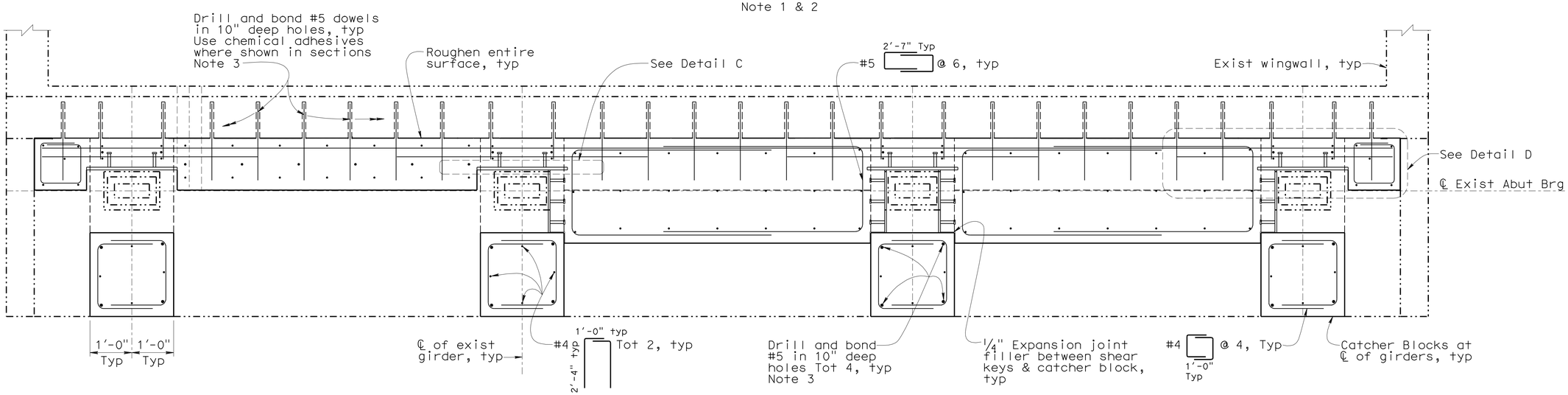

PLAN

3/4"=1'-0"

Note 1 & 2

NOTE:
THE CONTRACTOR SHALL VERIFY ALL CONTROLLING FIELD DIMENSIONS BEFORE ORDERING OR FABRICATING ANY MATERIAL.

	BY	CHECKED
DESIGN	Paul Mak	Leon Valla
DETAILS	Ton Doan	Leon Valla/Paul Mak
QUANTITIES	Paul Mak	Jeff Klieby

STATE OF CALIFORNIA
DEPARTMENT OF TRANSPORTATION

DIVISION OF ENGINEERING SERVICES
STRUCTURE DESIGN
DESIGN BRANCH 12

BRIDGE NO. 54-0364
POST MILE 111.6

AFTON ROAD OC (SEISMIC RETROFIT)
ABUTMENT DETAILS NO. 1

STRUCTURES DESIGN DETAIL SHEET (ENGLISH) (REV. 10/25/05)

ORIGINAL SCALE IN INCHES FOR REDUCED PLANS 0 1 2 3

CU 08
EA 0G4801

DISREGARD PRINTS BEARING EARLIER REVISION DATES

REVISION DATES: 08-26-10 09-08-10 09-13-10 10-07-10 10-14-10 10-18-10 10-26-10 11-04-10 11-10-10 12-02-10

SHEET 3 OF 12

FILE => 54-0364-f-abut-dt01.dgn

USERNAME => trsttrk DATE PLOTTED => 08-MAR-2011 TIME PLOTTED => 10:10

DIST	COUNTY	ROUTE	POST MILES TOTAL PROJECT	SHEET No	TOTAL SHEETS
08	SBd	15	R111.6,R120.4, R124.2	22	54

REGISTERED CIVIL ENGINEER 12-02-10 DATE

3-7-11
PLANS APPROVAL DATE

REGISTERED PROFESSIONAL ENGINEER Leon Valla No. 45351 Exp. 09-30-12 CIVIL STATE OF CALIFORNIA

The State of California or its officers or agents shall not be responsible for the accuracy or completeness of electronic copies of this plan sheet.

NOTES:

1. All existing reinforcement must be left undamaged.
2. Not all existing reinforcement shown for clarity.

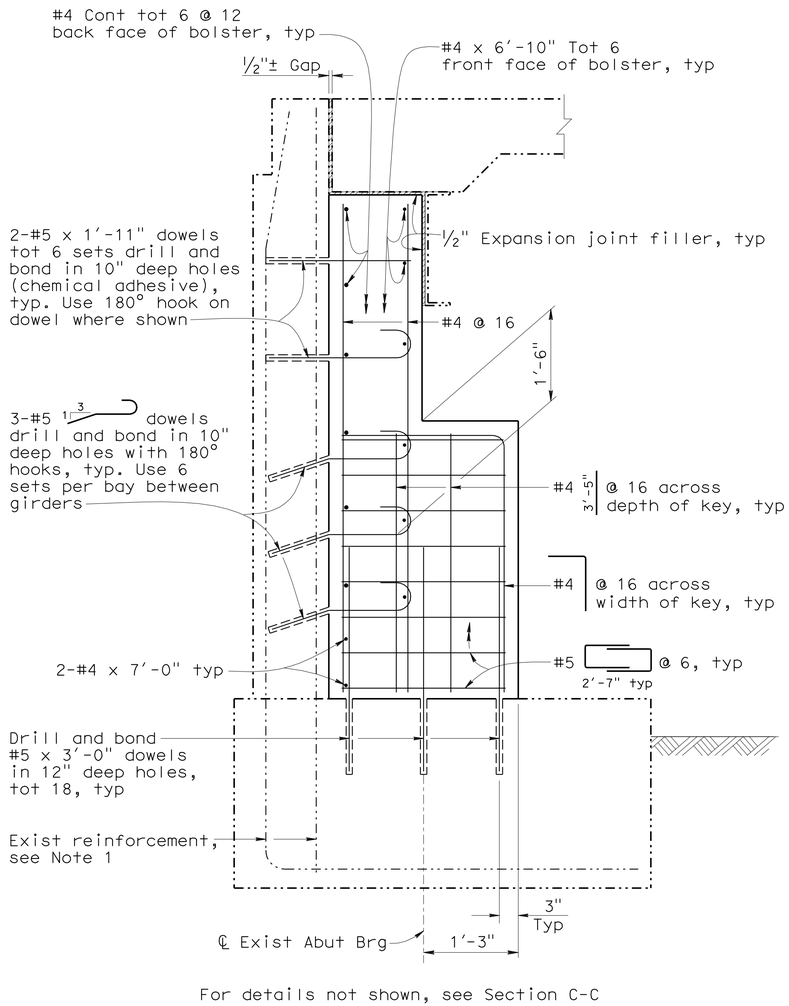

For details not shown, see Section C-C

SECTION A-A

1"=1'-0"

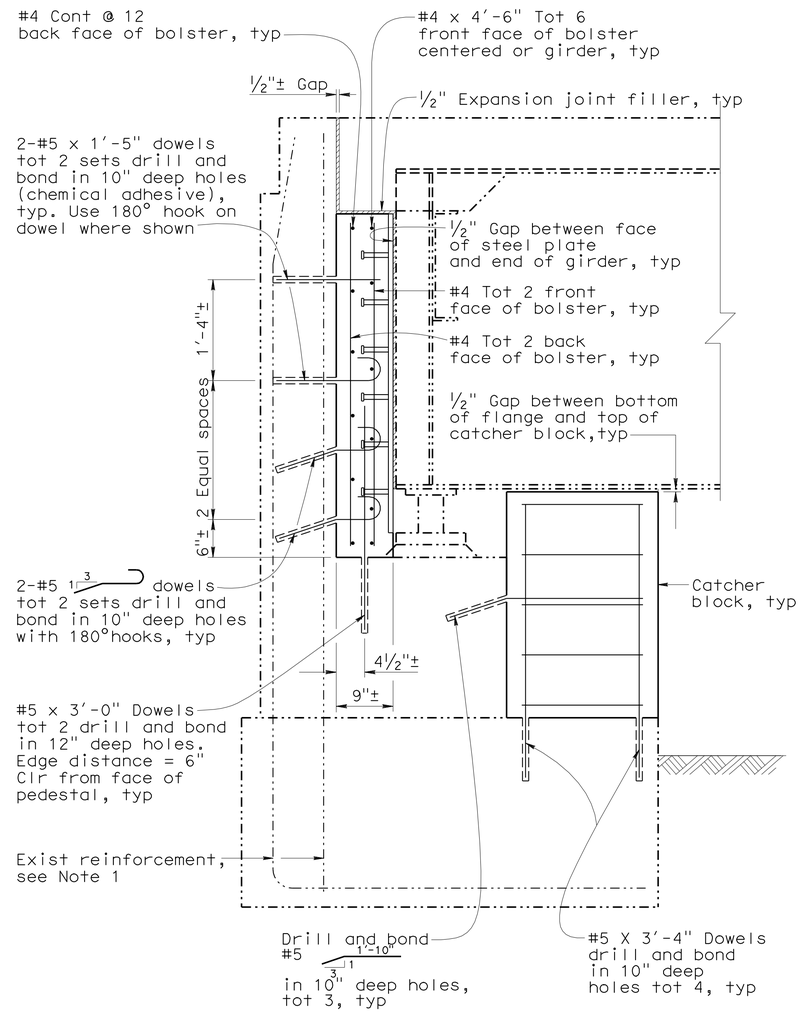

SECTION B-B

1"=1'-0"

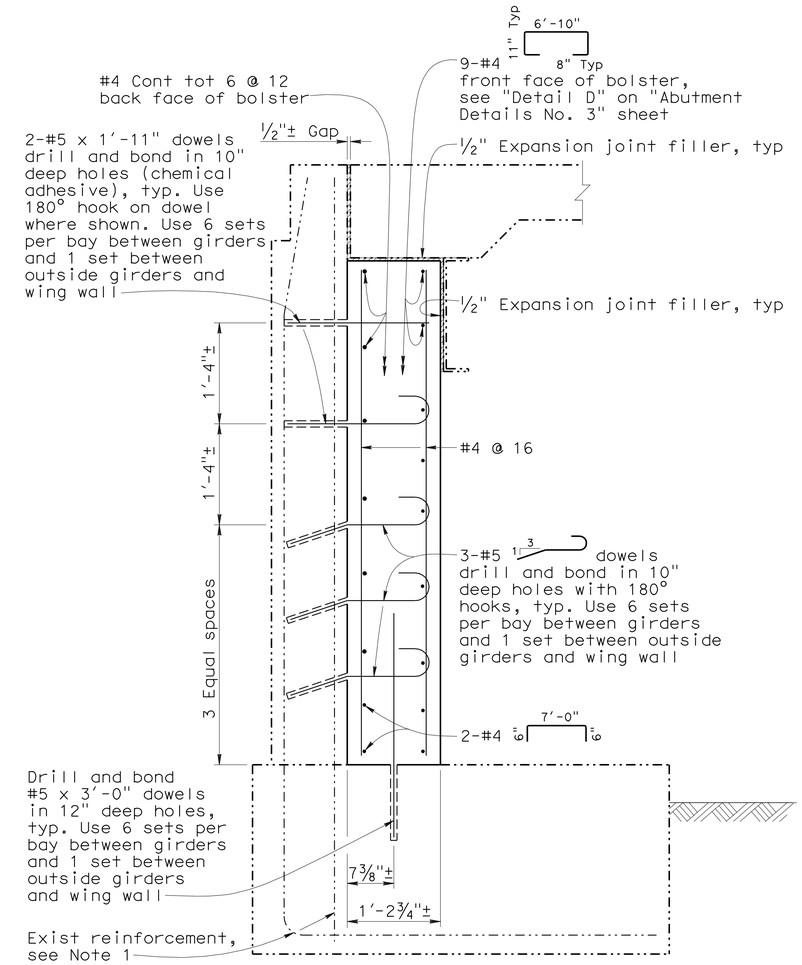

SECTION C-C

1"=1'-0"

NOTE:
THE CONTRACTOR SHALL VERIFY ALL CONTROLLING FIELD DIMENSIONS BEFORE ORDERING OR FABRICATING ANY MATERIAL.

	BY	CHECKED
DESIGN	Paul Mak	Leon Valla
DETAILS	Ton Doan	Leon Valla/Paul Mak
QUANTITIES	Paul Mak	Jeff Klieby

STATE OF CALIFORNIA
DEPARTMENT OF TRANSPORTATION

DIVISION OF ENGINEERING SERVICES
STRUCTURE DESIGN
DESIGN BRANCH 12

BRIDGE NO. 54-0364
POST MILE 111.6

AFTON ROAD OC (SEISMIC RETROFIT)
ABUTMENT DETAILS NO. 2

STRUCTURES DESIGN DETAIL SHEET (ENGLISH) (REV. 10/25/05)

ORIGINAL SCALE IN INCHES FOR REDUCED PLANS 0 1 2 3

CU 08
EA 0G4801

DISREGARD PRINTS BEARING EARLIER REVISION DATES

REVISION DATES: 10-12-10 10-14-10 10-18-10 10-26-10 11-04-10 11-08-10 12-02-10

SHEET 4 OF 12

FILE => 54-0364-f-abut-dt02.dgn

DATE PLOTTED => 08-MAR-2011 TIME PLOTTED => 10:10
trstrk

DIST	COUNTY	ROUTE	POST MILES TOTAL PROJECT	SHEET No	TOTAL SHEETS
08	SBd	15	R111.6,R120.4, R124.2	23	54

REGISTERED CIVIL ENGINEER 12-02-10 DATE

3-7-11
PLANS APPROVAL DATE

REGISTERED PROFESSIONAL ENGINEER Leon Valla No. 45351 Exp. 09-30-12 CIVIL STATE OF CALIFORNIA

The State of California or its officers or agents shall not be responsible for the accuracy or completeness of electronic copies of this plan sheet.

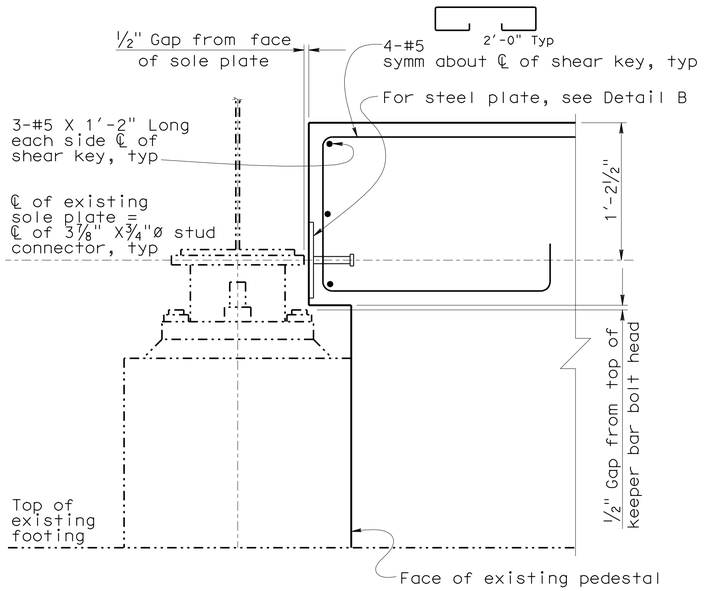

DETAIL A
1 1/2"=1'-0"

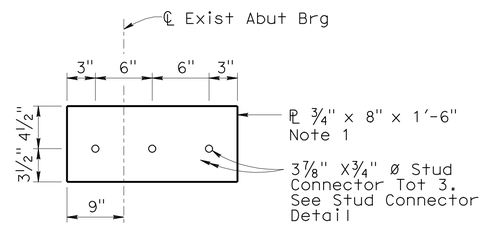

DETAIL B
1 1/2"=1'-0"

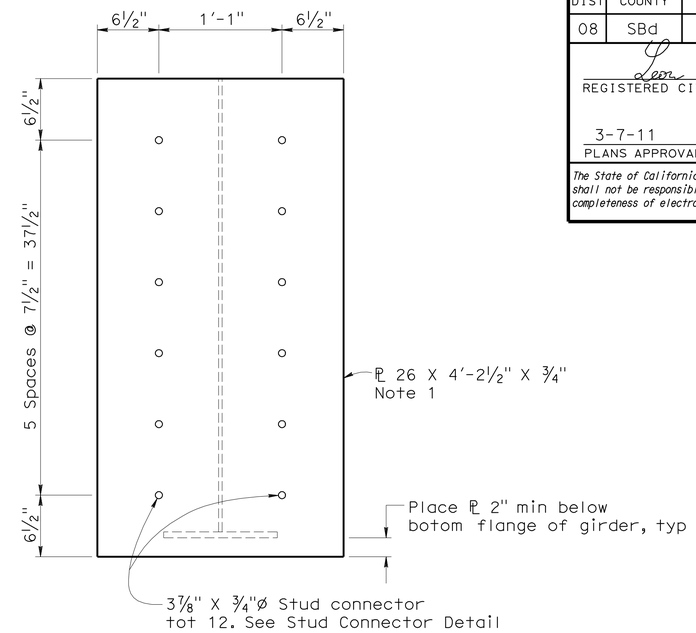

DETAIL C
1 1/2"=1'-0"

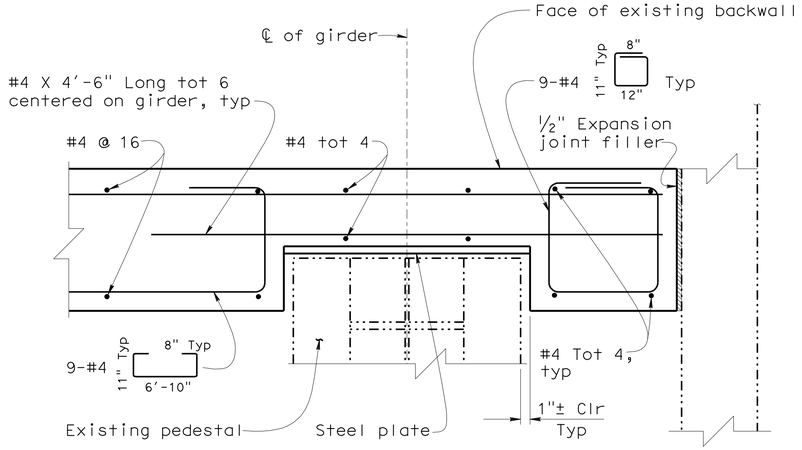

NOTE: Existing abutment and all reinforcement not shown for clarity

DETAIL D
1 1/2"=1'-0"

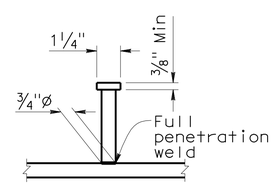

STUD CONNECTOR DETAIL
3"=1'-0"
Note 1

NOTE:

1. Galvanize assembly after fabrication.

NOTE:
THE CONTRACTOR SHALL VERIFY ALL CONTROLLING FIELD DIMENSIONS BEFORE ORDERING OR FABRICATING ANY MATERIAL.

	BY	CHECKED
DESIGN	Paul Mak	Leon Valla
DETAILS	Ton Doan	Leon Valla/Paul Mak
QUANTITIES	Paul Mak	Jeff Klieby

STATE OF CALIFORNIA
DEPARTMENT OF TRANSPORTATION

DIVISION OF ENGINEERING SERVICES
STRUCTURE DESIGN
DESIGN BRANCH 12

BRIDGE NO. 54-0364
POST MILE 111.6

AFTON ROAD OC (SEISMIC RETROFIT)
ABUTMENT DETAILS NO. 3

STRUCTURES DESIGN DETAIL SHEET (ENGLISH) (REV. 10/25/05)

ORIGINAL SCALE IN INCHES FOR REDUCED PLANS 0 1 2 3

CU 08
EA 0G4801

DISREGARD PRINTS BEARING EARLIER REVISION DATES

REVISION DATES: 10-14-10 10-18-10 10-26-10 11-05-10 12-02-10

SHEET 5 OF 12

FILE => 54-0364-f-abut-dt03.dgn

USERNAME => trstrk DATE PLOTTED => 08-MAR-2011 TIME PLOTTED => 10:10

DIST	COUNTY	ROUTE	POST MILES TOTAL PROJECT	SHEET No	TOTAL SHEETS
08	SBd	15	R111.6,R120.4, R124.2	24	54

REGISTERED CIVIL ENGINEER 12-02-10 DATE

3-7-11
PLANS APPROVAL DATE

REGISTERED PROFESSIONAL ENGINEER Leon Valla No. 45351 Exp. 09-30-12 CIVIL STATE OF CALIFORNIA

The State of California or its officers or agents shall not be responsible for the accuracy or completeness of electronic copies of this plan sheet.

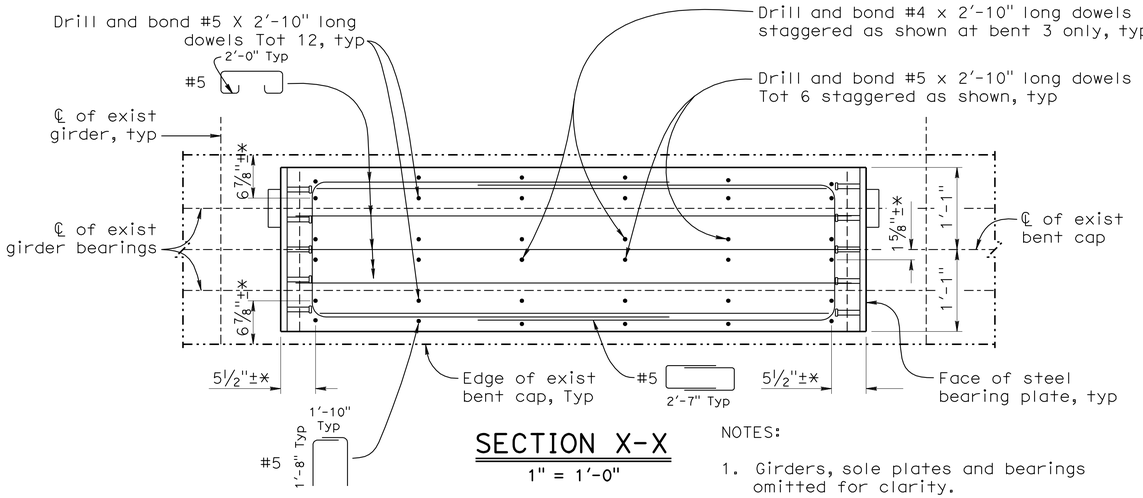

SECTION X-X
1" = 1'-0"

NOTES:

1. Girders, sole plates and bearings omitted for clarity.
2. * ℄ for location of #5 drill and bond dowel typical.

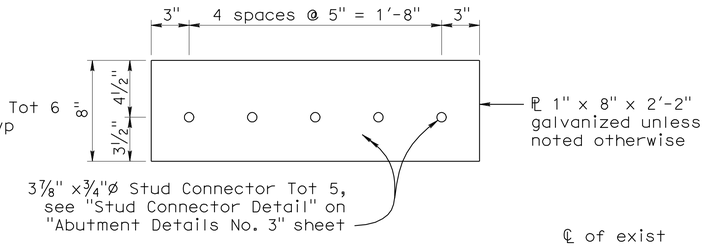

DETAIL B
No Scale

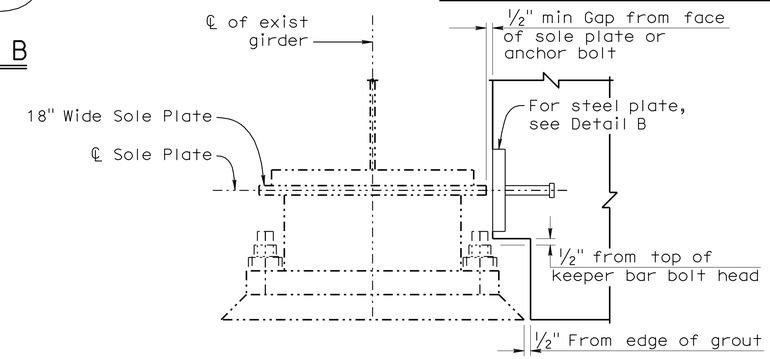

DETAIL C AT 18" WIDE SOLE PLATE
No Scale

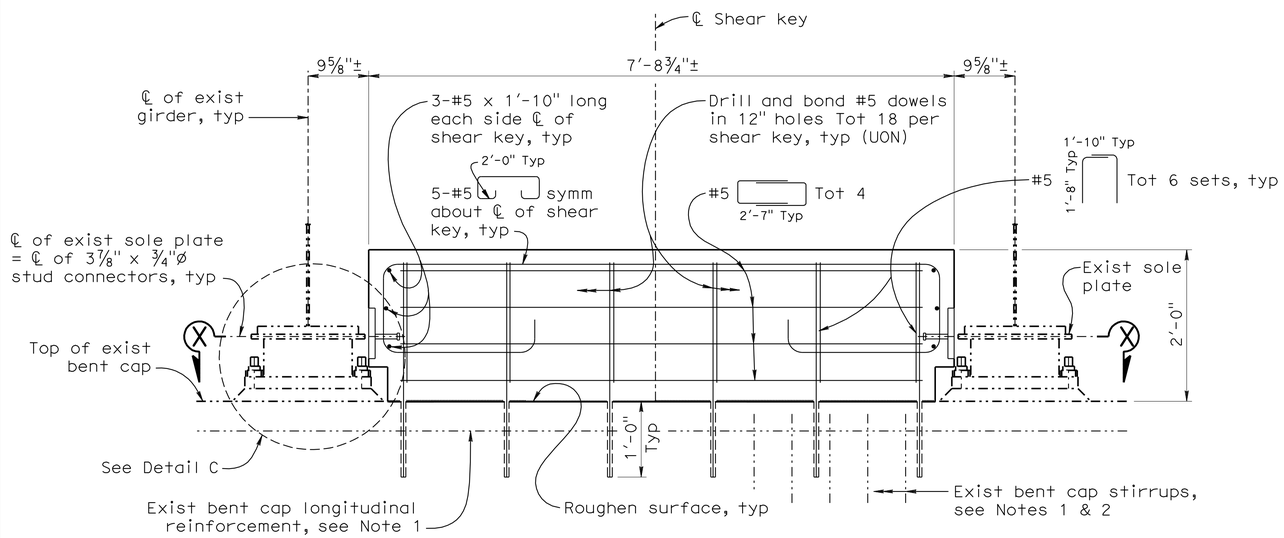

TRANSVERSE SHEAR KEY ELEVATION
(PER BAYS SHOWN ON GENERAL PLAN
TYPICAL SECTION AT BENTS 2, 3, AND 4)
1" = 1'-0"

NOTES:

1. All existing reinforcement including bent cap stirrups to remain undamaged.
2. Not all bent cap stirrups shown for clarity.

NOTE:
THE CONTRACTOR SHALL VERIFY ALL CONTROLLING FIELD DIMENSIONS BEFORE ORDERING OR FABRICATING ANY MATERIAL.

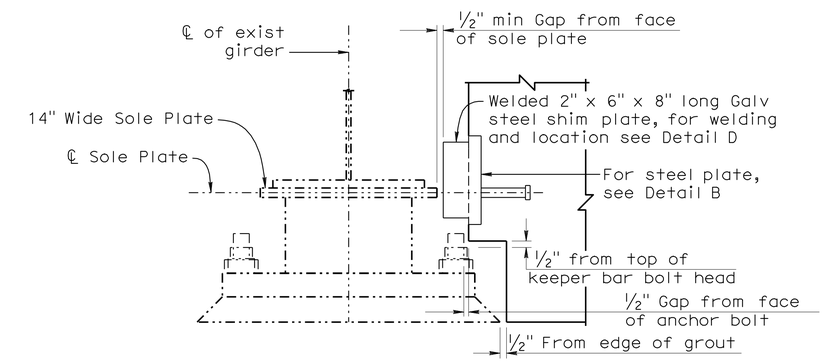

DETAIL C AT 14" WIDE SOLE PLATE
No Scale

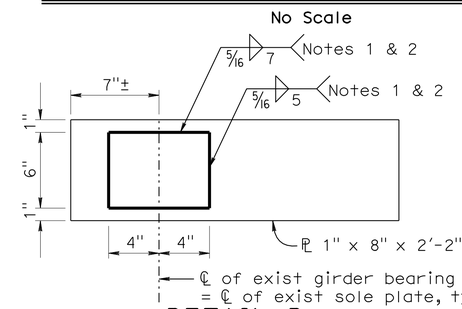

DETAIL D
No Scale
Note 3 & 4

NOTES:

1. No welding on return ends
2. Fy = 50 ksi
3. Galvanize assembly after fabrication
4. 3⅞" X¾"ø Stud connectors omitted for clarity

DESIGN	BY L. Valla	CHECKED P. Mak	
DETAILS	BY F. Mendoza	CHECKED L. Valla	
QUANTITIES	BY P. Mak	CHECKED J. Kileby	

STATE OF CALIFORNIA
DEPARTMENT OF TRANSPORTATION

DIVISION OF ENGINEERING SERVICES
STRUCTURE DESIGN
DESIGN BRANCH 12

BRIDGE NO. 54-0364
POST MILE 111.6

AFTON ROAD OC (SEISMIC RETROFIT)
BENT DETAILS NO. 1

STRUCTURES DESIGN DETAIL SHEET (ENGLISH) (REV. 10/25/05)

ORIGINAL SCALE IN INCHES FOR REDUCED PLANS 0 1 2 3

CU 08
EA 0G4801

DISREGARD PRINTS BEARING EARLIER REVISION DATES

REVISION DATES: 08-18-10 09-08-10 09-13-10 09-14-10 10-13-10 10-25-10 11-05-10 11-18-10 12-02-10

SHEET 6 OF 12

FILE => 54-0364-h-bent-dt01.dgn

USERNAME => trsttk DATE PLOTTED => 08-MAR-2011 TIME PLOTTED => 10:11

DIST	COUNTY	ROUTE	POST MILES TOTAL PROJECT	SHEET No	TOTAL SHEETS
08	SBd	15	R111.6,R120.4, R124.2	25	54

REGISTERED CIVIL ENGINEER 12-02-10 DATE

3-7-11
PLANS APPROVAL DATE

REGISTERED PROFESSIONAL ENGINEER Leon Valla No. 45351 Exp. 09-30-12 CIVIL STATE OF CALIFORNIA

The State of California or its officers or agents shall not be responsible for the accuracy or completeness of electronic copies of this plan sheet.

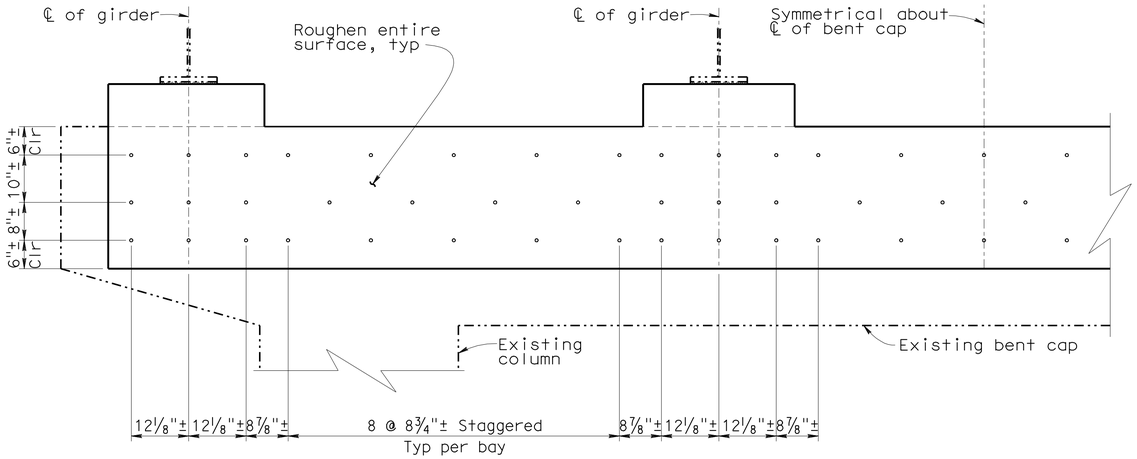

CATCHER BEAM #5 DRILL AND BOND DOWEL ELEVATION AT BENTS 2-4

3/4"=1'-0"

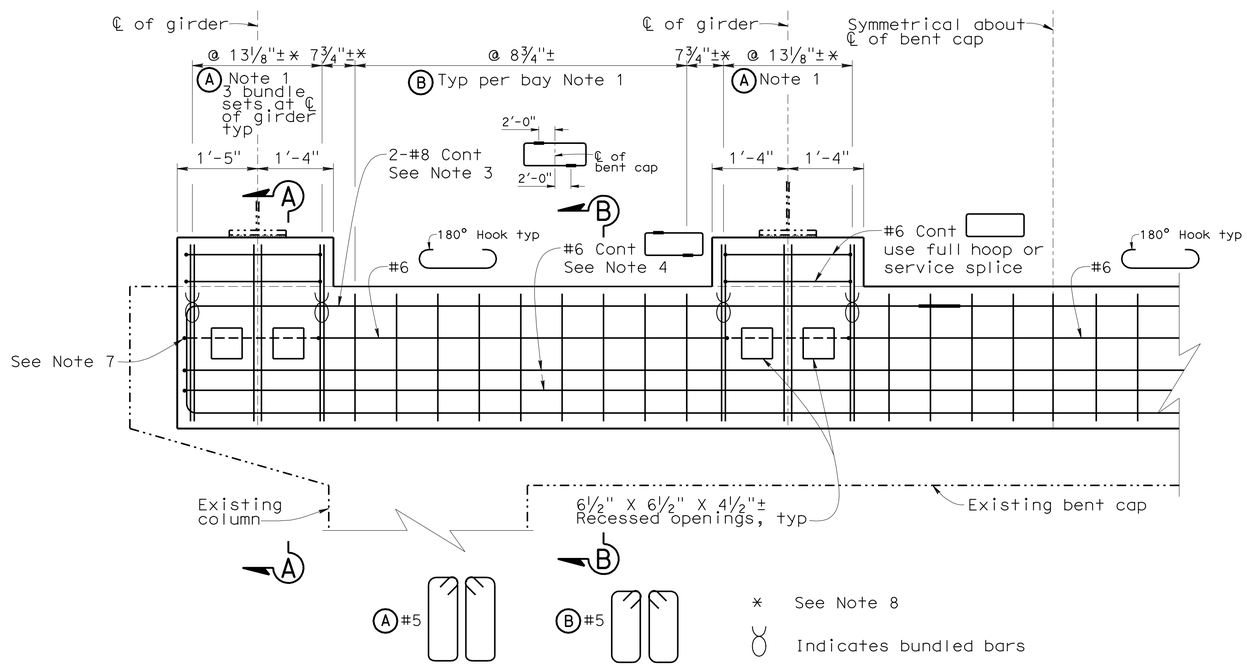

CATCHER BEAM STIRRUP AND MAIN REINFORCEMENT ELEVATION AT BENTS 2-4

3/4"=1'-0"

Not all reinforcement shown for clarity

NOTES:

1. Match all stirrup spacing with #5 drill and bond locations, typ. (Up or down hook, typ)
2. All reinforcing and/or service splicing not shown for clarity.
3. All splicing of #8 cont reinforcement must be done with service splices staggered about ℄ of bent cap.
4. Service splicing of #6 cont reinforcement at same staggered locations as #8 cont.
5. Shear keys and existing bearings not shown for clarity.
6. For "Section A-A" and "Section B-B" see "Bent Details No. 3" sheet.
7. See "Note 4" on "Bent Details No. 3" sheet.
8. Dimensions taken from ℄ of bundled stirrups, typ.
9. All existing longitudinal restrainers must be removed before catcher beams can be constructed.

NOTE:
THE CONTRACTOR SHALL VERIFY ALL CONTROLLING FIELD DIMENSIONS BEFORE ORDERING OR FABRICATING ANY MATERIAL.

	BY	CHECKED
DESIGN	Leon Valla	Paul Mak
DETAILS	Ton Doan	Paul Mak
QUANTITIES	Paul Mak	Jeff Klieby

STATE OF CALIFORNIA
DEPARTMENT OF TRANSPORTATION

DIVISION OF ENGINEERING SERVICES
STRUCTURE DESIGN
DESIGN BRANCH 12

BRIDGE NO. 54-0364
POST MILE 111.6

AFTON ROAD OC (SEISMIC RETROFIT)
BENT DETAILS NO. 2

STRUCTURES DESIGN DETAIL SHEET (ENGLISH) (REV. 10/25/05)

ORIGINAL SCALE IN INCHES FOR REDUCED PLANS 0 1 2 3

CU 08
EA 0G4801

DISREGARD PRINTS BEARING EARLIER REVISION DATES

REVISION DATES: 09-28-10 10-01-10 10-05-10 10-25-10 11-05-10 12-02-10

SHEET 7 OF 12

FILE => 54-0364-h-bent-dt02.dgn

USERNAME => ttrstrk DATE PLOTTED => 08-MAR-2011 TIME PLOTTED => 10:11

DIST	COUNTY	ROUTE	POST MILES TOTAL PROJECT	SHEET No	TOTAL SHEETS
08	SBd	15	R111.6,R120.4, R124.2	26	54

REGISTERED CIVIL ENGINEER 12-02-10 DATE

3-7-11
PLANS APPROVAL DATE

REGISTERED PROFESSIONAL ENGINEER Leon Valla No. 45351 Exp. 09-30-12 CIVIL STATE OF CALIFORNIA

The State of California or its officers or agents shall not be responsible for the accuracy or completeness of electronic copies of this plan sheet.

NOTES:

1. For details not shown see "Continuity Plate Details" sheet.
2. All existing reinforcement including bent cap stirrups to remain undamaged.
3. All washers on 1¼"Ø high strength rods to bearing plates to be 2 inches minimum diameter. All stirrups reinforcement, and drill and bond dowels to be 2" clear from the edge of 6½" X 6½" X 4½"± recess openings except #4 grillage is 1" clr, typ. 1¼"Ø high strength rod connections to be recessed flush with out-side edge of catcher beams, typ.
4. Reinforcement to hook and continue around ends of catcher beams like #6 cont in "Section C-C" on "Bent Details No. 4" sheet. Stop reinforcement 2" clr of 1¼"Ø high strength rod recess openings, typ.
5. For "Section C-C", "Section D-D" and "Section E-E", see "Bent Details No. 4" sheet.
6. Reinforcement is symmectrical around ℄ of existing bent cap.

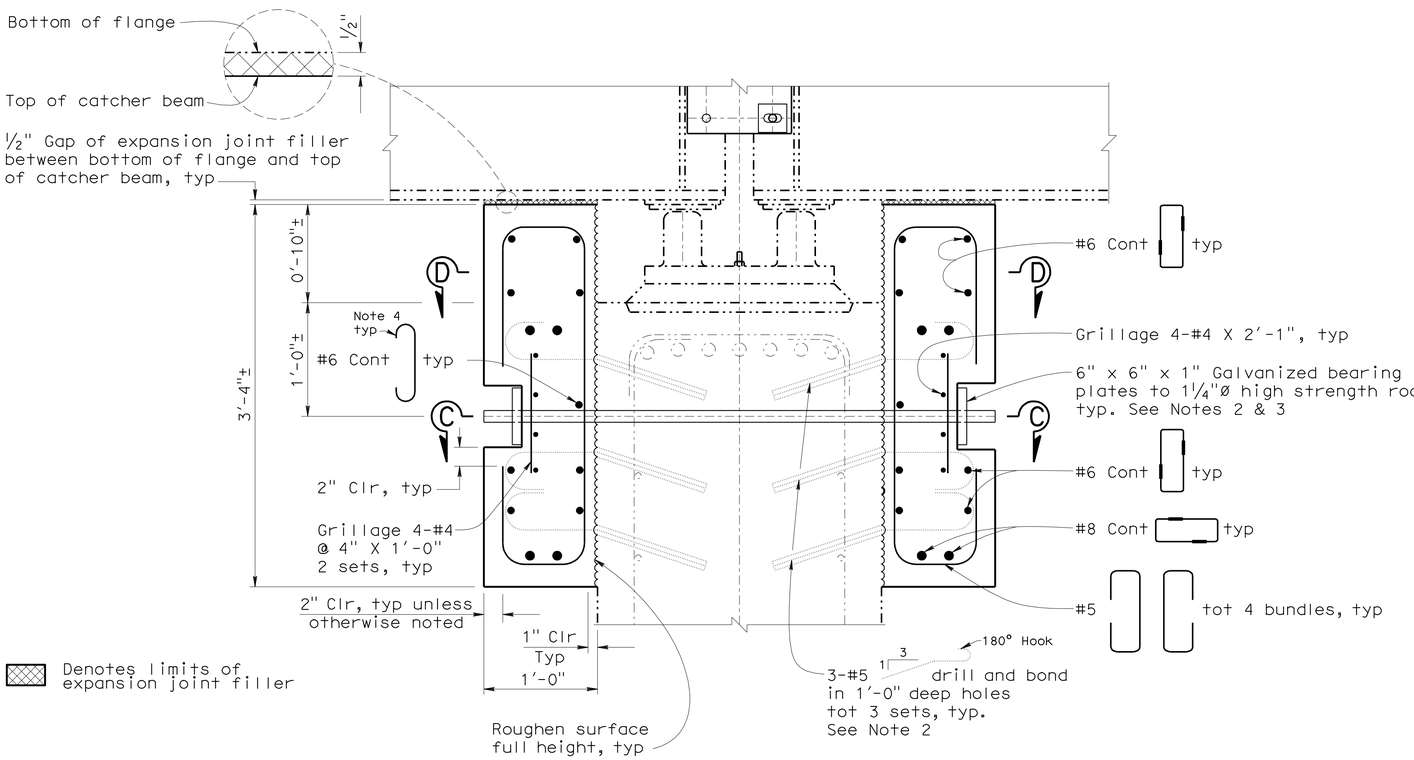

SECTION A-A

1 1/2"=1'-0"

See Note 6

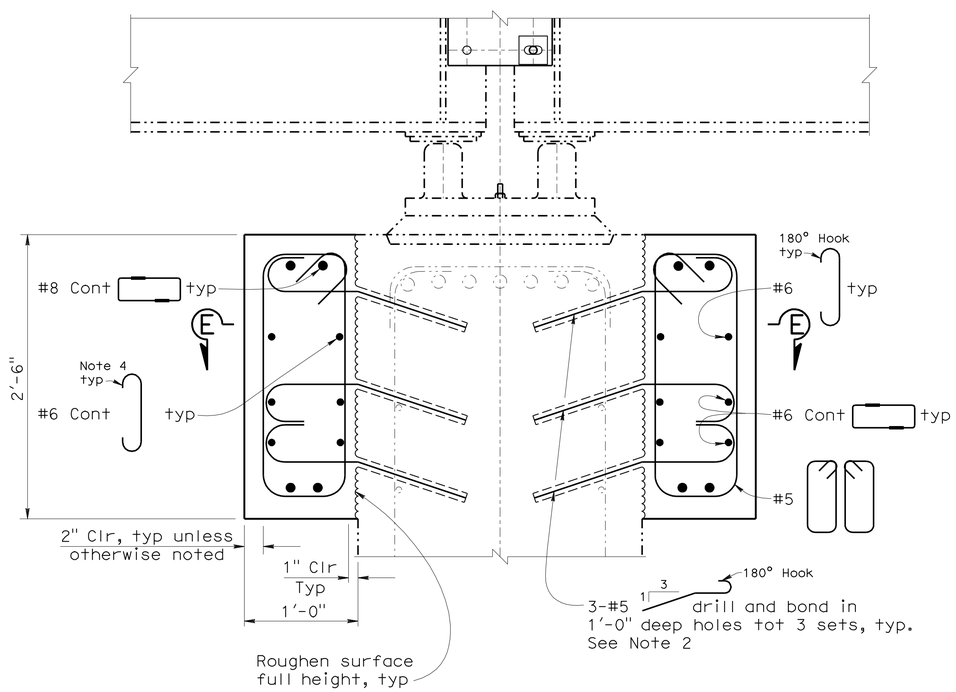

SECTION B-B

1 1/2"=1'-0"

See Note 6

NOTE:
THE CONTRACTOR SHALL VERIFY ALL CONTROLLING FIELD DIMENSIONS BEFORE ORDERING OR FABRICATING ANY MATERIAL.

	BY	CHECKED
DESIGN	Leon Valla	Paul Mak
DETAILS	Ton Doan	Paul Mak
QUANTITIES	Paul Mak	Jeff Klieby

STATE OF CALIFORNIA DEPARTMENT OF TRANSPORTATION

DIVISION OF ENGINEERING SERVICES STRUCTURE DESIGN DESIGN BRANCH 12

BRIDGE NO. 54-0364
POST MILE 111.6

AFTON ROAD OC (SEISMIC RETROFIT)
BENT DETAILS NO. 3

STRUCTURES DESIGN DETAIL SHEET (ENGLISH) (REV. 10/25/05)

ORIGINAL SCALE IN INCHES FOR REDUCED PLANS 0 1 2 3

CU 08
EA 0G4801

DISREGARD PRINTS BEARING EARLIER REVISION DATES

REVISION DATES: 10-05-10 10-28-10 11-05-10 12-02-10

SHEET 8 OF 12

FILE => 54-0364-h-bent-dt03.dgn

USERNAME => trsitrk DATE PLOTTED => 08-MAR-2011 TIME PLOTTED => 10:11

DIST	COUNTY	ROUTE	POST MILES TOTAL PROJECT	SHEET No	TOTAL SHEETS
08	SBd	15	R111.6,R120.4, R124.2	27	54

Leon Valla 12-02-10
REGISTERED CIVIL ENGINEER DATE

3-7-11
PLANS APPROVAL DATE

REGISTERED PROFESSIONAL ENGINEER Leon Valla No. 45351 Exp. 09-30-12 CIVIL STATE OF CALIFORNIA

The State of California or its officers or agents shall not be responsible for the accuracy or completeness of electronic copies of this plan sheet.

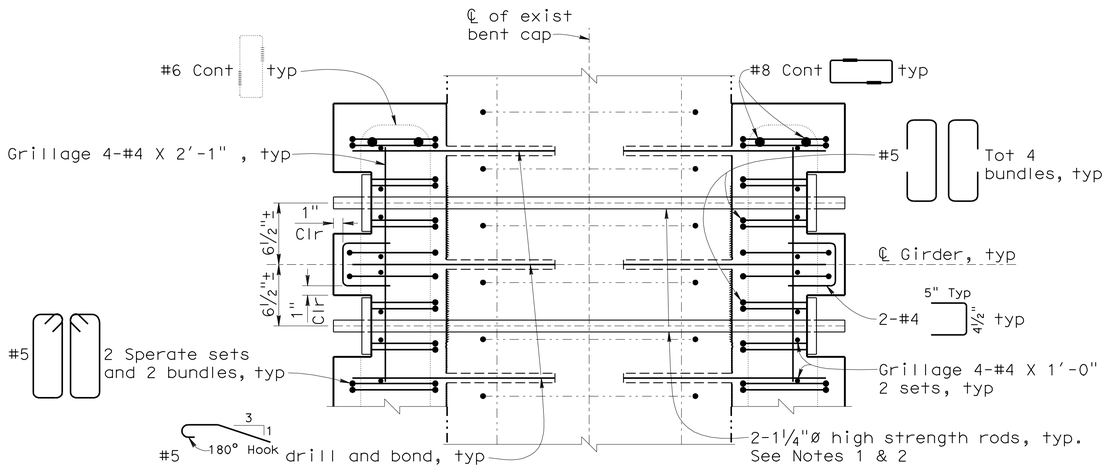

SECTION C-C

1 1/2"=1'-0"

At ℄ of 6½" X 6½" recess opening

See Note 3

NOTES:

1. All existing reinforcement including bent cap stirrups to remain undamaged.
2. All 1¼"ø high strength rods to be tightened to an ultimate load of 80 kips. Core in 1½"ø holes and pressure grout, typ.
3. Reinforcement is symmectrical around ℄ of existing bent cap.
4. See "Note 4" on "Bent Details No. 3" sheet.

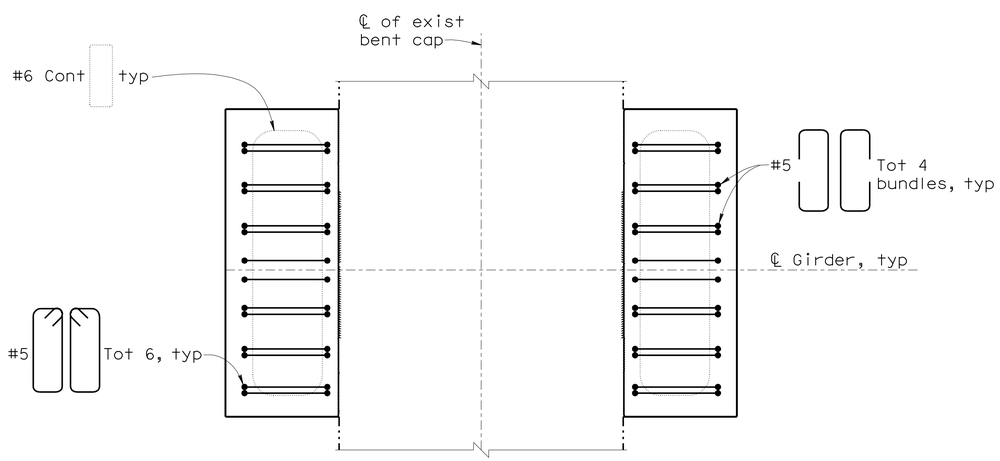

SECTION D-D

1 1/2"=1'-0"

Above top of existing bent cap

See Note 3

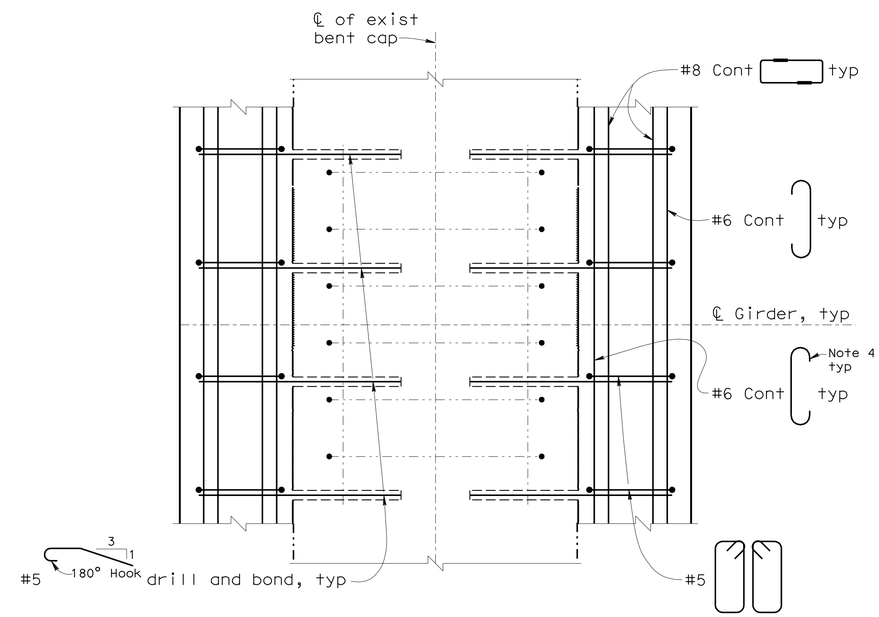

SECTION E-E

1 1/2"=1'-0"

See Note 3

NOTE:
THE CONTRACTOR SHALL VERIFY ALL CONTROLLING FIELD DIMENSIONS BEFORE ORDERING OR FABRICATING ANY MATERIAL.

	BY	CHECKED
DESIGN	Leon Valla	Paul Mak
DETAILS	Ton Doan	Paul Mak
QUANTITIES	Paul Mak	Jeff Klieby

STATE OF CALIFORNIA
DEPARTMENT OF TRANSPORTATION

DIVISION OF ENGINEERING SERVICES
STRUCTURE DESIGN
DESIGN BRANCH 12

BRIDGE NO. 54-0364
POST MILE 111.6

AFTON ROAD OC (SEISMIC RETROFIT)
BENT DETAILS NO. 4

STRUCTURES DESIGN DETAIL SHEET (ENGLISH) (REV. 10/25/05)

ORIGINAL SCALE IN INCHES FOR REDUCED PLANS 0 1 2 3

CU 08
EA 0G4801

DISREGARD PRINTS BEARING EARLIER REVISION DATES

REVISION DATES: 10-08-10 10-28-10 12-02-10

SHEET 9 OF 12

FILE => 54-0364-h-bent-dt04.dgn

USERNAME => trstrk DATE PLOTTED => 08-MAR-2011 TIME PLOTTED => 10:11

DIST.	COUNTY	ROUTE	KILOMETER POST TOTAL PROJECT	SHEET NO.	TOTAL SHEETS
08	SBd	15	R111.6,R120.4, R124.2	28	54

REGISTERED ENGINEER - CIVIL 12-02-10

REGISTERED PROFESSIONAL ENGINEER Leon Valla No. 45351 Exp. 09-30-12 CIVIL STATE OF CALIFORNIA

3-7-11
PLANS APPROVAL DATE

The State of California or its officers or agents shall not be responsible for the accuracy or completeness of electronic copies of this plan sheet.

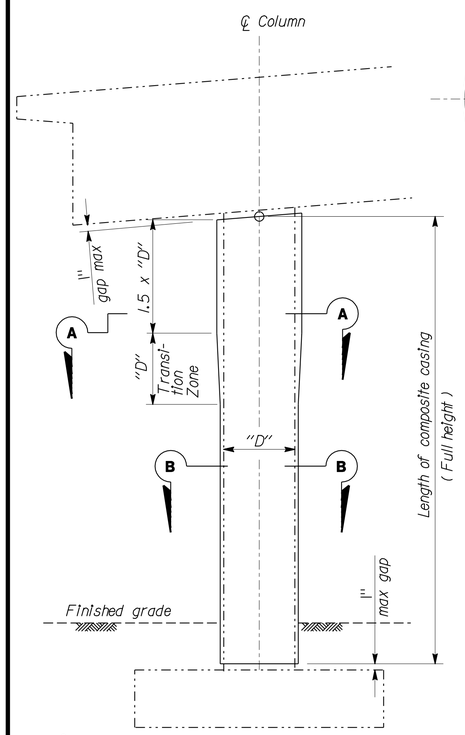

2 COLUMN RETROFIT

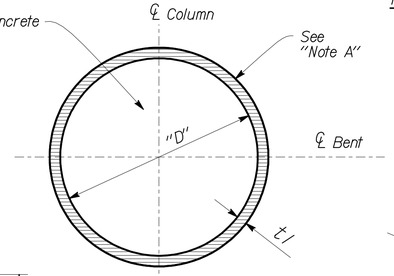

SECTION A-A

Note A:
Epoxy Resin-Carbon Composite

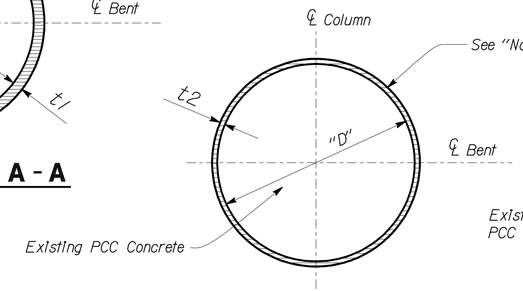

SECTION B-B

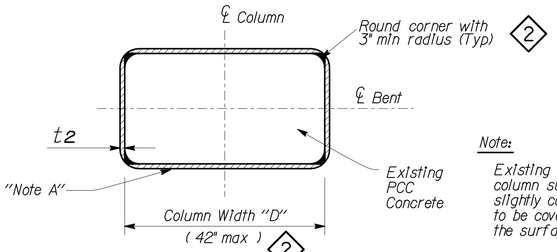

2 **SECTION B-B**

Note:
Existing rectangular column concrete column surfaces shall be straight or slightly convex outward at all areas to be covered by jackets; otherwise, the surface shall be filled with epoxy.

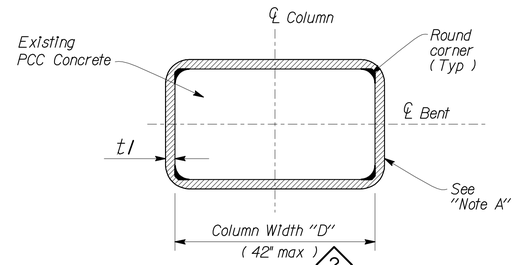

2 **SECTION A-A**

LEGEND

-·-·-·-·-	Indicates Existing Structure
———	Indicates New Construction
t1, t2	Denotes Minimum Thickness of Accumulated Dry E-Glass Wraps or completed Carbon Jacket thickness (excluding coatings)

1 **SYSTEM 1**
FIBER VOLUME = 35% min

E-GLASS		
COLUMN DIA	t1 (min)	t2 (min)
305	5	2.5
610	10	5
914	15	7
1219 max	20	10

E-GLASS RECTANGULAR COLUMN		
COLUMN WIDTH	t1 (min)	t2 (min)
305	7.6	3.8
610	15	7.6
914 max	22	11

2 **SYSTEM 2**
FIBER VOLUME = 50% min

CARBON ROUND COLUMN		
COLUMN DIA	t1 (min)	t2 (min)
12"	0.05"	0.05"
24"	0.08"	0.05"
36"	0.12"	0.06"
48 max	0.16"	0.08"

CARBON RECTANGULAR COLUMN		
COLUMN WIDTH	t1 (min)	t2 (min)
12"	0.06"	0.05"
24"	0.12"	0.06"
42" max	0.18"	0.09"

E-Glass Notes: 1

1. Each composite section shall be wrapped using continuous E-glass fabric not less than 610 mm in height. All wraps of continuous E-glass weave shall be terminated a minimum of 305 mm past the starting point of the initial wrap. Subsequent wraps shall be started (butted) at the ending point of the last wrap.
2. All cut edges shall be sealed with epoxy.

Carbon Notes: 2

1. Pre-preg carbon jacket shall be completely cured by elevated temperature.
2. Pre-preg carbon fiber spools shall contain continuous strands not less than 100 ft in length.

General Notes:

1. For hexagonal or octagonal columns use composite thickness specified in "Rectangular Column" table.
2. Remove any sharp corners to 1½" radius minimum.
3. All materials shall be protected from moisture.
4. Drainage opening reinforcement shall be of the same material used for the column casing
5. The casing thickness shall taper evenly the full length of the transition zone.
6. The composite casing shall adhere firmly to all surfaces of the existing column.

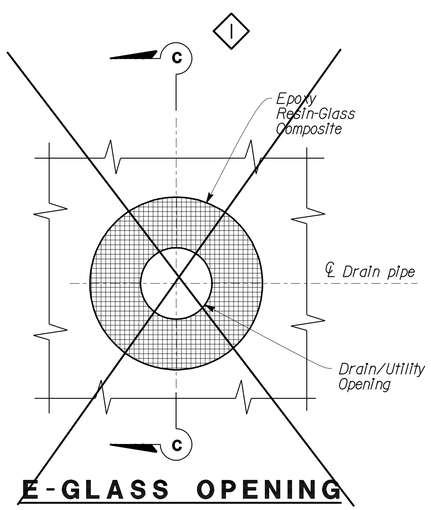

E-GLASS OPENING

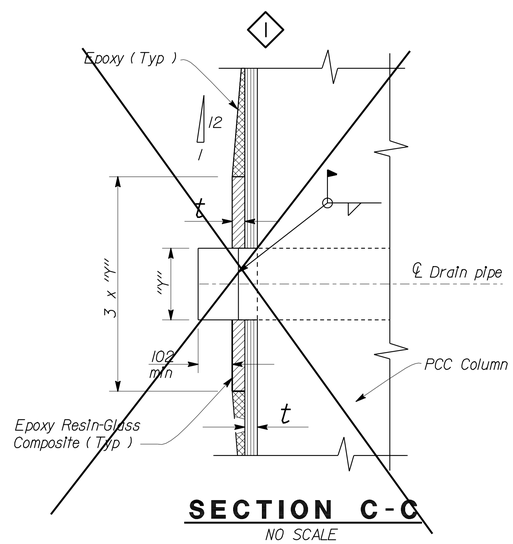

SECTION C-C

NO SCALE

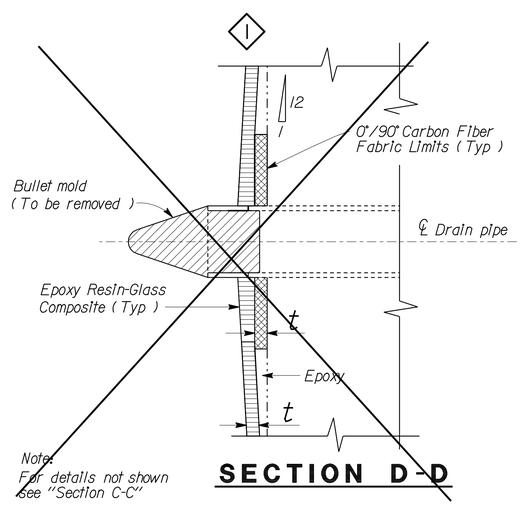

Note:
For details not shown See "Section C-C"

SECTION D-D

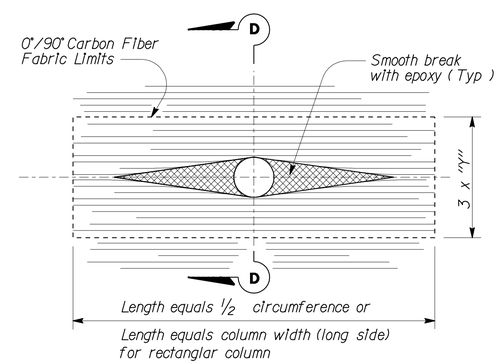

CARBON OPENING

NO SCALE
ALL DIMENSIONS ARE IN INCHES UNLESS OTHERWISE SHOWN

STANDARD DRAWING

RELEASE DATE	REVISED	DESIGN	BY PAT HIPLEY	CHECKED RAY ZELINSKI	RELEASED BY
FILE NO.	xs7-210	DETAILS	BY R. YEE	CHECKED PAT HIPLEY	
		SUBMITTED	BY RAY ZELINSKI	DRAWING DATE 4/96	OFFICE CHIEF

DS OSD 2147A (CADD 8/95)

1 Delete notes and details
2 Revise details

STATE OF CALIFORNIA
DEPARTMENT OF TRANSPORTATION

DIVISION OF ENGINEERING SERVICES

CU: 08
EA: 0G480I

BRIDGE NO. 54-0364
POST MILE 111.6

AFTON ROAD OC (SEISMIC RETROFIT)
COMPOSITE COLUMN CASING

DISREGARD PRINTS BEARING EARLIER REVISION DATES → 07-06-10 10-13-10 12-02-10

REVISION DATES (PRELIMINARY STAGE ONLY)

SHEET 10 OF 12

USERNAME => trstrk

54-0364-j-ccdt01.d

DATE PLOTTED => 08-MAR-2011 TIME PLOTTED => 10:11

DIST	COUNTY	ROUTE	POST MILES TOTAL PROJECT	SHEET No	TOTAL SHEETS
08	SBd	15	R111.6,R120.4, R124.2	29	54

REGISTERED CIVIL ENGINEER 12-02-10 DATE

3-7-11
PLANS APPROVAL DATE

REGISTERED PROFESSIONAL ENGINEER Leon Valla No. 45351 Exp. 09-30-12 CIVIL STATE OF CALIFORNIA

The State of California or its officers or agents shall not be responsible for the accuracy or completeness of electronic copies of this plan sheet.

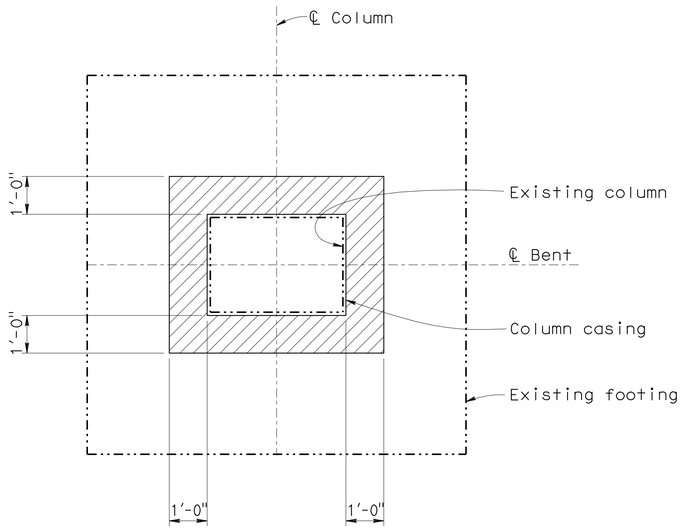

PLAN
1/2"=1'-0"

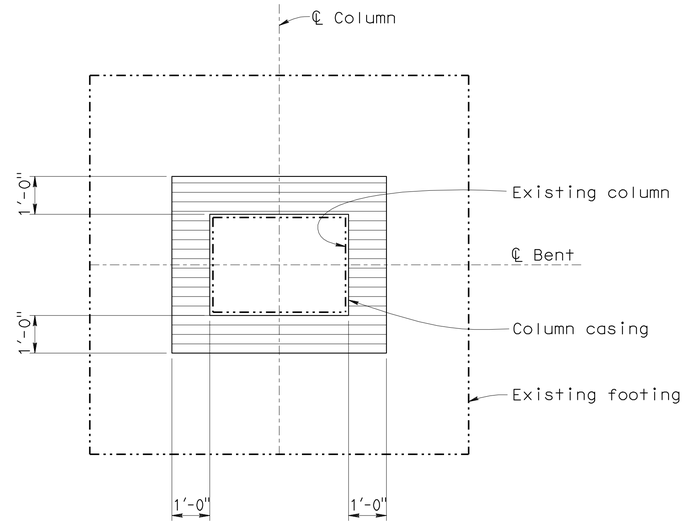

PLAN
1/2"=1'-0"

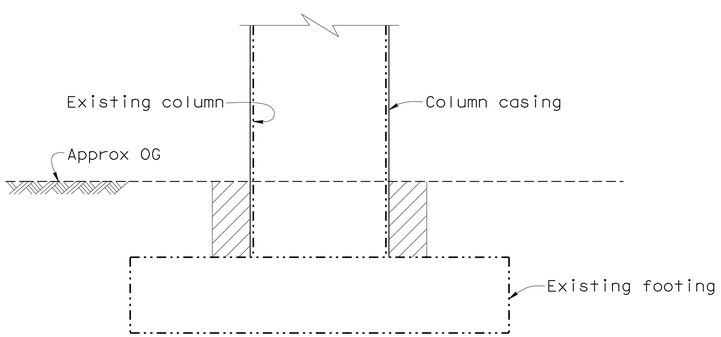

ELEVATION
1/2"=1'-0"

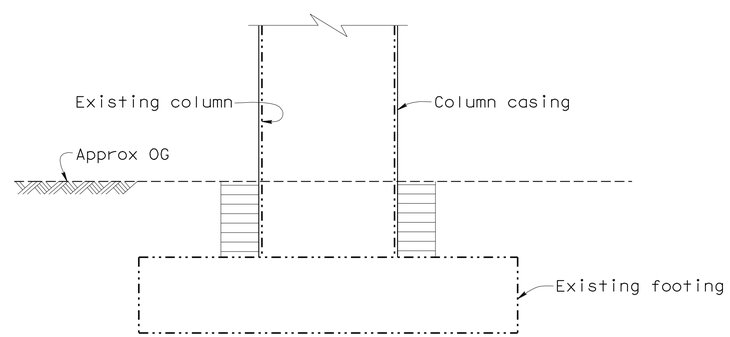

ELEVATION
1/2"=1'-0"

Legend:

Indicates limits of structure excavation (Bridge)

Indicates limits of structure back-fill (Bridge)

NOTE:
THE CONTRACTOR SHALL VERIFY ALL CONTROLLING FIELD DIMENSIONS BEFORE ORDERING OR FABRICATING ANY MATERIAL.

	BY	CHECKED
DESIGN	Leon Valla	Paul Mak
DETAILS	Ton Doan	Leon Valla/Paul Mak
QUANTITIES	P. Mak	J. Klieby

STATE OF CALIFORNIA
DEPARTMENT OF TRANSPORTATION

DIVISION OF ENGINEERING SERVICES
STRUCTURE DESIGN
DESIGN BRANCH 12

BRIDGE NO. 54-0364
POST MILE 111.6

AFTON ROAD OC (SEISMIC RETROFIT)
COMPOSITE COLUMN CASING DETAILS

STRUCTURES DESIGN DETAIL SHEET (ENGLISH) (REV. 10/25/05)

ORIGINAL SCALE IN INCHES FOR REDUCED PLANS 0 1 2 3

CU 08
EA 0G4801

DISREGARD PRINTS BEARING EARLIER REVISION DATES

REVISION DATES: ~~06-30-10~~ ~~10-13-10~~ 12-02-10

SHEET 11 OF 12

FILE => 54-0364-j-ccdt02.dgn

USERNAME => trstrk DATE PLOTTED => 08-MAR-2011 TIME PLOTTED => 10:12

DIST	COUNTY	ROUTE	POST MILES TOTAL PROJECT	SHEET No	TOTAL SHEETS
08	SBd	15	R111.6,R120.4, R124.2	30	54

REGISTERED CIVIL ENGINEER 12-02-10 DATE

3-7-11
PLANS APPROVAL DATE

REGISTERED PROFESSIONAL ENGINEER Leon Valla No. 45351 Exp. 09-30-12 CIVIL STATE OF CALIFORNIA

The State of California or its officers or agents shall not be responsible for the accuracy or completeness of electronic copies of this plan sheet.

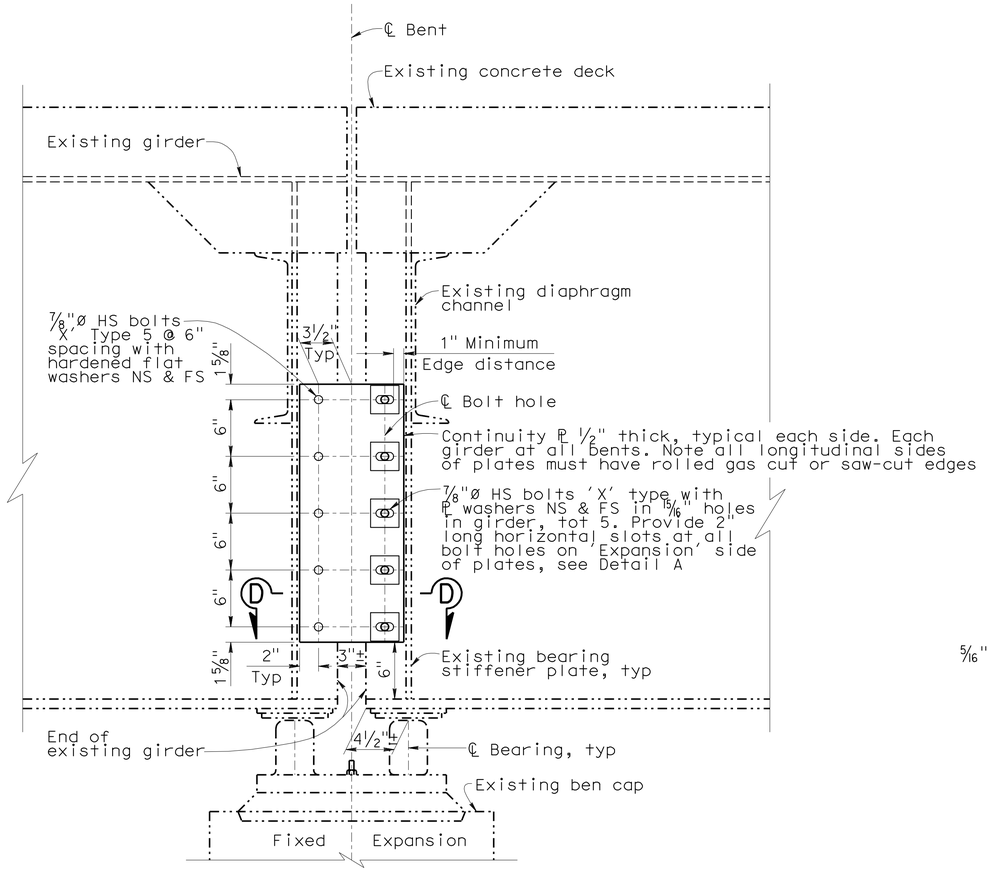

ELEVATION VIEW

1-1/2"=1'-0"

Notes 1 & 2

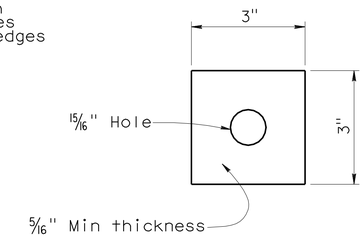

PLATE WASHER DETAIL

6"=1'-0"

NOTES:

1. All continuity plates must be installed first before existing longitudinal restrainers are removed.
2. Galvanize all parts after fabrication.

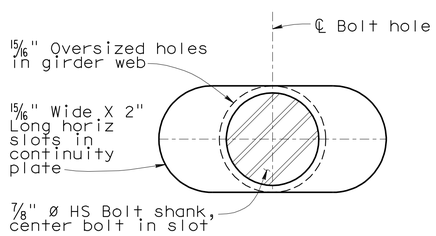

DETAIL A

NO SCALE

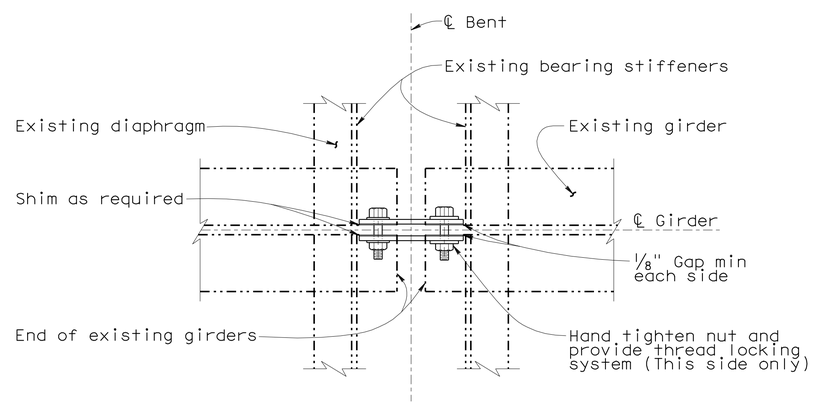

SECTION D-D

1-1/2"=1'-0"

NOTE:
THE CONTRACTOR SHALL VERIFY ALL CONTROLLING FIELD DIMENSIONS BEFORE ORDERING OR FABRICATING ANY MATERIAL.

	BY	CHECKED
DESIGN	Leon Valla	Paul Mak
DETAILS	Ton Doan	Leon Valla/Paul Mak
QUANTITIES	P. Mak	J. Klieby

STATE OF CALIFORNIA
DEPARTMENT OF TRANSPORTATION

DIVISION OF ENGINEERING SERVICES
STRUCTURE DESIGN
DESIGN BRANCH 12

BRIDGE NO. 54-0364
POST MILE 111.6

AFTON ROAD OC (SEISMIC RETROFIT)
CONTINUITY PLATE DETAILS

STRUCTURES DESIGN DETAIL SHEET (ENGLISH) (REV. 10/25/05)

ORIGINAL SCALE IN INCHES FOR REDUCED PLANS 0 1 2 3

CU 08
EA 0G4801

DISREGARD PRINTS BEARING EARLIER REVISION DATES

REVISION DATES: 06-25-10 06-28-10 08-24-10 10-13-10 11-05-10 11-10-10 12-02-10

SHEET 12 OF 12

FILE => 54-0364-u-miscdt01.dgn

USERNAME => frsttk DATE PLOTTED => 08-MAR-2011 TIME PLOTTED => 10:12

DIST	COUNTY	ROUTE	POST MILES TOTAL PROJECT	SHEET No	TOTAL SHEETS
08	SBd	15	R111.6,R120.4, R124.2	31	54

REGISTERED CIVIL ENGINEER 12-02-10 DATE

3-7-11
PLANS APPROVAL DATE

The State of California or its officers or agents shall not be responsible for the accuracy or completeness of electronic copies of this plan sheet.

REGISTERED PROFESSIONAL ENGINEER Leon Valla No. 45351 Exp. 09-30-12 CIVIL STATE OF CALIFORNIA

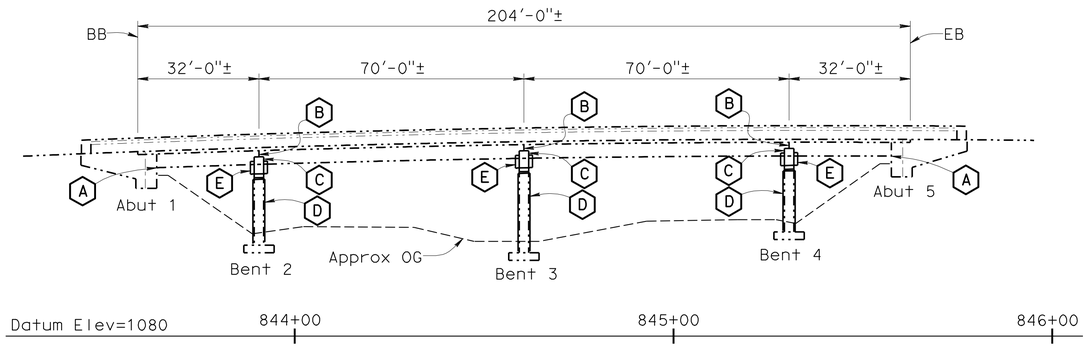

ELEVATION
1"=20'-0"

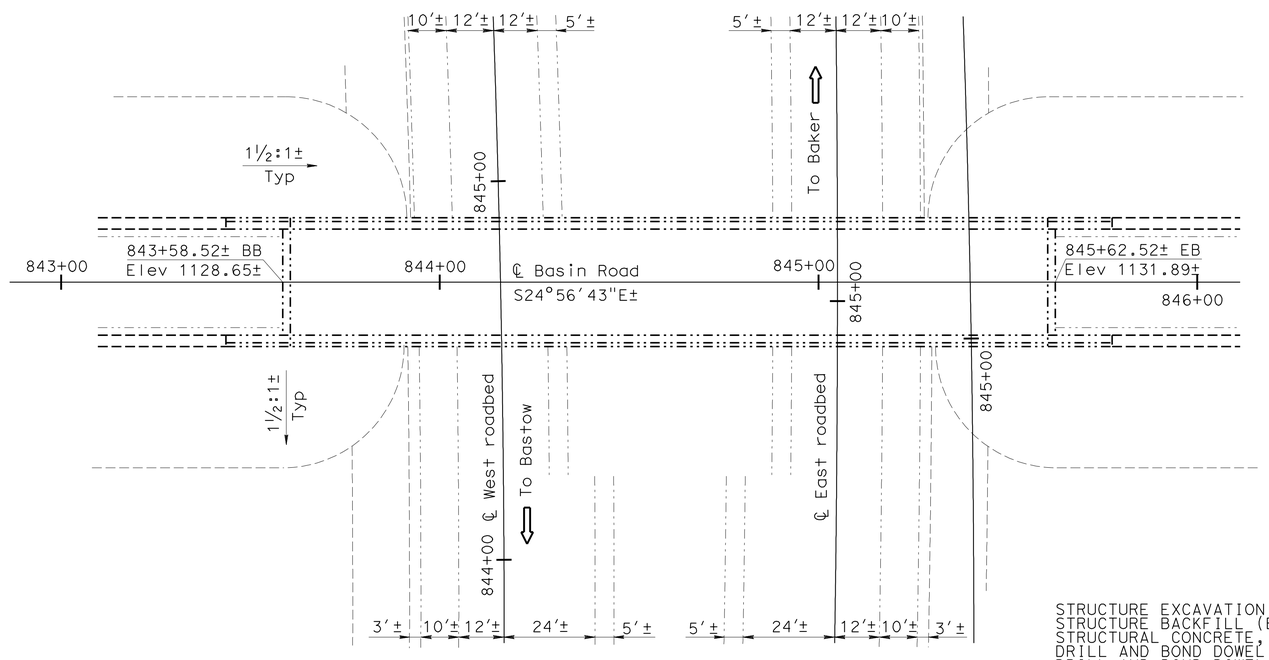

PLAN
1"=20'-0"

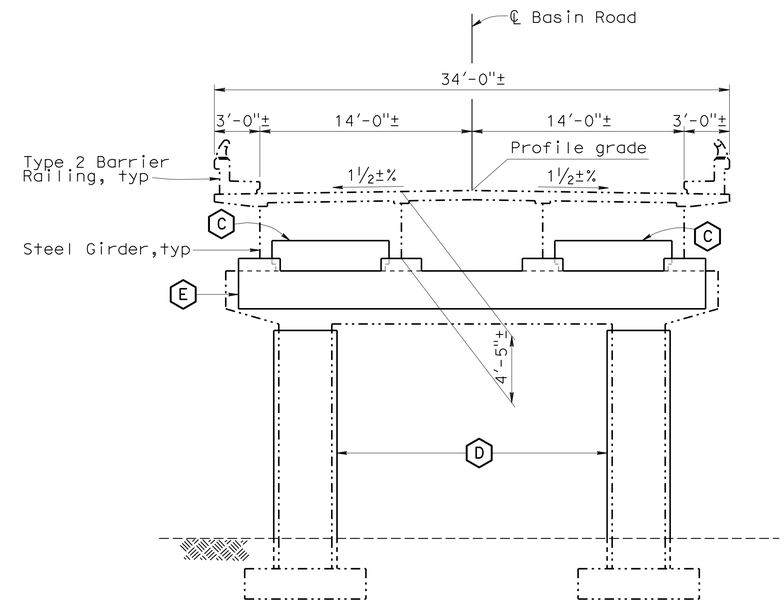

TYPICAL SECTION
1"=5'-0"

Legend:

- Indicates existing structure
- (A) Abutment Retrofit consisting of Bolsters, Shear Keys and Catcher Blocks
- (B) Continuity Plates
- (C) Transverse Shear Keys
- (D) Composite Column Casings
- (E) Catcher Beams each side ℄ of Bents (typ)

For Index To Plans, see "Index To plans" sheet

NOTE:
THE CONTRACTOR SHALL VERIFY ALL CONTROLLING FIELD DIMENSIONS BEFORE ORDERING OR FABRICATING ANY MATERIAL.

QUANTITIES

STRUCTURE EXCAVATION (BRIDGE)	7	CY
STRUCTURE BACKFILL (BRIDGE)	7	CY
STRUCTURAL CONCRETE, BRIDGE	52	CY
DRILL AND BOND DOWEL	955	LF
DRILL AND BOND DOWEL (CHEMICAL ADHESIVE)	112	EA
CORE AND PRESSURE GROUT DOWELS	60	LF
BAR REINFORCING STEEL (BRIDGE)	16,780	LB
COMPOSITE COLUMN CASING	1,125	SQFT
MISCELLANEOUS METAL (BRIDGE)	4,176	LB

Matt Holm
DESIGN ENGINEER

	BY	CHECKED			
DESIGN	Jeff Klieby	Leon Valla	LOAD & RESISTANCE FACTOR DESIGN	LIVE LOADING: HL93 W/"LOW-BOY"; PERMIT DESIGN VEHICLE	
DETAILS	Ton Doan	Leon Valla	LAYOUT	Ton Doan	Jeff Klieby
QUANTITIES	Paul Mak	Jeff Klieby	SPECIFICATIONS	X	Jennifer Ramirez

STATE OF CALIFORNIA
DEPARTMENT OF TRANSPORTATION

DIVISION OF ENGINEERING SERVICES
STRUCTURE DESIGN
DESIGN BRANCH 12

BRIDGE NO. 54-0383
POST MILE R120.4

BASIN ROAD OC (SEISMIC RETROFIT)
GENERAL PLAN

ORIGINAL SCALE IN INCHES FOR REDUCED PLANS 0 1 2 3

CU 08
EA 0G4801

DISREGARD PRINTS BEARING EARLIER REVISION DATES

REVISION DATES: 12-15-10 | 07-27-10 | 08-12-10 | 08-26-10 | 10-07-10 | 10-26-10 | 11-08-10 | 11-30-10 | 12-02-10

SHEET 1 OF 12

USERNAME => trestrk DATE PLOTTED => 08-MAR-2011 TIME PLOTTED => 11:17

STRUCTURES DESIGN GENERAL PLAN SHEET (ENGLISH) (REV.07-24-06)

FILE => 54-0383-a-gp.dgn

DIST	COUNTY	ROUTE	POST MILES TOTAL PROJECT	SHEET No	TOTAL SHEETS
08	SBd	15	R111.6,R120.4, R124.2	32	54

REGISTERED CIVIL ENGINEER 12-02-10 DATE

3-7-11
PLANS APPROVAL DATE

REGISTERED PROFESSIONAL ENGINEER Leon Valla No. 45351 Exp. 09-30-12 CIVIL STATE OF CALIFORNIA

The State of California or its officers or agents shall not be responsible for the accuracy or completeness of electronic copies of this plan sheet.

INDEX TO PLANS

SHEET NO.	TITLE
1	GENERAL PLAN
2	INDEX TO PLANS
3	ABUTMENT DETAILS NO. 1
4	ABUTMENT DETAILS NO. 2
5	ABUTMENT DETAILS NO. 3
6	BENT DETAILS NO. 1
7	BENT DETAILS NO. 2
8	BENT DETAILS NO. 3
9	BENT DETAILS NO. 4
10	COMPOSITE COLUMN CASING
11	COMPOSITE COLUMN CASING DETAILS
12	CONTINUITY PLATE DETAILS

STANDARD PLANS DATED MAY 2006

A10A	ACRONYMS AND ABBREVIATIONS (SHEET 1 OF 2)
A10B	ACRONYMS AND ABBREVIATIONS (SHEET 2 OF 2)
BO-1	BRIDGE DETAILS
BO-3	BRIDGE DETAILS

STANDARD PLAN SHEET NO.

DETAIL NO.

GENERAL NOTES
LOAD AND RESISTANCE FACTOR DESIGN

DESIGN: AASHTO LRFD Bridge Design Specifications, 4th Edition with California Amendments.

SEISMIC DESIGN: Caltrans Seismic Design Criteria (SDC) Version 1.4 June 2006

SEISMIC LOADING: See "SITE SPECIFIC ARS CURVE"

REINFORCED CONCRETE:
f_y = 60 ksi
f'_c = 4.0 ksi unless otherwise noted
f'_c = 5.0 ksi for all Catcher Beams only

STEEL BARS AND PLATE:
$f_{y_{min}}$ = 55 ksi for all plates 1" thick and less
$f_{y_{min}}$ = 50 ksi for all plates greater than 1" thick

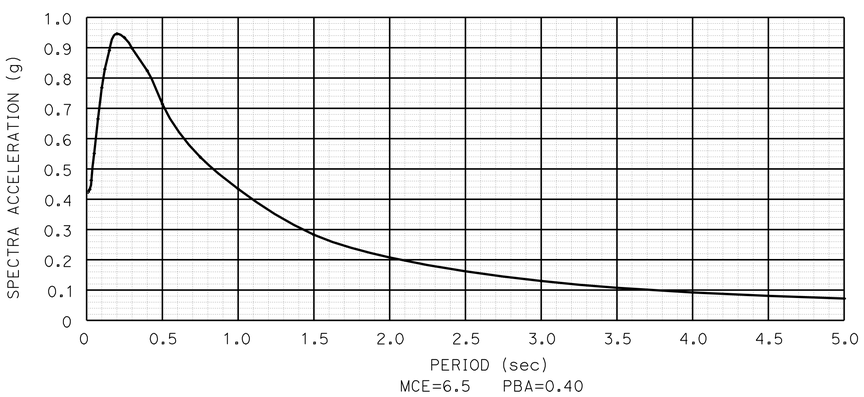

ACCELERATION RESPONSE SPECTRA (WITH 5% DAMPING)

SITE SPECIFIC ARS CURVE

No Scale

	BY	CHECKED
DESIGN	L. Valla	P. Mak
DETAILS	F. Mendoza	L. Valla
QUANTITIES	P. Mak	J. Klieby

STATE OF CALIFORNIA
DEPARTMENT OF TRANSPORTATION

DIVISION OF ENGINEERING SERVICES
STRUCTURE DESIGN
DESIGN BRANCH 12

BRIDGE NO. 54-0383
POST MILE R120.4

BASIN ROAD OC (SEISMIC RETROFIT)
INDEX TO PLANS

STRUCTURES DESIGN DETAIL SHEET (ENGLISH) (REV. 10/25/05)

ORIGINAL SCALE IN INCHES FOR REDUCED PLANS 0 1 2 3

CU 08
EA 0G4801

DISREGARD PRINTS BEARING EARLIER REVISION DATES

REVISION DATES: ~~10-12-10~~ 12-02-10

SHEET 2 OF 12

FILE => 54-0383-a-itp.dgn

USERNAME => trstrk DATE PLOTTED => 08-MAR-2011 TIME PLOTTED => 11:17

DIST	COUNTY	ROUTE	POST MILES TOTAL PROJECT	SHEET No	TOTAL SHEETS
08	SBd	15	R111.6,R120.4, R124.2	33	54

REGISTERED CIVIL ENGINEER 12-02-10 DATE

3-7-11
PLANS APPROVAL DATE

The State of California or its officers or agents shall not be responsible for the accuracy or completeness of electronic copies of this plan sheet.

REGISTERED PROFESSIONAL ENGINEER Leon Valla No. 45351 Exp. 09-30-12 CIVIL STATE OF CALIFORNIA

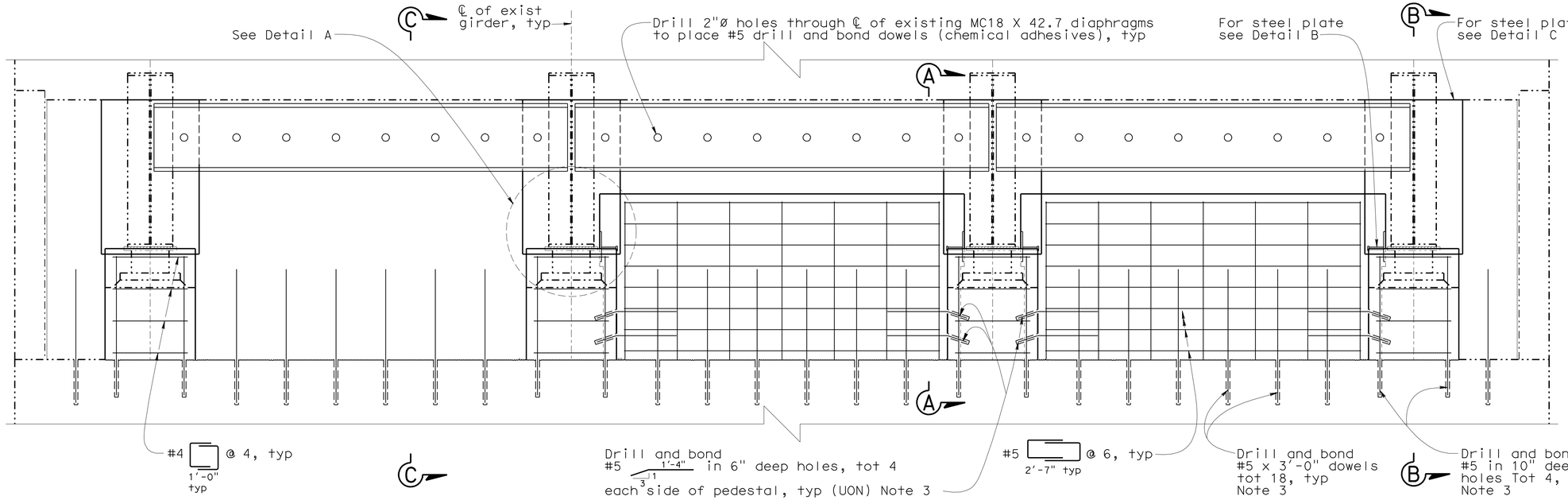

ELEVATION

3/4"=1'-0"

Note 1 & 2

NOTES:

1. Abutment 1 shown, abutment 5 similar.
2. All new and existing reinforcement not shown for clarity.
3. All existing reinforcement must be left undamaged.
4. For "Section A-A", "Section B-B" and "Section C-C", see "Abutment Details No. 2" sheet.
5. For "Detail A", "Detail B", "Detail C" and "Detail D", see "Abutment Details No. 3" sheet.

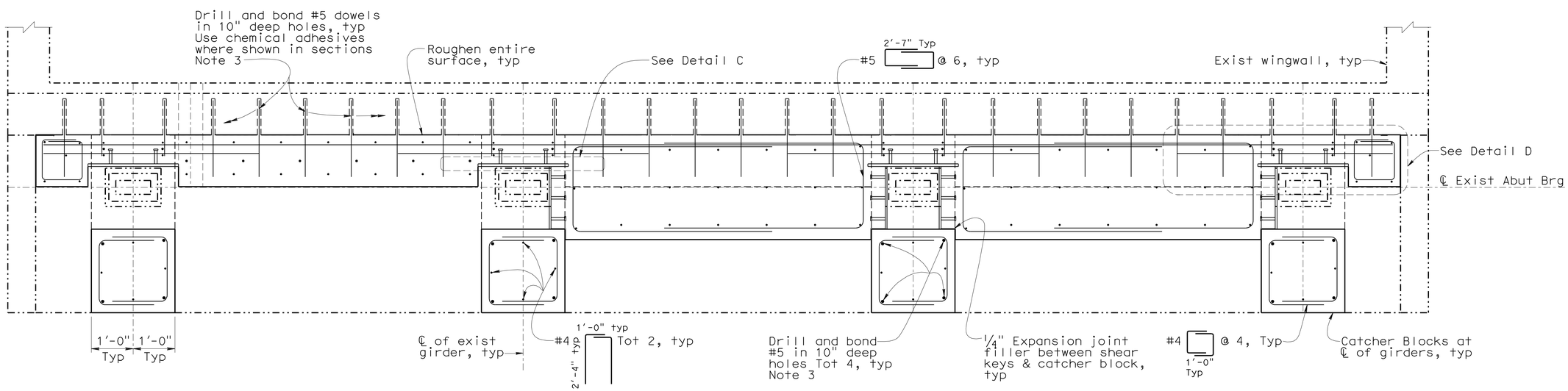

PLAN

3/4"=1'-0"

Note 1 & 2

NOTE:
THE CONTRACTOR SHALL VERIFY ALL CONTROLLING FIELD DIMENSIONS BEFORE ORDERING OR FABRICATING ANY MATERIAL.

	BY	CHECKED
DESIGN	Paul Mak	Leon Valla
DETAILS	Ton Doan	Leon Valla/Paul Mak
QUANTITIES	Paul Mak	Jeff Klieby

STATE OF CALIFORNIA
DEPARTMENT OF TRANSPORTATION

DIVISION OF ENGINEERING SERVICES
STRUCTURE DESIGN
DESIGN BRANCH 12

BRIDGE NO. 54-0383
POST MILE R120.4

BASIN ROAD OC (SEISMIC RETROFIT)
ABUTMENT DETAILS NO. 1

STRUCTURES DESIGN DETAIL SHEET (ENGLISH) (REV. 10/25/05)

ORIGINAL SCALE IN INCHES FOR REDUCED PLANS 0 1 2 3

CU 08
EA 0G4801

DISREGARD PRINTS BEARING EARLIER REVISION DATES

REVISION DATES: 08-26-10 09-09-10 09-13-10 10-07-10 10-14-10 10-18-10 10-26-10 11-08-10 11-18-10 12-02-10

SHEET 3 OF 12

FILE => 54-0383-f-abut-dt01.dgn

USERNAME => trstrk DATE PLOTTED => 08-MAR-2011 TIME PLOTTED => 11:17

DIST	COUNTY	ROUTE	POST MILES TOTAL PROJECT	SHEET No	TOTAL SHEETS
08	SBd	15	R111.6,R120.4, R124.2	34	54

REGISTERED CIVIL ENGINEER 12-02-10 DATE

3-7-11
PLANS APPROVAL DATE

REGISTERED PROFESSIONAL ENGINEER Leon Valla No. 45351 Exp. 09-30-12 CIVIL STATE OF CALIFORNIA

The State of California or its officers or agents shall not be responsible for the accuracy or completeness of electronic copies of this plan sheet.

NOTES:

1. All existing reinforcement must be left undamaged.
2. Not all existing reinforcement shown for clarity.

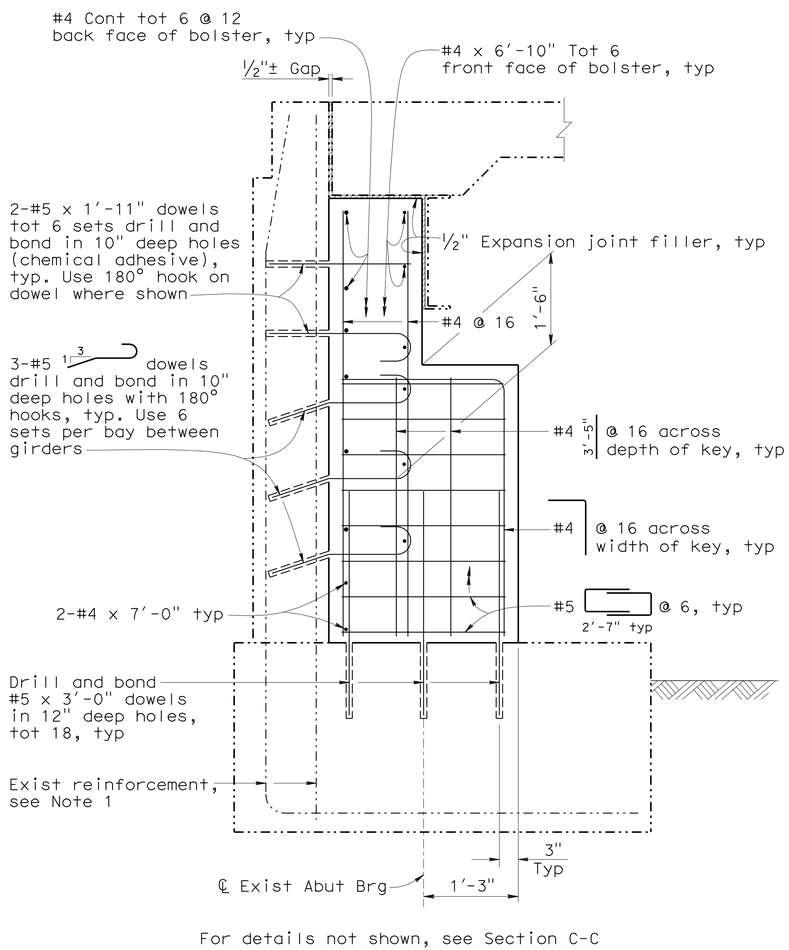

For details not shown, see Section C-C

SECTION A-A

1"=1'-0"

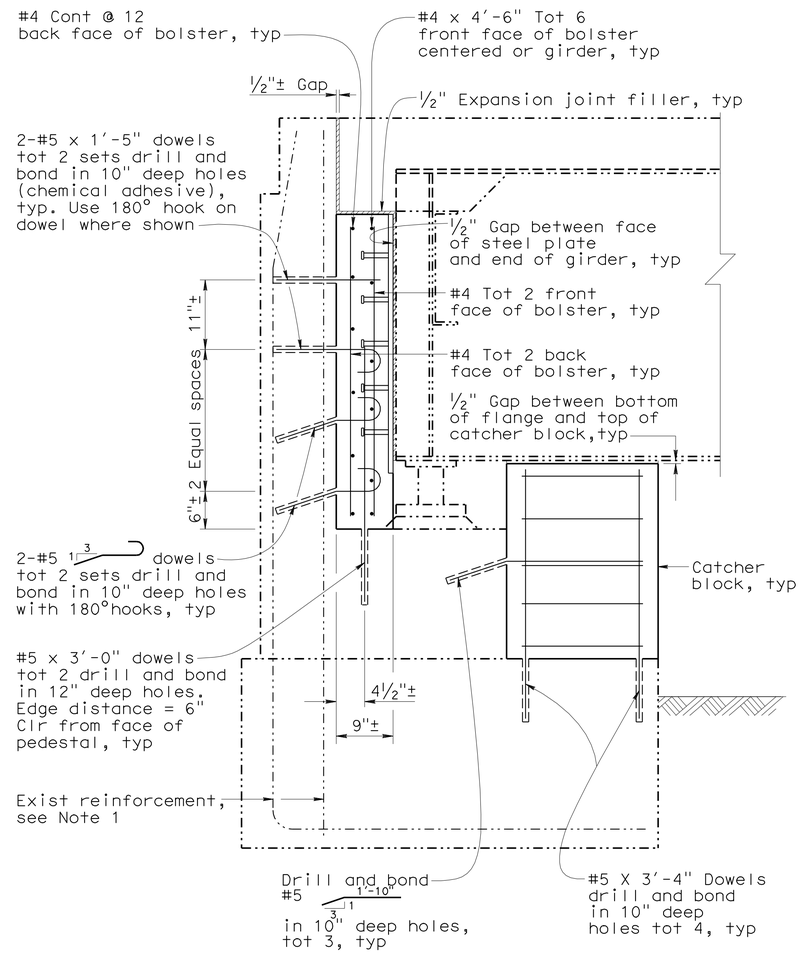

SECTION B-B

1"=1'-0"

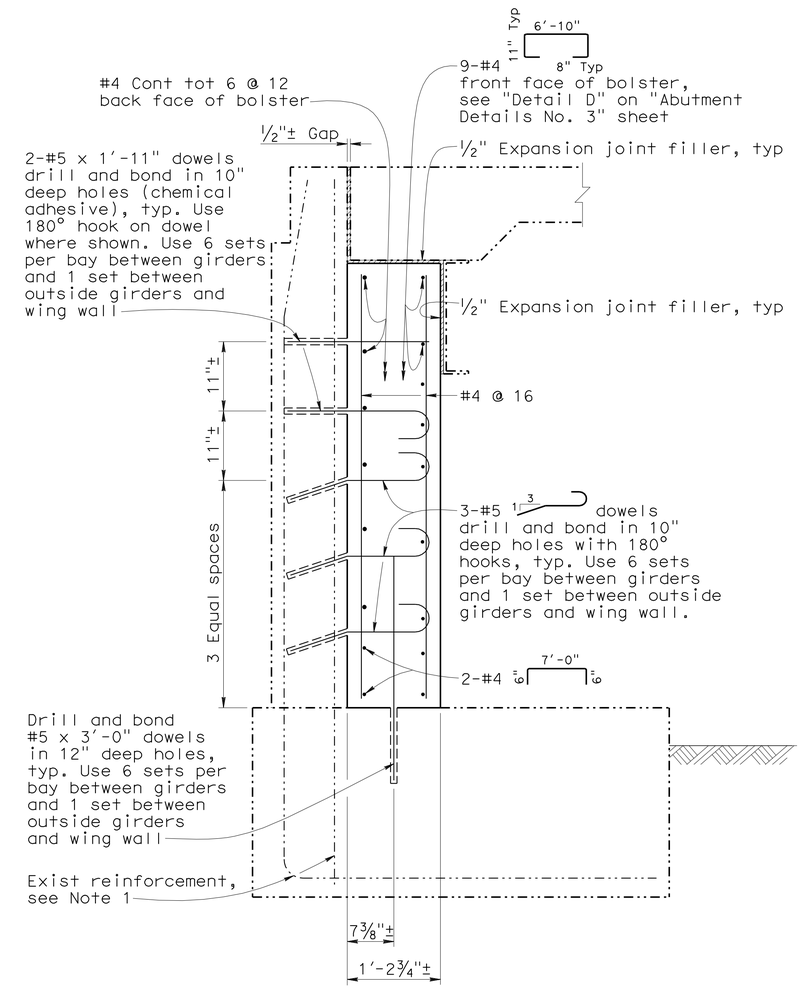

SECTION C-C

1"=1'-0"

NOTE:
THE CONTRACTOR SHALL VERIFY ALL CONTROLLING FIELD DIMENSIONS BEFORE ORDERING OR FABRICATING ANY MATERIAL.

	BY	CHECKED
DESIGN	Paul Mak	Leon Valla
DETAILS	Ton Doan	Leon Valla/Paul Mak
QUANTITIES	Paul Mak	Jeff Klieby

STATE OF CALIFORNIA
DEPARTMENT OF TRANSPORTATION

DIVISION OF ENGINEERING SERVICES
STRUCTURE DESIGN
DESIGN BRANCH 12

BRIDGE NO. 54-0383
POST MILE R120.4

BASIN ROAD OC (SEISMIC RETROFIT)
ABUTMENT DETAILS NO. 2

STRUCTURES DESIGN DETAIL SHEET (ENGLISH) (REV. 10/25/05)

ORIGINAL SCALE IN INCHES FOR REDUCED PLANS 0 1 2 3

CU 08
EA 0G4801

DISREGARD PRINTS BEARING EARLIER REVISION DATES

REVISION DATES: 10-12-10 10-14-10 10-18-10 10-27-10 11-08-10 12-02-10

SHEET 4 OF 12

FILE => 54-0383-f-abut-dt02.dgn

DATE PLOTTED => 08-MAR-2011 TIME PLOTTED => 11:17
tristrk

DIST	COUNTY	ROUTE	POST MILES TOTAL PROJECT	SHEET No	TOTAL SHEETS
08	SBd	15	R111.6,R120.4, R124.2	35	54

REGISTERED CIVIL ENGINEER 12-02-10 DATE

3-7-11
PLANS APPROVAL DATE

REGISTERED PROFESSIONAL ENGINEER Leon Valla No. 45351 Exp. 09-30-12 CIVIL STATE OF CALIFORNIA

The State of California or its officers or agents shall not be responsible for the accuracy or completeness of electronic copies of this plan sheet.

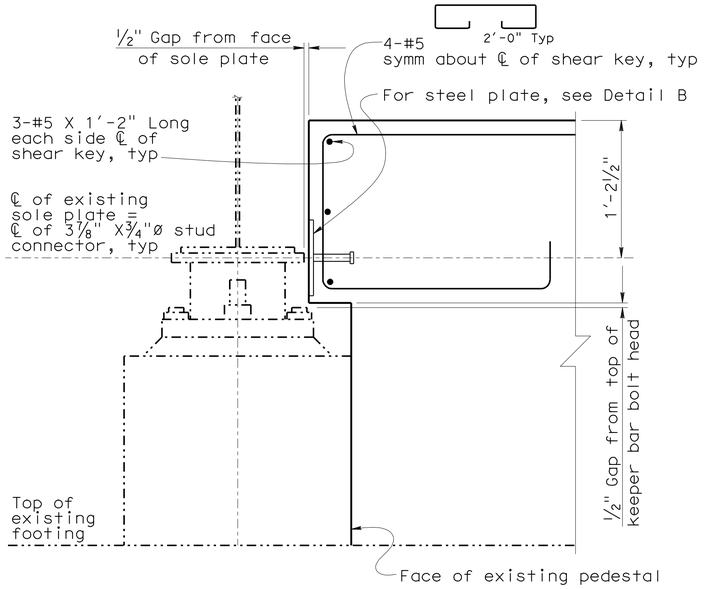

DETAIL A
1 1/2"=1'-0"

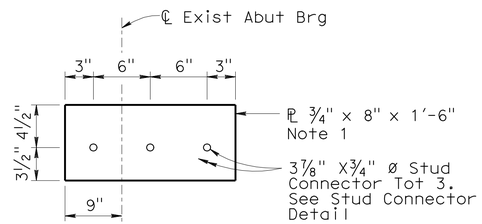

DETAIL B
1 1/2"=1'-0"

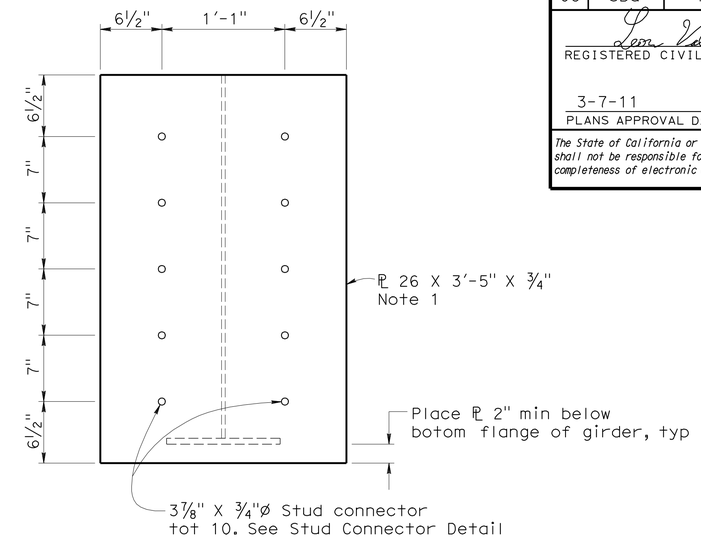

DETAIL C
1 1/2"=1'-0"

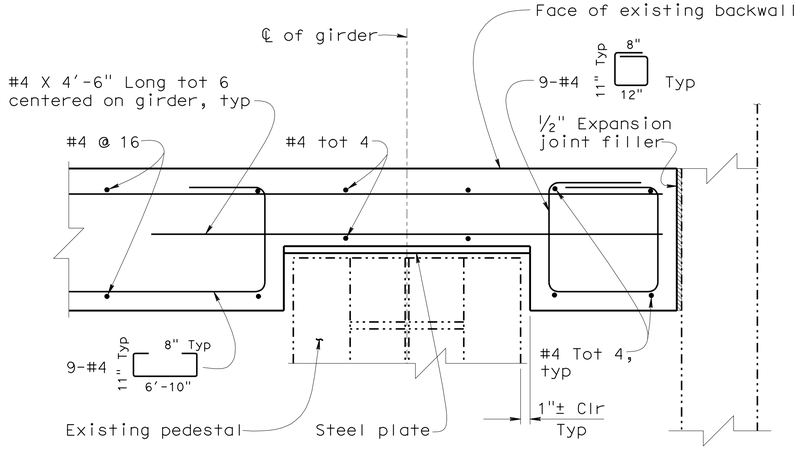

NOTE: Existing abutment and all reinforcement not shown for clarity

DETAIL D
1 1/2"=1'-0"

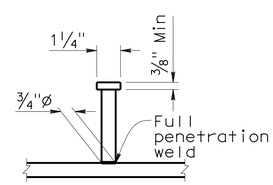

STUD CONNECTOR DETAIL
3"=1'-0"
Note 1

NOTE:

1. Galvanize assembly after fabrication.

NOTE:
THE CONTRACTOR SHALL VERIFY ALL CONTROLLING FIELD DIMENSIONS BEFORE ORDERING OR FABRICATING ANY MATERIAL.

	BY	CHECKED
DESIGN	Paul Mak	Leon Valla
DETAILS	Ton Doan	Leon Valla/Paul Mak
QUANTITIES	Paul Mak	Jeff Klieby

STATE OF CALIFORNIA
DEPARTMENT OF TRANSPORTATION

DIVISION OF ENGINEERING SERVICES
STRUCTURE DESIGN
DESIGN BRANCH 12

BRIDGE NO. 54-0383
POST MILE R120.4

BASIN ROAD OC (SEISMIC RETROFIT)
ABUTMENT DETAILS NO. 3

STRUCTURES DESIGN DETAIL SHEET (ENGLISH) (REV. 10/25/05)

ORIGINAL SCALE IN INCHES FOR REDUCED PLANS 0 1 2 3

CU 08
EA 0G4801

DISREGARD PRINTS BEARING EARLIER REVISION DATES

REVISION DATES: 10-14-10 10-18-10 10-28-10 11-08-10 12-02-10

SHEET 5 OF 12

FILE => 54-0383-f-abut-dt03.dgn

USERNAME => trestrk DATE PLOTTED => 08-MAR-2011 TIME PLOTTED => 11:18

DIST	COUNTY	ROUTE	POST MILES TOTAL PROJECT	SHEET No	TOTAL SHEETS
08	SBd	15	R111.6,R120.4, R124.2	36	54

REGISTERED CIVIL ENGINEER 12-02-10 DATE

3-7-11
PLANS APPROVAL DATE

REGISTERED PROFESSIONAL ENGINEER Leon Valla No. 45351 Exp. 09-30-12 CIVIL STATE OF CALIFORNIA

The State of California or its officers or agents shall not be responsible for the accuracy or completeness of electronic copies of this plan sheet.

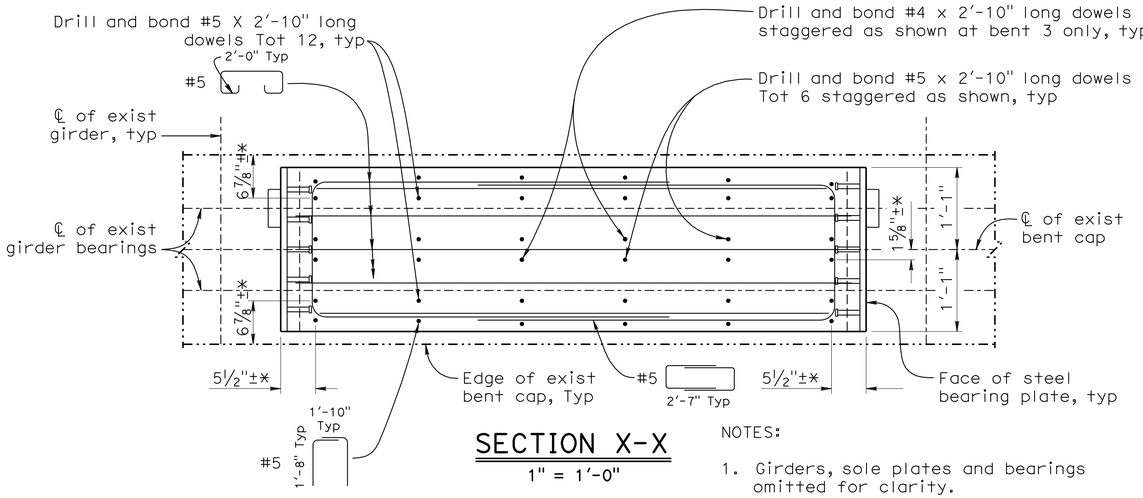

SECTION X-X

1" = 1'-0"

NOTES:

1. Girders, sole plates and bearings omitted for clarity.
2. * ℄ for location of #5 drill and bond dowel typical.

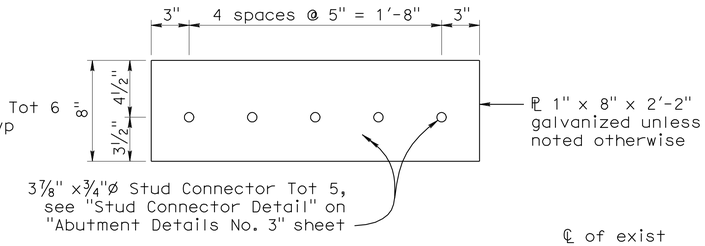

DETAIL B

No Scale

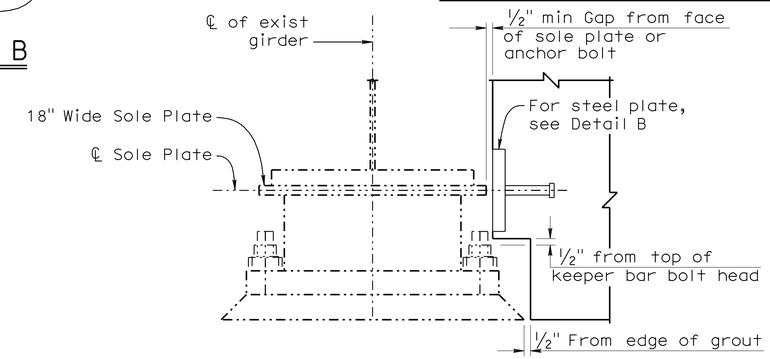

DETAIL C AT 18" WIDE SOLE PLATE

No Scale

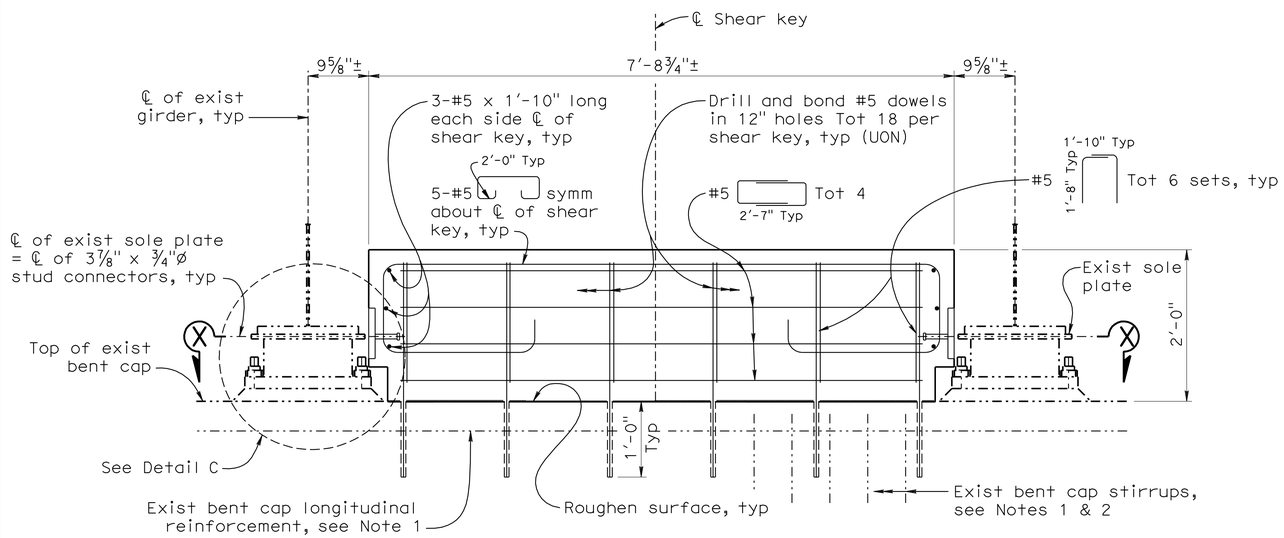

TRANSVERSE SHEAR KEY ELEVATION
(PER BAYS SHOWN ON GENERAL PLAN
TYPICAL SECTION AT BENTS 2, 3, AND 4)

1" = 1'-0"

NOTES:

1. All existing reinforcement including bent cap stirrups to remain undamaged.
2. Not all bent cap stirrups shown for clarity.

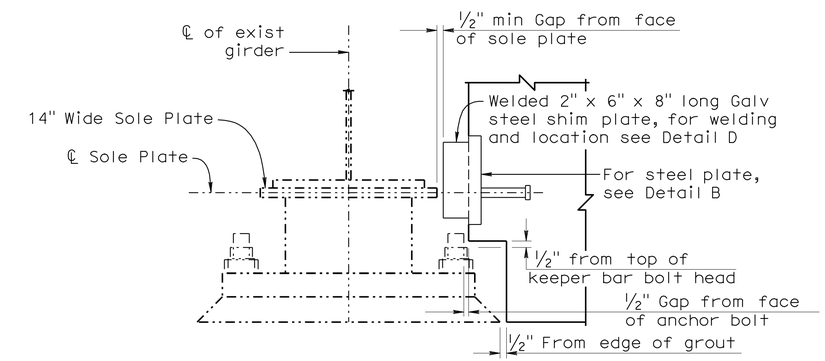

DETAIL C AT 14" WIDE SOLE PLATE

No Scale

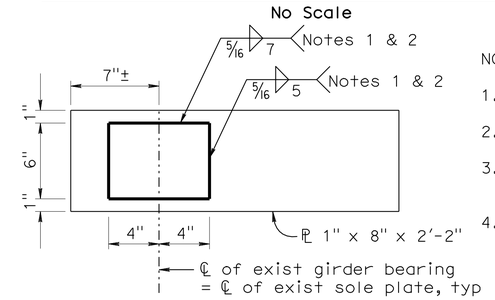

NOTES:

1. No welding on return ends
2. Fy = 50 ksi
3. Galvanize assembly after fabrication
4. 3 7/8" X 3/4"Ø Stud connectors omitted for clarity

DETAIL D

No Scale
Note 3 & 4

NOTE:
THE CONTRACTOR SHALL VERIFY ALL CONTROLLING FIELD DIMENSIONS BEFORE ORDERING OR FABRICATING ANY MATERIAL.

	BY	CHECKED
DESIGN	L. Valla	P. Mak
DETAILS	F. Mendoza	L. Valla
QUANTITIES	P. Mak	J. Kileby

STATE OF CALIFORNIA
DEPARTMENT OF TRANSPORTATION

DIVISION OF ENGINEERING SERVICES
STRUCTURE DESIGN
DESIGN BRANCH 12

BRIDGE NO. 54-0383
POST MILE R120.4

BASIN ROAD OC (SEISMIC RETROFIT)
BENT DETAILS NO. 1

STRUCTURES DESIGN DETAIL SHEET (ENGLISH) (REV. 10/25/05)

ORIGINAL SCALE IN INCHES FOR REDUCED PLANS 0 1 2 3

CU 08
EA 0G4801

DISREGARD PRINTS BEARING EARLIER REVISION DATES

REVISION DATES: 08-18-10 09-08-10 09-13-10 09-14-10 10-13-10 10-28-10 11-08-10 11-18-10 12-02-10

SHEET 6 OF 12

FILE => 54-0383-h-bent-dt01.dgn

USERNAME => trsttrk DATE PLOTTED => 08-MAR-2011 TIME PLOTTED => 11:18

DIST	COUNTY	ROUTE	POST MILES TOTAL PROJECT	SHEET No	TOTAL SHEETS
08	SBd	15	R111.6,R120.4, R124.2	37	54

REGISTERED CIVIL ENGINEER 12-02-10 DATE

3-7-11
PLANS APPROVAL DATE

REGISTERED PROFESSIONAL ENGINEER Leon Valla No. 45351 Exp. 09-30-12 CIVIL STATE OF CALIFORNIA

The State of California or its officers or agents shall not be responsible for the accuracy or completeness of electronic copies of this plan sheet.

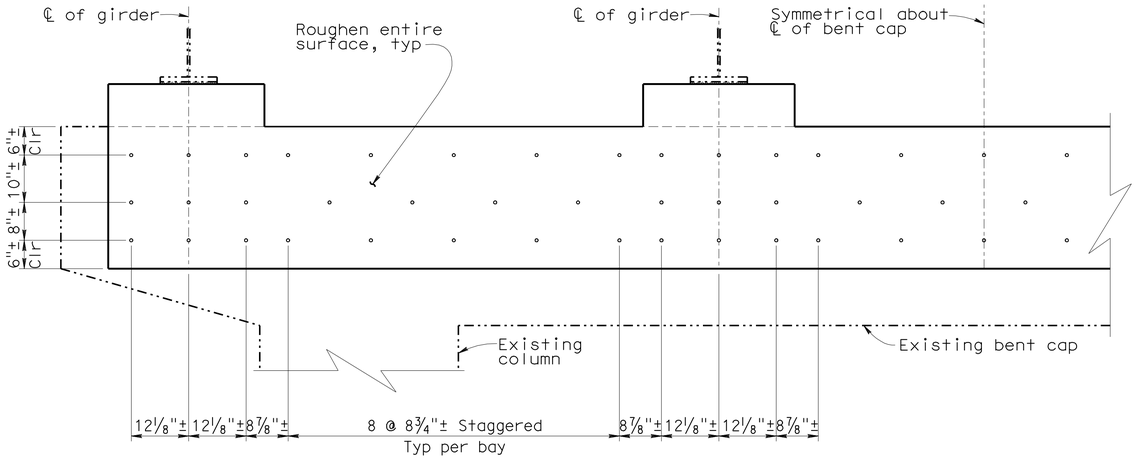

CATCHER BEAM #5 DRILL AND BOND DOWEL ELEVATION AT BENTS 2-4

3/4"=1'-0"

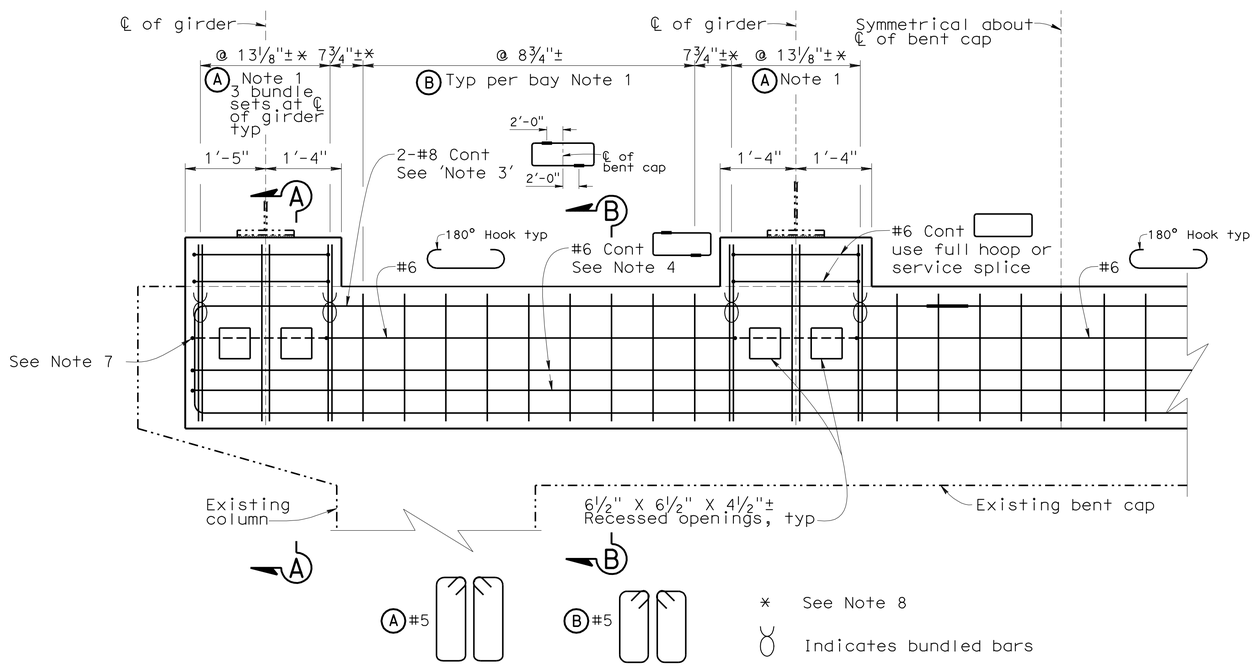

CATCHER BEAM STIRRUP AND MAIN REINFORCEMENT ELEVATION AT BENTS 2-4

3/4"=1'-0"

Not all reinforcement shown for clarity

NOTES:

1. Match all stirrup spacing with #5 drill and bond locations, typ. (Up or down hook, typ)
2. All reinforcing and/or service splicing not shown for clarity.
3. All splicing of #8 cont reinforcement must be done with service splice staggered about ℄ of bent cap.
4. Service splicing of #6 cont reinforcement at same staggered locations as #8 cont.
5. Shear keys and existing bearings not shown for clarity.
6. For "Section A-A" and "Section B-B" see "Bent Details No. 3" sheet.
7. See "Note 4" on "Bent Details No. 3" sheet.
8. Dimensions taken from ℄ of bundled stirrups, typ.
9. All existing longitudinal restrainers must be removed before catcher beams can be constructed.

NOTE:
THE CONTRACTOR SHALL VERIFY ALL CONTROLLING FIELD DIMENSIONS BEFORE ORDERING OR FABRICATING ANY MATERIAL.

	BY	CHECKED
DESIGN	Leon Valla	Paul Mak
DETAILS	Ton Doan	Paul Mak
QUANTITIES	Paul Mak	Jeff Klieby

STATE OF CALIFORNIA
DEPARTMENT OF TRANSPORTATION

DIVISION OF ENGINEERING SERVICES
STRUCTURE DESIGN
DESIGN BRANCH 12

BRIDGE NO. 54-0383
POST MILE R120.4

BASIN ROAD OC (SEISMIC RETROFIT)
BENT DETAILS NO. 2

STRUCTURES DESIGN DETAIL SHEET (ENGLISH) (REV. 10/25/05)

ORIGINAL SCALE IN INCHES FOR REDUCED PLANS 0 1 2 3

CU 08
EA 0G4801

DISREGARD PRINTS BEARING EARLIER REVISION DATES

REVISION DATES: 10-05-10 10-28-10 11-08-10 12-02-10

SHEET 7 OF 12

FILE => 54-0383-h-bent-dt02.dgn

USERNAME => ttrstrk DATE PLOTTED => 08-MAR-2011 TIME PLOTTED => 11:18

DIST	COUNTY	ROUTE	POST MILES TOTAL PROJECT	SHEET No	TOTAL SHEETS
08	SBd	15	R111.6,R120.4, R124.2	38	54

Leon Valla 12-02-10
REGISTERED CIVIL ENGINEER DATE

3-7-11
PLANS APPROVAL DATE

REGISTERED PROFESSIONAL ENGINEER Leon Valla No. 45351 Exp. 09-30-12 CIVIL STATE OF CALIFORNIA

The State of California or its officers or agents shall not be responsible for the accuracy or completeness of electronic copies of this plan sheet.

NOTES:

1. For details not shown see "Continuity Plate Details" sheet.
2. All existing reinforcement including bent cap stirrups to remain undamaged.
3. All washers on 1¼"Ø high strength rods to bearing plates to be 2 inches minimum diameter. All stirrups reinforcement, and drill and bond dowels to be 2" clear from the edge of 6½" X 6½" X 4½"± recess openings except #4 grillage is 1" clr, typ. 1¼"Ø high strength rod connections to be recessed flush with out-side edge of catcher beams, typ.
4. Reinforcement to hook and continue around ends of catcher beams like #6 cont in "Section C-C" on "Bent Details No. 4" sheet. Stop reinforcement 2" clr of 1¼"Ø high strength rod recess openings, typ.
5. For "Section C-C", "Section D-D" and "Section E-E", see "Bent Details No. 4" sheet.
6. Reinforcement is symmectrical around ℄ of existing bent cap.

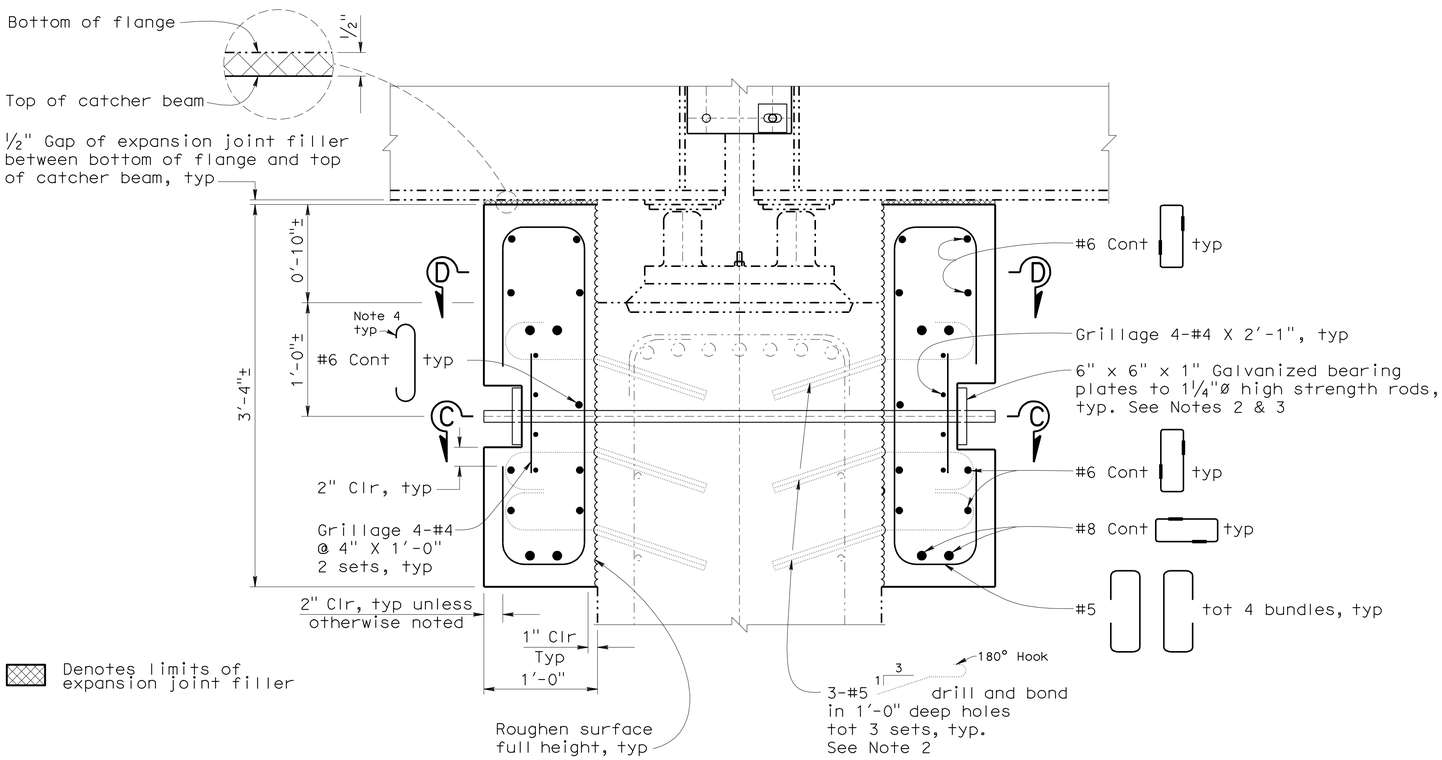

SECTION A-A

1 1/2"=1'-0"

See Note 6

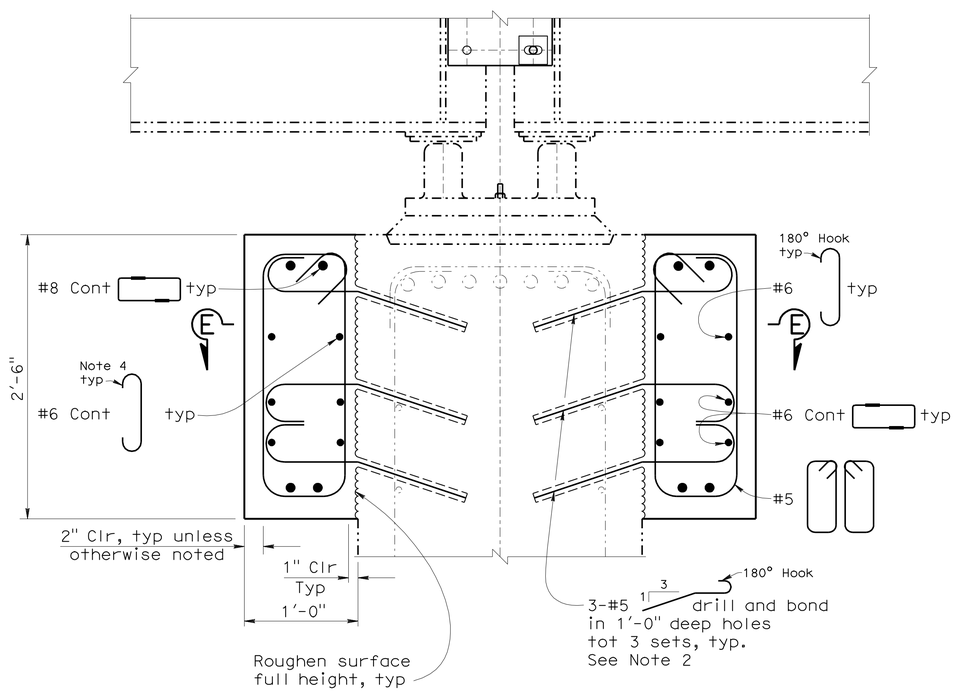

SECTION B-B

1 1/2"=1'-0"

See Note 6

NOTE:
THE CONTRACTOR SHALL VERIFY ALL CONTROLLING FIELD DIMENSIONS BEFORE ORDERING OR FABRICATING ANY MATERIAL.

	BY	CHECKED
DESIGN	Leon Valla	Paul Mak
DETAILS	Ton Doan	Paul Mak
QUANTITIES	Paul Mak	Jeff Klieby

STATE OF CALIFORNIA
DEPARTMENT OF TRANSPORTATION

DIVISION OF ENGINEERING SERVICES
STRUCTURE DESIGN
DESIGN BRANCH 12

BRIDGE NO. 54-0383
POST MILE R120.4

BASIN ROAD OC (SEISMIC RETROFIT)
BENT DETAILS NO. 3

STRUCTURES DESIGN DETAIL SHEET (ENGLISH) (REV. 10/25/05)

ORIGINAL SCALE IN INCHES FOR REDUCED PLANS 0 1 2 3

CU 08
EA 0G4801

DISREGARD PRINTS BEARING EARLIER REVISION DATES
REVISION DATES: 10-05-10 10-28-10 11-08-10 12-02-10

SHEET 8 OF 12

FILE => 54-0383-h-bent-dt03.dgn

USERNAME => trstrk DATE PLOTTED => 08-MAR-2011 TIME PLOTTED => 11:18

DIST	COUNTY	ROUTE	POST MILES TOTAL PROJECT	SHEET No	TOTAL SHEETS
08	SBd	15	R111.6,R120.4, R124.2	39	54

REGISTERED CIVIL ENGINEER 12-02-10 DATE

3-7-11
PLANS APPROVAL DATE

REGISTERED PROFESSIONAL ENGINEER Leon Valla No. 45351 Exp. 09-30-12 CIVIL STATE OF CALIFORNIA

The State of California or its officers or agents shall not be responsible for the accuracy or completeness of electronic copies of this plan sheet.

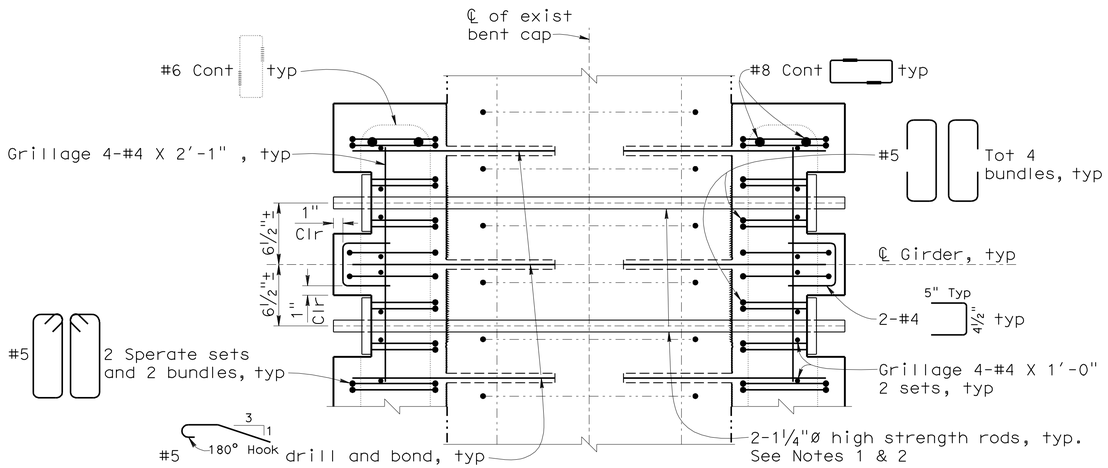

SECTION C-C

1 1/2"=1'-0"

At ℄ of 6½" X 6½" recess opening

See Note 3

NOTES:

1. All existing reinforcement including bent cap stirrups to remain undamaged.
2. All 1¼"ø high strength rods to be tightened to an ultimate load of 80 kips. Core in 1½"ø holes and pressure grout, typ.
3. Reinforcement is symmectrical around ℄ of existing bent cap.
4. See "Note 4" on "Bent Details No. 3" sheet.

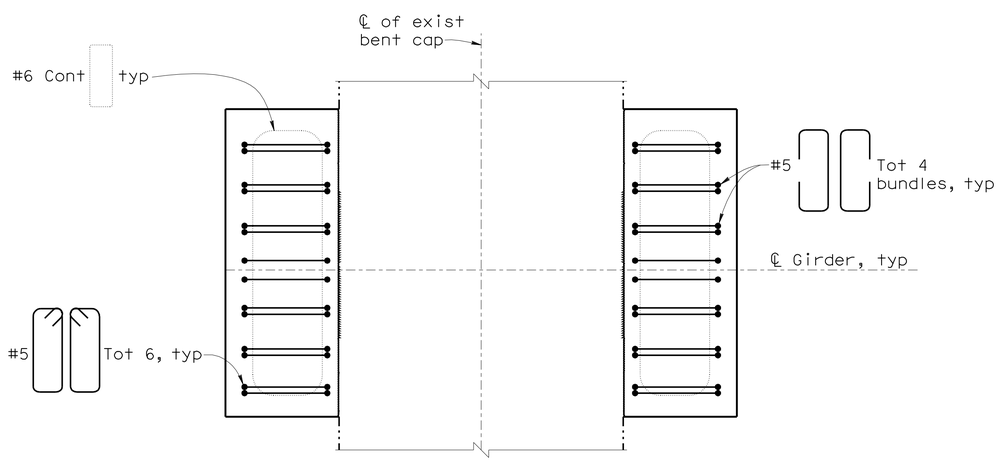

SECTION D-D

1 1/2"=1'-0"

Above top of existing bent cap

See Note 3

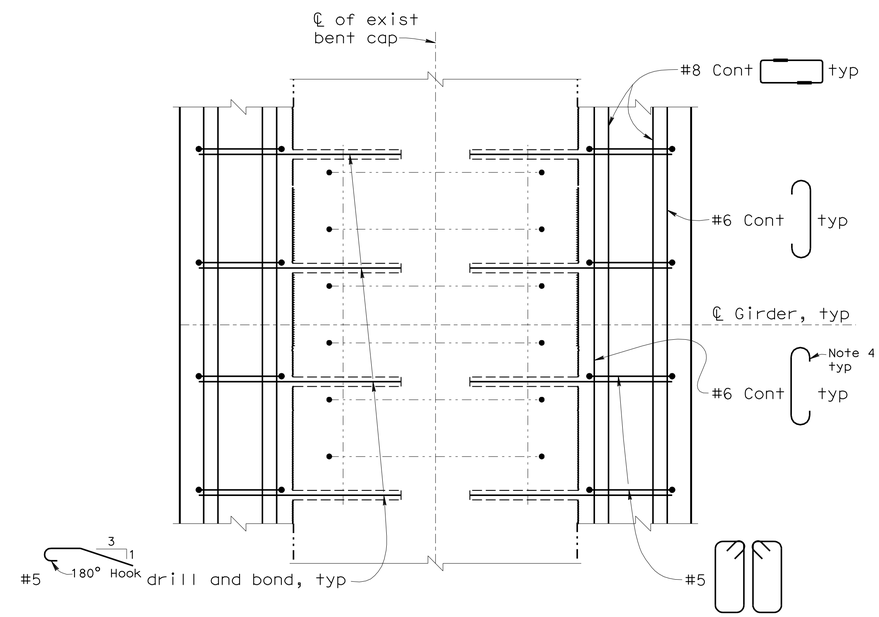

SECTION E-E

1 1/2"=1'-0"

See Note 3

NOTE:
THE CONTRACTOR SHALL VERIFY ALL CONTROLLING FIELD DIMENSIONS BEFORE ORDERING OR FABRICATING ANY MATERIAL.

	BY	CHECKED
DESIGN	Leon Valla	Paul Mak
DETAILS	Ton Doan	Paul Mak
QUANTITIES	Paul Mak	Jeff Klieby

STATE OF CALIFORNIA
DEPARTMENT OF TRANSPORTATION

DIVISION OF ENGINEERING SERVICES
STRUCTURE DESIGN
DESIGN BRANCH 12

BRIDGE NO. 54-0383
POST MILE R120.4

BASIN ROAD OC (SEISMIC RETROFIT)
BENT DETAILS NO. 4

STRUCTURES DESIGN DETAIL SHEET (ENGLISH) (REV. 10/25/05)

ORIGINAL SCALE IN INCHES FOR REDUCED PLANS 0 1 2 3

CU 08
EA 0G4801

DISREGARD PRINTS BEARING EARLIER REVISION DATES

REVISION DATES: 10-05-10 10-28-10 12-02-10

SHEET 9 OF 12

FILE => 54-0383-h-bent-dt04.dgn

USERNAME => trstrk DATE PLOTTED => 08-MAR-2011 TIME PLOTTED => 11:18

DIST.	COUNTY	ROUTE	KILOMETER POST TOTAL PROJECT	SHEET NO.	TOTAL SHEETS
08	SBd	15	R111.6,R120.4, R124.2	40	54

REGISTERED ENGINEER - CIVIL 12-02-10

REGISTERED PROFESSIONAL ENGINEER Leon Valla No. 45351 Exp. 09-30-12 CIVIL STATE OF CALIFORNIA

3-7-11
PLANS APPROVAL DATE

The State of California or its officers or agents shall not be responsible for the accuracy or completeness of electronic copies of this plan sheet.

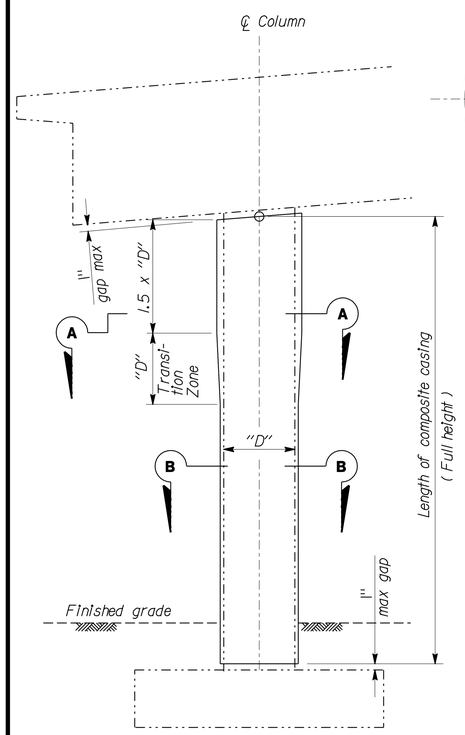

◇2 COLUMN RETROFIT

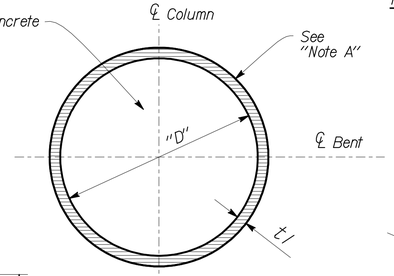

SECTION A-A

Note A:
Epoxy Resin-Carbon Composite

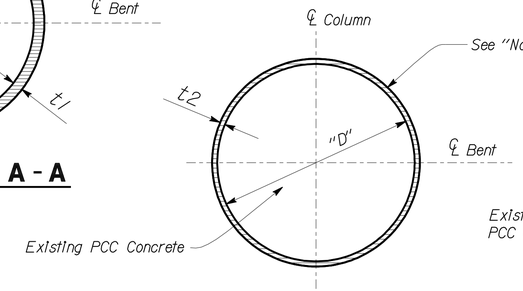

SECTION B-B

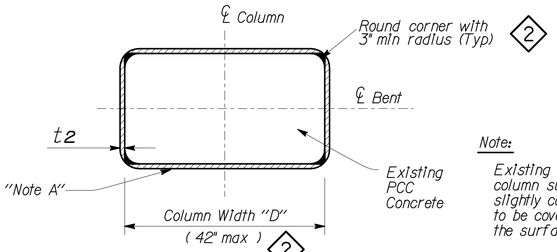

◇2

SECTION B-B

Note:
Existing rectangular column concrete column surfaces shall be straight or slightly convex outward at all areas to be covered by jackets; otherwise, the surface shall be filled with epoxy.

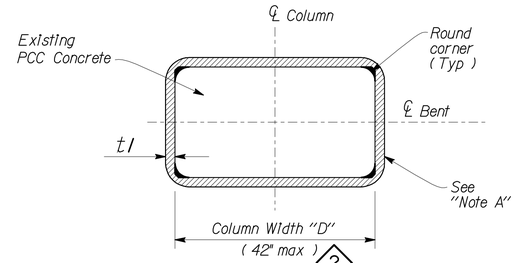

◇2

SECTION A-A

◇1

E-Glass Notes:

1. Each composite section shall be wrapped using continuous E-glass fabric not less than 610 mm in height. All wraps of continuous E-glass weave shall be terminated a minimum of 305 mm past the starting point of the initial wrap. Subsequent wraps shall be started (butted) at the ending point of the last wrap.
2. All cut edges shall be sealed with epoxy.

Carbon Notes: ◇2

1. Pre-preg carbon jacket shall be completely cured by elevated temperature.
2. Pre-preg carbon fiber spools shall contain continuous strands not less than 100 ft in length.

General Notes:

1. For hexagonal or octagonal columns use composite thickness specified in "Rectangular Column" table.
2. Remove any sharp corners to 1½" radius minimum.
3. All materials shall be protected from moisture.
4. Drainage opening reinforcement shall be of the same material used for the column casing
5. The casing thickness shall taper evenly the full length of the transition zone.
6. The composite casing shall adhere firmly to all surfaces of the existing column.

LEGEND

-·-·-·-·-	Indicates Existing Structure
———	Indicates New Construction
t1, t2	Denotes Minimum Thickness of Accumulated Dry E-Glass Wraps or completed Carbon Jacket thickness (excluding coatings)

◇1 **SYSTEM 1**
FIBER VOLUME = 35% min

E-GLASS		
COLUMN DIA	t1 (min)	t2 (min)
305	5	2.5
610	10	5
914	15	7
1219 max	20	10

E-GLASS RECTANGULAR COLUMN		
COLUMN WIDTH	t1 (min)	t2 (min)
305	7.6	3.8
610	15	7.6
914 max	22	11

◇2 **SYSTEM 2**
FIBER VOLUME = 50% min

CARBON ROUND COLUMN		
COLUMN DIA	t1 (min)	t2 (min)
12"	0.05"	0.05"
24"	0.08"	0.05"
36"	0.12"	0.06"
48 max	0.16"	0.08"

CARBON RECTANGULAR COLUMN		
COLUMN WIDTH	t1 (min)	t2 (min)
12"	0.06"	0.05"
24"	0.12"	0.06"
42" max	0.18"	0.09"

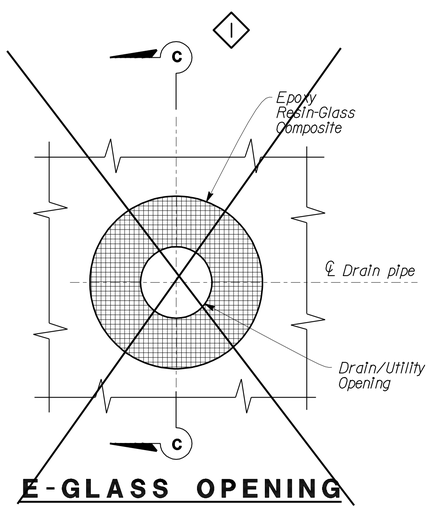

E-GLASS OPENING

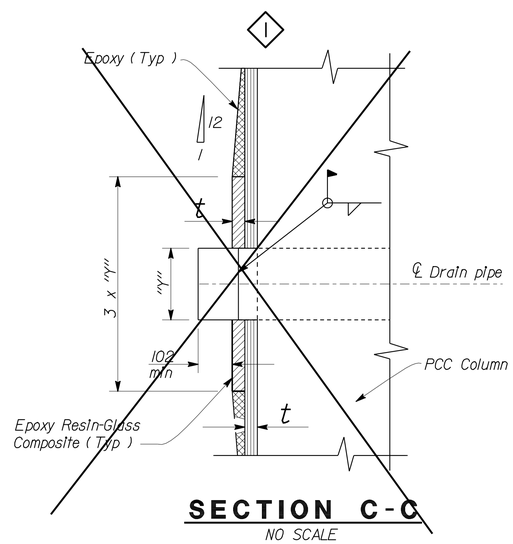

SECTION C-C

NO SCALE

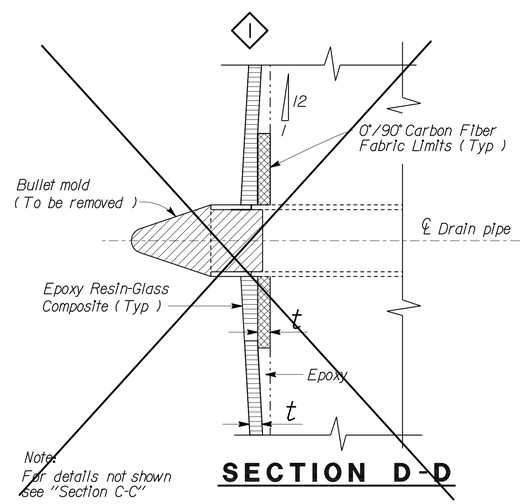

Note:
For details not shown See "Section C-C"

SECTION D-D

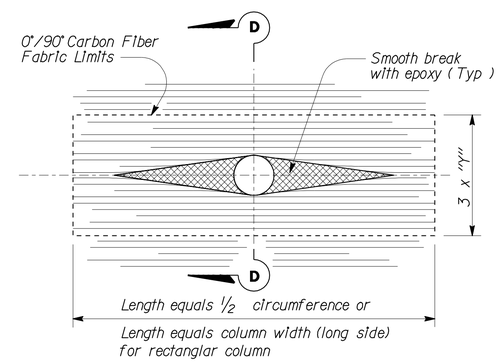

CARBON OPENING

NO SCALE
ALL DIMENSIONS ARE IN INCHES UNLESS OTHERWISE SHOWN

STANDARD DRAWING

RELEASE DATE	REVISED	DESIGN	BY PAT HIPLEY	CHECKED RAY ZELINSKI	RELEASED BY
FILE NO.	xs7-210	DETAILS	BY R. YEE	CHECKED PAT HIPLEY	
		SUBMITTED	BY RAY ZELINSKI	DRAWING DATE 4/96	OFFICE CHIEF

DS OSD 2147A (CADD 8/95)

◇1 Delete notes and details
◇2 Revise details

STATE OF CALIFORNIA
DEPARTMENT OF TRANSPORTATION

DIVISION OF ENGINEERING SERVICES

CU: 08
EA: 0G4801

BRIDGE NO. 54-0383
POST MILE R120.4

BASIN ROAD OC (SEISMIC RETROFIT)
COMPOSITE COLUMN CASING

DISREGARD PRINTS BEARING EARLIER REVISION DATES → 07-06-10 10-13-10 12-02-10

REVISION DATES (PRELIMINARY STAGE ONLY) SHEET 10 OF 12

USERNAME => trstrk

DATE PLOTTED => 08-MAR-2011 TIME PLOTTED => 11:18

54-0383-j-ccdt01.d

DIST	COUNTY	ROUTE	POST MILES TOTAL PROJECT	SHEET No	TOTAL SHEETS
08	SBd	15	R111.6,R120.4, R124.2	41	54

Leon Valla 12-02-10
REGISTERED CIVIL ENGINEER DATE

3-7-11
PLANS APPROVAL DATE

REGISTERED PROFESSIONAL ENGINEER
Leon Valla
No. 45351
Exp. 09-30-12
CIVIL
STATE OF CALIFORNIA

The State of California or its officers or agents shall not be responsible for the accuracy or completeness of electronic copies of this plan sheet.

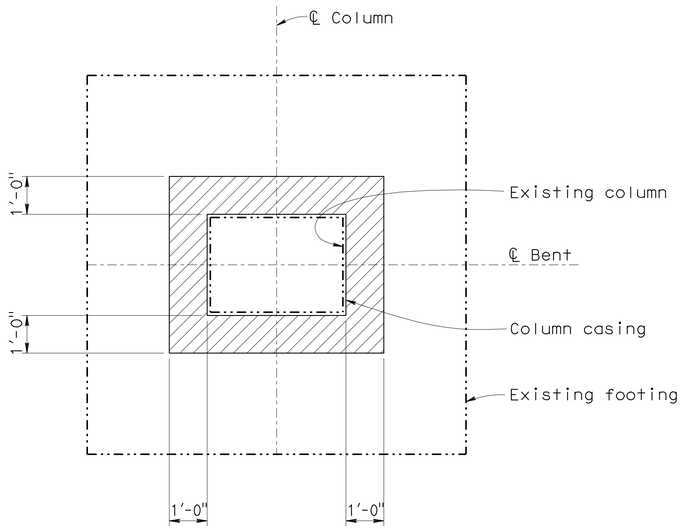

PLAN
1/2"=1'-0"

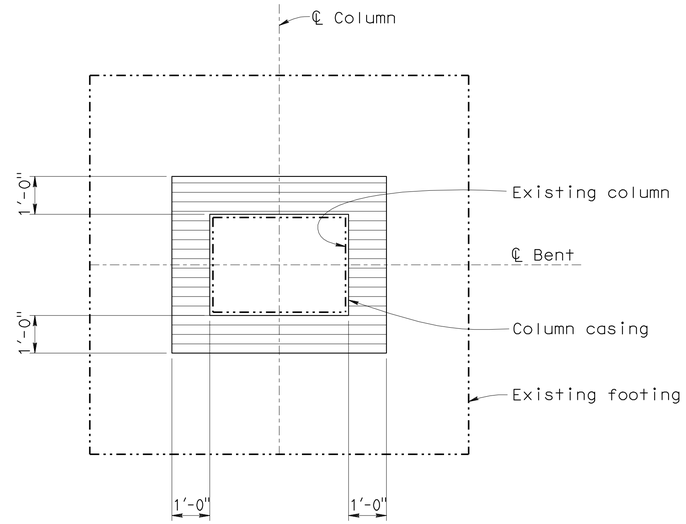

PLAN
1/2"=1'-0"

Legend:

Indicates limits of structure excavation (Bridge)

Indicates limits of structure back-fill (Bridge)

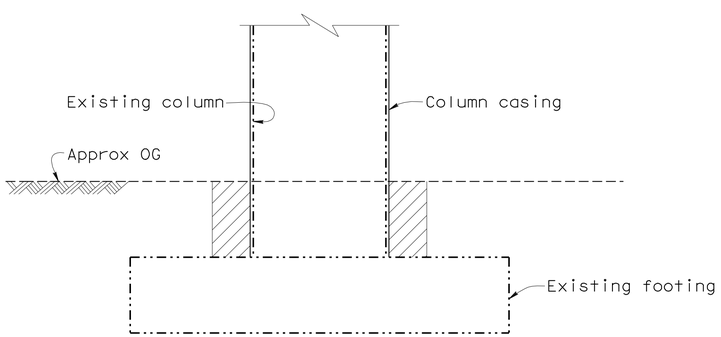

ELEVATION
1/2"=1'-0"

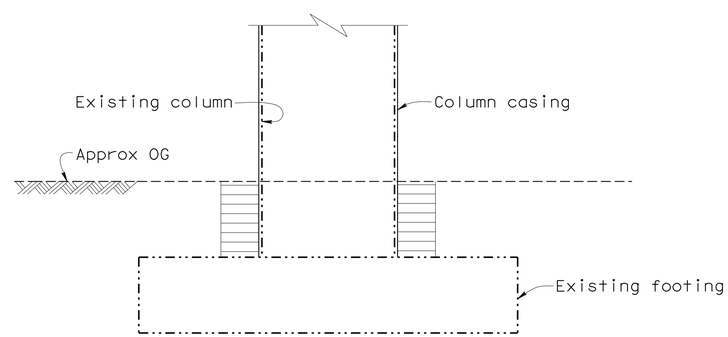

ELEVATION
1/2"=1'-0"

NOTE:
THE CONTRACTOR SHALL VERIFY ALL CONTROLLING FIELD DIMENSIONS BEFORE ORDERING OR FABRICATING ANY MATERIAL.

DESIGN	BY Leon Valla	CHECKED Paul Mak	
DETAILS	BY Ton Doan	CHECKED Leon Valla/Paul Mak	
QUANTITIES	BY P. Mak	CHECKED J. Klieby	

STATE OF CALIFORNIA
DEPARTMENT OF TRANSPORTATION

DIVISION OF ENGINEERING SERVICES
STRUCTURE DESIGN
DESIGN BRANCH 12

BRIDGE NO. 54-0383
POST MILE R120.4

BASIN ROAD OC (SEISMIC RETROFIT)
COMPOSITE COLUMN CASING DETAILS

STRUCTURES DESIGN DETAIL SHEET (ENGLISH) (REV. 10/25/05)

ORIGINAL SCALE IN INCHES FOR REDUCED PLANS 0 1 2 3

CU 08
EA 0G4801

DISREGARD PRINTS BEARING EARLIER REVISION DATES

REVISION DATES: ~~06-30-10~~ ~~10-13-10~~ 12-02-10

SHEET 11 OF 12

FILE => 54-0383-j-ccdt02.dgn

USERNAME => trstrk DATE PLOTTED => 08-MAR-2011 TIME PLOTTED => 11:19

DIST	COUNTY	ROUTE	POST MILES TOTAL PROJECT	SHEET No	TOTAL SHEETS
08	SBd	15	R111.6,R120.4, R124.2	42	54

REGISTERED CIVIL ENGINEER 12-02-10 DATE

3-7-11
PLANS APPROVAL DATE

REGISTERED PROFESSIONAL ENGINEER Leon Valla No. 45351 Exp. 09-30-12 CIVIL STATE OF CALIFORNIA

The State of California or its officers or agents shall not be responsible for the accuracy or completeness of electronic copies of this plan sheet.

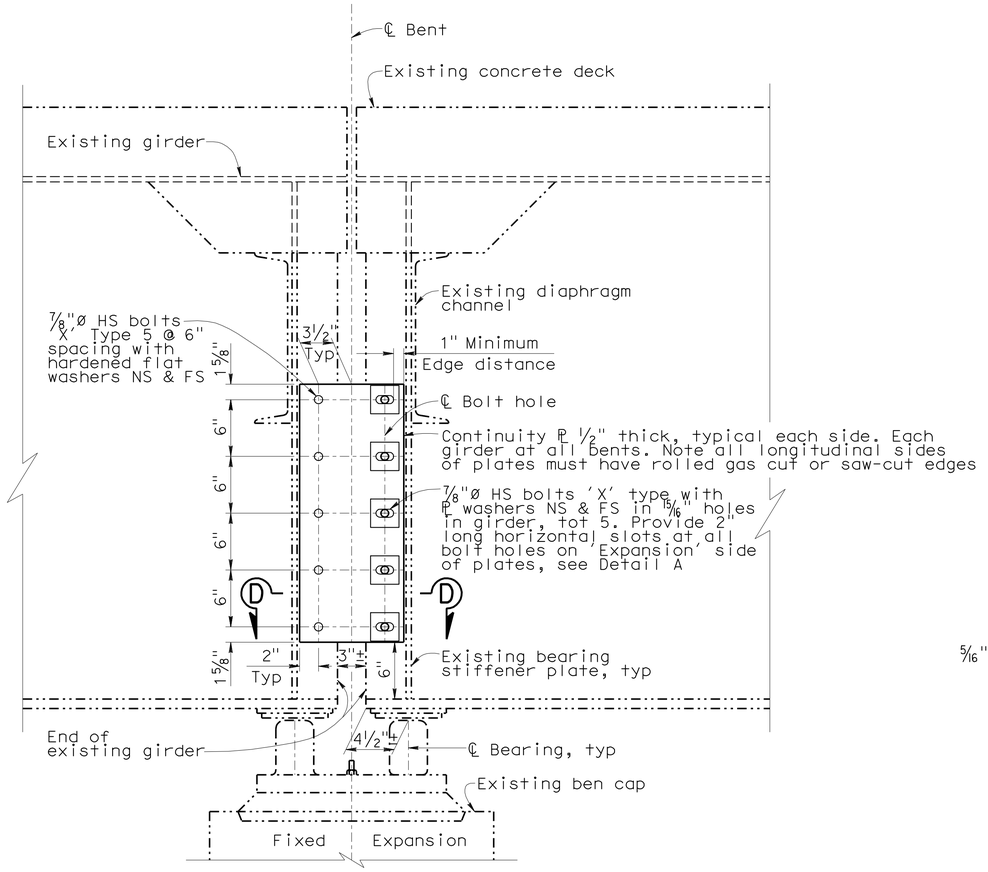

ELEVATION VIEW

1-1/2"=1'-0"

Notes 1 & 2

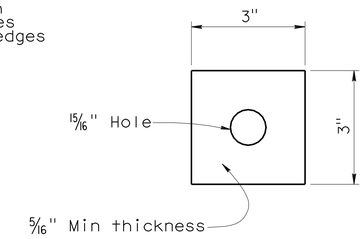

PLATE WASHER DETAIL

6"=1'-0"

NOTES:

1. All continuity plates must be installed first before existing longitudinal restrainers are removed.
2. Galvanize all parts after fabrication.

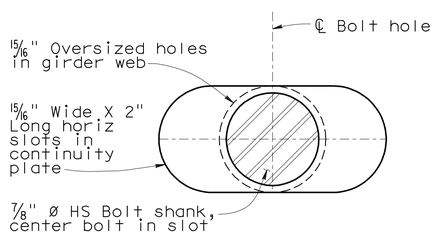

DETAIL A

NO SCALE

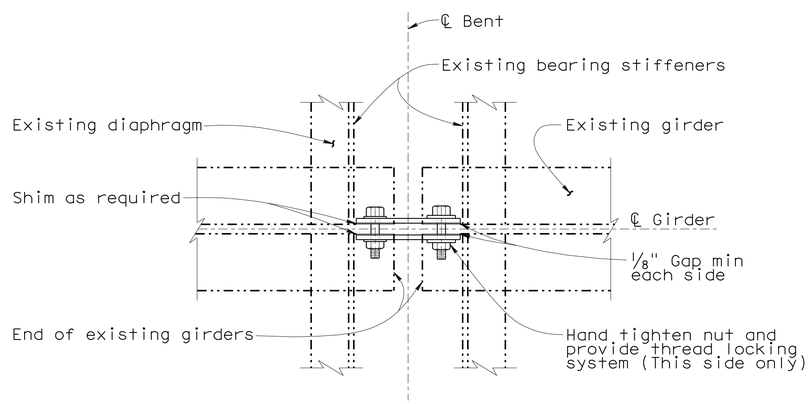

SECTION D-D

1-1/2"=1'-0"

NOTE:
THE CONTRACTOR SHALL VERIFY ALL CONTROLLING FIELD DIMENSIONS BEFORE ORDERING OR FABRICATING ANY MATERIAL.

	BY	CHECKED
DESIGN	Leon Valla	Paul Mak
DETAILS	Ton Doan	Leon Valla/Paul Mak
QUANTITIES	P. Mak	J. Klieby

STATE OF CALIFORNIA DEPARTMENT OF TRANSPORTATION

DIVISION OF ENGINEERING SERVICES STRUCTURE DESIGN DESIGN BRANCH 12

BRIDGE NO. 54-0383
POST MILE R120.4

BASIN ROAD OC (SEISMIC RETROFIT)
CONTINUITY PLATE DETAILS

STRUCTURES DESIGN DETAIL SHEET (ENGLISH) (REV. 10/25/05)

ORIGINAL SCALE IN INCHES FOR REDUCED PLANS 0 1 2 3

CU 08
EA 0G4801

DISREGARD PRINTS BEARING EARLIER REVISION DATES

REVISION DATES: 06-25-10 06-28-10 08-24-10 10-13-10 11-08-10 11-10-10 12-02-10

SHEET 12 OF 12

FILE => 54-0383-u-miscdt01.dgn

USERNAME => trsitk DATE PLOTTED => 08-MAR-2011 TIME PLOTTED => 11:13

DIST	COUNTY	ROUTE	POST MILES TOTAL PROJECT	SHEET No	TOTAL SHEETS
08	SBd	15	R111.6,R120.4, R124.2	43	54

REGISTERED CIVIL ENGINEER 12-02-10 DATE

3-7-11
PLANS APPROVAL DATE

REGISTERED PROFESSIONAL ENGINEER Leon Valla No. 45351 Exp. 09-30-12 CIVIL STATE OF CALIFORNIA

The State of California or its officers or agents shall not be responsible for the accuracy or completeness of electronic copies of this plan sheet.

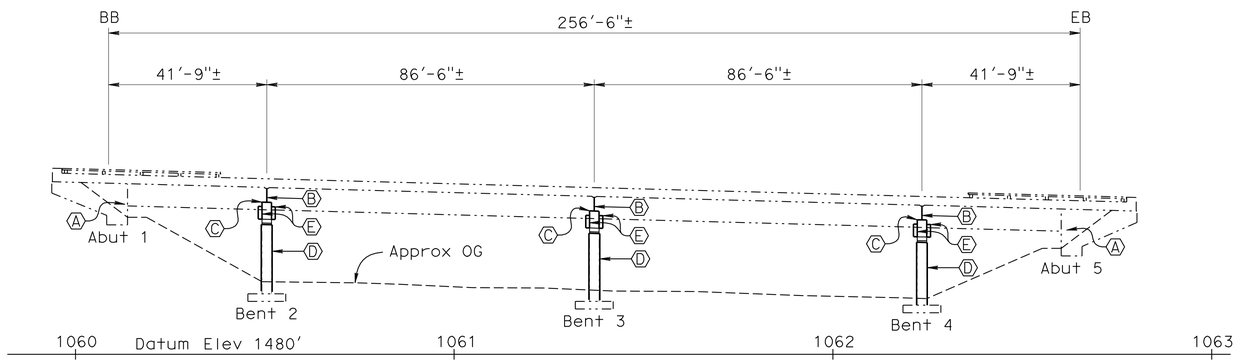

ELEVATION
1" = 20'-0"

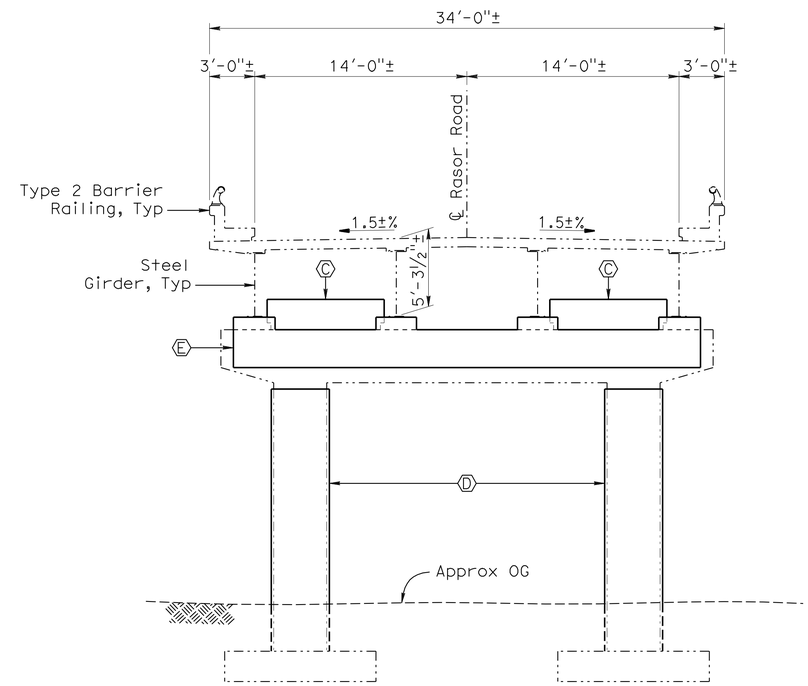

TYPICAL SECTION
1" = 5'-0"

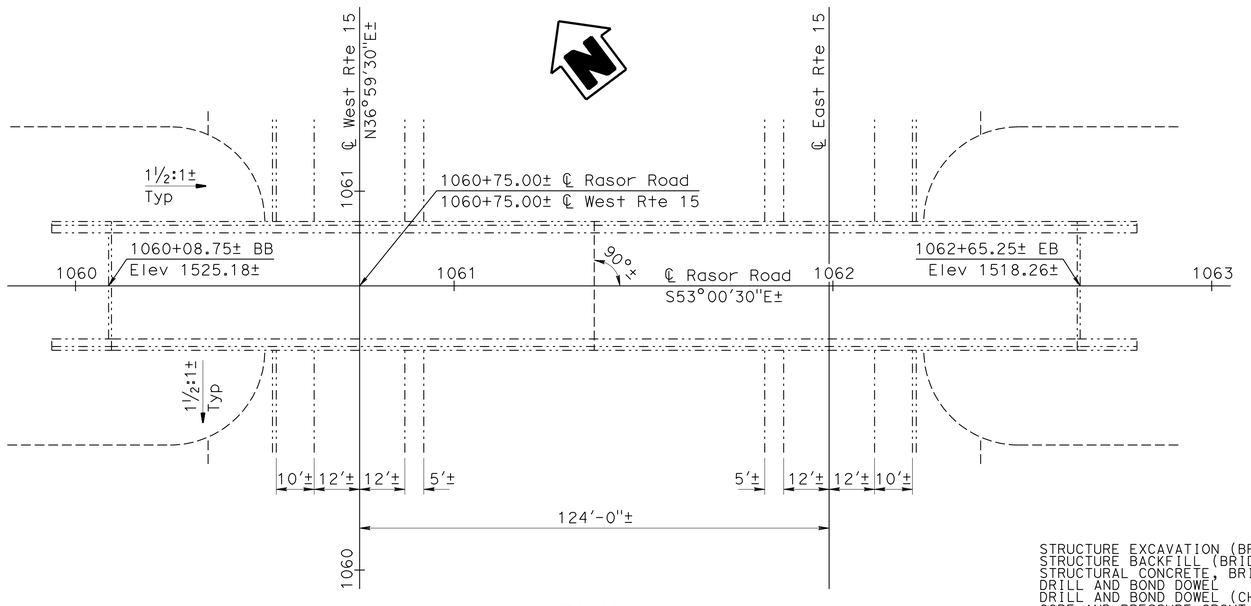

PLAN
1" = 20'-0"

QUANTITIES

STRUCTURE EXCAVATION (BRIDGE)	7	CY
STRUCTURE BACKFILL (BRIDGE)	7	CY
STRUCTURAL CONCRETE, BRIDGE	52	CY
DRILL AND BOND DOWEL	955	LF
DRILL AND BOND DOWEL (CHEMICAL ADHESIVE)	112	EA
CORE AND PRESSURE GROUT DOWELS	60	LF
BAR REINFORCING STEEL (BRIDGE)	16,780	LB
COMPOSITE COLUMN CASING	1,125	SQFT
MISCELLANEOUS METAL (BRIDGE)	4,928	LB

LEGEND

- Indicates Existing Structures
- Ⓐ Abutment Retrofit consisting of Bolsters, Shear Keys, and Catcher Blocks
- Ⓑ Continuity Plates
- Ⓒ Transverse Shear Keys
- Ⓓ Composite Column Casings
- Ⓔ Catcher Beams each side ℄ of Bents (Typ)

For Index To Plans see "INDEX TO PLANS" sheet

Matt Holm
DESIGN ENGINEER

	BY	CHECKED		
DESIGN	Leon Valla	Paul Mak	LOAD & RESISTANCE FACTOR DESIGN	LIVE LOADING: HL93 W/"LOW-BOY"; PERMIT DESIGN VEHICLE
DETAILS	Federico Mendoza	Leon Valla	LAYOUT: Federico Mendoza	Leon Valla
QUANTITIES	Paul Mak	Jeff Klieby	SPECIFICATIONS: X	PLANS AND SPECS COMPARED: Jennifer Ramirez

ORIGINAL SCALE IN INCHES FOR REDUCED PLANS 0 1 2 3

STATE OF CALIFORNIA
DEPARTMENT OF TRANSPORTATION

DIVISION OF ENGINEERING SERVICES
STRUCTURE DESIGN
DESIGN BRANCH 12

CU 08
EA 0G4801

BRIDGE NO. 54-0391
POST MILE 124.2

RASOR ROAD OC (SEISMIC RETROFIT)
GENERAL PLAN

DISREGARD PRINTS BEARING EARLIER REVISION DATES

REVISION DATES: 04-21-10 11-12-10 12-02-10 12-15-10 08-06-10 08-10-10 08-25-10 10-01-10 11-04-10

SHEET 1 OF 12

USERNAME => trstrk DATE PLOTTED => 08-MAR-2011 TIME PLOTTED => 11:19

STRUCTURES DESIGN GENERAL PLAN SHEET (ENGLISH) (REV.07-24-06)

FILE => 54-0391-a-gp01.dgn

DIST	COUNTY	ROUTE	POST MILES TOTAL PROJECT	SHEET No	TOTAL SHEETS
08	SBd	15	R111.6,R120.4, R124.2	44	54

Leon Valla 12-02-10
REGISTERED CIVIL ENGINEER DATE

3-7-11
PLANS APPROVAL DATE

REGISTERED PROFESSIONAL ENGINEER Leon Valla No. 45351 Exp. 09-30-12 CIVIL STATE OF CALIFORNIA

The State of California or its officers or agents shall not be responsible for the accuracy or completeness of electronic copies of this plan sheet.

INDEX TO PLANS

SHEET NO.	TITLE
1	GENERAL PLAN
2	INDEX TO PLANS
3	ABUTMENT DETAILS NO. 1
4	ABUTMENT DETAILS NO. 2
5	ABUTMENT DETAILS NO. 3
6	BENT DETAILS NO. 1
7	BENT DETAILS NO. 2
8	BENT DETAILS NO. 3
9	BENT DETAILS NO. 4
10	COMPOSITE COLUMN CASING
11	COMPOSITE COLUMN CASING DETAILS
12	CONTINUITY PLATE DETAILS

STANDARD PLANS DATED MAY 2006

A10A	ACRONYMS AND ABBREVIATIONS (SHEET 1 OF 2)
A10B	ACRONYMS AND ABBREVIATIONS (SHEET 2 OF 2)
BO-1	BRIDGE DETAILS
BO-3	BRIDGE DETAILS

STANDARD PLAN SHEET NO.

DETAIL NO.

GENERAL NOTES
LOAD AND RESISTANCE FACTOR DESIGN

DESIGN: AASHTO LRFD Bridge Design Specifications, 4th Edition with California Amendments.

SEISMIC DESIGN: Caltrans Seismic Design Criteria (SDC) Version 1.4 June 2006

SEISMIC LOADING: See "SITE SPECIFIC ARS CURVE"

REINFORCED CONCRETE:
f_y = 60 ksi
f'_c = 4.0 ksi unless otherwise noted
f'_c = 5.0 ksi for all Catcher Beams only

STEEL BARS AND PLATE:
$f_{y_{min}}$ = 55 ksi for all plates 1" thick and less
$f_{y_{min}}$ = 50 ksi for all plates greater than 1" thick

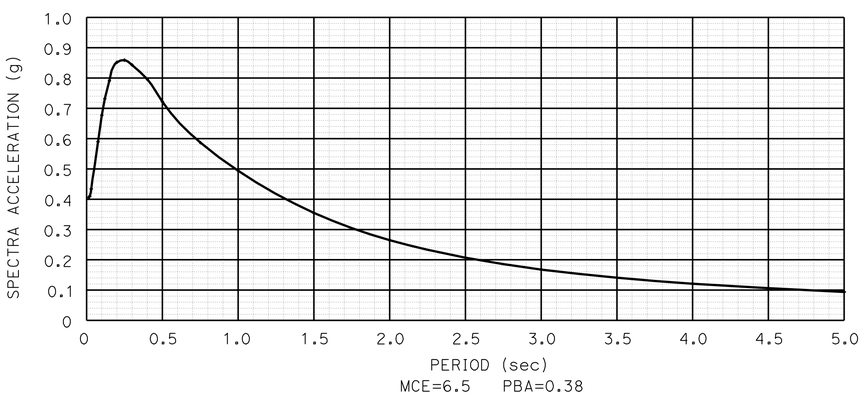

ACCELERATION RESPONSE SPECTRA (WITH 5% DAMPING)

SITE SPECIFIC ARS CURVE

No Scale

	BY	CHECKED
DESIGN	L. Valla	P. Mak
DETAILS	F. Mendoza	L. Valla
QUANTITIES	P. Mak	J. Klieby

STATE OF CALIFORNIA
DEPARTMENT OF TRANSPORTATION

DIVISION OF ENGINEERING SERVICES
STRUCTURE DESIGN
DESIGN BRANCH 12

BRIDGE NO. 54-0391
POST MILE 124.2

RASOR ROAD OC (SEISMIC RETROFIT)
INDEX TO PLANS

STRUCTURES DESIGN DETAIL SHEET (ENGLISH) (REV. 10/25/05)

ORIGINAL SCALE IN INCHES FOR REDUCED PLANS 0 1 2 3

CU 08
EA 0G4801

DISREGARD PRINTS BEARING EARLIER REVISION DATES

REVISION DATES: 10-14-10 11-02-10 12-02-10

SHEET 2 OF 12

FILE => 54-0391-a-itp.dgn

USERNAME => trstrk DATE PLOTTED => 08-MAR-2011 TIME PLOTTED => 11:19

DIST	COUNTY	ROUTE	POST MILES TOTAL PROJECT	SHEET No	TOTAL SHEETS
08	SBd	15	R111.6,R120.4, R124.2	45	54

REGISTERED CIVIL ENGINEER 12-02-10 DATE

3-7-11
PLANS APPROVAL DATE

The State of California or its officers or agents shall not be responsible for the accuracy or completeness of electronic copies of this plan sheet.

REGISTERED PROFESSIONAL ENGINEER Leon Valla No. 45351 Exp. 09-30-12 CIVIL STATE OF CALIFORNIA

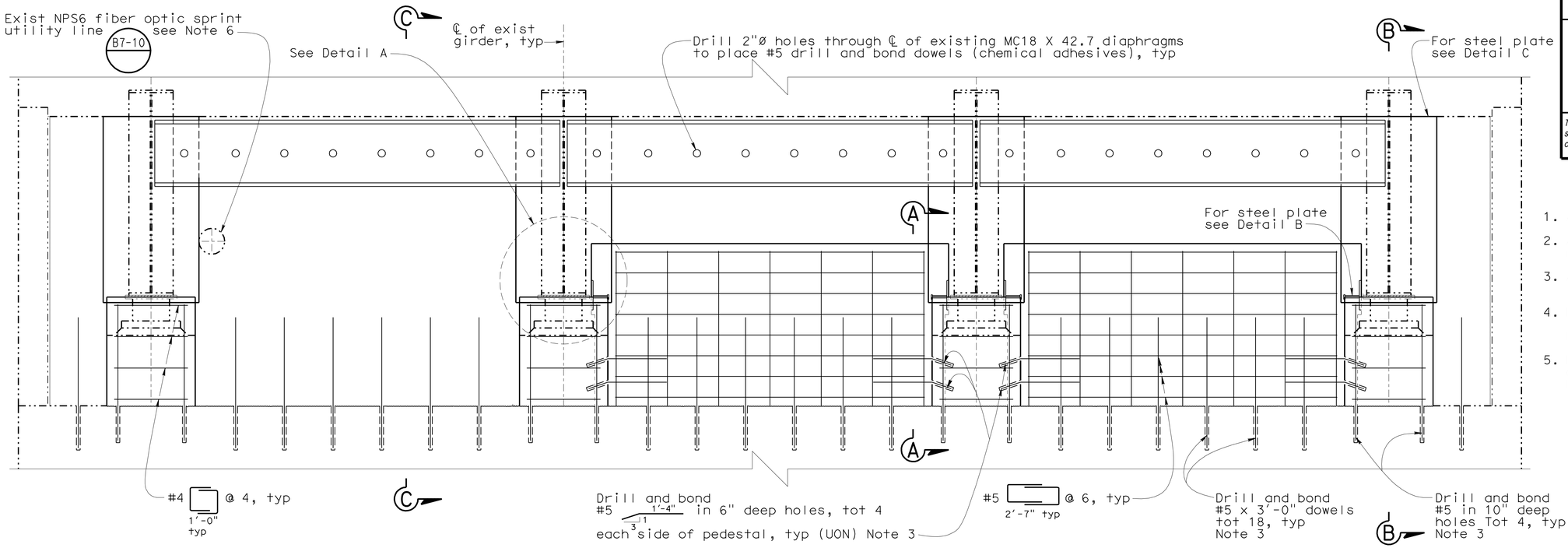

ELEVATION

3/4"=1'-0"

Note 1 & 2

NOTES:

1. Abutment 1 shown, abutment 5 similar.
2. All new and existing reinforcement not shown for clarity.
3. All existing reinforcement must be left undamaged.
4. For "Section A-A", "Section B-B" and "Section C-C", see "Abutment Details No. 2" sheet.
5. For "Detail A", "Detail B", "Detail C" and "Detail D", see "Abutment Details No. 3" sheet.

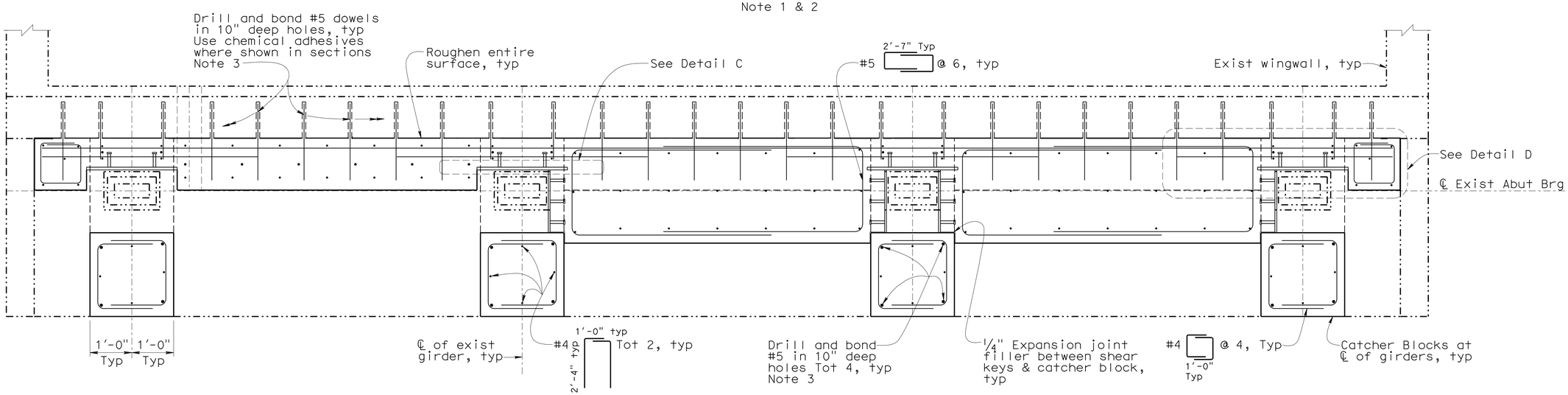

PLAN

3/4"=1'-0"

Note 1 & 2

NOTE:
THE CONTRACTOR SHALL VERIFY ALL CONTROLLING FIELD DIMENSIONS BEFORE ORDERING OR FABRICATING ANY MATERIAL.

	BY	CHECKED
DESIGN	Paul Mak	Leon Valla
DETAILS	Ton Doan	Leon Valla/Paul Mak
QUANTITIES	Paul Mak	Jeff Klieby

STATE OF CALIFORNIA
DEPARTMENT OF TRANSPORTATION

DIVISION OF ENGINEERING SERVICES
STRUCTURE DESIGN
DESIGN BRANCH 12

BRIDGE NO. 54-0391
POST MILE 124.2

RASOR ROAD OC (SEISMIC RETROFIT)
ABUTMENT DETAILS NO. 1

STRUCTURES DESIGN DETAIL SHEET (ENGLISH) (REV. 10/25/05)

ORIGINAL SCALE IN INCHES FOR REDUCED PLANS 0 1 2 3

CU 08
EA 0G4801

DISREGARD PRINTS BEARING EARLIER REVISION DATES

REVISION DATES: 08-26-10 09-08-10 09-13-10 10-07-10 10-14-10 10-18-10 11-04-10 11-08-10 11-12-10 12-02-10

SHEET 3 OF 12

FILE => 54-0391-f-abut-dt01.dgn

USERNAME => trsttrk DATE PLOTTED => 08-MAR-2011 TIME PLOTTED => 11:19

DIST	COUNTY	ROUTE	POST MILES TOTAL PROJECT	SHEET No	TOTAL SHEETS
08	SBd	15	R111.6,R120.4, R124.2	46	54

REGISTERED CIVIL ENGINEER 12-02-10 DATE

3-7-11
PLANS APPROVAL DATE

REGISTERED PROFESSIONAL ENGINEER Leon Valla No. 45351 Exp. 09-30-12 CIVIL STATE OF CALIFORNIA

The State of California or its officers or agents shall not be responsible for the accuracy or completeness of electronic copies of this plan sheet.

NOTES:

1. All existing reinforcement must be left undamaged.
2. Not all existing reinforcement shown for clarity.

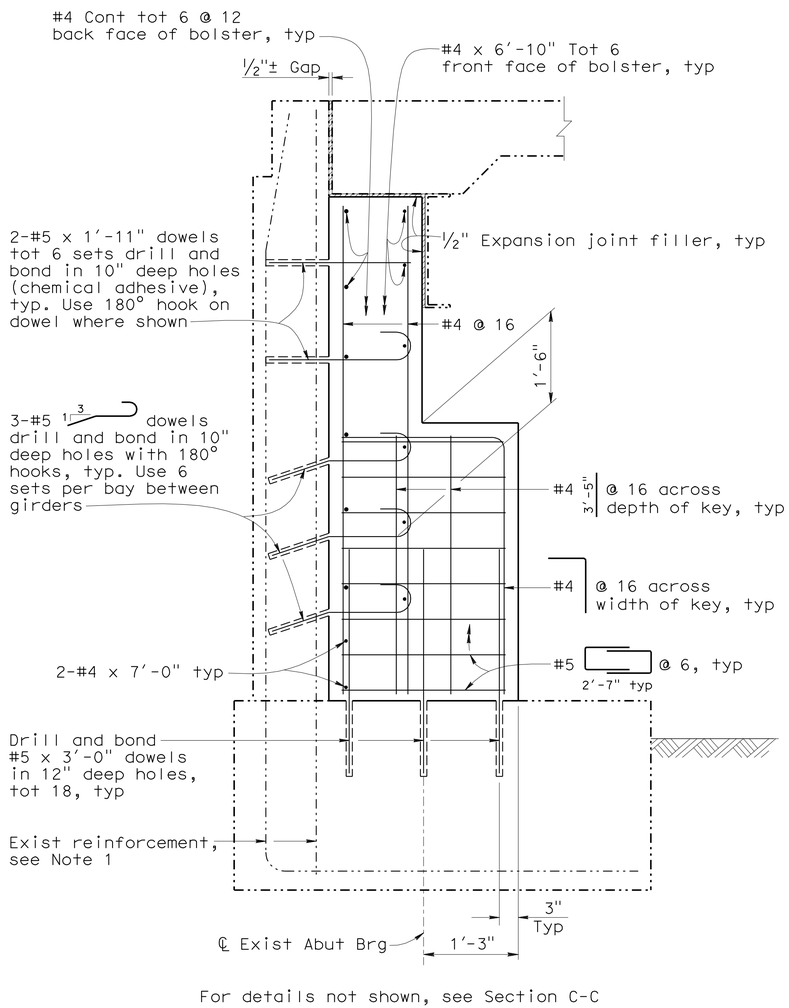

For details not shown, see Section C-C

SECTION A-A

1"=1'-0"

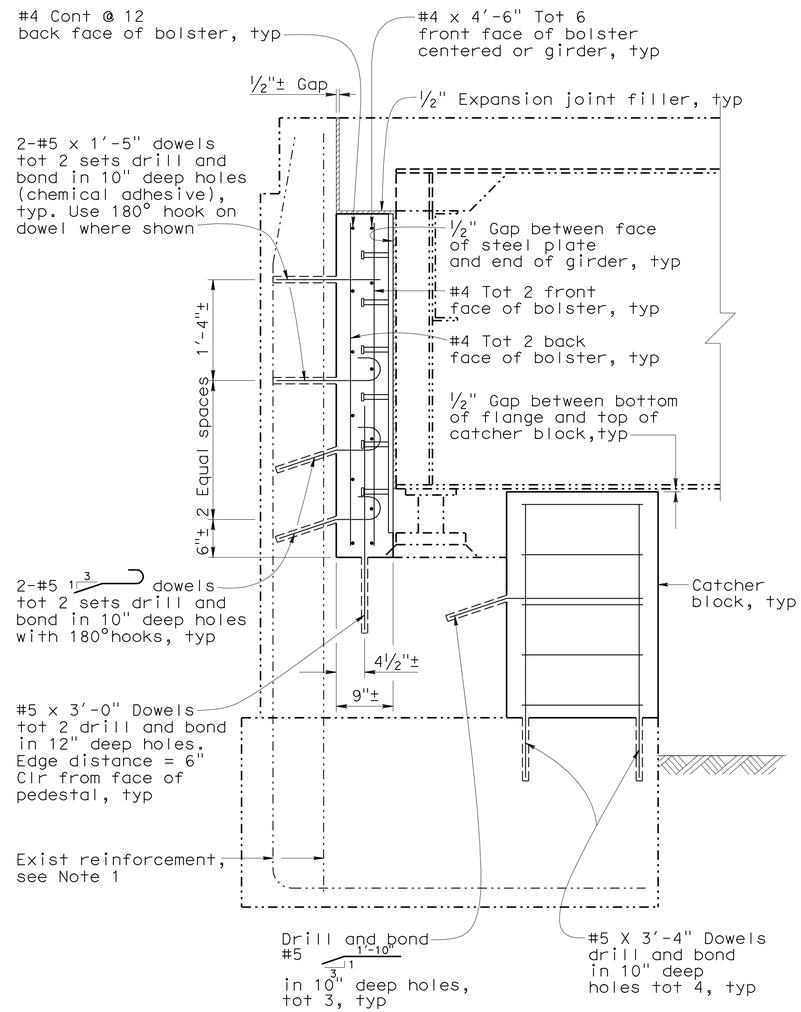

SECTION B-B

1"=1'-0"

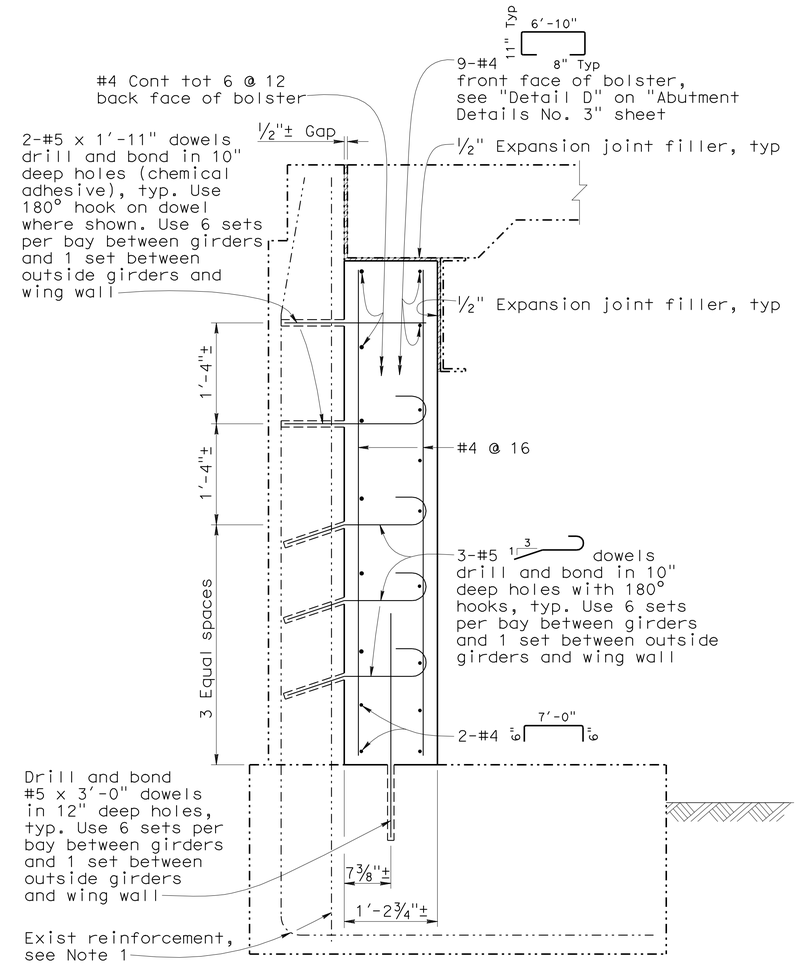

SECTION C-C

1"=1'-0"

NOTE:
THE CONTRACTOR SHALL VERIFY ALL CONTROLLING FIELD DIMENSIONS BEFORE ORDERING OR FABRICATING ANY MATERIAL.

	BY	CHECKED
DESIGN	Paul Mak	Leon Valla
DETAILS	Ton Doan	Leon Valla/Paul Mak
QUANTITIES	Paul Mak	Jeff Klieby

STATE OF CALIFORNIA
DEPARTMENT OF TRANSPORTATION

DIVISION OF ENGINEERING SERVICES
STRUCTURE DESIGN
DESIGN BRANCH 12

BRIDGE NO. 54-0391
POST MILE 124.2

RASOR ROAD OC (SEISMIC RETROFIT)
ABUTMENT DETAILS NO. 2

STRUCTURES DESIGN DETAIL SHEET (ENGLISH) (REV. 10/25/05)

ORIGINAL SCALE IN INCHES FOR REDUCED PLANS 0 1 2 3

CU 08
EA 0G4801

DISREGARD PRINTS BEARING EARLIER REVISION DATES

REVISION DATES: 10-12-10 10-14-10 10-18-10 11-09-10 11-12-10 12-02-10

SHEET 4 OF 12

FILE => 54-0391-f-abut-dt02.dgn

DATE PLOTTED => 08-MAR-2011 TIME PLOTTED => 11:19
tresrk

DIST	COUNTY	ROUTE	POST MILES TOTAL PROJECT	SHEET No	TOTAL SHEETS
08	SBd	15	R111.6,R120.4, R124.2	47	54

REGISTERED CIVIL ENGINEER 12-02-10 DATE

3-7-11
PLANS APPROVAL DATE

REGISTERED PROFESSIONAL ENGINEER Leon Valla No. 45351 Exp. 09-30-12 CIVIL STATE OF CALIFORNIA

The State of California or its officers or agents shall not be responsible for the accuracy or completeness of electronic copies of this plan sheet.

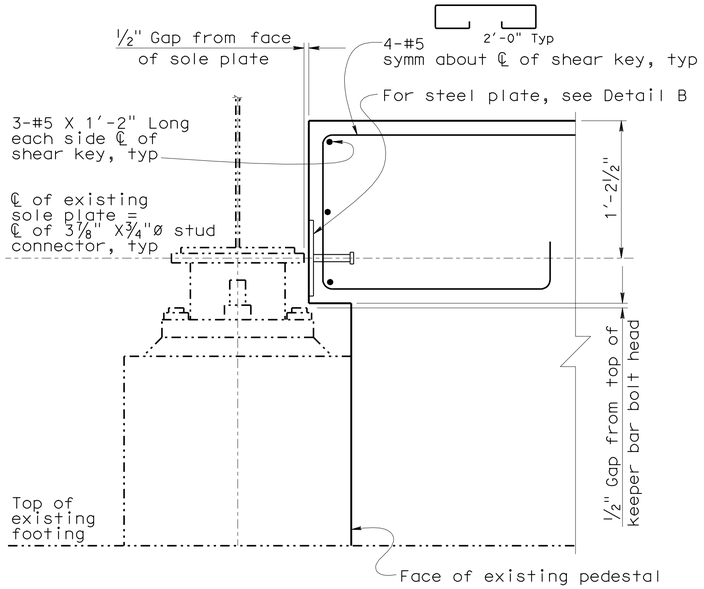

DETAIL A
1 1/2"=1'-0"

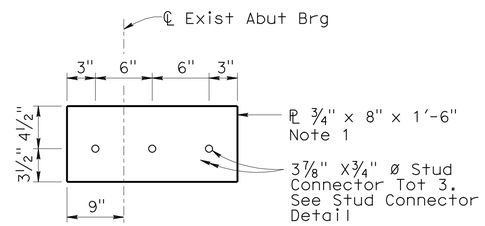

DETAIL B
1 1/2"=1'-0"

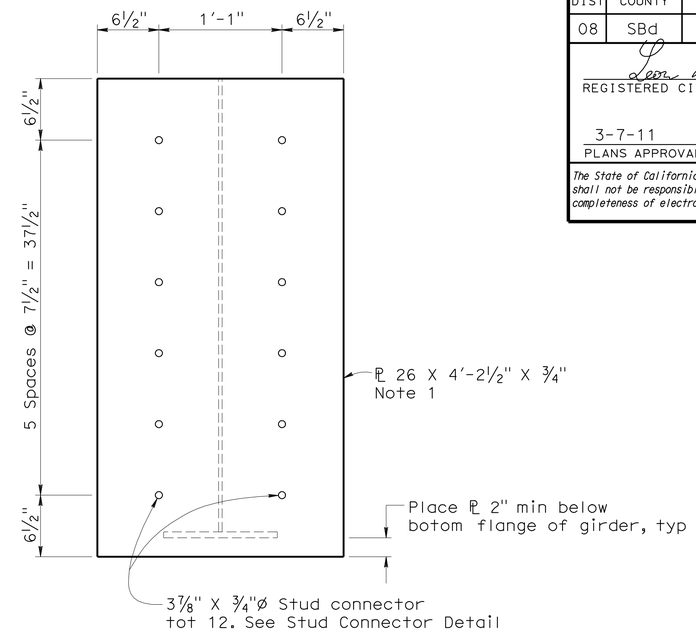

DETAIL C
1 1/2"=1'-0"

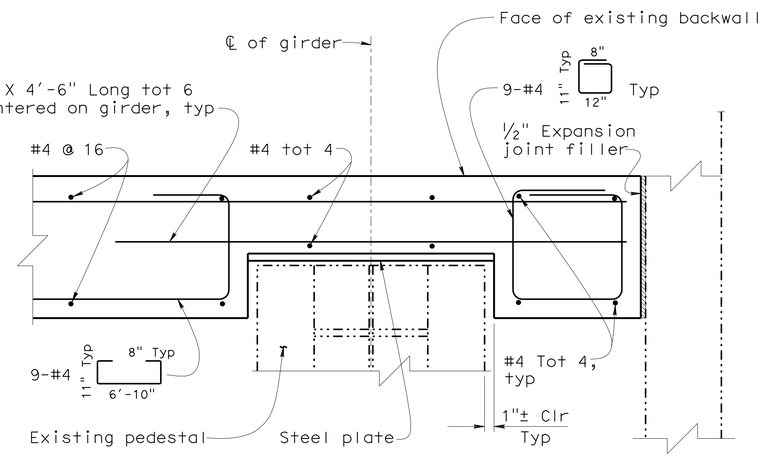

NOTE: Existing abutment and all reinforcement not shown for clarity

DETAIL D
1 1/2"=1'-0"

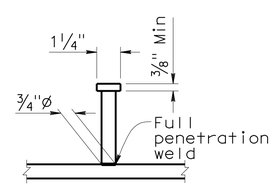

STUD CONNECTOR DETAIL
3"=1'-0"
Note 1

NOTE:

1. Galvanize assembly after fabrication.

NOTE:
THE CONTRACTOR SHALL VERIFY ALL CONTROLLING FIELD DIMENSIONS BEFORE ORDERING OR FABRICATING ANY MATERIAL.

	BY	CHECKED
DESIGN	Paul Mak	Leon Valla
DETAILS	Ton Doan	Leon Valla/Paul Mak
QUANTITIES	Paul Mak	Jeff Klieby

STATE OF CALIFORNIA
DEPARTMENT OF TRANSPORTATION

DIVISION OF ENGINEERING SERVICES
STRUCTURE DESIGN
DESIGN BRANCH 12

BRIDGE NO. 54-0391
POST MILE 124.2

RASOR ROAD OC (SEISMIC RETROFIT)
ABUTMENT DETAILS NO. 3

STRUCTURES DESIGN DETAIL SHEET (ENGLISH) (REV. 10/25/05)

ORIGINAL SCALE IN INCHES FOR REDUCED PLANS 0 1 2 3

CU 08
EA 0G4801

DISREGARD PRINTS BEARING EARLIER REVISION DATES

REVISION DATES: 10-14-10 10-18-10 11-04-10 11-09-10 12-02-10

SHEET 5 OF 12

FILE => 54-0391-f-abut-dt03.dgn

USERNAME => trestrk DATE PLOTTED => 08-MAR-2011 TIME PLOTTED => 11:20

DIST	COUNTY	ROUTE	POST MILES TOTAL PROJECT	SHEET No	TOTAL SHEETS
08	SBd	15	R111.6,R120.4, R124.2	48	54

REGISTERED CIVIL ENGINEER — DATE 12-02-10

3-7-11
PLANS APPROVAL DATE

REGISTERED PROFESSIONAL ENGINEER — Leon Valla No. 45351 Exp. 09-30-12 CIVIL — STATE OF CALIFORNIA

The State of California or its officers or agents shall not be responsible for the accuracy or completeness of electronic copies of this plan sheet.

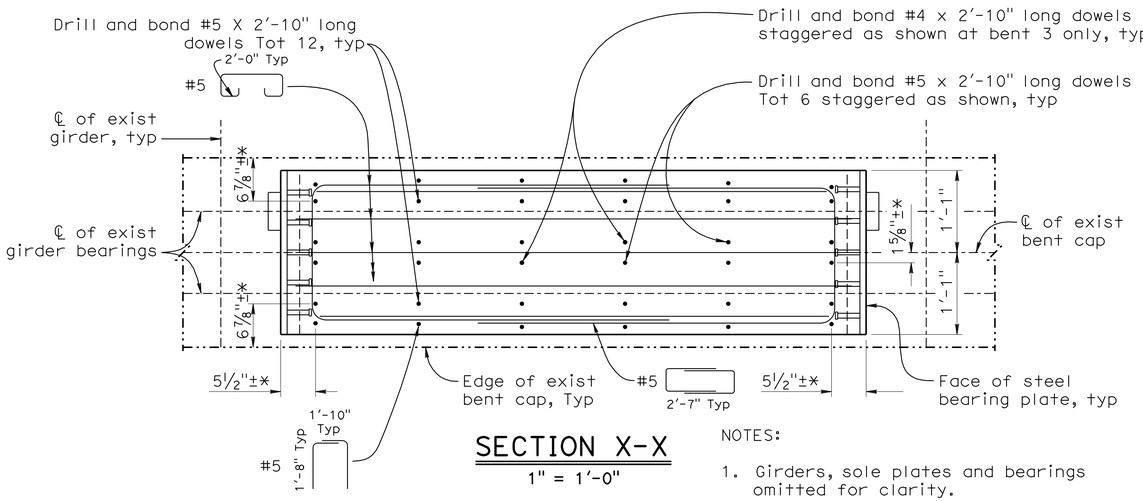

SECTION X-X

1" = 1'-0"

NOTES:

1. Girders, sole plates and bearings omitted for clarity.
2. * ℄ for location of #5 drill and bond dowel typical.

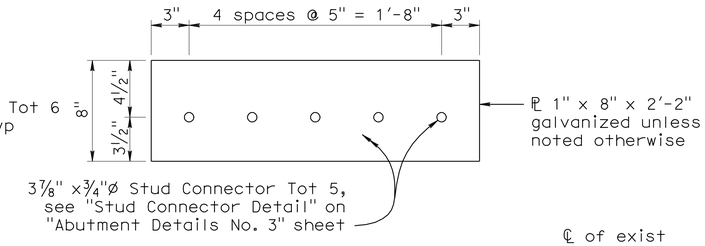

DETAIL B

No Scale

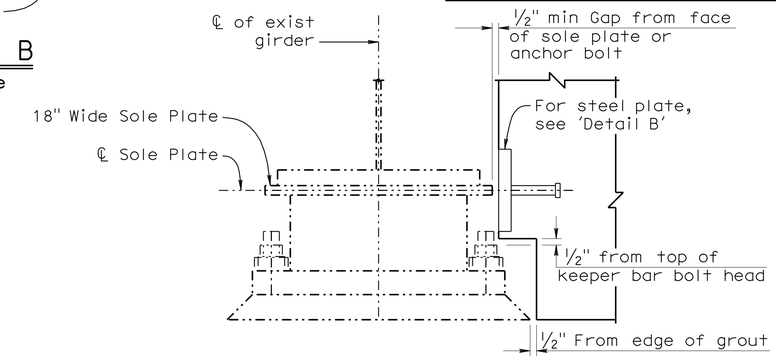

DETAIL C AT 18" WIDE SOLE PLATE

No Scale

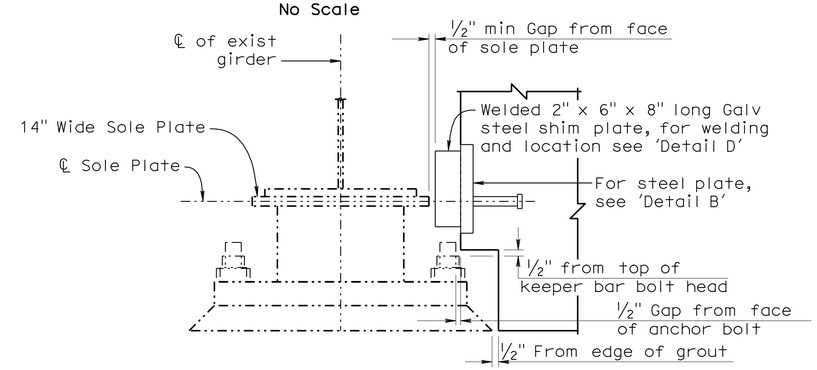

DETAIL C AT 14" WIDE SOLE PLATE

No Scale

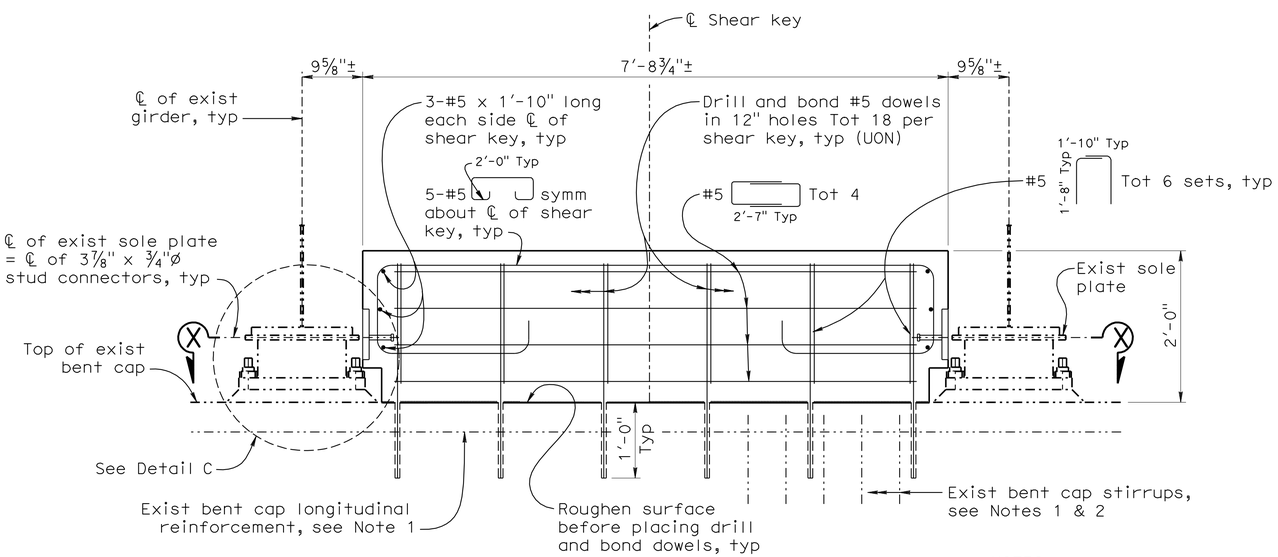

TRANSVERSE SHEAR KEY ELEVATION
(PER BAYS SHOWN ON GENERAL PLAN TYPICAL SECTION AT BENTS 2, 3, AND 4)

1" = 1'-0"

NOTES:

1. All existing reinforcement including bent cap stirrups to remain undamaged.
2. Not all bent cap stirrups shown for clarity.

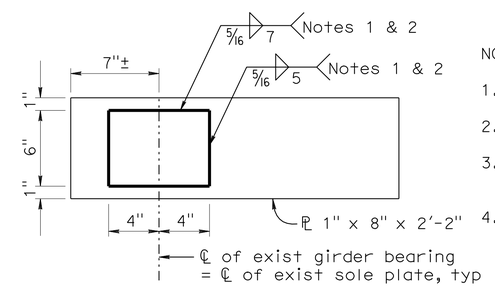

DETAIL D

No Scale

Note 3 & 4

NOTES:

1. No welding on return ends
2. Fy = 50 ksi
3. Galvanize assembly after fabrication
4. 3⅞" X¾"Ø Stud connectors omitted for clarity

NOTE:
THE CONTRACTOR SHALL VERIFY ALL CONTROLLING FIELD DIMENSIONS BEFORE ORDERING OR FABRICATING ANY MATERIAL.

	BY	CHECKED
DESIGN	L. Valla	P. Mak
DETAILS	F. Mendoza	L. Valla
QUANTITIES	P. Mak	J. Kileby

STATE OF CALIFORNIA
DEPARTMENT OF TRANSPORTATION

DIVISION OF ENGINEERING SERVICES
STRUCTURE DESIGN
DESIGN BRANCH 12

BRIDGE NO. 54-0391
POST MILE 124.2

RASOR ROAD OC (SEISMIC RETROFIT)
BENT DETAILS NO. 1

STRUCTURES DESIGN DETAIL SHEET (ENGLISH) (REV. 10/25/05)

ORIGINAL SCALE IN INCHES FOR REDUCED PLANS 0 1 2 3

CU 08
EA 0G4801

DISREGARD PRINTS BEARING EARLIER REVISION DATES

REVISION DATES: 08-18-10 09-08-10 09-13-10 09-14-10 10-13-10 11-02-10 11-09-10 11-12-10 12-02-10

SHEET 6 OF 12

FILE => 54-0391-h-bent-dt01.dgn

USERNAME => trstrk DATE PLOTTED => 08-MAR-2011 TIME PLOTTED => 11:20

DIST	COUNTY	ROUTE	POST MILES TOTAL PROJECT	SHEET No	TOTAL SHEETS
08	SBd	15	R111.6,R120.4, R124.2	49	54

REGISTERED CIVIL ENGINEER 12-02-10 DATE

3-7-11
PLANS APPROVAL DATE

REGISTERED PROFESSIONAL ENGINEER Leon Valla No. 45351 Exp. 09-30-12 CIVIL STATE OF CALIFORNIA

The State of California or its officers or agents shall not be responsible for the accuracy or completeness of electronic copies of this plan sheet.

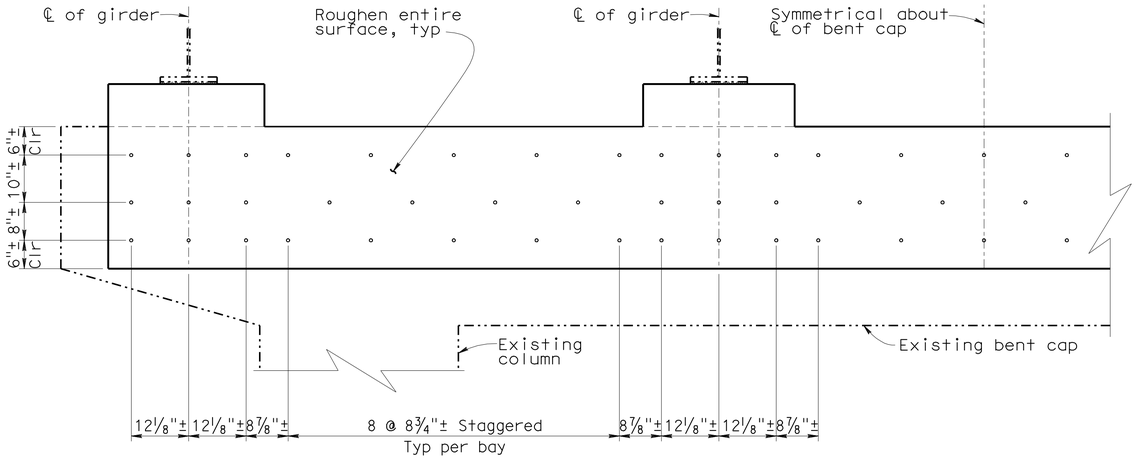

CATCHER BEAM #5 DRILL AND BOND DOWEL ELEVATION AT BENTS 2-4

3/4"=1'-0"

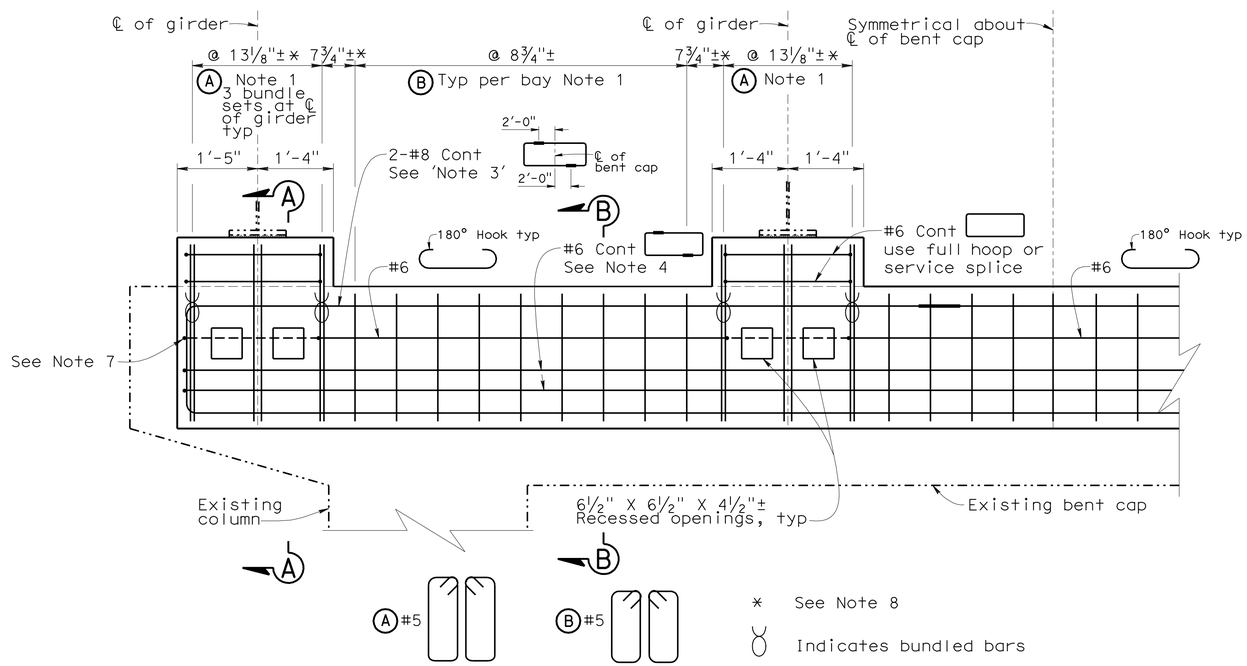

CATCHER BEAM STIRRUP AND MAIN REINFORCEMENT ELEVATION AT BENTS 2-4

3/4"=1'-0"

Not all reinforcement shown for clarity

NOTES:

1. Match all stirrup spacing with #5 drill and bond locations, typ. (Up or down hook, typ)
2. All reinforcing and/or service splicing not shown for clarity.
3. All splicing of #8 cont reinforcement must be done with service splice staggered about ℄ of bent cap.
4. Service splicing of #6 cont reinforcement at same staggered locations as #8 cont.
5. Shear keys and existing bearings not shown for clarity.
6. For "Section A-A" and "Section B-B" see "Bent Details No. 3" sheet.
7. See "Note 4" on "Bent Details No. 3" sheet.
8. Dimensions taken from ℄ of bundled stirrups, typ.
9. All existing longitudinal restrainers must be removed before catcher beams can be constructed.

NOTE:
THE CONTRACTOR SHALL VERIFY ALL CONTROLLING FIELD DIMENSIONS BEFORE ORDERING OR FABRICATING ANY MATERIAL.

	BY	CHECKED
DESIGN	Leon Valla	Paul Mak
DETAILS	Ton Doan	Paul Mak
QUANTITIES	Paul Mak	Jeff Klieby

STATE OF CALIFORNIA
DEPARTMENT OF TRANSPORTATION

DIVISION OF ENGINEERING SERVICES
STRUCTURE DESIGN
DESIGN BRANCH 12

BRIDGE NO. 54-0391
POST MILE 124.2

RASOR ROAD OC (SEISMIC RETROFIT)
BENT DETAILS NO. 2

STRUCTURES DESIGN DETAIL SHEET (ENGLISH) (REV. 10/25/05)

ORIGINAL SCALE IN INCHES FOR REDUCED PLANS 0 1 2 3

CU 08
EA 0G4801

DISREGARD PRINTS BEARING EARLIER REVISION DATES

REVISION DATES: 09-28-10 10-01-10 10-05-10 11-02-10 11-09-10 12-02-10

SHEET 7 OF 12

FILE => 54-0391-h-bent-dt02.dgn

USERNAME => ttistpk DATE PLOTTED => 08-MAR-2011 TIME PLOTTED => 11:20

DIST	COUNTY	ROUTE	POST MILES TOTAL PROJECT	SHEET No	TOTAL SHEETS
08	SBd	15	R111.6,R120.4, R124.2	50	54

Leon Valla 12-02-10
REGISTERED CIVIL ENGINEER DATE

3-7-11
PLANS APPROVAL DATE

REGISTERED PROFESSIONAL ENGINEER Leon Valla No. 45351 Exp. 09-30-12 CIVIL STATE OF CALIFORNIA

The State of California or its officers or agents shall not be responsible for the accuracy or completeness of electronic copies of this plan sheet.

NOTES:

1. For details not shown see "Continuity Plate Details" sheet.
2. All existing reinforcement including bent cap stirrups to remain undamaged.
3. All washers on 1¼"Ø high strength rods to bearing plates to be 2 inches minimum diameter. All stirrups reinforcement, and drill and bond dowels to be 2" clear from the edge of 6½" X 6½" X 4½"± recess openings except #4 grillage is 1" clr, typ. 1¼"Ø high strength rod connections to be recessed flush with out-side edge of catcher beams, typ.
4. Reinforcement to hook and continue around ends of catcher beams like #6 cont in "Section C-C" on "Bent Details No. 4" sheet. Stop reinforcement 2" clr of 1¼"Ø high strength rod recess openings, typ.
5. For "Section C-C", "Section D-D" and "Section E-E", see "Bent Details No. 4" sheet.
6. Reinforcement is symmectrical around ℄ of existing bent cap.

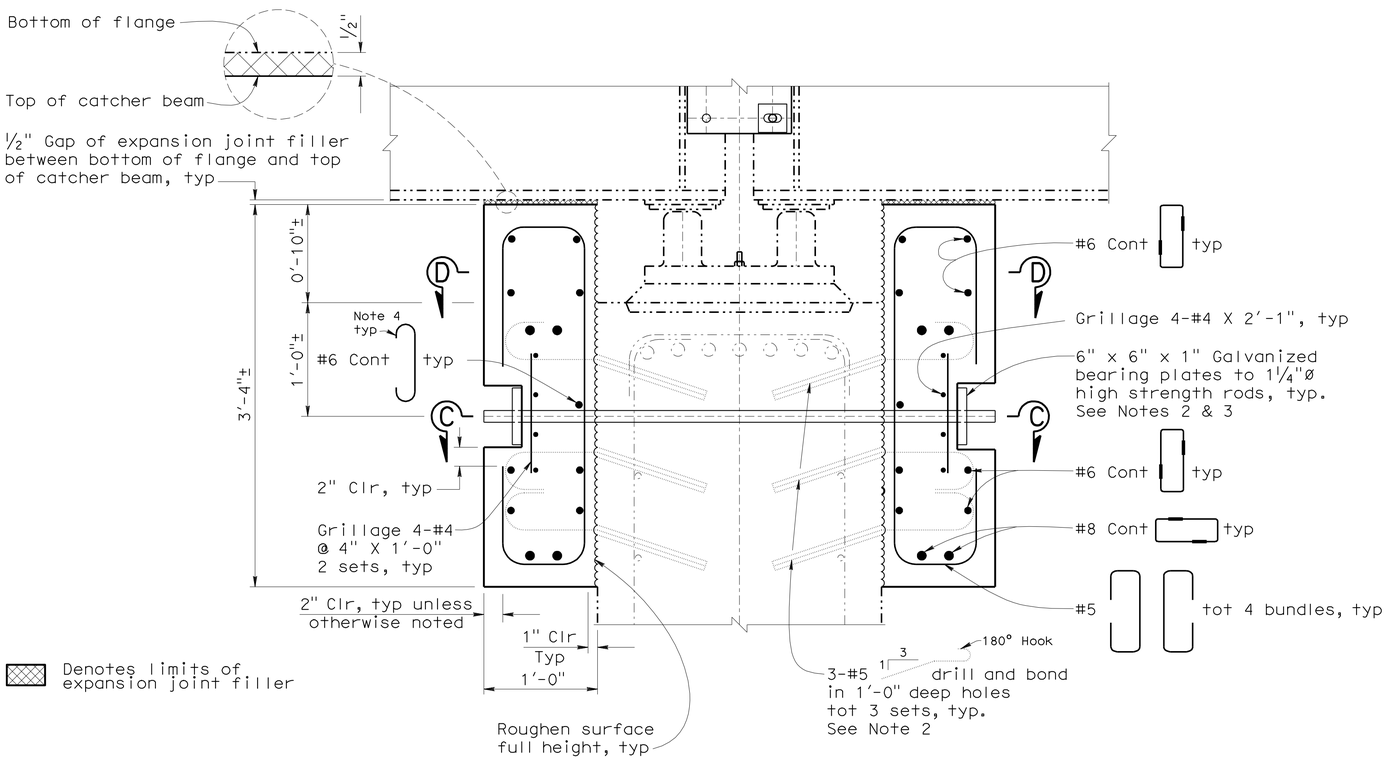

SECTION A-A

1 1/2"=1'-0"

See Note 6

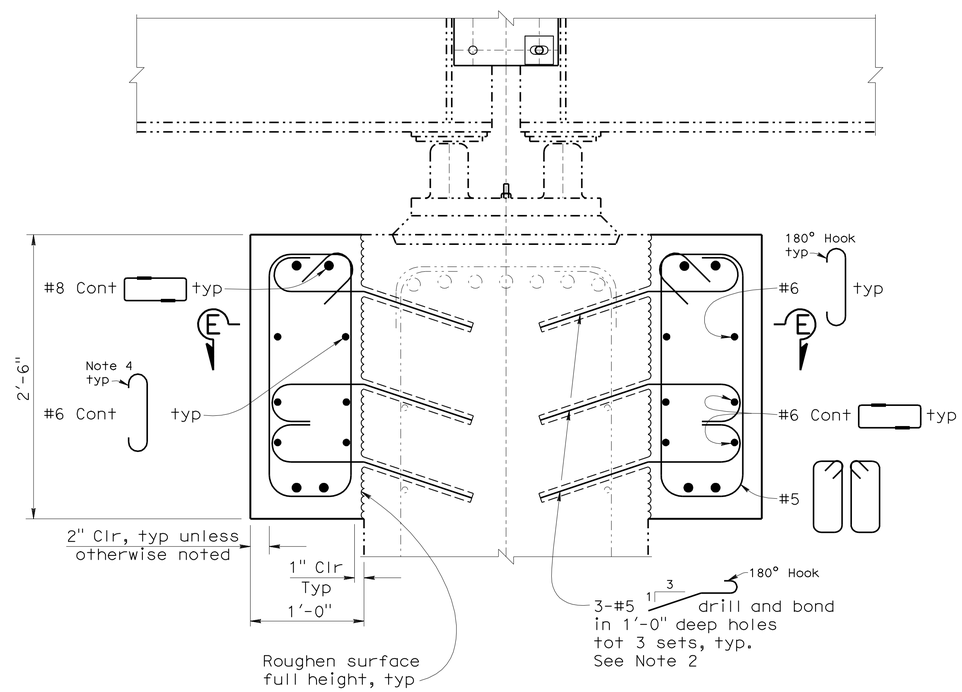

SECTION B-B

1 1/2"=1'-0"

See Note 6

NOTE:
THE CONTRACTOR SHALL VERIFY ALL CONTROLLING FIELD DIMENSIONS BEFORE ORDERING OR FABRICATING ANY MATERIAL.

	BY	CHECKED
DESIGN	Leon Valla	Paul Mak
DETAILS	Ton Doan	Paul Mak
QUANTITIES	Paul Mak	Jeff Klieby

STATE OF CALIFORNIA
DEPARTMENT OF TRANSPORTATION

DIVISION OF ENGINEERING SERVICES
STRUCTURE DESIGN
DESIGN BRANCH 12

BRIDGE NO. 54-0391
POST MILE 124.2

RASOR ROAD OC (SEISMIC RETROFIT)
BENT DETAILS NO. 3

STRUCTURES DESIGN DETAIL SHEET (ENGLISH) (REV. 10/25/05)

ORIGINAL SCALE IN INCHES FOR REDUCED PLANS 0 1 2 3

CU 08
EA 0G4801

DISREGARD PRINTS BEARING EARLIER REVISION DATES

REVISION DATES: 09-16-10 10-01-10 10-05-10 11-02-10 11-10-10 12-02-10

SHEET 8 OF 12

FILE => 54-0391-h-bent-dt03.dgn

USERNAME => tr6ttk DATE PLOTTED => 08-MAR-2011 TIME PLOTTED => 11:20

DIST	COUNTY	ROUTE	POST MILES TOTAL PROJECT	SHEET No	TOTAL SHEETS
08	SBd	15	R111.6,R120.4, R124.2	51	54

REGISTERED CIVIL ENGINEER 12-02-10 DATE

3-7-11
PLANS APPROVAL DATE

REGISTERED PROFESSIONAL ENGINEER Leon Valla No. 45351 Exp. 09-30-12 CIVIL STATE OF CALIFORNIA

The State of California or its officers or agents shall not be responsible for the accuracy or completeness of electronic copies of this plan sheet.

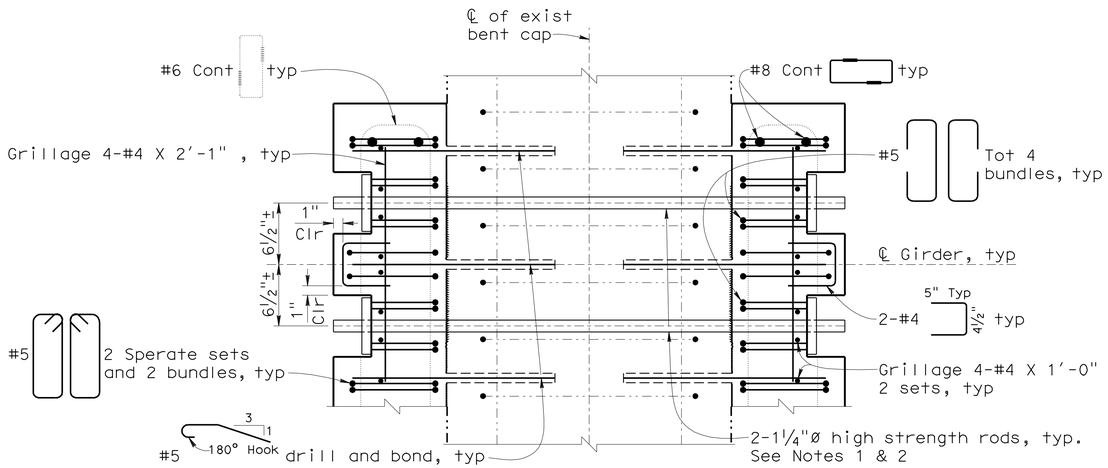

SECTION C-C

1 1/2"=1'-0"

At ℄ of 6½" X 6½" recess opening

See Note 3

NOTES:

1. All existing reinforcement including bent cap stirrups to remain undamaged.
2. All 1¼"ø high strength rods to be tightened to an ultimate load of 80 kips. Core in 1½"ø holes and pressure grout, typ.
3. Reinforcement is symmectrical around ℄ of existing bent cap.
4. See "Note 4" on "Bent Details No. 3" sheet.

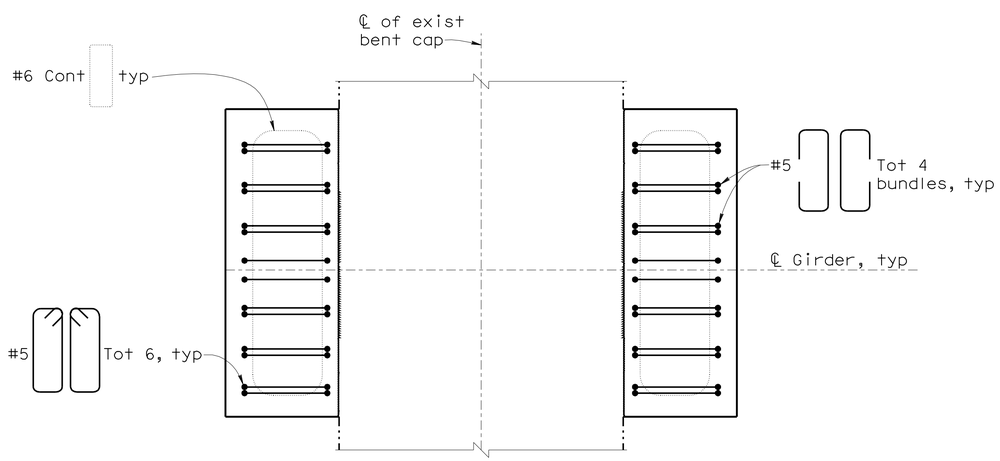

SECTION D-D

1 1/2"=1'-0"

Above top of existing bent cap

See Note 3

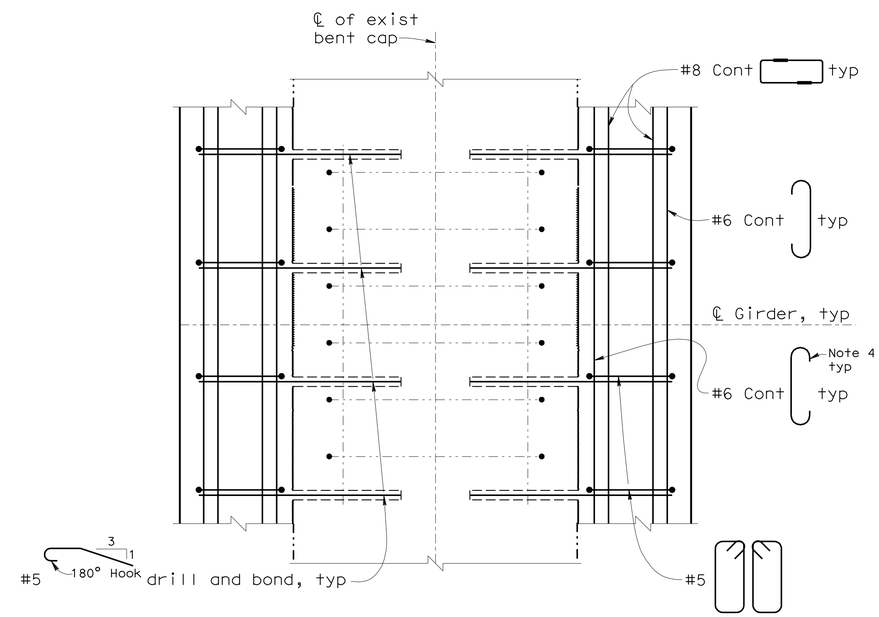

SECTION E-E

1 1/2"=1'-0"

See Note 3

NOTE:
THE CONTRACTOR SHALL VERIFY ALL CONTROLLING FIELD DIMENSIONS BEFORE ORDERING OR FABRICATING ANY MATERIAL.

	BY	CHECKED
DESIGN	Leon Valla	Paul Mak
DETAILS	Ton Doan	Paul Mak
QUANTITIES	Paul Mak	Jeff Klieby

STATE OF CALIFORNIA
DEPARTMENT OF TRANSPORTATION

DIVISION OF ENGINEERING SERVICES
STRUCTURE DESIGN
DESIGN BRANCH 12

BRIDGE NO. 54-0391
POST MILE 124.2

RASOR ROAD OC (SEISMIC RETROFIT)
BENT DETAILS NO. 4

STRUCTURES DESIGN DETAIL SHEET (ENGLISH) (REV. 10/25/05)

ORIGINAL SCALE IN INCHES FOR REDUCED PLANS 0 1 2 3

CU 08
EA 0G4801

DISREGARD PRINTS BEARING EARLIER REVISION DATES

REVISION DATES: 09-24-10 10-04-10 10-08-10 11-02-10 12-02-10

SHEET 9 OF 12

FILE => 54-0391-h-bent-dt04.dgn

USERNAME => tfstrk DATE PLOTTED => 08-MAR-2011 TIME PLOTTED => 11:20

DIST.	COUNTY	ROUTE	KILOMETER POST TOTAL PROJECT	SHEET NO.	TOTAL SHEETS
08	SBd	15	R111.6,R120.4, R124.2	52	54

REGISTERED ENGINEER - CIVIL 12-02-10

REGISTERED PROFESSIONAL ENGINEER Leon Valla No. 45351 Exp. 09-30-12 CIVIL STATE OF CALIFORNIA

3-7-11
PLANS APPROVAL DATE

The State of California or its officers or agents shall not be responsible for the accuracy or completeness of electronic copies of this plan sheet.

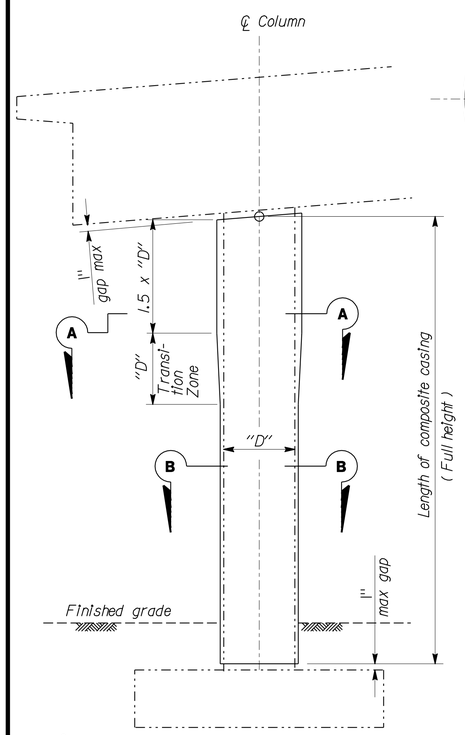

◇2 COLUMN RETROFIT

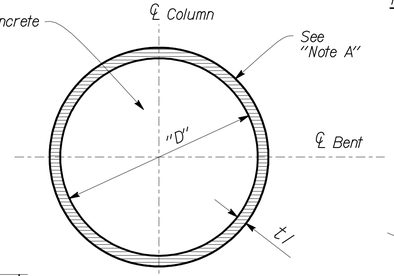

SECTION A-A

Note A:
Epoxy Resin-Carbon Composite

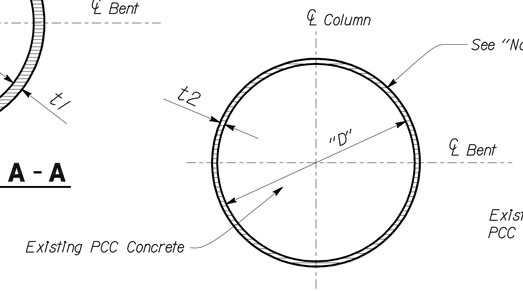

SECTION B-B

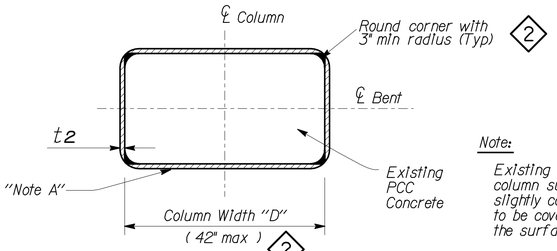

◇2 **SECTION B-B**

Note:
Existing rectangular column concrete column surfaces shall be straight or slightly convex outward at all areas to be covered by jackets; otherwise, the surface shall be filled with epoxy.

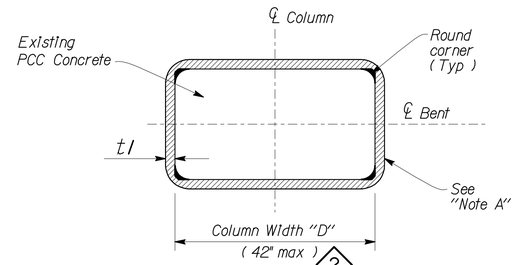

◇2 **SECTION A-A**

◇1

~~E-Glass Notes:~~

1. ~~Each composite section shall be wrapped using continuous E-glass fabric not less than 610 mm in height. All wraps of continuous E-glass weave shall be terminated a minimum of 305 mm past the starting point of the initial wrap. Subsequent wraps shall be started (butted) at the ending point of the last wrap.~~
2. ~~All cut edges shall be sealed with epoxy.~~

Carbon Notes: ◇2

1. Pre-preg carbon jacket shall be completely cured by elevated temperature.
2. Pre-preg carbon fiber spools shall contain continuous strands not less than 100 ft in length.

General Notes:

1. For hexagonal or octagonal columns use composite thickness specified in "Rectangular Column" table.
2. Remove any sharp corners to 1½" radius minimum.
3. All materials shall be protected from moisture.
4. Drainage opening reinforcement shall be of the same material used for the column casing
5. The casing thickness shall taper evenly the full length of the transition zone.
6. The composite casing shall adhere firmly to all surfaces of the existing column.

LEGEND

-·-·-·-·-	Indicates Existing Structure
———	Indicates New Construction
t1, t2	Denotes Minimum Thickness of Accumulated Dry E-Glass Wraps or completed Carbon Jacket thickness (excluding coatings)

◇1 **SYSTEM 1**
FIBER VOLUME = 35% min

E-GLASS		
COLUMN DIA	t1 (min)	t2 (min)
305	5	2.5
610	10	5
914	15	7
1219 max	20	10

E-GLASS RECTANGULAR COLUMN		
COLUMN WIDTH	t1 (min)	t2 (min)
305	7.6	3.8
610	15	7.6
914 max	22	11

◇2 **SYSTEM 2**
FIBER VOLUME = 50% min

CARBON ROUND COLUMN		
COLUMN DIA	t1 (min)	t2 (min)
12"	0.05"	0.05"
24"	0.08"	0.05"
36"	0.12"	0.06"
48 max	0.16"	0.08"

CARBON RECTANGULAR COLUMN		
COLUMN WIDTH	t1 (min)	t2 (min)
12"	0.06"	0.05"
24"	0.12"	0.06"
42" max	0.18"	0.09"

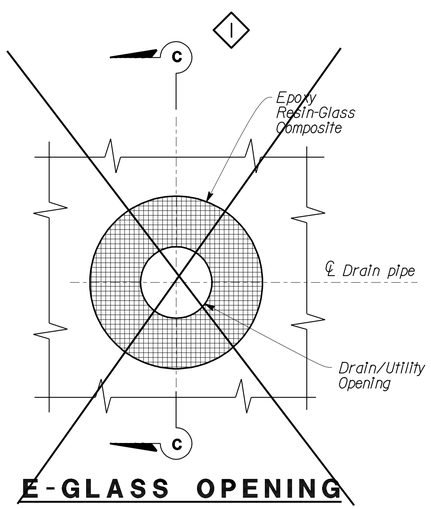

E-GLASS OPENING

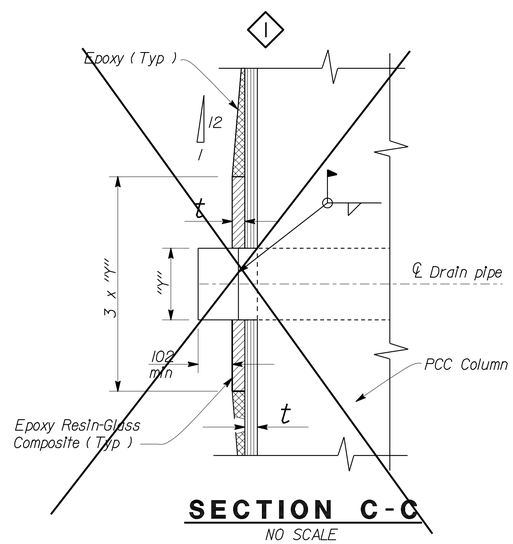

SECTION C-C
NO SCALE

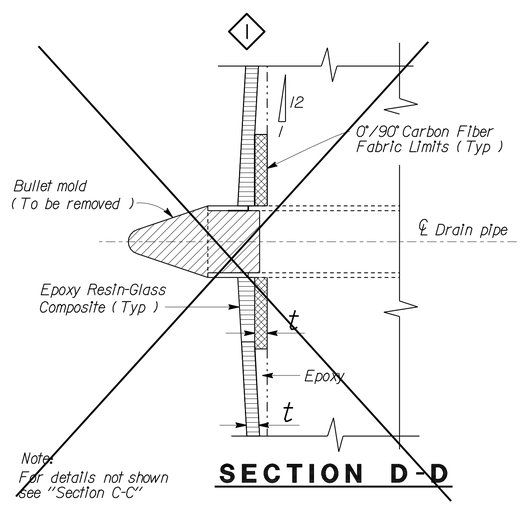

Note:
For details not shown See "Section C-C"

SECTION D-D

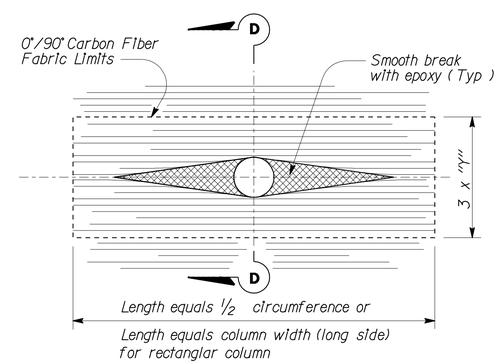

CARBON OPENING

NO SCALE
ALL DIMENSIONS ARE IN INCHES UNLESS OTHERWISE SHOWN

STANDARD DRAWING

RELEASE DATE	REVISED	DESIGN	BY PAT HIPLEY	CHECKED RAY ZELINSKI	RELEASED BY
FILE NO.	xs7-210	DETAILS	BY R. YEE	CHECKED PAT HIPLEY	
		SUBMITTED	BY RAY ZELINSKI	DRAWING DATE 4/96	OFFICE CHIEF

DS OSD 2147A (CADD 8/95)

◇1 Delete notes and details
◇2 Revise details

STATE OF CALIFORNIA
DEPARTMENT OF TRANSPORTATION

DIVISION OF ENGINEERING SERVICES

CU: 08
EA: 0G4801

BRIDGE NO. 54-0391
POST MILE 124.2

RASOR ROAD OC (SEISMIC RETROFIT)
COMPOSITE COLUMN CASING

DISREGARD PRINTS BEARING EARLIER REVISION DATES → 07-06-10 | 10-13-10 | 12-02-10

REVISION DATES (PRELIMINARY STAGE ONLY) | SHEET 10 | OF 12

USERNAME => trstrk

DATE PLOTTED => 08-MAR-2011 TIME PLOTTED => 11:20

54-0391-j-ccdt01.d

DIST	COUNTY	ROUTE	POST MILES TOTAL PROJECT	SHEET No	TOTAL SHEETS
08	SBd	15	R111.6,R120.4, R124.2	53	54

REGISTERED CIVIL ENGINEER 12-02-10 DATE

3-7-11
PLANS APPROVAL DATE

REGISTERED PROFESSIONAL ENGINEER Leon Valla No. 45351 Exp. 09-30-12 CIVIL STATE OF CALIFORNIA

The State of California or its officers or agents shall not be responsible for the accuracy or completeness of electronic copies of this plan sheet.

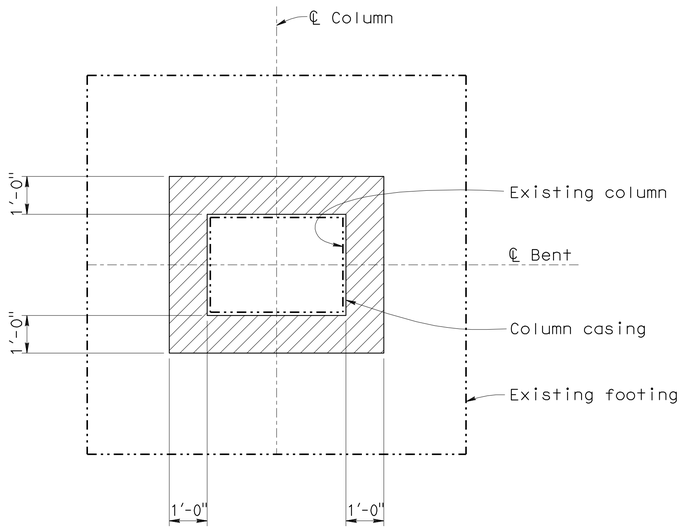

PLAN
1/2"=1'-0"

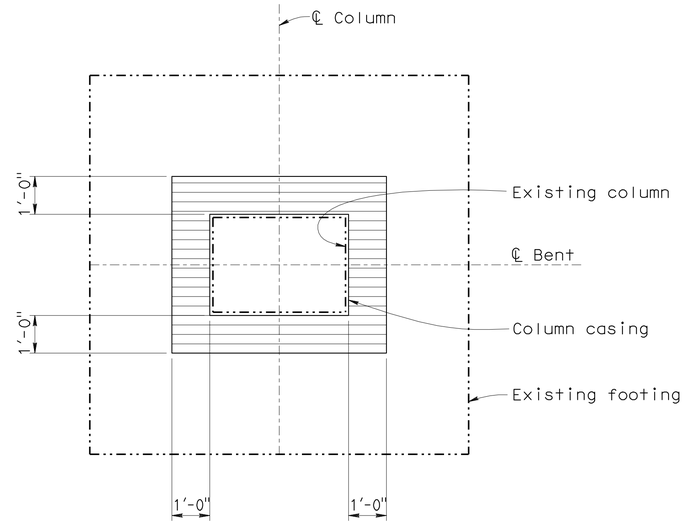

PLAN
1/2"=1'-0"

Legend:

Indicates limits of structure excavation (Bridge)

Indicates limits of structure back-fill (Bridge)

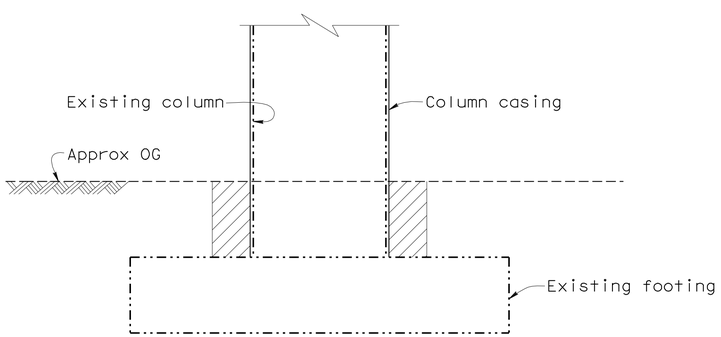

ELEVATION
1/2"=1'-0"

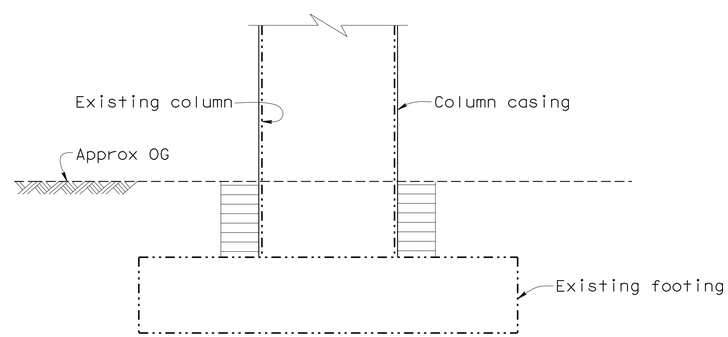

ELEVATION
1/2"=1'-0"

NOTE:
THE CONTRACTOR SHALL VERIFY ALL CONTROLLING FIELD DIMENSIONS BEFORE ORDERING OR FABRICATING ANY MATERIAL.

	BY	CHECKED
DESIGN	Leon Valla	Paul Mak
DETAILS	Ton Doan	Leon Valla/Paul Mak
QUANTITIES	P. Mak	J. Klieby

STATE OF CALIFORNIA
DEPARTMENT OF TRANSPORTATION

DIVISION OF ENGINEERING SERVICES
STRUCTURE DESIGN
DESIGN BRANCH 12

BRIDGE NO. 54-0391
POST MILE 124.2

RASOR ROAD OC (SEISMIC RETROFIT)
COMPOSITE COLUMN CASING DETAILS

STRUCTURES DESIGN DETAIL SHEET (ENGLISH) (REV. 10/25/05)

ORIGINAL SCALE IN INCHES FOR REDUCED PLANS 0 1 2 3

CU 08
EA 0G4801

DISREGARD PRINTS BEARING EARLIER REVISION DATES

REVISION DATES: ~~06-30-10~~ ~~10-13-10~~ 12-02-10

SHEET 11 OF 12

FILE => 54-0391-j-ccdt02.dgn

USERNAME => trstrk DATE PLOTTED => 08-MAR-2011 TIME PLOTTED => 11:21

DIST	COUNTY	ROUTE	POST MILES TOTAL PROJECT	SHEET No	TOTAL SHEETS
08	SBd	15	R111.6,R120.4, R124.2	54	54

REGISTERED CIVIL ENGINEER 12-02-10 DATE

3-7-11
PLANS APPROVAL DATE

REGISTERED PROFESSIONAL ENGINEER Leon Valla No. 45351 Exp. 09-30-12 CIVIL STATE OF CALIFORNIA

The State of California or its officers or agents shall not be responsible for the accuracy or completeness of electronic copies of this plan sheet.

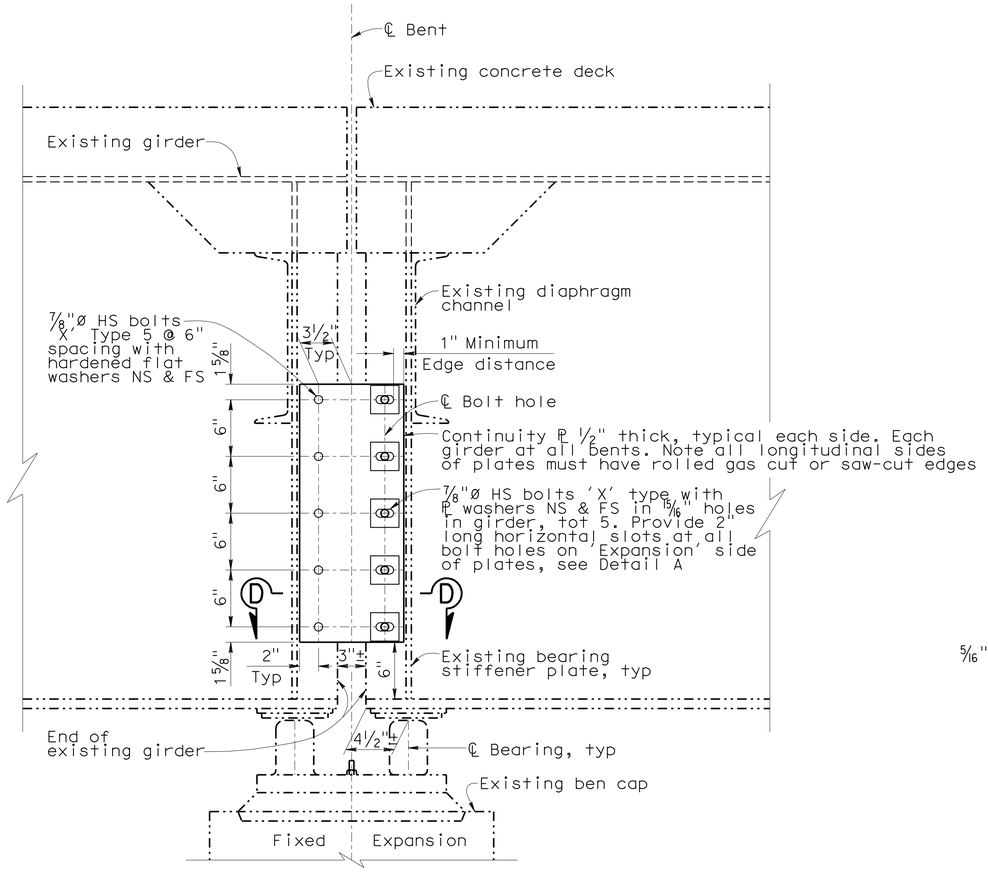

ELEVATION VIEW

1-1/2"=1'-0"

Notes 1 & 2

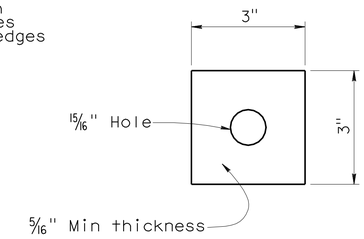

PLATE WASHER DETAIL

6"=1'-0"

NOTES:

1. All continuity plates must be installed first before existing longitudinal restrainers are removed.
2. Galvanize all parts after fabrication.

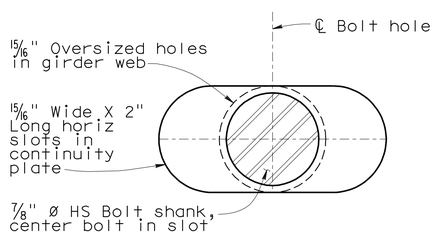

DETAIL A

NO SCALE

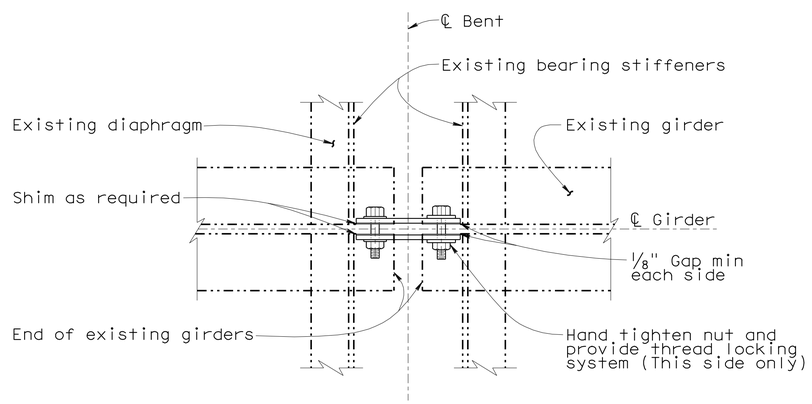

SECTION D-D

1-1/2"=1'-0"

NOTE:
THE CONTRACTOR SHALL VERIFY ALL CONTROLLING FIELD DIMENSIONS BEFORE ORDERING OR FABRICATING ANY MATERIAL.

	BY	CHECKED
DESIGN	Leon Valla	Paul Mak
DETAILS	Ton Doan	Leon Valla/Paul Mak
QUANTITIES	P. Mak	J. Klieby

STATE OF CALIFORNIA
DEPARTMENT OF TRANSPORTATION

DIVISION OF ENGINEERING SERVICES
STRUCTURE DESIGN
DESIGN BRANCH 12

BRIDGE NO. 54-0391
POST MILE 124.2

RASOR ROAD OC (SEISMIC RETROFIT)
CONTINUITY PLATE DETAILS

STRUCTURES DESIGN DETAIL SHEET (ENGLISH) (REV. 10/25/05)

ORIGINAL SCALE IN INCHES FOR REDUCED PLANS 0 1 2 3

CU 08
EA 0G4801

DISREGARD PRINTS BEARING EARLIER REVISION DATES

REVISION DATES: 06-25-10 06-28-10 08-24-10 10-13-10 11-18-10 11-12-10 12-02-10

SHEET 12 OF 12

FILE => 54-0391-u-miscdt01.dgn

USERNAME => FrstTk DATE PLOTTED => 08-MAR-2011 TIME PLOTTED => 11:21