Dist	COUNTY	ROUTE	POST MILES TOTAL PROJECT	SHEET No.	TOTAL SHEETS
08	SBd	247	1.8/9.6	112	196

12-16-13
REGISTERED CIVIL ENGINEER DATE

DAI HOANG
No. C64203
Exp 6-30-15
CIVIL
REGISTERED PROFESSIONAL ENGINEER
STATE OF CALIFORNIA

12-16-13
PLANS APPROVAL DATE

THE STATE OF CALIFORNIA OR ITS OFFICERS OR AGENTS SHALL NOT BE RESPONSIBLE FOR THE ACCURACY OR COMPLETENESS OF SCANNED COPIES OF THIS PLAN SHEET.

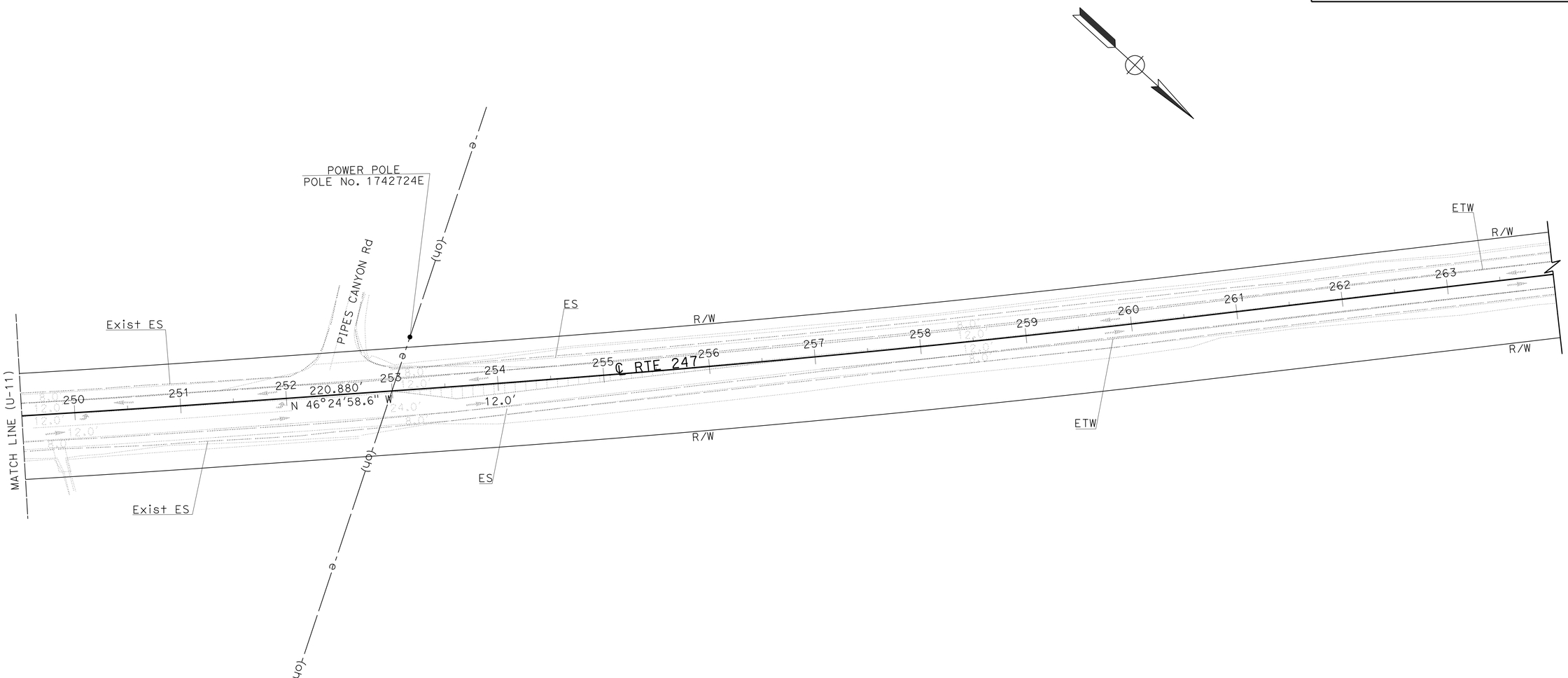

APPROVED FOR UTILITY INFORMATION ONLY

UTILITY PLAN

SCALE: 1" = 50' **U-12**

REVISED BY | DATE REVISED
DAI HOANG | SERGIO E. AVILA
CALCULATED-DESIGNED BY | CHECKED BY
FUNCTIONAL SUPERVISOR: SERGIO E. AVILA

STATE OF CALIFORNIA - DEPARTMENT OF TRANSPORTATION
Caltrans® PROJECT DEVELOPMENT

LAST REVISION | DATE PLOTTED => 20-DEC-2013
12-16-13 | TIME PLOTTED => 10:15

BORDER LAST REVISED 7/2/2010 | USERNAME => s110420 | DGN FILE => 0800000146ka012.dgn | RELATIVE BORDER SCALE IS IN INCHES 0 1 2 3 | UNIT 2237 | PROJECT NUMBER & PHASE 08000001461

Dist	COUNTY	ROUTE	POST MILES TOTAL PROJECT	SHEET No.	TOTAL SHEETS
08	SBd	247	1.8/9.6	113	196

12-16-13
REGISTERED CIVIL ENGINEER DATE

12-16-13
PLANS APPROVAL DATE

REGISTERED PROFESSIONAL ENGINEER
DAI HOANG
No. C64203
Exp 6-30-15
CIVIL
STATE OF CALIFORNIA

THE STATE OF CALIFORNIA OR ITS OFFICERS OR AGENTS SHALL NOT BE RESPONSIBLE FOR THE ACCURACY OR COMPLETENESS OF SCANNED COPIES OF THIS PLAN SHEET.

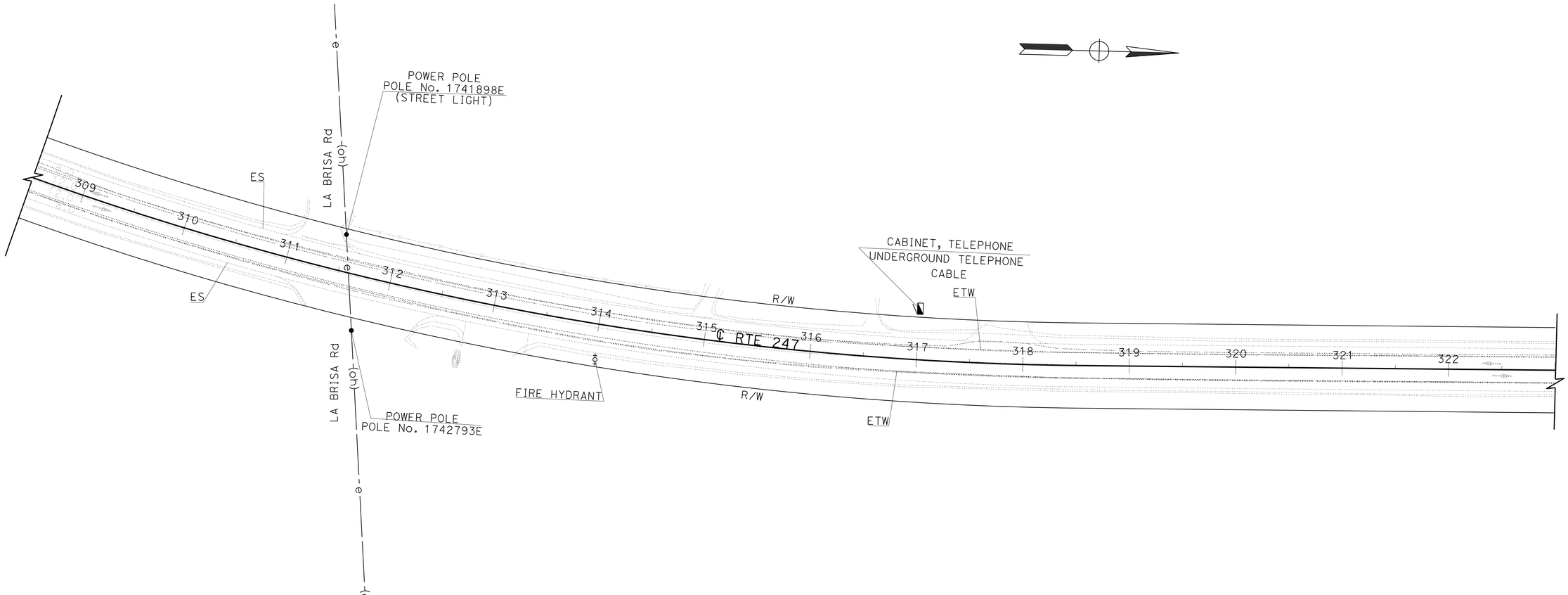

UTILITY PLAN

SCALE: 1" = 50'

U-13

APPROVED FOR UTILITY INFORMATION ONLY

REVISED BY | DATE REVISED

DAI HOANG | SERGIO E. AVILA

CALCULATED-DESIGNED BY | CHECKED BY

FUNCTIONAL SUPERVISOR: SERGIO E. AVILA

STATE OF CALIFORNIA - DEPARTMENT OF TRANSPORTATION
Caltrans® PROJECT DEVELOPMENT

LAST REVISION | DATE PLOTTED => 20-DEC-2013
12-16-13 | TIME PLOTTED => 10:15

BORDER LAST REVISED 7/2/2010

USERNAME => s110420
DGN FILE => 0800000146ka013.dgn

RELATIVE BORDER SCALE IS IN INCHES 0 1 2 3

UNIT 2237

PROJECT NUMBER & PHASE 08000001461

Dist	COUNTY	ROUTE	POST MILES TOTAL PROJECT	SHEET No.	TOTAL SHEETS
08	SBd	247	1.8/9.6	114	196

12-16-13
REGISTERED CIVIL ENGINEER DATE

12-16-13
PLANS APPROVAL DATE

REGISTERED PROFESSIONAL ENGINEER
DAI HOANG
No. C64203
Exp 6-30-15
CIVIL
STATE OF CALIFORNIA

THE STATE OF CALIFORNIA OR ITS OFFICERS OR AGENTS SHALL NOT BE RESPONSIBLE FOR THE ACCURACY OR COMPLETENESS OF SCANNED COPIES OF THIS PLAN SHEET.

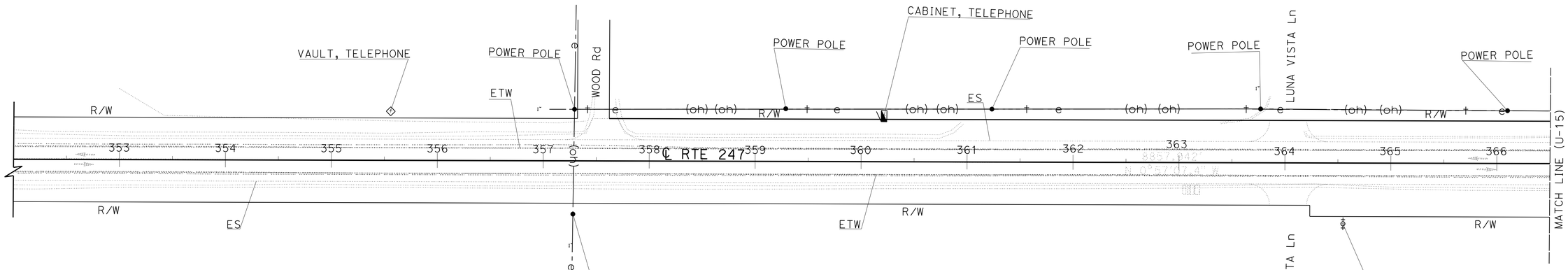

APPROVED FOR UTILITY INFORMATION ONLY

UTILITY PLAN

SCALE: 1" = 50′ **U-14**

STATE OF CALIFORNIA - DEPARTMENT OF TRANSPORTATION
Caltrans® PROJECT DEVELOPMENT

FUNCTIONAL SUPERVISOR: SERGIO E. AVILA

CALCULATED-DESIGNED BY: DAI HOANG
CHECKED BY: SERGIO E. AVILA

REVISED BY
DATE REVISED

LAST REVISION DATE PLOTTED => 20-DEC-2013
12-16-13 TIME PLOTTED => 10:15

BORDER LAST REVISED 7/2/2010

USERNAME => s110420
DGN FILE => 0800000146ka014.dgn

RELATIVE BORDER SCALE IS IN INCHES 0 1 2 3

UNIT 2237

PROJECT NUMBER & PHASE 08000001461

Dist	COUNTY	ROUTE	POST MILES TOTAL PROJECT	SHEET No.	TOTAL SHEETS
08	SBd	247	1.8/9.6	115	196

12-16-13
REGISTERED CIVIL ENGINEER DATE

12-16-13
PLANS APPROVAL DATE

REGISTERED PROFESSIONAL ENGINEER
DAI HOANG
No. C64203
Exp 6-30-15
CIVIL
STATE OF CALIFORNIA

THE STATE OF CALIFORNIA OR ITS OFFICERS OR AGENTS SHALL NOT BE RESPONSIBLE FOR THE ACCURACY OR COMPLETENESS OF SCANNED COPIES OF THIS PLAN SHEET.

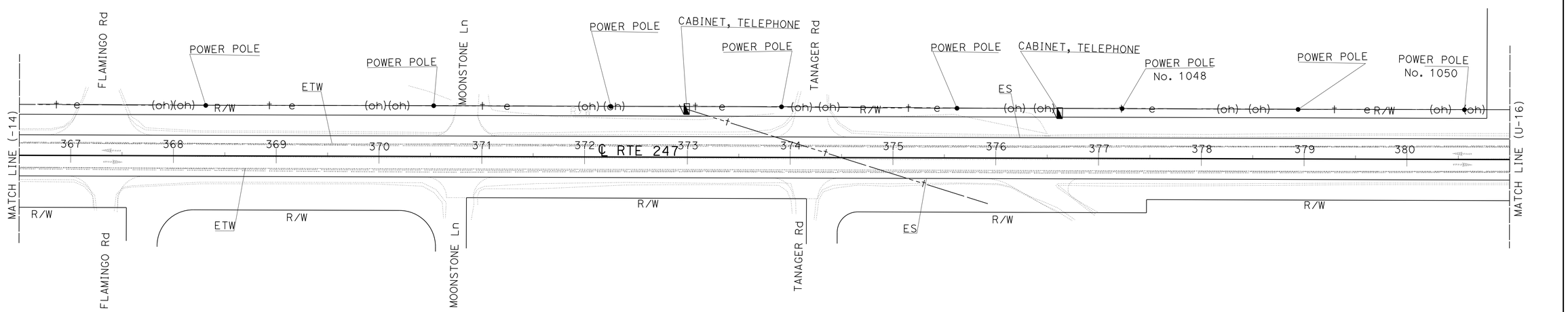

APPROVED FOR UTILITY INFORMATION ONLY

UTILITY PLAN

SCALE: 1" = 50'

U-15

CALCULATED-DESIGNED BY

CHECKED BY

DAI HOANG

SERGIO E. AVILA

REVISED BY

DATE REVISED

FUNCTIONAL SUPERVISOR

SERGIO E. AVILA

STATE OF CALIFORNIA - DEPARTMENT OF TRANSPORTATION

PROJECT DEVELOPMENT

LAST REVISION | DATE PLOTTED => 20-DEC-2013
12-16-13 | TIME PLOTTED => 10:15

BORDER LAST REVISED 7/2/2010

USERNAME => s110420
DGN FILE => 0800000146ka015.dgn

RELATIVE BORDER SCALE IS IN INCHES 0 1 2 3

UNIT 2237

PROJECT NUMBER & PHASE 08000001461

Dist	COUNTY	ROUTE	POST MILES TOTAL PROJECT	SHEET No.	TOTAL SHEETS
08	SBd	247	1.8/9.6	116	196

12-16-13
REGISTERED CIVIL ENGINEER DATE

12-16-13
PLANS APPROVAL DATE

REGISTERED PROFESSIONAL ENGINEER
DAI HOANG
No. C64203
Exp 6-30-15
CIVIL
STATE OF CALIFORNIA

THE STATE OF CALIFORNIA OR ITS OFFICERS OR AGENTS SHALL NOT BE RESPONSIBLE FOR THE ACCURACY OR COMPLETENESS OF SCANNED COPIES OF THIS PLAN SHEET.

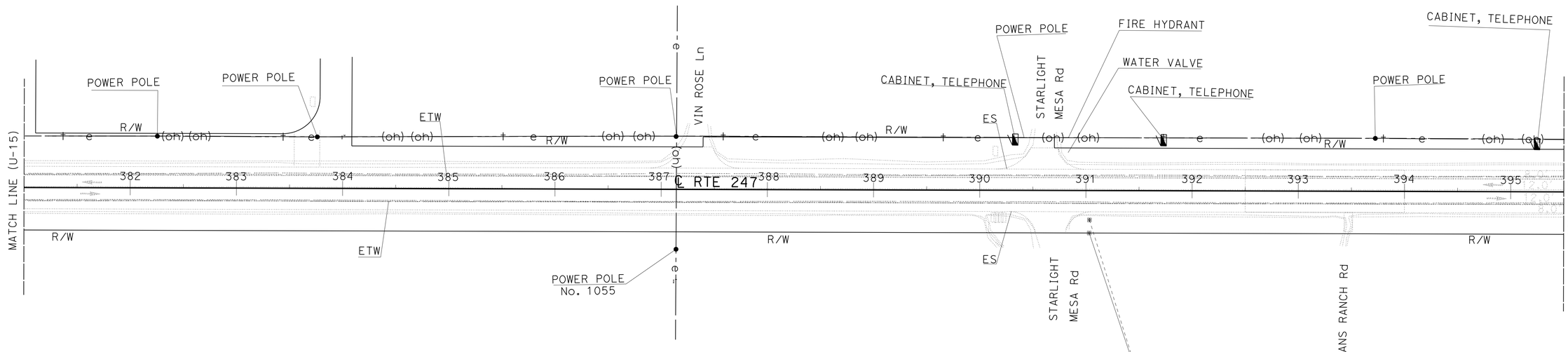

APPROVED FOR UTILITY INFORMATION ONLY

UTILITY PLAN

SCALE: 1" = 50'

U-16

REVISED BY | DATE REVISED
DAI HOANG | SERGIO E. AVILA
CALCULATED-DESIGNED BY | CHECKED BY
FUNCTIONAL SUPERVISOR: SERGIO E. AVILA
STATE OF CALIFORNIA - DEPARTMENT OF TRANSPORTATION
Caltrans® PROJECT DEVELOPMENT

LAST REVISION 12-16-13 | DATE PLOTTED => 20-DEC-2013 | TIME PLOTTED => 10:15

BORDER LAST REVISED 7/2/2010 | USERNAME => s110420 | DGN FILE => 0800000146ka016.dgn | RELATIVE BORDER SCALE IS IN INCHES 0 1 2 3 | UNIT 2237 | PROJECT NUMBER & PHASE 08000001461

Dist	COUNTY	ROUTE	POST MILES TOTAL PROJECT	SHEET No.	TOTAL SHEETS
08	SBd	247	1.8/9.6	117	196

12-16-13
REGISTERED CIVIL ENGINEER DATE

12-16-13
PLANS APPROVAL DATE

REGISTERED PROFESSIONAL ENGINEER
DAI HOANG
No. C64203
Exp 6-30-15
CIVIL
STATE OF CALIFORNIA

THE STATE OF CALIFORNIA OR ITS OFFICERS OR AGENTS SHALL NOT BE RESPONSIBLE FOR THE ACCURACY OR COMPLETENESS OF SCANNED COPIES OF THIS PLAN SHEET.

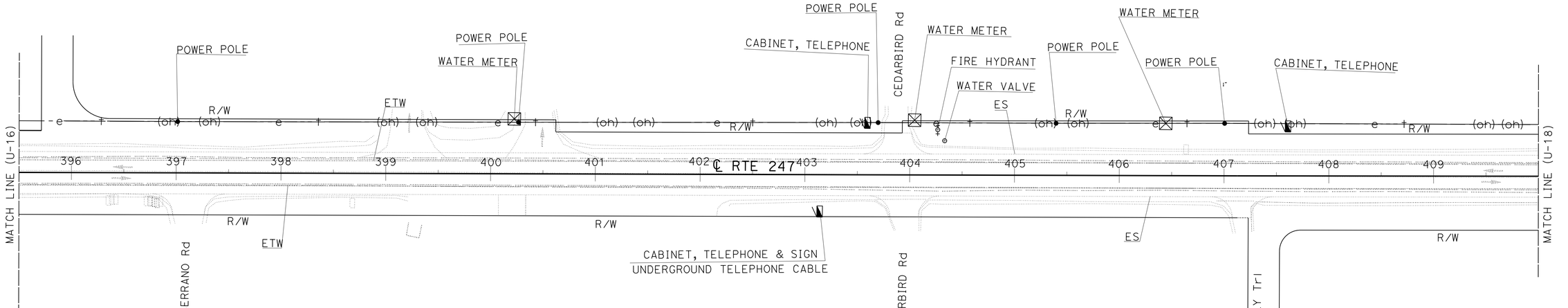

APPROVED FOR UTILITY INFORMATION ONLY

UTILITY PLAN

SCALE: 1" = 50′ **U-17**

STATE OF CALIFORNIA - DEPARTMENT OF TRANSPORTATION
PROJECT DEVELOPMENT

FUNCTIONAL SUPERVISOR: SERGIO E. AVILA

CALCULATED-DESIGNED BY: DAI HOANG
CHECKED BY: SERGIO E. AVILA

REVISED BY
DATE REVISED

LAST REVISION 12-16-13
DATE PLOTTED => 20-DEC-2013
TIME PLOTTED => 10:15

BORDER LAST REVISED 7/2/2010
USERNAME => s110420
DGN FILE => 0800000146ka017.dgn
RELATIVE BORDER SCALE IS IN INCHES 0 1 2 3
UNIT 2237
PROJECT NUMBER & PHASE 08000001461

Dist	COUNTY	ROUTE	POST MILES TOTAL PROJECT	SHEET No.	TOTAL SHEETS
08	SBd	247	1.8/9.6	118	196

12-16-13
REGISTERED CIVIL ENGINEER DATE

12-16-13
PLANS APPROVAL DATE

REGISTERED PROFESSIONAL ENGINEER
DAI HOANG
No. C64203
Exp. 6-30-15
CIVIL
STATE OF CALIFORNIA

THE STATE OF CALIFORNIA OR ITS OFFICERS OR AGENTS SHALL NOT BE RESPONSIBLE FOR THE ACCURACY OR COMPLETENESS OF SCANNED COPIES OF THIS PLAN SHEET.

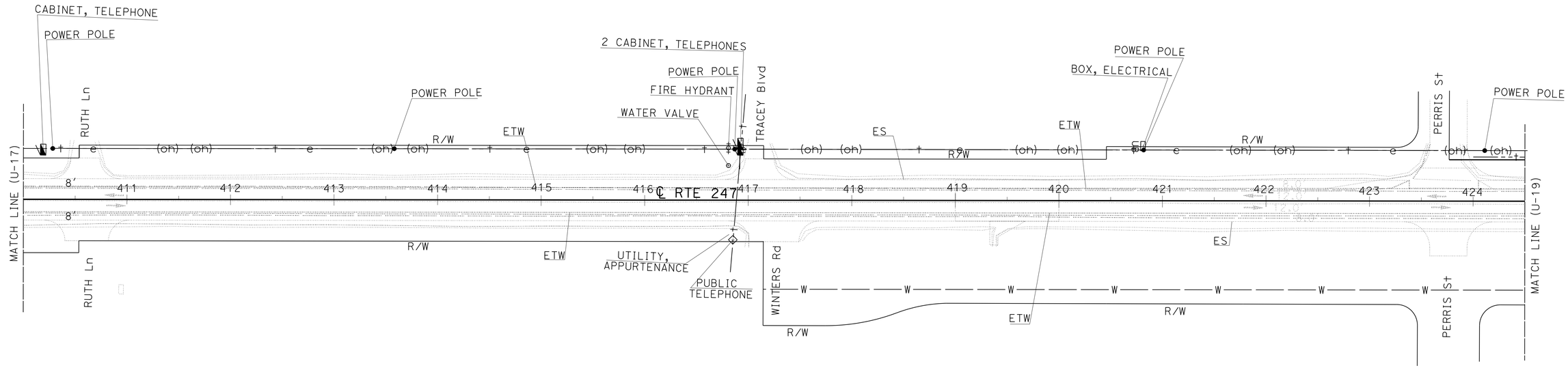

UTILITY PLAN

SCALE: 1" = 50' **U-18**

APPROVED FOR UTILITY INFORMATION ONLY

DATE PLOTTED => 20-DEC-2013
TIME PLOTTED => 10:15
LAST REVISION 12-16-13

STATE OF CALIFORNIA - DEPARTMENT OF TRANSPORTATION
Caltrans® PROJECT DEVELOPMENT

FUNCTIONAL SUPERVISOR: SERGIO E. AVILA

CALCULATED-DESIGNED BY: DAI HOANG
CHECKED BY: SERGIO E. AVILA

REVISED BY | DATE REVISED

BORDER LAST REVISED 7/2/2010

USERNAME => s110420
DGN FILE => 0800000146ka018.dgn

RELATIVE BORDER SCALE IS IN INCHES 0 1 2 3

UNIT 2237

PROJECT NUMBER & PHASE 08000001461

Dist	COUNTY	ROUTE	POST MILES TOTAL PROJECT	SHEET No.	TOTAL SHEETS
08	SBd	247	1.8/9.6	119	196

12-16-13
REGISTERED CIVIL ENGINEER DATE

12-16-13
PLANS APPROVAL DATE

REGISTERED PROFESSIONAL ENGINEER
DAI HOANG
No. C64203
Exp. 6-30-15
CIVIL
STATE OF CALIFORNIA

THE STATE OF CALIFORNIA OR ITS OFFICERS OR AGENTS SHALL NOT BE RESPONSIBLE FOR THE ACCURACY OR COMPLETENESS OF SCANNED COPIES OF THIS PLAN SHEET.

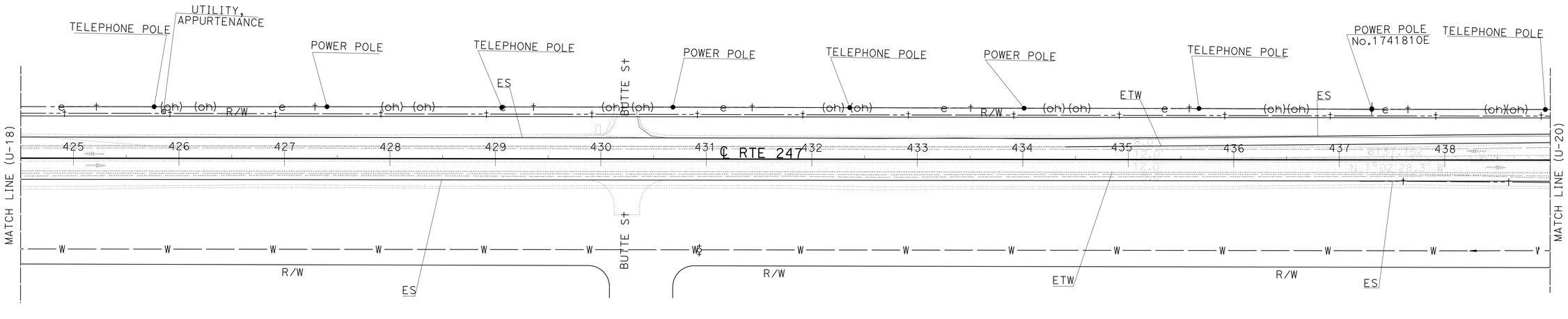

APPROVED FOR UTILITY INFORMATION ONLY

UTILITY PLAN

SCALE: 1" = 50' **U-19**

DAI HOANG
SERGIO E. AVILA

REVISED BY | DATE REVISED

CALCULATED-DESIGNED BY | CHECKED BY

FUNCTIONAL SUPERVISOR: SERGIO E. AVILA

STATE OF CALIFORNIA - DEPARTMENT OF TRANSPORTATION
Caltrans® PROJECT DEVELOPMENT

LAST REVISION | DATE PLOTTED => 20-DEC-2013
12-16-13 | TIME PLOTTED => 10:15

BORDER LAST REVISED 7/2/2010

USERNAME => s110420
DGN FILE => 0800000146ka019.dgn

RELATIVE BORDER SCALE IS IN INCHES 0 1 2 3

UNIT 2237

PROJECT NUMBER & PHASE 08000001461

Dist	COUNTY	ROUTE	POST MILES TOTAL PROJECT	SHEET No.	TOTAL SHEETS
08	SBd	247	1.8/9.6	120	196

12-16-13
REGISTERED CIVIL ENGINEER DATE

12-16-13
PLANS APPROVAL DATE

REGISTERED PROFESSIONAL ENGINEER
DAI HOANG
No. C64203
Exp. 6-30-15
CIVIL
STATE OF CALIFORNIA

THE STATE OF CALIFORNIA OR ITS OFFICERS OR AGENTS SHALL NOT BE RESPONSIBLE FOR THE ACCURACY OR COMPLETENESS OF SCANNED COPIES OF THIS PLAN SHEET.

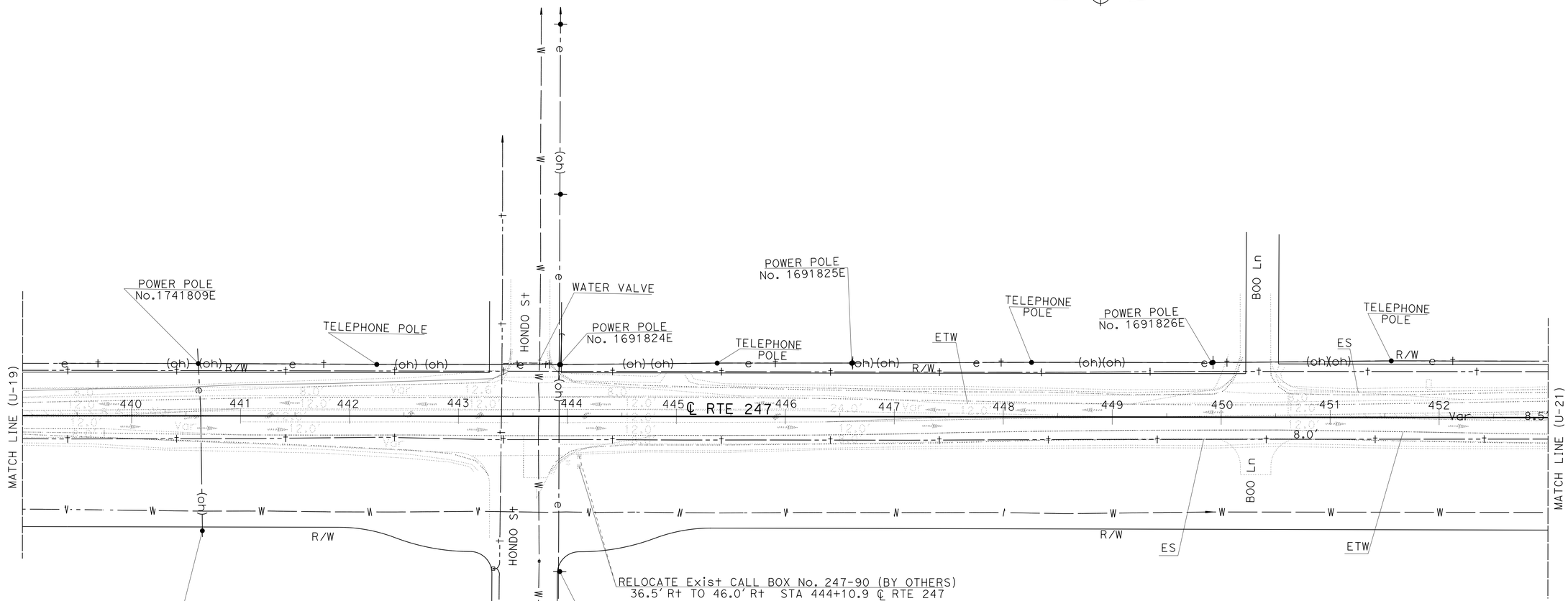

APPROVED FOR UTILITY INFORMATION ONLY

UTILITY PLAN

SCALE: 1" = 50' **U-20**

CALCULATED-DESIGNED BY: DAI HOANG
CHECKED BY: SERGIO E. AVILA
REVISED BY
DATE REVISED
FUNCTIONAL SUPERVISOR: SERGIO E. AVILA
STATE OF CALIFORNIA - DEPARTMENT OF TRANSPORTATION
Caltrans® PROJECT DEVELOPMENT

LAST REVISION 12-16-13
DATE PLOTTED => 20-DEC-2013
TIME PLOTTED => 10:15

BORDER LAST REVISED 7/2/2010
USERNAME => s110420
DGN FILE => 0800000146ka020.dgn
RELATIVE BORDER SCALE IS IN INCHES 0 1 2 3
UNIT 2237
PROJECT NUMBER & PHASE 08000001461

Dist	COUNTY	ROUTE	POST MILES TOTAL PROJECT	SHEET No.	TOTAL SHEETS
08	SBd	247	1.8/9.6	121	196

12-16-13
REGISTERED CIVIL ENGINEER DATE

12-16-13
PLANS APPROVAL DATE

REGISTERED PROFESSIONAL ENGINEER
DAI HOANG
No. C64203
Exp. 6-30-15
CIVIL
STATE OF CALIFORNIA

THE STATE OF CALIFORNIA OR ITS OFFICERS OR AGENTS SHALL NOT BE RESPONSIBLE FOR THE ACCURACY OR COMPLETENESS OF SCANNED COPIES OF THIS PLAN SHEET.

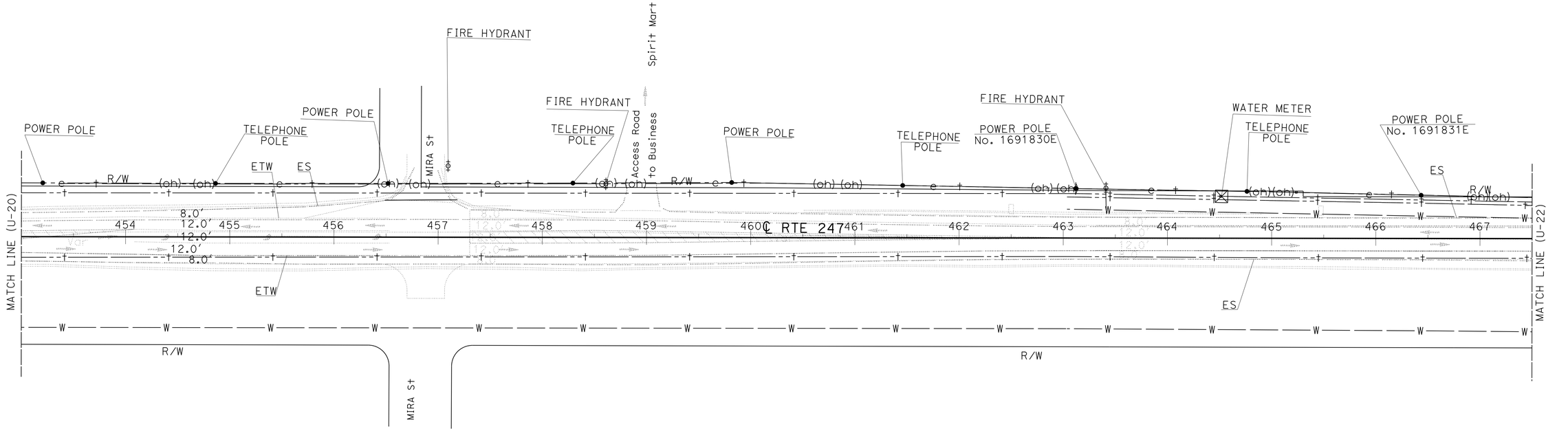

APPROVED FOR UTILITY INFORMATION ONLY

UTILITY PLAN

SCALE: 1" = 50' **U-21**

BORDER LAST REVISED 7/2/2010

USERNAME => s110420
DGN FILE => 0800000146ka021.dgn

RELATIVE BORDER SCALE IS IN INCHES 0 1 2 3

UNIT 2237

PROJECT NUMBER & PHASE 08000001461

LAST REVISION 12-16-13
DATE PLOTTED => 20-DEC-2013
TIME PLOTTED => 10:15

STATE OF CALIFORNIA - DEPARTMENT OF TRANSPORTATION
Caltrans® PROJECT DEVELOPMENT

FUNCTIONAL SUPERVISOR: SERGIO E. AVILA
CALCULATED-DESIGNED BY: DAI HOANG
CHECKED BY: SERGIO E. AVILA
DETAILED BY
REVISED BY
DATE REVISED

Dist	COUNTY	ROUTE	POST MILES TOTAL PROJECT	SHEET No.	TOTAL SHEETS
08	SBd	247	1.8/9.6	122	196

12-16-13
REGISTERED CIVIL ENGINEER DATE

12-16-13
PLANS APPROVAL DATE

REGISTERED PROFESSIONAL ENGINEER
DAI HOANG
No. C64203
Exp. 6-30-15
CIVIL
STATE OF CALIFORNIA

THE STATE OF CALIFORNIA OR ITS OFFICERS OR AGENTS SHALL NOT BE RESPONSIBLE FOR THE ACCURACY OR COMPLETENESS OF SCANNED COPIES OF THIS PLAN SHEET.

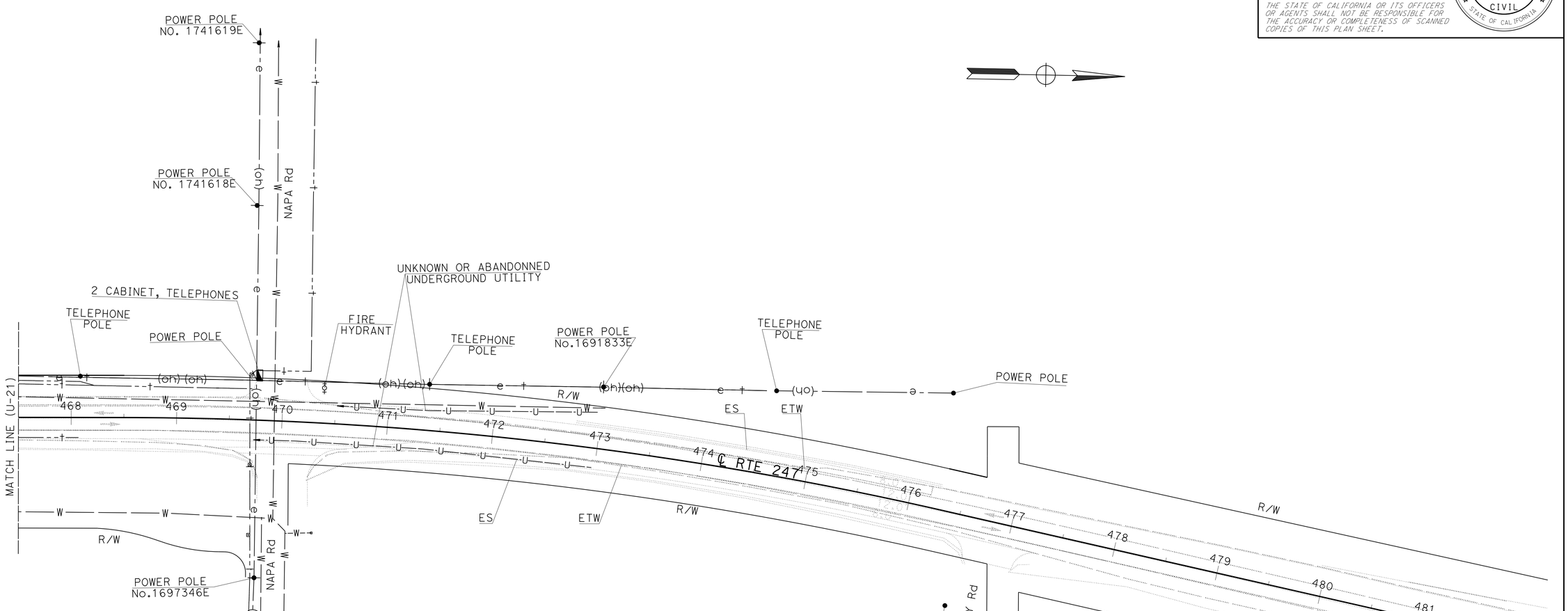

APPROVED FOR UTILITY INFORMATION ONLY

UTILITY PLAN

SCALE: 1" = 50' **U-22**

CALCULATED- DAI HOANG
DESIGNED BY SERGIO E. AVILA
CHECKED BY

REVISED BY
DATE REVISED

FUNCTIONAL SUPERVISOR SERGIO E. AVILA

STATE OF CALIFORNIA - DEPARTMENT OF TRANSPORTATION
Caltrans® PROJECT DEVELOPMENT

LAST REVISION DATE PLOTTED => 20-DEC-2013
TIME PLOTTED => 10:15
12-16-13

BORDER LAST REVISED 7/2/2010

USERNAME => s110420
DGN FILE => 0800000146ka022.dgn

RELATIVE BORDER SCALE IS IN INCHES 0 1 2 3

UNIT 2237

PROJECT NUMBER & PHASE 08000001461

Dist	COUNTY	ROUTE	POST MILES TOTAL PROJECT	SHEET No.	TOTAL SHEETS
08	SBd	247	1.8/9.6	123	196

M.M. Kamgar Haghighi 12-16-13
REGISTERED CIVIL ENGINEER DATE

12-16-13
PLANS APPROVAL DATE

REGISTERED PROFESSIONAL ENGINEER
M.M.KAMGAR
No. C58039
Exp. 6-30-14
CIVIL
STATE OF CALIFORNIA

THE STATE OF CALIFORNIA OR ITS OFFICERS OR AGENTS SHALL NOT BE RESPONSIBLE FOR THE ACCURACY OR COMPLETENESS OF SCANNED COPIES OF THIS PLAN SHEET.

LEGEND:

CONSTRUCTION AREA

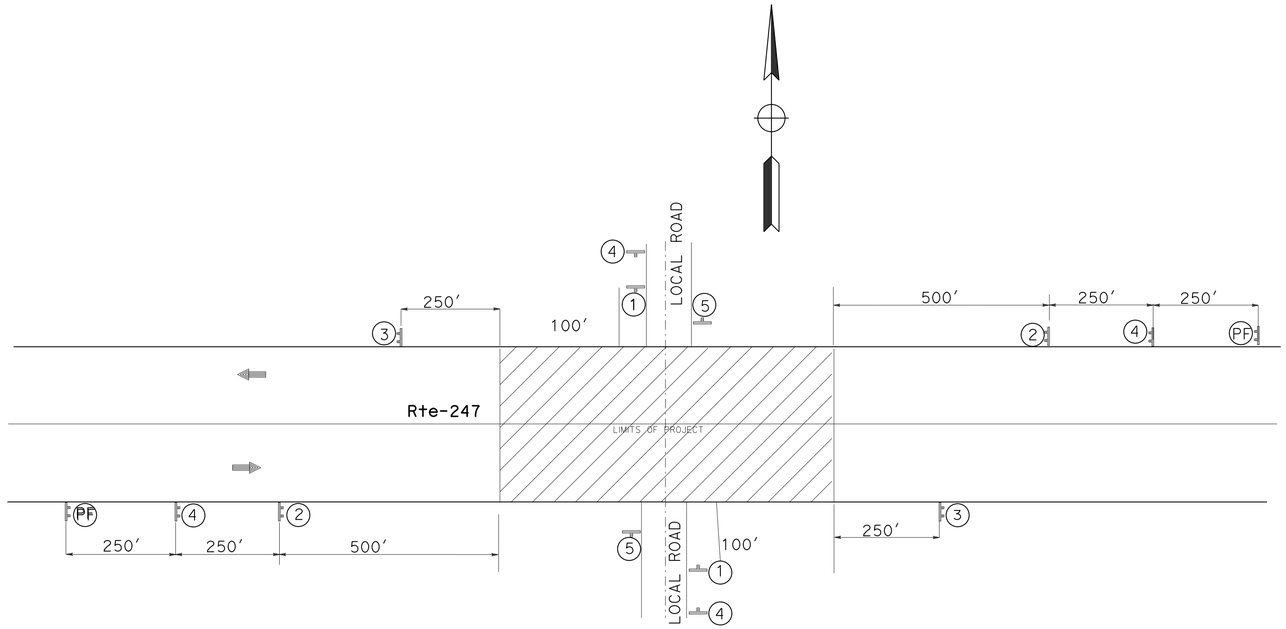

TYPICAL INSTALLATION OF CONSTRUCTION AREA SIGNS

STATIONARY MOUNTED CONSTRUCTION AREA SIGNS

SIGN No. (X)	SIGN CODE FEDERAL	SIGN CODE CALIFORNIA	PANEL SIZE	SIGN MESSAGE	NUMBER OF POSTS (S) AND SIZE	NUMBER OF SIGNS
(1)	W20-1		36" X 36"	ROAD WORK AHEAD	1 - 4" X 6"	13
(2)	W20-1		48" X 48"	ROAD WORK AHEAD	2 - 4" X 6"	2
(3)	G20-2		48" X 30"	END ROADWORK	2 - 4" X 6"	2
(4)		C40	144" X 60"	TRAFFIC FINES DOUBLED IN CONSTRUCTION ZONE	2 - 4" X 6"	15
(5)	G20-2		36" X 30"	END ROADWORK	1 - 4" X 6"	13
(PF)			60" X 90"	PROJECT FUNDING SIGN	2 - 4" X 6"	2

(S)DENOTES STATIONARY MOUNTED SIGN
EXACT LOCATION OF THE SIGNS SHAL BE DETERMINED BY THE ENGINEER.

PORTABLE CHANGEABLE MESSAGE SIGN (PCMS)
EA
4

APPROVED FOR CONSTRUCTION AREA SIGN WORK ONLY

CONSTRUCTION AREA SIGN

NO SCALE **CS-1**

CALCULATED-DESIGNED BY: MEHDI KAMGAR
CHECKED BY: D.NAMI
REVISED BY / DATE REVISED
FUNCTIONAL SUPERVISOR: Bill Wasser
STATE OF CALIFORNIA - DEPARTMENT OF TRANSPORTATION
Caltrans® TRAFFIC DESIGN

LAST REVISION 12-16-13
DATE PLOTTED => 20-DEC-2013
TIME PLOTTED => 10:15

BORDER LAST REVISED 7/2/2010
USERNAME => s110420
DGN FILE => 08000001461a001.dgn
RELATIVE BORDER SCALE IS IN INCHES 0 1 2 3
UNIT 2285
PROJECT NUMBER & PHASE 08000001461

Dist	COUNTY	ROUTE	POST MILES TOTAL PROJECT	SHEET No.	TOTAL SHEETS
08	SBd	247	1.8/9.6	124	196

M.M. Kamgar Haghighi 12-16-13
REGISTERED CIVIL ENGINEER DATE

12-16-13
PLANS APPROVAL DATE

REGISTERED PROFESSIONAL ENGINEER
M.M.Kamgar
No. C58039
Exp 6-30-14
CIVIL
STATE OF CALIFORNIA

THE STATE OF CALIFORNIA OR ITS OFFICERS OR AGENTS SHALL NOT BE RESPONSIBLE FOR THE ACCURACY OR COMPLETENESS OF SCANNED COPIES OF THIS PLAN SHEET.

NOTES:

1. USE STD PLAN RSP T-13 AND FLAGGING TO DIRECT TRAFFIC THROUGH THE WORK AREA DURING CONSTRUCTION.
2. PROVIDE TWO LANES, ONE IN EACH DIRECTION, NOT LESS THAN 11 FEET AFTER CONSTRUCTION HOURS.

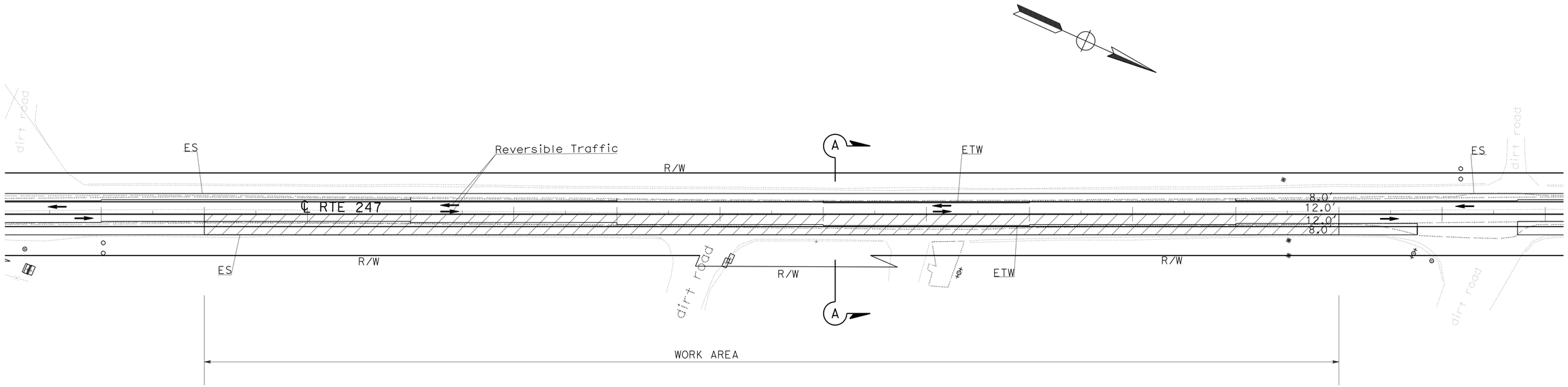

TYPICAL ONE LANE - TWO WAY RIVERSIBLE TRAFFIC CONTROL

(SEE STD PLAN RSP T13)

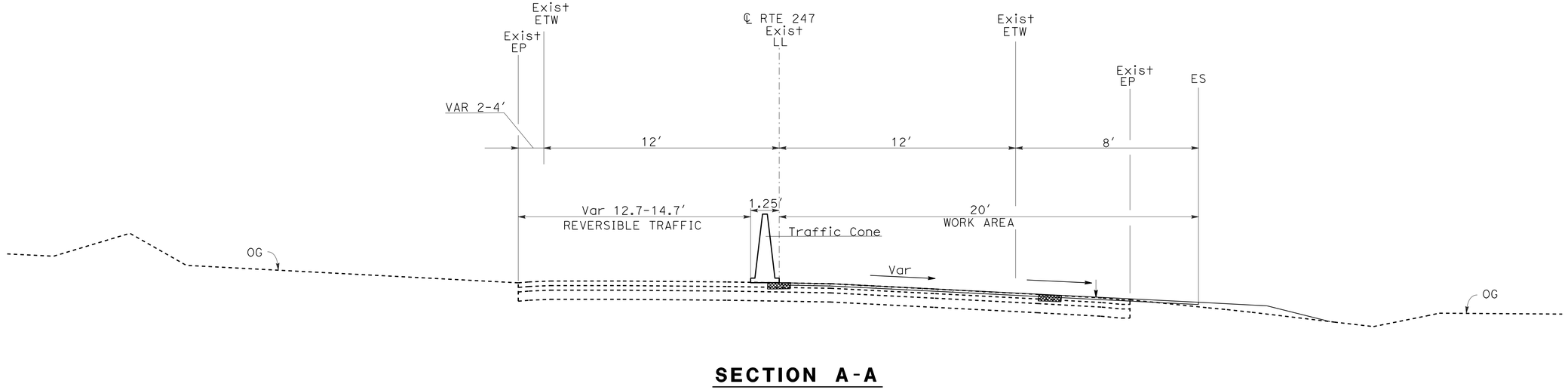

SECTION A-A

THIS PLAN IS ACCURATE FOR TRAFFIC HANDLING PLAN WORK ONLY

TYPICAL TRAFFIC HANDLING PLAN

NO SCALE

TH-1

REVISED BY | DATE REVISED
Mehdi Kamgar | D.NAMI
CALCULATED-DESIGNED BY | CHECKED BY
FUNCTIONAL SUPERVISOR: Bill Wasser
STATE OF CALIFORNIA - DEPARTMENT OF TRANSPORTATION
Caltrans® TRAFFIC DESIGN

LAST REVISION 12-16-13 | DATE PLOTTED => 20-DEC-2013 | TIME PLOTTED => 10:15

BORDER LAST REVISED 7/2/2010 | USERNAME => s110420 | DGN FILE => 0800000146md001.dgn | RELATIVE BORDER SCALE IS IN INCHES 0 1 2 3 | UNIT 2285 | PROJECT NUMBER & PHASE 080000146

Dist	COUNTY	ROUTE	POST MILES TOTAL PROJECT	SHEET No.	TOTAL SHEETS
08	SBd	247	1.8/9.6	125	196

M.M. Kamgar Haghighi 12-16-13
REGISTERED CIVIL ENGINEER DATE

12-16-13
PLANS APPROVAL DATE

REGISTERED PROFESSIONAL ENGINEER
M.KAMGAR
No. C58039
Exp 6-30-14
CIVIL
STATE OF CALIFORNIA

THE STATE OF CALIFORNIA OR ITS OFFICERS OR AGENTS SHALL NOT BE RESPONSIBLE FOR THE ACCURACY OR COMPLETENESS OF SCANNED COPIES OF THIS PLAN SHEET.

LEGENDS

- DIRECTION OF TRAVEL
- TYPE IV ARROW
- TYPE VI ARROW
- ONE POST SIGN
- STRIPING DETAIL

NOTE:

1- RESET ALL EXISTING ROADSIDE SIGNS TO THE NEW EDGE OF SHOULDER OR AS DIRECTED BY THE ENGINEER.

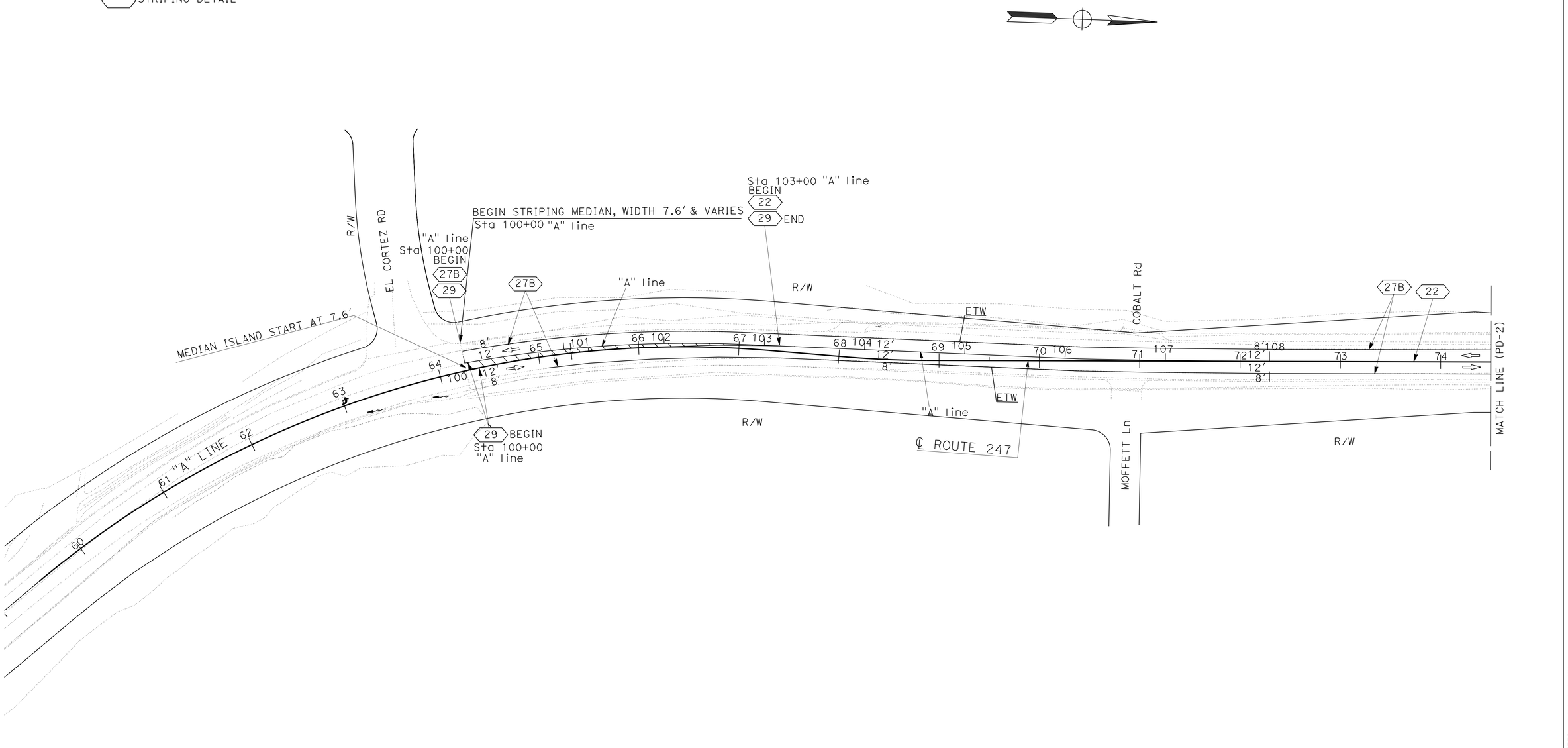

PAVEMENT DELINEATION & SIGNING

SCALE: 1" = 50'

PD-1

APPROVED FOR PAVEMENT DELINEATION AND SIGN WORK ONLY

REVISED BY	DATE REVISED

CALCULATED-DESIGNED BY: MEHDI KAMGAR
CHECKED BY: D.NAMI
FUNCTIONAL SUPERVISOR: BILL WASSER

STATE OF CALIFORNIA - DEPARTMENT OF TRANSPORTATION
Caltrans
TRAFFIC DESIGN

LAST REVISION 12-16-13
DATE PLOTTED => 20-DEC-2013
TIME PLOTTED => 10:15

BORDER LAST REVISED 7/2/2010

USERNAME => s110420
DGN FILE => 0800000146na001.dgn

RELATIVE BORDER SCALE IS IN INCHES 0 1 2 3

UNIT 2285

PROJECT NUMBER & PHASE 08000001461

Dist	COUNTY	ROUTE	POST MILES TOTAL PROJECT	SHEET No.	TOTAL SHEETS
08	SBd	247	1.8/9.6	126	196

M.M. Kamgar Haghighi 12-16-13
REGISTERED CIVIL ENGINEER DATE

12-16-13
PLANS APPROVAL DATE

REGISTERED PROFESSIONAL ENGINEER
M.KAMGAR
No. C58039
Exp 6-30-14
CIVIL
STATE OF CALIFORNIA

THE STATE OF CALIFORNIA OR ITS OFFICERS OR AGENTS SHALL NOT BE RESPONSIBLE FOR THE ACCURACY OR COMPLETENESS OF SCANNED COPIES OF THIS PLAN SHEET.

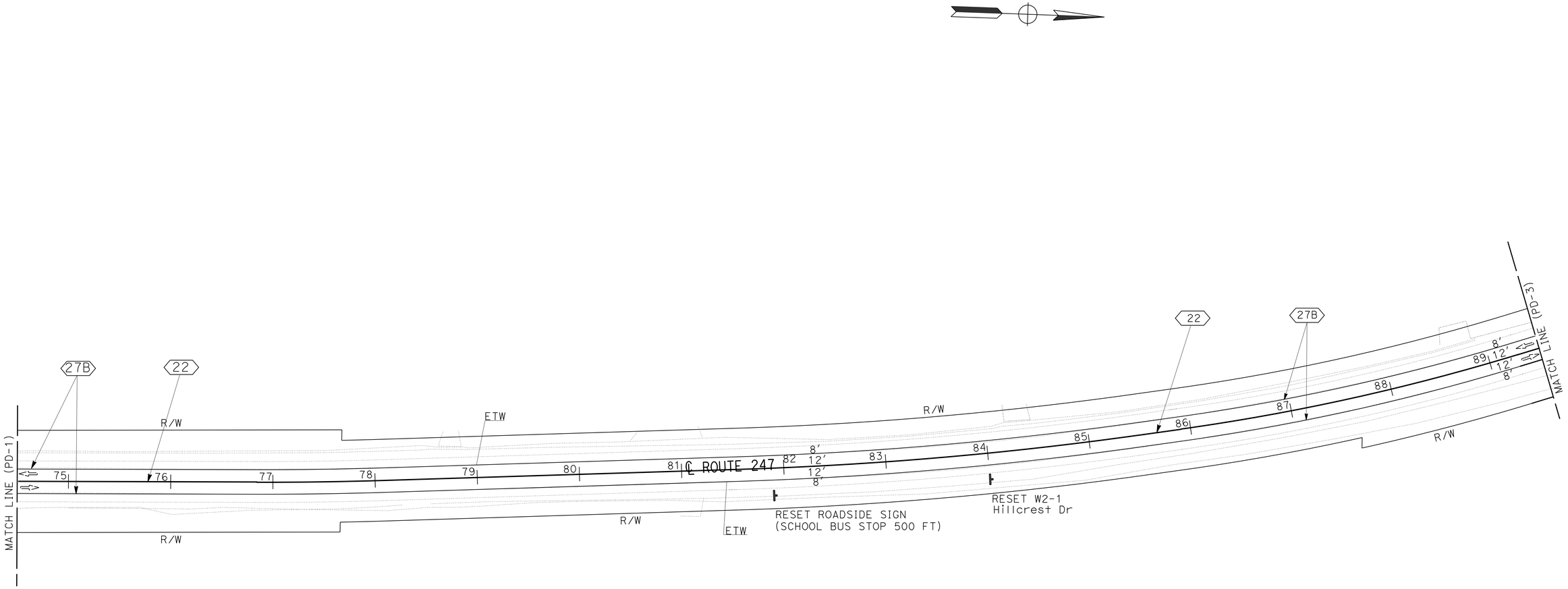

APPROVED FOR PAVEMENT DELINEATION AND SIGN WORK ONLY

PAVEMENT DELINEATION & SIGNING

SCALE: 1" = 50′

PD-2

CALCULATED-DESIGNED BY
MEHDI KAMGAR

CHECKED BY
D.NAMI

REVISED BY

DATE REVISED

FUNCTIONAL SUPERVISOR
BILL WASSER

STATE OF CALIFORNIA - DEPARTMENT OF TRANSPORTATION
TRAFFIC DESIGN

LAST REVISION | DATE PLOTTED => 20-DEC-2013
12-16-13 | TIME PLOTTED => 10:15

BORDER LAST REVISED 7/2/2010

USERNAME => s110420
DGN FILE => 0800000146na002.dgn

RELATIVE BORDER SCALE IS IN INCHES 0 1 2 3

UNIT 2285

PROJECT NUMBER & PHASE 08000001461

Dist	COUNTY	ROUTE	POST MILES TOTAL PROJECT	SHEET No.	TOTAL SHEETS
08	SBd	247	1.8/9.6	127	196

M.M. Kamgar Haghighi 12-16-13
REGISTERED CIVIL ENGINEER DATE

12-16-13
PLANS APPROVAL DATE

M.M.KAMGAR
No. C58039
Exp 6-30-14
CIVIL
REGISTERED PROFESSIONAL ENGINEER
STATE OF CALIFORNIA

THE STATE OF CALIFORNIA OR ITS OFFICERS OR AGENTS SHALL NOT BE RESPONSIBLE FOR THE ACCURACY OR COMPLETENESS OF SCANNED COPIES OF THIS PLAN SHEET.

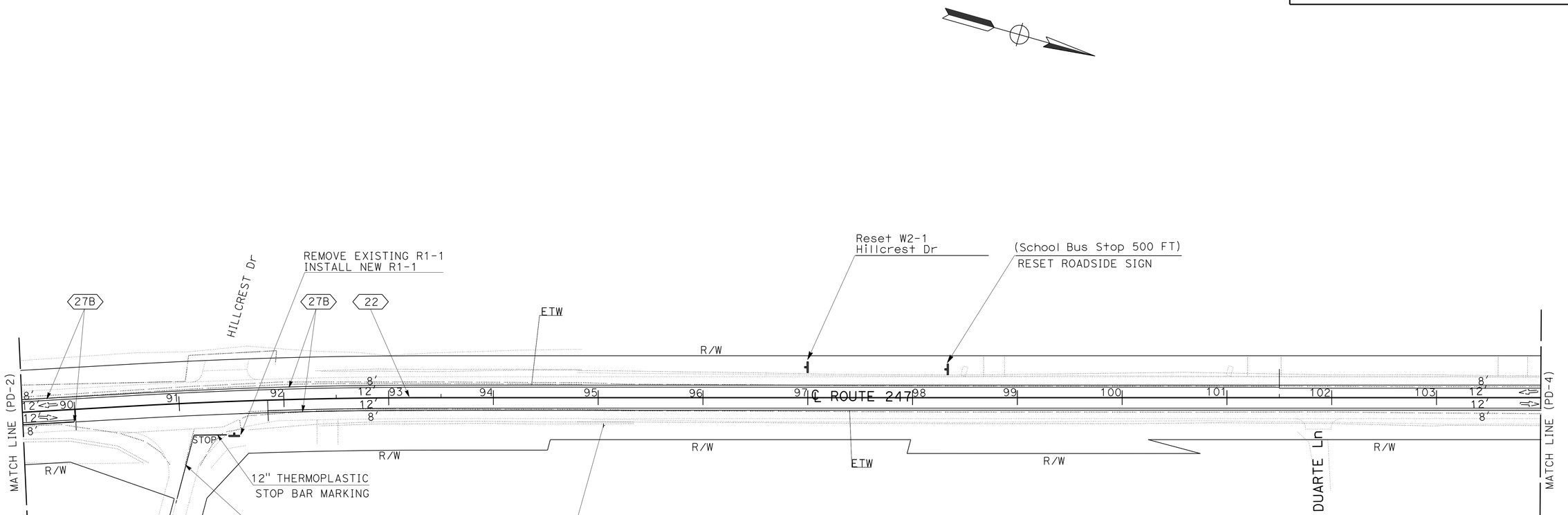

APPROVED FOR PAVEMENT DELINEATION AND SIGN WORK ONLY

PAVEMENT DELINEATION AND SIGNING

SCALE: 1" = 50'

PD-3

STATE OF CALIFORNIA - DEPARTMENT OF TRANSPORTATION
Caltrans® TRAFFIC DESIGN

FUNCTIONAL SUPERVISOR: BILL WASSER
CALCULATED-DESIGNED BY: MEHDI KAMGAR
CHECKED BY: D.NAMI
REVISED BY
DATE REVISED

LAST REVISION
DATE PLOTTED => 20-DEC-2013
TIME PLOTTED => 10:15
12-16-13

BORDER LAST REVISED 7/2/2010
USERNAME => s110420
DGN FILE => 0800000146na003.dgn
RELATIVE BORDER SCALE IS IN INCHES 0 1 2 3
UNIT 2285
PROJECT NUMBER & PHASE 08000001461

Dist	COUNTY	ROUTE	POST MILES TOTAL PROJECT	SHEET No.	TOTAL SHEETS
08	SBd	247	1.8/9.6	128	196

M.M. Kamgar Haghighi 12-16-13
REGISTERED CIVIL ENGINEER DATE

12-16-13
PLANS APPROVAL DATE

REGISTERED PROFESSIONAL ENGINEER
M.KAMGAR
No. C58039
Exp 6-30-14
CIVIL
STATE OF CALIFORNIA

THE STATE OF CALIFORNIA OR ITS OFFICERS OR AGENTS SHALL NOT BE RESPONSIBLE FOR THE ACCURACY OR COMPLETENESS OF SCANNED COPIES OF THIS PLAN SHEET.

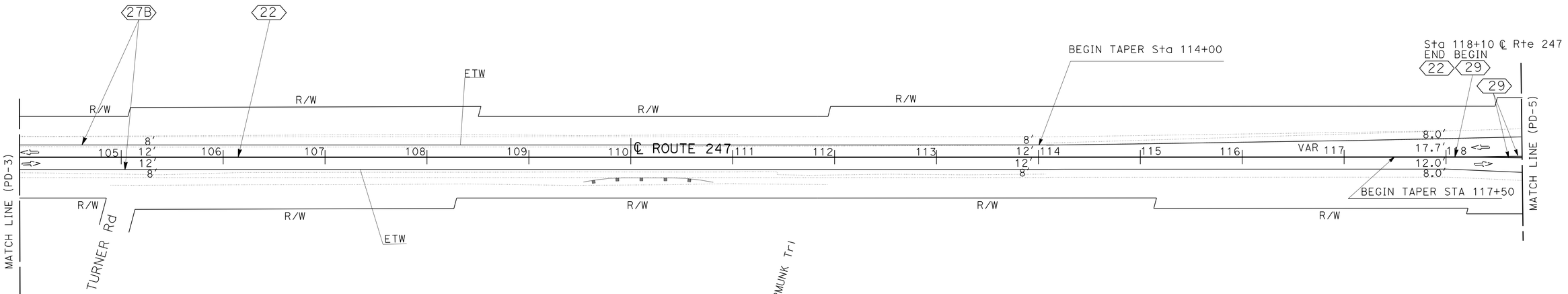

APPROVED FOR PAVEMENT DELINEATION AND SIGN WORK ONLY

PAVEMENT DELINEATION & SIGNING

SCALE: 1" = 50'

PD-4

CALCULATED-DESIGNED BY: MEHDI KAMGAR
CHECKED BY: D.NAMI
REVISED BY
DATE REVISED
FUNCTIONAL SUPERVISOR: BILL WASSER

STATE OF CALIFORNIA - DEPARTMENT OF TRANSPORTATION
Caltrans®
TRAFFIC DESIGN

LAST REVISION 12-16-13
DATE PLOTTED => 20-DEC-2013
TIME PLOTTED => 10:15

BORDER LAST REVISED 7/2/2010
USERNAME => s110420
DGN FILE => 0800000146na004.dgn
RELATIVE BORDER SCALE IS IN INCHES 0 1 2 3
UNIT 2285
PROJECT NUMBER & PHASE 08000001461

Dist	COUNTY	ROUTE	POST MILES TOTAL PROJECT	SHEET No.	TOTAL SHEETS
08	SBd	247	1.8/9.6	129	196

M.M. Kamgar Hayhigh 12-16-13
REGISTERED CIVIL ENGINEER DATE

12-16-13
PLANS APPROVAL DATE

REGISTERED PROFESSIONAL ENGINEER
M.KAMGAR
No. C58039
Exp 6-30-14
CIVIL
STATE OF CALIFORNIA

THE STATE OF CALIFORNIA OR ITS OFFICERS OR AGENTS SHALL NOT BE RESPONSIBLE FOR THE ACCURACY OR COMPLETENESS OF SCANNED COPIES OF THIS PLAN SHEET.

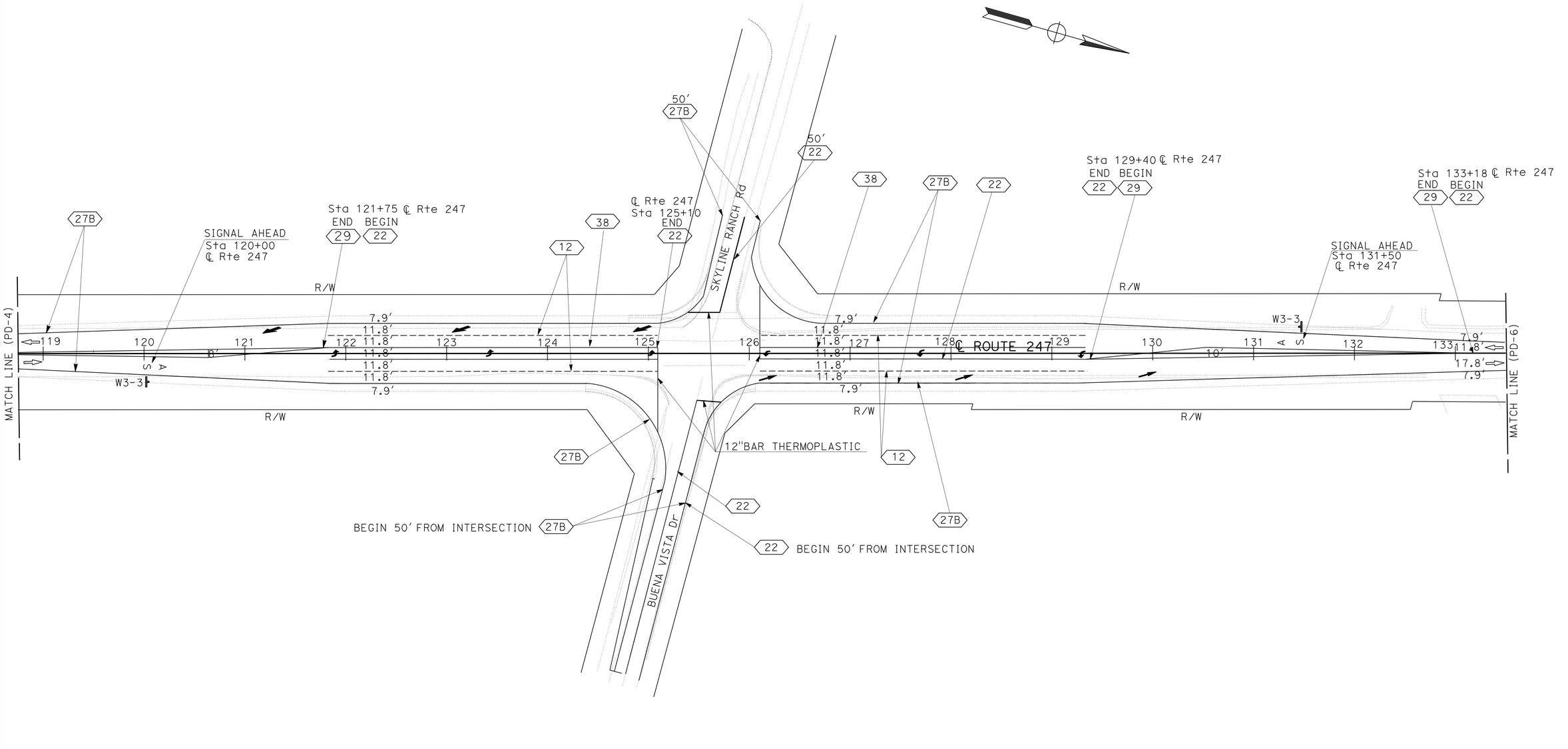

APPROVED FOR PAVEMENT DELINEATION AND SIGN WORK ONLY

PAVEMENT DELINEATION & SIGNING

SCALE: 1" = 50′

PD-5

STATE OF CALIFORNIA - DEPARTMENT OF TRANSPORTATION
TRAFFIC DESIGN
FUNCTIONAL SUPERVISOR: BILL WASSER
CALCULATED-DESIGNED BY
CHECKED BY
MEHDI KAMGAR
D.NAMI
REVISED BY
DATE REVISED

LAST REVISION | DATE PLOTTED => 20-DEC-2013
12-16-13 | TIME PLOTTED => 10:15

BORDER LAST REVISED 7/2/2010
USERNAME => s110420
DGN FILE => 0800000146na005.dgn
RELATIVE BORDER SCALE IS IN INCHES 0 1 2 3
UNIT 2285
PROJECT NUMBER & PHASE 08000001461

Dist	COUNTY	ROUTE	POST MILES TOTAL PROJECT	SHEET No.	TOTAL SHEETS
08	SBd	247	1.8/9.6	130	196

M.M. Kamgar Haghighi 12-16-13
REGISTERED CIVIL ENGINEER DATE

12-16-13
PLANS APPROVAL DATE

REGISTERED PROFESSIONAL ENGINEER
M.KAMGAR
No. C58039
Exp 6-30-14
CIVIL
STATE OF CALIFORNIA

THE STATE OF CALIFORNIA OR ITS OFFICERS OR AGENTS SHALL NOT BE RESPONSIBLE FOR THE ACCURACY OR COMPLETENESS OF SCANNED COPIES OF THIS PLAN SHEET.

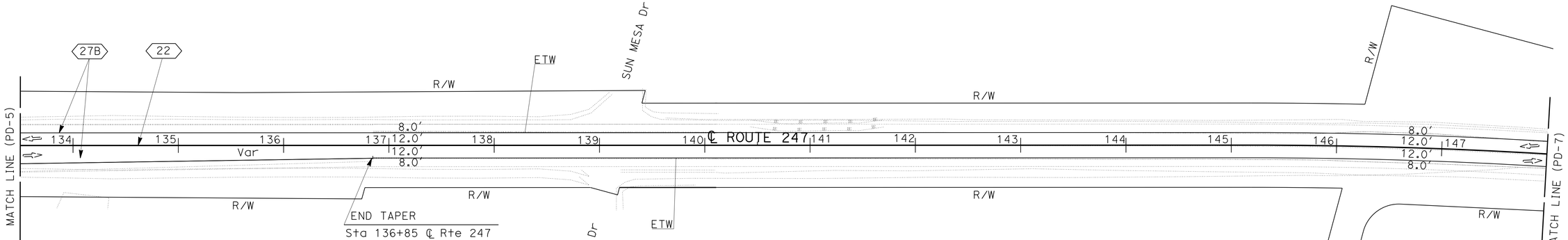

PAVEMENT DELINEATION AND SIGNING

SCALE: 1" = 50'

PD-6

APPROVED FOR PAVEMENT DELINEATION AND SIGN WORK ONLY

CALCULATED-DESIGNED BY: MEHDI KAMGAR
CHECKED BY: D.NAMI
REVISED BY
DATE REVISED
FUNCTIONAL SUPERVISOR: BILL WASSER
STATE OF CALIFORNIA - DEPARTMENT OF TRANSPORTATION
Caltrans® TRAFFIC DESIGN

LAST REVISION DATE PLOTTED => 20-DEC-2013
12-16-13 TIME PLOTTED => 10:15

BORDER LAST REVISED 7/2/2010
USERNAME => s110420
DGN FILE => 0800000146na006.dgn
RELATIVE BORDER SCALE IS IN INCHES 0 1 2 3
UNIT 2285
PROJECT NUMBER & PHASE 08000001461

Dist	COUNTY	ROUTE	POST MILES TOTAL PROJECT	SHEET No.	TOTAL SHEETS
08	SBd	247	1.8/9.6	131	196

M.M. Kamgar Haghighi 12-16-13
REGISTERED CIVIL ENGINEER DATE

12-16-13
PLANS APPROVAL DATE

REGISTERED PROFESSIONAL ENGINEER
M.KAMGAR
No. C58039
Exp 6-30-14
CIVIL
STATE OF CALIFORNIA

THE STATE OF CALIFORNIA OR ITS OFFICERS OR AGENTS SHALL NOT BE RESPONSIBLE FOR THE ACCURACY OR COMPLETENESS OF SCANNED COPIES OF THIS PLAN SHEET.

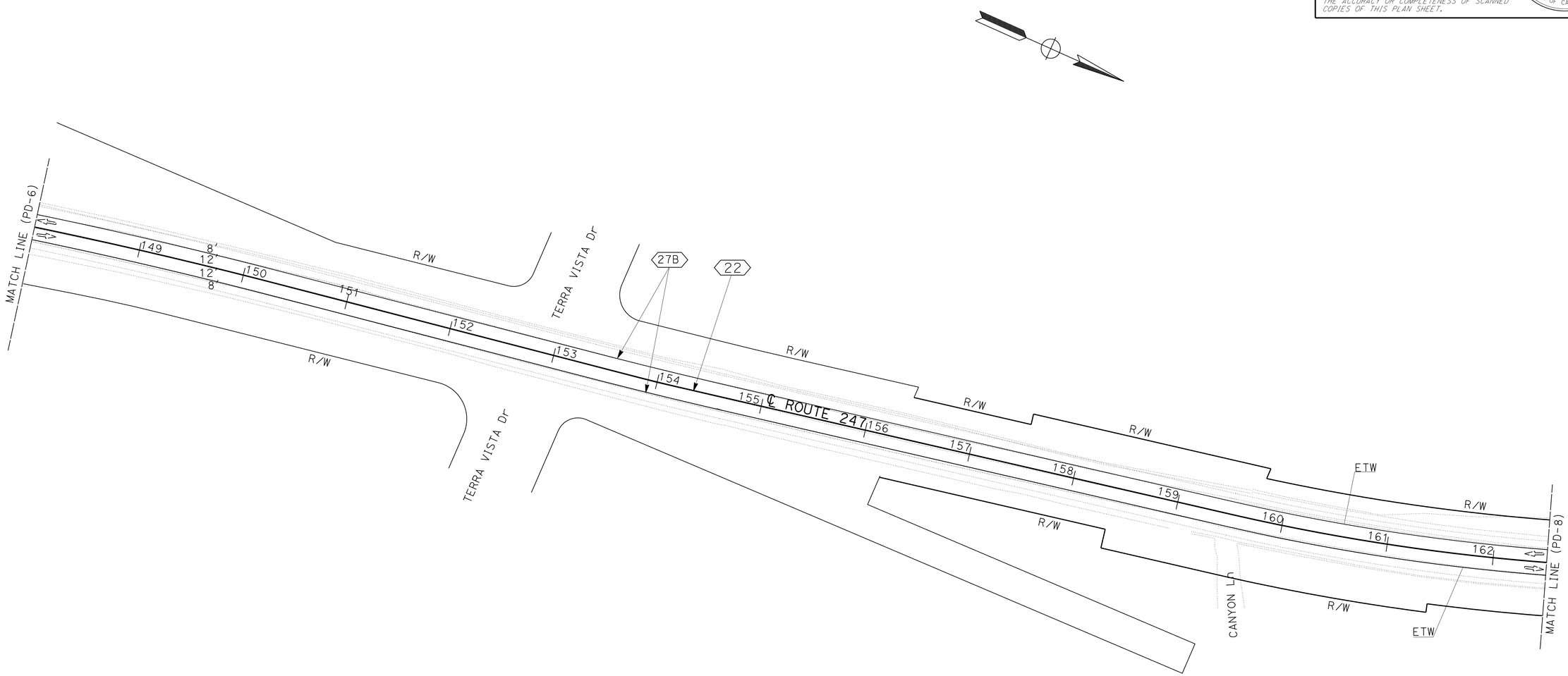

APPROVED FOR PAVEMENT DELINEATION AND SIGN WORK ONLY

PAVEMENT DELINEATION AND SIGNING

SCALE: 1" = 50'

PD-7

REVISED BY | DATE REVISED
MEHDI KAMGAR | D.NAMI
CALCULATED-DESIGNED BY | CHECKED BY
FUNCTIONAL SUPERVISOR: BILL WASSER

STATE OF CALIFORNIA - DEPARTMENT OF TRANSPORTATION
Caltrans® TRAFFIC DESIGN

LAST REVISION | DATE PLOTTED => 20-DEC-2013 | TIME PLOTTED => 10:15
12-16-13

BORDER LAST REVISED 7/2/2010
USERNAME => s110420
DGN FILE => 0800000146na007.dgn
RELATIVE BORDER SCALE IS IN INCHES 0 1 2 3
UNIT 2285 | PROJECT NUMBER & PHASE 08000001461

Dist	COUNTY	ROUTE	POST MILES TOTAL PROJECT	SHEET No.	TOTAL SHEETS
08	SBd	247	1.8/9.6	132	196

M.M. Kamgar Hayfigh 12-16-13
REGISTERED CIVIL ENGINEER DATE

12-16-13
PLANS APPROVAL DATE

REGISTERED PROFESSIONAL ENGINEER
M.KAMGAR
No. C58039
Exp 6-30-14
CIVIL
STATE OF CALIFORNIA

THE STATE OF CALIFORNIA OR ITS OFFICERS OR AGENTS SHALL NOT BE RESPONSIBLE FOR THE ACCURACY OR COMPLETENESS OF SCANNED COPIES OF THIS PLAN SHEET.

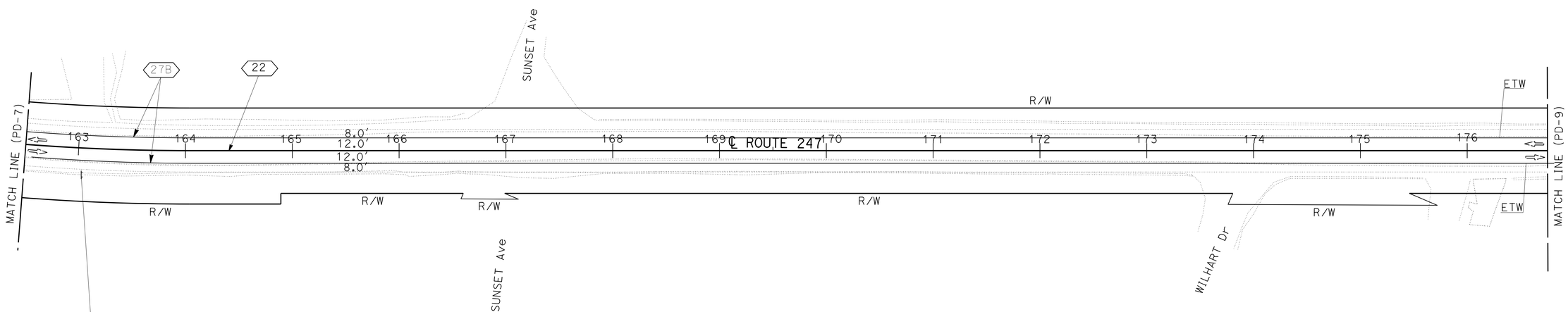

APPROVED FOR PAVEMENT DELINEATION AND SIGN WORK ONLY

PAVEMENT DELINEATION & SIGNING

SCALE: 1" = 50'

PD-8

STATE OF CALIFORNIA - DEPARTMENT OF TRANSPORTATION
Caltrans® TRAFFIC DESIGN
FUNCTIONAL SUPERVISOR: BILL WASSER
CALCULATED-DESIGNED BY: MEHDI KAMGAR
CHECKED BY: D.NAMI
REVISED BY | DATE REVISED

LAST REVISION | DATE PLOTTED => 20-DEC-2013
12-16-13 | TIME PLOTTED => 10:15

BORDER LAST REVISED 7/2/2010
USERNAME => s110420
DGN FILE => 0800000146na008.dgn
RELATIVE BORDER SCALE IS IN INCHES 0 1 2 3
UNIT 2285
PROJECT NUMBER & PHASE 08000001461

Dist	COUNTY	ROUTE	POST MILES TOTAL PROJECT	SHEET No.	TOTAL SHEETS
08	SBd	247	1.8/9.6	133	196

M.M. Kamgar Haghighi 12-16-13
REGISTERED CIVIL ENGINEER DATE

12-16-13
PLANS APPROVAL DATE

REGISTERED PROFESSIONAL ENGINEER
M.KAMGAR
No. C58039
Exp 6-30-14
CIVIL
STATE OF CALIFORNIA

THE STATE OF CALIFORNIA OR ITS OFFICERS OR AGENTS SHALL NOT BE RESPONSIBLE FOR THE ACCURACY OR COMPLETENESS OF SCANNED COPIES OF THIS PLAN SHEET.

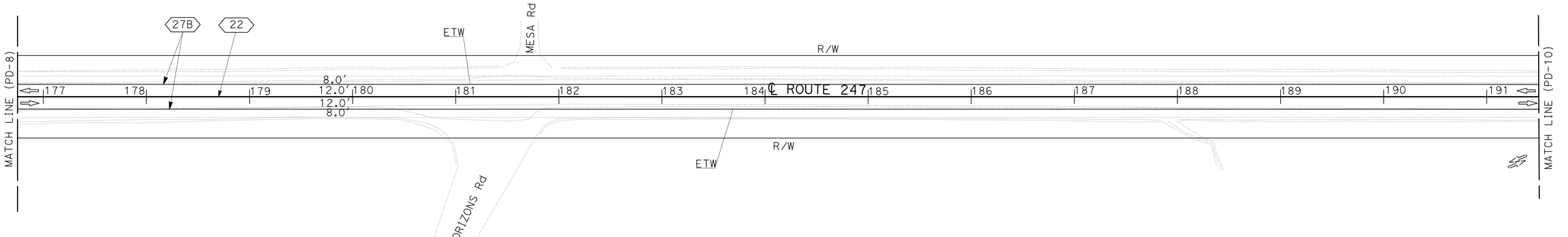

APPROVED FOR PAVEMENT DELINEATION AND SIGN WORK ONLY

PAVEMENT DELINEATION & SIGNING

SCALE: 1" = 50'

PD-9

CALCULATED-DESIGNED BY: MEHDI KAMGAR
CHECKED BY: D.NAMI
FUNCTIONAL SUPERVISOR: BILL WASSER
REVISED BY
DATE REVISED

STATE OF CALIFORNIA - DEPARTMENT OF TRANSPORTATION
Caltrans®
TRAFFIC DESIGN

LAST REVISION 12-16-13
DATE PLOTTED => 20-DEC-2013
TIME PLOTTED => 10:15

BORDER LAST REVISED 7/2/2010
USERNAME => s110420
DGN FILE => 0800000146na009.dgn
RELATIVE BORDER SCALE IS IN INCHES 0 1 2 3
UNIT 2285
PROJECT NUMBER & PHASE 08000001461

Dist	COUNTY	ROUTE	POST MILES TOTAL PROJECT	SHEET No.	TOTAL SHEETS
08	SBd	247	1.8/9.6	134	196

M.M. Kamgar Haghighi 12-16-13
REGISTERED CIVIL ENGINEER DATE

12-16-13
PLANS APPROVAL DATE

REGISTERED PROFESSIONAL ENGINEER
M.KAMGAR
No. C58039
Exp 6-30-14
CIVIL
STATE OF CALIFORNIA

THE STATE OF CALIFORNIA OR ITS OFFICERS OR AGENTS SHALL NOT BE RESPONSIBLE FOR THE ACCURACY OR COMPLETENESS OF SCANNED COPIES OF THIS PLAN SHEET.

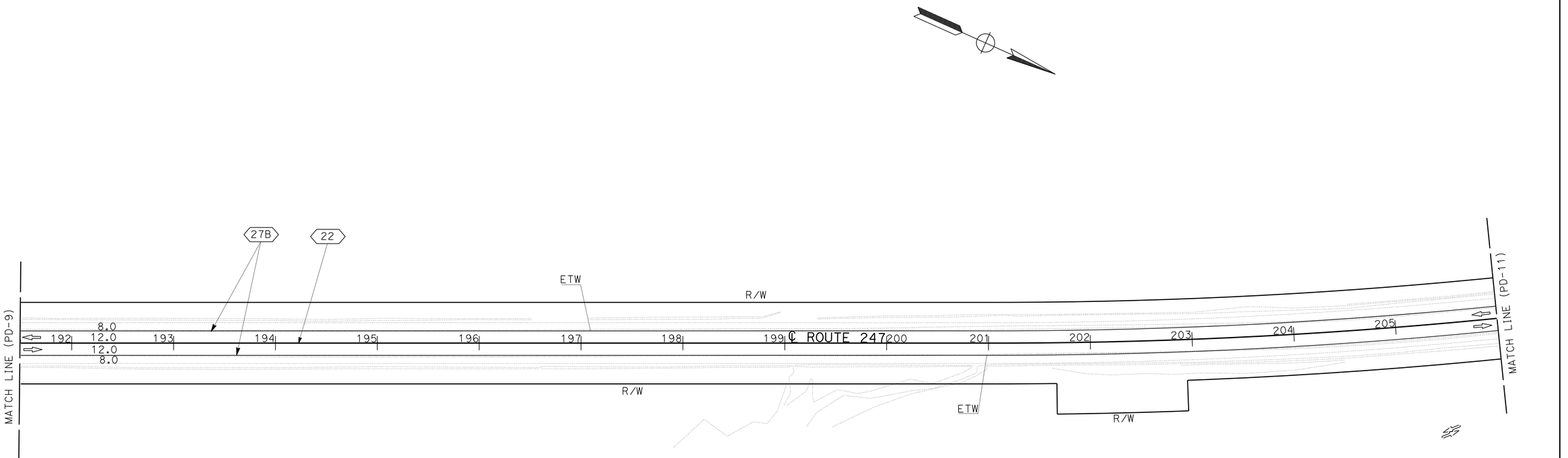

APPROVED FOR PAVEMENT DELINEATION AND SIGN WORK ONLY

PAVEMENT DELINEATION & SIGNING

SCALE: 1" = 50'

PD-10

STATE OF CALIFORNIA - DEPARTMENT OF TRANSPORTATION
Caltrans®
TRAFFIC DESIGN

FUNCTIONAL SUPERVISOR: BILL WASSER

CALCULATED-DESIGNED BY: MEHDI KAMGAR
CHECKED BY: D.NAMI

REVISED BY
DATE REVISED

LAST REVISION
DATE PLOTTED => 20-DEC-2013
TIME PLOTTED => 10:15
12-16-13

BORDER LAST REVISED 7/2/2010

USERNAME => s110420
DGN FILE => 0800000146na010.dgn

RELATIVE BORDER SCALE IS IN INCHES 0 1 2 3

UNIT 2285

PROJECT NUMBER & PHASE 08000001461

Dist	COUNTY	ROUTE	POST MILES TOTAL PROJECT	SHEET No.	TOTAL SHEETS
08	SBd	247	1.8/9.6	135	196

M.M. Kamgar Haghighi 12-16-13
REGISTERED CIVIL ENGINEER DATE

12-16-13
PLANS APPROVAL DATE

REGISTERED PROFESSIONAL ENGINEER
M.KAMGAR
No. C58039
Exp 6-30-14
CIVIL
STATE OF CALIFORNIA

THE STATE OF CALIFORNIA OR ITS OFFICERS OR AGENTS SHALL NOT BE RESPONSIBLE FOR THE ACCURACY OR COMPLETENESS OF SCANNED COPIES OF THIS PLAN SHEET.

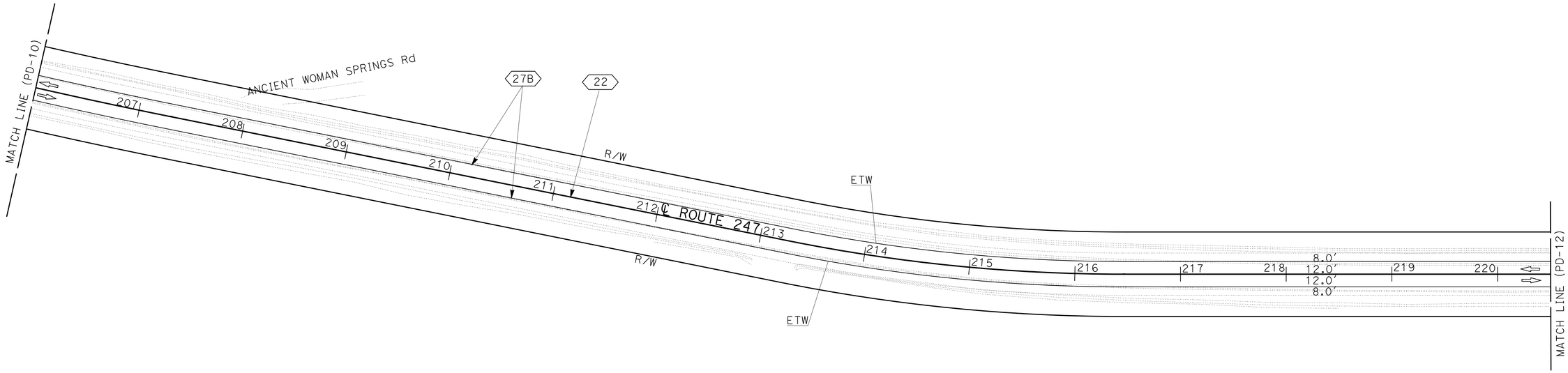

PAVEMENT DELINEATION & SIGNING

SCALE: 1" = 50'

PD-11

APPROVED FOR PAVEMENT DELINEATION AND SIGN WORK ONLY

STATE OF CALIFORNIA - DEPARTMENT OF TRANSPORTATION
Caltrans®
TRAFFIC DESIGN

FUNCTIONAL SUPERVISOR: BILL WASSER
CALCULATED-DESIGNED BY:
CHECKED BY:
REVISED BY: MEHDI KAMGAR
DATE REVISED: D.NAMI

LAST REVISION | DATE PLOTTED => 20-DEC-2013
12-16-13 | TIME PLOTTED => 10:15

BORDER LAST REVISED 7/2/2010
USERNAME => s110420
DGN FILE => 0800000146na011.dgn
RELATIVE BORDER SCALE IS IN INCHES 0 1 2 3
UNIT 2285
PROJECT NUMBER & PHASE 08000001461

Dist	COUNTY	ROUTE	POST MILES TOTAL PROJECT	SHEET No.	TOTAL SHEETS
08	SBd	247	1.8/9.6	136	196

M.M. Kamgar Haghighi 12-16-13
REGISTERED CIVIL ENGINEER DATE

12-16-13
PLANS APPROVAL DATE

M.M.KAMGAR No. C58039 Exp 6-30-14 CIVIL — REGISTERED PROFESSIONAL ENGINEER — STATE OF CALIFORNIA

THE STATE OF CALIFORNIA OR ITS OFFICERS OR AGENTS SHALL NOT BE RESPONSIBLE FOR THE ACCURACY OR COMPLETENESS OF SCANNED COPIES OF THIS PLAN SHEET.

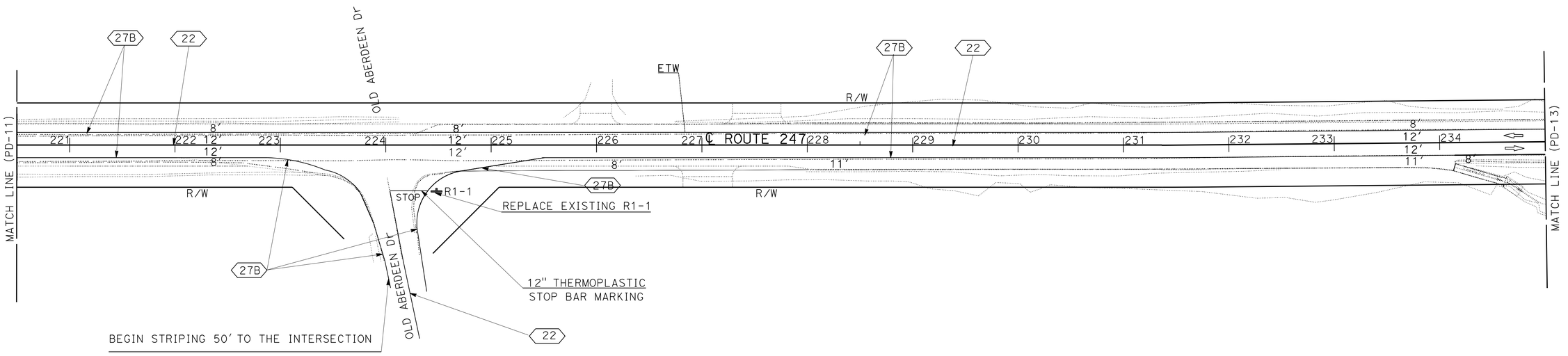

CALCULATED-DESIGNED BY: MEHDI KAMGAR
CHECKED BY: D.NAMI
REVISED BY
DATE REVISED
FUNCTIONAL SUPERVISOR: BILL WASSER

STATE OF CALIFORNIA - DEPARTMENT OF TRANSPORTATION
Caltrans®
TRAFFIC DESIGN

APPROVED FOR PAVEMENT DELINEATION AND SIGN WORK ONLY

PAVEMENT DELINEATION & SIGNING

SCALE: 1" = 50′

P-12

LAST REVISION | DATE PLOTTED => 20-DEC-2013
12-16-13 | TIME PLOTTED => 10:15

Dist	COUNTY	ROUTE	POST MILES TOTAL PROJECT	SHEET No.	TOTAL SHEETS
08	SBd	247	1.8/9.6	137	196

M.M. Kamgar Haghighi 12-16-13
REGISTERED CIVIL ENGINEER DATE

12-16-13
PLANS APPROVAL DATE

THE STATE OF CALIFORNIA OR ITS OFFICERS OR AGENTS SHALL NOT BE RESPONSIBLE FOR THE ACCURACY OR COMPLETENESS OF SCANNED COPIES OF THIS PLAN SHEET.

REGISTERED PROFESSIONAL ENGINEER
M.KAMGAR
No. C58039
Exp 6-30-14
CIVIL
STATE OF CALIFORNIA

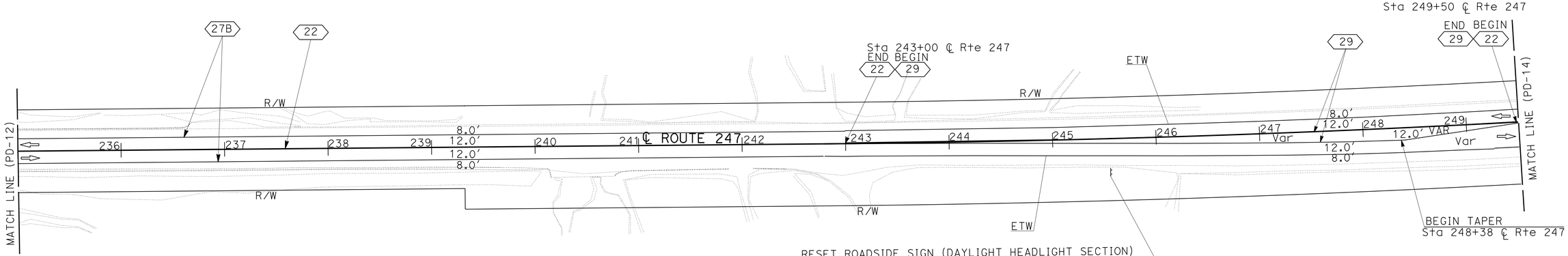

PAVEMENT DELINEATION AND SIGNING

SCALE: 1" = 50′

PD-13

APPROVED FOR PAVEMENT DELINEATION AND SIGN WORK ONLY

STATE OF CALIFORNIA - DEPARTMENT OF TRANSPORTATION
Caltrans® TRAFFIC DESIGN
FUNCTIONAL SUPERVISOR: BILL WASSER
CALCULATED-DESIGNED BY: MEHDI KAMGAR
CHECKED BY: D.NAMI
REVISED BY
DATE REVISED

LAST REVISION 12-16-13
DATE PLOTTED => 20-DEC-2013
TIME PLOTTED => 10:15

BORDER LAST REVISED 7/2/2010
USERNAME => s110420
DGN FILE => 0800000146na013.dgn
RELATIVE BORDER SCALE IS IN INCHES 0 1 2 3
UNIT 2285
PROJECT NUMBER & PHASE 08000001461

Dist	COUNTY	ROUTE	POST MILES TOTAL PROJECT	SHEET No.	TOTAL SHEETS
08	SBd	247	1.8/9.6	138	196

M.M. Kamgar Haghighi 12-16-13
REGISTERED CIVIL ENGINEER DATE

12-16-13
PLANS APPROVAL DATE

M.KAMGAR No. C58039 Exp 6-30-14 CIVIL — REGISTERED PROFESSIONAL ENGINEER — STATE OF CALIFORNIA

THE STATE OF CALIFORNIA OR ITS OFFICERS OR AGENTS SHALL NOT BE RESPONSIBLE FOR THE ACCURACY OR COMPLETENESS OF SCANNED COPIES OF THIS PLAN SHEET.

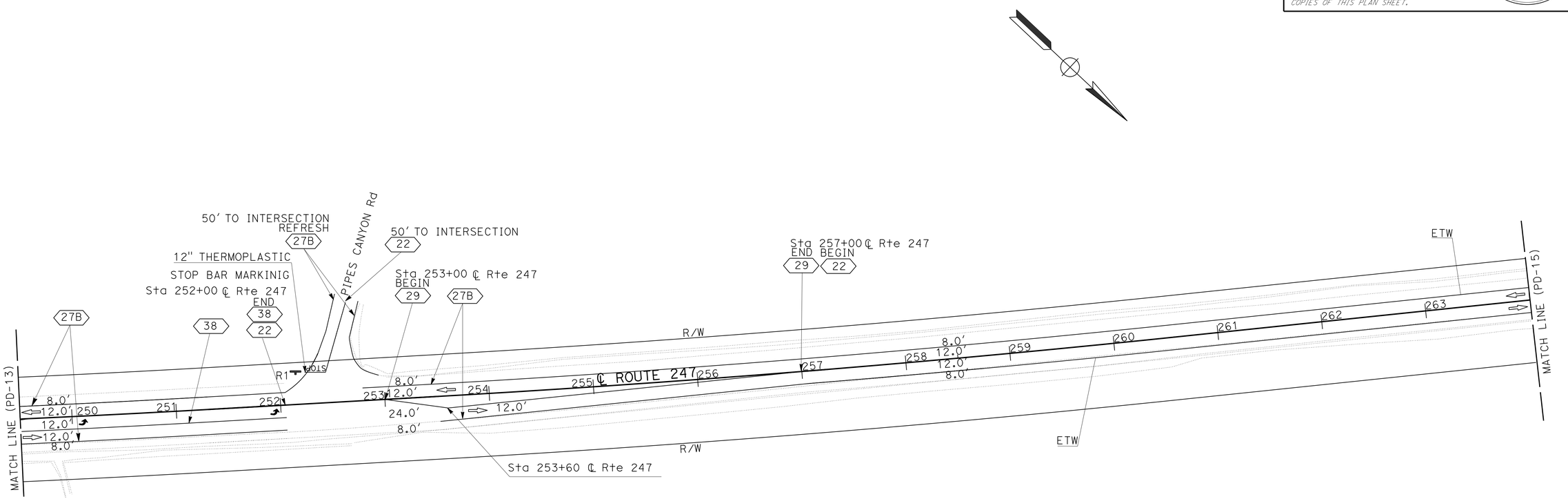

APPROVED FOR PAVEMENT DELINEATION AND SIGN WORK ONLY

PAVEMENT DELINEATION & SIGNING

SCALE: 1" = 50'

PD-14

STATE OF CALIFORNIA - DEPARTMENT OF TRANSPORTATION
Caltrans® TRAFFIC DESIGN

FUNCTIONAL SUPERVISOR: BILL WASSER
CALCULATED-DESIGNED BY: MEHDI KAMGAR
CHECKED BY: D.NAMI
REVISED BY
DATE REVISED

LAST REVISION
DATE PLOTTED => 20-DEC-2013
TIME PLOTTED => 10:15
12-16-13

BORDER LAST REVISED 7/2/2010
USERNAME => s110420
DGN FILE => 0800000146na014.dgn
RELATIVE BORDER SCALE IS IN INCHES 0 1 2 3
UNIT 2285
PROJECT NUMBER & PHASE 08000001461

Dist	COUNTY	ROUTE	POST MILES TOTAL PROJECT	SHEET No.	TOTAL SHEETS
08	SBd	247	1.8/9.6	139	196

M.M. Kamgar Haghighi 12-16-13
REGISTERED CIVIL ENGINEER DATE

12-16-13
PLANS APPROVAL DATE

REGISTERED PROFESSIONAL ENGINEER
M.KAMGAR
No. C58039
Exp 6-30-14
CIVIL
STATE OF CALIFORNIA

THE STATE OF CALIFORNIA OR ITS OFFICERS OR AGENTS SHALL NOT BE RESPONSIBLE FOR THE ACCURACY OR COMPLETENESS OF SCANNED COPIES OF THIS PLAN SHEET.

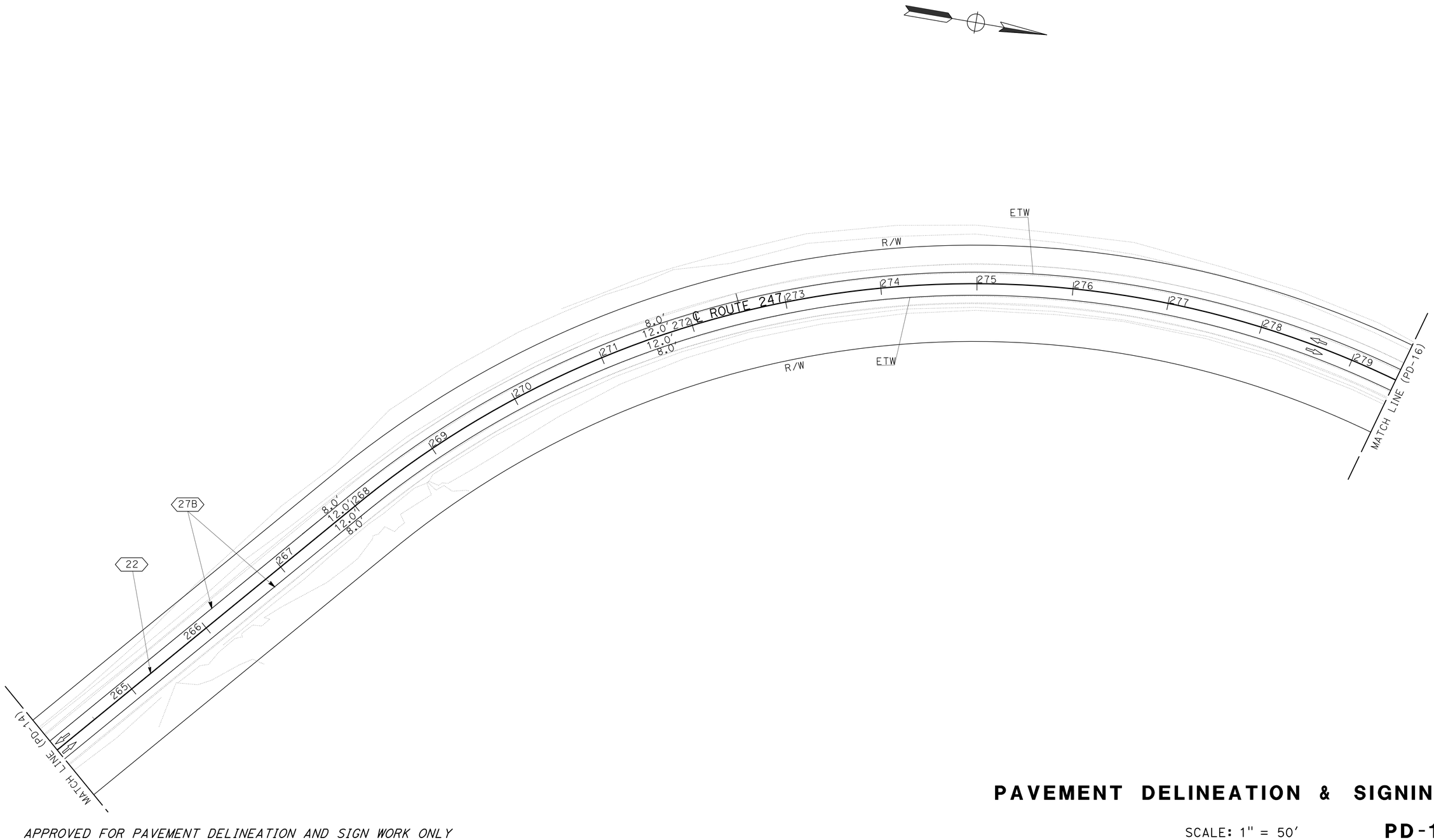

APPROVED FOR PAVEMENT DELINEATION AND SIGN WORK ONLY

PAVEMENT DELINEATION & SIGNING

SCALE: 1" = 50'

PD-15

STATE OF CALIFORNIA - DEPARTMENT OF TRANSPORTATION
Caltrans® TRAFFIC DESIGN

FUNCTIONAL SUPERVISOR: BILL WASSER

CALCULATED-DESIGNED BY: MEHDI KAMGAR
CHECKED BY: D.NAMI

REVISED BY
DATE REVISED

LAST REVISION | DATE PLOTTED => 20-DEC-2013
12-16-13 | TIME PLOTTED => 10:15

BORDER LAST REVISED 7/2/2010

USERNAME => s110420
DGN FILE => 0800000146na015.dgn

RELATIVE BORDER SCALE IS IN INCHES 0 1 2 3

UNIT 2285

PROJECT NUMBER & PHASE 08000001461

Dist	COUNTY	ROUTE	POST MILES TOTAL PROJECT	SHEET No.	TOTAL SHEETS
08	SBd	247	1.8/9.6	140	196

M.M. Kamgar Haghighi 12-16-13
REGISTERED CIVIL ENGINEER DATE

12-16-13
PLANS APPROVAL DATE

REGISTERED PROFESSIONAL ENGINEER
M.KAMGAR
No. C58039
Exp 6-30-14
CIVIL
STATE OF CALIFORNIA

THE STATE OF CALIFORNIA OR ITS OFFICERS OR AGENTS SHALL NOT BE RESPONSIBLE FOR THE ACCURACY OR COMPLETENESS OF SCANNED COPIES OF THIS PLAN SHEET.

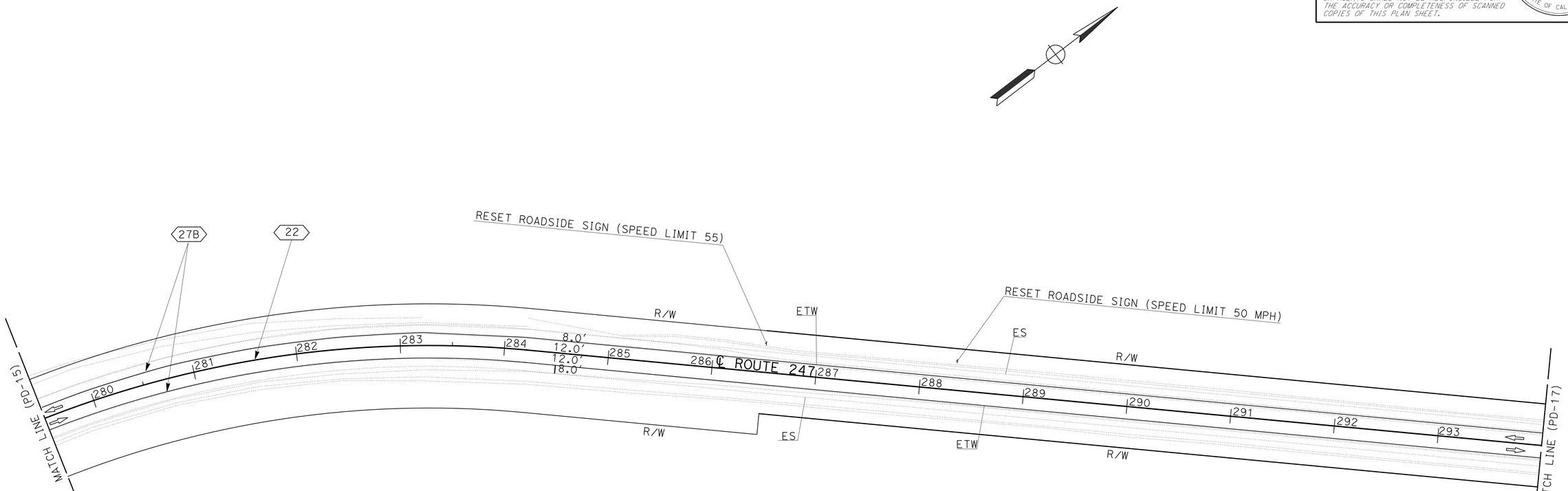

APPROVED FOR PAVEMENT DELINEATION AND SIGN WORK ONLY

PAVEMENT DELINEATION & SIGNING

SCALE: 1" = 50'

PD-16

REVISED BY | DATE REVISED
CALCULATED-DESIGNED BY: MEHDI KAMGAR
CHECKED BY: D.NAMI
FUNCTIONAL SUPERVISOR: BILL WASSER

STATE OF CALIFORNIA - DEPARTMENT OF TRANSPORTATION
Caltrans
TRAFFIC DESIGN

LAST REVISION | DATE PLOTTED => 20-DEC-2013
12-16-13 | TIME PLOTTED => 10:15

BORDER LAST REVISED 7/2/2010

USERNAME => s110420
DGN FILE => 0800000146na016.dgn

RELATIVE BORDER SCALE IS IN INCHES 0 1 2 3

UNIT 2285

PROJECT NUMBER & PHASE 08000001461

Dist	COUNTY	ROUTE	POST MILES TOTAL PROJECT	SHEET No.	TOTAL SHEETS
08	SBd	247	1.8/9.6	141	196

M.M. Kamgar Haghighi 12-16-13
REGISTERED CIVIL ENGINEER DATE

12-16-13
PLANS APPROVAL DATE

REGISTERED PROFESSIONAL ENGINEER
M. KAMGAR
No. C58039
Exp 6-30-14
CIVIL
STATE OF CALIFORNIA

THE STATE OF CALIFORNIA OR ITS OFFICERS OR AGENTS SHALL NOT BE RESPONSIBLE FOR THE ACCURACY OR COMPLETENESS OF SCANNED COPIES OF THIS PLAN SHEET.

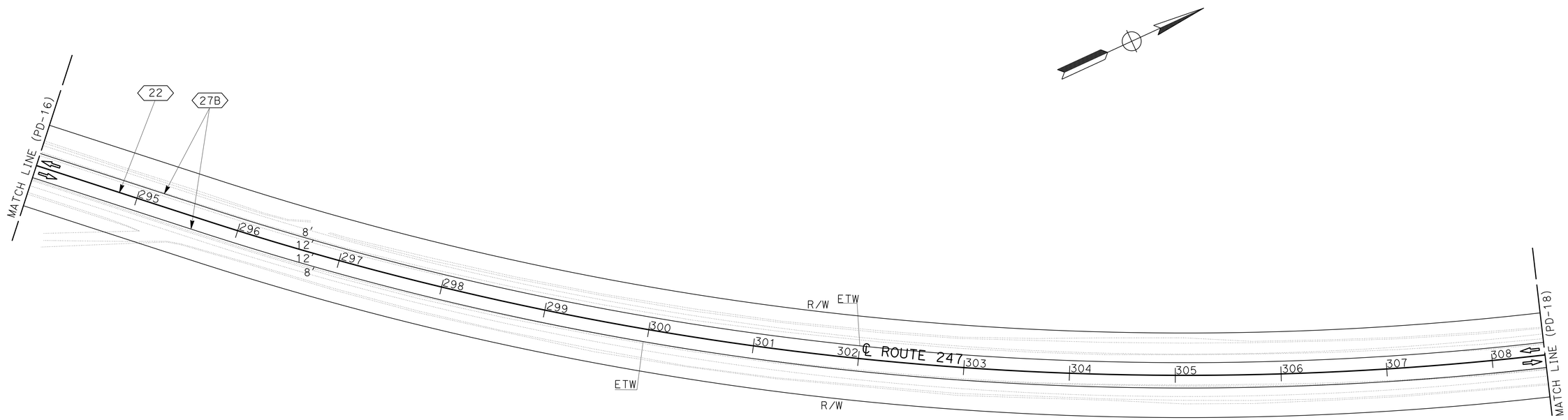

APPROVED FOR PAVEMENT DELINEATION AND SIGN WORK ONLY

PAVEMENT DELINEATION & SIGNING

SCALE: 1" = 50'

PD-17

STATE OF CALIFORNIA - DEPARTMENT OF TRANSPORTATION
Caltrans®
TRAFFIC DESIGN

FUNCTIONAL SUPERVISOR: BILL WASSER
CALCULATED-DESIGNED BY:
CHECKED BY:
REVISED BY:
DATE REVISED:
MEHDI KAMGAR
D. NAMI

LAST REVISION
DATE PLOTTED => 20-DEC-2013
TIME PLOTTED => 10:15
12-16-13

BORDER LAST REVISED 7/2/2010
USERNAME => s110420
DGN FILE => 0800000146na017.dgn
RELATIVE BORDER SCALE IS IN INCHES 0 1 2 3
UNIT 2237
PROJECT NUMBER & PHASE 08000001461

Dist	COUNTY	ROUTE	POST MILES TOTAL PROJECT	SHEET No.	TOTAL SHEETS
08	SBd	247	1.8/9.6	142	196

M.M. Kamgar Haghighi 12-16-13
REGISTERED CIVIL ENGINEER DATE

12-16-13
PLANS APPROVAL DATE

REGISTERED PROFESSIONAL ENGINEER
M.KAMGAR
No. C58039
Exp 6-30-14
CIVIL
STATE OF CALIFORNIA

THE STATE OF CALIFORNIA OR ITS OFFICERS OR AGENTS SHALL NOT BE RESPONSIBLE FOR THE ACCURACY OR COMPLETENESS OF SCANNED COPIES OF THIS PLAN SHEET.

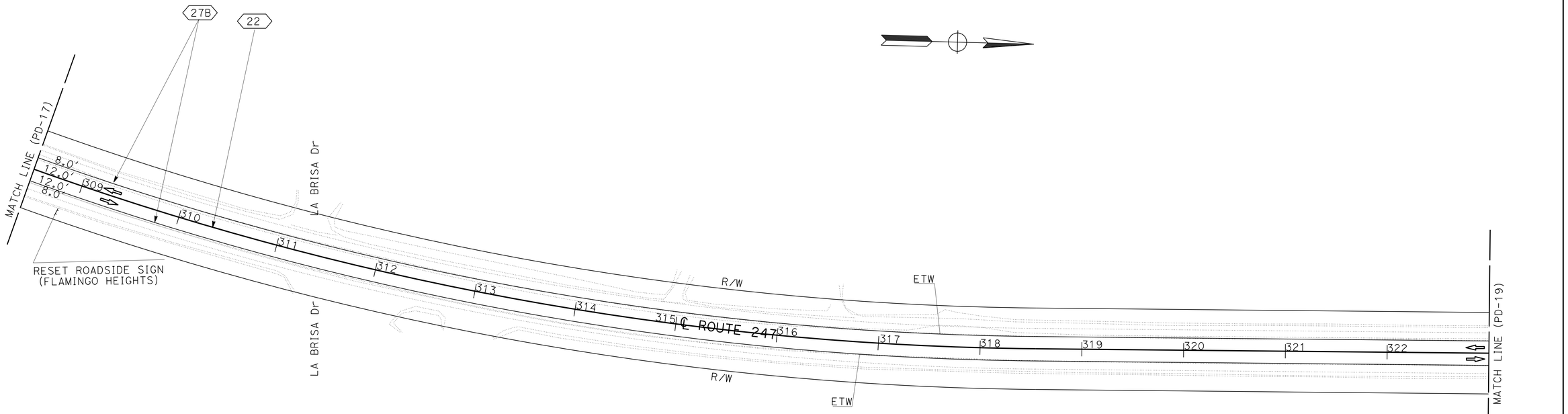

APPROVED FOR PAVEMENT DELINEATION AND SIGN WORK ONLY

PAVEMENT DELINEATION & SIGNING

SCALE: 1" = 50'

PD-18

STATE OF CALIFORNIA - DEPARTMENT OF TRANSPORTATION
Caltrans® TRAFFIC DESIGN

FUNCTIONAL SUPERVISOR: BILL WASSER

CALCULATED-DESIGNED BY: MEHDI KAMGAR
CHECKED BY: D.NAMI

REVISED BY
DATE REVISED

LAST REVISION
DATE PLOTTED => 20-DEC-2013
TIME PLOTTED => 10:15
12-16-13

BORDER LAST REVISED 7/2/2010

USERNAME => s110420
DGN FILE => 0800000146na018.dgn

RELATIVE BORDER SCALE IS IN INCHES 0 1 2 3

UNIT 2285

PROJECT NUMBER & PHASE 08000001461

Dist	COUNTY	ROUTE	POST MILES TOTAL PROJECT	SHEET No.	TOTAL SHEETS
08	SBd	247	1.8/9.6	143	196

M.M. Kamgar Haghighi 12-16-13
REGISTERED CIVIL ENGINEER DATE

12-16-13
PLANS APPROVAL DATE

REGISTERED PROFESSIONAL ENGINEER
M.KAMGAR
No. C58039
Exp 6-30-14
CIVIL
STATE OF CALIFORNIA

THE STATE OF CALIFORNIA OR ITS OFFICERS OR AGENTS SHALL NOT BE RESPONSIBLE FOR THE ACCURACY OR COMPLETENESS OF SCANNED COPIES OF THIS PLAN SHEET.

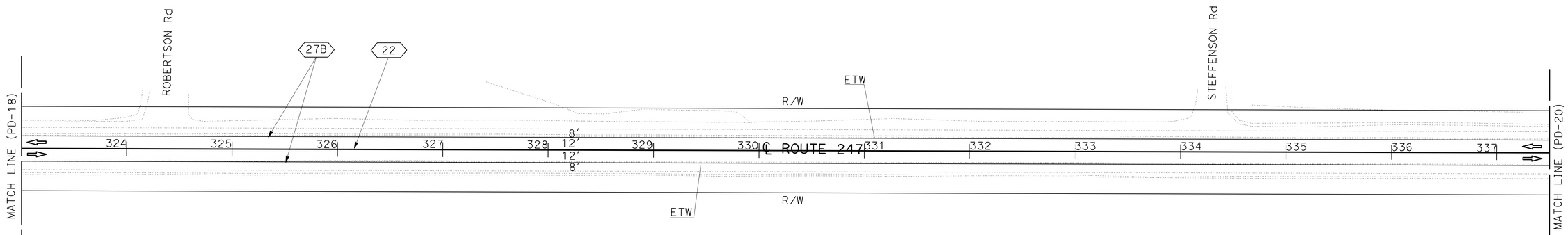

APPROVED FOR PAVEMENT DELINEATION AND SIGN WORK ONLY

PAVEMENT DELINEATION & SIGNING

SCALE: 1" = 50′

PD-19

REVISED BY | DATE REVISED

CALCULATED-DESIGNED BY: MEHDI KAMGAR
CHECKED BY: D.NAMI

FUNCTIONAL SUPERVISOR: BILL WASSER

STATE OF CALIFORNIA - DEPARTMENT OF TRANSPORTATION
Caltrans
TRAFFIC DESIGN

LAST REVISION | DATE PLOTTED => 20-DEC-2013
12-16-13 | TIME PLOTTED => 10:16

BORDER LAST REVISED 7/2/2010 | USERNAME => s110420 | DGN FILE => 0800000146na019.dgn | RELATIVE BORDER SCALE IS IN INCHES 0 1 2 3 | UNIT 2285 | PROJECT NUMBER & PHASE 08000001461

Dist	COUNTY	ROUTE	POST MILES TOTAL PROJECT	SHEET No.	TOTAL SHEETS
08	SBd	247	1.8/9.6	144	196

M.M. Kamgar Haghighi 12-16-13
REGISTERED CIVIL ENGINEER DATE

12-16-13
PLANS APPROVAL DATE

THE STATE OF CALIFORNIA OR ITS OFFICERS OR AGENTS SHALL NOT BE RESPONSIBLE FOR THE ACCURACY OR COMPLETENESS OF SCANNED COPIES OF THIS PLAN SHEET.

REGISTERED PROFESSIONAL ENGINEER
M.KAMGAR
No. C58039
Exp 6-30-14
CIVIL
STATE OF CALIFORNIA

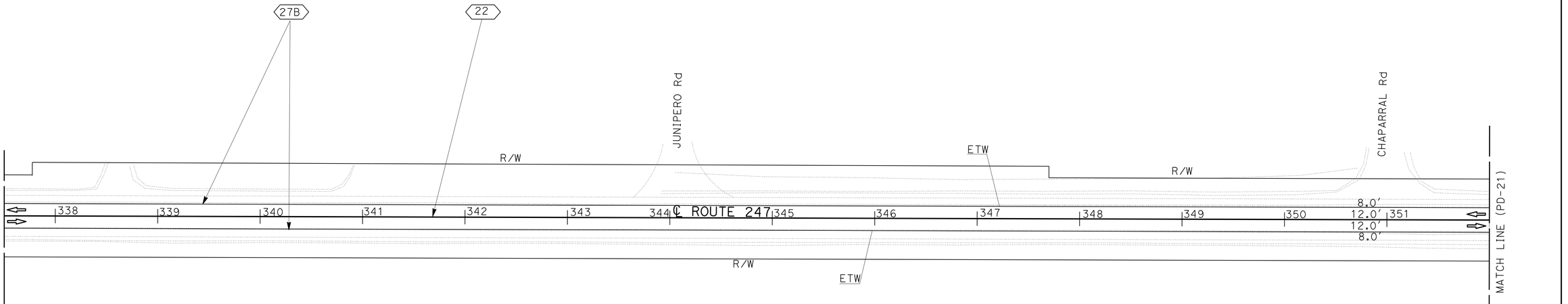

APPROVED FOR PAVEMENT DELINEATION AND SIGN WORK ONLY

PAVEMENT DELINEATION & SIGNING

SCALE: 1" = 50'

PD-20

REVISED BY | DATE REVISED
CALCULATED-DESIGNED BY: MEHDI KAMGAR
CHECKED BY: D.NAMI
FUNCTIONAL SUPERVISOR: BILL WASSER
STATE OF CALIFORNIA - DEPARTMENT OF TRANSPORTATION
Caltrans® TRAFFIC DESIGN

LAST REVISION 12-16-13 | DATE PLOTTED => 20-DEC-2013 | TIME PLOTTED => 10:16

BORDER LAST REVISED 7/2/2010 | USERNAME => s110420 | DGN FILE => 0800000146na020.dgn | RELATIVE BORDER SCALE IS IN INCHES 0 1 2 3 | UNIT 2285 | PROJECT NUMBER & PHASE 08000001461

Dist	COUNTY	ROUTE	POST MILES TOTAL PROJECT	SHEET No.	TOTAL SHEETS
08	SBd	247	1.8/9.6	145	196

M.M. Kamgar Haghighi 12-16-13
REGISTERED CIVIL ENGINEER DATE

12-16-13
PLANS APPROVAL DATE

REGISTERED PROFESSIONAL ENGINEER
M.KAMGAR
No. C58039
Exp 6-30-14
CIVIL
STATE OF CALIFORNIA

THE STATE OF CALIFORNIA OR ITS OFFICERS OR AGENTS SHALL NOT BE RESPONSIBLE FOR THE ACCURACY OR COMPLETENESS OF SCANNED COPIES OF THIS PLAN SHEET.

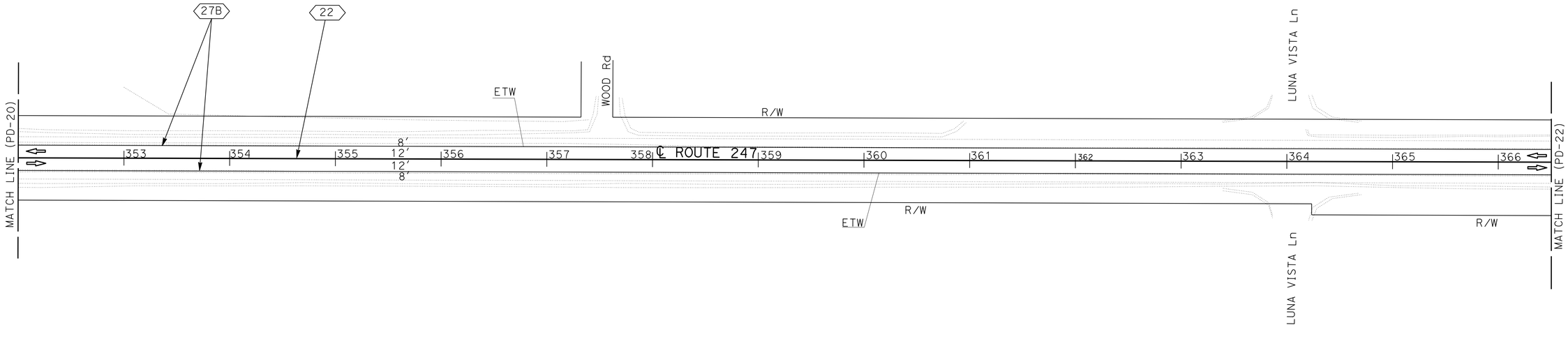

APPROVED FOR PAVEMENT DELINEATION AND SIGN WORK ONLY

PAVEMENT DELINEATION & SIGNING

SCALE: 1" = 50'

PD-21

REVISED BY	
DATE REVISED	
CALCULATED-DESIGNED BY	MEHDI KAMGAR
CHECKED BY	D.NAMI
FUNCTIONAL SUPERVISOR	BILL WASSER

STATE OF CALIFORNIA - DEPARTMENT OF TRANSPORTATION
Caltrans® TRAFFIC DESIGN

LAST REVISION | DATE PLOTTED => 20-DEC-2013
12-16-13 | TIME PLOTTED => 10:16

BORDER LAST REVISED 7/2/2010 | USERNAME => s110420 | DGN FILE => 0800000146na021.dgn | RELATIVE BORDER SCALE IS IN INCHES 0 1 2 3 | UNIT 2285 | PROJECT NUMBER & PHASE | 08000001461

Dist	COUNTY	ROUTE	POST MILES TOTAL PROJECT	SHEET No.	TOTAL SHEETS
08	SBd	247	1.8/9.6	146	196

M.M. Kamgar Hashighi 12-16-13
REGISTERED CIVIL ENGINEER DATE

12-16-13
PLANS APPROVAL DATE

REGISTERED PROFESSIONAL ENGINEER
M.KAMGAR
No. C58039
Exp 6-30-14
CIVIL
STATE OF CALIFORNIA

THE STATE OF CALIFORNIA OR ITS OFFICERS OR AGENTS SHALL NOT BE RESPONSIBLE FOR THE ACCURACY OR COMPLETENESS OF SCANNED COPIES OF THIS PLAN SHEET.

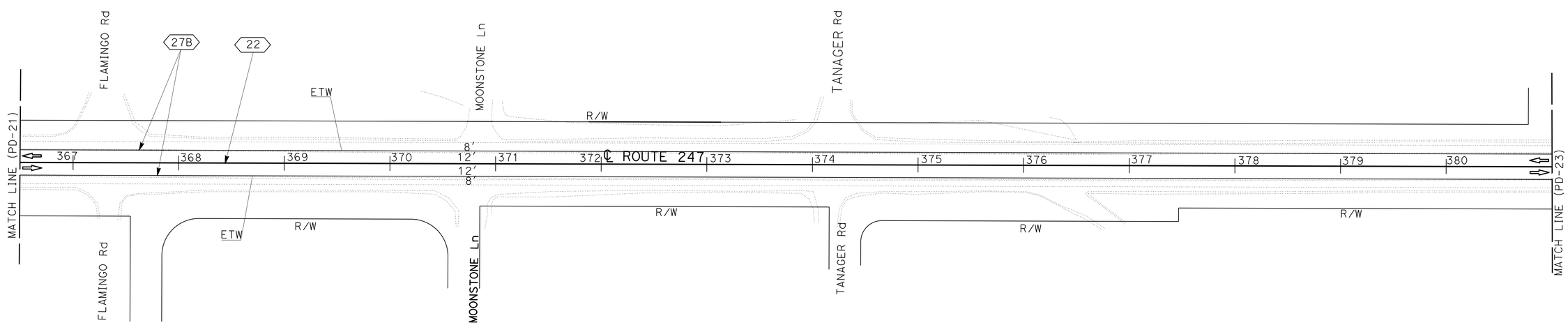

APPROVED FOR PAVEMENT DELINEATION AND SIGN WORK ONLY

PAVEMENT DELINEATION & SIGNING

SCALE: 1" = 50'

PD-22

STATE OF CALIFORNIA - DEPARTMENT OF TRANSPORTATION	
Caltrans® TRAFFIC DESIGN	
FUNCTIONAL SUPERVISOR	BILL WASSER
CALCULATED-DESIGNED BY	MEHDI KAMGAR
CHECKED BY	D.NAMI
REVISED BY	
DATE REVISED	

LAST REVISION
DATE PLOTTED => 20-DEC-2013
TIME PLOTTED => 10:16
12-16-13

BORDER LAST REVISED 7/2/2010
USERNAME => s110420
DGN FILE => 0800000146na022.dgn
RELATIVE BORDER SCALE IS IN INCHES 0 1 2 3
UNIT 2285
PROJECT NUMBER & PHASE 08000001461

Dist	COUNTY	ROUTE	POST MILES TOTAL PROJECT	SHEET No.	TOTAL SHEETS
08	SBd	247	1.8/9.6	147	196

M.M. Kamgar Hayghyan 12-16-13
REGISTERED CIVIL ENGINEER DATE

12-16-13
PLANS APPROVAL DATE

REGISTERED PROFESSIONAL ENGINEER
M.KAMGAR
No. C58039
Exp 6-30-14
CIVIL
STATE OF CALIFORNIA

THE STATE OF CALIFORNIA OR ITS OFFICERS OR AGENTS SHALL NOT BE RESPONSIBLE FOR THE ACCURACY OR COMPLETENESS OF SCANNED COPIES OF THIS PLAN SHEET.

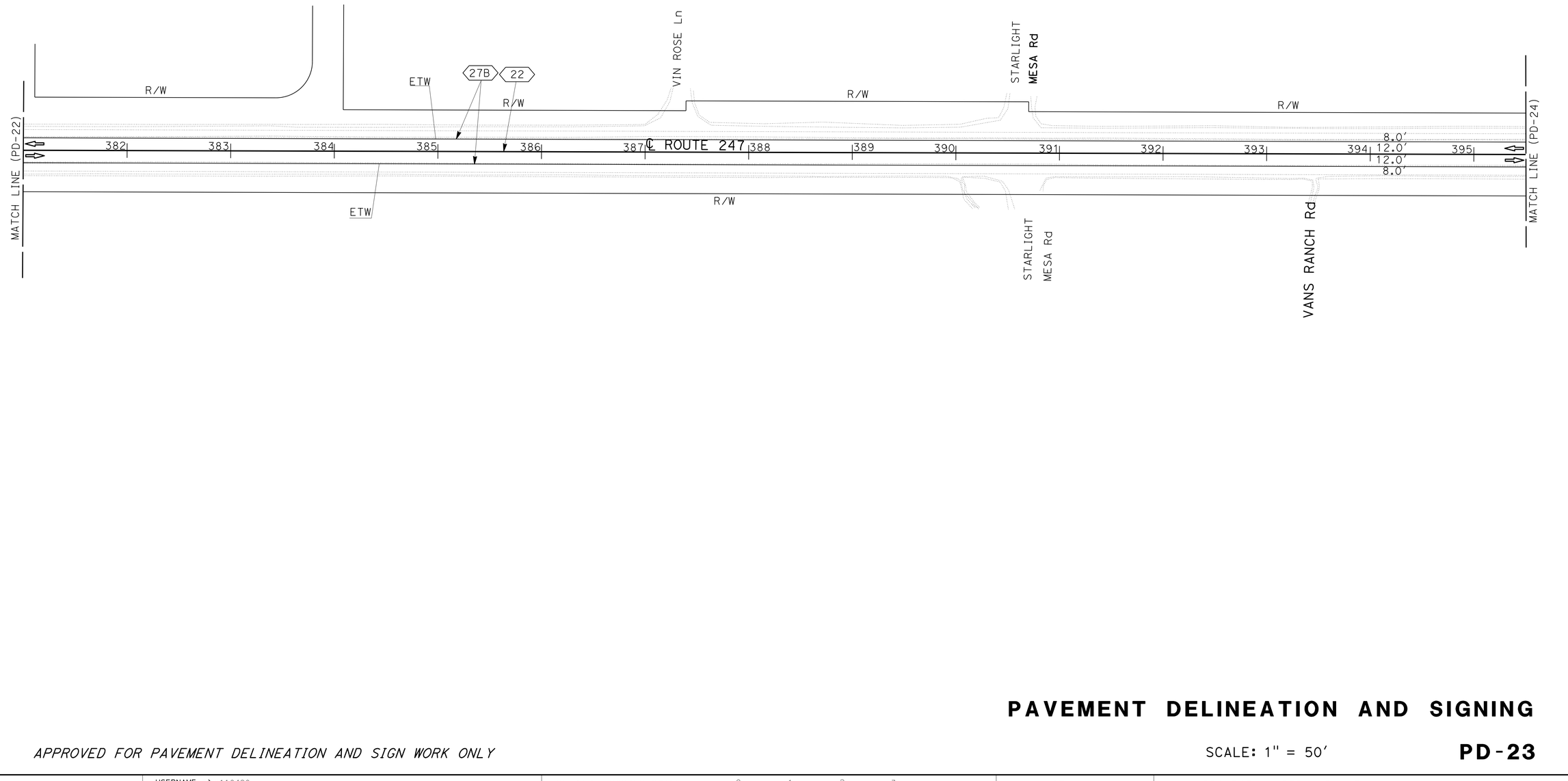

APPROVED FOR PAVEMENT DELINEATION AND SIGN WORK ONLY

PAVEMENT DELINEATION AND SIGNING

SCALE: 1" = 50′

PD-23

STATE OF CALIFORNIA - DEPARTMENT OF TRANSPORTATION
Caltrans® TRAFFIC DESIGN

FUNCTIONAL SUPERVISOR: BILL WASSER
CALCULATED-DESIGNED BY: MEHDI KAMGAR
CHECKED BY: D.NAMI
REVISED BY
DATE REVISED

LAST REVISION DATE PLOTTED => 20-DEC-2013
12-16-13 TIME PLOTTED => 10:16

BORDER LAST REVISED 7/2/2010
USERNAME => s110420
DGN FILE => 0800000146na023.dgn
RELATIVE BORDER SCALE IS IN INCHES 0 1 2 3
UNIT 2285
PROJECT NUMBER & PHASE 08000001461

Dist	COUNTY	ROUTE	POST MILES TOTAL PROJECT	SHEET No.	TOTAL SHEETS
08	SBd	247	1.8/9.6	148	196

M.M. Kamgar Haghighi 12-16-13
REGISTERED CIVIL ENGINEER DATE

12-16-13
PLANS APPROVAL DATE

REGISTERED PROFESSIONAL ENGINEER
M.KAMGAR
No. C58039
Exp 6-30-14
CIVIL
STATE OF CALIFORNIA

THE STATE OF CALIFORNIA OR ITS OFFICERS OR AGENTS SHALL NOT BE RESPONSIBLE FOR THE ACCURACY OR COMPLETENESS OF SCANNED COPIES OF THIS PLAN SHEET.

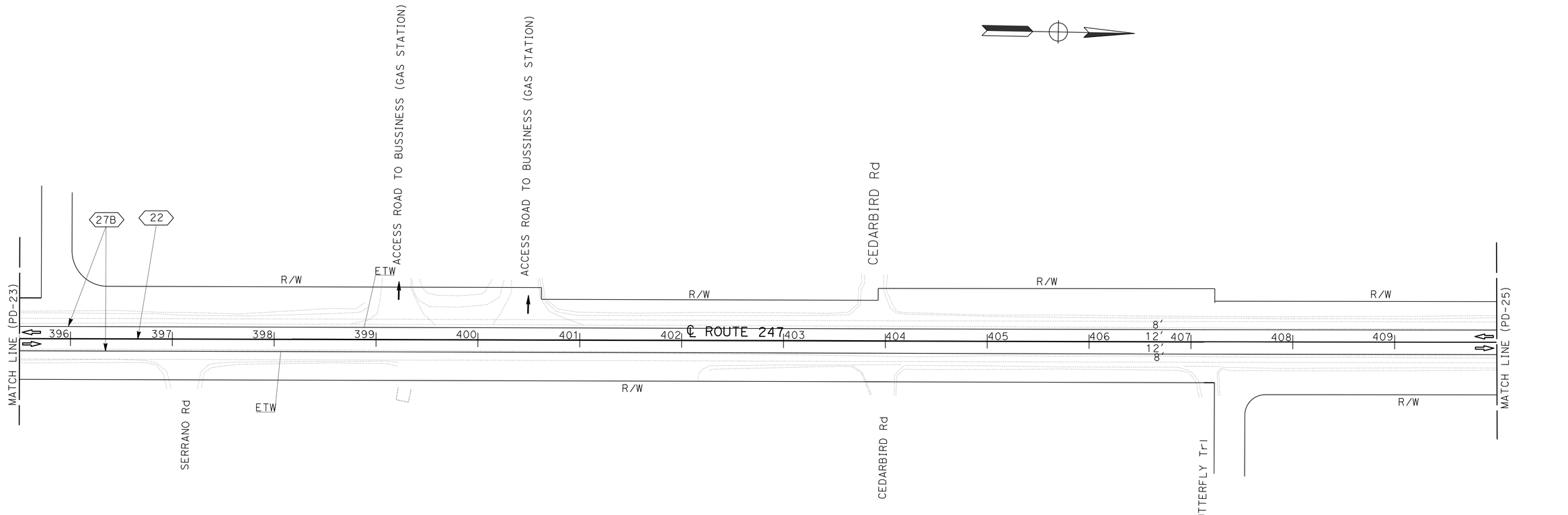

APPROVED FOR PAVEMENT DELINEATION AND SIGN WORK ONLY

PAVEMENT DELINEATION & SIGNING

SCALE: 1" = 50′

PD-24

STATE OF CALIFORNIA - DEPARTMENT OF TRANSPORTATION
Caltrans® TRAFFIC DESIGN
FUNCTIONAL SUPERVISOR: BILL WASSER
CALCULATED-DESIGNED BY: MEHDI KAMGAR
CHECKED BY: D.NAMI
REVISED BY
DATE REVISED

LAST REVISION | DATE PLOTTED => 20-DEC-2013
12-16-13 | TIME PLOTTED => 10:16

BORDER LAST REVISED 7/2/2010
USERNAME => s110420
DGN FILE => 0800000146na024.dgn
RELATIVE BORDER SCALE IS IN INCHES 0 1 2 3
UNIT 2285
PROJECT NUMBER & PHASE 08000001461

Dist	COUNTY	ROUTE	POST MILES TOTAL PROJECT	SHEET No.	TOTAL SHEETS
08	SBd	247	1.8/9.6	149	196

M.M. Kamgar Haghighi 12-16-13
REGISTERED CIVIL ENGINEER DATE

12-16-13
PLANS APPROVAL DATE

REGISTERED PROFESSIONAL ENGINEER
M.KAMGAR
No. C58039
Exp 6-30-14
CIVIL
STATE OF CALIFORNIA

THE STATE OF CALIFORNIA OR ITS OFFICERS OR AGENTS SHALL NOT BE RESPONSIBLE FOR THE ACCURACY OR COMPLETENESS OF SCANNED COPIES OF THIS PLAN SHEET.

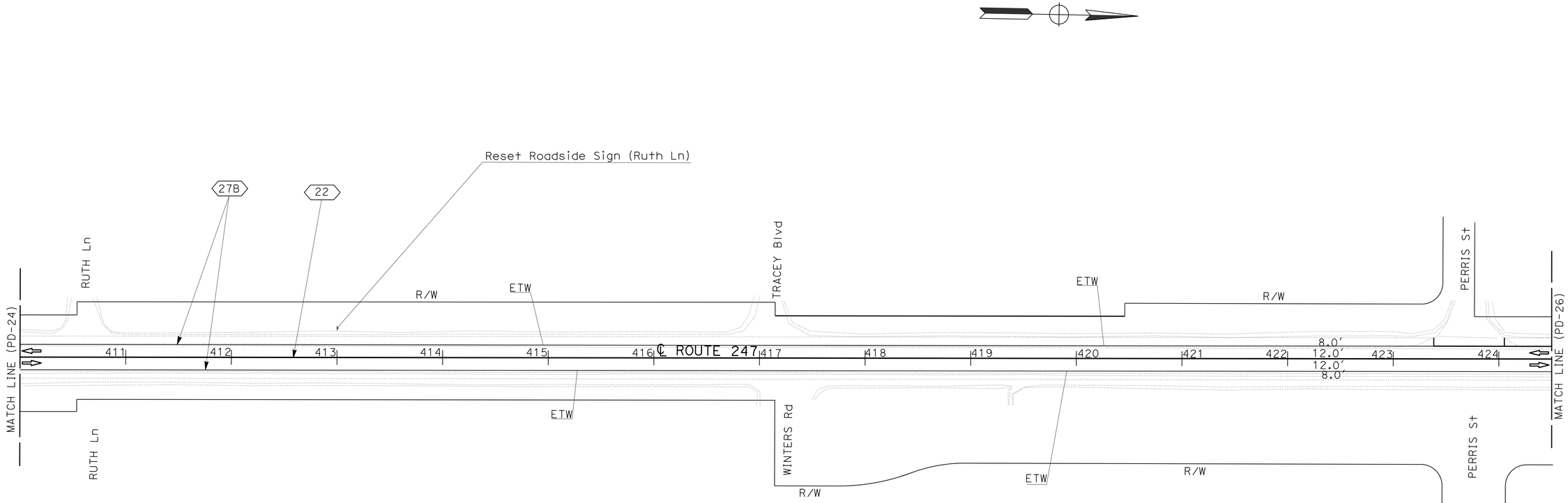

APPROVED FOR PAVEMENT DELINEATION AND SIGN WORK ONLY

PAVEMENT DELINEATION & SIGNING

SCALE: 1" = 50′

PD-25

REVISED BY | DATE REVISED
MEHDI KAMGAR | D.NAMI
CALCULATED-DESIGNED BY | CHECKED BY
FUNCTIONAL SUPERVISOR: BILL WASSER
STATE OF CALIFORNIA - DEPARTMENT OF TRANSPORTATION
Caltrans® TRAFFIC DESIGN

LAST REVISION | DATE PLOTTED => 20-DEC-2013
12-16-13 | TIME PLOTTED => 10:16

BORDER LAST REVISED 7/2/2010 | USERNAME => s110420 | DGN FILE => 0800000146na025.dgn | RELATIVE BORDER SCALE IS IN INCHES 0 1 2 3 | UNIT 2285 | PROJECT NUMBER & PHASE | 08000001461

Dist	COUNTY	ROUTE	POST MILES TOTAL PROJECT	SHEET No.	TOTAL SHEETS
08	SBd	247	1.8/9.6	150	196

M.M. Kamgar Haghighi 12-16-13
REGISTERED CIVIL ENGINEER DATE

12-16-13
PLANS APPROVAL DATE

REGISTERED PROFESSIONAL ENGINEER
M.KAMGAR
No. C58039
Exp. 6-30-14
CIVIL
STATE OF CALIFORNIA

THE STATE OF CALIFORNIA OR ITS OFFICERS OR AGENTS SHALL NOT BE RESPONSIBLE FOR THE ACCURACY OR COMPLETENESS OF SCANNED COPIES OF THIS PLAN SHEET.

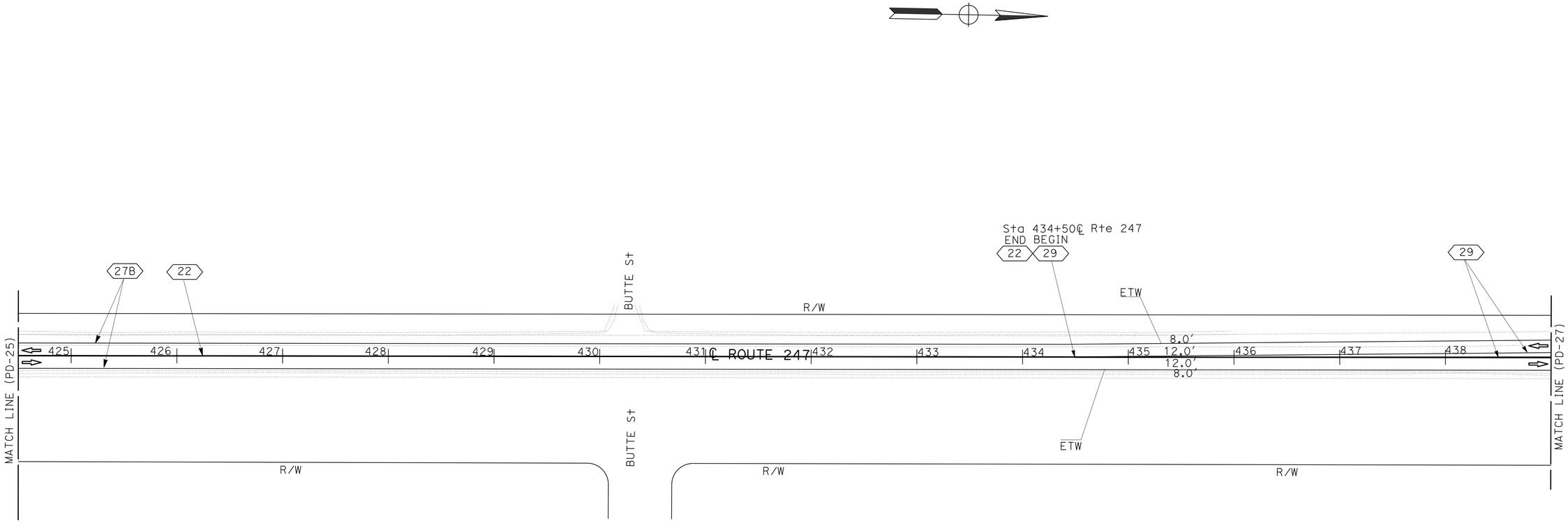

PAVEMENT DELINEATION & SIGNING

SCALE: 1" = 50'

PD-26

APPROVED FOR PAVEMENT DELINEATION AND SIGN WORK ONLY

STATE OF CALIFORNIA - DEPARTMENT OF TRANSPORTATION
Caltrans
TRAFFIC DESIGN

FUNCTIONAL SUPERVISOR: BILL WASSER
CALCULATED-DESIGNED BY: MEHDI KAMGAR
CHECKED BY: D.NAMI
REVISED BY
DATE REVISED

LAST REVISION 12-16-13
DATE PLOTTED => 20-DEC-2013
TIME PLOTTED => 10:16

Dist	COUNTY	ROUTE	POST MILES TOTAL PROJECT	SHEET No.	TOTAL SHEETS
08	SBd	247	1.8/9.6	151	196

M.M. Kamgar Haghighi 12-16-13
REGISTERED CIVIL ENGINEER DATE

12-16-13
PLANS APPROVAL DATE

REGISTERED PROFESSIONAL ENGINEER
M.KAMGAR
No. C58039
Exp 6-30-14
CIVIL
STATE OF CALIFORNIA

THE STATE OF CALIFORNIA OR ITS OFFICERS OR AGENTS SHALL NOT BE RESPONSIBLE FOR THE ACCURACY OR COMPLETENESS OF SCANNED COPIES OF THIS PLAN SHEET.

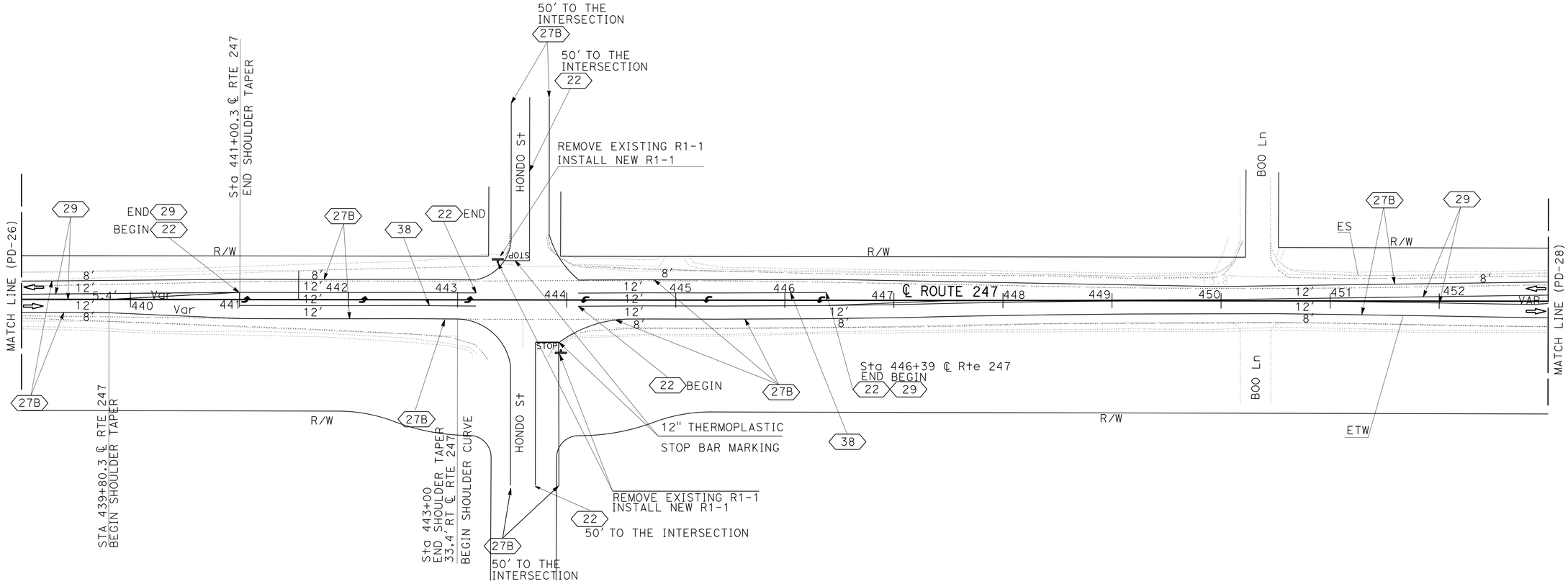

APPROVED FOR PAVEMENT DELINEATION AND SIGN WORK ONLY

PAVEMENT DELINEATION & SIGNING

SCALE: 1" = 50'

PD-27

CALCULATED-DESIGNED BY: MEHDI KAMGAR
CHECKED BY: D.NAMI
REVISED BY
DATE REVISED
FUNCTIONAL SUPERVISOR: BILL WASSER

STATE OF CALIFORNIA - DEPARTMENT OF TRANSPORTATION
Caltrans®
TRAFFIC DESIGN

LAST REVISION DATE PLOTTED => 20-DEC-2013
12-16-13 TIME PLOTTED => 10:16

BORDER LAST REVISED 7/2/2010
USERNAME => s110420
DGN FILE => 0800000146na027.dgn
RELATIVE BORDER SCALE IS IN INCHES 0 1 2 3
UNIT 2285
PROJECT NUMBER & PHASE 08000001461

Dist	COUNTY	ROUTE	POST MILES TOTAL PROJECT	SHEET No.	TOTAL SHEETS
08	SBd	247	1.8/9.6	152	196

M.M. Kamgar Haghighi 12-16-13
REGISTERED CIVIL ENGINEER DATE

12-16-13
PLANS APPROVAL DATE

M.KAMGAR No. C58039 Exp 6-30-14 CIVIL — REGISTERED PROFESSIONAL ENGINEER — STATE OF CALIFORNIA

THE STATE OF CALIFORNIA OR ITS OFFICERS OR AGENTS SHALL NOT BE RESPONSIBLE FOR THE ACCURACY OR COMPLETENESS OF SCANNED COPIES OF THIS PLAN SHEET.

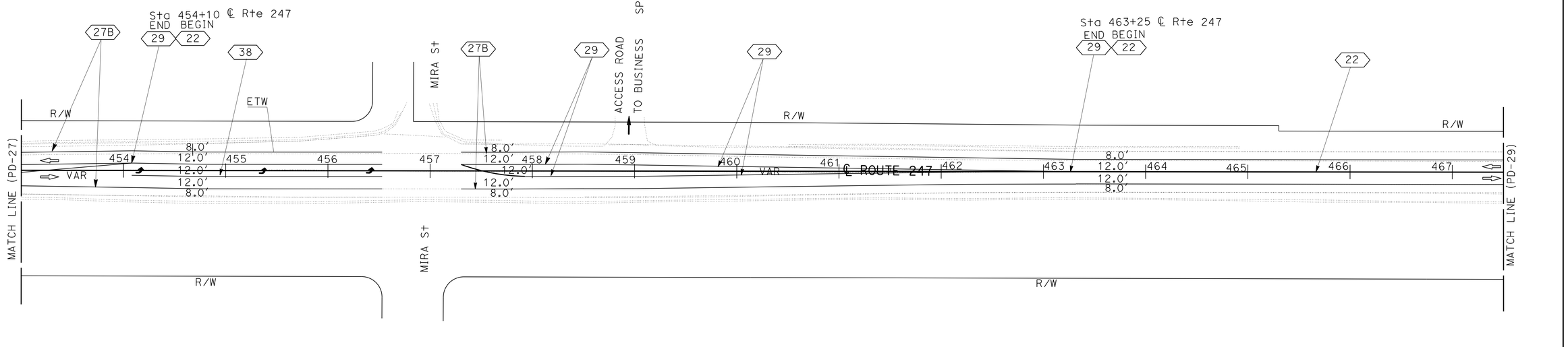

PAVEMENT DELINEATION & SIGNING

APPROVED FOR PAVEMENT DELINEATION AND SIGN WORK ONLY

SCALE: 1" = 50′

PD-28

STATE OF CALIFORNIA - DEPARTMENT OF TRANSPORTATION
Caltrans® TRAFFIC DESIGN
FUNCTIONAL SUPERVISOR: BILL WASSER
CALCULATED-DESIGNED BY: MEHDI KAMGAR
CHECKED BY: D.NAMI
REVISED BY
DATE REVISED

LAST REVISION 12-16-13
DATE PLOTTED => 20-DEC-2013
TIME PLOTTED => 10:16

BORDER LAST REVISED 7/2/2010
USERNAME => s110420
DGN FILE => 0800000146na028.dgn
RELATIVE BORDER SCALE IS IN INCHES 0 1 2 3
UNIT 2285
PROJECT NUMBER & PHASE 08000001461

Dist	COUNTY	ROUTE	POST MILES TOTAL PROJECT	SHEET No.	TOTAL SHEETS
08	SBd	247	1.8/9.6	153	196

M.M. Kamgar Haghighi 12-16-13
REGISTERED CIVIL ENGINEER DATE

12-16-13
PLANS APPROVAL DATE

REGISTERED PROFESSIONAL ENGINEER
M.KAMGAR
No. C58039
Exp 6-30-14
CIVIL
STATE OF CALIFORNIA

THE STATE OF CALIFORNIA OR ITS OFFICERS OR AGENTS SHALL NOT BE RESPONSIBLE FOR THE ACCURACY OR COMPLETENESS OF SCANNED COPIES OF THIS PLAN SHEET.

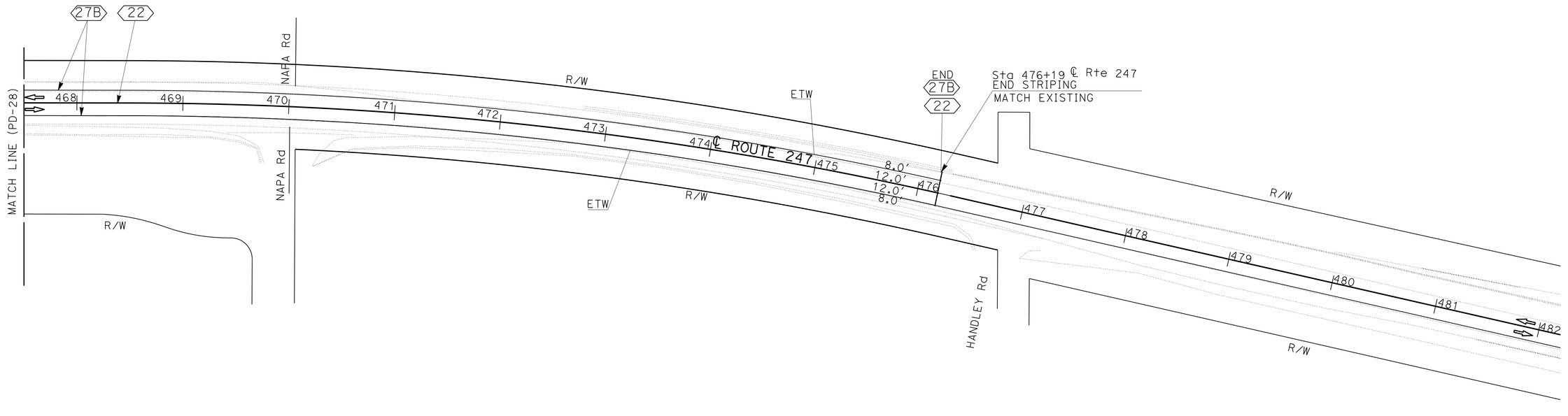

APPROVED FOR PAVEMENT DELINEATION AND SIGN WORK ONLY

PAVEMENT DELINEATION & SIGNING

SCALE: 1" = 50'

PD-29

REVISED BY	DATE REVISED

CALCULATED-DESIGNED BY
MEHDI KAMGAR

CHECKED BY
D.NAMI

FUNCTIONAL SUPERVISOR
BILL WASSER

STATE OF CALIFORNIA - DEPARTMENT OF TRANSPORTATION
Caltrans®
TRAFFIC DESIGN

LAST REVISION
DATE PLOTTED => 20-DEC-2013
TIME PLOTTED => 10:16
12-16-13

BORDER LAST REVISED 7/2/2010

USERNAME => s110420
DGN FILE => 0800000146na029.dgn

RELATIVE BORDER SCALE IS IN INCHES 0 1 2 3

UNIT 2285

PROJECT NUMBER & PHASE 08000001461

Dist	COUNTY	ROUTE	POST MILES TOTAL PROJECT	SHEET No.	TOTAL SHEETS
08	SBd	247	1.8/9.6	154	196

M.M. Kamgar Haghighi 12-16-13
REGISTERED CIVIL ENGINEER DATE

12-16-13
PLANS APPROVAL DATE

REGISTERED PROFESSIONAL ENGINEER M.M.Kamgar No. 58039 Exp 6-30-14 CIVIL STATE OF CALIFORNIA

THE STATE OF CALIFORNIA OR ITS OFFICERS OR AGENTS SHALL NOT BE RESPONSIBLE FOR THE ACCURACY OR COMPLETENESS OF SCANNED COPIES OF THIS PLAN SHEET.

PERMANENT PAVEMENT DELINEATION QUANTITIES

DETAIL NO.	PAVEMENT MARKERS				THERMOPLASTIC TRAFFIC STRIPE(SPRAYABLE)			THERMOPLASTIC TRAFFIC STRIPE
	RETROREFLECTIVE (RECESSED)				4"	4"	4"	8"
	TYPE C	TYPE G	TYPE D	TYPE H	WHITE SOLID	WHITE BROKEN	YELLOW SOLID	WHITE SOLID
	EA	EA	EA	EA	LF	LF	LF	LF
22			3156				37819	
27B					81064			
29			335				7612	
38		126						2984
12		27				1304		
TOTAL	3644				127799			2984

REMOVE PAVEMENT DELINEATION QUANTITIES

DETAIL NO.	REMOVE PAVEMENT MARKERS				REMOVE THERMOPLASTIC TRAFFIC STRIPE			
	RETROREFLECTIVE (RECESSED)				* 4"	4"	4"	8"
	TYPE C	TYPE G	TYPE D	TYPE H	YELLOW SOLID	WHITE BROKEN	WHITE SOLID	WHITE SOLID
	EA	EA	EA	EA	LF	LF	LF	LF
22			3156		37819			
27B							82368	
29			335		8053			
38		126						2984
SUBTOTAL					45872		82368	2984X2=5968
TOTAL	3617				45872	88336		

* HAZARDOUS WASTE

THERMOPLASTIC PAVEMENT MARKING

	SQFT	SQFT (REMOVE)
TYPE VI ARROW	252	252
TYPE IV ARROW	255	255
12" THERMOPLASTIC	337	
SIGNAL	64	
AHEAD	62	
STOP	110	
TOTAL	1080	507

RESET POST MILE MARKER

AT POST MILE	EA
2.3	1
3.3	1
4.0	1
5.3	1
6.0	1
7.0	1
TOTAL	6

RESET MARKER & DELINEATOR

EA
10

AT VARIOUS LOCATIONS
WITHIN THE WIDENING LIMIT

RESET (ONE POST) ROADSIDE SIGN

EA
9

MATERIAL SUMMARY CONTRACTOR FURNISHED SIGNS

SIGN CODE	SIGN SIZE L X D	SIGN AREA (SQFT)	Single Face	Background Sheeting Color	Retroreflective ASTM Type	Legend Sheeting Color	Retroreflective ASTM Type	Graffiti Film Premium	Roadside Single-Sheet Unframed Aluminium 0.063 INCH	INSTALL SIGN MAST ARM HANGER ASSEMBLY (N)	No. POST / POST SIZE (IN X IN)	DESCRIPTION(REMARKS)
W3-3	36" X 36"	18	2	YELLOW	III	BLACK	VII	X	X		1 / 4" X 6"	SIGNAL AHEAD SYMBOL
R1-1	36" X 36"	27	3	RED	III	WHITE	VII	X	X		1 / 4" X 6"	STOP
W3-3	48" X 48"	32	2	YELLOW	III	BLACK	VII	X	X	X		SIGNAL AHEAD SYMBOL
TOTAL		77										

(N) NOT A SEPARATE PAY ITEM, FOR INFORMATION ONLY

APPROVED FOR PAVEMENT DELINEATION AND SIGN QUANTITY WORK ONLY

PAVEMENT DELINEATION & SIGN QUANTITIES

PDQ-1

REVISED BY | DATE REVISED
CALCULATED-DESIGNED BY: Mehdi Kamgar | CHECKED BY: D.NAMI
FUNCTIONAL SUPERVISOR: Bill Wasser
STATE OF CALIFORNIA - DEPARTMENT OF TRANSPORTATION
Caltrans® TRAFFIC DESIGN

LAST REVISION | DATE PLOTTED => 20-DEC-2013
12-16-13 | TIME PLOTTED => 10:16

BORDER LAST REVISED 7/2/2010 | USERNAME => s110420 | DGN FILE => 0800000146nc001.dgn | RELATIVE BORDER SCALE IS IN INCHES 0 1 2 3 | UNIT 2285 | PROJECT NUMBER & PHASE 0800000146

Dist	COUNTY	ROUTE	POST MILES TOTAL PROJECT	SHEET No.	TOTAL SHEETS
08	SBd	247	1.8/9.6	155	196

12-16-13
REGISTERED CIVIL ENGINEER DATE

12-16-13
PLANS APPROVAL DATE

REGISTERED PROFESSIONAL ENGINEER
DAI HOANG
No. C64203
Exp. 6-30-15
CIVIL
STATE OF CALIFORNIA

THE STATE OF CALIFORNIA OR ITS OFFICERS OR AGENTS SHALL NOT BE RESPONSIBLE FOR THE ACCURACY OR COMPLETENESS OF SCANNED COPIES OF THIS PLAN SHEET.

NOTE:

LOCATION OF JOSHUA TREES & CALL BOXES ARE APPROXIMATE.
THE EXACT TRANSPLANT LOCATIONS WILL BE DETERMINED BY THE ENGINEER.

TRANSPLANT TREE QUANTITIES

			JOSHUA TREES			
STATION	LAYOUT SHEET	DIRECTION NB/SB	EA X TRUNK DIAMETER	LOCATION	PROTECT IN PLACE EA (N)	TRANSPLANT EA *
106+23.7 "A" Line	L-1	SB	4 X 8"	35.5' Lt Sta 106+23.7 "A" Line	X	
107+20.5 "A" Line	L-1	SB	3 X 18"	28.9' Lt Sta 107+20.5 "A" Line		X
107+53 "A" Line	L-1	NB	8"	37.6' Rt Sta 107+53 "A" Line	X	
92+25	L-3	SB	24"	31.5' Lt Sta 92+25		X
93+00	L-3	SB	20"	31' Lt Sta 93+00		X
95+21.5	L-3	NB	3 X 8"	27' Rt Sta 95+21.5		X
100+34.5	L-3	NB	16"	32' Rt Sta 100+34.5	X	
100+39.5	L-3	NB	8"	27' Rt Sta 100+39.5		X
112+82.6	L-4	SB	24"	32' Lt Sta 112+82.6		X
146+56.4	L-6	NB	9 X 8"	26' Rt Sta 146+56.4		X
155+90	L-7	SB	24"	27' Lt Sta 155+90		X
156+80.1	L-7	SB	36 IN	31' Lt Sta 156+80.1		X
156+80.1	L-7	NB	2 X 12"	30.5' Rt Sta 156+80.1		X
163+12	L-8	NB	2 X 12"	25' Rt Sta 163+12		X
168+02	L-8	NB	8"	27.7' Rt Sta 168+02		X
172+38 **	L-8	NB	20"	24.7' Rt Sta 172+38		X
181+18.1	L-9	SB	2 X 18"	30' Lt Sta 181+18.1		X
242+57.8	L-13	NB	2 X 12"	28.5' Rt Sta 242+57.8		X
246+30	L-13	NB	10"	25.5' Rt Sta 246+30		X
252+00	L-14	SB	6"	36' Lt Sta 252+00	X	
252+00	L-14	NB	12"	44' Rt Sta 252+00		X
288+24	L-16	SB	2 X 24"	27.3' Lt Sta 288+24		X
309+62	L-18	NB	16"	26.5' Rt Sta 309+62		X
323+50	L-19	NB	24"	31' Rt Sta 323+50		X
356+00	L-21	SB	18"	28' Lt Sta 356+00		X
364+50	L-21	NB	24"	26' Rt Sta 364+50		X
404+56	L-24	NB	18"	26.5' Rt Sta 404+56		X
412+86	L-25	SB	12"	29' Lt Sta 412+86		X
461+03.2	L-28	NB	12"	30' Rt Sta 461+03.2		X
				TOTAL	4	25

(N) : NOT A SEPARATE PAY ITEM, FOR INFORMATION ONLY

CALL BOXES

			CALL BOX			
STATION	LAYOUT SHEET	DIRECTION NB/SB	CALL BOX No.	LOCATION	PROTECT IN PLACE (N)	* RELOCATE (BY OTHERS) (N)
74+39.7	L-1	SB	247-21	40' Lt Sta 74+39.7	X	
115+96.6	L-4	NB	247-28	30.2' Rt Sta 115+96.6	X	
179+46.2	L-9	SB	247-41	33.4' Lt Sta 179+46.2	X	
179+51.3	L-9	NB	247-40	25.3' Rt Sta 179+51.3	X	
286+62.4	L-16	SB	247-61	27.3' Lt Sta 286+62.4		X
391+03.4	L-23	NB	247-80	27.7' Rt Sta 391+03.4	X	
444+10.9	L-27	NB	247-90	36.5' Rt Sta 444+10.9		X
				TOTAL	5	2

(N) : NOT A SEPARATE PAY ITEM, FOR INFORMATION ONLY

TEMPORARY FENCE (TYPE DESERT TORTOISE)

		TEMPORARY FENCE (TYPE DESERT TORTOISE)
STATION	LAYOUT SHEET	LF
301+00 TO 359+00	L-17 TO L-21	5800

* SEE LAYOUT SHEET.
** MOJAVE YUCCA TREE.
(N) NOT A SEPARATE PAY ITEM, FOR INFORMATION ONLY.

SUMMARY OF QUANTITIES

Q-1

REVISED BY | DATE REVISED
DAI HOANG | SERGIO E. AVILA
CALCULATED-DESIGNED BY | CHECKED BY
FUNCTIONAL SUPERVISOR: SERGIO E. AVILA
STATE OF CALIFORNIA - DEPARTMENT OF TRANSPORTATION
Caltrans® PROJECT DEVELOPMENT

LAST REVISION | DATE PLOTTED => 20-DEC-2013
12-16-13 | TIME PLOTTED => 10:16

BORDER LAST REVISED 7/2/2010 | USERNAME => s110420 | DGN FILE => 0800000146pa001.dgn | RELATIVE BORDER SCALE IS IN INCHES 0 1 2 3 | UNIT 2237 | PROJECT NUMBER & PHASE 08000001461

Dist	COUNTY	ROUTE	POST MILES TOTAL PROJECT	SHEET No.	TOTAL SHEETS
08	SBd	247	1.8/9.6	156	196

12-16-13
REGISTERED CIVIL ENGINEER DATE

12-16-13
PLANS APPROVAL DATE

REGISTERED PROFESSIONAL ENGINEER
DAI HOANG
No. C64203
Exp. 6-30-15
CIVIL
STATE OF CALIFORNIA

THE STATE OF CALIFORNIA OR ITS OFFICERS OR AGENTS SHALL NOT BE RESPONSIBLE FOR THE ACCURACY OR COMPLETENESS OF SCANNED COPIES OF THIS PLAN SHEET.

NOTE:
LOCATION OF MAIL BOXES ARE APRROXIMATE.
THE EXACT LOCATION WILL BE VERIFIED BY THE ENGINEER.

EXISTING MAIL BOXES

STATION	LAYOUT SHEET	DIRECTION NB/SB	No. OF MAIL BOX × MAIL BOX No.	LOCATION	PROTECT IN PLACE (N)	* RELOCATE (EA)
107+55.8 "A" Line	L-1	SB	1 x 5676	32.8′ Lt Sta 107+55.8		1
106+23.4 "A" Line	L-1	NB	2x 5675,6702	32.7′ Rt Sta 106+23.4		2
78+41	L-2	NB	1 x 5625	28.2′ Rt Sta 78+41		1
78+44.4	L-2	NB	1 X STARZ OASIS	29.8′ Rt Sta 78+44.4		1
78+54.6	L-2	SB	1 x 5564	38.3′ Lt Sta 78+54.6		1
81+29.1	L-2	NB	2 x 5529,5615	27.8′ Rt Sta 81+29.1		2
81+39.3	L-2	SB	4x56949,56922, 37,56950	30.1′ Lt Sta 81+39.3		4
84+66.3	L-2	SB	5x5428,56936, 56960, 56984,57115	30.9′ Lt Sta 84+66.3		5
92+07.6	L-3	SB	6x56916,56929, 54268, XX,56949,5424	39.2′ Lt Sta 92+07.6		6
92+76.5	L-3	NB	1 x 5357	25.3′ Rt Sta 92+76.5		1
98+49.6	L-3	SB	1 x 56915	24.1′ Lt Sta 98+49.6		1
101+03.4	L-3	SB	1 x 5262	25.1′ Lt Sta 101+03.4		1
104+51.5	L-4	NB	7x5275,57178, 57098,57091, 57090,57055, 57020	32.4′ Rt Sta 104+51.5		7
108+18.4 108+63.3	L-4	NB	1X NEWSPAPAER BOX 1 x 5155	32.3′ Rt Sta 108+18.4 32.3′ Rt Sta 108+63.3		1
109+94.6	L-4	SB	1 x 5132	25.3′ Lt Sta 109+94.6		1
138+80.9	L-6	NB	3X4757,56656,56655	27.5′ Rt Sta 138+80.9		3
140+29.9	L-6	NB	3X4624,4712,4695 (BILLS DIESEL)	30.4′ Rt Sta 140+29.9		3
145+76.4	L-6	NB	1 x 4625	25.5′ Rt Sta 145+76.4		1
151+84.5	L-7	NB	1 x 4451	59.5′ Rt Sta 151+84.5	X	
151+94.9	L-7	NB	MULTIPLE MAIL BOXES& NEWSPAPER BOXES	56.3′ Rt Sta 151+94.9	X	
155+25.3	L-7	NB	1 x 4413	36.9′ Rt Sta 155+25.3	X	
156+91.1	L-7	NB	2 x 4440, 4444	26.7′ Rt Sta 156+91.1		2
159+92.8	L-7	NB	1 x 4393	25.5′ Rt Sta 159+92.8		1
166+21	L-8	NB	1 x 4287	27.5′ Rt Sta 166+21		1
167+25.9	L-8	NB	1 X 8419 MULTIPLE MAIL BOXES	34.3′ Rt Sta 167+25.9		1
174+13.5	L-8	NB	4 x 17A,4197A, 4197,56833	56.3′ Rt Sta 174+13.5	X	
176+41.2	L-8	NB	1 x 4181	32.5′ Rt Sta 176+41.2		1

(N) : NOT A SEPARATE PAY ITEM, FOR INFORMATION ONLY

EXISTING MAIL BOXES (Cont)

STATION	LAYOUT SHEET	DIRECTION NB/SB	No. OF MAIL BOX × MAIL BOX No.	LOCATION	PROTECT IN PLACE (N)	* RELOCATE (EA)
312+74.6	L-18	NB	MULTIPLE MAIL BOXES& 2566,56261, 56277,56366,56327, 163,56363,2625, BELK,2658,ADAMS, 2828,28281/2, 2956,56276,56183, 56126,LOZANS, KEELER,BAWM	57.9′ Rt Sta 312+74.6	X	
363+08.3	L-21	NB	5x56180,1718, 1687, 56222,56224	26.7′ Rt Sta 363+08.3		5
383+71.5	L-23	SB	1 x 1412	83.1′ Lt Sta 383+71.5	X	
390+12.5	L-23	NB	4 x 56423,1266, 1225,1280	26.4′ Rt Sta 390+12.5		4
390+14.4	L-23	SB	1 x 1310	37.9′ Lt Sta 390+14.4		1
396+39	L-24	NB	3 x 1077,1176, 1021	26.0′ Rt Sta 396+39		3
396+82.1	L-24	NB	4 x 923,1010, 56457,1122	27.2′ Rt Sta 396+82.1		4
398+68.2	L-24	NB	1 x 118	28.1′ Rt Sta 398+68.2		1
406+63.3	L-24	SB	1 x 1030	23.9′ Lt Sta 406+63.3		1
410+94.2	L-25	NB	1 x 979	87.4′ Rt Sta 410+94.2	X	
429+97.4	L-26	SB	1 x 56022	27.1′ Lt Sta 429+97.4		1
451+91	L-27	SB	1 x 351	31.0′ Lt Sta 451+91		1
462+50	L-28	SB	1 x 186	27.5′ Lt Sta 462+50		1
465+47	L-28	SB	1 x 368	27.1′ Lt Sta 465+47	X	
TOTAL					31	70

(N) : NOT A SEPARATE PAY ITEM, FOR INFORMATION ONLY

SUMMARY OF QUANTITIES

Q-2

REVISED BY | DATE REVISED
DAI HOANG | SERGIO E. AVILA
CALCULATED-DESIGNED BY | CHECKED BY
FUNCTIONAL SUPERVISOR: SERGIO E. AVILA
STATE OF CALIFORNIA - DEPARTMENT OF TRANSPORTATION
Caltrans® PROJECT DEVELOPMENT

LAST REVISED => 12-16-13
DATE PLOTTED => 20-DEC-2013
TIME PLOTTED => 10:16

BORDER LAST REVISED 7/2/2010 | USERNAME => s110420 | DGN FILE => 0800000146pa002.dgn | RELATIVE BORDER SCALE IS IN INCHES 0 1 2 3 | UNIT 2237 | PROJECT NUMBER & PHASE 08000001461

Dist	COUNTY	ROUTE	POST MILES TOTAL PROJECT	SHEET No.	TOTAL SHEETS
08	SBd	247	1.8/9.6	157	196

12-16-13
REGISTERED CIVIL ENGINEER DATE

12-16-13
PLANS APPROVAL DATE

REGISTERED PROFESSIONAL ENGINEER
DAI HOANG
No. C64203
Exp. 6-30-15
CIVIL
STATE OF CALIFORNIA

THE STATE OF CALIFORNIA OR ITS OFFICERS OR AGENTS SHALL NOT BE RESPONSIBLE FOR THE ACCURACY OR COMPLETENESS OF SCANNED COPIES OF THIS PLAN SHEET.

MIDWEST GUARDRAIL SYSTEM

SHEET No.	DIRECTION	BEGIN STATION	END STATION	REMOVE GUARDRAIL	MGS (WOOD POST)	IN LINE TERMINAL SYSTEM END TREATMENT	BURIED POST END ANCHOR	END ANCHOR ASSEMBLY (TYPE SFT)	VEGETATION CONTROL (MINOR CONCRETE)	TREATED WOOD WASTE
				LF	LF	EA	EA	EA	SQYD	LB
L-4	NORTHBOUND	109+53.4	110+78.4	125						1380
L-6	SOUTHBOUND	140+44.2	141+69.2	125						1380
L-10	NORTHBOUND	198+95.35	199+39.1		43.75	1		1	35	
L-12	NORTHBOUND	233+62.5	234+62.5		100		1	1	18	
	FROM TRAFFIC- RESET ROADSIDE SIGN									1638
	TOTAL			250	143.75	1	1	2	53	4398

COLD PLANE

SHEET No.	STATION	DIRECTION	COLD PLANE ASPHALT CONCRETE PAVEMENT SQYD	
			(DEPTH) 0.10 FT	(DEPTH) 0.35 FT
L-1 TO L-4	64+26.5 To 118+01.6	SB	8972	
L-6 TO L-29	136+84.7 To 476+19.5	SB	65173.1	7634.9
L-1 TO L-4	64+26.5 To 114+07.8	NB	8931.8	286.2
L-5 TO L-29	133+17.3 To 477+25.5	NB	64714.7	8148.3
SUB TOTAL			147791.6	16069.4
TOTAL			163861	

HMA DIKE

SHEET No.	DIRECTION	BEGIN STATION	END STATION	(N) REMOVE AC DIKE	(N) REMOVE AC BERM	PLACE HMA DIKE (TYPE E)	PLACE HMA DIKE (TYPE F)	HMA (TYPE A) (DIKE & OVERSIDE DRAIN)	(N) MISCELLANEOUS AREA
				LF	LF	LF	LF	TON	SQYD
L-1	SOUTHBOUND	103+72.2 "A" LINE	106+47.7 "A" LINE	275.8		275.8		7.03	42.44
C-17	NORTHBOUND	224+27.9	225+00.5		63	100		2.55	14.80
L-12 & 13	SOUTHBOUND	228+00	236+67.5	867.5		867.5		22.10	128.20
L-12	NORTHBOUND	228+02.4	234+13.9	611.5		611.5		15.60	90.37
L-12 & 13	NORTHBOUND	234+13.9	240+05.5		591.6	543	48.6	15.10	87.43
L-13	NORTHBOUND	240+76.6	241+87.3		110.7	110.7		2.82	16.36
L-13	NORTHBOUND	242+10.2	242+50.5		40.3	40.3		1.03	5.96
	SHEET TOTAL			1755	805.6	2597		66.23	385.56
	FROM DQ-1							5	31
	TOTAL			1755	805.6	2548	48.6	71.23	416.56

(N) : NOT A SEPARATE PAY ITEM, FOR INFORMATION ONLY

SUMMARY OF QUANTITIES

Q-3

REVISED BY | DATE REVISED
DAI HOANG | SERGIO E. AVILA
CALCULATED-DESIGNED BY | CHECKED BY
FUNCTIONAL SUPERVISOR | SERGIO E. AVILA
STATE OF CALIFORNIA - DEPARTMENT OF TRANSPORTATION
Caltrans® PROJECT DEVELOPMENT

LAST REVISION | DATE PLOTTED => 20-DEC-2013
12-16-13 | TIME PLOTTED => 10:16

BORDER LAST REVISED 7/2/2010 | USERNAME => s110420 | DGN FILE => 0800000146pa003.dgn | RELATIVE BORDER SCALE IS IN INCHES 0 1 2 3 | UNIT 2237 | PROJECT NUMBER & PHASE 08000001461

Dist	COUNTY	ROUTE	POST MILES TOTAL PROJECT	SHEET No.	TOTAL SHEETS
08	SBd	247	1.8/9.6	158	196

12-16-13
REGISTERED CIVIL ENGINEER DATE

12-16-13
PLANS APPROVAL DATE

REGISTERED PROFESSIONAL ENGINEER
DAI HOANG
No. C64203
Exp. 6-30-15
CIVIL
STATE OF CALIFORNIA

THE STATE OF CALIFORNIA OR ITS OFFICERS OR AGENTS SHALL NOT BE RESPONSIBLE FOR THE ACCURACY OR COMPLETENESS OF SCANNED COPIES OF THIS PLAN SHEET.

PAVEMENT STRUCTURE QUANTITIES

DIRECTION	(N) SAWCUT	CL2AB		HMA-C			RHMA-G		LIQUID ASPHALT (PRIME COAT)	TACK COAT
		SHEET No. L1 TO L-29 ROADWAY	SHEET No. C5 TO C-41 ACCESS DIRT/ HMA ROAD	SHEET No. L1 TO L-29 ROADWAY	SHEET No. C5 TO C-41 ACCESS DIRT/ HMA ROAD	BASE UNDER DIKE	SHEET No. L1 TO L-29 ROADWAY	SHEET No. C5 TO C-41 ACCESS DIRT/ HMA ROAD		
	LF	CY		TON			TON		TON	TON
SOUTHBOUND	32751	5496	567	15610	1682	28	5947	344	43.3	17.3
NORTHBOUND	31167	5028	557	14517	1483	40	5951	254	40.1	16.1
SUBTOTAL	63918	11648		33360			12496		83.4	33.4
FROM SAFETY EDGE TABLE BELOW		800		1737						
FROM RSC TABLE BELOW		681								
TOTAL	63918	13129		35097			12496		83.4	33.4

EARTHWORK QUANTITIES

DIRECTION	ROADWAY EXCAVATION	DITCH EXCAVATION	(N) EMBANKMENT	
			ROADWAY	DITCH EXCAVATION
	CY	CY	CY	CY
SOUTHBOUND	12756		1504	
NORTHBOUND	11732		4325	
		22992		3859
TOTAL	24488	22992	5829	3859

SAFETY EDGE

DIRECTION	(N) TOTAL THICKNESS OF SAFETY EDGE	(N) LENGTH SAFETY EDGE	HMA (TYPE C)	CL2AB
	FT	LF	TON	CY
SOUTHBOUND	0.70	32751	890	410
NORTHBOUND	0.70	31167	847	390
SUBTOTAL			* 1737	* 800

RUMBLE STRIP

DIRECTION	SHOULDER RUMBLE STRIP (GROUND IN INDENTATIONS)		CENTERLINE RUMBLE STRIP (GROUND IN INDENTATIONS)	
	HMA PAVEMENT	CONCRETE PAVEMENT	HMA PAVEMENT	PCC PAVEMENT
	Sta	Sta	Sta	Sta
SOUTHBOUND	356.8	7		
NORTHBOUND	343.6	7		
			356.8	7
TOTAL	700.4	14	356.8	7

RSC

SHEET No.	STATION	CONCRETE CROSSING LENGTH (N)	CONCRETE CROSSING WIDTH (N)	JOINTED PLAIN CONCRETE (RSC)	PAVEMENT POLYETHYLENE FILM (6 Mil)	CL2AB	TIE BAR (N)	DOWEL BAR (N)	MISCELLANEOUS IRON AND STEEL	JOINT SEAL (PREFORMED COMPRESSION)	
										LONGITUDINAL	TRANSVERSE
		LF	LF	CY	SQYD	CY	EA	EA	LB	LF	LF
DD-3	171+50 TO 172+58	108	40	182	480	96	150	320	2230	324	280
DD-4	187+00 TO 188+20	120	40	201	533	106	160	360	3520	360	320
DD-10	249+42 TO 250+50	108	52	228	624	125	200	416	2328	432	364
DD-11	253+00 TO 254+08	108	Var 49.6'-55.6'	237	646	126	200	416	2328	432	377
DD-12	392+50 TO 393+98	148	40	246	658	132	198	572	2728	444	400
DD-13	418+92 TO 420+00	108	40	182	480	96	150	320	2230	324	280
FROM DQ-1									75		
SUBTOTAL				1276	3421	* 681	1058	2404	15439	2316	2021
TOTAL										4337	

(N) : NOT A SEPARATE PAY ITEM, FOR INFORMATION ONLY
* QUANTITY INCLUDED IN PAVEMENT STRUCTURE QUANTITIES.

SUMMARY OF QUANTITIES
Q-4

DESIGNED BY DAI HOANG
CALCULATED-DESIGNED BY
CHECKED BY
REVISED BY
DATE REVISED
FUNCTIONAL SUPERVISOR SERGIO E. AVILA
PROJECT DEVELOPMENT
STATE OF CALIFORNIA - DEPARTMENT OF TRANSPORTATION

LAST REVISION 12-16-13
DATE PLOTTED => 20-DEC-2013
TIME PLOTTED => 10:16

BORDER LAST REVISED 7/2/2010
USERNAME => s110420
DGN FILE => 0800000146pa004.dgn
RELATIVE BORDER SCALE IS IN INCHES 0 1 2 3
UNIT 2237
PROJECT NUMBER & PHASE 08000001461

Dist	COUNTY	ROUTE	POST MILES TOTAL PROJECT	SHEET No.	TOTAL SHEETS
08	SBd	247	1.8/9.6	159	196

LICENSED LANDSCAPE ARCHITECT

12-16-13
PLANS APPROVAL DATE

THE STATE OF CALIFORNIA OR ITS OFFICERS OR AGENTS SHALL NOT BE RESPONSIBLE FOR THE ACCURACY OR COMPLETENESS OF SCANNED COPIES OF THIS PLAN SHEET.

LICENSED LANDSCAPE ARCHITECT
Steven Magallanes No. 5643
Signature
12-31-14
Renewal Date
12-16-13
Date
STATE OF CALIFORNIA

DUFF AND EROSION CONTROL

SEQUENCE	ITEM	MATERIAL		APPLICATION RATE
		DESCRIPTION	TYPE	
STEP 1	DUFF	CHIPPED VEGETATION INCLUDING ROOTS REMOVED AND COLLECTED	-	SPREAD OVER ENTIRE AREA TO A UNIFORM DEPTH
STEP 2	HYDROSEED	SEED	MIX	28 LB PURE LIVE SEED/ACRE
		FIBER	WOOD	2500 LB/ACRE
		TACKIFIER	GUAR	125 LBS/ACRE

DUFF AND EROSION CONTROL QUANTITIES

SHEET	LOCATION				DUFF	HYDROSEED	REMARKS
	STATION	L†	R†		ACRES	SQFT	
NOT SHOWN ON PLANS	64+26.5 TO 463+31.8	X	X		38	1,655,280	COLLECT DUFF FROM EDGE OF PAVEMENT TO EDGE OF DISTURBANCE EXCLUDE BOULDERS 6" OR LARGER
				TOTAL	38	1,655,280	

SEED MIX

BOTANICAL NAME (COMMON NAME)	PERCENT GERMINATION (MINIMUM)	POUNDS PURE LIVE SEED PER ACRE (SLOPE MEASUREMENT)
ACHNATHERUM SPECIOSUM (DESERT NEEDLEGRASS)	25	6
AMBROSIA DUMOSA (BURROW WEED)	25	5
ARISTIDA PURPUREA VAR. PURPUREA (PURPLE THREE-AWN)	40	5
ATRIPLEX CANESCENS (FOUR-WING SALT BUSH)	50	3
ENCELIA FARINOSA (BRITTLE BUSH)	40	3
LARREA TRIDENTATA (CREOSOTE BUSH)	40	6
	TOTAL	28

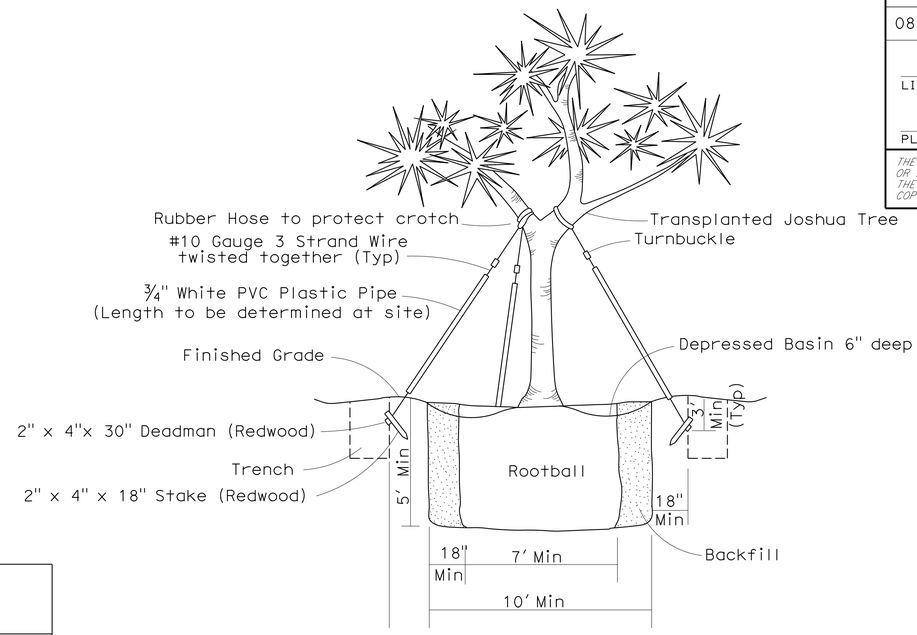

SECTION

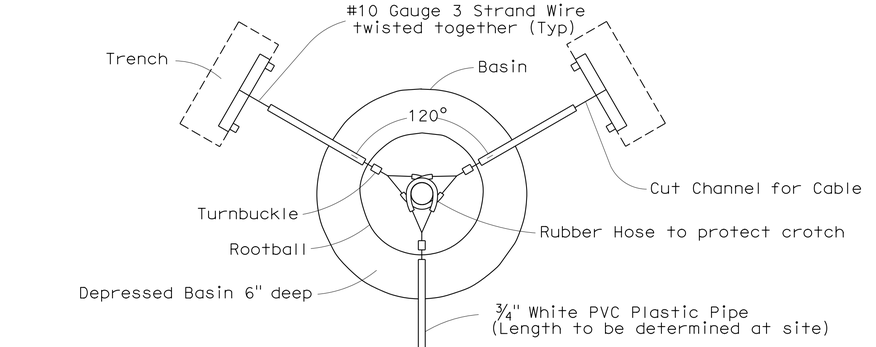

PLAN

NOTE: TREE GUYING WILL NOT BE REQUIRED FOR JOSHUA TREES UNDER 4' TRUNK HEIGHT MEASURED FROM EXISTING GRADE.

TRANSPLANT TREE

* DUFF SHOULD BE COLLECTED AND REPLACED FROM THE EDGE OF SHOULDER THROUGHOUT THE PROJECT LIMITS WHERE SOIL HAS BEEN EXCAVATED
JOSHUA TREES LOCATION ON SUMMARY OF QUANTITIES Q-1 PLAN

APPROVED FOR EROSION CONTROL AND PLANTING WORK ONLY

EROSION CONTROL PLAN

EC-1

STATE OF CALIFORNIA - DEPARTMENT OF TRANSPORTATION
LANDSCAPE ARCHITECTURE
SENIOR LANDSCAPE ARCHITECT: RAY DESSELLE
CALCULATED-DESIGNED BY: STEVEN MAGALLANES
CHECKED BY: MIKE BABICH
REVISED BY
DATE REVISED

LAST REVISION DATE PLOTTED => 20-DEC-2013
12-16-13 TIME PLOTTED => 10:16

BORDER LAST REVISED 7/2/2010
USERNAME => s110420
DGN FILE => 0800000146te001.dgn
RELATIVE BORDER SCALE IS IN INCHES 0 1 2 3
UNIT 2272
PROJECT NUMBER & PHASE 08000001461

Dist	COUNTY	ROUTE	POST MILES TOTAL PROJECT	SHEET No.	TOTAL SHEETS
08	SBd	247	1.8/9.6	160	196

12-16-13
REGISTERED ELECTRICAL ENGINEER DATE

12-16-13
PLANS APPROVAL DATE

REGISTERED PROFESSIONAL ENGINEER
FERDINAND DE LA CRUZ
No. E17215
Exp 6-30-14
ELECTRICAL
STATE OF CALIFORNIA

THE STATE OF CALIFORNIA OR ITS OFFICERS OR AGENTS SHALL NOT BE RESPONSIBLE FOR THE ACCURACY OR COMPLETENESS OF SCANNED COPIES OF THIS PLAN SHEET.

PROJECT NOTES (FOR SHEET E-1 AND E-2):

1 INSTALL ADVANCED FLASHING BEACON TYPE 15-FBS AS PER STANDARD PLAN ES-7J.
INSTALL 150 W INCANDESCENT LIGHT BULB AND W3-3 SIGN.

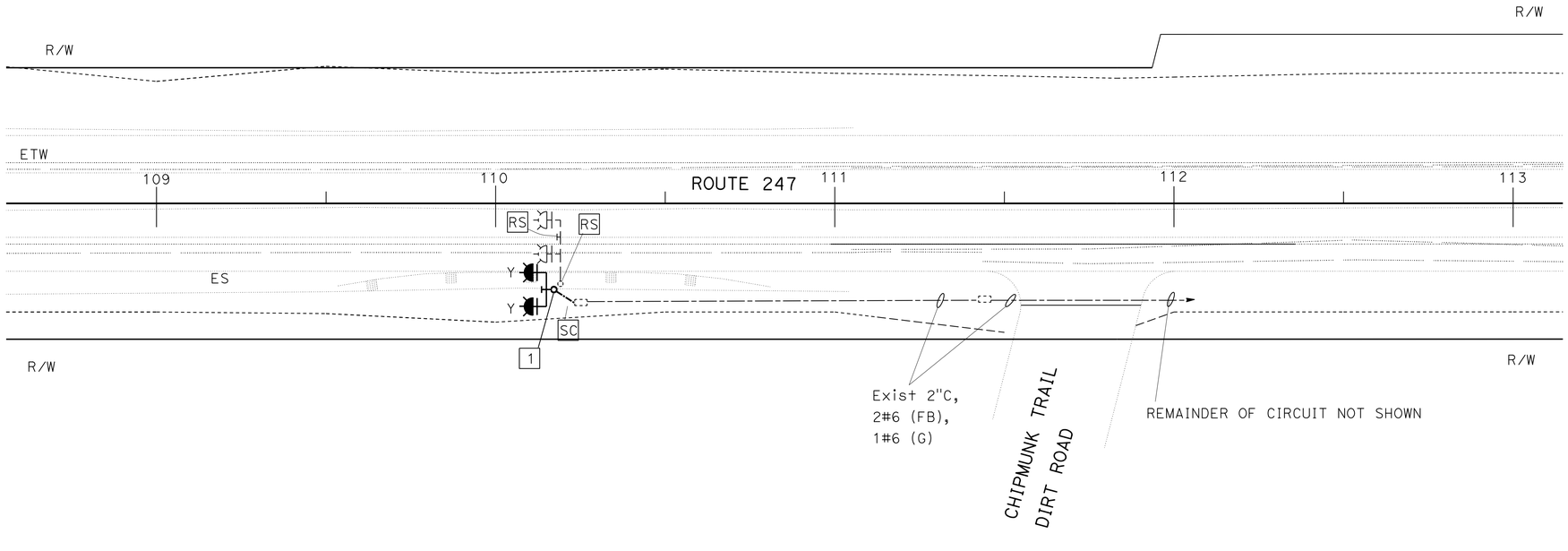

APPROVED FOR ELECTRICAL WORK ONLY

MODIFY SIGNAL AND LIGHTING

SCALE: 1"=20'

E-1

CALCULATED-DESIGNED BY
CHECKED BY
SANDY TUNG
FERDINAND DE LA CRUZ
REVISED BY
DATE REVISED
FUNCTIONAL SUPERVISOR
FERDINAND DE LA CRUZ

STATE OF CALIFORNIA - DEPARTMENT OF TRANSPORTATION
Caltrans® ELECTRICAL DESIGN B

LAST REVISION | DATE PLOTTED => 20-DEC-2013
12-16-13 | TIME PLOTTED => 10:16

BORDER LAST REVISED 7/2/2010
USERNAME => s110420
DGN FILE => 0800000146ua001.dgn
RELATIVE BORDER SCALE IS IN INCHES 0 1 2 3
UNIT 2292
PROJECT NUMBER & PHASE 08000001461

Dist	COUNTY	ROUTE	POST MILES TOTAL PROJECT	SHEET No.	TOTAL SHEETS
08	SBd	247	1.8/9.6	161	196

12-16-13
REGISTERED ELECTRICAL ENGINEER DATE

FERDINAND DE LA CRUZ
No. E17215
Exp. 6-30-14
ELECTRICAL
REGISTERED PROFESSIONAL ENGINEER
STATE OF CALIFORNIA

12-16-13
PLANS APPROVAL DATE

THE STATE OF CALIFORNIA OR ITS OFFICERS OR AGENTS SHALL NOT BE RESPONSIBLE FOR THE ACCURACY OR COMPLETENESS OF SCANNED COPIES OF THIS PLAN SHEET.

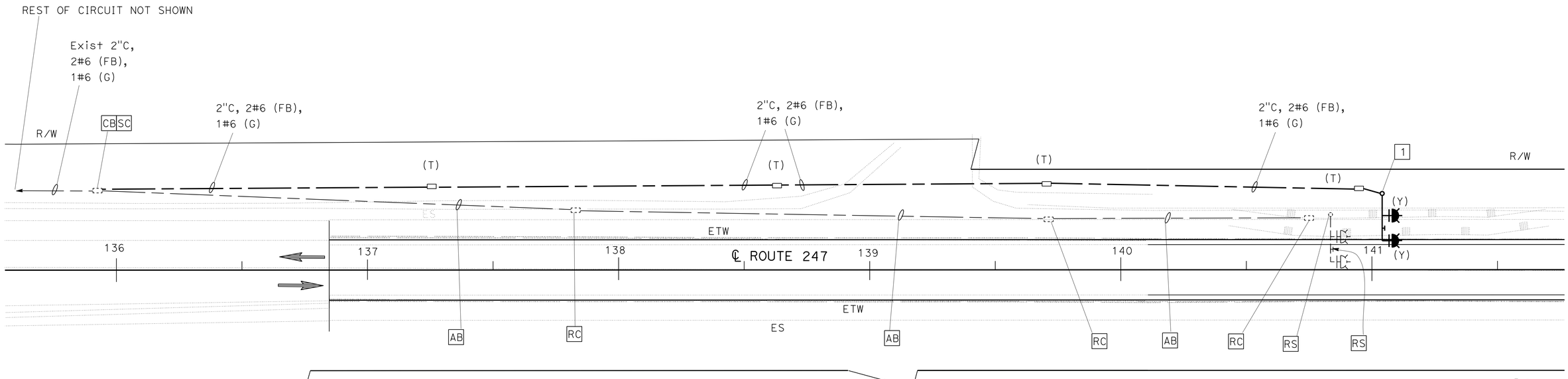

MODIFY SIGNAL AND LIGHTING

APPROVED FOR ELECTRICAL WORK ONLY

SCALE: 1"=20'

E-2

STATE OF CALIFORNIA - DEPARTMENT OF TRANSPORTATION
Caltrans® ELECTRICAL DESIGN B

FUNCTIONAL SUPERVISOR: FERDINAND DE LA CRUZ
CALCULATED-DESIGNED BY: SANDY TUNG
CHECKED BY: FERDINAND DE LA CRUZ
REVISED BY
DATE REVISED

LAST REVISION
DATE PLOTTED => 20-DEC-2013
TIME PLOTTED => 10:16
12-16-13

BORDER LAST REVISED 7/2/2010
USERNAME => s110420
DGN FILE => 0800000146ua002.dgn
RELATIVE BORDER SCALE IS IN INCHES 0 1 2 3
UNIT 2292
PROJECT NUMBER & PHASE 08000001461

M

Maint	MAINTENANCE
Max	MAXIMUM
MB	METAL BEAM
MBB	METAL BEAM BARRIER
MBGR	METAL BEAM GUARD RAILING
Med	MEDIAN
MGS	MIDWEST GUARDRAIL SYSTEM
MH	MANHOLE
Min	MINIMUM
Misc	MISCELLANEOUS
Misc I & S	MISCELLANEOUS IRON AND STEEL
Mkr	MARKER
Mod	MODIFIED, MODIFY
Mon	MONUMENT
MP	METAL PLATE
MPGR	METAL PLATE GUARD RAILING
MR	MOVEMENT RATING
MSE	MECHANICALLY STABILIZED EMBANKMENT
Mt	MOUNTAIN, MOUNT
Mtl	MATERIAL
MVP	MAINTENANCE VEHICLE PULLOUT

N

N	NORTH
NB	NORTHBOUND
No.	NUMBER (MUST HAVE PERIOD)
Nos.	NUMBERS (MUST HAVE PERIOD)
NPS	NOMINAL PIPE SIZE
NS	NEAR SIDE
NSP	NEW STANDARD PLAN
NTS	NOT TO SCALE

O

Oblr	OBLITERATE
OC	OVERCROSSING
OD	OUTSIDE DIAMETER
OF	OUTSIDE FACE
OG	ORIGINAL GROUND
OGAC	OPEN GRADED ASPHALT CONCRETE
OGFC	OPEN GRADED FRICTION COURSE
OH	OVERHEAD
OHWM	ORDINARY HIGH WATER MARK
O-O	OUT TO OUT
Opp	OPPOSITE
OSD	OVERSIDE DRAIN

P

P	PAGE
PAP	PERFORATED ALUMINUM PIPE
PB	PULL BOX
PC	POINT OF CURVATURE, PRECAST
PCC	POINT OF COMPOUND CURVE, PORTLAND CEMENT CONCRETE
PCMS	PORTABLE CHANGEABLE MESSAGE SIGN
PCP	PERFORATED CONCRETE PIPE, PRESTRESSED CONCRETE PIPE
PCVC	POINT OF COMPOUND VERTICAL CURVE
PEC	PERMIT TO ENTER AND CONSTRUCT
Ped	PEDESTRIAN
Ped OC	PEDESTRIAN OVERCROSSING
Ped UC	PEDESTRIAN UNDERCROSSING
Perm Mtl	PERMEABLE MATERIAL

P continued

PG	PROFILE GRADE
PI	POINT OF INTERSECTION
PJP	PARTIAL JOINT PENETRATION
Pkwy	PARKWAY
℄,PL	PLATE
P/L	PROPERTY LINE
PM	POST MILE, TIME FROM NOON TO MIDNIGHT
PN	PAVING NOTCH
POC	POINT OF HORIZONTAL CURVE
POT	POINT OF TANGENT
POVC	POINT OF VERTICAL CURVE
PP	PIPE PILE, PLASTIC PIPE, POWER POLE
PPL	PREFORMED PERMEABLE LINER
PPP	PERFORATED PLASTIC PIPE
PRC	POINT OF REVERSE CURVE
PRF	PAVEMENT REINFORCING FABRIC
PRVC	POINT OF REVERSE VERTICAL CURVE
PS&E	PLANS, SPECIFICATIONS AND ESTIMATES
PS, P/S	PRESTRESSED
PSP	PERFORATED STEEL PIPE
PT	POINT OF TANGENCY
PVC	POLYVINYL CHLORIDE
Pvmt	PAVEMENT

Q

Qty	QUANTITY

R

R	RADIUS
R & D	REMOVE AND DISPOSE
R & S	REMOVE AND SALVAGE
R/C	RATE OF CHANGE
RCA	REINFORCED CONCRETE ARCH
RCB	REINFORCED CONCRETE BOX
RCP	REINFORCED CONCRETE PIPE
RCPA	REINFORCED CONCRETE PIPE ARCH
Rd	ROAD
Reinf	REINFORCED, REINFORCEMENT, REINFORCING
Rel	RELOCATE
Repl	REPLACEMENT
Ret	RETAINING
Rev	REVISED, REVISION
Rdwy	ROADWAY
RHMA	RUBBERIZED HOT MIX ASPHALT
Riv	RIVER
RM	ROAD-MIXED
RP	RADIUS POINT, REFERENCE POINT
RR	RAILROAD
RSP	ROCK SLOPE PROTECTION, REVISED STANDARD PLAN
Rt	RIGHT
Rte	ROUTE
RW	REDWOOD, RETAINING WALL
R/W	RIGHT OF WAY
Rwy	RAILWAY

S

S	SOUTH, SUPPLEMENT
SAE	STRUCTURE APPROACH EMBANKMENT
Salv	SALVAGE
SAPP	STRUCTURAL ALUMINUM PLATE PIPE
SB	SOUTHBOUND
SC	SAND CUSHION
SCSP	SLOTTED CORRUGATED STEEL PIPE
SD	STORM DRAIN
Sec	SECOND, SECTION
Sep	SEPARATION
SG	SUBGRADE
Shld	SHOULDER
Sht	SHEET
Sim	SIMILAR
℄	STATION LINE
SM	SELECTED MATERIAL
Spec	SPECIAL, SPECIFICATIONS
SPP	SLOTTED PLASTIC PIPE
SS	SLOPE STAKE
SSBM	STRAP AND SADDLE BRACKET METHOD
SSD	STRUCTURAL SECTION DRAIN
SSPA	STRUCTURAL STEEL PLATE ARCH
SSPP	STRUCTURAL STEEL PLATE PIPE
SSPPA	STRUCTURAL STEEL PLATE PIPE ARCH
SSRP	STEEL SPIRAL RIB PIPE
St	STREET
Sta	STATION
STBB	SINGLE THRIE BEAM BARRIER
Std	STANDARD
Str	STRUCTURE
Surf	SURFACING
SW	SIDEWALK, SOUND WALL
Swr	SEWER
Sym	SYMMETRICAL
S4S	SURFACE 4 SIDES

T

T	SEMI-TANGENT
Tan	TANGENT
TBB	THRIE BEAM BARRIER
Tbr	TIMBER
TC	TOP OF CURB
TCB	TRAFFIC CONTROL BOX
TCE	TEMPORARY CONSTRUCTION EASEMENT
Tel	TELEPHONE
Temp	TEMPORARY
TG	TOP OF GRADE
Tot	TOTAL
TP	TELEPHONE POLE
TPB	TREATED PERMEABLE BASE
TPM	TREATED PERMEABLE MATERIAL
Trans	TRANSITION

T continued

TS	TRANSVERSE, TRAFFIC SIGNAL, TUBULAR STEEL
Typ	TYPICAL

U

UC	UNDERCROSSING
UD	UNDERDRAIN
UG	UNDERGROUND
UON	UNLESS OTHERWISE NOTED
UP	UNDERPASS

V

V	VALVE, DESIGN SPEED
Var	VARIABLE, VARIES
VC	VERTICAL CURVE
VCP	VITRIFIED CLAY PIPE
Vert	VERTICAL
Via	VIADUCT
Vol	VOLUME

W

W	WEST, WIDTH
WB	WESTBOUND
WH	WEEP HOLE
WM	WIRE MESH
WS	WATER SURFACE
WSP	WELDED STEEL PIPE
Wt	WEIGHT
WV	WATER VALVE
WW	WINGWALL
WWLOL	WINGWALL LAYOUT LINE

X

X Sec	CROSS SECTION
Xing	CROSSING

Y

Yr	YEAR
Yrs	YEARS

Dist	COUNTY	ROUTE	POST MILES TOTAL PROJECT	SHEET No.	TOTAL SHEETS
08	SBd	247	1.8/9.6	162	196

Grace M. Tsushima
REGISTERED CIVIL ENGINEER

July 19, 2013
PLANS APPROVAL DATE

Grace M. Tsushima No. C49814 Exp. 9-30-14 CIVIL — REGISTERED PROFESSIONAL ENGINEER — STATE OF CALIFORNIA

THE STATE OF CALIFORNIA OR ITS OFFICERS OR AGENTS SHALL NOT BE RESPONSIBLE FOR THE ACCURACY OR COMPLETENESS OF SCANNED COPIES OF THIS PLAN SHEET.

TO ACCOMPANY PLANS DATED 12-16-13

UNIT OF MEASUREMENT SYMBOLS:

Some of the symbols used in the project plan quantity tables and in the Bid Item List are:

TABLE A

SYMBOL USED	DEFINITIONS
ACRE	ACRE
CF	CUBIC FOOT
CY	CUBIC YARD
EA	EACH
GAL	GALLON
LB	POUND
LF	LINEAR FOOT
SQFT	SQUARE FOOT
SQYD	SQUARE YARD
STA	100 FEET
TAB	TABLET
TON	2,000 POUNDS

Some of the symbols used in the plans other than in the project plan quantity tables are:

TABLE B

SYMBOL USED	DEFINITIONS
ksi	KIPS PER SQUARE INCH
ksf	KIPS PER SQUARE FOOT
psi	POUNDS PER SQUARE INCH
psf	POUNDS PER SQUARE FOOT
lb/ft^3, pcf	POUNDS PER CUBIC FOOT
tsf	TONS PER SQUARE FOOT
mph, MPH *	MILES PER HOUR
ø	NOMINAL DIAMETER
oz	OUNCE
lb	POUND
kip	1,000 POUNDS
cal	CALORIE
ft	FOOT OR FEET
gal	GALLON

* For use on a sign panel only

STATE OF CALIFORNIA
DEPARTMENT OF TRANSPORTATION

ABBREVIATIONS (SHEET 2 OF 2)

NO SCALE

RSP A10B DATED JULY 19, 2013 SUPERSEDES STANDARD PLAN A10B DATED MAY 20, 2011 - PAGE 2 OF THE STANDARD PLANS BOOK DATED 2010.

REVISED STANDARD PLAN RSP A10B

2010 REVISED STANDARD PLAN RSP A10B

6-7-13

Dist	COUNTY	ROUTE	POST MILES TOTAL PROJECT	SHEET No.	TOTAL SHEETS
08	SBd	247	1.8/9.6	163	196

Roberta L. McLaughlin
REGISTERED CIVIL ENGINEER

July 19, 2013
PLANS APPROVAL DATE

REGISTERED PROFESSIONAL ENGINEER
Roberta L. McLaughlin
No. C40375
Exp. 3-31-15
CIVIL
STATE OF CALIFORNIA

THE STATE OF CALIFORNIA OR ITS OFFICERS OR AGENTS SHALL NOT BE RESPONSIBLE FOR THE ACCURACY OR COMPLETENESS OF SCANNED COPIES OF THIS PLAN SHEET.

TO ACCOMPANY PLANS DATED 12-16-13

EXIT RAMP NEUTRAL AREA (GORE) TREATMENT

DETAIL 36

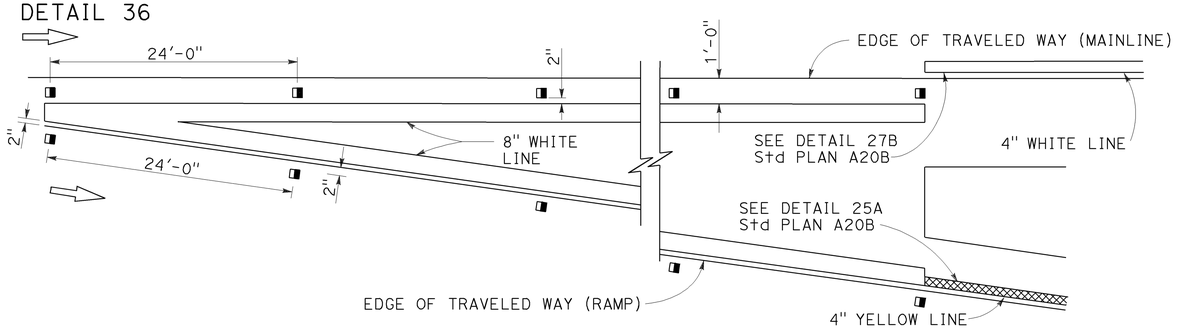

ENTRANCE RAMP NEUTRAL AREA (MERGE) TREATMENT

DETAIL 36A

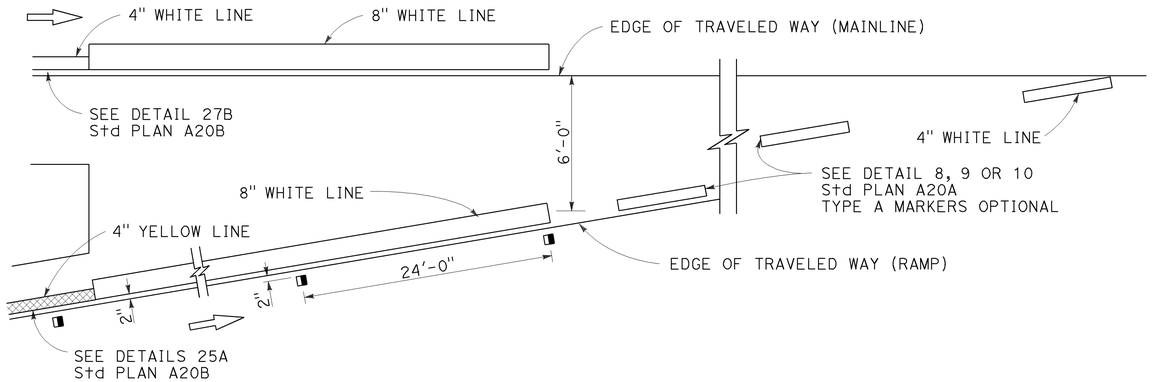

ENTRANCE RAMP NEUTRAL AREA (ACCELERATION LANE) TREATMENT

DETAIL 36B

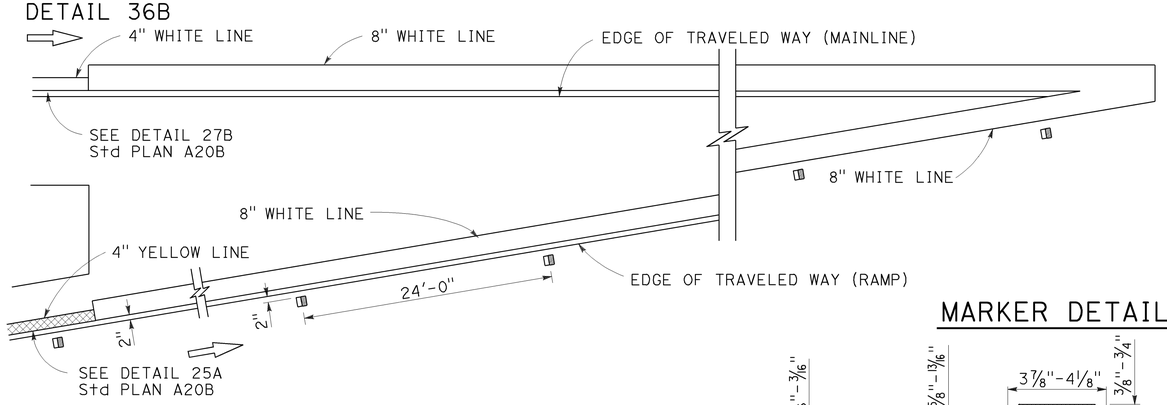

LANE DROP AT EXIT RAMPS

DETAIL 37

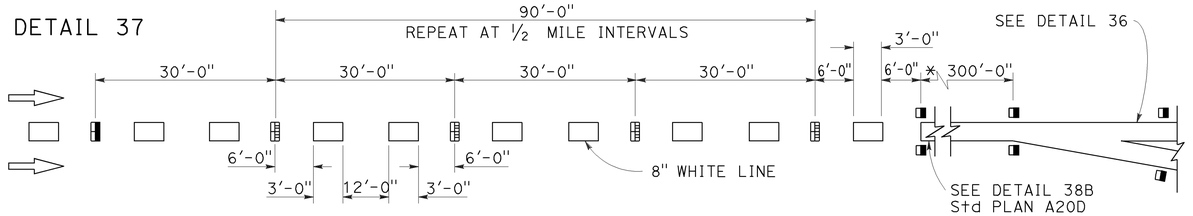

DETAIL 37A

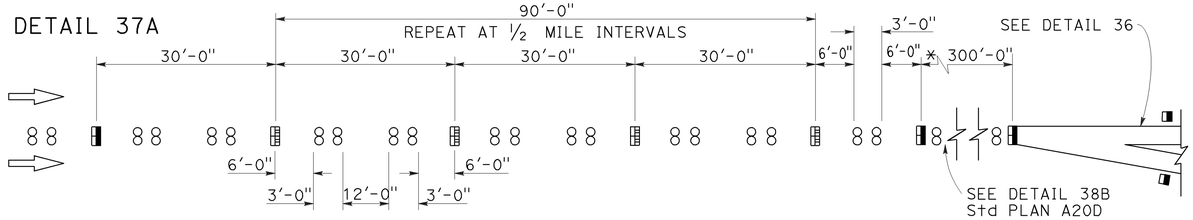

* The solid channelizing line shown may be omitted on short auxiliary lanes where weaving length is critical.

LANE DROP AT INTERSECTIONS

DETAIL 37B

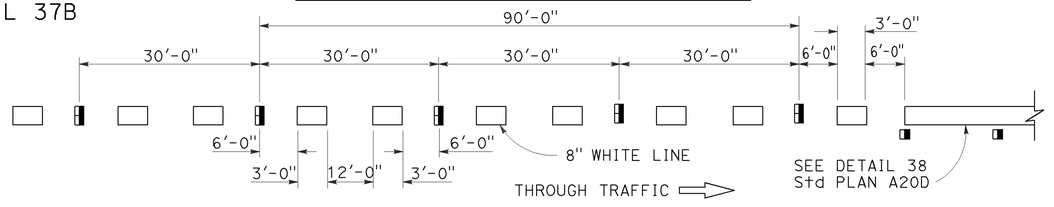

DETAIL 37C

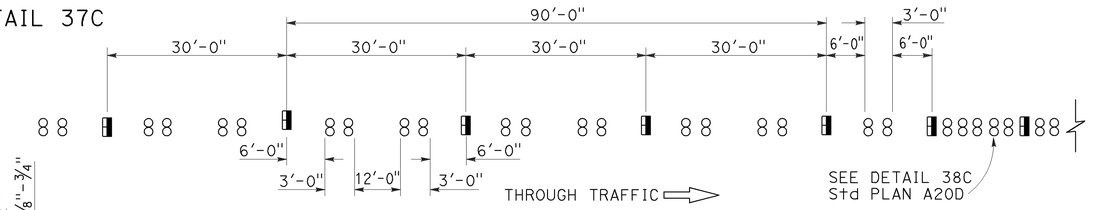

MARKER DETAILS

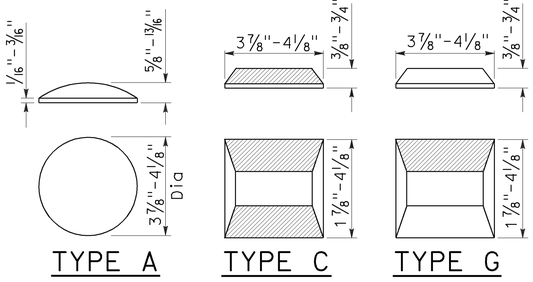

LEGEND:

MARKERS

- ○ TYPE A WHITE NON-REFLECTIVE
- ▣ TYPE C RED-CLEAR RETROREFLECTIVE
- ◨ TYPE G ONE-WAY CLEAR RETROREFLECTIVE

STATE OF CALIFORNIA
DEPARTMENT OF TRANSPORTATION

PAVEMENT MARKERS AND TRAFFIC LINE TYPICAL DETAILS

NO SCALE

RSP A20C DATED JULY 19, 2013 SUPERSEDES STANDARD PLAN A20C
DATED MAY 20, 2011 - PAGE 11 OF THE STANDARD PLANS BOOK DATED 2010.

REVISED STANDARD PLAN RSP A20C

2010 REVISED STANDARD PLAN RSP A20C

4-29-13

Dist	COUNTY	ROUTE	POST MILES TOTAL PROJECT	SHEET No.	TOTAL SHEETS
08	SBd	247	1.8/9.6	164	196

REGISTERED CIVIL ENGINEER

April 20, 2012
PLANS APPROVAL DATE

Roberta L. McLaughlin
No. C40375
Exp. 3-31-13
CIVIL
REGISTERED PROFESSIONAL ENGINEER
STATE OF CALIFORNIA

THE STATE OF CALIFORNIA OR ITS OFFICERS OR AGENTS SHALL NOT BE RESPONSIBLE FOR THE ACCURACY OR COMPLETENESS OF SCANNED COPIES OF THIS PLAN SHEET.

TO ACCOMPANY PLANS DATED 12-16-13

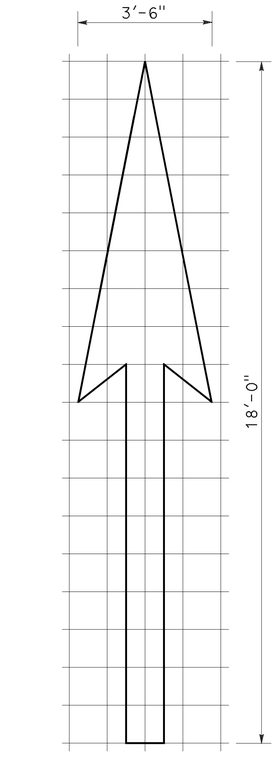

A=25 ft²

TYPE I 18'-0" ARROW

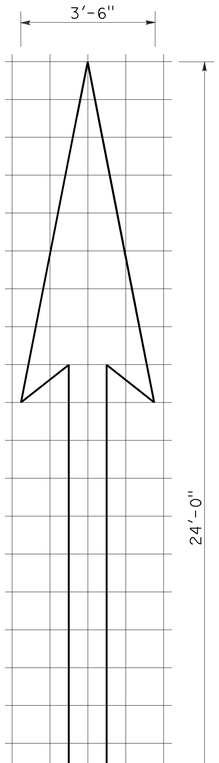

A=31 ft²

TYPE I 24'-0" ARROW

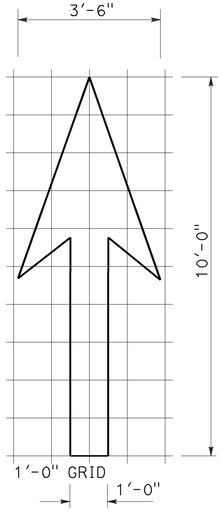

A=14 ft²

TYPE I 10'-0" ARROW

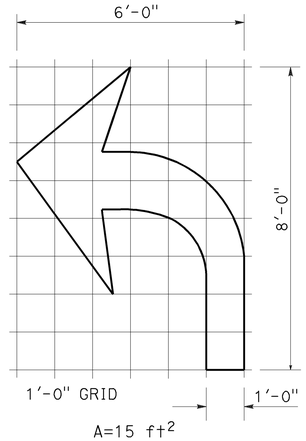

A=15 ft²

TYPE IV (L) ARROW

(For Type IV (R) arrow, use mirror image)

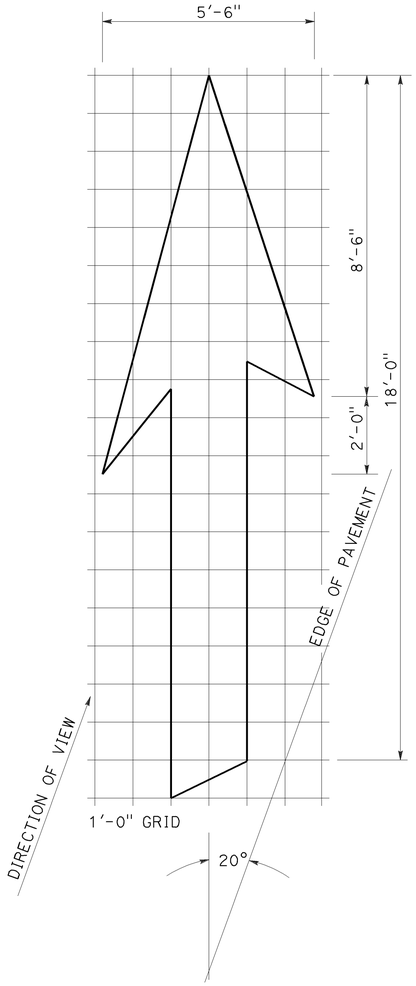

A=42 ft²

TYPE VI ARROW

Right lane drop arrow (For left lane, use mirror image)

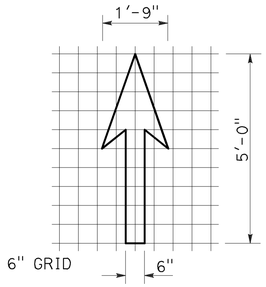

A=3.5 ft²

BIKE LANE ARROW

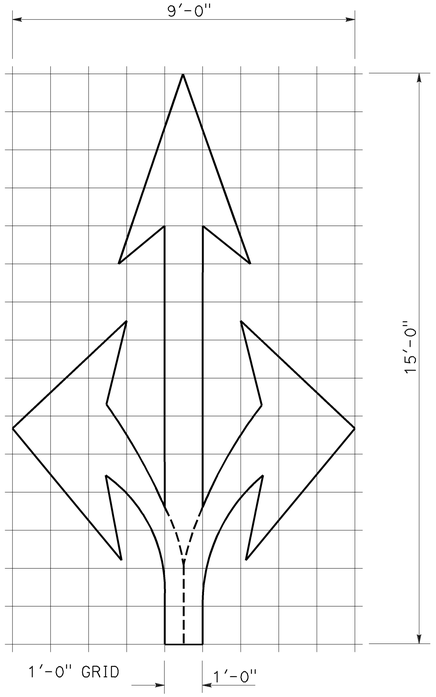

A=36 ft²

TYPE VIII ARROW

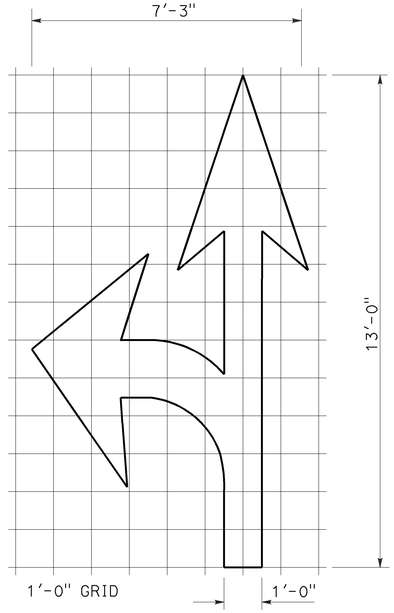

A=27 ft²

TYPE VII (L) ARROW

(For Type VII (R) arrow, use mirror image)

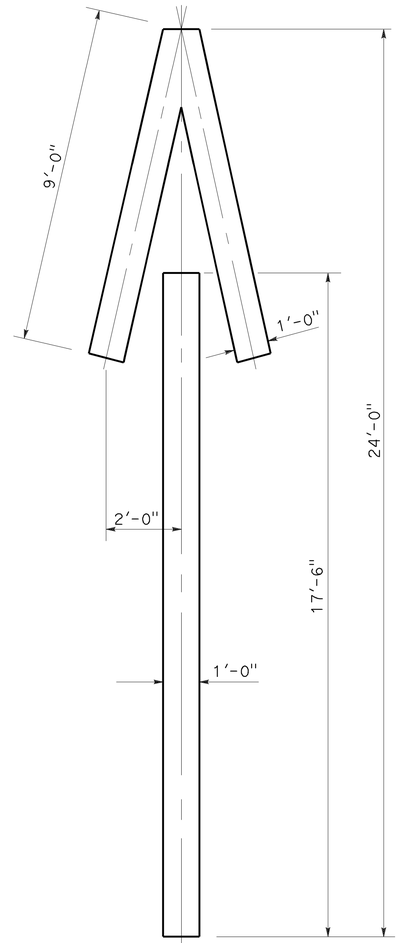

A=33 ft²

TYPE V ARROW

NOTE:
Minor variations in dimensions may be accepted by the Engineer.

STATE OF CALIFORNIA
DEPARTMENT OF TRANSPORTATION

PAVEMENT MARKINGS ARROWS

NO SCALE

RSP A24A DATED APRIL 20, 2012 SUPERSEDES STANDARD PLAN A24A DATED MAY 20, 2011 - PAGE 13 OF THE STANDARD PLANS BOOK DATED 2010.

REVISED STANDARD PLAN RSP A24A

2010 REVISED STANDARD PLAN RSP A24A

3-14-12

Dist	COUNTY	ROUTE	POST MILES TOTAL PROJECT	SHEET No.	TOTAL SHEETS
08	SBd	247	1.8/9.6	165	196

Roberta L. McLaughlin
REGISTERED CIVIL ENGINEER

October 19, 2012
PLANS APPROVAL DATE

Roberta L. McLaughlin
No. C40375
Exp. 3-31-13
CIVIL
REGISTERED PROFESSIONAL ENGINEER
STATE OF CALIFORNIA

THE STATE OF CALIFORNIA OR ITS OFFICERS OR AGENTS SHALL NOT BE RESPONSIBLE FOR THE ACCURACY OR COMPLETENESS OF SCANNED COPIES OF THIS PLAN SHEET.

NOTE: TO ACCOMPANY PLANS DATED 12-16-13

Minor variations in dimensions may be accepted by the Engineer.

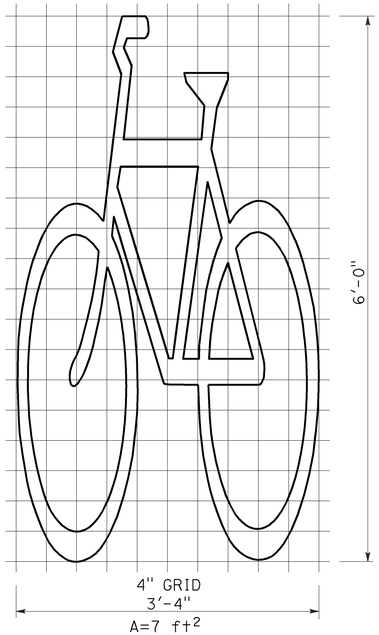

BIKE LANE SYMBOL WITHOUT PERSON

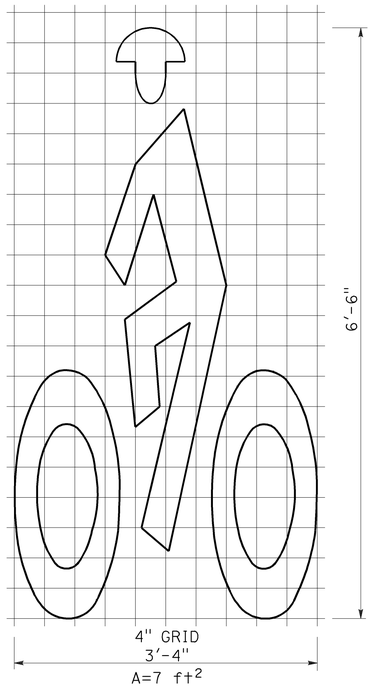

BIKE LANE SYMBOL WITH PERSON

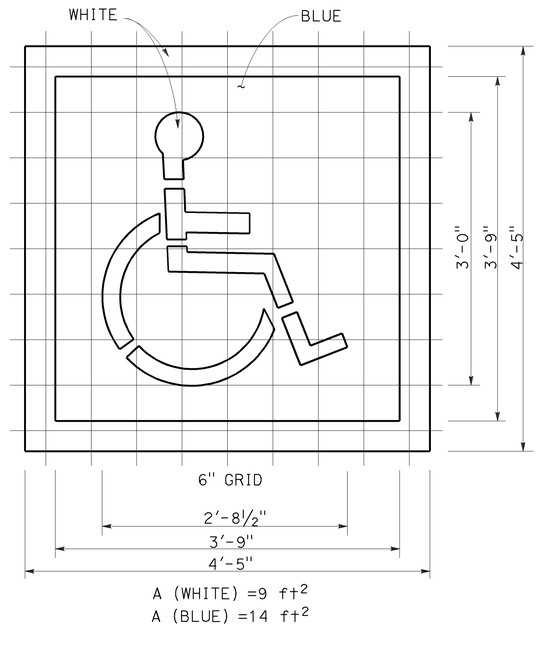

INTERNATIONAL SYMBOL OF ACCESSIBILITY (ISA) MARKING

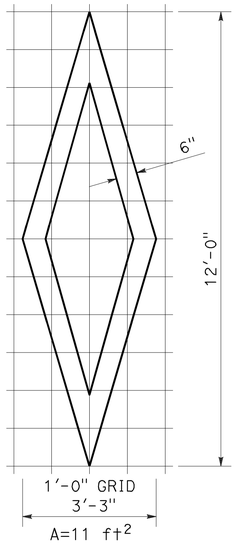

DIAMOND SYMBOL

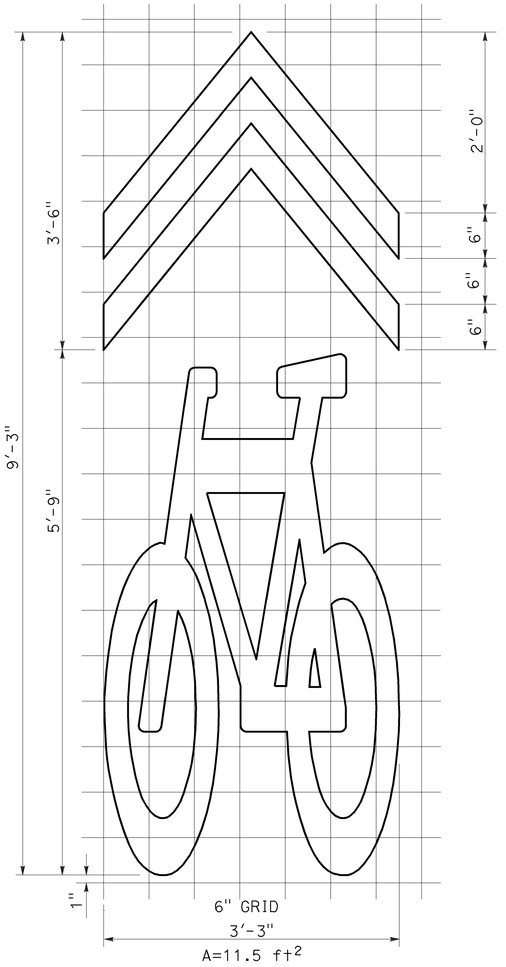

SHARED ROADWAY BICYCLE MARKING

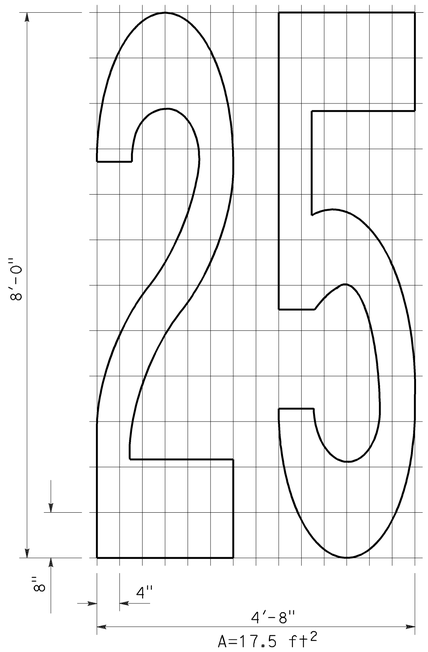

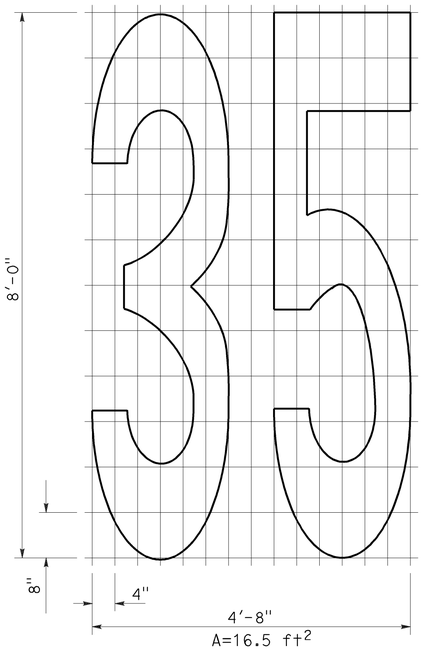

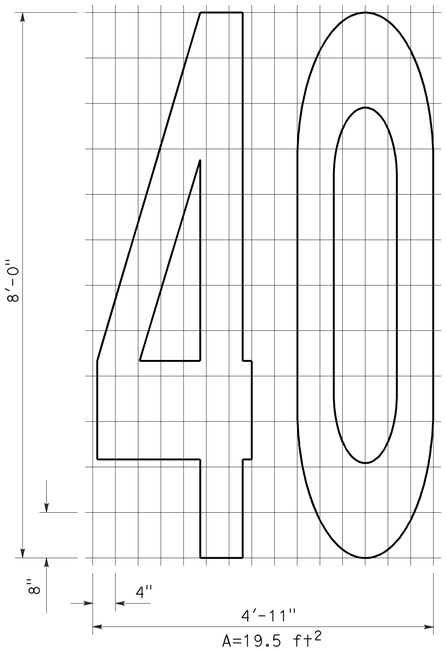

NUMERALS

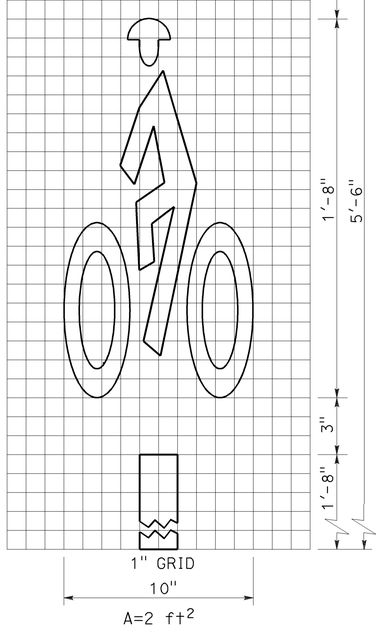

BICYCLE LOOP DETECTOR SYMBOL

STATE OF CALIFORNIA
DEPARTMENT OF TRANSPORTATION

PAVEMENT MARKINGS SYMBOLS AND NUMERALS

NO SCALE

RSP A24C DATED OCTOBER 19, 2012 SUPERSEDES STANDARD PLAN A24C DATED MAY 20, 2011 - PAGE 15 OF THE STANDARD PLANS BOOK DATED 2010.

REVISED STANDARD PLAN RSP A24C

2010 REVISED STANDARD PLAN RSP A24C

6-28-12

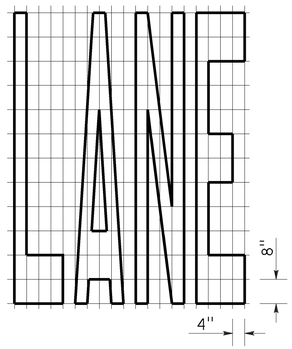

A=24 ft²

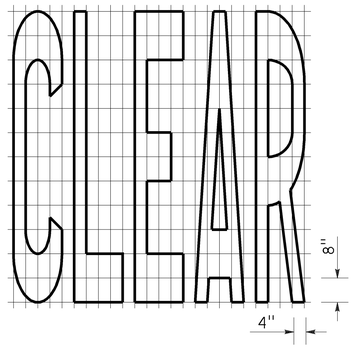

A=27 ft²

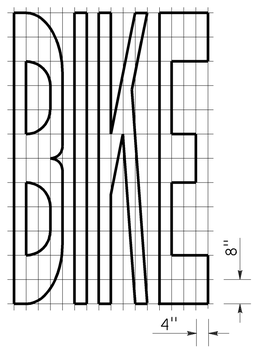

A=21 ft²

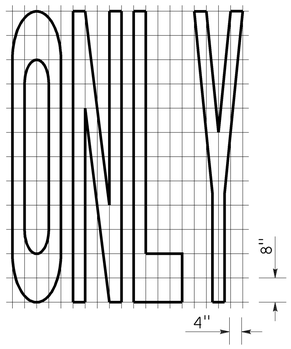

A=22 ft²

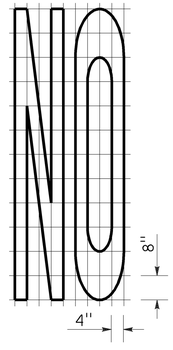

A=14 ft²

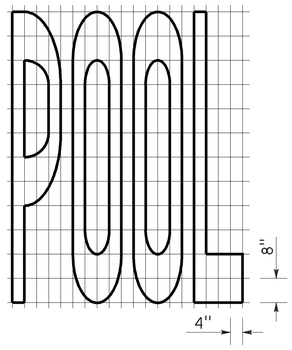

A=23 ft²

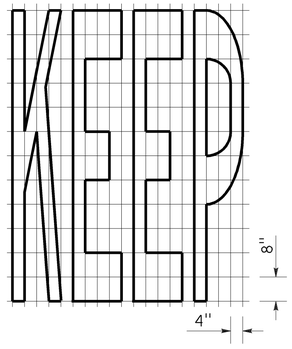

A=24 ft²

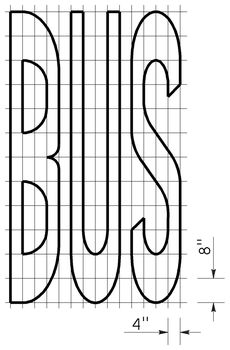

A=20 ft²

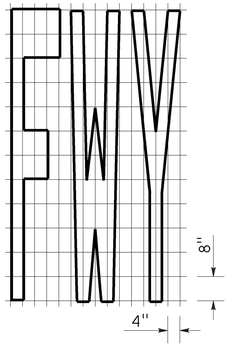

A=16 ft²

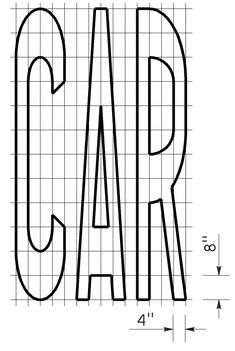

A=17 ft²

Dist	COUNTY	ROUTE	POST MILES TOTAL PROJECT	SHEET No.	TOTAL SHEETS
08	SBd	247	1.8/9.6	166	196

Roberta L. McLaughlin
REGISTERED CIVIL ENGINEER

July 20, 2012
PLANS APPROVAL DATE

REGISTERED PROFESSIONAL ENGINEER
Roberta L. McLaughlin
No. C40375
Exp. 3-31-13
CIVIL
STATE OF CALIFORNIA

THE STATE OF CALIFORNIA OR ITS OFFICERS OR AGENTS SHALL NOT BE RESPONSIBLE FOR THE ACCURACY OR COMPLETENESS OF SCANNED COPIES OF THIS PLAN SHEET.

TO ACCOMPANY PLANS DATED 12-16-13

WORD MARKINGS			
ITEM	ft²	ITEM	ft²
LANE	24	NO	14
POOL	23	BIKE	21
CAR	17	BUS	20
CLEAR	27	ONLY	22
KEEP	24	FWY	16

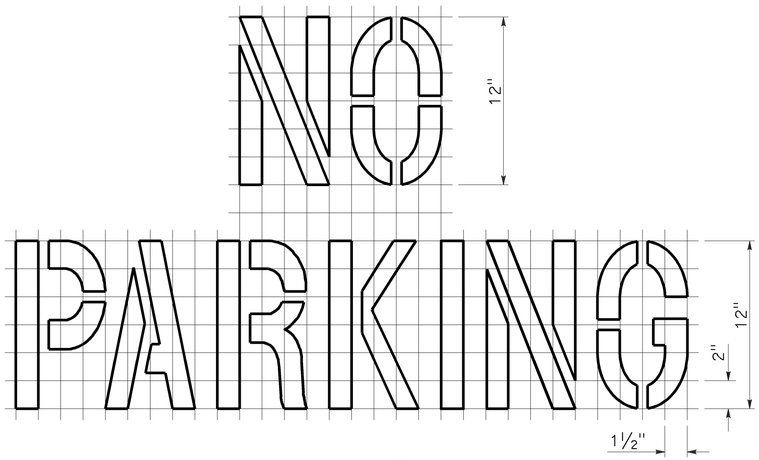

A=2 ft²
See Notes 6 and 7

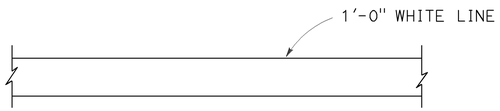

LIMIT LINE (STOP LINE)

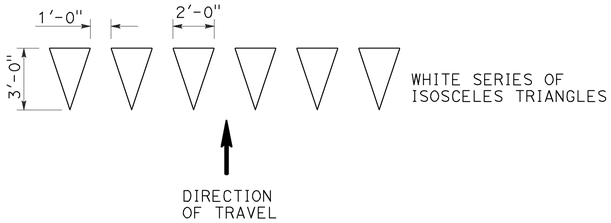

YIELD LINE

NOTES:

1. If a message consists of more than one word, it should read "UP", i.e., the first word should be nearest the driver.
2. The space between words should be at least four times the height of the characters for low speed roads, but not more than ten times the height of the characters. The space may be reduced appropriately where there is limited space because of local conditions.
3. Minor variations in dimensions may be accepted by the Engineer.
4. Portions of a letter, number or symbol may be separated by connecting segments not to exceed 2" in width.
5. The words "NO PARKING" pavement marking is to be used for parking facilities. For typical locations of markings, see Standard Plans A90A and A90B.
6. The words "NO PARKING", shall be painted in white letters no less than 1'-0" high on a contrasting background and located so that it is visible to traffic enforcement officials.

STATE OF CALIFORNIA
DEPARTMENT OF TRANSPORTATION

PAVEMENT MARKINGS
WORDS, LIMIT AND YIELD LINES

NO SCALE

RSP A24E DATED JULY 20, 2012 SUPERSEDES STANDARD PLAN A24E
DATED MAY 20, 2011 - PAGE 17 OF THE STANDARD PLANS BOOK DATED 2010.

REVISED STANDARD PLAN RSP A24E

2010 REVISED STANDARD PLAN RSP A24E

6-12-12

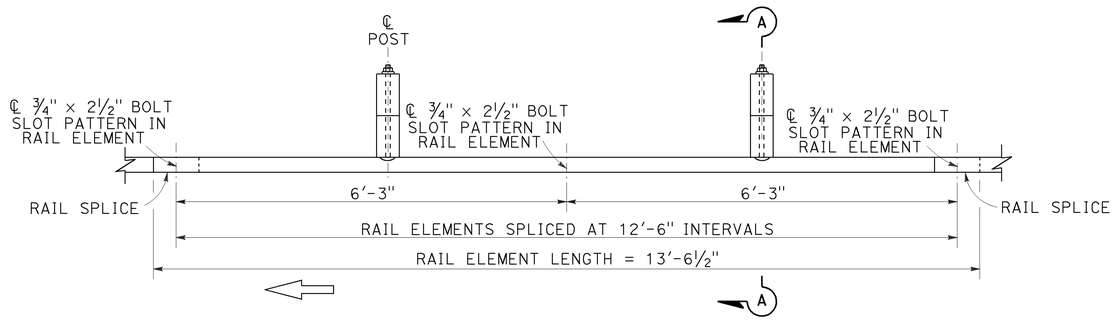

PLAN

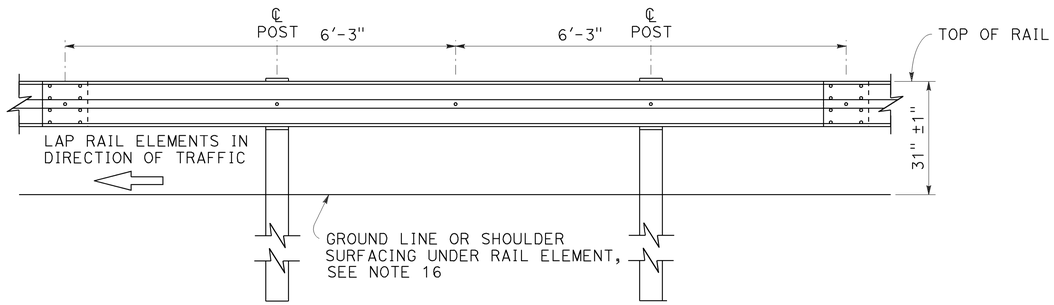

ELEVATION

MIDWEST GUARDRAIL SYSTEM WITH WOOD POST AND BLOCKS

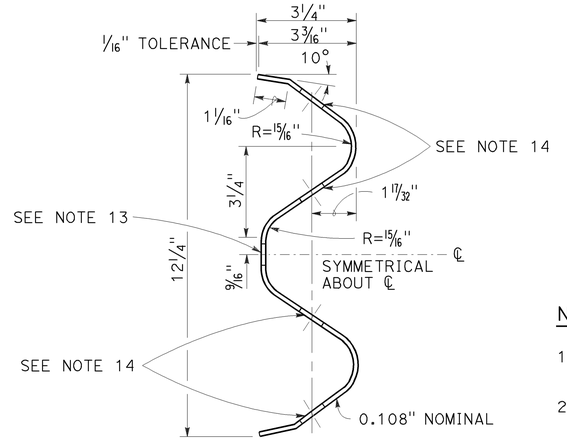

SECTION THRU RAIL ELEMENT

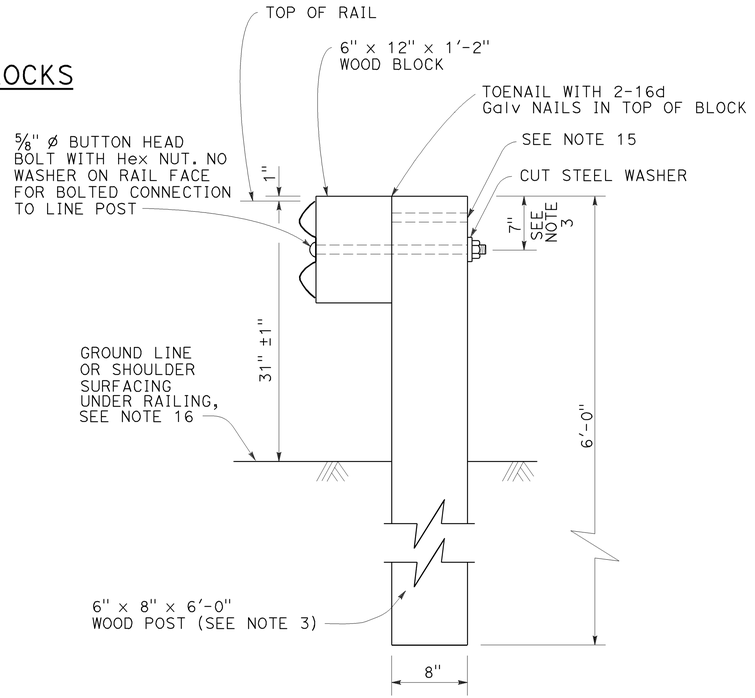

SECTION A-A

TYPICAL WOOD LINE POST INSTALLATION

See Note 4

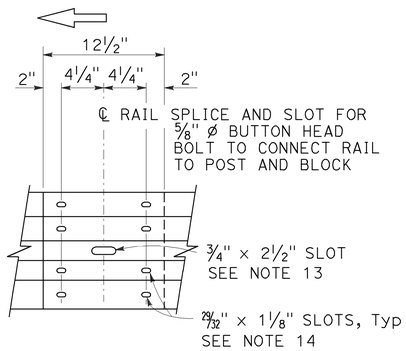

ELEVATION

RAIL ELEMENT SPLICE DETAIL

a) Connect the over lapped end of the rail elements with ⅝" ø × 1⅜" button head oval shoulder splice bolts inserted into the 29⁄32" × 1⅛" slots and bolted together with ⅝" ø recessed hex nuts. Recess of hex nut points toward rail element. A total of 8 bolts and nuts are to be used at each rail splice connection.

b) The ends of the rail elements are to be overlapped in the direction of traffic (see details).

c) Where end cap is to be attached to the end of a rail element, a total of 4 of the above described splice bolts and nuts are to be used.

Dist	COUNTY	ROUTE	POST MILES TOTAL PROJECT	SHEET No.	TOTAL SHEETS
08	SBd	247	1.8/9.6	167	196

Randell D. Hiatt
REGISTERED CIVIL ENGINEER

July 19, 2013
PLANS APPROVAL DATE

REGISTERED PROFESSIONAL ENGINEER — Randell D. Hiatt — No. C50200 — Exp. 6-30-15 — CIVIL — STATE OF CALIFORNIA

THE STATE OF CALIFORNIA OR ITS OFFICERS OR AGENTS SHALL NOT BE RESPONSIBLE FOR THE ACCURACY OR COMPLETENESS OF SCANNED COPIES OF THIS PLAN SHEET.

TO ACCOMPANY PLANS DATED 12-16-13

NOTES:

1. For details of steel post installations, see Revised Standard Plan RSP A77L2.
2. For details of standard hardware used to construct MGS, see Revised Standard Plan RSP A77M1.
3. For details of wood posts and wood blocks used to construct MGS, see Revised Standard Plan RSP A77N1.
4. For additional installation details, see Revised Standard Plan RSP A77N3.
5. MGS post spacing to be 6'-3" center to center, except as otherwise noted.
6. For MGS typical layouts, see the A77P, A77Q and A77R Series of Standard Plans.
7. If railing is connected to terminal system end treatment, use 31" height terminal system end treatment.
8. For MGS end anchor details, see Revised Standard Plans RSP A77S1 and RSP A77T2.
9. For details of MGS transition to bridge railing, see Revised Standard Plan RSP A77U4.
10. For additional details of MSG connection to bridge railing, see Revised Standard Plans RSP A77U1, RSP A77U2 and RSP A77V1.
11. For MGS connection details to abutments and walls, see Revised Standard Plan RSP A77U3.
12. For typical MGS delineation and dike positioning details, see Revised Standard Plan RSP A77N4.
13. Slotted hole for bolted connection of rail element to block and post. See "Section Thru Rail Element".
14. Slotted holes for splice bolts to overlap ends of rail element. See "Section Thru Rail Element".
15. Additional hole in uppermost portion of line post is for potential future adjustments of railing height. See Revised Standard Plan RSP A77N1.
16. Install posts in soil.

STATE OF CALIFORNIA
DEPARTMENT OF TRANSPORTATION

MIDWEST GUARDRAIL SYSTEM STANDARD RAILING SECTION (WOOD POST WITH WOOD BLOCK)

NO SCALE

RSP A77L1 DATED JULY 19, 2013 SUPPLEMENTS STANDARD PLANS BOOK DATED 2010.

REVISED STANDARD PLAN RSP A77L1

2010 REVISED STANDARD PLAN RSP A77L1

7-3-13

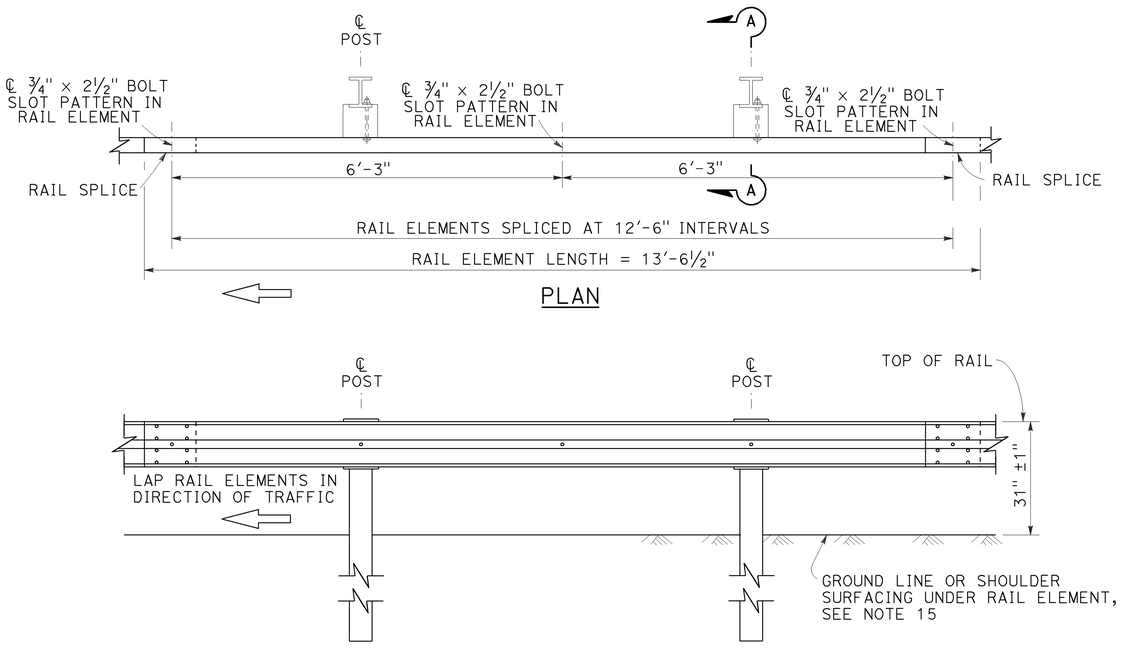

MIDWEST GUARDRAIL SYSTEM WITH STEEL POSTS AND NOTCHED WOOD OR NOTCHED RECYCLED PLASTIC BLOCKS

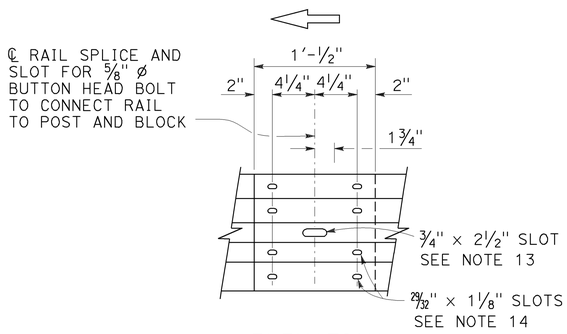

ELEVATION

RAIL ELEMENT SPLICE DETAIL

a) Connect the over lapped end of the rail elements with ⅝" ø x 1⅜" button head oval shoulder splice bolts inserted into the 29/32" x 1⅛" slots and bolted together with ⅝" ø recessed hex nuts. Recess of hex nut points toward rail element. A total of 8 bolts and nuts are to be used at each rail splice connection.

b) The ends of the rail elements are to be overlapped in the direction of traffic (see details).

c) Where end cap is to be attached to the end of a rail element, a total of 4 of the above described splice bolts and nuts are to be used.

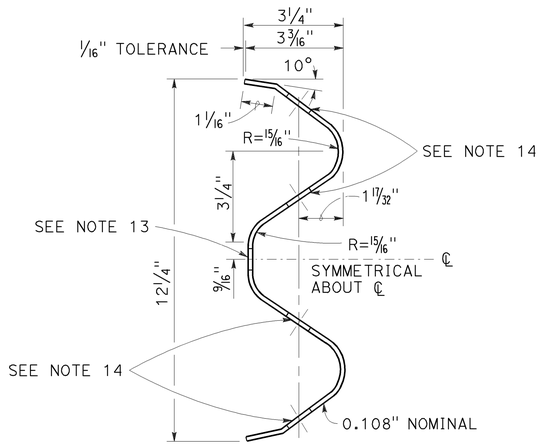

SECTION THRU RAIL ELEMENT

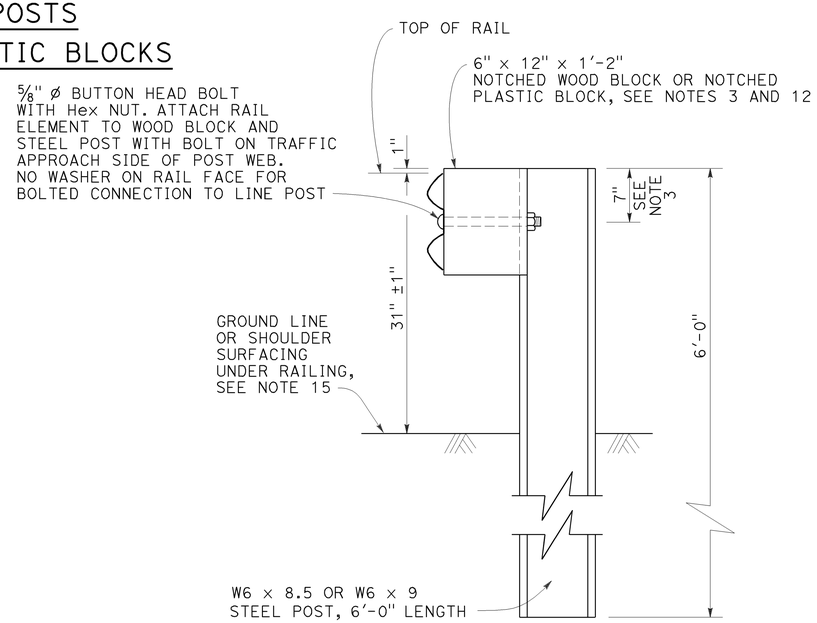

SECTION A-A

TYPICAL STEEL LINE POST INSTALLATION

See Note 4

Dist	COUNTY	ROUTE	POST MILES TOTAL PROJECT	SHEET No.	TOTAL SHEETS
08	SBd	247	1.8/9.6	168	196

Randell D. Hiatt
REGISTERED CIVIL ENGINEER

July 19, 2013
PLANS APPROVAL DATE

REGISTERED PROFESSIONAL ENGINEER — Randell D. Hiatt — No. C50200 — Exp. 6-30-15 — CIVIL — STATE OF CALIFORNIA

THE STATE OF CALIFORNIA OR ITS OFFICERS OR AGENTS SHALL NOT BE RESPONSIBLE FOR THE ACCURACY OR COMPLETENESS OF SCANNED COPIES OF THIS PLAN SHEET.

TO ACCOMPANY PLANS DATED 12-16-13

NOTES:

1. For details of wood post installations, see Revised Standard Plan RSP A77L1.
2. For details of standard hardware used to construct MGS, see Revised Standard Plan RSP A77M1.
3. For details of steel posts and notched wood blocks used to construct MGS, see Revised Standard Plan RSP A77N2.
4. For additional installation details, see Revised Standard Plan RSP A77N3.
5. MGS post spacing to be 6'-3" center to center, except as otherwise noted.
6. For MGS typical layouts, see the A77P, A77Q and A77R Series of Standard Plans.
7. If railing is connected to terminal system end treatment, use 31" height terminal system end treatment.
8. For MGS end anchor details, see Revised Standard Plans RSP A77S1 and RSP A77T2.
9. For details of MGS transition to bridge railing, see Revised Standard Plan RSP A77U4.
10. For additional details of MGS connection to bridge railings, see Revised Standard Plans RSP A77U1, RSP A77U2 and RSP A77V1.
11. For dike positioning and MGS delineation details, see Revised Standard Plan RSP A77N4.
12. Notched face of block faces steel post.
13. Slotted hole for bolted connection of rail element to block and post. See "Section Thru Rail Element".
14. Slotted holes for splice bolts to overlap ends of rail element. See "Section Thru Rail Element".
15. Install posts in soil.

STATE OF CALIFORNIA
DEPARTMENT OF TRANSPORTATION

MIDWEST GUARDRAIL SYSTEM STANDARD RAILING SECTION (STEEL POST WITH NOTCHED WOOD OR NOTCHED RECYCLED PLASTIC BLOCK)

NO SCALE

RSP A77L2 DATED JULY 19, 2013 SUPPLEMENTS THE STANDARD PLANS BOOK DATED 2010.

REVISED STANDARD PLAN RSP A77L2

2010 REVISED STANDARD PLAN RSP A77L2

7-3-13

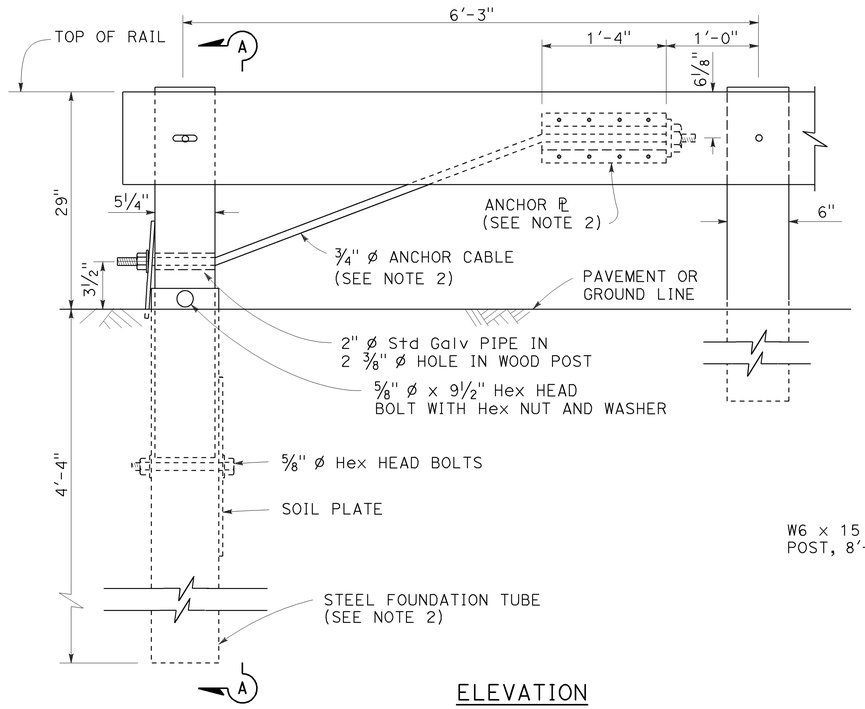

ELEVATION
END ANCHOR
ASSEMBLY (TYPE SFT)

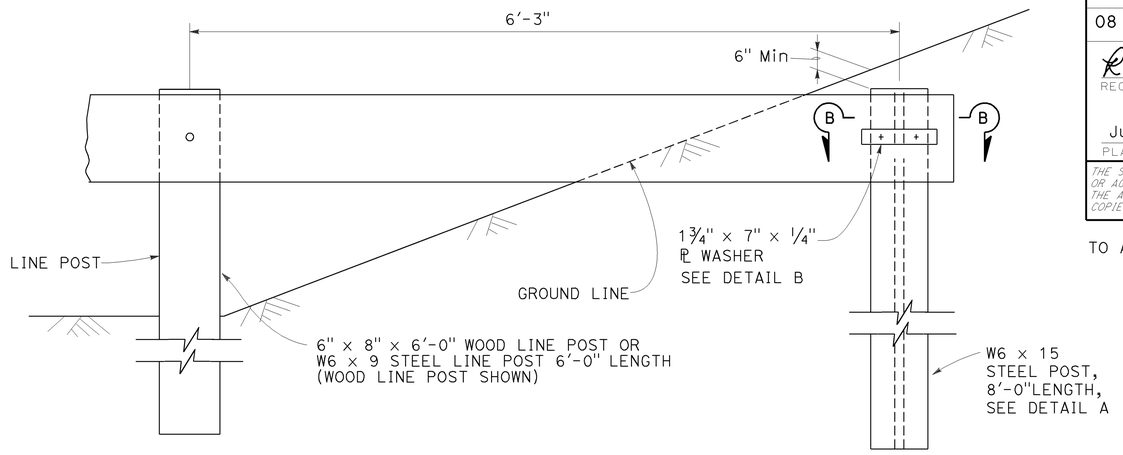

BURIED POST END ANCHOR

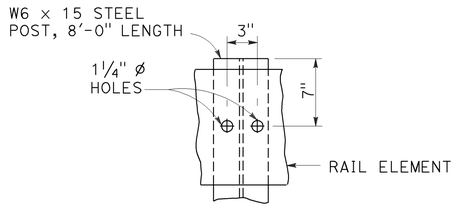

DETAIL A

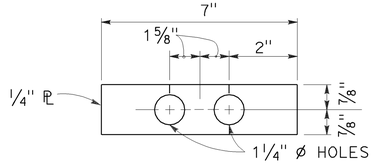

DETAIL B

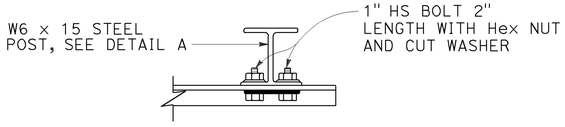

SECTION B-B

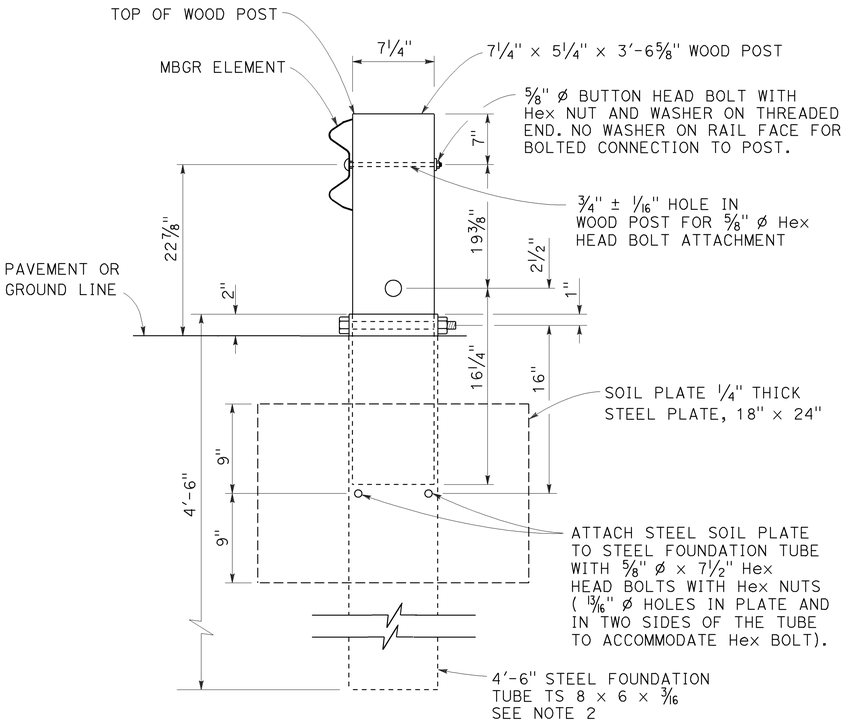

SECTION A-A

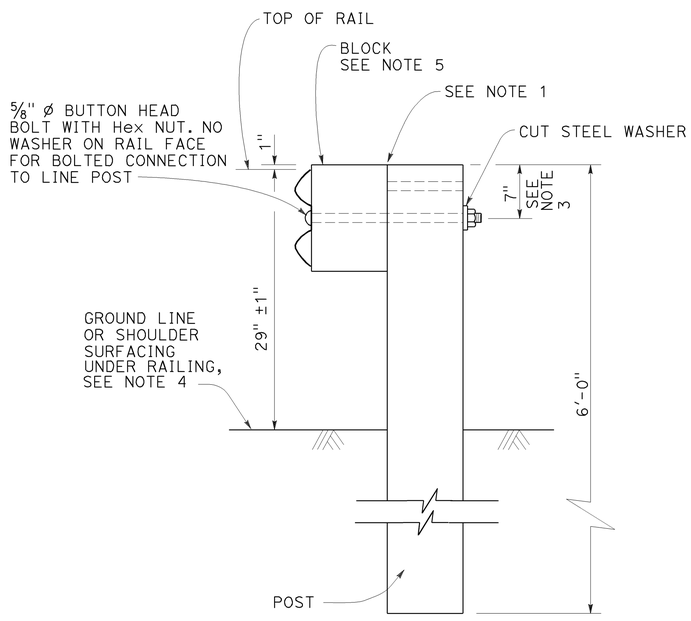

TYPICAL LINE
POST INSTALLATION

NOTES:

1. For wood post and wood block, toenail with 2-16d Galv nails in top of block. For steel post and notched wood or plastic block, notched face of block faces steel post.
2. A 6'-0" Length steel foundation tube, TS 8 x 6 x 3/16, without a soil plate, may be furnished and installed in place of the 4'-6" length steel foundation tube and soil plate shown, Minimum embadment of the 6'-0" length tube shall be 5'-9". A 5/8" ø Hex head bolt and nut shall be installed in the hole in the 6'-0" length tube to keep the wood post from dropping into the tube.
3. To connect railing to 27" terminal system end treatment, transition the top of railing height at a ratio of 120:1 to terminal system end treatment height plus one 12'-6" standard railing section at the transitioned height for a horizontal connection to the end treatment.
4. Install posts in soil.
5. See Revised Standard Plans RSP A77N1 and RSP A77N2 for details.
6. Holes excavation in the slope to construct the buried post end anchor shall be backfilled with selected earth, placed in layers approximately 1'-0" thick. Each layer shall be moistened and thoroughly compacted.

Dist	COUNTY	ROUTE	POST MILES TOTAL PROJECT	SHEET No.	TOTAL SHEETS
08	SBd	247	1.8/9.6	169	196

Randell D. Hiatt
REGISTERED CIVIL ENGINEER

REGISTERED PROFESSIONAL ENGINEER
Randell D. Hiatt
No. C50200
Exp. 6-30-15
CIVIL
STATE OF CALIFORNIA

July 19, 2013
PLANS APPROVAL DATE

THE STATE OF CALIFORNIA OR ITS OFFICERS OR AGENTS SHALL NOT BE RESPONSIBLE FOR THE ACCURACY OR COMPLETENESS OF SCANNED COPIES OF THIS PLAN SHEET.

TO ACCOMPANY PLANS DATED _____

STATE OF CALIFORNIA
DEPARTMENT OF TRANSPORTATION

METAL BEAM GUARD RAILING RECONSTRUCT INSTALLATION

NO SCALE

RSP A77L3 DATED JULY 19, 2013 SUPPLEMENTS THE STANDARD PLANS BOOK DATED 2010.

REVISED STANDARD PLAN RSP A77L3

2010 REVISED STANDARD PLAN RSP A77L3

7-16-13

Dist	COUNTY	ROUTE	POST MILES TOTAL PROJECT	SHEET No.	TOTAL SHEETS
08	SBd	247	1.8/9.6	170	196

Randell D. Hiatt
REGISTERED CIVIL ENGINEER

July 19, 2013
PLANS APPROVAL DATE

REGISTERED PROFESSIONAL ENGINEER
Randell D. Hiatt
No. C50200
Exp. 6-30-15
CIVIL
STATE OF CALIFORNIA

THE STATE OF CALIFORNIA OR ITS OFFICERS OR AGENTS SHALL NOT BE RESPONSIBLE FOR THE ACCURACY OR COMPLETENESS OF SCANNED COPIES OF THIS PLAN SHEET.

TO ACCOMPANY PLANS DATED 12-16-13

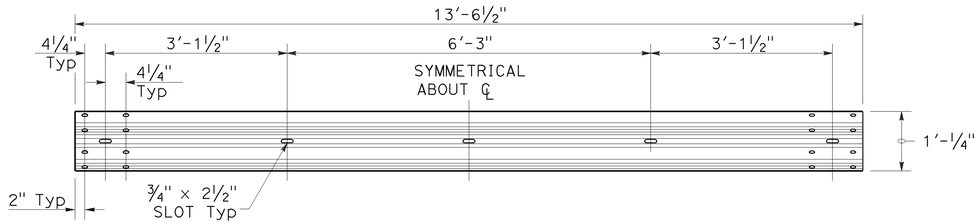

TYPICAL RAIL ELEMENT

NOTE:

1. Slotted holes for splice bolts to overlap ends of rail element.

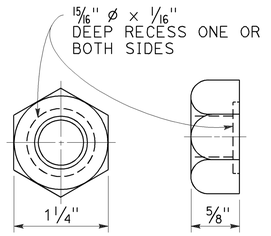

⅝" ø RECESS NUT

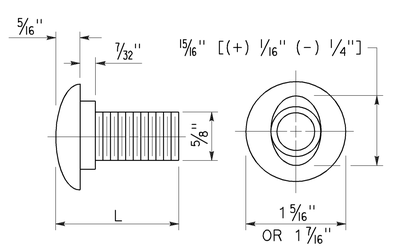

⅝" ø BUTTON HEAD BOLT

BUTTON HEAD BOLT

L	THREAD LENGTH
1⅜"	FULL THREAD LENGTH
2"	FULL THREAD LENGTH
10"	4" Min THREAD LENGTH
18"	4" Min THREAD LENGTH
20"	4" Min THREAD LENGTH
22"	4" Min THREAD LENGTH
26"	4" Min THREAD LENGTH
36"	4" Min THREAD LENGTH
** 2¾"	2" Min THREAD LENGTH
** 19"	4" Min THREAD LENGTH

** For nested rail applications.

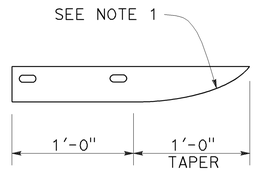

PLAN

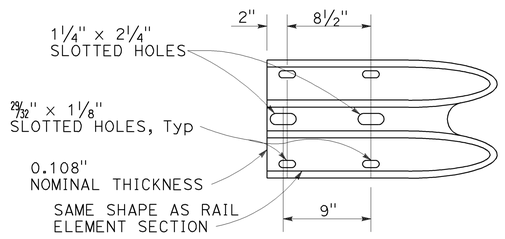

ELEVATION

END CAP (TYPE A)

STATE OF CALIFORNIA
DEPARTMENT OF TRANSPORTATION

MIDWEST GUARDRAIL SYSTEM STANDARD HARDWARE

NO SCALE

RSP A77M1 DATED JULY 19, 2013 SUPPLEMENTS THE STANDARD PLANS BOOK DATED 2010.

REVISED STANDARD PLAN RSP A77M1

2010 REVISED STANDARD PLAN RSP A77M1

7-3-13

Dist	COUNTY	ROUTE	POST MILES TOTAL PROJECT	SHEET No.	TOTAL SHEETS
08	SBd	247	1.8/9.6	171	196

Randell D. Hiatt
REGISTERED CIVIL ENGINEER

July 19, 2013
PLANS APPROVAL DATE

REGISTERED PROFESSIONAL ENGINEER
Randell D. Hiatt
No. C50200
Exp. 6-30-15
CIVIL
STATE OF CALIFORNIA

THE STATE OF CALIFORNIA OR ITS OFFICERS OR AGENTS SHALL NOT BE RESPONSIBLE FOR THE ACCURACY OR COMPLETENESS OF SCANNED COPIES OF THIS PLAN SHEET.

TO ACCOMPANY PLANS DATED 12-16-13

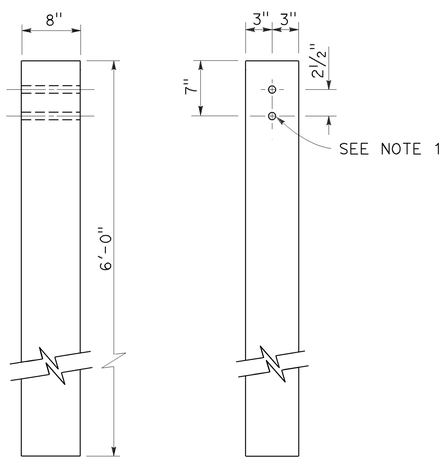

SIDE FRONT

6" x 8" WOOD POST
See Note 3

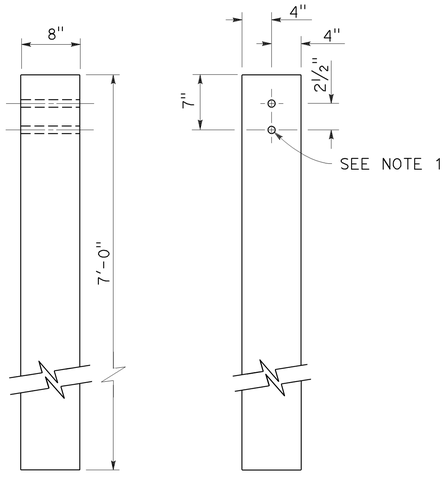

SIDE FRONT

8" x 8" WOOD POST
See Note 4

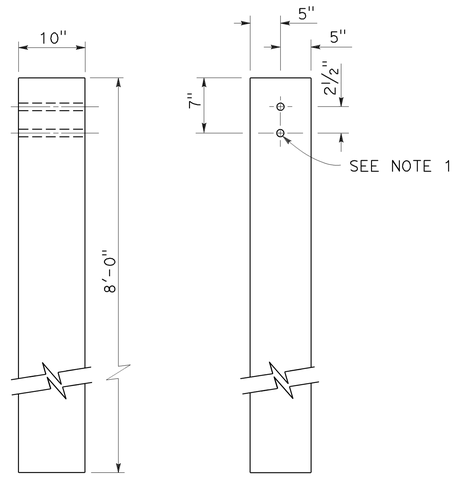

SIDE FRONT

10" x 10" WOOD POST
See Note 5

NOTES:

1. All holes in wood posts and blocks shall be ¾" Dia ± 1/16".
2. Dimensions shown for wood post are nominal.
3. This post and block combination used for standard line post sections of MGS.
4. This post and 8" x 12" block combination used for line post sections of MGS on narrow roadways.
5. This post and 8" x 12" block combination is typically used where strengthened line post sections of MGS are warranted to shield fixed objects.
6. See Revised Standard Plan RSP A77L3 for use of 6" x 8" and 8" x 8" wood blocks.

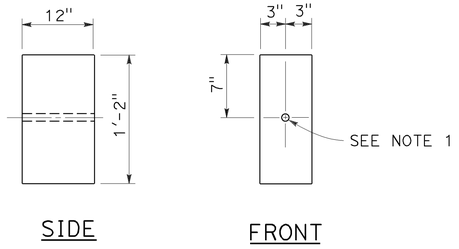

SIDE FRONT

6" x 12" WOOD BLOCK
See Note 3

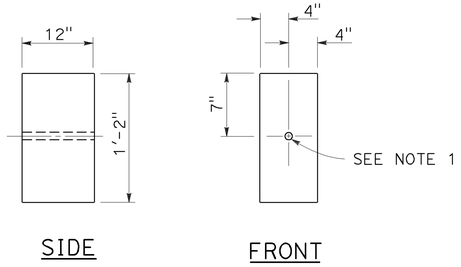

SIDE FRONT

8" x 12" WOOD BLOCK

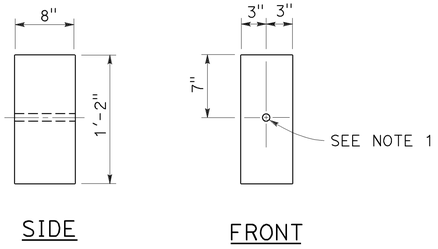

SIDE FRONT

6" x 8" WOOD BLOCK
Only for use with metal beam guard rail see Note 6

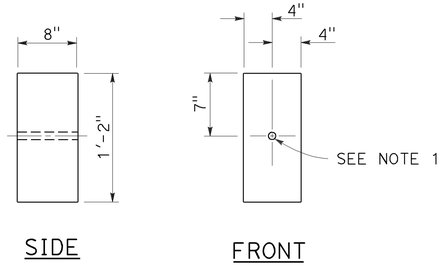

SIDE FRONT

8" x 8" WOOD BLOCK
Only for use with metal beam guard rail see Note 6

STATE OF CALIFORNIA
DEPARTMENT OF TRANSPORTATION

MIDWEST GUARDRAIL SYSTEM WOOD POST AND WOOD BLOCK DETAILS

NO SCALE

RSP A77N1 DATED JULY 19, 2013 SUPPLEMENTS THE STANDARD PLANS BOOK DATED 2010.

REVISED STANDARD PLAN RSP A77N1

2010 REVISED STANDARD PLAN RSP A77N1

7-3-13

Dist	COUNTY	ROUTE	POST MILES TOTAL PROJECT	SHEET No.	TOTAL SHEETS
08	SBd	247	1.8/9.6	172	196

Randell D. Hiatt
REGISTERED CIVIL ENGINEER

July 19, 2013
PLANS APPROVAL DATE

REGISTERED PROFESSIONAL ENGINEER
Randell D. Hiatt
No. C50200
Exp. 6-30-15
CIVIL
STATE OF CALIFORNIA

THE STATE OF CALIFORNIA OR ITS OFFICERS OR AGENTS SHALL NOT BE RESPONSIBLE FOR THE ACCURACY OR COMPLETENESS OF SCANNED COPIES OF THIS PLAN SHEET.

TO ACCOMPANY PLANS DATED 12-16-13

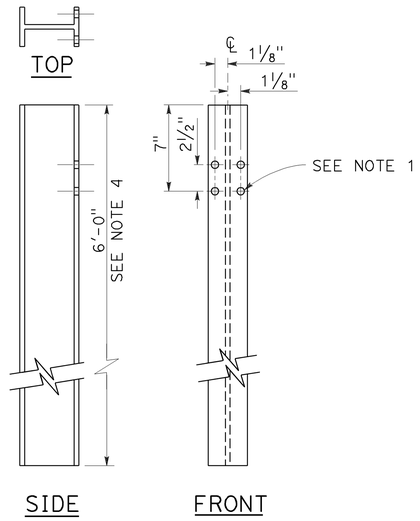

W6 x 9 OR W6 x 8.5 STEEL POST

See Note 4

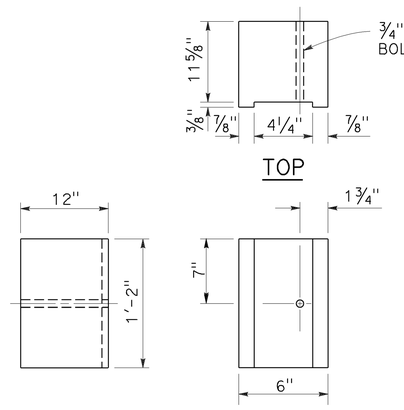

6" x 12" NOTCHED WOOD BLOCK

See Notes 2 and 3

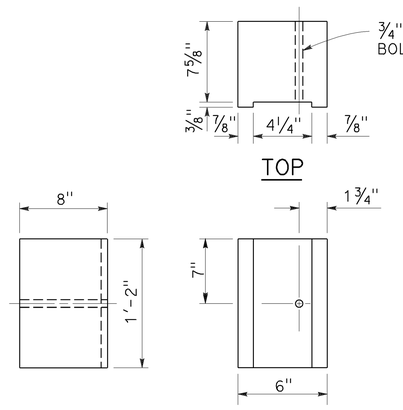

6" x 8" NOTCHED WOOD BLOCK

Only for use with metal beam guard railing. See Note 5

NOTES:

1. All holes in steel post shall be 13/16" Dia maximum.
2. Dimensions shown for wood block are nominal.
3. Notched face of block faces steel post.
4. 6'-0" length posts to be used for typical roadway installation. 7'-0" length posts to be used for narrow roadway installation. See Revised Standard Plan RSP A77N3.
5. See Revised Standard Plan RSP A77L3 for use of 6" x 8" and 8" x 8" notched wood blocks.
6. This post and 8" x 12" block combination to be used for line post sections of MGS on narrow roadways and where strengthened line post sections of MGS are warranted to shield fixed objects.

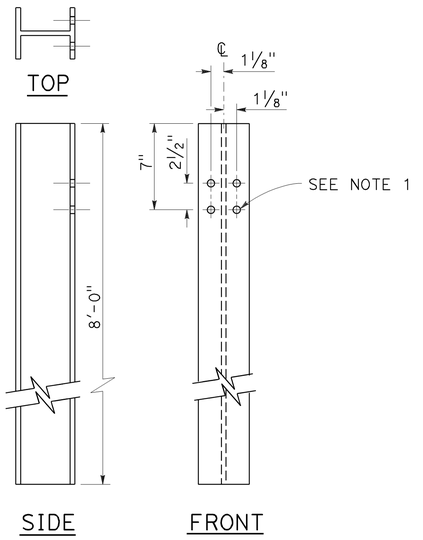

W6 x 15 STEEL POST

See Note 6

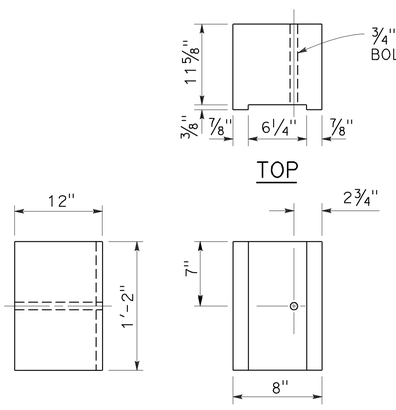

8" x 12" NOTCHED WOOD BLOCK

See Notes 2 and 3

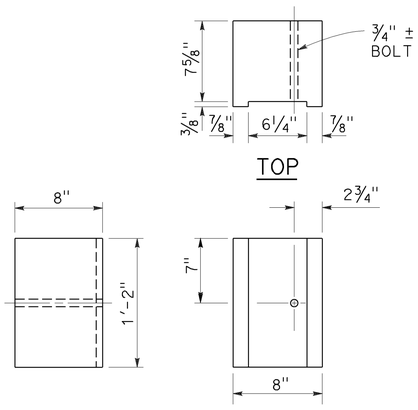

8" x 8" NOTCHED WOOD BLOCK

Only for use with metal beam guard railing. See Note 5

STATE OF CALIFORNIA
DEPARTMENT OF TRANSPORTATION

MIDWEST GUARDRAIL SYSTEM STEEL POST AND NOTCHED WOOD BLOCK DETAILS

NO SCALE

RSP A77N2 DATED JULY 19, 2013 SUPPLEMENTS THE STANDARD PLANS BOOK DATED 2010.

REVISED STANDARD PLAN RSP A77N2

2010 REVISED STANDARD PLAN RSP A77N2

7-3-13

Dist	COUNTY	ROUTE	POST MILES TOTAL PROJECT	SHEET No.	TOTAL SHEETS
08	SBd	247	1.8/9.6	173	196

Randell D. Hiatt
REGISTERED CIVIL ENGINEER

July 19, 2013
PLANS APPROVAL DATE

REGISTERED PROFESSIONAL ENGINEER — Randell D. Hiatt — No. C50200 — Exp. 6-30-15 — CIVIL — STATE OF CALIFORNIA

THE STATE OF CALIFORNIA OR ITS OFFICERS OR AGENTS SHALL NOT BE RESPONSIBLE FOR THE ACCURACY OR COMPLETENESS OF SCANNED COPIES OF THIS PLAN SHEET.

TO ACCOMPANY PLANS DATED 12-16-13

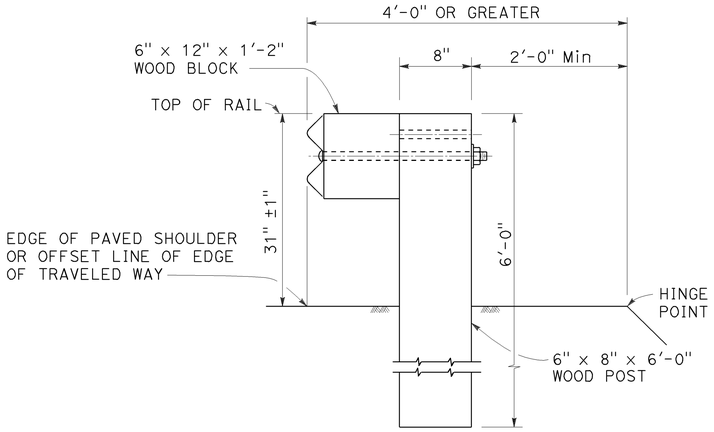

DETAIL A

TYPICAL ROADWAY INSTALLATION

See Note 1

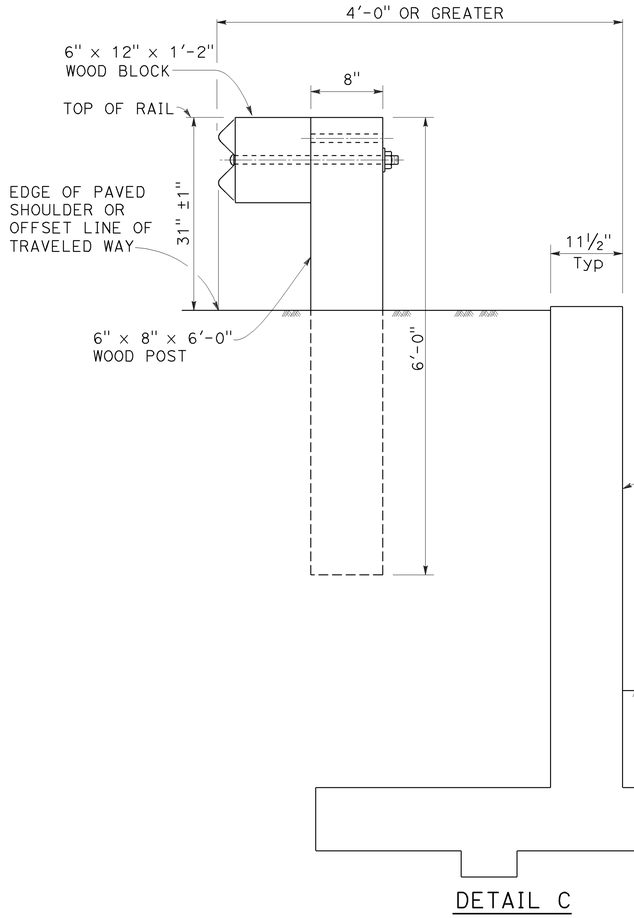

DETAIL C

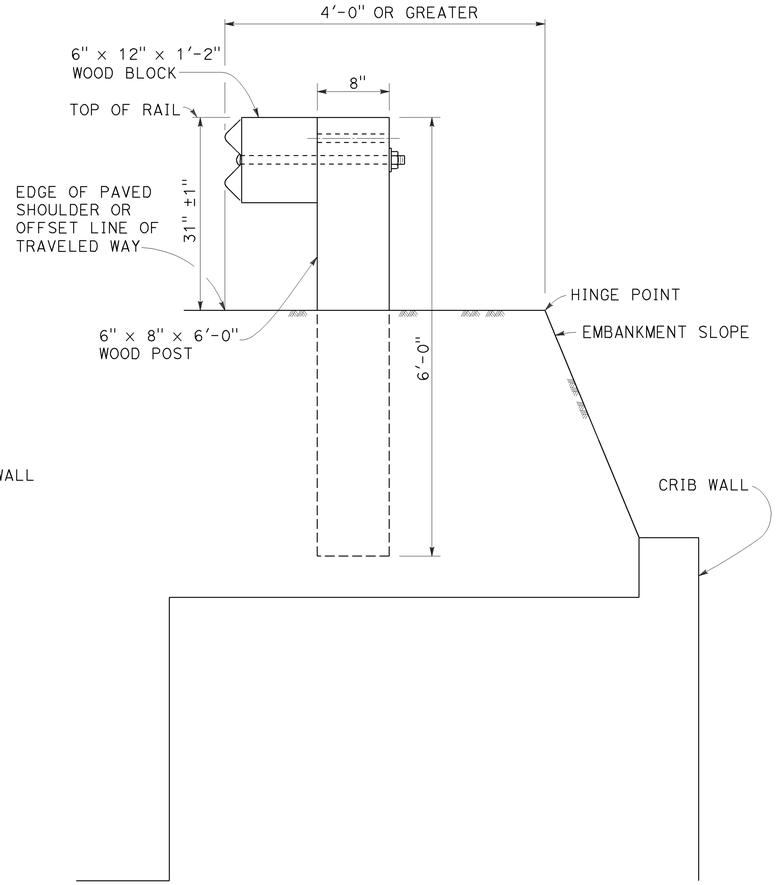

DETAIL D

INSTALLATION AT EARTH RETAINING WALLS

DETAIL B

NARROW ROADWAY INSTALLATION

See Note 1

POST EMBEDMENT

NOTES:

1. These installation details also applicable to steel line post installations. For Detail A, C, and D, where steel line post installations are constructed, W6 x 8.5 or W6 x 9 steel post, 6'-0" in length, with 6" x 12" x 1'-2" notched wood blocks or notched recycled plastic blocks are to be used in place of the size of wood post and wood block shown. For Detail B, where steel line post installations are constructed, or W6 x 15 steel post, 8'-0" in length, with 8" x 12" x 1'-2" notched wood blocks or notched recycled plastic blocks are to be used in place of the size of wood post and wood block shown. For additional installation details, see Revised Standard Plan RSP A77L1 and RSP A77L2.
2. Where the distance between the face of the rail and the hinge point is less than 2'-6", see the Project Plans for special details.
3. For dike positioning with MGS installations, see Revised Standard Plan RSP A77N4.

STATE OF CALIFORNIA
DEPARTMENT OF TRANSPORTATION

MIDWEST GUARDRAIL SYSTEM TYPICAL LINE POST EMBEDMENT AND HINGE POINT OFFSET DETAILS

NO SCALE

RSP A77N3 DATED JULY 19, 2013 SUPPLEMENTS THE STANDARD PLANS BOOK DATED 2010.

REVISED STANDARD PLAN RSP A77N3

2010 REVISED STANDARD PLAN RSP A77N3

7-3-13

Dist	COUNTY	ROUTE	POST MILES TOTAL PROJECT	SHEET No.	TOTAL SHEETS
08	SBd	247	1.8/9.6	174	196

Randell D. Hiatt
REGISTERED CIVIL ENGINEER

July 19, 2013
PLANS APPROVAL DATE

REGISTERED PROFESSIONAL ENGINEER
Randell D. Hiatt
No. C50200
Exp. 6-30-15
CIVIL
STATE OF CALIFORNIA

THE STATE OF CALIFORNIA OR ITS OFFICERS OR AGENTS SHALL NOT BE RESPONSIBLE FOR THE ACCURACY OR COMPLETENESS OF SCANNED COPIES OF THIS PLAN SHEET.

TO ACCOMPANY PLANS DATED 12-16-13

NOTES:

1. When necessary to place dike more than 7" in front of face of MGS, only Type C dike may be used. For dike details, see Revised Standard Plan RSP A87B.
2. For standard railing post embedment, see Revised Standard Plan RSP A77N3.
3. MGS delineation to be used where shown on the Project Plans.
4. When dike or curb is placed under MGS, the maximum height of the dike or curb shall be 6". Mountable dike should not be used. For dike and curb details, see Revised Standard Plans RSP A87A and RSP A87B.
5. For details of typical distance between the face of rail and hinge point, see Revised Standard Plan RSP A77N3.
6. For steel line posts, use 1/4 - 20 self-tapping screws in 0.22" diameter holes or 1/4" bolts in 9/32" diameter holes.

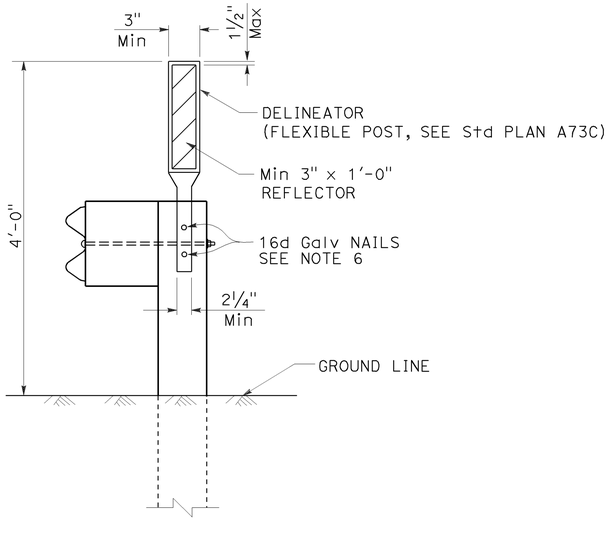

MGS DELINEATION

See Note 3

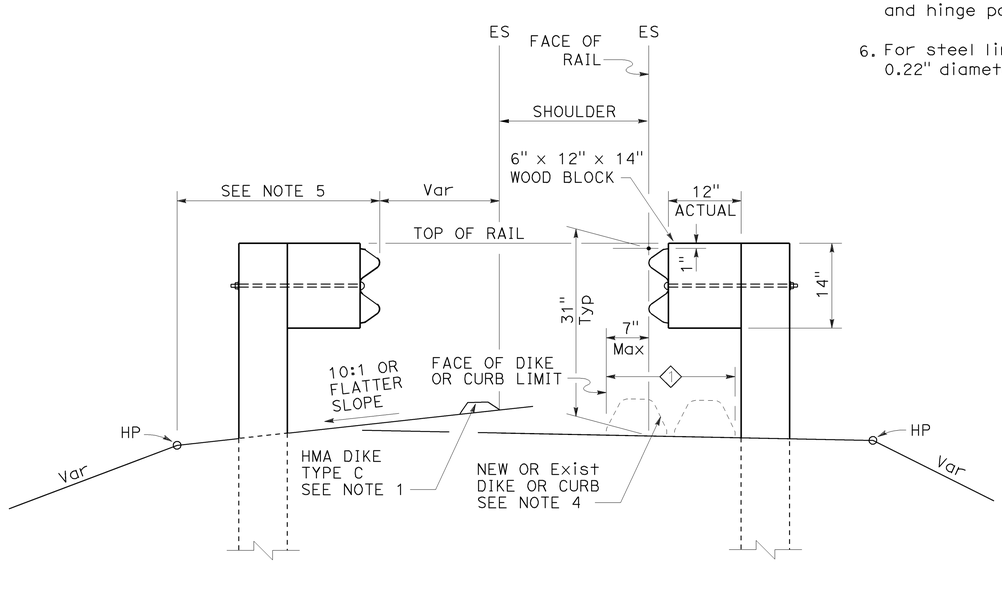

DIKE POSITIONING

See Note 1

◇1 PERMISSIBLE DIKE OR CURB PLACEMENT AREA

STATE OF CALIFORNIA
DEPARTMENT OF TRANSPORTATION

MIDWEST GUARDRAIL SYSTEM TYPICAL RAILING DELINEATION AND DIKE POSITIONING DETAILS

NO SCALE

RSP A77N4 DATED JULY 19, 2013 SUPPLEMENTS THE STANDARD PLANS BOOK DATED 2010.

REVISED STANDARD PLAN RSP A77N4

2010 REVISED STANDARD PLAN RSP A77N4

7-10-13

Dist	COUNTY	ROUTE	POST MILES TOTAL PROJECT	SHEET No.	TOTAL SHEETS
08	SBd	247	1.8/9.6	175	196

Randell D. Hiatt
REGISTERED CIVIL ENGINEER

July 19, 2013
PLANS APPROVAL DATE

REGISTERED PROFESSIONAL ENGINEER — Randell D. Hiatt — No. C50200 — Exp. 6-30-15 — CIVIL — STATE OF CALIFORNIA

THE STATE OF CALIFORNIA OR ITS OFFICERS OR AGENTS SHALL NOT BE RESPONSIBLE FOR THE ACCURACY OR COMPLETENESS OF SCANNED COPIES OF THIS PLAN SHEET.

TO ACCOMPANY PLANS DATED _____

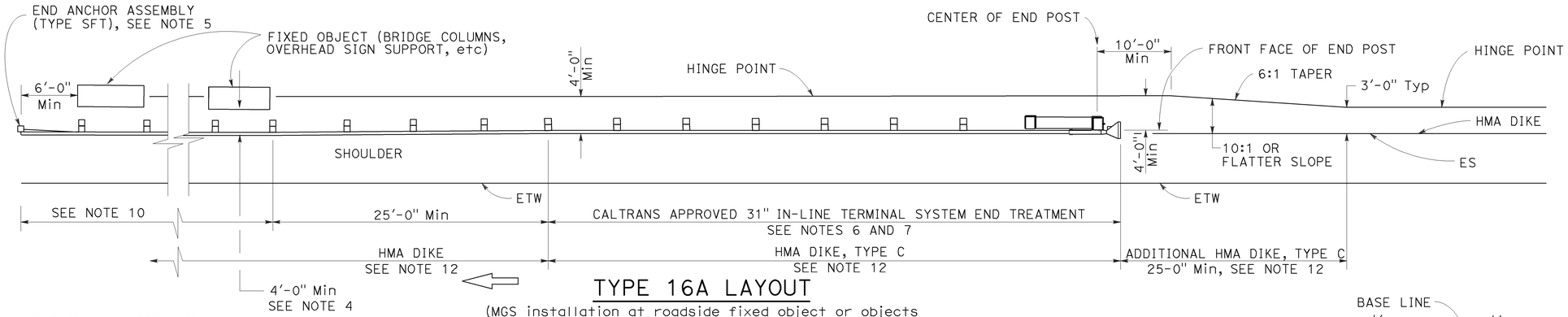

TYPE 16A LAYOUT

(MGS installation at roadside fixed object or objects with 31" in-line end treatment at traffic approach end of railing)
See Notes 11 and 12

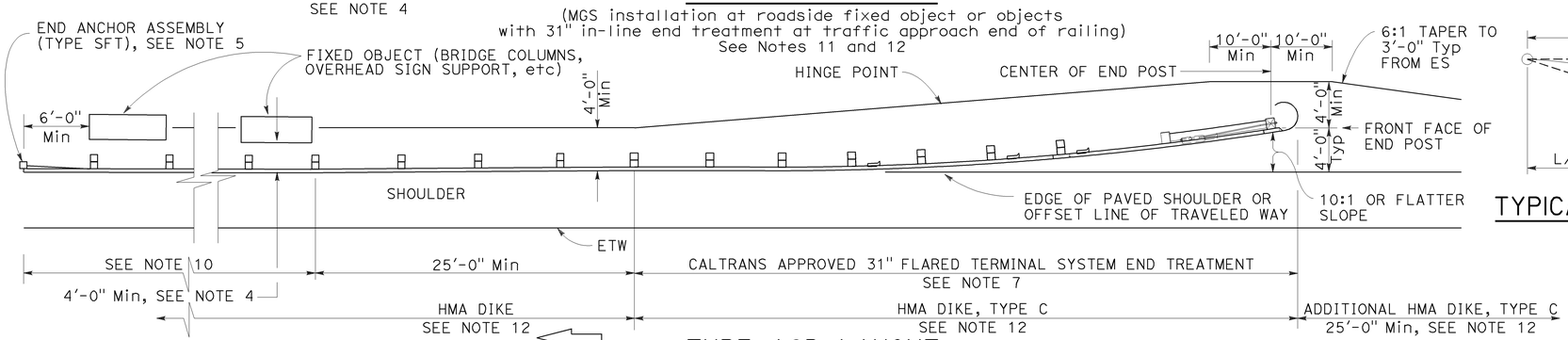

TYPE 16B LAYOUT

(MGS installation at roadside fixed object or objects with 31' flared end treatment at traffic approach end of railing)
See Notes 11 and 12

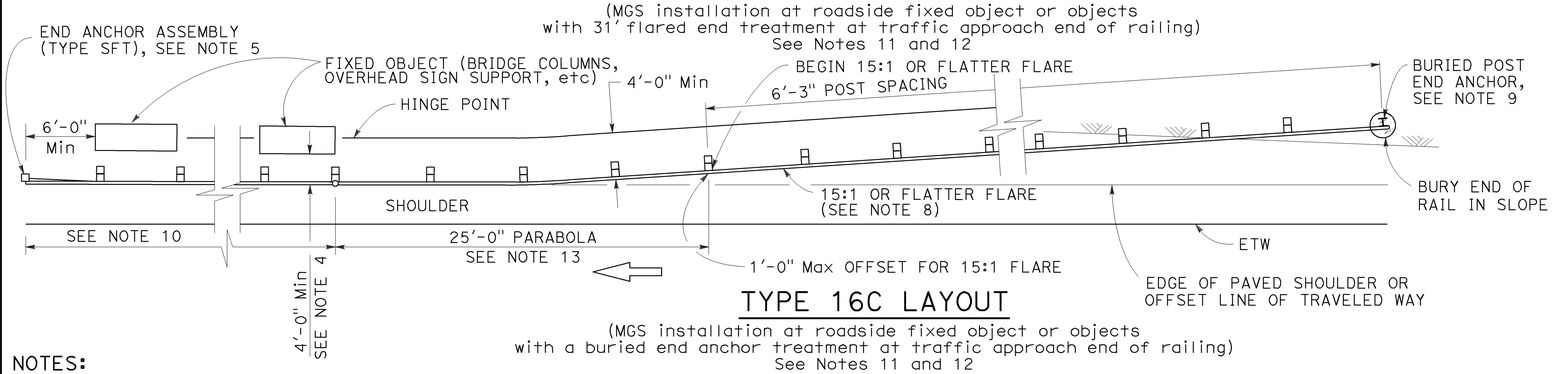

TYPE 16C LAYOUT

(MGS installation at roadside fixed object or objects with a buried end anchor treatment at traffic approach end of railing)
See Notes 11 and 12

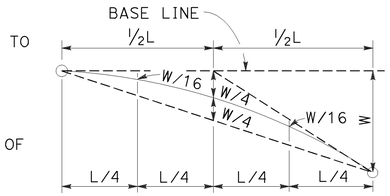

TYPICAL PARABOLIC LAYOUT

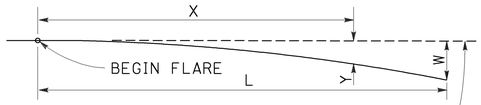

BASE LINE (EDGE OF PAVED SHOULDER OR OFFSET LINE OF EDGE OF TRAVELED WAY)

$$Y = \frac{WX^2}{L^2}$$

Y = OFFSET FROM BASE LINE
W = MAXIMUM OFFSET
X = DISTANCE ALONG BASE LINE
L = LENGTH OF FLARE

PARABOLIC FLARE OFFSETS

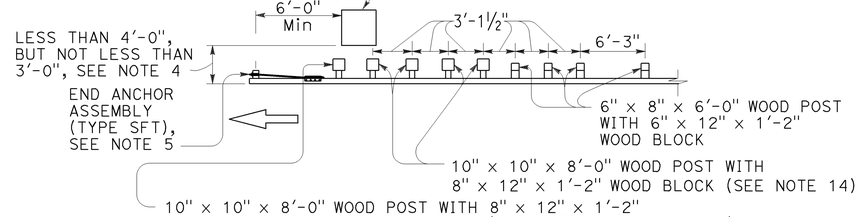

NOTE A: For a series of fixed objects (bridge columns, overhead sign supports, etc.) additional 10" x 10" x 8'-0" wood post with 8" x 12" x 1'-2" wood blocks at 3'-1½" center to center spacing are to be used between fixed objects.

STRENGTHENED MIDWEST GUARDRAIL SYSTEM SECTIONS FOR FIXED OBJECT

Use strengthened MGS sections with Types 16A, 16B or 16C layouts where minimum clearance between the face of the railing and fixed object(s) is less than 4'-0", but not less than 3'-0". See Note 4

NOTES:

1. Line post, blocks and hardware to be used are shown on Revised Standard Plans RSP A77L1, RSP A77L2, RSP A77M1, RSP A77N1 and RSP A77N2.
2. MGS post spacing to be 6'-3" center to center, except as otherwise noted.
3. Except as noted, line posts are 6" x 8" x 6'-0" wood with 6" x 12" x 1'-2" wood blocks. W6 x 8.5 or W6 x 9 steel posts, 6'-0" in length, with 6" x 12" x 1'-2" notched wood blocks or notched recycled plastic blocks may be used for 6" x 8" x 6'-0" wood line posts with 6" x 12" x 1'-2" wood blocks where applicable and when specified.
4. A 4'-0" minimum clearance is required between the face of the railing and the face of a fixed object located directly behind MGS sections with post spacing of 6'-3". Construct MGS as shown in the detail "Strengthened Midwest Guardrail System Sections for Fixed Object" on this plan, where the clearance between the face of the railing and the face of a fixed object is less than 4'-0", but not less than 3'-0". Where the clearance is less than 3'-0", a concrete wall or barrier should be constructed to shield the fixed object(s).
5. For End Anchor Assembly (Type SFT) details, see Revised Standard Plan RSP A77S1.
6. 31" in-line terminal system end treatments are used where site conditions will not accommodate a 31" flared end treatment.
7. The type of 31" terminal system to be used will be shown on the Project Plans.
8. The 15:1 or flatter flare used with Type 16C Layout is based on the edge of the paved shoulder or offset line of edge of the traveled way. The length of MGS within the 15:1 or flatter flare is based on site conditions and should be a length equal to multiples of 12'-6".
9. For details of the Buried Post End Anchor used with Type 16C Layout, see Revised Standard Plan RSP A77T2.
10. As site conditions dictate, construct additional MGS to shield fixed object(s). Additional MGS length equal to multiples of 12'-6". Post spacing at 6'-3" except as specified in Note 4.
11. Layout Types 16A, 16B or 16C are typically used where MGS is recommended to shield roadside fixed object(s) and a crashworthy 31" end treatment is required for only one direction of traffic.
12. Where placement of dike is required with MGS, see Revised Standard Plan RSP A77N4 for dike positioning details.
13. For typical flare offsets for 25'-0" length parabola with maximum offset of 1'-0", see Revised Standard Plan RSP A77P1.
14. W6 x 15 steel post, 8'-0" in length, with 8" x 12" x 1'-2" notched wood block or notched recycled plastic blocks may be used in place of the 10" x 10" x 8'-0" wood post with 8" x 12" x 1'-2" wood block shown in the detail "Strengthened Midwest Guardrail System Sections for Fixed Object".

STATE OF CALIFORNIA
DEPARTMENT OF TRANSPORTATION

MIDWEST GUARDRAIL SYSTEM TYPICAL LAYOUTS FOR ROADSIDE FIXED OBJECTS

NO SCALE

RSP A77R3 DATED JULY 19, 2013 SUPPLEMENTS THE STANDARD PLANS BOOK DATED 2010.

REVISED STANDARD PLAN RSP A77R3

2010 REVISED STANDARD PLAN RSP A77R3

6-20-13

Dist	COUNTY	ROUTE	POST MILES TOTAL PROJECT	SHEET No.	TOTAL SHEETS
08	SBd	247	1.8/9.6	176	196

Randell D. Hiatt
REGISTERED CIVIL ENGINEER

July 19, 2013
PLANS APPROVAL DATE

REGISTERED PROFESSIONAL ENGINEER
Randell D. Hiatt
No. C50200
Exp. 6-30-15
CIVIL
STATE OF CALIFORNIA

THE STATE OF CALIFORNIA OR ITS OFFICERS OR AGENTS SHALL NOT BE RESPONSIBLE FOR THE ACCURACY OR COMPLETENESS OF SCANNED COPIES OF THIS PLAN SHEET.

TO ACCOMPANY PLANS DATED 12-16-13

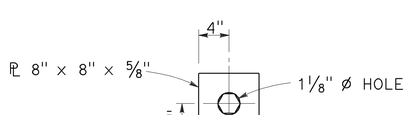

DETAIL "A"
CABLE CONNECTION
END PLATE

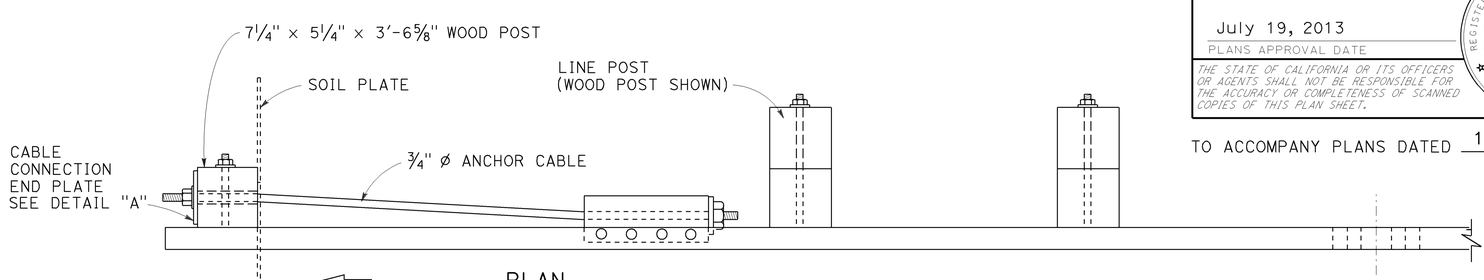

PLAN

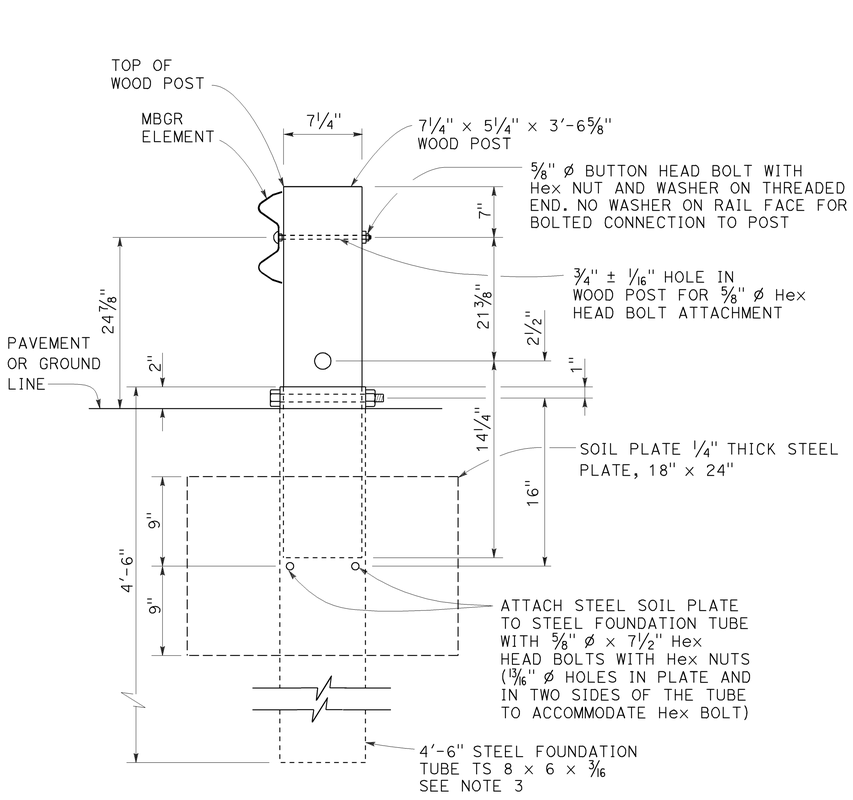

SECTION A-A

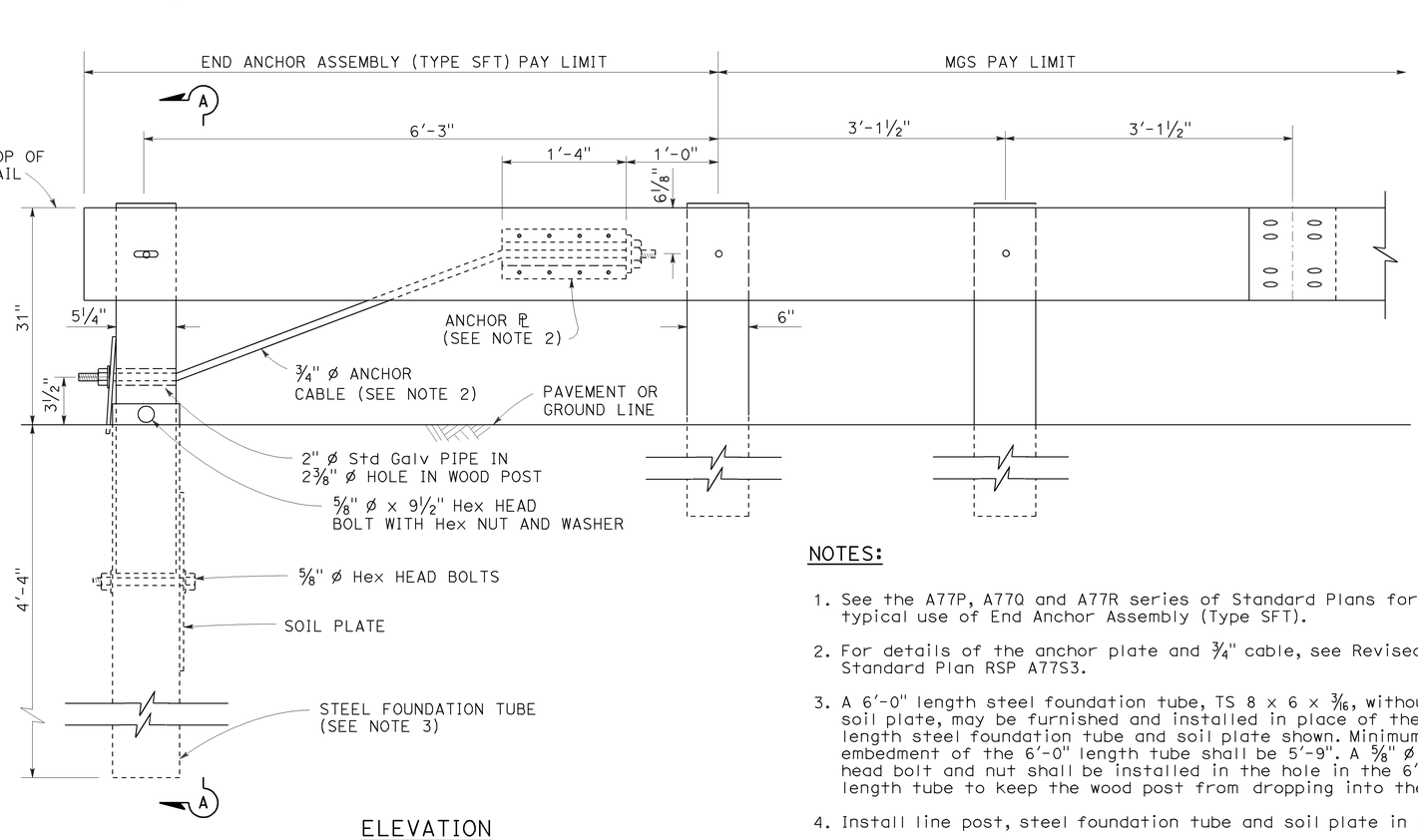

ELEVATION

END ANCHOR
ASSEMBLY (TYPE SFT)
See Note 1

NOTES:

1. See the A77P, A77Q and A77R series of Standard Plans for typical use of End Anchor Assembly (Type SFT).
2. For details of the anchor plate and 3/4" cable, see Revised Standard Plan RSP A77S3.
3. A 6'-0" length steel foundation tube, TS 8 x 6 x 3/16, without a soil plate, may be furnished and installed in place of the 4'-6" length steel foundation tube and soil plate shown. Minimum embedment of the 6'-0" length tube shall be 5'-9". A 5/8" ø Hex head bolt and nut shall be installed in the hole in the 6'-0" length tube to keep the wood post from dropping into the tube.
4. Install line post, steel foundation tube and soil plate in soil.

STATE OF CALIFORNIA
DEPARTMENT OF TRANSPORTATION

MIDWEST GUARDRAIL SYSTEM
END ANCHOR ASSEMBLY
(TYPE SFT)

NO SCALE

RSP A77S1 DATED JULY 19, 2013 SUPPLEMENTS THE STANDARD PLANS BOOK DATED 2010.

REVISED STANDARD PLAN RSP A77S1

2010 REVISED STANDARD PLAN RSP A77S1

7-3-13

Dist	COUNTY	ROUTE	POST MILES TOTAL PROJECT	SHEET No.	TOTAL SHEETS
08	SBd	247	1.8/9.6	177	196

Randell D. Hiatt
REGISTERED CIVIL ENGINEER

July 19, 2013
PLANS APPROVAL DATE

REGISTERED PROFESSIONAL ENGINEER
Randell D. Hiatt
No. C50200
Exp. 6-30-15
CIVIL
STATE OF CALIFORNIA

THE STATE OF CALIFORNIA OR ITS OFFICERS OR AGENTS SHALL NOT BE RESPONSIBLE FOR THE ACCURACY OR COMPLETENESS OF SCANNED COPIES OF THIS PLAN SHEET.

TO ACCOMPANY PLANS DATED 12-16-13

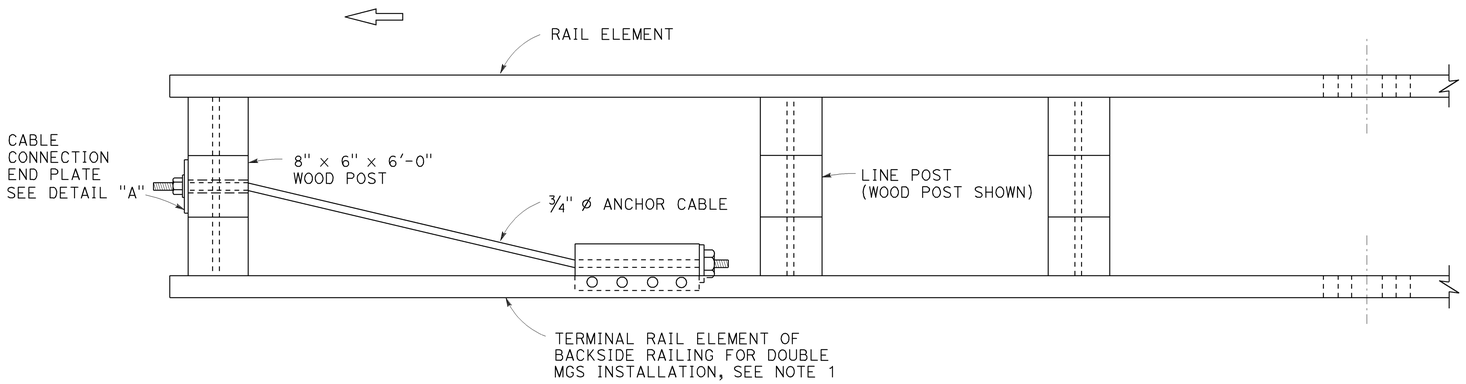

PLAN

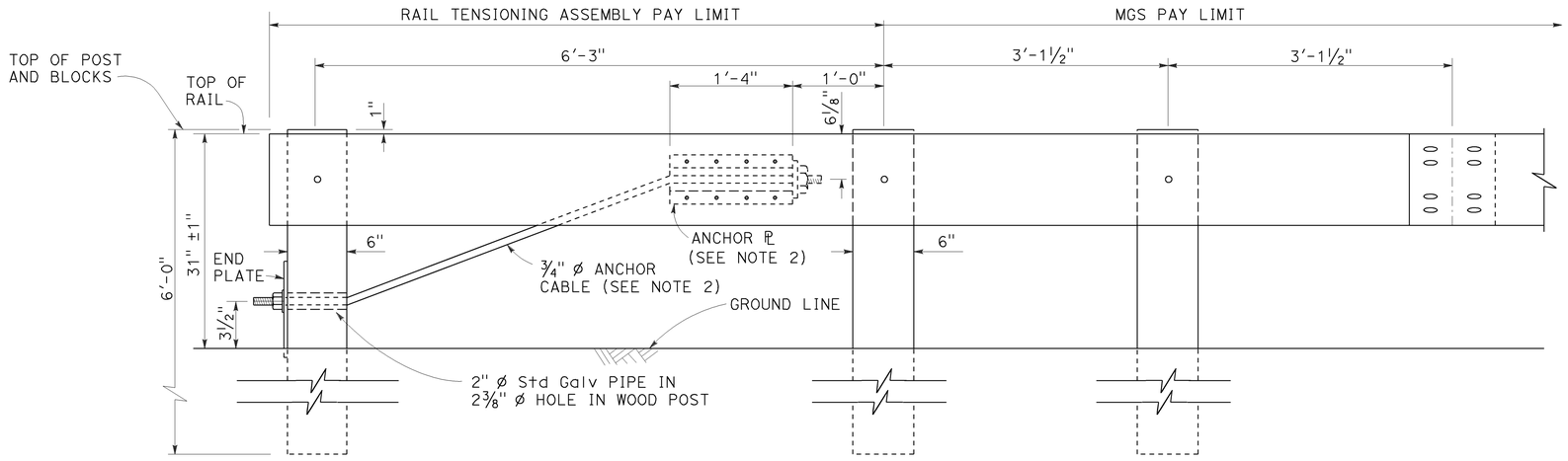

ELEVATION
RAIL TENSIONING ASSEMBLY
See Note 1

NOTES:

1. See Revised Standard Plans RSP A77Q3 and RSP A77R1 for typical use of rail tensioning assembly.
2. For details of the anchor plate and ¾" cable, see Revised Standard Plan RSP A77S3.

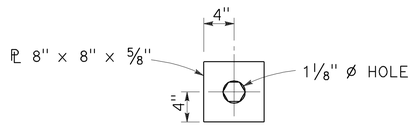

DETAIL "A"
CABLE CONNECTION END PLATE

STATE OF CALIFORNIA
DEPARTMENT OF TRANSPORTATION

MIDWEST GUARDRAIL SYSTEM
RAIL TENSIONING ASSEMBLY

NO SCALE

RSP A77S2 DATED JULY 19, 2013 SUPPLEMENTS THE STANDARD PLANS BOOK DATED 2010.

REVISED STANDARD PLAN RSP A77S2

2010 REVISED STANDARD PLAN RSP A77S2

7-3-13

Dist	COUNTY	ROUTE	POST MILES TOTAL PROJECT	SHEET No.	TOTAL SHEETS
08	SBd	247	1.8/9.6	178	196

Randell D. Hiatt
REGISTERED CIVIL ENGINEER

July 19, 2013
PLANS APPROVAL DATE

REGISTERED PROFESSIONAL ENGINEER — Randell D. Hiatt — No. C50200 — Exp. 6-30-15 — CIVIL — STATE OF CALIFORNIA

THE STATE OF CALIFORNIA OR ITS OFFICERS OR AGENTS SHALL NOT BE RESPONSIBLE FOR THE ACCURACY OR COMPLETENESS OF SCANNED COPIES OF THIS PLAN SHEET.

TO ACCOMPANY PLANS DATED 12-16-13

NOTE:

See Revised Standard Plans RSP A77S1, RSP A77S2 and RSP A77T1 for typical use of anchor cable and anchor plate.

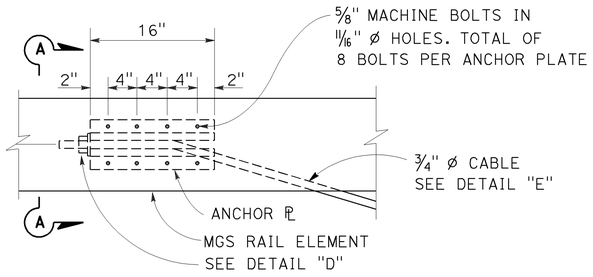

ANCHOR PLATE DETAIL

(MGS shown, TBB similar)

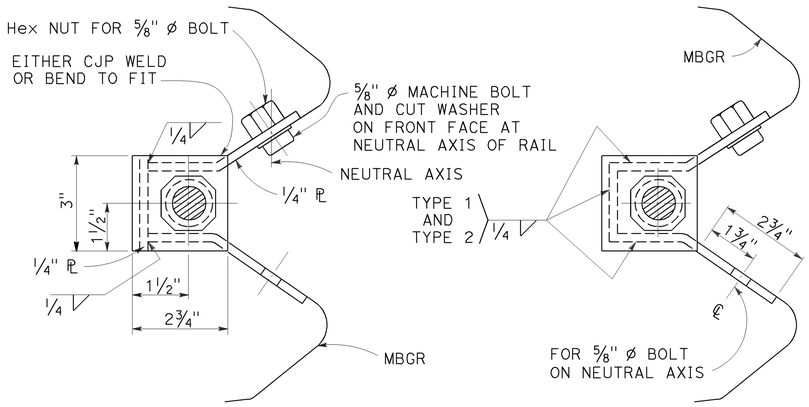

NOTE:

Dimensioning applies to both types.

SECTION A-A
(ALTERNATIVE TYPE 1)

SECTION A-A
(ALTERNATIVE TYPE 2)

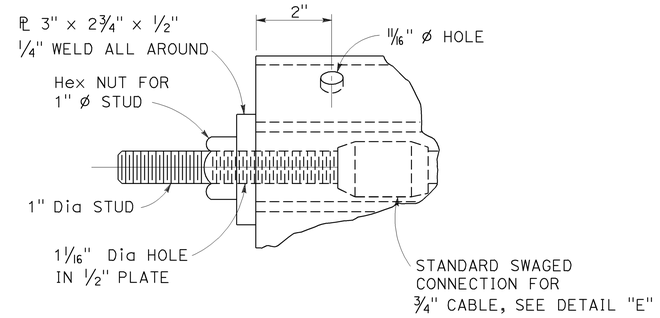

DETAIL "D"

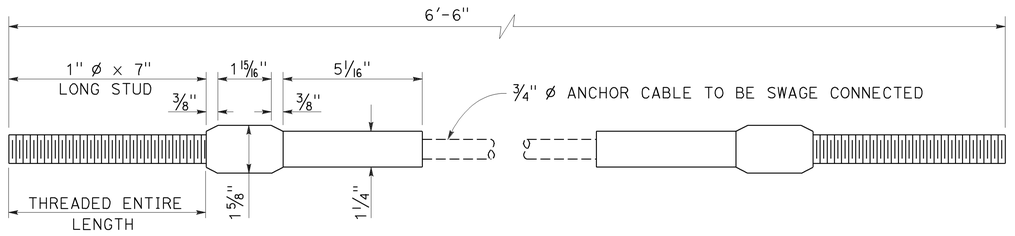

ANCHOR CABLE WITH SWAGED FITTING AND STUD

DETAIL "E"

STATE OF CALIFORNIA
DEPARTMENT OF TRANSPORTATION

METAL RAILING ANCHOR CABLE AND ANCHOR PLATE DETAILS

NO SCALE

RSP A77S3 DATED JULY 19, 2013 SUPPLEMENTS THE STANDARD PLANS BOOK DATED 2010.

REVISED STANDARD PLAN RSP A77S3

2010 REVISED STANDARD PLAN RSP A77S3

7-3-13

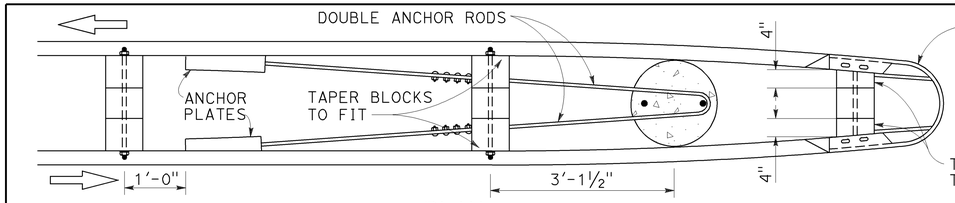

PLAN

See Note 4

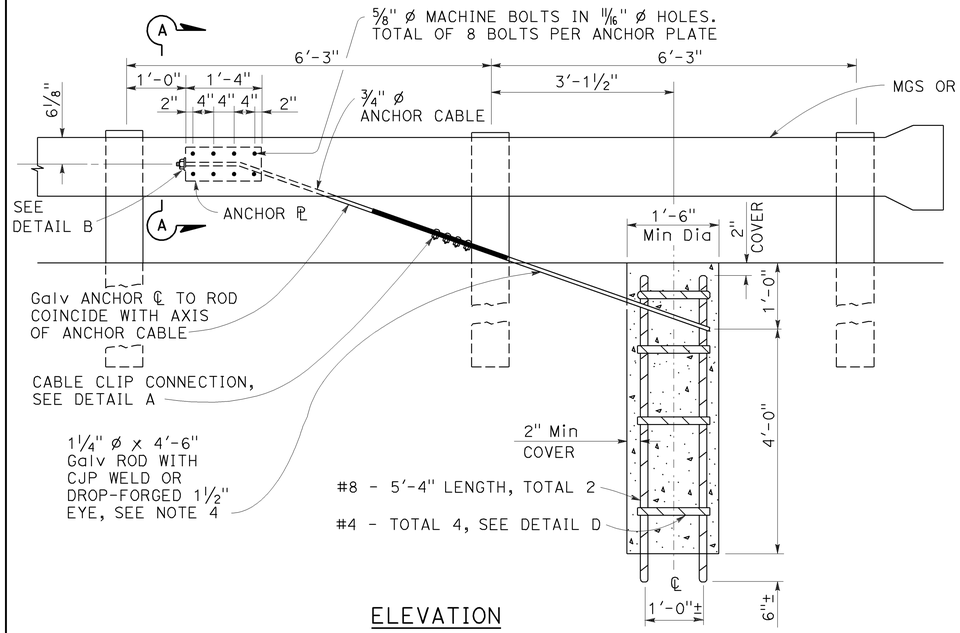

ELEVATION

END ANCHOR ASSEMBLY

(TYPE CA)

(Wood post, MGS shown, details similar for Thrie Beam Barrier.)

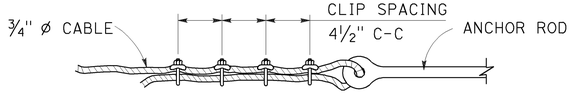

"U" bolts of clip on short end of cable only
"U" bolts tightened to 50 ft/lb torque

DETAIL A

CABLE CLIP CONNECTION

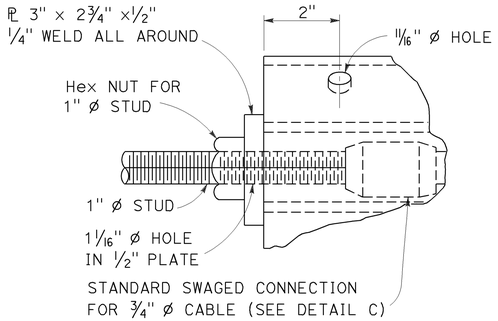

DETAIL B

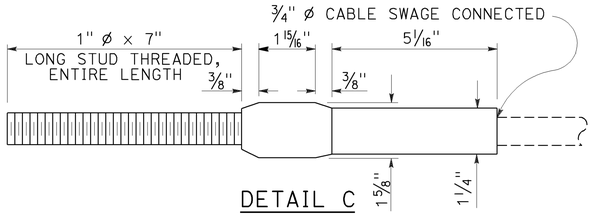

DETAIL C

ANCHOR CABLE WITH SWAGED FITTING AND STUD

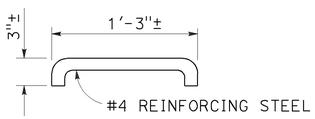

DETAIL D

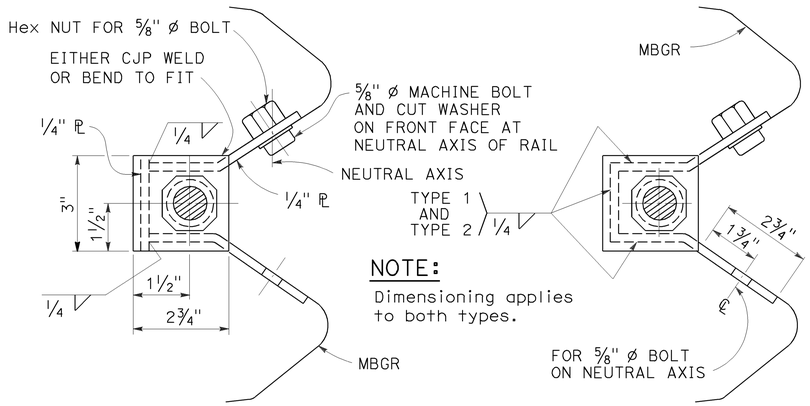

NOTE:

Dimensioning applies to both types.

SECTION A-A

(Alternative Type 1)

SECTION A-A

(Alternative Type 2)

ANCHOR PLATE DETAILS

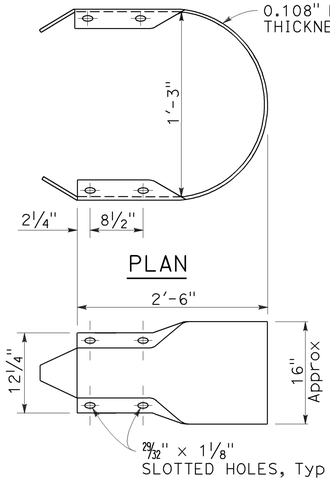

PLAN

ELEVATION

RETURN CAP

(TYPE A)

Dist	COUNTY	ROUTE	POST MILES TOTAL PROJECT	SHEET No.	TOTAL SHEETS
08	SBd	247	1.8/9.6	179	196

Randell D. Hiatt
REGISTERED CIVIL ENGINEER

July 19, 2013
PLANS APPROVAL DATE

REGISTERED PROFESSIONAL ENGINEER
Randell D. Hiatt
No. C50200
Exp. 6-30-15
CIVIL
STATE OF CALIFORNIA

THE STATE OF CALIFORNIA OR ITS OFFICERS OR AGENTS SHALL NOT BE RESPONSIBLE FOR THE ACCURACY OR COMPLETENESS OF SCANNED COPIES OF THIS PLAN SHEET.

TO ACCOMPANY PLANS DATED _____

NOTES:

1. For typical use of this type of end anchor, see Revised Standard Plan RSP A78P2.
2. Anchor cable to be parallel to railing for straight runs of rail. Anchor cable may have angle point at anchor plate if railing is curved.
3. Anchor rod hooks to be in contact with anchor reinforcement when concrete is placed. Wire ties may be used to position anchor rods.
4. Single sided railing installations require only one anchor plate, anchor rod and anchor cable. Single sided railing will not have a rail element or blockouts on backside of line posts as shown in the plan view.

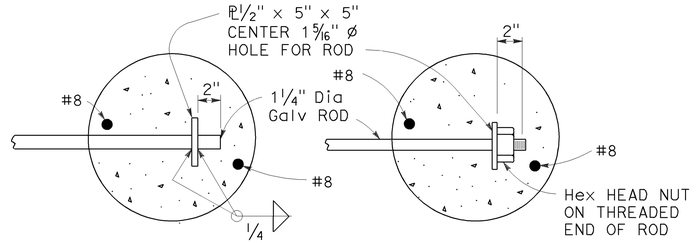

OPTIONAL ENDS ON SINGLE ANCHOR ROD

(Not to be used for double anchors)

NOTE:

Use two 1¼" Ø Galv rods with hook and eye for double MGS anchor.

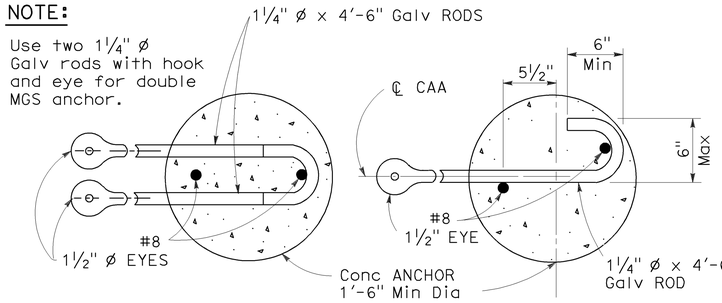

DOUBLE ANCHOR SINGLE ANCHOR

ANCHOR RODS

STATE OF CALIFORNIA
DEPARTMENT OF TRANSPORTATION

METAL RAILING END ANCHOR ASSEMBLY (TYPE CA)

NO SCALE

RSP A77T1 DATED JULY 19, 2013 SUPPLEMENTS THE STANDARD PLANS BOOK DATED 2010.

REVISED STANDARD PLAN RSP A77T1

2010 REVISED STANDARD PLAN RSP A77T1

6-11-13

Dist	COUNTY	ROUTE	POST MILES TOTAL PROJECT	SHEET No.	TOTAL SHEETS
08	SBd	247	1.8/9.6	180	196

Randell D. Hiatt
REGISTERED CIVIL ENGINEER

July 19, 2013
PLANS APPROVAL DATE

REGISTERED PROFESSIONAL ENGINEER
Randell D. Hiatt
No. C50200
Exp. 6-30-15
CIVIL
STATE OF CALIFORNIA

THE STATE OF CALIFORNIA OR ITS OFFICERS OR AGENTS SHALL NOT BE RESPONSIBLE FOR THE ACCURACY OR COMPLETENESS OF SCANNED COPIES OF THIS PLAN SHEET.

TO ACCOMPANY PLANS DATED 12-16-13

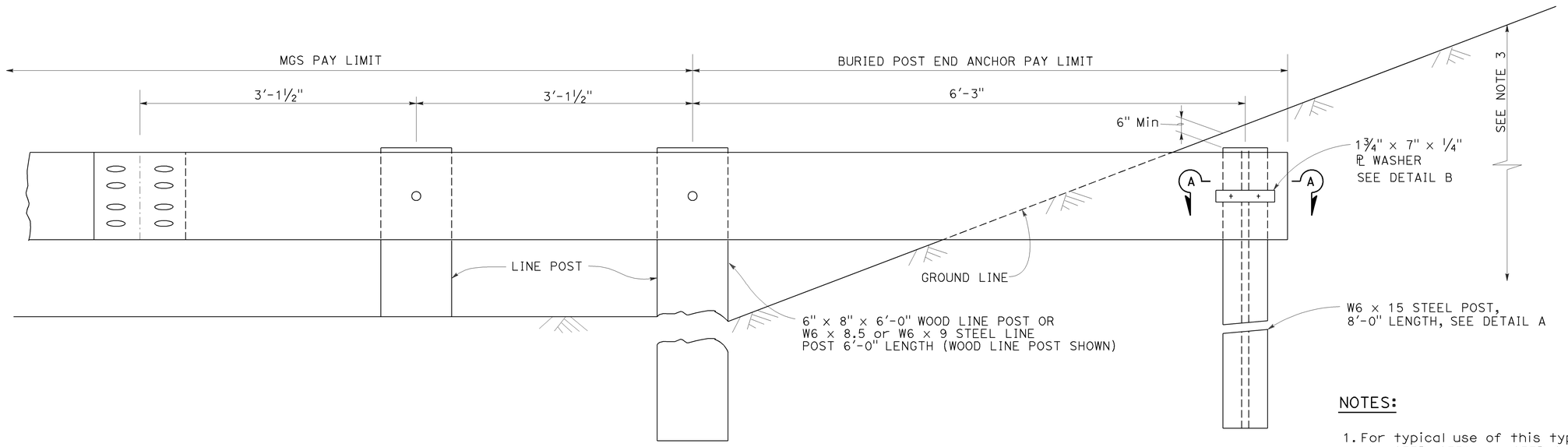

BURIED POST END ANCHOR

See Note 3

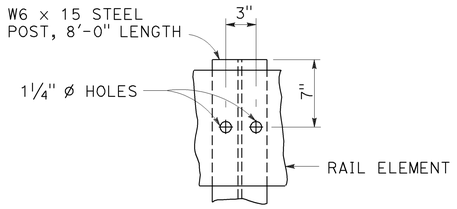

DETAIL A

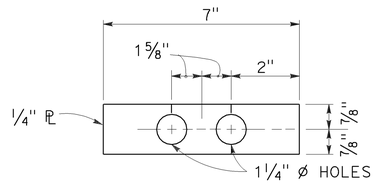

DETAIL B

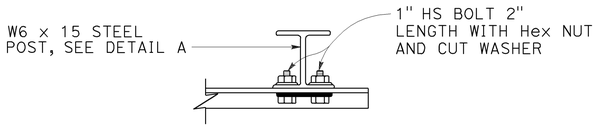

SECTION A-A

NOTES:

1. For typical use of this type of end anchor with MGS see the A77P, A77Q and A77R Series of the Standard Plans.
2. Holes excavation in the slope to construct the buried post end anchor shall be backfilled with selected earth, placed in layers approximately 1'-0" thick. Each layer shall be moistened and thoroughly compacted.
3. The buried post end anchor shall only be constructed at those locations where the slope perpendicular to the roadway is non-traversable.

STATE OF CALIFORNIA
DEPARTMENT OF TRANSPORTATION

MIDWEST GUARDRAIL SYSTEM
BURIED POST END ANCHOR

NO SCALE

RSP A77T2 DATED JULY 19, 2013 SUPPLEMENTS THE STANDARD PLANS BOOK DATED 2010.

REVISED STANDARD PLAN RSP A77T2

LEGEND:

AB	ABANDON. IF APPLIED TO CONDUIT, REMOVE CONDUCTORS
BC	INSTALL PULL BOX IN EXISTING CONDUIT RUN
BP	PEDESTRIAN BARRICADE, TYPE AS INDICATED ON PLAN
CB	INSTALL CONDUIT INTO EXISTING PULL BOX
CC	CONNECT NEW AND EXISTING CONDUIT. REMOVE EXISTING CONDUCTORS AND INSTALL CONDUCTORS AS INDICATED
CF	CONDUIT TO REMAIN FOR FUTURE USE. REMOVE CONDUCTORS. INSTALL PULL TAPE
DH	DETECTOR HANDHOLE
FA	FOUNDATION TO BE ABANDONED
IS	INSTALL SIGN ON SIGNAL MAST ARM
NS	NO SLIP BASE ON STANDARD
PEC	PHOTOELECTRIC CONTROL
PEU	PHOTOELECTRIC UNIT
RC	EQUIPMENT OR MATERIAL TO BE REMOVED AND BECOME THE PROPERTY OF THE CONTRACTOR
RE	REMOVE ELECTROLIER, FUSES AND BALLAST. TAPE ENDS OF CONDUCTORS
RL	RELOCATE EQUIPMENT
RR	REMOVE AND REUSE EQUIPMENT
RS	REMOVE AND SALVAGE EQUIPMENT
SC	SPLICE NEW TO EXISTING CONDUCTORS
SD	SERVICE DISCONNECT
TSP	TELEPHONE SERVICE POINT

ABBREVIATIONS

APS	ACCESSIBLE PEDESTRIAN SIGNAL
BBS	BATTERY BACKUP SYSTEM
BC	BOLT CIRCLE
BPB	BICYCLE PUSH BUTTON
C	CONDUIT
CB	CIRCUIT BREAKER
CCTV	CLOSED CIRCUIT TELEVISION
Ckt	CIRCUIT
CMS	CHANGEABLE MESSAGE SIGN
Ctid	CALTRANS IDENTIFICATION
Comm	COMMUNICATION
DLC	LOOP DETECTOR LEAD-IN CABLE
EMS	EXTINGUISHABLE MESSAGE SIGN
EVUC	EMERGENCY VEHICLE UNIT CABLE
EVUD	EMERGENCY VEHICLE UNIT DETECTOR
FB	FLASHING BEACON
FBCA	FLASHING BEACON CONTROL ASSEMBLY
FBS	FLASHING BEACON WITH SLIP BASE
FO	FIBER OPTIC
G	EQUIPMENT GROUNDING CONDUCTOR
GB	GROUND BUS
GFCI	GROUND FAULT CIRCUIT INTERRUPTER
HAR	HIGHWAY ADVISORY RADIO
Hex	HEXAGONAL
HPS	HIGH PRESSURE SODIUM
IISNS	INTERNALLY ILLUMINATED STREET NAME SIGN
ISL	INDUCTION SIGN LIGHTING
LED	LIGHT EMITTING DIODE
LMA	LUMINAIRE MAST ARM
LPS	LOW PRESSURE SODIUM
Ltg	LIGHTING
Lum	LUMINAIRE
M	METERED
MAT	MAST ARM MOUNTING TOP ATTACHMENT
MAS	MAST ARM MOUNTING SIDE ATTACHMENT
M/M	MULTIPLE TO MULTIPLE TRANSFORMER
Mtg	MOUNTING
MV	MERCURY VAPOR LIGHTING FIXTURE
MVDS	MICROWAVE VEHICLE DETECTION SYSTEM
N	NEUTRAL (GROUNDED CONDUCTOR)
NB	NEUTRAL BUS
NC	NORMALLY CLOSE
NO	NORMALLY OPEN
P	CIRCUIT BREAKER'S POLE
PB	PULL BOX
PBA	PUSH BUTTON ASSEMBLY
PEC	PHOTOELECTRIC CONTROL
Ped	PEDESTRIAN
PEU	PHOTOELECTRIC UNIT
PT	CONDUIT WITH PULL TAPE
RE	RELOCATED EQUIPMENT
RM	RAMP METERING
RWIS	ROADSIDE WEATHER INFORMATION SYSTEM
SB	SLIP BASE
SIC	SIGNAL INTERCONNECT CABLE
Sig	SIGNAL
SMA	SIGNAL MAST ARM
SNS	STREET NAME SIGN
SP	SERVICE POINT
TDC	TELEPHONE DEMARCATION CABINET
TMS	TRAFFIC MONITORING STATION
TOS	TRAFFIC OPERATIONS SYSTEM
Veh	VEHICLE
VIVDS	VIDEO IMAGE VEHICLE DETECTION SYSTEM
WIM	WEIGH-IN-MOTION
Xfmr	TRANSFORMER

Dist	COUNTY	ROUTE	POST MILES TOTAL PROJECT	SHEET No.	TOTAL SHEETS
08	SBd	247	1.8/9.6	181	196

Theresa Gabriel
REGISTERED ELECTRICAL ENGINEER

Theresa Aziz Gabriel No. E15129 Exp. 6-30-14 ELECTRICAL — REGISTERED PROFESSIONAL ENGINEER — STATE OF CALIFORNIA

July 19, 2013
PLANS APPROVAL DATE

THE STATE OF CALIFORNIA OR ITS OFFICERS OR AGENTS SHALL NOT BE RESPONSIBLE FOR THE ACCURACY OR COMPLETENESS OF SCANNED COPIES OF THIS PLAN SHEET.

TO ACCOMPANY PLANS DATED 12-16-13

SOFFIT AND WALL MOUNTED LUMINAIRES

- PENDANT, 70 W HPS UNLESS OTHERWISE SPECIFIED
- FLUSH, 70 W HPS UNLESS OTHERWISE SPECIFIED
- WALL SURFACE, 70 W HPS UNLESS OTHERWISE SPECIFIED
- EXISTING SOFFIT OR WALL LUMINAIRE TO REMAIN UNMODIFIED
- (M) EXISTING SOFFIT OR WALL LUMINAIRE TO BE MODIFIED AS SPECIFIED

NOTE:
Arrow indicates "street side" of luminaire.

COMMONLY USED SYMBOLS FOR UNITED STATES CUSTOMARY UNITS OF MEASUREMENT:

SYMBOL USED	DEFINITIONS
Ω	OHMS
min	MINUTE
s	SECOND
bps	BITS PER SECOND
Bps	BYTES PER SECOND
A	AMPERE
V	VOLT
V(dc)	VOLT (DIRECT CURRENT)
V(ac)	VOLT (ALTERNATING CURRENT)
FC	FOOT - CANDLE
W	WATTS
VA	VOLT-AMPERE
M	MEGA
k	KILO
m	MILLI
μ	MICRO
P	PICO
Hz	HERTZ

MISCELLANEOUS ELECTROLIERS

NEW	EXISTING	
		LUMINAIRE ON WOOD POLE
		NON-STANDARD ELECTROLIER (SEE PROJECT NOTES OR PROJECT PLANS)
		CITY ELECTROLIER
		ELECTROLIER FOUNDATION (FUTURE INSTALLATION)

NOTES:

1. HPS luminaires shall be 310 W HPS when installed on Type 21, 21D, 30, 31 and 32 Standards, unless otherwise specified. HPS luminaires shall be 200 W when installed on other type standards or poles, unless otherwise specified.
2. LED luminaires shall be 235 W when installed on Type 21, 21D, 30, 31 and 32 Standards, unless otherwise specified. LED luminaires shall be 165 W when installed on other type standards or poles, unless otherwise specified.
3. Luminaires shall be the cutoff type, ANSI Type III medium cutoff lighting distribution, unless otherwise specified.

STANDARD ELECTROLIER

NEW	EXISTING	STANDARD TYPE
		15
		15D
		15 STRUCTURE
		15D STRUCTURE
		21
		21D
		21 STRUCTURE
		21D STRUCTURE
		30
		31
		32

STATE OF CALIFORNIA
DEPARTMENT OF TRANSPORTATION

ELECTRICAL SYSTEMS (LEGEND AND ABBREVIATIONS)

NO SCALE

RSP ES-1A DATED JULY 19, 2013 SUPERSEDES STANDARD PLAN ES-1A DATED MAY 20, 2011 - PAGE 425 OF THE STANDARD PLANS BOOK DATED 2010.

REVISED STANDARD PLAN RSP ES-1A

2010 REVISED STANDARD PLAN RSP ES-1A

7-15-13

Dist	COUNTY	ROUTE	POST MILES TOTAL PROJECT	SHEET No.	TOTAL SHEETS
08	SBd	247	1.8/9.6	182	196

Theresa Gabriel
REGISTERED ELECTRICAL ENGINEER

Theresa Aziz Gabriel No. E15129 Exp. 6-30-14 ELECTRICAL — REGISTERED PROFESSIONAL ENGINEER — STATE OF CALIFORNIA

July 19, 2013
PLANS APPROVAL DATE

THE STATE OF CALIFORNIA OR ITS OFFICERS OR AGENTS SHALL NOT BE RESPONSIBLE FOR THE ACCURACY OR COMPLETENESS OF SCANNED COPIES OF THIS PLAN SHEET.

TO ACCOMPANY PLANS DATED 12-16-13

CONDUIT

NEW	EXISTING	
		LIGHTING CONDUIT, UNLESS OTHERWISE INDICATED OR NOTED
		TRAFFIC SIGNAL CONDUIT
C	c	COMMUNICATION CONDUIT
T	t	TELEPHONE CONDUIT
F	f	FIRE ALARM CONDUIT
FO	fo	FIBER OPTIC CONDUIT
		CONDUIT TERMINATION
R	r	CONDUIT RISER ATTACHED TO THE STRUCTURE OR SERVICE POLE

SERVICE EQUIPMENT

NEW	EXISTING	
OH	oh	OVERHEAD LINES
U	U	WOOD POLE, "U" INDICATES UTILITY OWNED
		POLE GUY WITH ANCHOR
		UTILITY TRANSFORMER - GROUND MOUNTED
III	III	SERVICE EQUIPMENT ENCLOSURE TYPE. DOOR INDICATES FRONT OF ENCLOSURE
T	t	TELEPHONE DEMARCATION CABINET

POLE-MOUNTED SERVICE DESIGNATION

TYPE H SERVICE, 28'-10" — TYPE OF INSTALLATION AND POLE HEIGHT ABOVE GRADE

FLASHING BEACON

NEW	EXISTING	
R	R	FLASHING BEACON (ONE VEHICLE SIGNAL HEAD WITH BACKPLATE AND VISOR) "R" INDICATES RED INDICATION, "Y" INDICATES YELLOW INDICATION
Y Y	Y Y	FLASHING BEACON WITH TYPE 15-FBS STANDARD AND A SIGN.
R R	R R	FLASHING BEACON WITH TYPES 9, 9A OR 9B SIGN UNLESS OTHERWISE SPECIFIED OR INDICATED

SIGNAL EQUIPMENT

NEW	EXISTING	
C	C	PEDESTRIAN SIGNAL HEAD "C" INDICATES COUNTDOWN PEDESTRIAN HEAD
		PUSH BUTTON ASSEMBLY POST
		PEDESTRIAN BARRICADE
		VEHICLE SIGNAL HEAD (WITH BACKPLATE AND 3-SECTIONS: RED, YELLOW AND GREEN)
		VEHICLE SIGNAL HEAD WITH ANGLE VISOR
PV	PV	MODIFICATIONS OF BASIC SYMBOL: "L" INDICATES ALL NON-ARROW SECTIONS LOUVERED "LG" INDICATES LOUVERED GREEN SECTION ONLY "PV" INDICATES ALL 12" SECTIONS PROGRAMMED VISIBILITY "8" INDICATES ALL 8" SECTIONS (ONLY WHEN SPECIFIED)
		VEHICLE SIGNAL HEAD CONSISTING OF RED, YELLOW AND GREEN LEFT ARROW SECTIONS
		VEHICLE SIGNAL HEAD CONSISTING OF RED AND YELLOW SECTIONS WITH AN UP GREEN ARROW SECTION
		VEHICLE SIGNAL HEAD (5 SECTION) CONSISTING OF RED, YELLOW AND GREEN SECTIONS WITH YELLOW AND GREEN RIGHT ARROW SECTIONS
		TYPE 15TS STANDARD WITH VEHICLE SIGNAL HEAD AND LUMINAIRE
		TYPE 21TS STANDARD WITH VEHICLE SIGNAL HEAD AND LUMINAIRE
		STANDARD WITH LUMINAIRE AND SIGNAL MAST ARMS AND ATTACHED VEHICLE SIGNAL HEADS
		TYPE 1 STANDARD WITH ATTACHED VEHICLE SIGNAL HEADS
		STANDARD WITH A SIGNAL MAST ARM, ATTACHED VEHICLE SIGNAL HEADS AND INTERNALLY ILLUMINATED STREET NAME SIGN
		CONTROLLER ASSEMBLY. DOOR INDICATES FRONT OF CABINET

SIGNAL EQUIPMENT Cont

NEW	EXISTING	
		GUARD POST
		TYPE 1 STANDARD WITH RAMP METERING SIGN
		OPTICAL DETECTOR FOR THE EMERGENCY VEHICLE DETECTION SYSTEM

NOTES:

1. All signal sections shall be 12" unless shown otherwise.
2. Signal heads shall be provided with backplates unless shown otherwise.

ILLUMINATED OVERHEAD SIGN

NEW	EXISTING	
		SINGLE POST, SINGLE ILLUMINATED SIGN, BALANCED BUTTERFLY
		SINGLE POST, DOUBLE ILLUMINATED SIGN, BALANCED BUTTERFLY
		SINGLE POST, SINGLE ILLUMINATED SIGN, FULL CANTILEVER
		DOUBLE POST, SINGLE ILLUMINATED SIGN
		SINGLE ILLUMINATED SIGN MOUNTED ON STRUCTURE
		DOUBLE POST, SINGLE ILLUMINATED SIGN WITH ELECTROLIER

STATE OF CALIFORNIA
DEPARTMENT OF TRANSPORTATION

ELECTRICAL SYSTEMS (LEGEND AND ABBREVIATIONS)

NO SCALE

RSP ES-1B DATED JULY 19, 2013 SUPERSEDES STANDARD PLAN ES-1B DATED MAY 20, 2011 - PAGE 426 OF THE STANDARD PLANS BOOK DATED 2010.

REVISED STANDARD PLAN RSP ES-1B

2010 REVISED STANDARD PLAN RSP ES-1B

7-15-13

Dist	COUNTY	ROUTE	POST MILES TOTAL PROJECT	SHEET No.	TOTAL SHEETS
08	SBd	247	1.8/9.6	183	196

Theresa Gabriel
REGISTERED ELECTRICAL ENGINEER

July 19, 2013
PLANS APPROVAL DATE

Theresa Aziz Gabriel No. E15129 Exp. 6-30-14 ELECTRICAL — REGISTERED PROFESSIONAL ENGINEER — STATE OF CALIFORNIA

THE STATE OF CALIFORNIA OR ITS OFFICERS OR AGENTS SHALL NOT BE RESPONSIBLE FOR THE ACCURACY OR COMPLETENESS OF SCANNED COPIES OF THIS PLAN SHEET.

TO ACCOMPANY PLANS DATED 12-16-13

EQUIPMENT IDENTIFICATION

ILLUMINATED SIGN IDENTIFICATION NUMBER:

SIGN No. 12345
10 ISL SCI 1.0

- SIGN NUMBER - PLACE ON POST OR STRUCTURE
- TRANSFORMER RATING (kVA)
- LIGHTING CONTROL TYPE
- NUMBER AND TYPE OF FIXTURES

DO NOT PLACE ON STANDARD OR STRUCTURE

ELECTROLIER OR EQUIPMENT IDENTIFICATION NUMBER:

12345 - 15'-0"

- MAST ARM LENGTH, IF SHOWN. DO NOT PLACE ON STANDARD OR STRUCTURE
- EQUIPMENT NUMBER - PLACE ON STANDARD OR STRUCTURE. EXISTING EQUIPMENT NUMBERS ARE SHOWN IN PARENTHESIS

CONDUIT AND CONDUCTOR IDENTIFICATION:

1½"C, 2#10, 15#14, 2 DLC, 12P#18 (PAIR)

- NUMBER AND SIZE OF CONDUCTORS AND CABLES
- SIZE OF CONDUIT IN INCHES
- ø1, ø2, ø2P, etc. — TRAFFIC PHASE IDENTIFICATION FOR SIGNAL FACES, DETECTORS AND PHASE DIAGRAMS
- 1 2 3 — LEGEND NUMBERS
- (A) (B) (C) — EQUIPMENT, SIGNAL POLES, INSTALLATION OR ITEMS
- 1 2 3 — CONDUIT RUN NUMBERS

SIGNAL AND LIGHTING STANDARD (TYPICAL DESIGNATION):

19A - 3 - 100

- WIND VELOCITY = 100 mph
- CASE 3 ARM LOADING
- STANDARD TYPE
- STANDARD PLAN SHEET NUMBER
- DETAIL, NUMBER, SECTION, TYPE OR ELEVATION

MISCELLANEOUS EQUIPMENT

NEW	EXISTING	
CMS	cms	CHANGEABLE MESSAGE SIGN
		CLOSED CIRCUIT TELEVISION CAMERA
		HIGHWAY ADVISORY RADIO POLE AND ANTENNA
EMS	ems	EXTINGUISHABLE MESSAGE SIGN
M V	m v	DETECTION DEVICE M = MICROWAVE SENSOR V = VIDEO IMAGE SENSOR

WIRING DIAGRAM LEGEND

- EXTERNAL CONDUCTOR
- CONDUCTOR OR BUS
- TIE POINT
- CONTACTOR COIL
- CONTACTOR, NO CONTACT
- TERMINAL BLOCKS
- CONTACTOR, NC CONTACT
- ENCLOSURE BOND
- GROUNDING ELECTRODE
- CIRCUIT BREAKER
- RECEPTACLE

PULL BOXES

NEW	EXISTING	
		PULL BOX, No. 5 UNLESS OTHERWISE INDICATED OR NOTED
3	9A(21)	PULL BOX, ADDITIONAL DESIGNATIONS OR DESCRIPTIONS

3 No. 3½ PULL BOX
5 No. 5 PULL BOX
6 No. 6 PULL BOX
7 No. 7 (CEILING PULL BOX)
8 No. 8 (PENDANT SOFFIT PULL BOX)
9 No. 9 PULL BOX
9A No. 9A PULL BOX

(C) COMMUNICATIONS PULL BOX
(E) PULL BOX WITH EXTENSION
(S) SPRINKLER CONTROL PULL BOX
(21) ANCHOR BOLTS AND CONDUIT FOR FUTURE INSTALLATION OF TYPE 21 STANDARD
(T) TRAFFIC PULL BOX

VEHICLE DETECTORS

5 J 9 U

- VEHICLE DETECTOR DESIGNATION
- U = UPPER, L = LOWER
- SLOT NUMBER IN INPUT FILE
- INPUT FILE (I OR J)
- PHASE

NEW	EXISTING	
		TYPE A DETECTOR LOOP. OUTLINE OF SAWCUT SHOWN
		TYPE B DETECTOR LOOP. OUTLINE OF SAWCUT SHOWN
		TYPE C DETECTOR LOOP. OUTLINE OF SAWCUT SHOWN
		TYPE D DETECTOR LOOP. OUTLINE OF SAWCUT SHOWN
		TYPE E DETECTOR LOOP. OUTLINE OF SAWCUT SHOWN
		TYPE Q DETECTOR LOOP. OUTLINE OF SAWCUT SHOWN
		MAGNETIC DETECTOR
DH	dh	DETECTOR HANDHOLE
		MICROWAVE OR VIDEO DETECTION ZONE

STATE OF CALIFORNIA
DEPARTMENT OF TRANSPORTATION

ELECTRICAL SYSTEMS (LEGEND AND ABBREVIATIONS)

NO SCALE

RSP ES-1C DATED JULY 19, 2013 SUPERSEDES STANDARD PLAN ES-1C DATED MAY 20, 2011 - PAGE 427 OF THE STANDARD PLANS BOOK DATED 2010.

REVISED STANDARD PLAN RSP ES-1C

2010 REVISED STANDARD PLAN RSP ES-1C

7-11-13

Dist	COUNTY	ROUTE	POST MILES TOTAL PROJECT	SHEET No.	TOTAL SHEETS
08	SBd	247	1.8/9.6	184	196

Theresa Gabriel
REGISTERED ELECTRICAL ENGINEER

July 19, 2013
PLANS APPROVAL DATE

REGISTERED PROFESSIONAL ENGINEER
Theresa Aziz Gabriel
No. E15129
Exp. 6-30-14
ELECTRICAL
STATE OF CALIFORNIA

THE STATE OF CALIFORNIA OR ITS OFFICERS OR AGENTS SHALL NOT BE RESPONSIBLE FOR THE ACCURACY OR COMPLETENESS OF SCANNED COPIES OF THIS PLAN SHEET.

TO ACCOMPANY PLANS DATED 12-16-13

2010 REVISED STANDARD PLAN RSP ES-4A

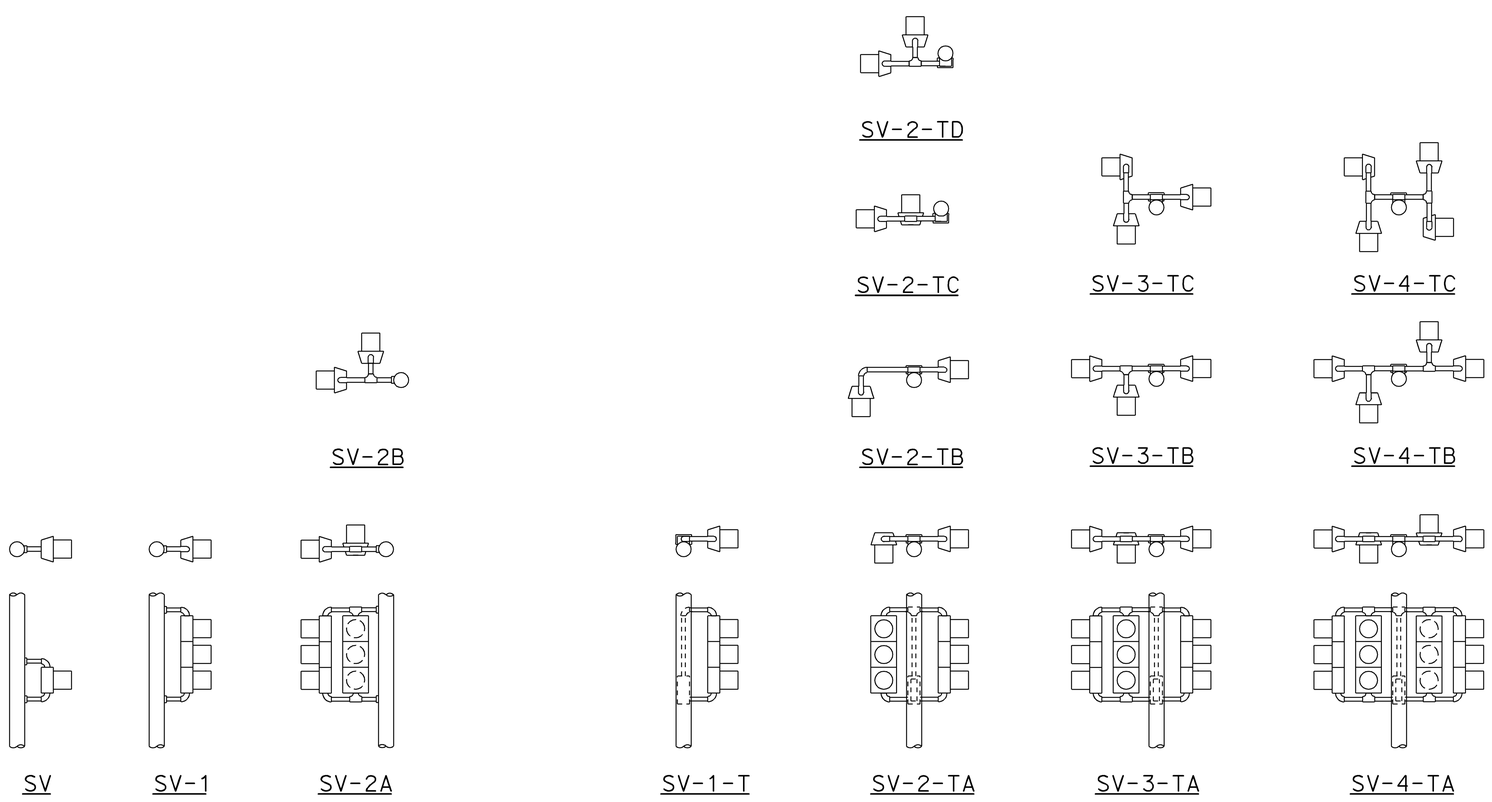

PLAN VIEW OF OTHER SIDE MOUNTINGS

SIDE MOUNTINGS

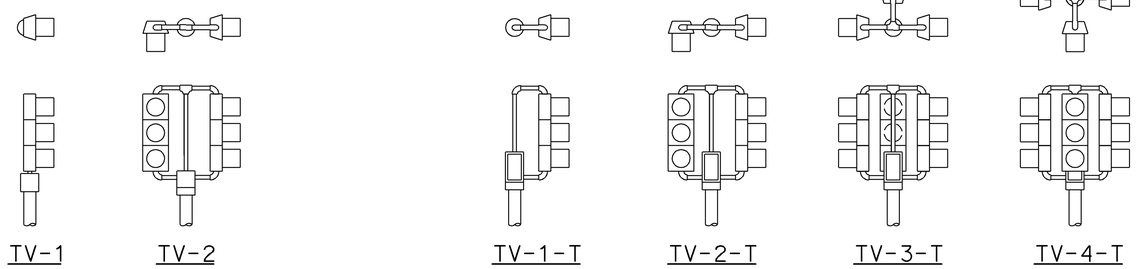

PLAN VIEW OF TOP MOUNTINGS

TOP MOUNTINGS

ABBREVIATIONS:

SV	SIDE MOUNTED VEHICLE SIGNALS
T	TERMINAL COMPARTMENT
TV	TOP MOUNTED VEHICLE SIGNALS
1, 2, 3, 4	NUMBER OF SIGNAL FACES (3 - SECTION, UNLESS OTHERWISE INDICATED)
A, B, C, D	CONFIGURATION OF SIGNALS

NOTES:

1. Mountings shall be oriented to provide maximum horizontal clearance to adjacent roadway.
2. Bracket arms shall be long enough to permit proper alignment of signals and backplate installation.
3. See Standard Plans ES-4D and ES-4E for attachment fitting details.

STATE OF CALIFORNIA
DEPARTMENT OF TRANSPORTATION

ELECTRICAL SYSTEMS (VEHICULAR SIGNAL HEADS AND MOUNTINGS)

NO SCALE

RSP ES-4A DATED JULY 19, 2013 SUPERSEDES STANDARD PLAN ES-4A DATED MAY 20, 2011 - PAGE 443 OF THE STANDARD PLANS BOOK DATED 2010.

REVISED STANDARD PLAN RSP ES-4A

7-9-13

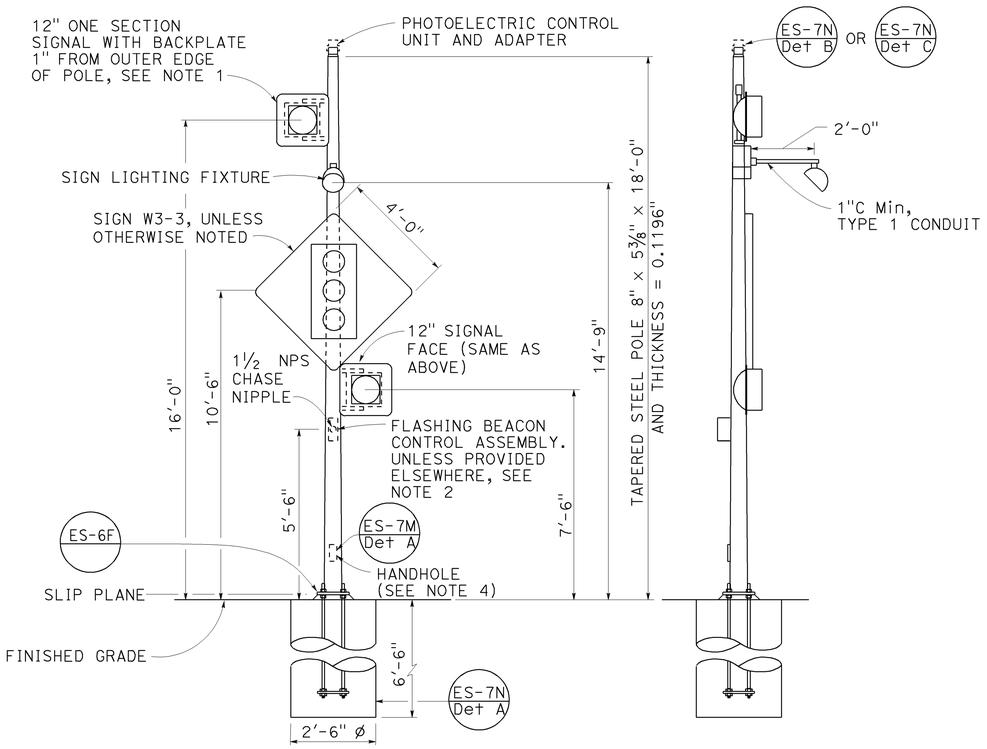

FRONT VIEW

SIDE VIEW

TYPE 15-FBS

ADVANCE FLASHING BEACON WITH SLIP BASE INSTALLATION

DETAIL A

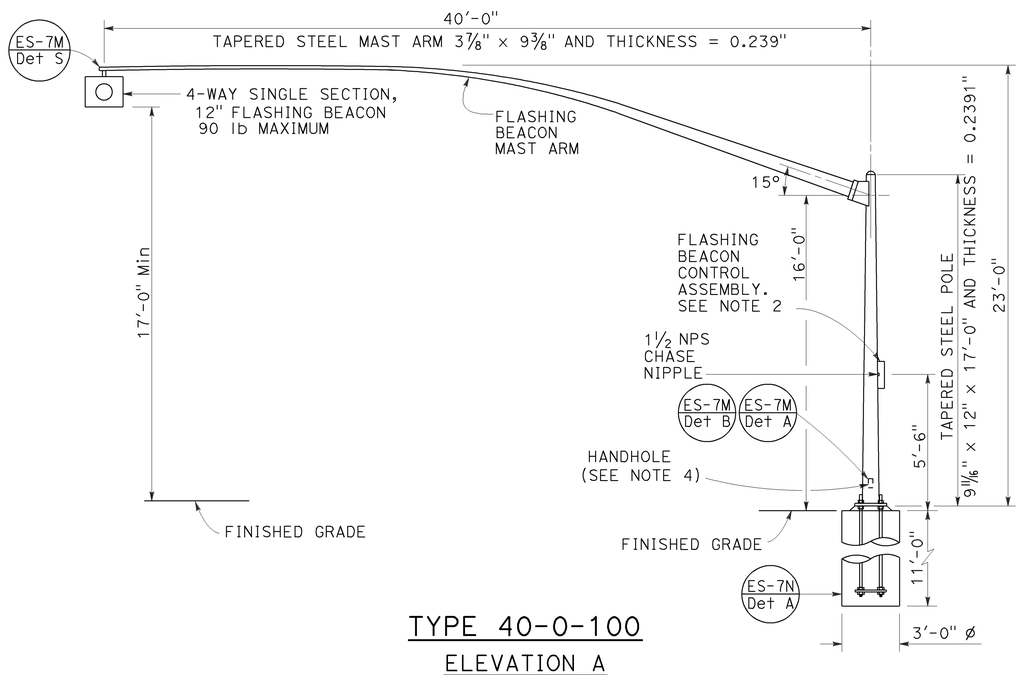

TYPE 40-0-100

ELEVATION A

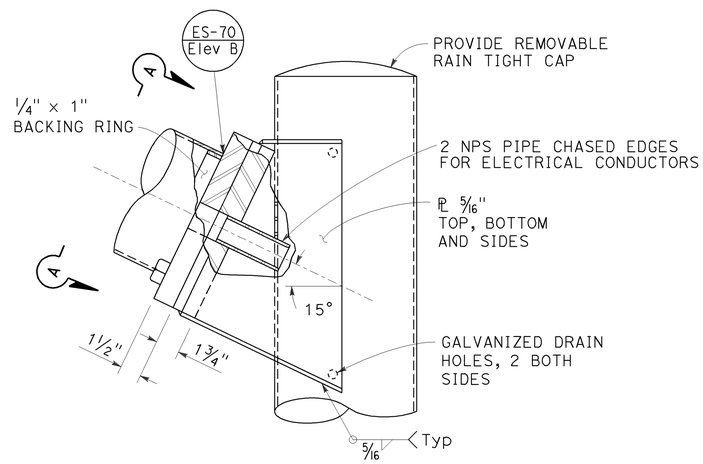

ELEVATION B

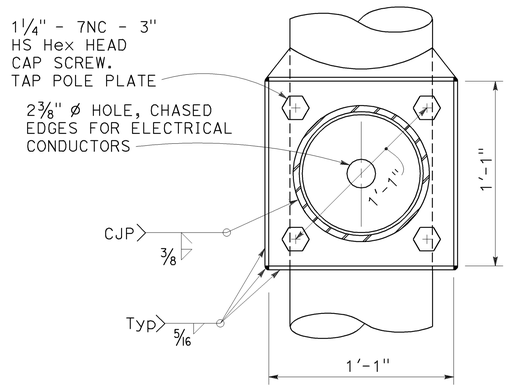

VIEW A-A

FLASHING BEACON MAST ARM CONNECTION DETAIL

DETAIL B

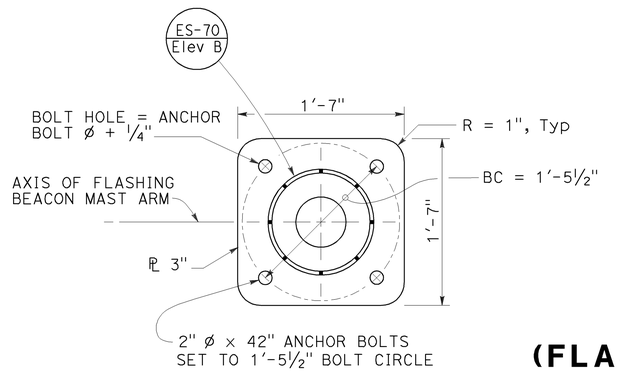

BASE PLATE

DETAIL C

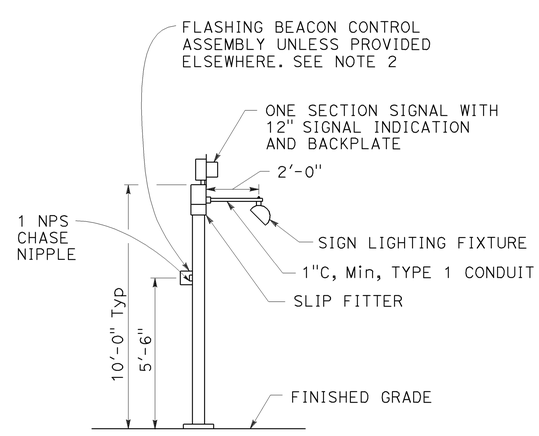

TYPE 1-A, 1-B, 1-C AND 1-D

ADVANCE FLASHING BEACON INSTALLATION

DETAIL D

See Note 5

Dist	COUNTY	ROUTE	POST MILES TOTAL PROJECT	SHEET No.	TOTAL SHEETS
08	SBd	247	1.8/9.6	185	196

REGISTERED CIVIL ENGINEER

July 19, 2013
PLANS APPROVAL DATE

REGISTERED PROFESSIONAL ENGINEER — Stanley P. Johnson — No. C57793 — Exp. 3-31-14 CIVIL — STATE OF CALIFORNIA

THE STATE OF CALIFORNIA OR ITS OFFICERS OR AGENTS SHALL NOT BE RESPONSIBLE FOR THE ACCURACY OR COMPLETENESS OF SCANNED COPIES OF THIS PLAN SHEET.

TO ACCOMPANY PLANS DATED 12-16-13

NOTES:

1. See Revised Standard Plan RSP ES-4A and Standard Plan ES-4D for attachment fitting details.
2. For wiring diagram, see Standard Plan ES-14B.
3. For additional notes and details, see Standard Plans ES-7M and ES-7N.
4. Handhole shall be located on the downstream side of traffic.
5. See project plans for type of standard to be installed.

STATE OF CALIFORNIA
DEPARTMENT OF TRANSPORTATION

ELECTRICAL SYSTEMS (FLASHING BEACON ON A TYPE 1, TYPE 15-FBS AND TYPE 40 STANDARD)

NO SCALE

RSP ES-7J DATED JULY 19, 2013 SUPERSEDES STANDARD PLAN ES-7J DATED MAY 20, 2011 - PAGE 471 OF THE STANDARD PLANS BOOK DATED 2010.

REVISED STANDARD PLAN RSP ES-7J

2010 REVISED STANDARD PLAN RSP ES-7J

6-26-13

DIST	COUNTY	ROUTE	POST MILES TOTAL PROJECT	SHEET NO.	TOTAL SHEETS
08	SBd	247	1.8/9.6	186	196

Theresa Gabriel
REGISTERED ELECTRICAL ENGINEER

Theresa Aziz Gabriel
No. E15129
Exp. 6-30-14
ELECTRICAL
REGISTERED PROFESSIONAL ENGINEER
STATE OF CALIFORNIA

July 19, 2013
PLANS APPROVAL DATE

THE STATE OF CALIFORNIA OR ITS OFFICERS OR AGENTS SHALL NOT BE RESPONSIBLE FOR THE ACCURACY OR COMPLETENESS OF SCANNED COPIES OF THIS PLAN SHEET.

TO ACCOMPANY PLANS DATED 12-16-13

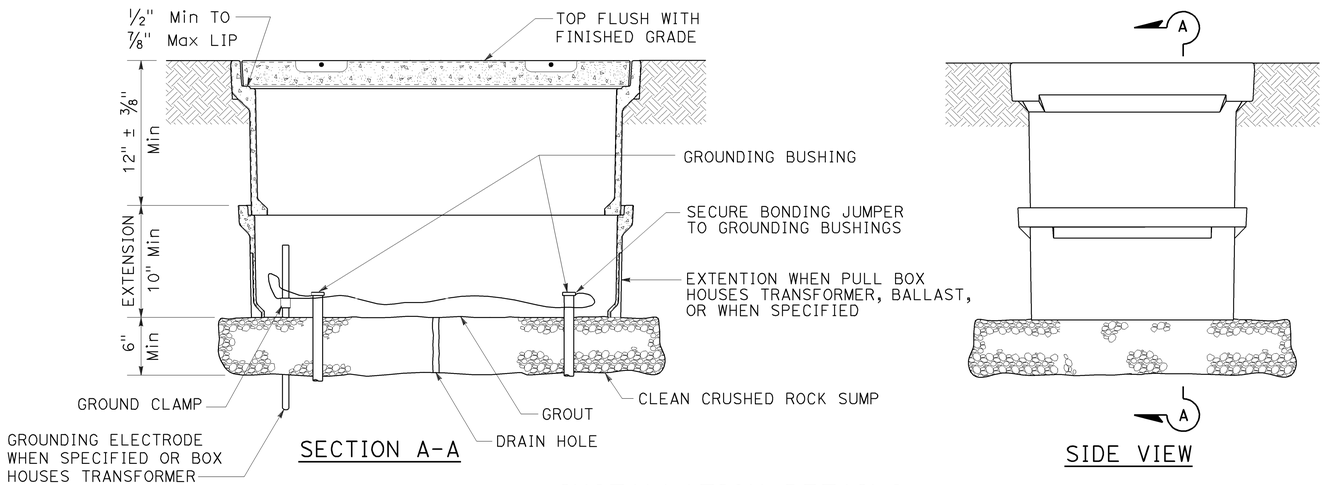

SECTION A-A

SIDE VIEW

INSTALLATION DETAILS

DETAIL A

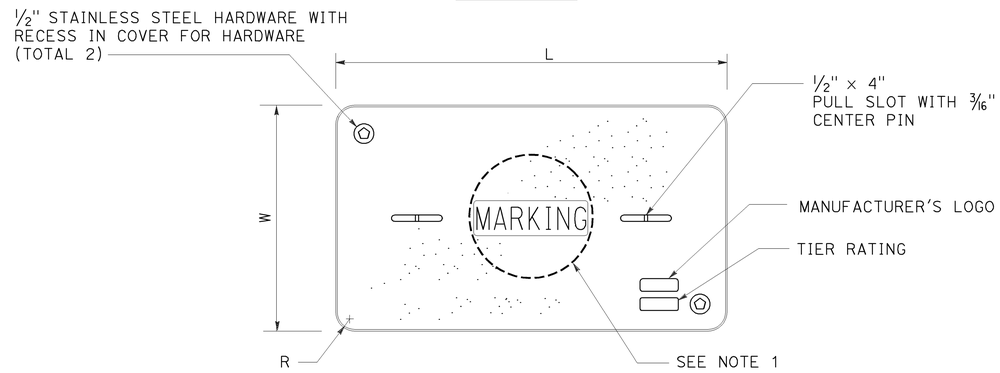

COVER TOP VIEW

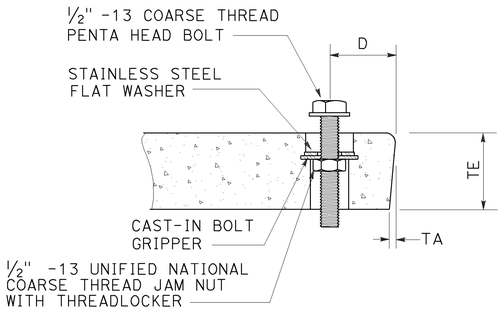

TYPICAL COVER CAPTIVE BOLT
OR SIMILAR

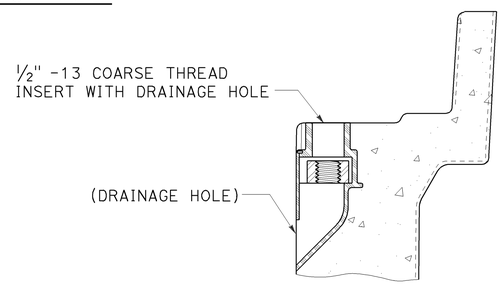

TYPICAL THREADED INSERT
OR SIMILAR

DIMENSION TABLE

PULL BOX	PULL BOX			COVER						
	MINIMUM DEPTH BOX	MINIMUM DEPTH EXTENSION	MAXIMUM WEIGHT	L	W	R	TE	TA	D	MAXIMUM WEIGHT
No. 3½	12"	N/A	40 lb	1′ - 3⅜"	10⅛"	1⅜"	2"	⅛"	1¾"	30 lb
No. 5	12"	10"	55 lb	1′ - 11¼"	1′ - 1¾"	1⅜"	2"	⅛"	1¾"	60 lb
No. 6	12"	10"	70 lb	2′ - 6½"	1′ - 5½"	1⅜"	2"	⅛"	2"	85 lb

NOTES:

1. Pull box covers shall be marked as follows: "SERVICE" Service circuits between service point and service disconnect; "SPRINKLER-CONTROL" sprinkler control circuits, 50 V or less; "CALTRANS" on all pull boxes, except pull boxes marked "SPRINKLER-CONTROL"; and "TELEPHONE" Telephone service;
   A) No. 3½ pull box.
      1) "SIGNAL" - Traffic signal circuits with or without lighting or sign lighting circuits.
      2) "LIGHTING" - Lighting or sign lighting circuits where voltage is under 600 V.
   B) No. 5, 6, 9 or 9A pull box.
      1) "TRAFFIC SIGNAL" - Traffic signal circuits with or without lighting or sign lighting circuits.
      2) "LIGHTING" - Lighting or sign lighting circuits where voltage is under 600 V.
      3) "LIGHTING-HIGH VOLTAGE" - Lighting or sign lighting circuits where voltage is above 600 V.
      4) "IRRIGATION" - Circuits to irrigation controller 120 V or more.
      5) "RAMP METER" - Ramp meter circuits.
      6) "COUNT STATION" - Count or speed monitor circuits.
      7) "COMMUNICATIONS" - Communication circuits.
      8) "TOS COMMUNICATIONS" - TOS communication line.
      9) "TOS POWER" - TOS power.
      10) "TDC POWER" - Telephone demarcation cabinet power.
      11) "CCTV" - Closed circuit television circuits.
      12) "TMS" - Traffic monitoring station circuits.
      13) "CMS" - Changeable message sign circuits.
      14) "HAR" - Highway advisory radio circuits.
      15) "BOOSTER PUMP" - Booster pump circuit.
2. The nominal dimensions of the opening in which the cover sets shall be the same as the cover dimensions except the length and width dimensions shall be ⅛" greater.
3. Covers and boxes shall be interchangeable with California standard male and female gages. When interchanged with a standard male or female gage, the top surfaces shall be flush within ⅛". Top outside radius of covers and pull boxes shall have a ⅛" radius.
4. Pull box extension may be another pull box as long as the bottom edge of the pull box can fit into the cover opening.
5. All dimensions for the cover for non-traffic pull box are nominal values.

STATE OF CALIFORNIA
DEPARTMENT OF TRANSPORTATION

ELECTRICAL SYSTEMS (NON-TRAFFIC PULL BOX)

NO SCALE

RSP ES-8A DATED JULY 19, 2013 SUPERSEDES RSP ES-8A DATED JANUARY 20, 2012 THAT SUPPLEMENTS THE STANDARD PLANS BOOK DATED 2010.

REVISED STANDARD PLAN RSP ES-8A

2010 REVISED STANDARD PLAN RSP ES-8A

7-15-13

DIST	COUNTY	ROUTE	POST MILES TOTAL PROJECT	SHEET NO.	TOTAL SHEETS
08	SBd	247	1.8/9.6	187	196

Theresa Gabriel
REGISTERED ELECTRICAL ENGINEER

REGISTERED PROFESSIONAL ENGINEER
Theresa Aziz Gabriel
No. E15129
Exp. 6-30-14
ELECTRICAL
STATE OF CALIFORNIA

July 19, 2013
PLANS APPROVAL DATE

THE STATE OF CALIFORNIA OR ITS OFFICERS OR AGENTS SHALL NOT BE RESPONSIBLE FOR THE ACCURACY OR COMPLETENESS OF SCANNED COPIES OF THIS PLAN SHEET.

TO ACCOMPANY PLANS DATED 12-16-13

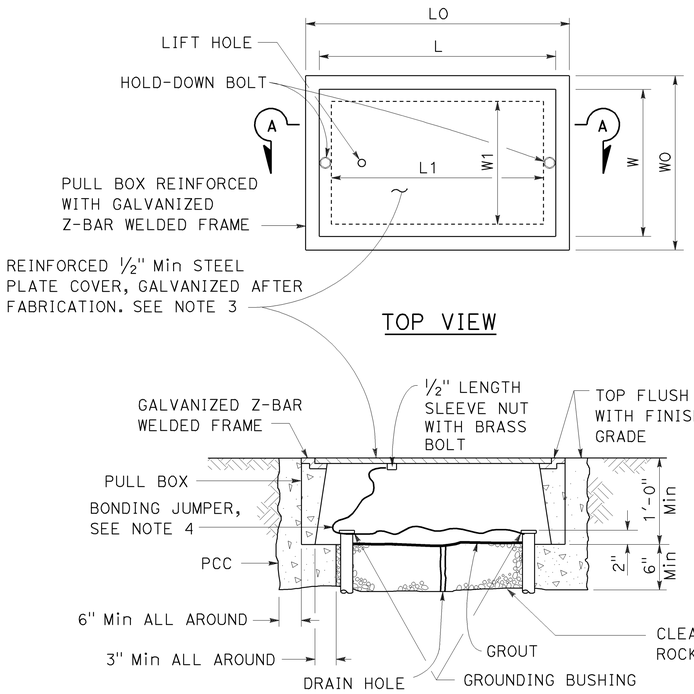

SECTION A-A

No. 3½(T), No. 5(T) AND No. 6(T) TRAFFIC PULL BOX

NOTES:

1. Traffic pull box shall be provided with steel cover and special concrete footing. Steel cover shall have embossed non-skid pattern.
2. Steel reinforcing shall be as regularly used in the standard products of the respective manufacturer.
3. Pull box covers shall be marked as follows: "SERVICE" Service circuits between service point and service disconnect; "SPRINKLER-CONTROL" Sprinkler control circuits, 50 V or less; "CALTRANS" On all pull boxes, except pull boxes marked "SPRINKLER-CONTROL"; and "TELEPHONE" Telephone service.
   A) No. 3½(T) pull box.
      1) "SIGNAL" - Traffic signal circuits with or without lighting or sign lighting circuits.
      2) "LIGHTING" - Lighting or sign lighting circuits where voltage is under 600 V.
   B) No. 5(T) or 6(T) pull box.
      1) "TRAFFIC SIGNAL" - Traffic signal circuits with or without lighting or sign lighting circuits.
      2) "LIGHTING" - Lighting or sign lighting circuits where voltage is under 600 V.
      3) "LIGHTING-HIGH VOLTAGE" - Lighting or sign lighting circuits where voltage is above 600 V.
      4) "IRRIGATION" - Circuits to irrigation controller 120 V or more.
      5) "RAMP METER" - Ramp meter circuits.
      6) "COUNT STATION" - Count or speed monitor circuits.
      7) "COMMUNICATION" - Communication circuits.
      8) "TOS COMMUNICATIONS" - TOS communications line.
      9) "TOS POWER" - TOS power.
      10) "TDC POWER" - Telephone demarcation cabinet power.
      11) "CCTV" - Closed circuit television circuits.
      12) "TMS" - Traffic monitoring station circuits.
      13) "CMS" - Changeable message sign circuits.
      14) "HAR" - Highway advisory radio circuits.
      15) "BOOSTER PUMP" - Booster pump circuit.
4. Bonding jumper for metal covers shall be 3' long, minimum.
5. The nominal dimensions of the opening in which the cover sets shall be the same as the cover dimensions except the length and width dimensions shall be ⅛" greater.
6. Covers and boxes shall be interchangeable with California standard male and female gages. When interchanged with a standard male or female gage, the top surfaces shall be flush within ⅛".

DIMENSION TABLE

PULL BOX	PULL BOX						COVER				
	MINIMUM * THICKNESS	MINIMUM DEPTH BOX AND EXTENSION	WO	LO	L1	W1	L **	W **	R	EDGE THICKNESS	EDGE TAPER
No. 3½(T)	1½"	1'-0"	1'-5"± 1"	1'-8⅞"±	1'-2½"±	10⅝"± 1"	1'-8"±	1'-1¾"±	0"	½"	NONE
No. 5(T)	1¾"	1'-0"	1'-11½"± 1"	2'-5½"±	1'-7"±	1'-1"± 1"	2'-3"±	1'-4"±	0"	½"	NONE
No. 6(T)	2"	1'-0"	2'-6"± 1"	2'-11½"±	1'-11½"±	1'-5"± 1"	2'-9"±	1'-8"±	0"	½"	NONE

* EXCLUDING CONDUIT WEB ** TOP DIMENSION

STATE OF CALIFORNIA
DEPARTMENT OF TRANSPORTATION

ELECTRICAL SYSTEMS (TRAFFIC PULL BOX)

NO SCALE

RSP ES-8B DATED JULY 19, 2013 SUPERSEDES RSP ES-8B DATED JANUARY 20, 2012 THAT SUPPLEMENTS THE STANDARD PLANS BOOK DATED 2010.

REVISED STANDARD PLAN RSP ES-8B

2010 REVISED STANDARD PLAN RSP ES-8B

7-15-13

Dist	COUNTY	ROUTE	POST MILES TOTAL PROJECT	SHEET No.	TOTAL SHEETS
08	SBd	247	1.8/9.6	188	196

LICENSED LANDSCAPE ARCHITECT

July 19, 2013
PLANS APPROVAL DATE

Gregory A. Balzer 2015
08 License Date
2-28-15
Renewal Date
7-19-13
Date
LICENSED LANDSCAPE ARCHITECT
STATE OF CALIFORNIA

THE STATE OF CALIFORNIA OR ITS OFFICERS OR AGENTS SHALL NOT BE RESPONSIBLE FOR THE ACCURACY OR COMPLETENESS OF SCANNED COPIES OF THIS PLAN SHEET.

TO ACCOMPANY PLANS DATED 12-16-13

A

AB	AGGREGATE BASE
ABS	ACRYLONITRILE-BUTADIENE-STYRENE
AC	ASPHALT CONCRETE
ACC	ARMOR-CLAD CONDUCTORS
Adj	ADJACENT/ADJUSTABLE
AIC	AUXILIARY IRRIGATION CONTROLLER
Alt	ALTERNATIVE
AMEND	AMENDMENT
ARV	AIR RELEASE VALVE
AUTO	AUTOMATIC
AUX	AUXILIARY
AVB	ATMOSPHERIC VACUUM BREAKER

B

B&B	BALLED AND BURLAPPED
B/B	BRASS/BRONZE
B/B/PL	BRASS/BRONZE/PLASTIC
B/PL	BRASS/PLASTIC
BFM	BONDED FIBER MATRIX
Bit Ctd	BITUMINOUS COATED
BP	BOOSTER PUMP
BPA	BACKFLOW PREVENTER ASSEMBLY
BPE	BACKFLOW PREVENTER ENCLOSURE
BV	BALL VALVE

C

C	CONDUIT
CAP	CORRUGATED ALUMINUM PIPE
CARV	COMBINATION AIR RELEASE VALVE
CB	COUPLING BAND
CCA	CAM COUPLER ASSEMBLY
CEC	CONTROLLER ENCLOSURE CABINET
CHDPE	CORRUGATED HIGH DENSITY POLYETHYLENE
CL	CHAIN LINK
CNC	CONTROL AND NEUTRAL CONDUCTORS
Conc	CONCRETE
CP	COPPER PIPE
CS	COMPOST SOCK
CSP	CORRUGATED STEEL PIPE
CST	CENTER STRIP
CV	CHECK VALVE

D

Dia	DIAMETER
DIP	DUCTILE IRON PIPE
DIT	DRIP IRRIGATION TUBING
DG	DECOMPOSED GRANITE
DN	DIAMETER NOMINAL
DVA	DRIP VALVE ASSEMBLY

E

EC	EROSION CONTROL
ECTC	EROSION CONTROL TECHNOLOGY COUNCIL
Elect	ELECTRIC/ELECTRICAL
Elev	ELEVATION
ELL	ELBOW
ENCL	ENCLOSURE
EP	EDGE OF PAVEMENT
ES	EDGE OF SHOULDER
EST	END STRIP
ESTB	ESTABLISHMENT
ETW	EDGE OF TRAVELED WAY

F

F	FULL CIRCLE
F/P	FULL/PART CIRCLE
FCV	FLOW CONTROL VALVE
FERT	FERTILIZER
FG	FINISHED GRADE
FH	FLEXIBLE HOSE
FIPT	FEMALE IRON PIPE THREAD
FIS	FERTILIZER INJECTOR SYSTEM
FL	FLOW LINE
FR	FIBER ROLL
FS	FLOW SENSOR
FSC	FLOW SENSOR CABLE
FV	FLUSH VALVE

G

Galv	GALVANIZED
GARV	GARDEN VALVE
GARVA	GARDEN VALVE ASSEMBLY
GM	GRAVEL MULCH
GPH	GALLONS PER HOUR
GPM	GALLONS PER MINUTE
GSP	GALVANIZED STEEL PIPE
GV	GATE VALVE

H

H	HALF CIRCLE
HDPE	HIGH DENSITY POLYETHYLENE
HP	HORSEPOWER/HINGE POINT
HPL	HIGH PRESSURE LINE
Hwy	HIGHWAY

I

IC	IRRIGATION CONTROLLER
ICC	IRRIGATION CONTROLLER(S) IN CONTROLLER ENCLOSURE CABINET
ID	INSIDE DIAMETER
IFS	IRRIGATION FILTRATION SYSTEM
IPS	IRON PIPE SIZE
IPT	IRON PIPE THREAD
Irr	IRRIGATION

L

L	LENGTH

M

Max	MAXIMUM
MBGR	METAL BEAM GUARD RAILING
MCV	MANUAL CONTROL VALVE
MIC	MASTER IRRIGATION CONTROLLER
Min	MINIMUM
MIPT	MALE IRON PIPE THREAD
Misc	MISCELLANEOUS
Mtl	MATERIAL
MVP	MAINTENANCE VEHICLE PULLOUT

N

NCN	NO COMMON NAME
NL	NOZZLE LINE
No.	NUMBER
NPT	NATIONAL PIPE THREAD

O

O/C	ON CENTER
OD	OUTSIDE DIAMETER
OL	OVERLAP

P

P	PART CIRCLE
PB	PULL BOX
PCC	PORTLAND CEMENT CONCRETE
PE	POLYETHYLENE
Pkt	PACKET
PL	PLASTIC
PLS	PURE LIVE SEED
PLT	PLANT/PLANTING
PLT ESTB	PLANT ESTABLISHMENT
PM	POST MILE
PR	PRESSURE RATED
PRLV	PRESSURE RELIEF VALVE
PRV	PRESSURE REGULATING VALVE
PVC	POLYVINYL CHLORIDE
Pvmt	PAVEMENT

Q

Q	QUARTER CIRCLE
QCV	QUICK COUPLING VALVE

NOTE:
For additional abbreviations, see Standard Plans A10A and A10B.

R

R	RADIUS
RCP	REINFORCED CONCRETE PIPE
RCV	REMOTE CONTROL VALVE
RCVM	REMOTE CONTROL VALVE (MASTER)
RCVMF	REMOTE CONTROL VALVE (MASTER) W/FLOW SENSOR
RCVP	REMOTE CONTROL VALVE W/PRESSURE REGULATOR
RCW	RECYCLED WATER
RECP	ROLLED EROSION CONTROL PRODUCT
REQ	REQUIRED
RICS	REMOTE IRRIGATION CONTROL SYSTEM
R/W	RIGHT OF WAY

S

S	SLIP
SCH	SCHEDULE
SF	STATE-FURNISHED
Shld	SHOULDER
Sq	SQUARE
SST	SIDE STRIP
Sta	STATION
Std	STANDARD
SW	SIDEWALK/SOUND WALL

T

T	THIRD CIRCLE/THREAD
TLS	TRUCK LOADING STANDPIPE
TQ	THREE QUARTER CIRCLE
TRM	TURF REINFORCEMENT MAT
TT	TWO-THIRDS CIRCLE
TWSA	TREE WELL SPRINKLER ASSEMBLY
Typ	TYPICAL

U

UG	UNDERGROUND

W

W	WIDTH
W/	WITH
WM	WATER METER
WS	WYE STRAINER
WSA	WYE STRAINER ASSEMBLY
WSP	WELDED STEEL PIPE
WWM	WELDED WIRE MESH

STATE OF CALIFORNIA
DEPARTMENT OF TRANSPORTATION

LANDSCAPE AND EROSION CONTROL ABBREVIATIONS

NO SCALE

RSP H1 DATED JULY 19, 2013 SUPERSEDES STANDARD PLAN H1
DATED MAY 20, 2011 - PAGE 218 OF THE STANDARD PLANS BOOK DATED 2010.

REVISED STANDARD PLAN RSP H1

2010 REVISED STANDARD PLAN RSP H1

6-28-13

Dist	COUNTY	ROUTE	POST MILES TOTAL PROJECT	SHEET No.	TOTAL SHEETS
08	SBd	247	1.8/9.6	189	196

William K. Farnbach
REGISTERED CIVIL ENGINEER

July 19, 2013
PLANS APPROVAL DATE

REGISTERED PROFESSIONAL ENGINEER
William K. Farnbach
No. C49042
Exp. 9-30-14
CIVIL
STATE OF CALIFORNIA

THE STATE OF CALIFORNIA OR ITS OFFICERS OR AGENTS SHALL NOT BE RESPONSIBLE FOR THE ACCURACY OR COMPLETENESS OF SCANNED COPIES OF THIS PLAN SHEET.

TO ACCOMPANY PLANS DATED 12-16-13

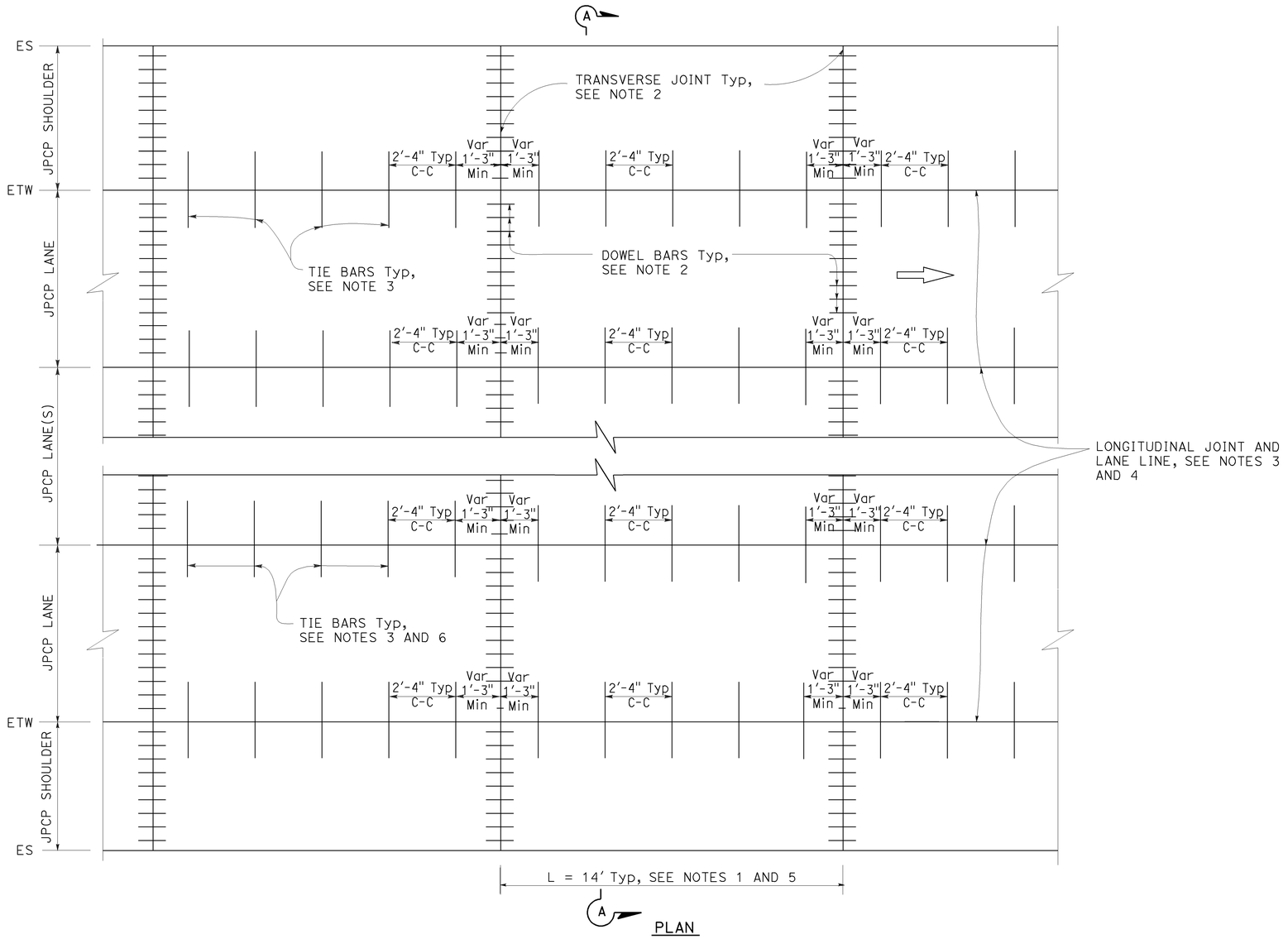

PLAN

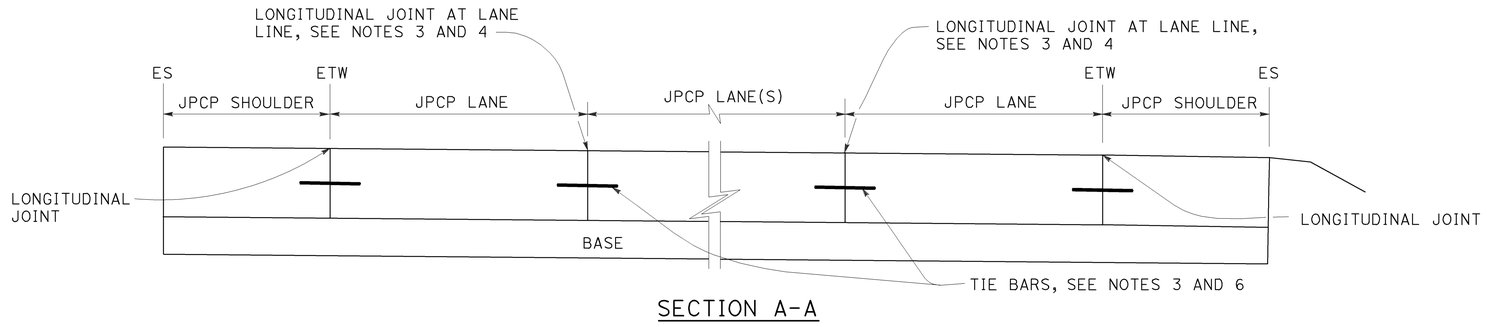

SECTION A-A

NOTES:

1. Transverse joint spacing may be adjusted to no less than 10' and no more than 14' to conform to bridges, change in pavement type, and hardened concrete pavement.
2. For transverse joint and dowel bar details not shown, see Revised Standard Plan RSP P10.
3. For longitudinal joint and tie bar details not shown, see Revised Standard Plan RSP P15.
4. For additional longitudinal joint layout details, see Revised Standard Plan RSP P18.
5. For joint layout at intersections, see Project Plans.
6. For dowel bars at longitudinal joint. see Revised Standard Plan RSP P18.

STATE OF CALIFORNIA
DEPARTMENT OF TRANSPORTATION

JOINTED PLAIN CONCRETE PAVEMENT NEW CONSTRUCTION

NO SCALE

RSP P1 DATED JULY 19, 2013 SUPERSEDES STANDARD PLAN P1
DATED MAY 20, 2011 - PAGE 125 OF THE STANDARD PLANS BOOK DATED 2010.

REVISED STANDARD PLAN RSP P1

2010 REVISED STANDARD PLAN RSP P1

5-31-13

Dist	COUNTY	ROUTE	POST MILES TOTAL PROJECT	SHEET No.	TOTAL SHEETS
08	SBd	247	1.8/9.6	190	196

William K. Farnbach
REGISTERED CIVIL ENGINEER

July 19, 2013
PLANS APPROVAL DATE

REGISTERED PROFESSIONAL ENGINEER — William K. Farnbach — No. C49042 — Exp. 9-30-14 — CIVIL — STATE OF CALIFORNIA

THE STATE OF CALIFORNIA OR ITS OFFICERS OR AGENTS SHALL NOT BE RESPONSIBLE FOR THE ACCURACY OR COMPLETENESS OF SCANNED COPIES OF THIS PLAN SHEET.

TO ACCOMPANY PLANS DATED 12-16-13

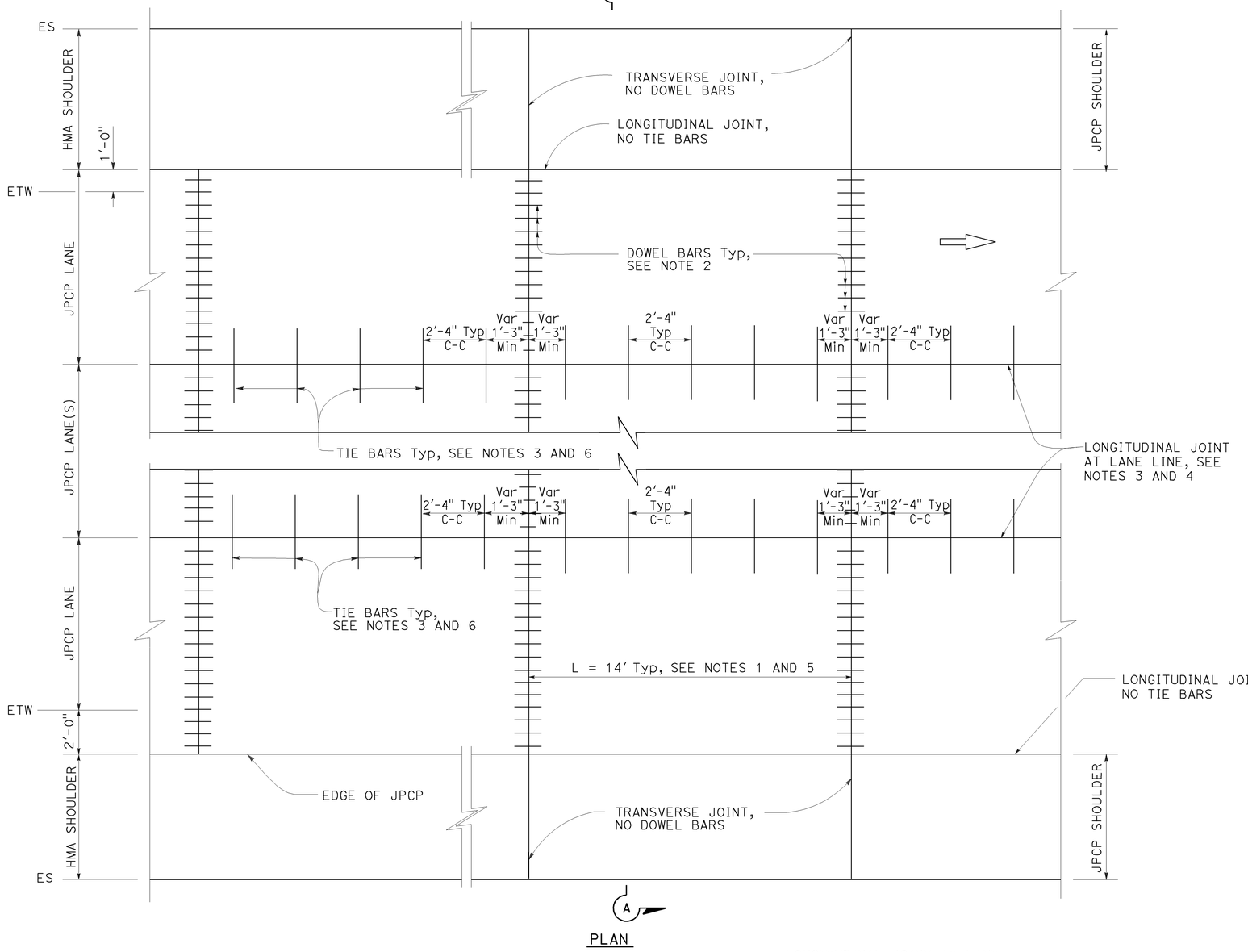

PLAN

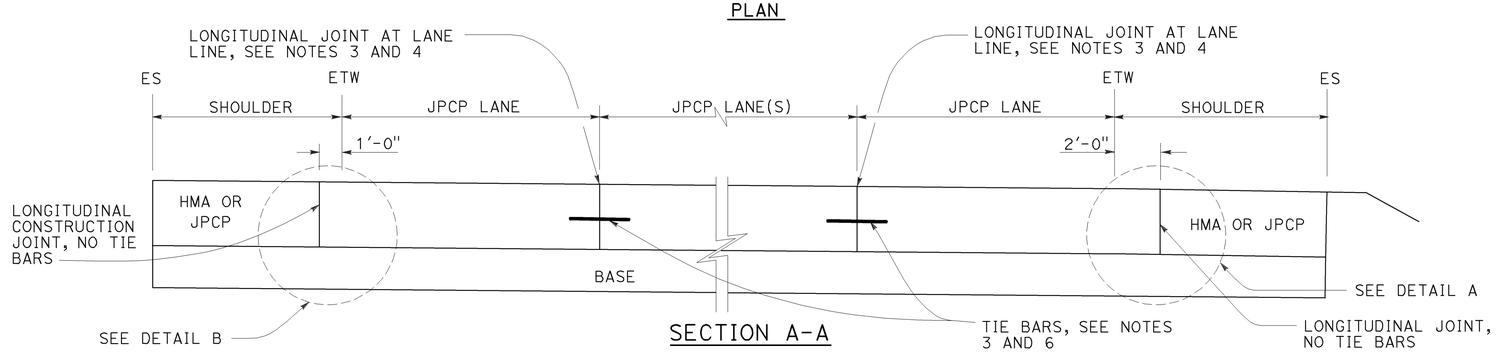

SECTION A-A

NOTES:

1. Transverse joint spacing may be adjusted to no less than 10′ and no more than 14′ to conform to bridges, change in pavement type, and hardened concrete pavement.
2. For transverse joint and dowel bar details not shown, see Revised Standard Plan RSP P10.
3. For longitudinal joint and tie bar details not shown, see Revised Standard Plan RSP P15.
4. For additional longitudinal joint layout details, see Revised Standard Plan RSP P18.
5. For joint layout at intersections, see Project Plans.
6. For dowel bars at longitudinal joint. see Revised Standard Plan RSP P18.
7. For limits of rumble strips, see Projects Plans.

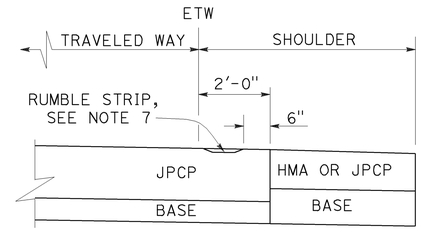

DETAIL A

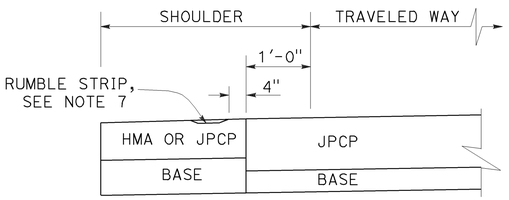

DETAIL B

STATE OF CALIFORNIA
DEPARTMENT OF TRANSPORTATION

JOINTED PLAIN CONCRETE PAVEMENT (WIDENED LANE) NEW CONSTRUCTION

NO SCALE

RSP P2 DATED JULY 19, 2013 SUPERSEDES STANDARD PLAN P2
DATED MAY 20, 2011 - PAGE 126 OF THE STANDARD PLANS BOOK DATED 2010.

REVISED STANDARD PLAN RSP P2

2010 REVISED STANDARD PLAN RSP P2

5-31-13

Dist	COUNTY	ROUTE	POST MILES TOTAL PROJECT	SHEET No.	TOTAL SHEETS
08	SBd	247	1.8/9.6	191	196

William K. Farnbach
REGISTERED CIVIL ENGINEER

July 19, 2013
PLANS APPROVAL DATE

REGISTERED PROFESSIONAL ENGINEER — William K. Farnbach — No. C49042 — Exp. 9-30-14 — CIVIL — STATE OF CALIFORNIA

THE STATE OF CALIFORNIA OR ITS OFFICERS OR AGENTS SHALL NOT BE RESPONSIBLE FOR THE ACCURACY OR COMPLETENESS OF SCANNED COPIES OF THIS PLAN SHEET.

TO ACCOMPANY PLANS DATED 12-16-13

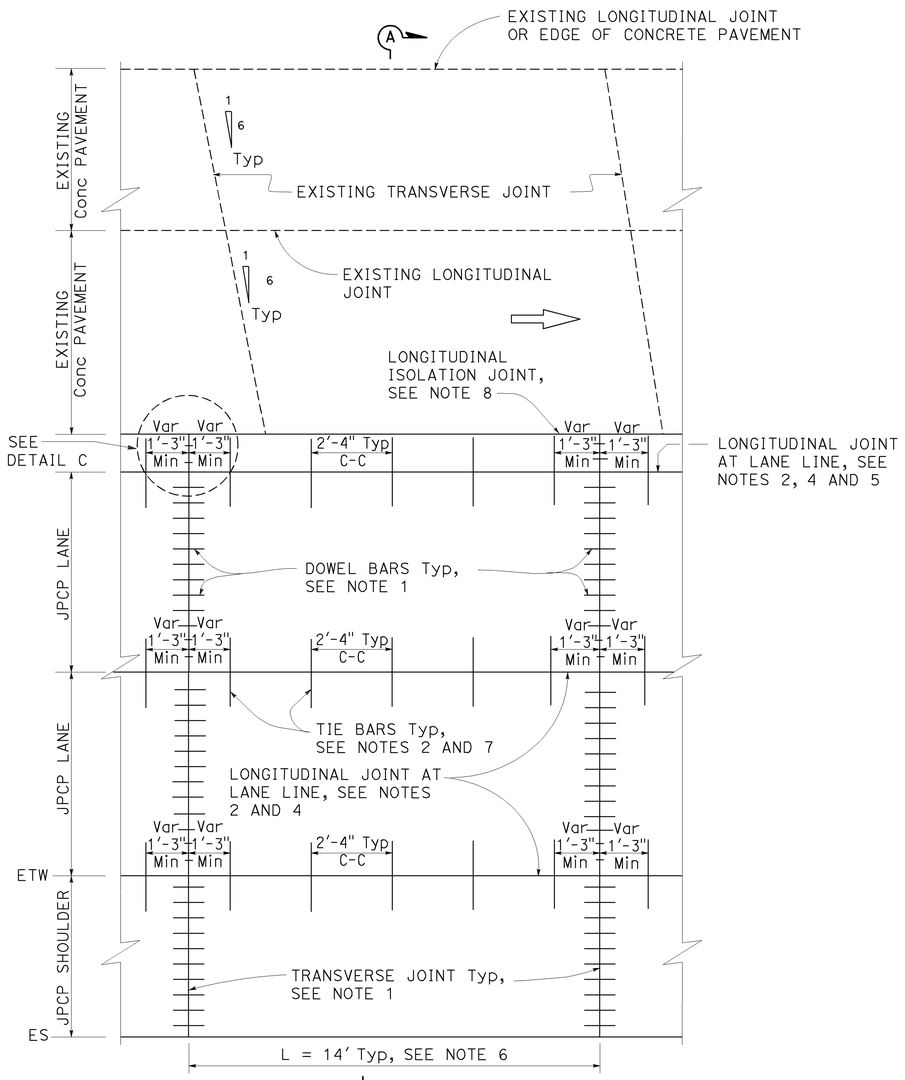

PLAN
ISOLATED
See Note 3

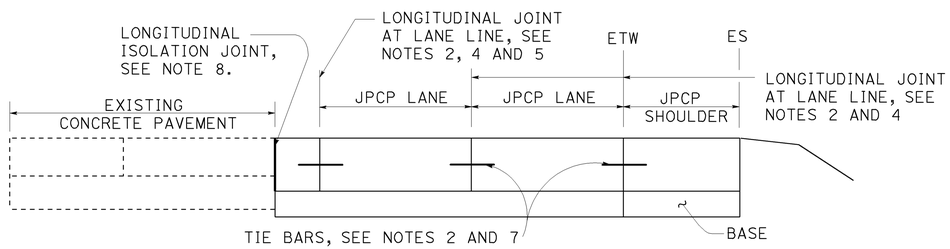

SECTION A-A

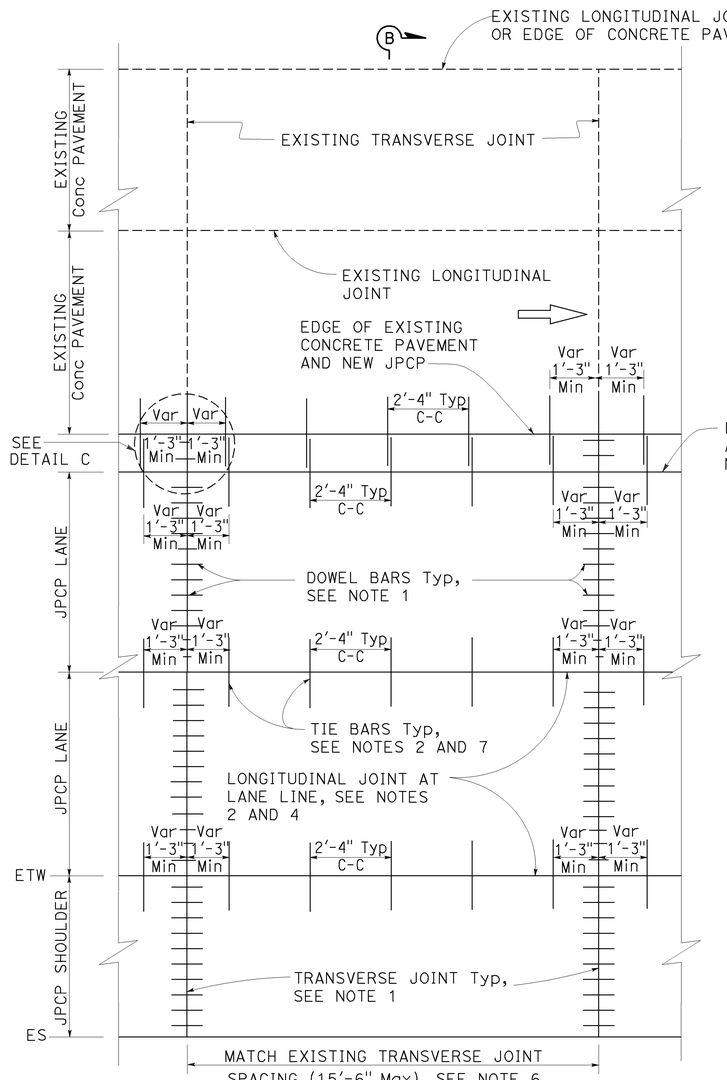

PLAN
TIED
See Note 3

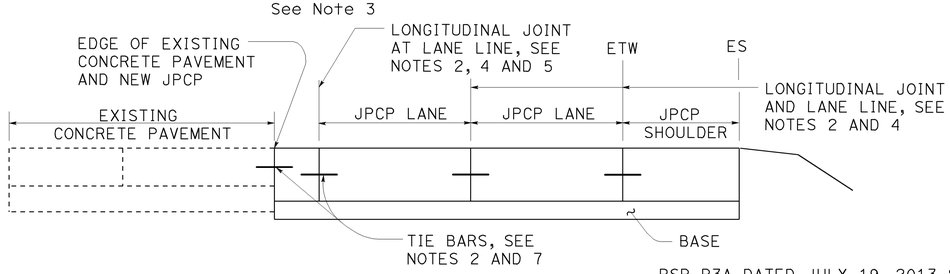

SECTION B-B

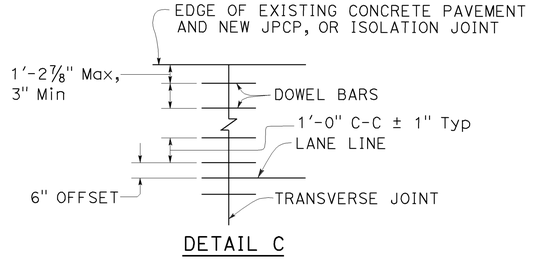

DETAIL C

NOTES:

1. For transverse joint and dowel bar details not shown, see Revised Standard Plan RSP P10.
2. For longitudinal joint and tie bar details not shown, see Revised Standard Plan RSP P15.
3. For joint layout at intersections, see Project Plans.
4. For additional longitudinal joint details, see Revised Standard Plan RSP P18.
5. Omit longitudinal joint when edge of new concrete pavement is 3'-3" or less from JPCP lane line.
6. Transverse joint spacing may be adjusted to no less than 10' and no more than 15'-6" to conform to bridges, change in pavement type and existing pavement.
7. For dowel bars at longitudinal joint. see Revised Standard Plan RSP P18.
8. For isolation joints, see Detail A on Revised Standard Plan RSP P18.

STATE OF CALIFORNIA
DEPARTMENT OF TRANSPORTATION

JOINTED PLAIN CONCRETE PAVEMENT LANE & SHOULDER ADDITION OR REPLACEMENT

NO SCALE

RSP P3A DATED JULY 19, 2013 SUPPLEMENTS THE STANDARD PLANS BOOK DATED 2010.

REVISED STANDARD PLAN RSP P3A

2010 REVISED STANDARD PLAN RSP P3A

5-31-13

Dist	COUNTY	ROUTE	POST MILES TOTAL PROJECT	SHEET No.	TOTAL SHEETS
08	SBd	247	1.8/9.6	192	196

William K. Farnbach
REGISTERED CIVIL ENGINEER

July 19, 2013
PLANS APPROVAL DATE

REGISTERED PROFESSIONAL ENGINEER
William K. Farnbach
No. C49042
Exp. 9-30-14
CIVIL
STATE OF CALIFORNIA

THE STATE OF CALIFORNIA OR ITS OFFICERS OR AGENTS SHALL NOT BE RESPONSIBLE FOR THE ACCURACY OR COMPLETENESS OF SCANNED COPIES OF THIS PLAN SHEET.

TO ACCOMPANY PLANS DATED 12-16-13

2010 REVISED STANDARD PLAN RSP P20

NOTES:

1. Details do not apply to isolation joints and longitudinal construction joints.
2. Tie bars, dowel bars, and bar reinforcement are not shown.
3. Depths are measured from the final concrete pavement surface elevation after any grinding.

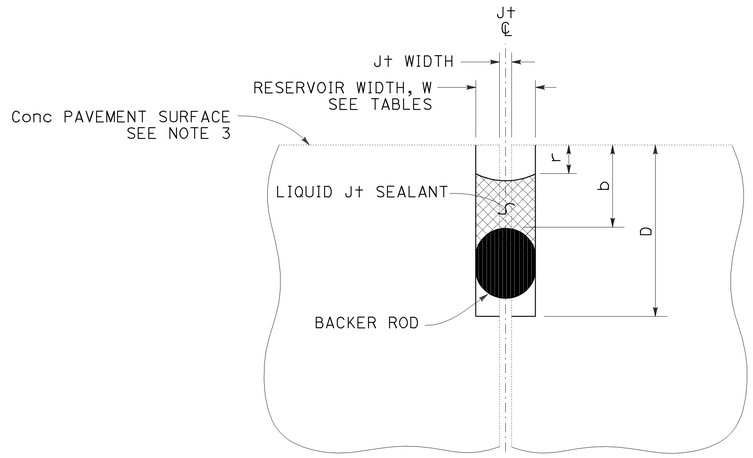

LIQUID JOINT SEALANT

RESERVOIR WIDTH W ±1/16"	LIQUID JOINT SEALANT DIMENSIONS					
	BACKER ROD NOMINAL Dia *	DEPTHS (ASPHALT RUBBER) **		DEPTHS (SILICONE)		
		RESERVOIR D ± 1/4"	BACKER ROD b ± 1/16"	RESERVOIR D ± 1/4"	BACKER ROD b ± 1/16"	RECESS r ± 1/16"
1/4"	3/8"	1 3/4"	7/8"	1 3/8"	1/2"	1/4"
3/8"	1/2"	1 7/8"	7/8"	1 1/2"	1/2"	1/4"
1/2"	3/4"	2"	7/8"	1 3/4"	9/16"	5/16"
5/8"	7/8"	2 1/4"	1"	2"	5/8"	5/16"
3/4"	1"	2 3/4"	1 1/8"	2 1/4"	3/4"	3/8"
7/8"	1 1/4"	3"	1 1/4"	2 1/2"	13/16"	3/8"
1"	1 1/2"	3 1/4"	1 3/8"	2 5/8"	7/8"	3/8"
1 1/8"	1 1/2"	3 1/2"	1 1/2"	2 13/16"	1"	1/2"

* Larger diameter backer rods may be substituted according to manufacturer recommendations if reservoir depth is increased equivalently.

** Asphalt rubber sealant recess depth "r" varies from 1/4" to 3/8"

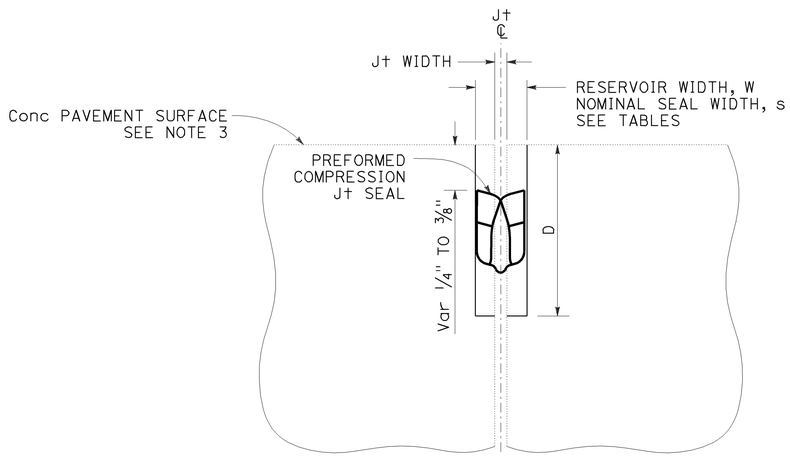

PREFORMED COMPRESSION JOINT SEAL

RESERVOIR WIDTH W ±1/16"	PREFORMED COMPRESSION JOINT SEAL DIMENSIONS	
	NOMINAL SEAL WIDTH s	RESERVOIR DEPTH D ± 1/4"
1/4"	7/16"	1 1/4"
3/8"	11/16"	1 7/16"
1/2"	13/16"	1 11/16"
5/8"	1"	1 7/8"
3/4"	1 1/4"	2 1/8"
7/8"	1 5/8"	2 5/8"
1"	1 5/8"	2 5/8"
1 1/8"	2"	2 7/8"

Const SEASON	Min RESERVOIR WIDTH * W ± 1/16"
WINTER	1/4"
SPRING	3/8"
SUMMER	
FALL	

* Minimum reservoir width for replace joint seal = existing joint width + 1/8"

STATE OF CALIFORNIA
DEPARTMENT OF TRANSPORTATION

JOINT SEALS

NO SCALE

RSP P20 DATED JULY 19, 2013 SUPERSEDES STANDARD PLAN P20
DATED MAY 20, 2011 - PAGE 136 OF THE STANDARD PLANS BOOK DATED 2010.

REVISED STANDARD PLAN RSP P20

6-17-13

Dist	COUNTY	ROUTE	POST MILES TOTAL PROJECT	SHEET No.	TOTAL SHEETS
08	SBd	247	1.8/9.6	193	196

REGISTERED CIVIL ENGINEER

April 19, 2013
PLANS APPROVAL DATE

REGISTERED PROFESSIONAL ENGINEER
Gurinderpal Bhullar
No. C48815
Exp. 9-30-14
CIVIL
STATE OF CALIFORNIA

THE STATE OF CALIFORNIA OR ITS OFFICERS OR AGENTS SHALL NOT BE RESPONSIBLE FOR THE ACCURACY OR COMPLETENESS OF SCANNED COPIES OF THIS PLAN SHEET.

TO ACCOMPANY PLANS DATED 12-16-13

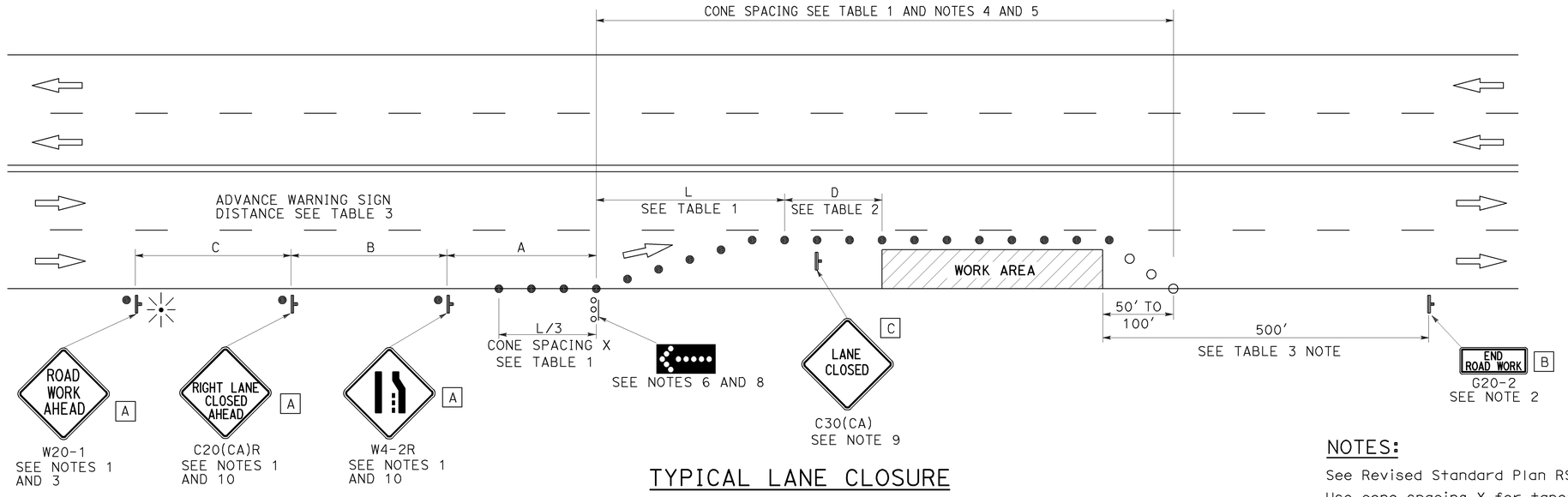

TYPICAL LANE CLOSURE

NOTES:

See Revised Standard Plan RSP T9 for tables.

Use cone spacing X for taper segment, Y for tangent segment or Z for conflict situations, as approriate, per Table 1, unless X, Y, or Z cone spacing is shown on this sheet.

Unless otherwise specified in the special provisions, all temporary warning signs shall have black legend on fluorescent orange background.

California codes are designated by (CA). Otherwise, Federal (MUTCD) codes are shown.

LEGEND

- TRAFFIC CONE
- TRAFFIC CONE (OPTIONAL TAPER)
- TEMPORARY TRAFFIC CONTROL SIGN
- FLASHING ARROW SIGN (FAS)
- FAS SUPPORT OR TRAILER
- PORTABLE FLASHING BEACON

SIGN PANEL SIZE (Min)

- A 48" × 48"
- B 36" × 18"
- C 30" × 30"

NOTES:

1. Each advance warning sign shall be equipped with at least two flags for daytime closure. Each flag shall be at least 16" x 16" in size and shall be orange or fluorescent red-orange in color. Flashing beacons shall be placed at the locations indicated for lane closure during hours of darkness.
2. A G20-2 "END ROAD WORK" sign, as appropriate, shall be placed at the end of the lane closure unless the end of work area is obvious, or ends within a larger project's limits.
3. If the W20-1 sign would follow within 2000' of a stationary W20-1 or G20-1 "ROAD WORK NEXT _____ MILES", use a C20(CA) sign for the first advance warning sign.
4. All cones used for lane closures during the hours of darkness shall be fitted with retroreflective bands (or sleeves) as specified in the specifications.
5. Portable delineators, placed at one-half the spacing indicated for traffic cones, may be used instead of cones for daytime closures only.
6. Flashing arrow sign shall be either Type I or Type II.
7. For approach speeds over 50 mph, use the "Traffic Control System for Lane Closure On Freeways And Expressways" plan for lane closure details and requirements.
8. A minimum 1500' of sight distance shall be provided where possible for vehicles approaching the first flashing arrow sign. Lane closures shall not begin at the top of crest vertical curve or on a horizontal curve.
9. Place a C30(CA) sign every 2000' throughout length of lane closure.
10. Median lane closures shall conform to the details as shown except that C20(CA)L and W4-2L signs shall be used.
11. At least one person shall be assigned to provide full time maintenance of traffic control devices for lane closure unless, otherwise directed by the Engineer.

STATE OF CALIFORNIA
DEPARTMENT OF TRANSPORTATION

TRAFFIC CONTROL SYSTEM FOR LANE CLOSURE ON MULTILANE CONVENTIONAL HIGHWAYS

NO SCALE

RSP T11 DATED APRIL 19, 2013 SUPERSEDES STANDARD PLAN T11 DATED MAY 20, 2011 - PAGE 239 OF THE STANDARD PLANS BOOK DATED 2010.

REVISED STANDARD PLAN RSP T11

2010 REVISED STANDARD PLAN RSP T11

4-2-13

Dist	COUNTY	ROUTE	POST MILES TOTAL PROJECT	SHEET No.	TOTAL SHEETS
08	SBd	247	1.8/9.6	194	196

REGISTERED CIVIL ENGINEER

April 19, 2013
PLANS APPROVAL DATE

REGISTERED PROFESSIONAL ENGINEER
Gurinderpal Bhullar
No. C48815
Exp. 9-30-14
CIVIL
STATE OF CALIFORNIA

THE STATE OF CALIFORNIA OR ITS OFFICERS OR AGENTS SHALL NOT BE RESPONSIBLE FOR THE ACCURACY OR COMPLETENESS OF SCANNED COPIES OF THIS PLAN SHEET.

TO ACCOMPANY PLANS DATED 12-16-13

NOTES:

See Revised Standard Plan RSP T9 for tables.

Use cone spacing X for taper segment, Y for tangent segment or Z for conflict situations, as approriate, per Table 1, unless X, Y, or Z cone spacing is shown on this sheet.

Unless otherwise specified in the special provisions, all temporary warning signs shall have black legend on fluorescent orange background.

California codes are designated by (CA). Otherwise, Federal (MUTCD) codes are shown.

TYPICAL LANE CLOSURE WITH REVERSIBLE CONTROL

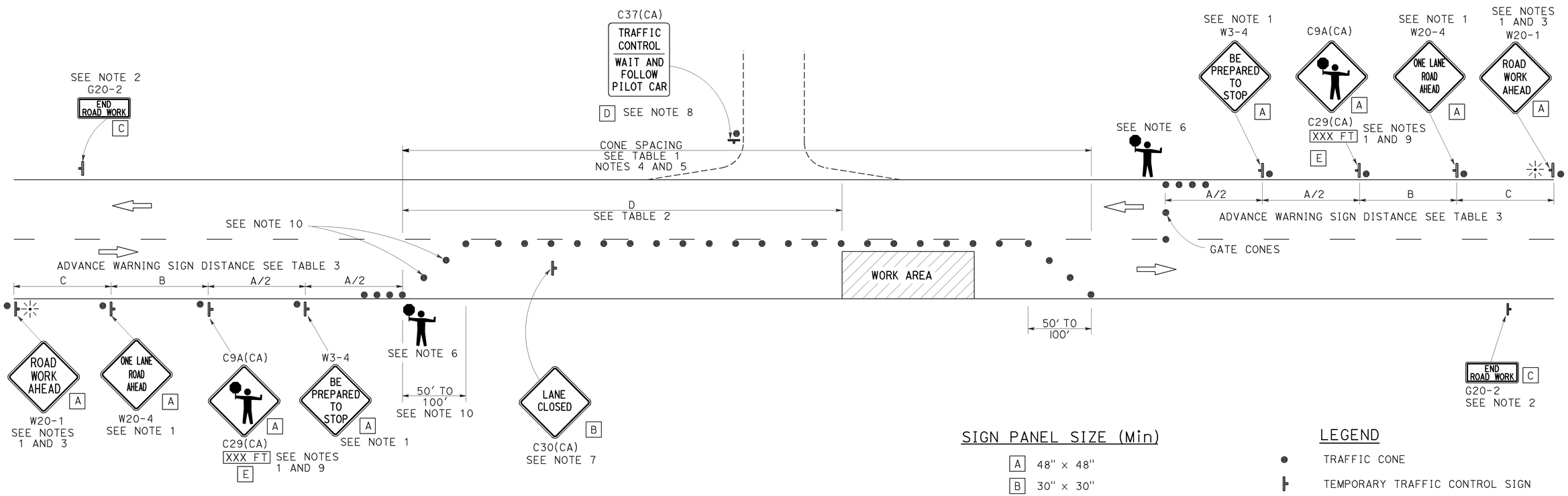

SIGN PANEL SIZE (Min)

A	48" × 48"
B	30" × 30"
C	36" × 18"
D	36" × 42"
E	20" × 7"

LEGEND

- TRAFFIC CONE
- TEMPORARY TRAFFIC CONTROL SIGN
- PORTABLE FLASHING BEACON
- FLAGGER

NOTES:

1. Each advance warning sign in each direction of travel shall be equipped with at least two flags for daytime closure. Each flag shall be at least 16" x 16" in size and shall be orange or fluorescent red-orange in color. Flashing beacons shall be placed at the locations indicated for lane closure during hours of darkness.
2. A G20-2 "END ROAD WORK" sign, as appropriate, shall be placed at the end of the lane control unless the end of work area is obvious, or ends within a larger project's limits.
3. If the W20-1 sign would follow within 2000' of a stationary W20-1 or G20-1 "ROAD WORK NEXT _____ MILES", use a W20-4 sign for the first advance warning sign.
4. All cones used for lane closures during the hours of darkness shall be fitted with retroreflective bands (or sleeves) as specified in the specifications.
5. Portable delineators, placed at one-half the spacing indicated for traffic cones, may be used instead of cones for daytime closures only.
6. Additional advance flaggers may be required. Flagger should stand in a conspicuous place, be visible to approaching traffic as well as approaching vehicles after the first vehicle has stopped. During the hours of darkness, the flagging-station and flagger shall be illuminated and clearly visible to approaching traffic. The illumination footprint of the lighting on the ground shall be at least 20' in diameter. Place a minimum of four cones at 50' intervals in advance of flagger station as shown.
7. Place C30(CA) "LANE CLOSED" sign at 500' to 1000' intervals throughout extended work areas. They are optional if the work area is visible from the flagger station.
8. When a pilot car is used, place a C37(CA) "TRAFFIC CONTROL-WAIT AND FOLLOW PILOT CAR" sign with black legend on white background at all intersections, driveways and alleys without a flagger within traffic control area. Signs shall be clean and visible at all times. Where traffic can not be effectively self-regulated, at least one flagger shall be used at each intersection within traffic control area.
9. An optional C29(CA) sign may be placed below the C9A(CA) sign.
10. Either traffic cones or barricades shall be placed on the taper. Barricades shall be Type I, II, or III.

STATE OF CALIFORNIA
DEPARTMENT OF TRANSPORTATION

TRAFFIC CONTROL SYSTEM FOR LANE CLOSURE ON TWO LANE CONVENTIONAL HIGHWAYS

NO SCALE

RSP T13 DATED APRIL 19, 2013 SUPERSEDES STANDARD PLAN T13 DATED MAY 20, 2011 - PAGE 241 OF THE STANDARD PLANS BOOK DATED 2010.

REVISED STANDARD PLAN RSP T13

2010 REVISED STANDARD PLAN RSP T13

4-2-13

Dist	COUNTY	ROUTE	POST MILES TOTAL PROJECT	SHEET No.	TOTAL SHEETS
08	SBd	247	1.8/9.6	195	196

REGISTERED CIVIL ENGINEER

April 19, 2013
PLANS APPROVAL DATE

REGISTERED PROFESSIONAL ENGINEER
Gurinderpal Bhullar
No. C48815
Exp. 9-30-14
CIVIL
STATE OF CALIFORNIA

THE STATE OF CALIFORNIA OR ITS OFFICERS OR AGENTS SHALL NOT BE RESPONSIBLE FOR THE ACCURACY OR COMPLETENESS OF SCANNED COPIES OF THIS PLAN SHEET.

TO ACCOMPANY PLANS DATED 12-16-13

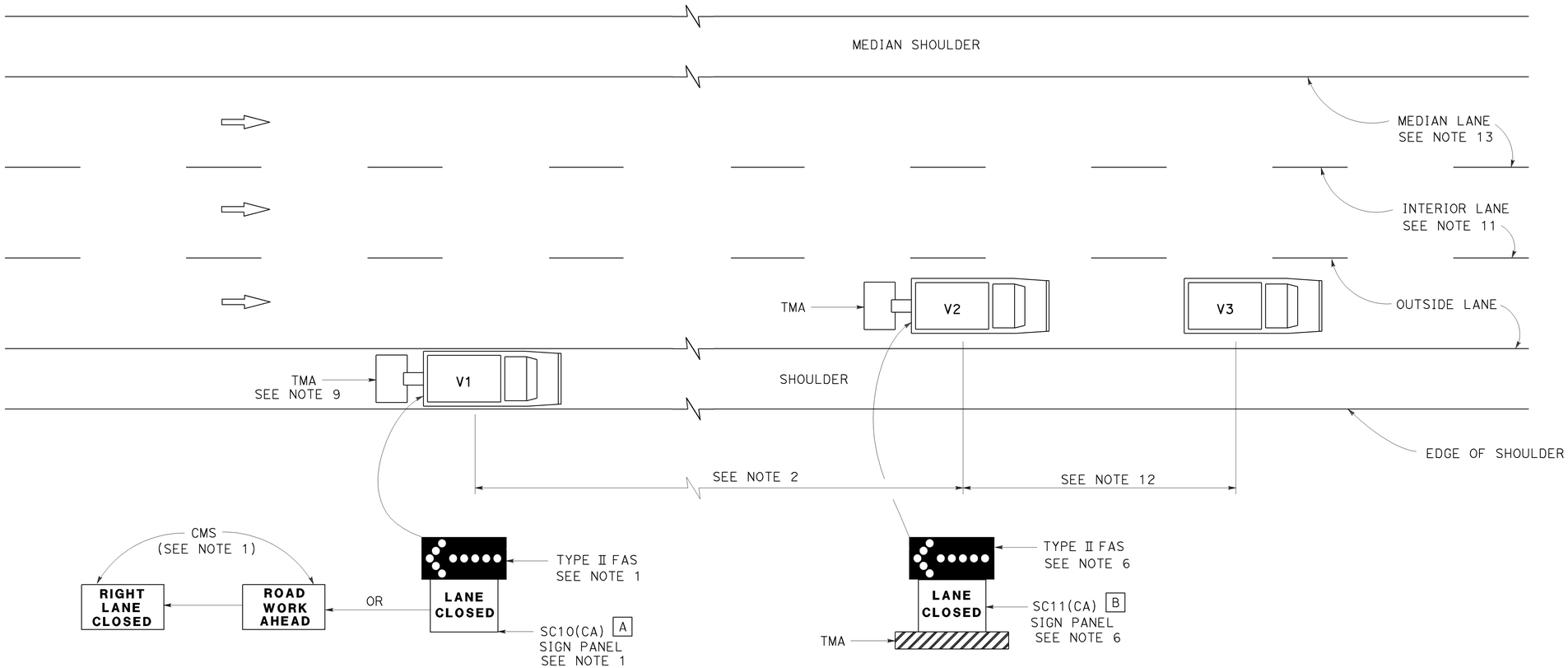

SIGN PANEL SIZE (Min)

A 66" x 36"

B 54" x 42"

LEGEND

V1	SIGN VEHICLE
V2	SHADOW VEHICLE
V3	WORK/APPLICATION VEHICLE
	FLASHING ARROW SIGN (FAS)
CMS	CHANGEABLE MESSAGE SIGN
TMA	TRUCK-MOUNTED ATTENUATOR

MOVING LANE CLOSURE ON MEDIAN LANE OR OUTSIDE LANE OF MULTILANE HIGHWAYS

NOTES:

1. Either a changeable message sign or a SC10(CA) sign panel and a Type II flashing arrow sign shall be mounted on the rear of sign vehicle V1. The changeable message sign shall be sequenced to show the "ROAD WORK AHEAD" message first, followed by the "RIGHT LANE CLOSED" message. For median lane closure, the flashing arrow symbol shall be reversed with the arrowhead on the right and the changeable message sign shall show "LEFT LANE CLOSED".
2. If traffic queues develop, sign vehicle V1 should be positioned upstream from the end of queue. Sign vehicle V1 shall be positioned where highly visible when shoulders are not available.
3. A minimum sight distance of 1500′ should be provided in advance of sign vehicle V1.
4. Sign vehicle V1 should remain at the beginning of horizontal or vertical curves until the other vehicles (V2 and V3) are far enough beyond the curve to resume the minimum sight distance of 1500′.
5. Vehicle-mounted sign panels shall have Type III or above retroreflective sheeting, black on white, or black on fluorescent orange, with 6" minimum series D letters per Caltrans sign specifications.
6. Shadow vehicle V2 shall be equipped with a truck-mounted attenuator. The sign panel shown and a Type II flashing arrow sign shall be mounted on the rear of shadow vehicle V2. For median lane closure the flashing arrow sign symbol shall be displayed with the arrowhead on the right.
7. All vehicles used for lane closures shall be equipped with two-way radios, and the vehicle operators shall maintain communication during the work or application operation.
8. All vehicles shall be equipped with flashing or rotating amber lights.
9. If sign vehicle V1 encroaches into the traffic lane due to insufficient shoulder width, sign vehicle V1 shall be equipped with a truck-mounted attenuator. Sign vehicle V1 shall stay as close to the edge of shoulder as practicable.
10. Where workers would be on foot in the work area, a stationary type lane closure (Revised Standard Plan T10, T11, etc., as applicable) shall be used instead of this plan.
11. For moving lane closure on interior lane of multilane highways, use Revised Standard Plan T16.
12. The spacing between work vehicle(s) and the shadow vehicles, and between each shadow vehicle should be minimized to deter road users from driving in between.
13. When the work/application vehicle V3 occupies the median lane, sign vehicle V1 should drive in the median shoulder and indicate left lane closed ahead.

STATE OF CALIFORNIA
DEPARTMENT OF TRANSPORTATION

TRAFFIC CONTROL SYSTEM FOR MOVING LANE CLOSURE ON MULTILANE HIGHWAYS

NO SCALE

RSP T15 DATED APRIL 19, 2013 SUPERSEDES STANDARD PLAN T15
DATED MAY 20, 2011 - PAGE 243 OF THE STANDARD PLANS BOOK DATED 2010.

REVISED STANDARD PLAN RSP T15

2010 REVISED STANDARD PLAN RSP T15

12-18-12

Dist	COUNTY	ROUTE	POST MILES TOTAL PROJECT	SHEET No.	TOTAL SHEETS
08	SBd	247	1.8/9.6	196	196

REGISTERED CIVIL ENGINEER

April 19, 2013
PLANS APPROVAL DATE

REGISTERED PROFESSIONAL ENGINEER
Gurinderpal Bhullar
No. C48815
Exp. 9-30-14
CIVIL
STATE OF CALIFORNIA

THE STATE OF CALIFORNIA OR ITS OFFICERS OR AGENTS SHALL NOT BE RESPONSIBLE FOR THE ACCURACY OR COMPLETENESS OF SCANNED COPIES OF THIS PLAN SHEET.

TO ACCOMPANY PLANS DATED 12-16-13

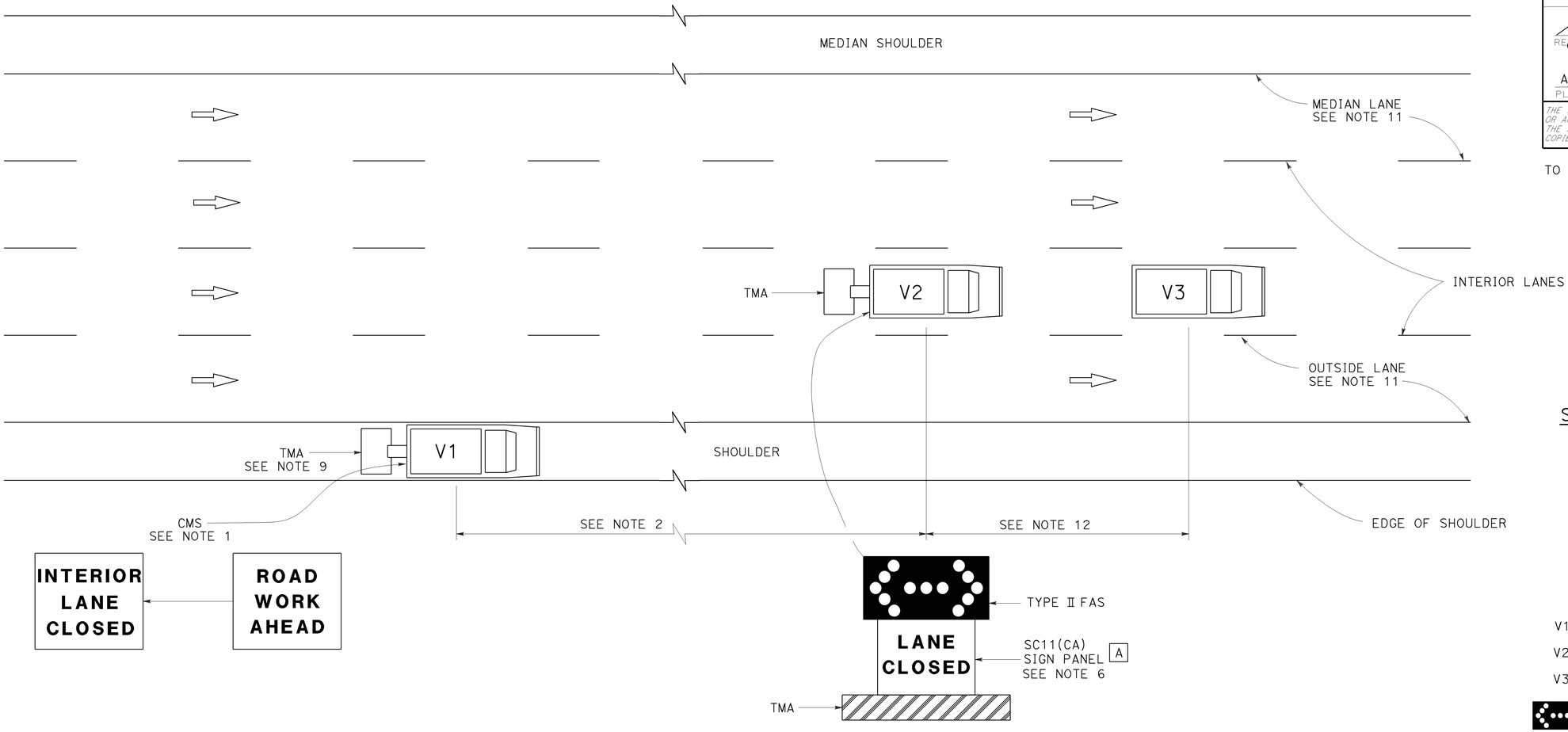

MOVING LANE CLOSURE ON INTERIOR LANE OF MULTILANE HIGHWAYS

SIGN PANEL SIZE (Min)

A 54" x 42"

LEGEND

V1	SIGN VEHICLE
V2	SHADOW VEHICLE
V3	WORK/APPLICATION VEHICLE
	FLASHING ARROW SIGN (FAS) IN FLASHING DOUBLE ARROW MODE
CMS	CHANGEABLE MESSAGE SIGN
TMA	TRUCK-MOUNTED ATTENUATOR

NOTES:

1. A changeable message sign shall be mounted on the rear of sign vehicle V1. The changeable message sign shall be sequenced to show the "ROAD WORK AHEAD" message first, followed by the "INTERIOR LANE CLOSED" message. The message "CENTER LANE CLOSED" may be used in place of the "INTERIOR LANE CLOSED" message.
2. If traffic queues develop, sign vehicle V1 should be positioned upstream from the end of queue. Sign vehicle V1 shall be positioned where highly visible when shoulders are not available.
3. A minimum sight distance of 1500′ should be provided in advance of sign vehicle V1.
4. Sign vehicle V1 should remain at the beginning of horizontal or vertical curves until the other vehicles (V2 and V3) are far enough beyond the curve to resume the minimum sight distance of 1500′.
5. Vehicle-mounted sign panels shall have Type III or above retroreflective sheeting, black on white, or black on fluorescent orange, with 6" minimum series D letters per Caltrans sign specifications.
6. Shadow vehicle V2 shall be equipped with a truck-mounted attenuator. The sign panel shown and a Type II flashing arrow sign shall be mounted on the rear of shadow vehicle V2.
7. All vehicles used for lane closures shall be equipped with two-way radios, and the vehicle operators shall maintain communication during the work or application operation.
8. All vehicles shall be equipped with flashing or rotating amber lights.
9. If sign vehicle V1 encroaches into the traffic lane due to insufficient shoulder width, sign vehicle V1 shall be equipped with a truck-mounted attenuator. Sign vehicle V1 shall stay as close to the edge of shoulder as practicable.
10. Where workers would be on foot in the work area, a stationary type lane closure (Revised Standard Plan T10, T11 etc., as applicable) shall be used instead of this plan.
11. For moving lane closure on median lane or outside lane of multilane highways, use Revised Standard Plan T15.
12. The spacing between work vehicle(s) and the shadow vehicles, and between each shadow vehicle should be minimized to deter road users from driving in between.

STATE OF CALIFORNIA
DEPARTMENT OF TRANSPORTATION

TRAFFIC CONTROL SYSTEM FOR MOVING LANE CLOSURE ON MULTILANE HIGHWAYS

NO SCALE

RSP T16 DATED APRIL 19, 2013 SUPERSEDES STANDARD PLAN T16
DATED MAY 20, 2011 - PAGE 244 OF THE STANDARD PLANS BOOK DATED 2010.

REVISED STANDARD PLAN RSP T16

2010 REVISED STANDARD PLAN RSP T16

12-18-13