Dist	COUNTY	ROUTE	POST MILES TOTAL PROJECT	SHEET No.	TOTAL SHEETS
08	SBd	15	160.9/161.5	1	53

STATE OF CALIFORNIA SARRAE-STPE-015-3(044)

DEPARTMENT OF TRANSPORTATION

PROJECT PLANS FOR CONSTRUCTION ON

STATE HIGHWAY

IN SAN BERNARDINO COUNTY ABOUT 25 MILES SOUTH OF CALIFORNIA/NEVADA STATE LINE AT THE VALLEY WELLS SAFETY ROADSIDE REST AREA

TO BE SUPPLEMENTED BY STANDARD PLANS DATED MAY 2006

INDEX OF PLANS

SHEET No.	DESCRIPTION
1	TITLE AND LOCATION MAP
2-6	LAYOUTS
7-35	CONSTRUCTION DETAILS
36	CONTOUR GRADING
37-38	UTILITY PLANS
39	CONSTRUCTION AREA SIGNS
40-41	SUMMARY OF QUANTITIES
42-43	ELECTRICAL PLANS
44-50	REVISED STANDARD PLANS

STRUCTURE PLANS

51-53	FOUNDATION DETAILS

THE STANDARD PLANS LIST APPLICABLE TO THIS CONTRACT IS INCLUDED IN THE NOTICE TO BIDDERS AND SPECIAL PROVISIONS BOOK.

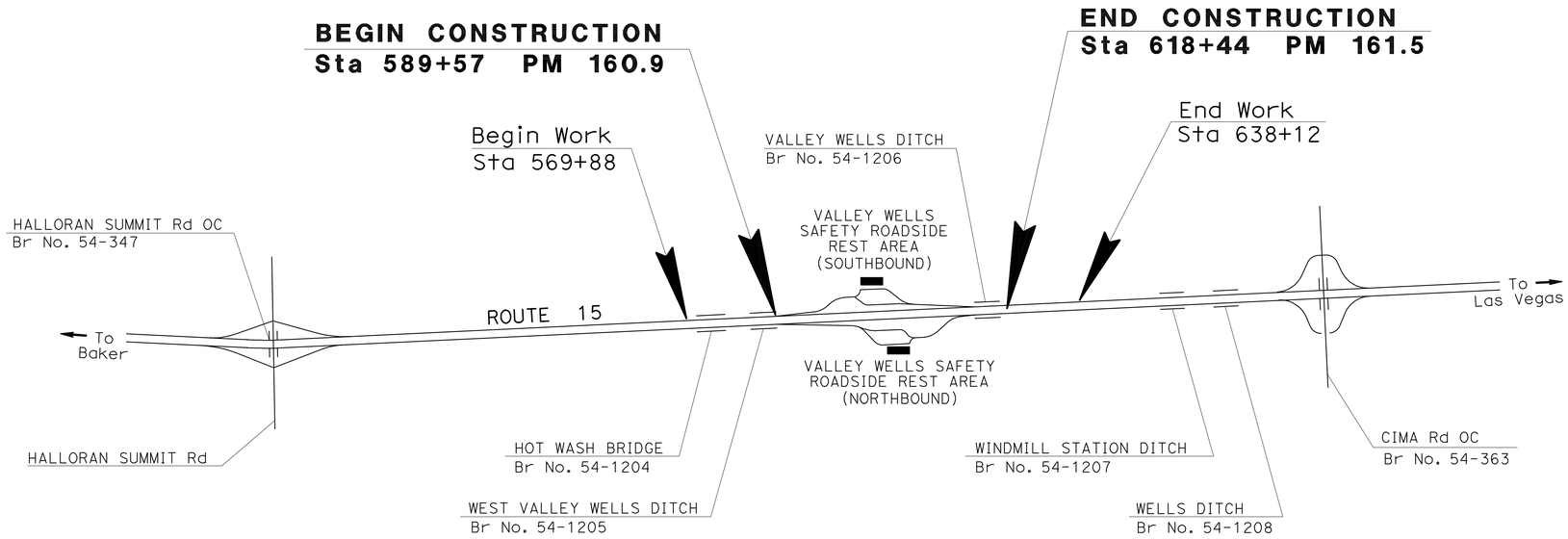

NO SCALE

Michael M Babich 2-02-10
LICENSED LANDSCAPE ARCHITECT

May 10, 2010
PLANS APPROVAL DATE

LICENSED LANDSCAPE ARCHITECT M. M. BABICH 4321 Signature 02-28-10 Renewal Date 02-01-10 Date STATE OF CALIFORNIA

THE STATE OF CALIFORNIA OR ITS OFFICERS OR AGENTS SHALL NOT BE RESPONSIBLE FOR THE ACCURACY OR COMPLETENESS OF SCANNED COPIES OF THIS PLAN SHEET.

PROJECT MANAGER JUAN LIZARDE

SENIOR LANDSCAPE ARCHITECT MICHAEL BABICH

THE CONTRACTOR SHALL POSSESS THE CLASS (OR CLASSES) OF LICENSE AS SPECIFIED IN THE "NOTICE TO BIDDERS."

CONTRACT No.	08-0A6414
PROJECT ID	0800000025

LAST REVISION 02-02-10 DATE PLOTTED => 08-SEP-2010 TIME PLOTTED => 09:24

Dist	COUNTY	ROUTE	POST MILES TOTAL PROJECT	SHEET No.	TOTAL SHEETS
08	SBd	15	160.9/161.5	2	53

Michael M. Babich 2-01-10
LICENSED LANDSCAPE ARCHITECT

5-10-10
PLANS APPROVAL DATE

LICENSED LANDSCAPE ARCHITECT M. M. BABICH 4053 Michael M. Babich Signature 02-28-10 Renewal Date 02-01-10 Date STATE OF CALIFORNIA

THE STATE OF CALIFORNIA OR ITS OFFICERS OR AGENTS SHALL NOT BE RESPONSIBLE FOR THE ACCURACY OR COMPLETENESS OF SCANNED COPIES OF THIS PLAN SHEET.

NOTES:

1. TRAIL PAVING SHALL BE 4 INCH THICK PORTLAND CEMENT SIDEWALK.
2. FOR COMPLETE RIGHT OF WAY AND ACCURATE ACCESS DATA, SEE RIGHT OF WAY RECORDS MAP AT DISTRICT OFFICE.
3. ALL SHOTCRETE AND CONCRETE SURFACES SHALL RECEIVE ANTI-GRAFFITI COATING.

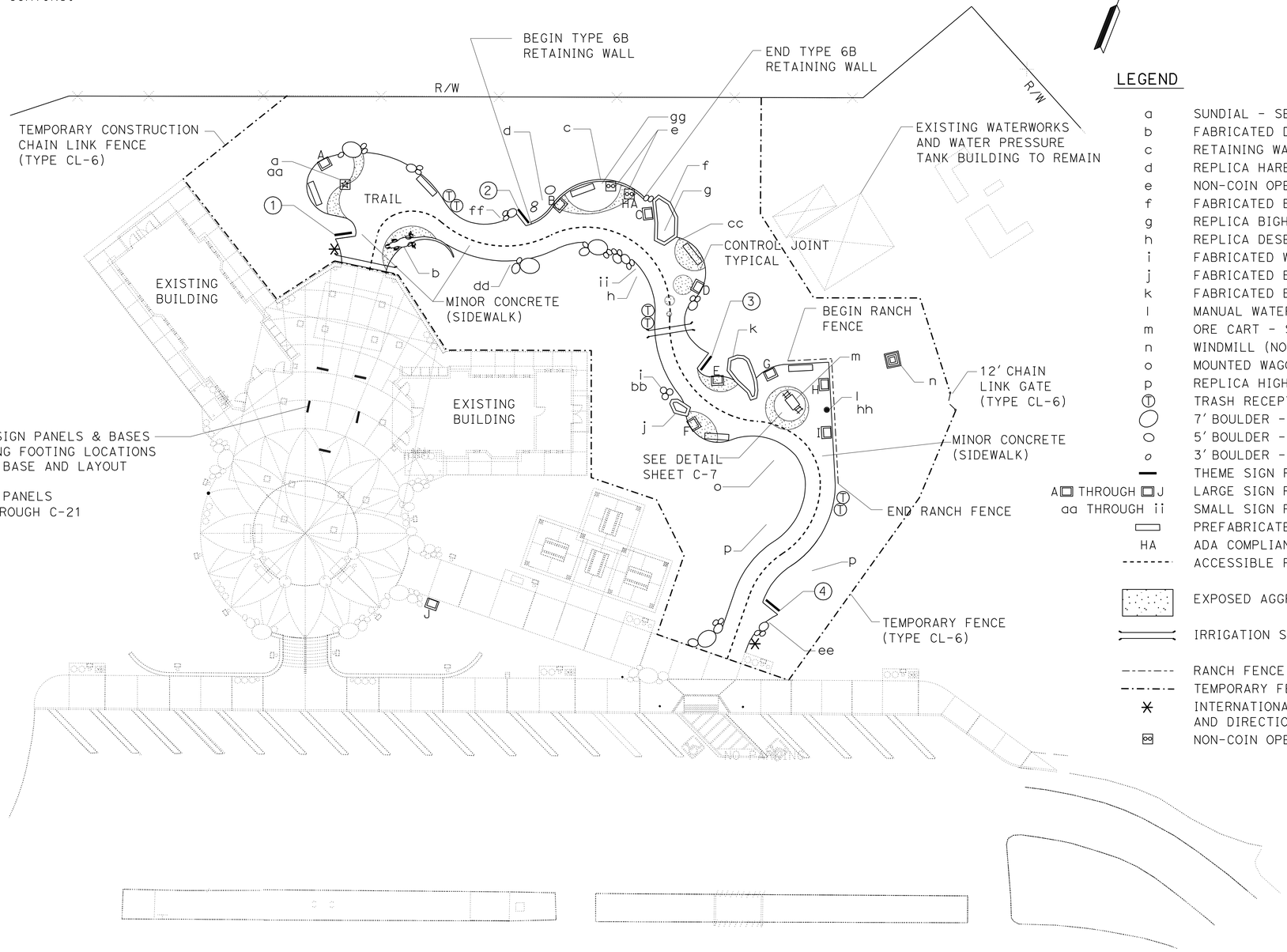

LEGEND

a	SUNDIAL - SEE SHEET C-5
b	FABRICATED DESERT IGUANA - SEE SHEET C-8
c	RETAINING WALL (TYPE 6B) - SEE SHEET C-5
d	REPLICA HARE - SEE SHEET C-9
e	NON-COIN OPERATED BINOCULARS - SEE SHEET C-10
f	FABRICATED BOULDER ① - SEE SHEET C-6
g	REPLICA BIGHORN SHEEP - SEE SHEET C-6
h	REPLICA DESERT TORTOISE- SEE SHEET C-9
i	FABRICATED WATER VESSELS (3) - SEE SHEET C-11
j	FABRICATED BOULDER ② - SEE SHEET C-6
k	FABRICATED BOULDER ③ - SEE SHEET C-6
l	MANUAL WATER PUMP (NON-FUNCTIONAL) - SEE SHEET C-11
m	ORE CART - SEE SHEET C-7
n	WINDMILL (NON-FUNCTIONAL) - SEE SHEET C-10
o	MOUNTED WAGON WHEEL - SEE SHEET C-11
p	REPLICA HIGHWAY SIGNS - SEE SHEET C-9
Ⓣ	TRASH RECEPTACLE - SEE SHEET C-10
◯	7' BOULDER - SEE SHEET C-4
○	5' BOULDER - SEE SHEET C-4
o	3' BOULDER - SEE SHEET C-4
—	THEME SIGN PANEL & BASE ① ② ③ ④ - SEE SHEET C-3
A▢ THROUGH ▢J	LARGE SIGN PANEL & BASE - SEE SHEET C-4
aa THROUGH ii	SMALL SIGN PANEL & BASE - SEE SHEET C-4 AND C-27
▭	PREFABRICATED BENCH (6) - SEE SHEET C-9
HA	ADA COMPLIANT
- - - - -	ACCESSIBLE PATH OF TRAVEL (ADA COMPLIANT)
▒	EXPOSED AGGREGATE FINISH WITH CONTROL JOINT BORDERS
═══	IRRIGATION SLEEVE
—·—·—	RANCH FENCE - SEE SHEET C-7
—··—··—	TEMPORARY FENCE (TYPE CL-6)
✳	INTERNATIONAL SYMBOL OF ACCESSIBILITY METAL SIGN AND DIRECTIONAL METAL SIGN-ONE POST - SEE SHEET C-7
▣	NON-COIN OPERATED BINOCULARS

LAYOUT
SOUTHBOUND

SCALE: 1" = 20'

L-1

STATE OF CALIFORNIA - DEPARTMENT OF TRANSPORTATION
Caltrans LANDSCAPE ARCHITECTURE
SENIOR LANDSCAPE ARCHITECT: RAY DESSELLE
CALCULATED-DESIGNED BY: MARIA I. ARIAS
CHECKED BY: MICHAEL M. BABICH
REVISED BY
DATE REVISED

LAST REVISION 02-01-10
DATE PLOTTED => 08-SEP-2010
TIME PLOTTED => 09:24

Dist	COUNTY	ROUTE	POST MILES TOTAL PROJECT	SHEET No.	TOTAL SHEETS
08	SBd	15	160.9/161.5	3	53

Michael M. Babich 2-01-10
LICENSED LANDSCAPE ARCHITECT

5-10-10
PLANS APPROVAL DATE

LICENSED LANDSCAPE ARCHITECT M. M. BABICH 4021 Signature 02-28-10 Renewal Date 02-01-10 Date STATE OF CALIFORNIA

THE STATE OF CALIFORNIA OR ITS OFFICERS OR AGENTS SHALL NOT BE RESPONSIBLE FOR THE ACCURACY OR COMPLETENESS OF SCANNED COPIES OF THIS PLAN SHEET.

NOTE:

FOR COMPLETE RIGHT OF WAY AND ACCURATE ACCESS DATA, SEE RIGHT OF WAY RECORDS MAP AT DISTRICT OFFICE.

LEGEND:

e	NON-COIN OPERATED BINOCULARS - SEE SHEET C-10
HA	ADA COMPLIANT
K☐	LARGE SIGN PANEL & BASE - SEE SHEET C-4
gg	SMALL SIGN PANEL & BASE SEE SHEET C-4 AND C-27

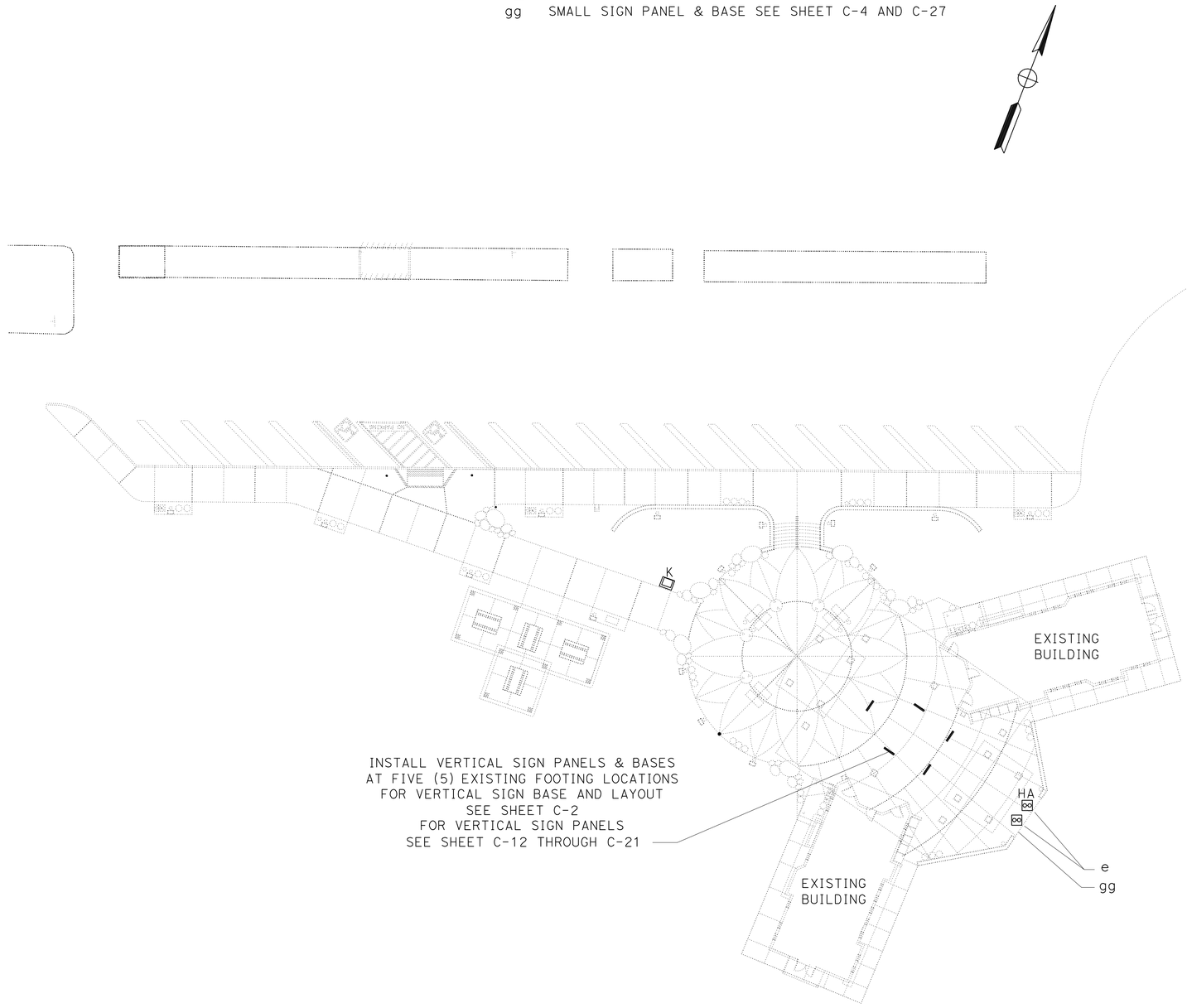

LAYOUT
NORTHBOUND

SCALE: 1" = 20'

L-2

STATE OF CALIFORNIA - DEPARTMENT OF TRANSPORTATION
Caltrans® LANDSCAPE ARCHITECTURE

SENIOR LANDSCAPE ARCHITECT: RAY DESSELLE
CALCULATED-DESIGNED BY: MARIA I. ARIAS
CHECKED BY: MICHAEL M. BABICH
REVISED BY
DATE REVISED

LAST REVISION 02-01-10
DATE PLOTTED => 08-SEP-2010
TIME PLOTTED => 09:24

Dist	COUNTY	ROUTE	POST MILES TOTAL PROJECT	SHEET No.	TOTAL SHEETS
08	SBd	15	160.9/161.5	4	53

REGISTERED CIVIL ENGINEER 2-01-10 DATE

5-10-10
PLANS APPROVAL DATE

REGISTERED PROFESSIONAL ENGINEER DUNG HUY PHAN No. C 73061 Exp. 12/30/10 CIVIL STATE OF CALIFORNIA

THE STATE OF CALIFORNIA OR ITS OFFICERS OR AGENTS SHALL NOT BE RESPONSIBLE FOR THE ACCURACY OR COMPLETENESS OF SCANNED COPIES OF THIS PLAN SHEET.

NOTE:

SECTION A-A IS SHOWN ON SHEET C-1.

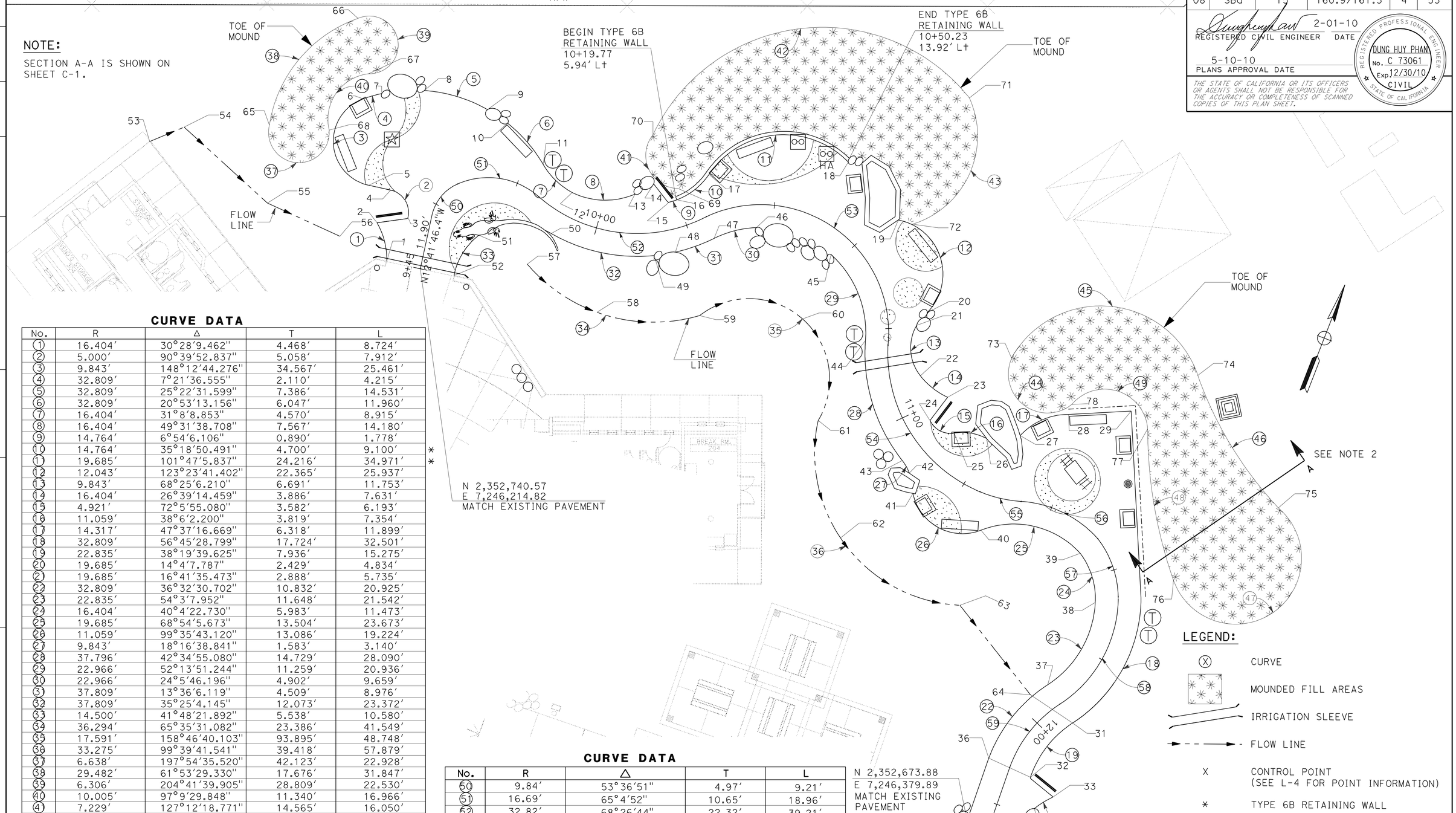

CURVE DATA

No.	R	Δ	T	L	
1	16.404′	30°28′9.462"	4.468′	8.724′	
2	5.000′	90°39′52.837"	5.058′	7.912′	
3	9.843′	148°12′44.276"	34.567′	25.461′	
4	32.809′	7°21′36.555"	2.110′	4.215′	
5	32.809′	25°22′31.599"	7.386′	14.531′	
6	32.809′	20°53′13.156"	6.047′	11.960′	
7	16.404′	31°8′8.853"	4.570′	8.915′	
8	16.404′	49°31′38.708"	7.567′	14.180′	
9	14.764′	6°54′6.106"	0.890′	1.778′	
10	14.764′	35°18′50.491"	4.700′	9.100′	*
11	19.685′	101°47′5.837"	24.216′	34.971′	*
12	12.043′	123°23′41.402"	22.365′	25.937′	
13	9.843′	68°25′6.210"	6.691′	11.753′	
14	16.404′	26°39′14.459"	3.886′	7.631′	
15	4.921′	72°5′55.080"	3.582′	6.193′	
16	11.059′	38°6′2.200"	3.819′	7.354′	
17	14.317′	47°37′16.669"	6.318′	11.899′	
18	32.809′	56°45′28.799"	17.724′	32.501′	
19	22.835′	38°19′39.625"	7.936′	15.275′	
20	19.685′	14°4′7.787"	2.429′	4.834′	
21	19.685′	16°41′35.473"	2.888′	5.735′	
22	32.809′	36°32′30.702"	10.832′	20.925′	
23	22.835′	54°3′7.952"	11.648′	21.542′	
24	16.404′	40°4′22.730"	5.983′	11.473′	
25	19.685′	68°54′5.673"	13.504′	23.673′	
26	11.059′	99°35′43.120"	13.086′	19.224′	
27	9.843′	18°16′38.841"	1.583′	3.140′	
28	37.796′	42°34′55.080"	14.729′	28.090′	
29	22.966′	52°13′51.244"	11.259′	20.936′	
30	22.966′	24°5′46.196"	4.902′	9.659′	
31	37.809′	13°36′6.119"	4.509′	8.976′	
32	37.809′	35°25′4.145"	12.073′	23.372′	
33	14.500′	41°48′21.892"	5.538′	10.580′	
34	36.294′	65°35′31.082"	23.386′	41.549′	
35	17.591′	158°46′40.103"	93.895′	48.748′	
36	33.275′	99°39′41.541"	39.418′	57.879′	
37	6.638′	197°54′35.520"	42.123′	22.928′	
38	29.482′	61°53′29.330"	17.676′	31.847′	
39	6.306′	204°41′39.905"	28.809′	22.530′	
40	10.005′	97°9′29.848"	11.340′	16.966′	
41	7.229′	127°12′18.771"	14.565′	16.050′	
42	41.034′	116°2′28.499"	65.721′	83.106′	
43	20.137′	92°48′36.728"	21.150′	32.619′	
44	8.537′	174°52′15.624"	190.600′	26.055′	
45	22.429′	134°0′36.057"	52.851′	52.459′	
46	83.159′	22°50′7.334"	16.795′	33.143′	
47	14.408′	210°2′4.024"	53.708′	52.818′	
48	99.883′	19°20′6.370"	17.015′	33.707′	
49	9.411′	135°39′54.197"	23.099′	22.284′	

CURVE DATA

No.	R	Δ	T	L
50	9.84′	53°36′51"	4.97′	9.21′
51	16.69′	65°4′52"	10.65′	18.96′
52	32.82′	68°26′44"	22.32′	39.21′
53	27.97′	120°34′33"	49.01′	58.85′
54	32.81′	70°24′24"	23.15′	40.32′
55	27.89′	19°2′19"	4.68′	9.27′
56	24.67′	44°22′12"	10.06′	19.11′
57	21.39′	36°48′36"	7.12′	13.74′
58	27.82′	56°25′46"	14.93′	27.40′
59	27.82′	37°7′19"	9.34′	18.03′

STATE OF CALIFORNIA - DEPARTMENT OF TRANSPORTATION
Caltrans DESIGN DIVISION

FUNCTIONAL SUPERVISOR: RENEE SASSE
CALCULATED-DESIGNED BY: DUNG HUY PHAN
CHECKED BY: RONNY DANG
REVISED BY
DATE REVISED

LAST REVISION 02-01-10
DATE PLOTTED => 08-SEP-2010
TIME PLOTTED => 09:24

Dist	COUNTY	ROUTE	POST MILES TOTAL PROJECT	SHEET No.	TOTAL SHEETS
08	SBd	15	160.9/161.5	5	53

REGISTERED CIVIL ENGINEER 2-01-10 DATE

5-10-10
PLANS APPROVAL DATE

REGISTERED PROFESSIONAL ENGINEER DUNG HUY PHAN No. C 73061 Exp 12/30/10 CIVIL STATE OF CALIFORNIA

THE STATE OF CALIFORNIA OR ITS OFFICERS OR AGENTS SHALL NOT BE RESPONSIBLE FOR THE ACCURACY OR COMPLETENESS OF SCANNED COPIES OF THIS PLAN SHEET.

CONSTRUCTION CONTROL POINTS
SOUTHBOUND I-15

Offset Point	Baseline Station	Offset	Elevation	Description
1	9+45.56	-7.51	3695.99	FS, JOIN
2	9+53.27	-11.36	3695.13	FS
3	9+55.83	-5.01	3695.96	FS
4	9+59.08	-10.27	3696.40	FS
5	9+58.74	-15.11	3696.40	FS
6	9+63.53	-27.13	3696.59	FS
7	9+64.59	-25.50	3696.40	FS
8	9+67.25	-21.64	3696.20	FS
9	9+73.38	-14.84	3696.00	FS
10	9+75.92	-12.18	3695.50	FS
11	9+82.65	-6.26	3695.59	FS
12	9+91.35	-5.04	3695.44	FS
13	10+08.34	-8.61	3695.18	FS
14	10+14.33	-10.54	3694.70	FS
15	10+17.59	-5.93	3694.44	FS
16	10+19.77	-5.94	3695.14	FS, MOUND
17	10+28.13	-8.39	3695.00	FS, MOUND
18	10+50.23	-13.92	3694.80	FS, MOUND
19	10+61.71	-10.88	3694.60	FS, MOUND
20	10+77.55	-8.69	3694.12	FS
21	10+79.57	-6.16	3694.07	FS
22	10+91.62	-6.64	3693.88	FS
23	11+00.26	-10.83	3693.80	FS
24	11+03.89	-5.00	3693.65	FS
25	11+10.36	-7.51	3693.60	FS
26	11+19.18	-11.05	3693.60	FS
27	11+30.87	-14.27	3693.50	FS
28	11+38.19	-20.57	3693.60	FS
29	11+44.52	-26.56	3693.60	FS
31	11+93.42	-4.98	3692.38	FS
32	12+12.00	-4.98	3692.11	FS
33	12+14.45	-11.09	3691.94	FS
34	12+18.18	-8.03	3691.90	FS
35	12+24.30	4.98	3691.98	FS
36	12+11.16	4.99	3692.33	FS
37	11+93.42	4.98	3692.60	FS
38	11+67.17	4.98	3692.97	FS
39	11+52.04	4.98	3693.20	FS
40	11+26.60	7.82	3693.25	FS
41	11+13.02	8.22	3693.42	FS
42	11+09.98	5.60	3693.69	FS
43	11+07.34	4.98	3693.78	FS
44	10+82.96	5.00	3694.23	FS
45	10+57.46	5.00	3694.59	FS
46	10+35.86	5.00	3694.94	FS
47	10+24.10	4.98	3695.10	FS
48	10+16.31	4.98	3695.42	FS
49	10+12.23	4.98	3695.55	FS
50	9+91.94	4.98	3695.73	FS
51	9+55.35	10.96	3695.32	FS
52	9+45.54	7.52	3695.80	FS, JOIN
53	9+57.72	-64.30	3697.53	FL
54	9+58.43	-57.40	3696.50	FL
55	9+52.36	-35.69	3695.50	FL
56	9+48.64	-18.67	3695.00	FL
57	9+91.07	13.42	3694.26	FL
58	10+03.28	17.96	3694.22	FL
59	10+17.63	19.72	3693.53	FL
60	10+72.02	18.34	3692.95	FL
61	10+95.13	17.41	3692.48	FL
62	11+10.06	26.26	3692.24	FL
63	11+26.83	24.84	3692.00	FL
64	11+97.08	5.47	3691.25	FL
65	9+59.67	-40.28	3696.41	FS, MOUND
66	9+65.60	-42.14	3698.00	FS, MOUND
67	9+64.63	-30.68	3697.25	FS, MOUND
68	9+60.90	-28.34	3696.50	FS, MOUND
69	10+21.15	-8.17	3696.97	FS, MOUND
70	10+18.71	-21.05	3695.00	FS, MOUND
71	10+57.29	-40.64	3693.50	FS, MOUND
72	10+63.59	-12.63	3694.20	FS, MOUND
73	10+91.11	-26.93	3693.99	FS, MOUND
74	11+47.78	-41.14	3693.32	FS, MOUND
75	11+59.13	-38.36	3691.25	FS, MOUND
76	11+63.83	-12.32	3691.88	FS, MOUND
77	11+47.03	-25.24	3693.36	FS, MOUND
78	11+38.24	-22.83	3693.93	FS, MOUND
79	12+23.04	-5.81	3691.80	FS, MOUND
80	12+28.70	-4.98	3691.66	FS
81	12+30.01	-4.98	3691.62	FS, JOIN

LEGEND:

FS FINISHED SURFACE GRADE

FL FLOW LINE

NOTE:

1. FOR CONTOUR GRADING SEE SHEET G-1

LAYOUT
CONTROL POINT DATA

L-4

REVISED BY | DATE REVISED

DUNG HUY PHAN | RONNY DANG

CALCULATED-DESIGNED BY | CHECKED BY

FUNCTIONAL SUPERVISOR: RENEE SASSE

STATE OF CALIFORNIA - DEPARTMENT OF TRANSPORTATION
Caltrans DESIGN DIVISION

LAST REVISION 02-01-10 | DATE PLOTTED => 08-SEP-2010 | TIME PLOTTED => 09:24

Dist	COUNTY	ROUTE	POST MILES TOTAL PROJECT	SHEET No.	TOTAL SHEETS
08	SBd	15	160.9/161.5	6	53

Michael M. Babich 2-01-10
LICENSED LANDSCAPE ARCHITECT

5-10-10
PLANS APPROVAL DATE

LICENSED LANDSCAPE ARCHITECT M. M. BABICH 4021 Signature 02-28-10 Renewal Date 02-01-10 Date STATE OF CALIFORNIA

THE STATE OF CALIFORNIA OR ITS OFFICERS OR AGENTS SHALL NOT BE RESPONSIBLE FOR THE ACCURACY OR COMPLETENESS OF SCANNED COPIES OF THIS PLAN SHEET.

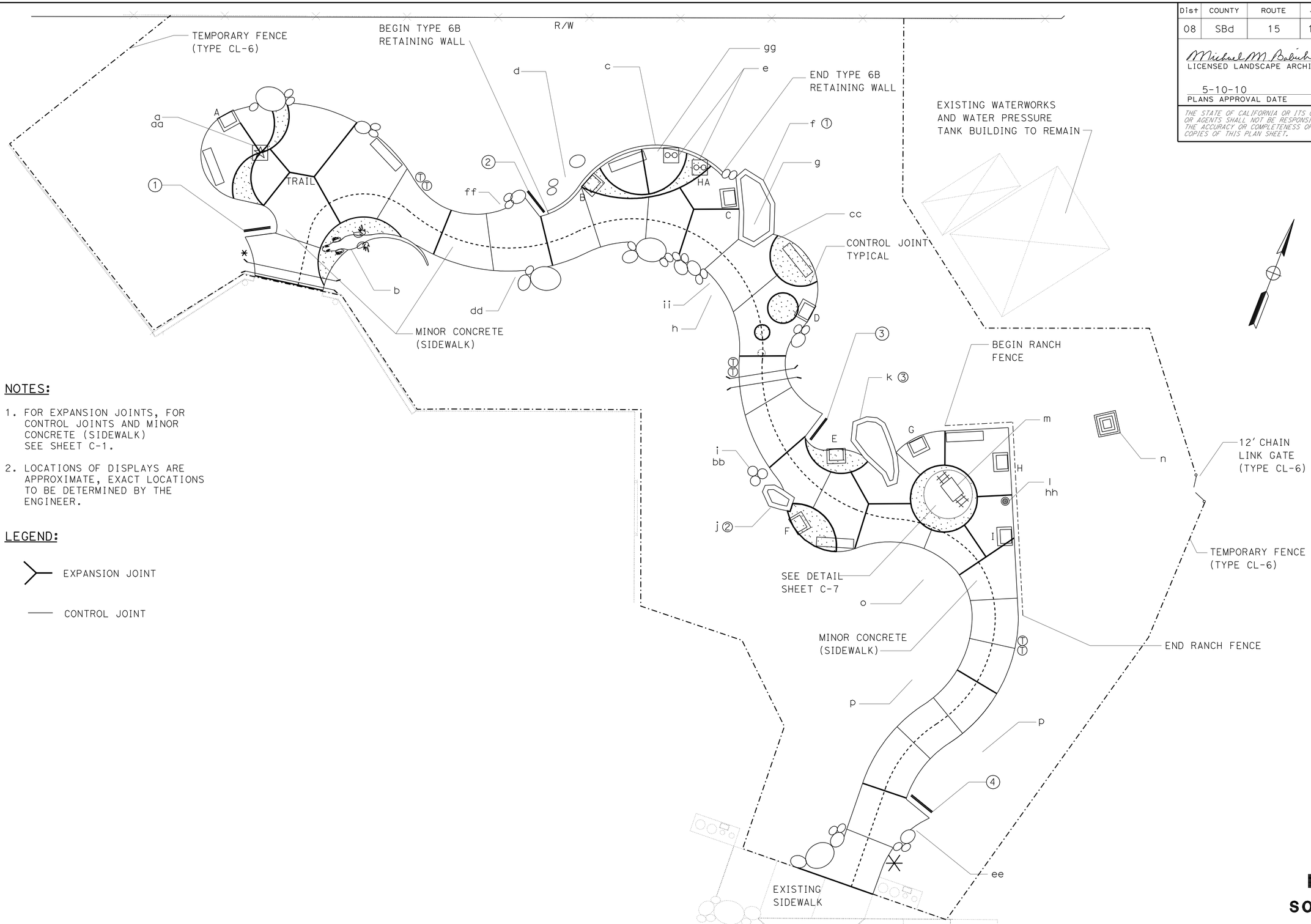

NOTES:

1. FOR EXPANSION JOINTS, FOR CONTROL JOINTS AND MINOR CONCRETE (SIDEWALK) SEE SHEET C-1.
2. LOCATIONS OF DISPLAYS ARE APPROXIMATE, EXACT LOCATIONS TO BE DETERMINED BY THE ENGINEER.

LEGEND:

EXPANSION JOINT

CONTROL JOINT

THIS PLAN IS ACCURATE FOR LAYOUT OF INTERPRETIVE ITEMS ONLY
FOR LAYOUT OF SIDEWALK SEE SHEET L-3 AND L-4

LAYOUT
SOUTHBOUND

SCALE: 1" = 10'

L-5

REVISED BY	DATE REVISED

CALCULATED-DESIGNED BY: MARIA I. ARIAS
CHECKED BY: MICHAEL M. BABICH
SENIOR LANDSCAPE ARCHITECT: RAY DESSELLE

STATE OF CALIFORNIA - DEPARTMENT OF TRANSPORTATION
Caltrans® LANDSCAPE ARCHITECTURE

LAST REVISION 02-01-10
DATE PLOTTED => 08-SEP-2010
TIME PLOTTED => 09:24

Dist	COUNTY	ROUTE	POST MILES TOTAL PROJECT	SHEET No.	TOTAL SHEETS
08	SBd	15	160.9/161.5	7	53

Michael M. Babich 2-01-10
LICENSED LANDSCAPE ARCHITECT

5-10-10
PLANS APPROVAL DATE

LICENSED LANDSCAPE ARCHITECT M. M. BABICH 4023 Signature 02-28-10 Renewal Date 02-01-10 Date STATE OF CALIFORNIA

THE STATE OF CALIFORNIA OR ITS OFFICERS OR AGENTS SHALL NOT BE RESPONSIBLE FOR THE ACCURACY OR COMPLETENESS OF SCANNED COPIES OF THIS PLAN SHEET.

NOTES:

1. SEE SHEET G-1 FOR COMPLETE CONTOUR GRADING INFORMATION.
2. MOUND SECTION A-A AND SLOPE ROUNDING DETAIL APPLY TO ALL MOUNDS.

LEGEND

#	VERTICAL SIGN BASE
A B	VERTICAL SIGN PANELS
FG	FINISHED GRADE
FS	FINISHED SURFACE
AS	CLASS 2 AGGREGRATE SUBBASE
R	RADIUS

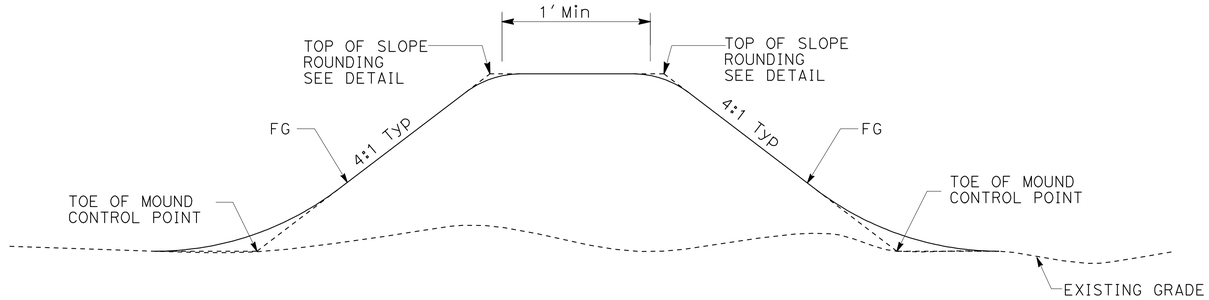

MOUND SECTION A-A

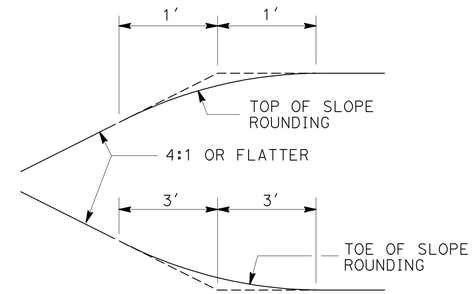

SLOPE ROUNDING DETAIL (TYPICAL)

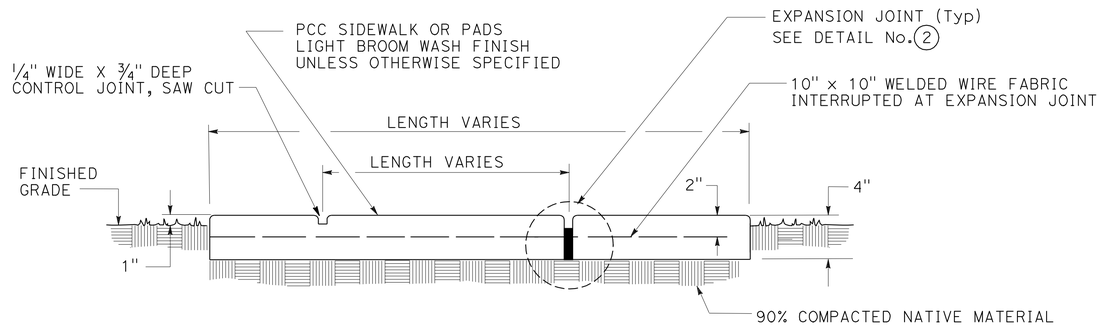

TYPICAL SECTION

1 EXPANSION JOINT AND CONTROL JOINT FOR MINOR CONCRETE (SIDEWALK)

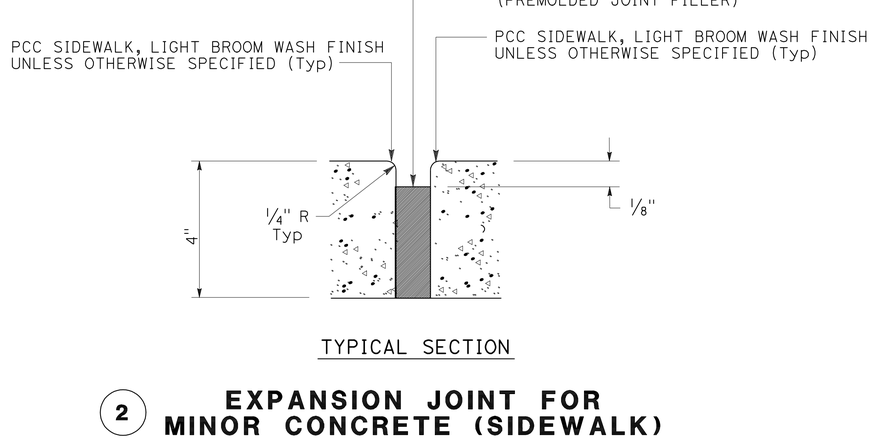

TYPICAL SECTION

2 EXPANSION JOINT FOR MINOR CONCRETE (SIDEWALK)

CONSTRUCTION DETAILS
CONTROL POINTS
NO SCALE

C-1

STATE OF CALIFORNIA - DEPARTMENT OF TRANSPORTATION
Caltrans LANDSCAPE ARCHITECTURE
SENIOR LANDSCAPE ARCHITECT: RAY DESSELLE
CALCULATED-DESIGNED BY: MARIA I. ARIAS
CHECKED BY: MICHAEL M. BABICH
REVISED BY / DATE REVISED

LAST REVISION 02-01-10
DATE PLOTTED => 08-SEP-2010
TIME PLOTTED => 09:24

Dist	COUNTY	ROUTE	POST MILES TOTAL PROJECT	SHEET No.	TOTAL SHEETS
08	SBd	15	160.9/161.5	8	53

Michael M. Babich 4-27-10
LICENSED LANDSCAPE ARCHITECT

5-10-10
PLANS APPROVAL DATE

LICENSED LANDSCAPE ARCHITECT M. M. BABICH 4-27-10 Michael M. Babich Signature 02-28-12 Renewal Date 04-27-10 Date STATE OF CALIFORNIA

THE STATE OF CALIFORNIA OR ITS OFFICERS OR AGENTS SHALL NOT BE RESPONSIBLE FOR THE ACCURACY OR COMPLETENESS OF SCANNED COPIES OF THIS PLAN SHEET.

PLAN

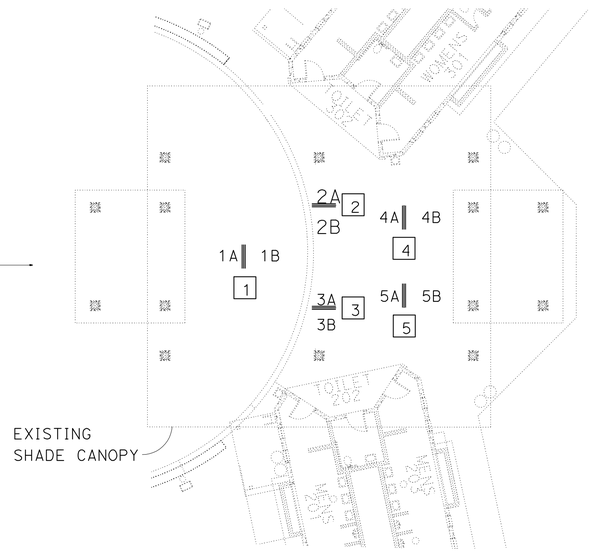

VERTICAL SIGN BASE LAYOUT (NB AND SB)

FOR VERTICAL SIGN PANEL SEE SHEETS C-12 THROUGH C-21

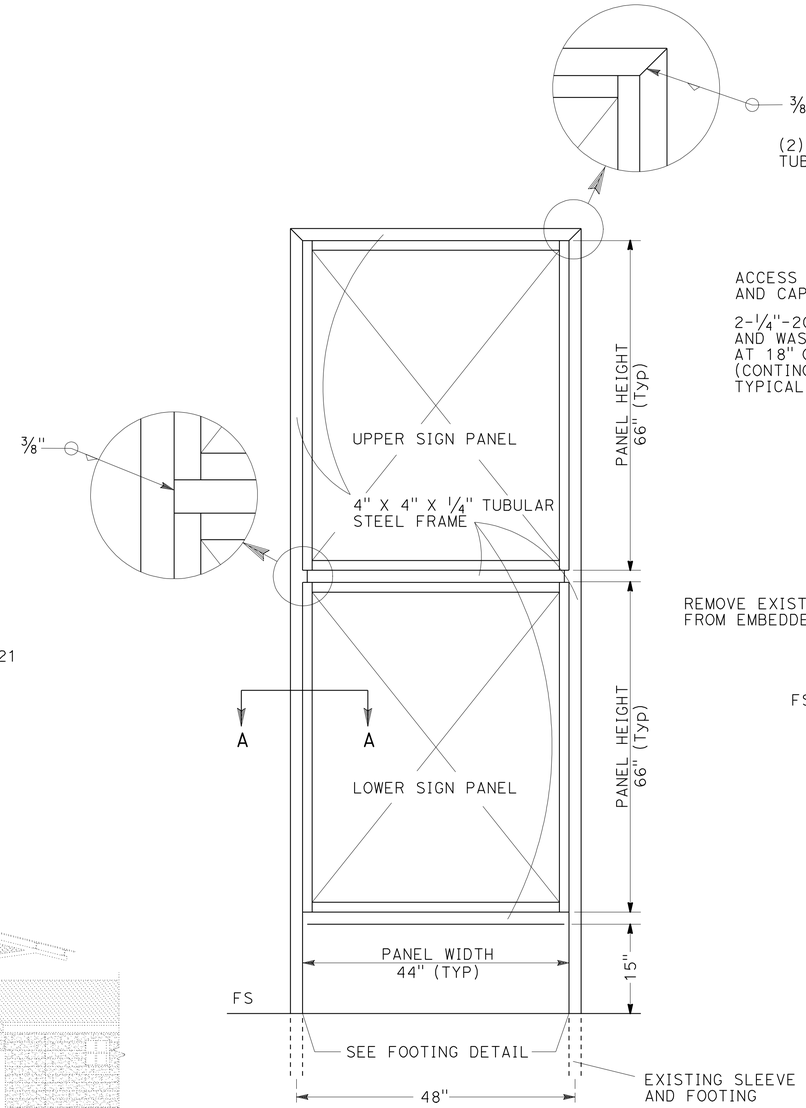

ELEVATION

VERTICAL SIGN BASE

NOTE: CONTRACTOR SHALL FIELD VERIFY SPACING OF THE EXISTING FOOTING PRIOR TO FABRICATING VERTICLE SIGN PANELS.

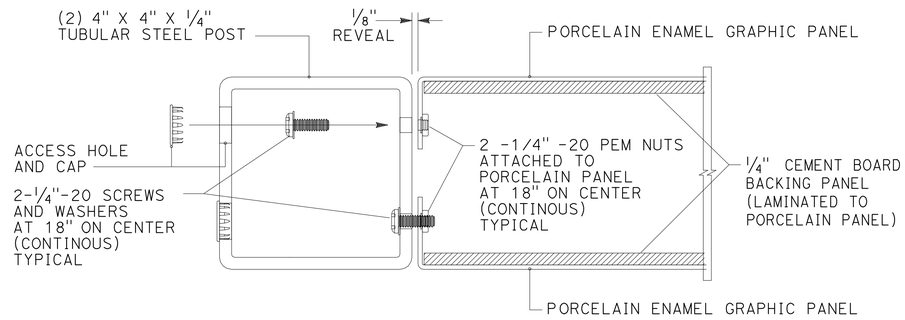

SECTION A-A

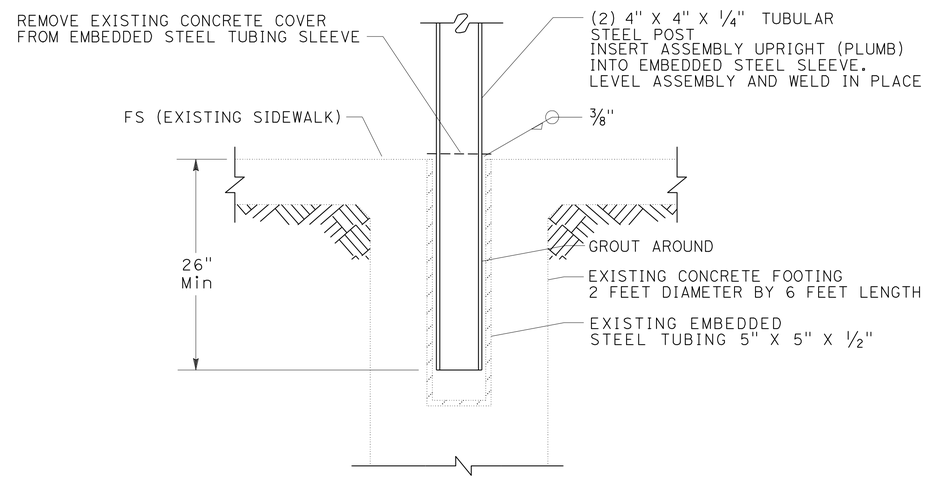

FOOTING DETAIL

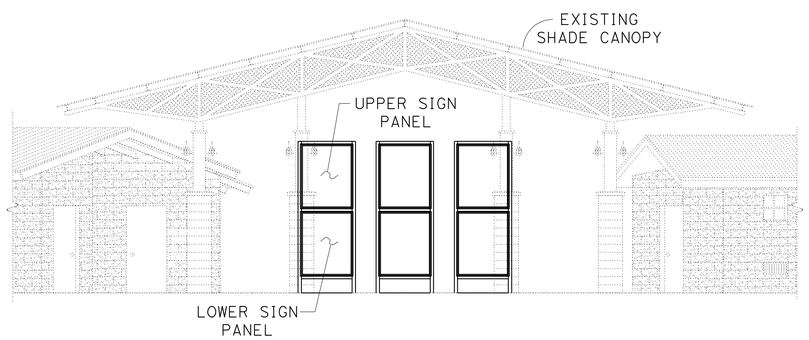

FRONT ELEVATION

CONSTRUCTION DETAILS
VERTICAL SIGN BASE AND LAYOUT

NO SCALE

C-2

STATE OF CALIFORNIA - DEPARTMENT OF TRANSPORTATION
Caltrans® LANDSCAPE ARCHITECTURE

SENIOR LANDSCAPE ARCHITECT: MICHAEL BABICH
CALCULATED-DESIGNED BY: MARIA I. ARIAS
CHECKED BY: MICHAEL M. BABICH
REVISED BY
DATE REVISED

LAST REVISION 04-27-10
DATE PLOTTED => 08-SEP-2010
TIME PLOTTED => 09:24

Dist	COUNTY	ROUTE	POST MILES TOTAL PROJECT	SHEET No.	TOTAL SHEETS
08	SBd	15	160.9/161.5	9	53

Michael M. Babich 2-01-10
LICENSED LANDSCAPE ARCHITECT

5-10-10
PLANS APPROVAL DATE

LICENSED LANDSCAPE ARCHITECT M. M. BABICH 4021 Signature 02-28-10 Renewal Date 02-01-10 Date STATE OF CALIFORNIA

THE STATE OF CALIFORNIA OR ITS OFFICERS OR AGENTS SHALL NOT BE RESPONSIBLE FOR THE ACCURACY OR COMPLETENESS OF SCANNED COPIES OF THIS PLAN SHEET.

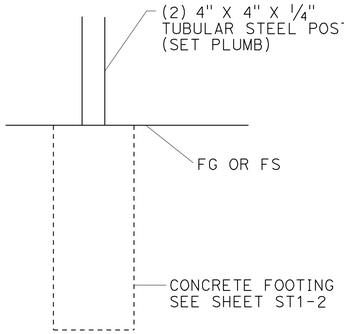

FOOTING

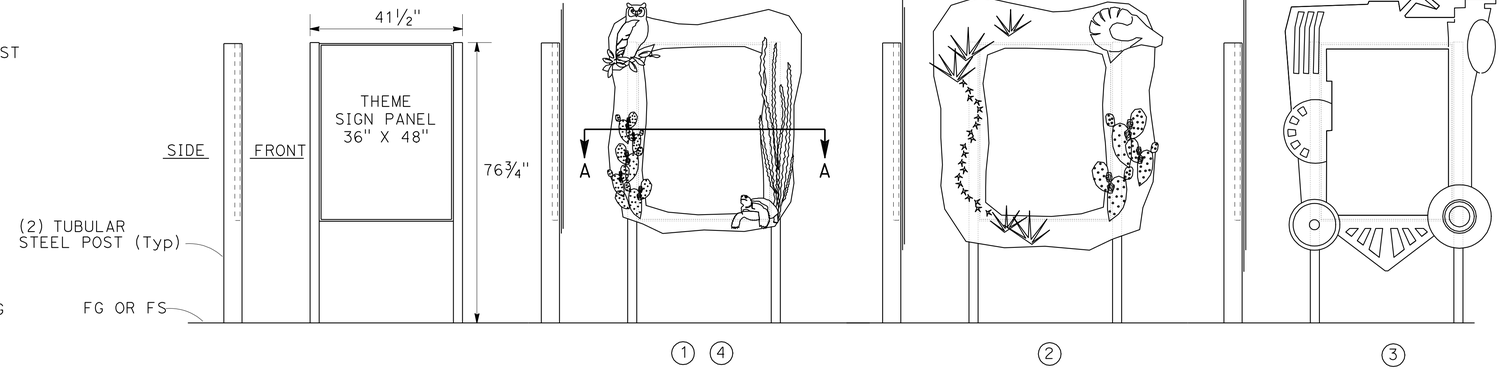

THEME SIGN BASE

ELEVATION

NOTE:

1. LAYERED ELEMENTS SHALL BE TACK WELDED INCONSPICUOUSLY AT MINIMUM 4 LOCATIONS EACH @ MAXIMUM 4 INCHES ON CENTER.

LEGEND

OPEN

(#) LOCATION AND THEME SIGN PANEL No.

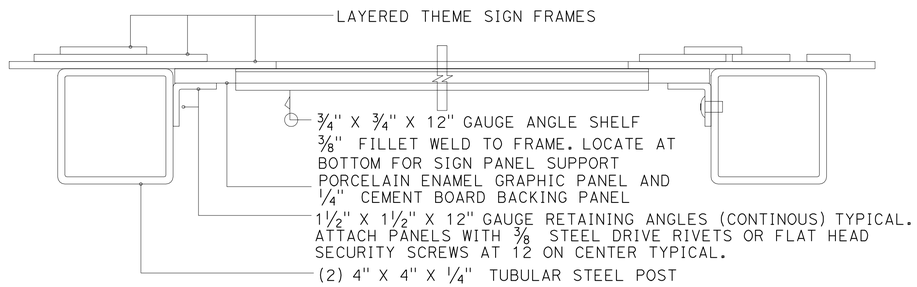

SECTION A-A

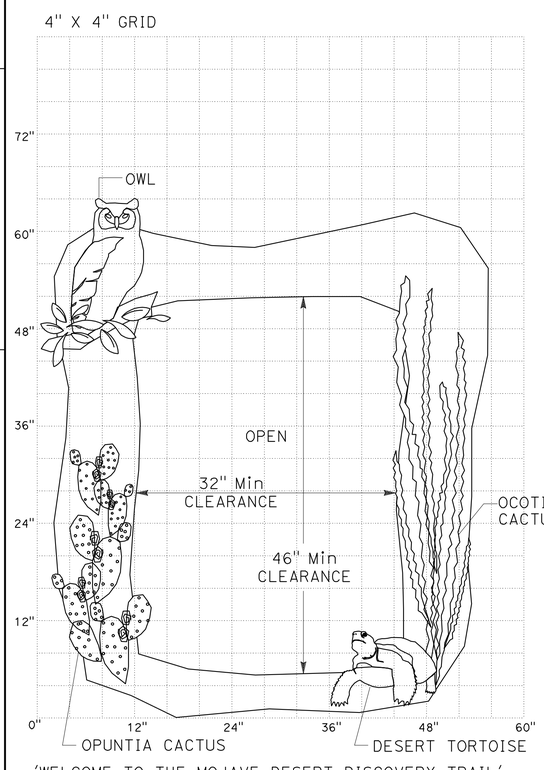

'WELCOME TO THE MOJAVE DESERT DISCOVERY TRAIL'
(2 FRAMES)
FOR THEME SIGN PANEL SEE SHEET C-22

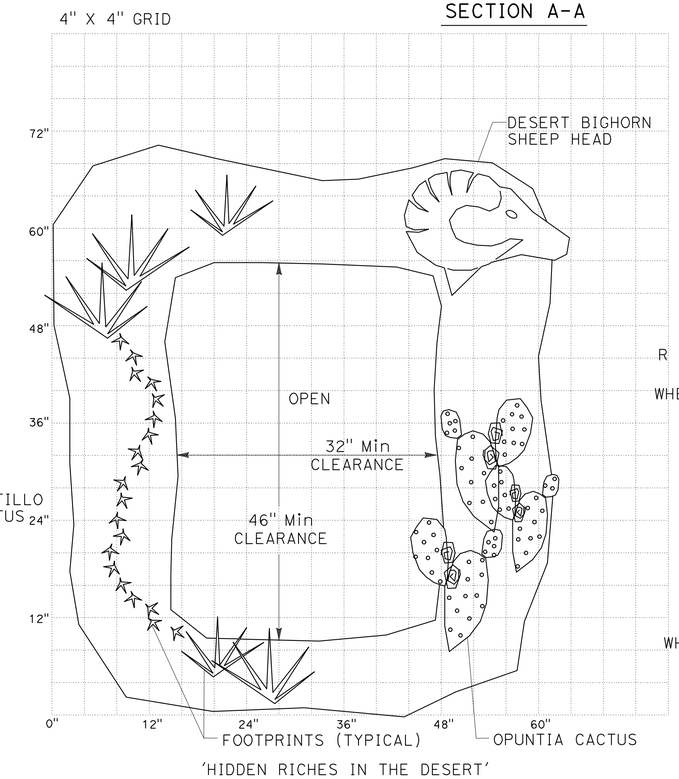

'HIDDEN RICHES IN THE DESERT'
FOR THEME SIGN PANEL SEE SHEET C-23

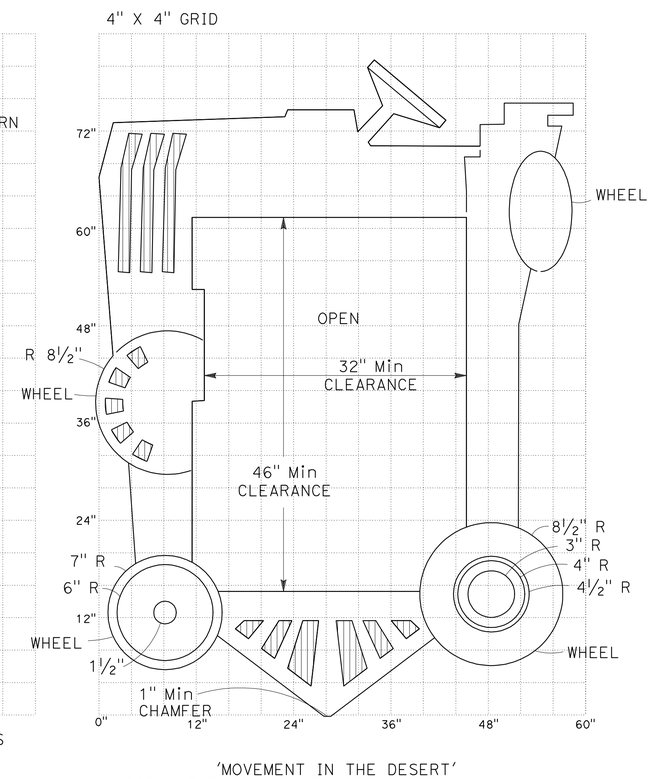

'MOVEMENT IN THE DESERT'
FOR THEME SIGN PANEL SEE SHEET C-25

THEME SIGN FRAME DETAIL
THEME SIGN BASE

CONSTRUCTION DETAILS
THEME SIGN BASE
NO SCALE

C-3

STATE OF CALIFORNIA - DEPARTMENT OF TRANSPORTATION
Caltrans® LANDSCAPE ARCHITECTURE
SENIOR LANDSCAPE ARCHITECT: RAY DESSELLE
CALCULATED-DESIGNED BY: MARIA I. ARIAS
CHECKED BY: MICHAEL M. BABICH
REVISED BY / DATE REVISED

LAST REVISION 02-01-10 | DATE PLOTTED => 08-SEP-2010 | TIME PLOTTED => 09:24

Dist	COUNTY	ROUTE	POST MILES TOTAL PROJECT	SHEET No.	TOTAL SHEETS
08	SBd	15	160.9/161.5	10	53

Michael M. Babich 2-01-10
LICENSED LANDSCAPE ARCHITECT

5-10-10
PLANS APPROVAL DATE

LICENSED LANDSCAPE ARCHITECT M. M. BABICH 4021 Signature 02-28-10 Renewal Date 02-01-10 Date STATE OF CALIFORNIA

THE STATE OF CALIFORNIA OR ITS OFFICERS OR AGENTS SHALL NOT BE RESPONSIBLE FOR THE ACCURACY OR COMPLETENESS OF SCANNED COPIES OF THIS PLAN SHEET.

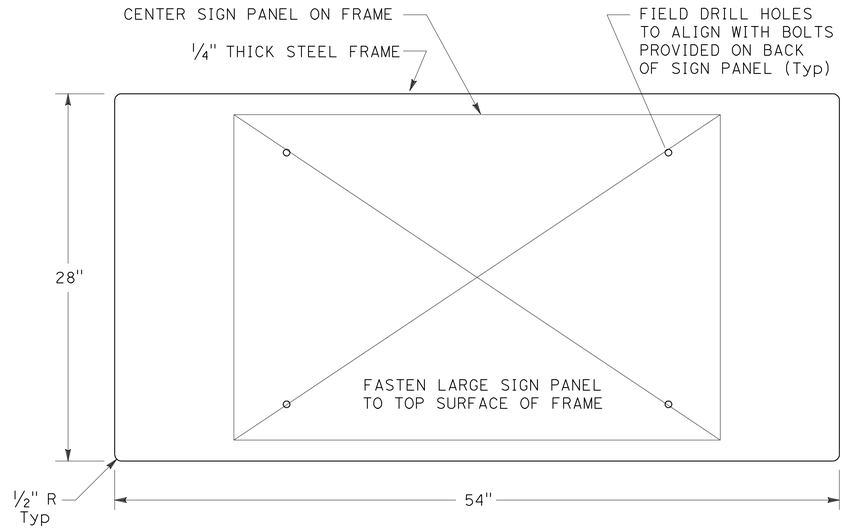

LARGE SIGN FRAME

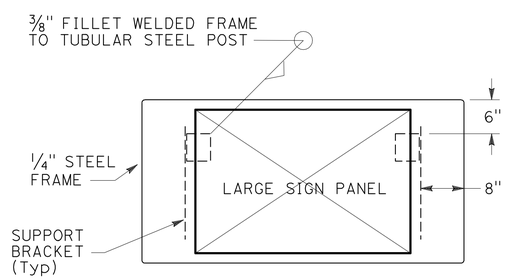

TOP VIEW

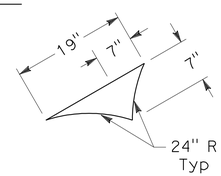

1/4" THICK STEEL
SUPPORT BRACKETS DETAIL

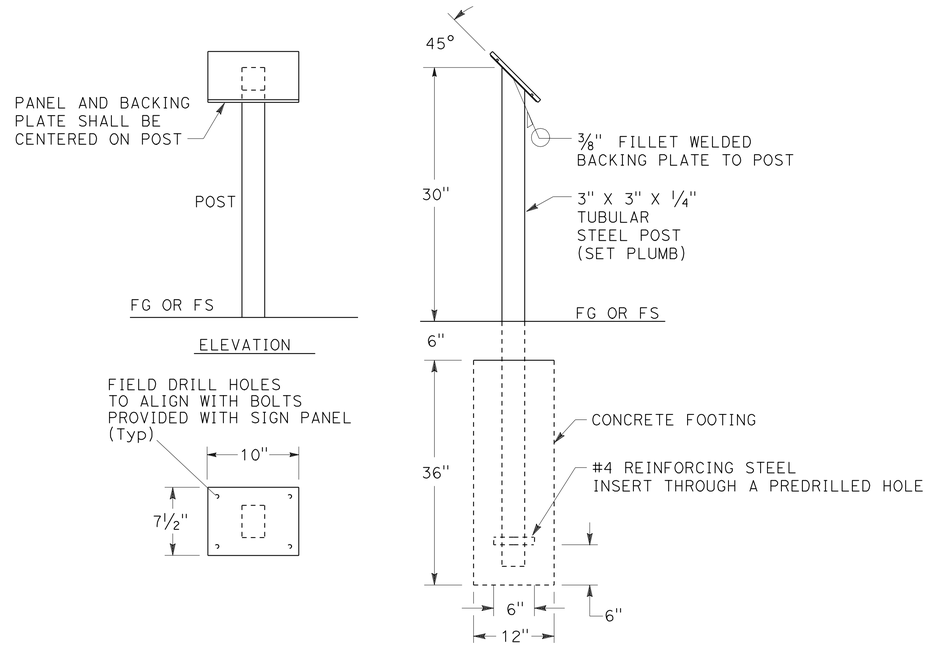

BACKING PLATE VIEW

SIDE

SMALL SIGN BASE

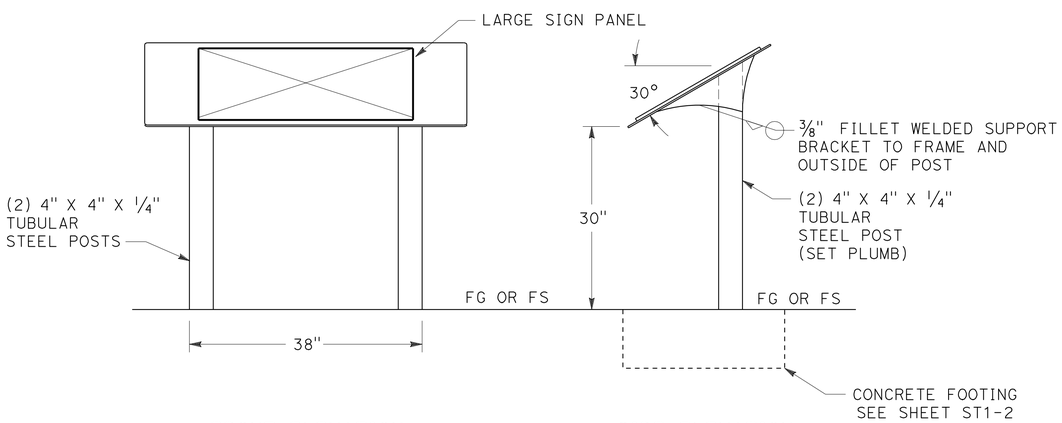

FRONT ELEVATION

SIDE ELEVATION

LARGE SIGN BASE

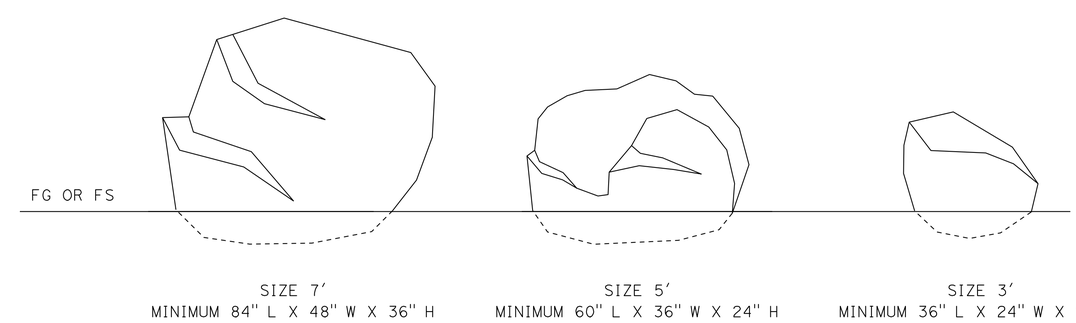

BOULDERS

CONSTRUCTION DETAILS
SIGN BASES AND BOULDERS

NO SCALE

C-4

STATE OF CALIFORNIA - DEPARTMENT OF TRANSPORTATION
Caltrans® LANDSCAPE ARCHITECTURE

SENIOR LANDSCAPE ARCHITECT: RAY DESSELLE
CALCULATED-DESIGNED BY: MARIA I. ARIAS
CHECKED BY: MICHAEL M. BABICH
REVISED BY
DATE REVISED

LAST REVISION 02-01-10
DATE PLOTTED => 08-SEP-2010
TIME PLOTTED => 09:24

Dist	COUNTY	ROUTE	POST MILES TOTAL PROJECT	SHEET No.	TOTAL SHEETS
08	SBd	15	160.9/161.5	11	53

Michael M. Babich 2-01-10
LICENSED LANDSCAPE ARCHITECT

5-10-10
PLANS APPROVAL DATE

LICENSED LANDSCAPE ARCHITECT M. M. BABICH 4053 STATE OF CALIFORNIA
Signature 02-28-10 Renewal Date 02-01-10 Date

THE STATE OF CALIFORNIA OR ITS OFFICERS OR AGENTS SHALL NOT BE RESPONSIBLE FOR THE ACCURACY OR COMPLETENESS OF SCANNED COPIES OF THIS PLAN SHEET.

NOTES:

1. FOR RETAINING WALL (TYPE 6B) SEE STANDARD PLAN B3-11.
2. PERSON SHOWN FOR SCALE REFERENCE ONLY (Typ).
3. MASONRY UNITS SHALL BE 8" X 8" X 16" IN SIZE.
4. ELEVATION VARIES SEE CONTOUR GRADING PLAN SHEET G-1.
5. SEE SHEET C-29 FOR SHOTCRETE REINFORCEMENT.

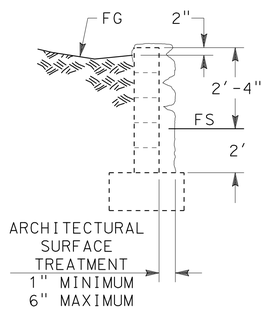

SECTION A-A
NO SCALE

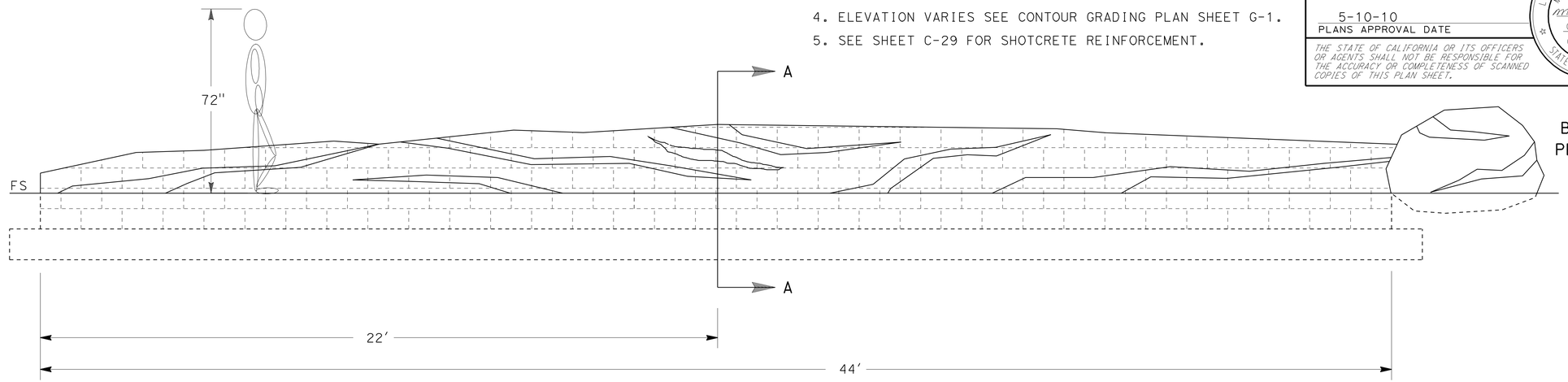

ELEVATION

TYPE 6B RETAINING WALL

SCALE: 1" = 20'

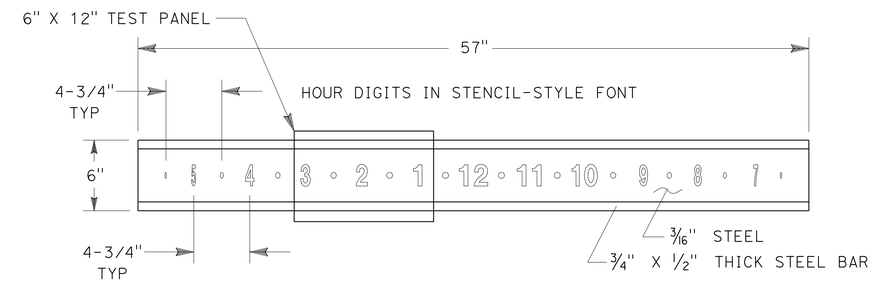

HOUR RING (SHOWN FLATTENED)
NO SCALE

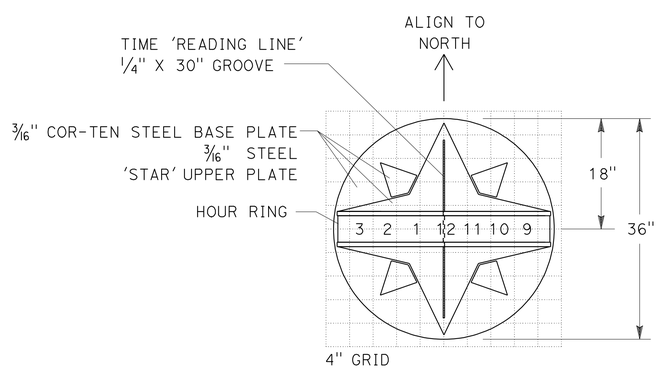

TOP

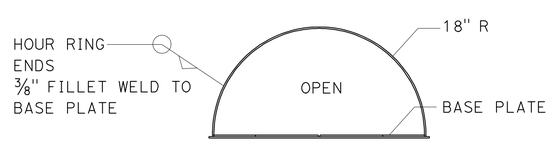

SIDE VIEW THROUGH RING

NOTE:

1. CUT OUT DIGITS AND INTERMEDIATE HOLES AS SHOWN ON HOUR RING.

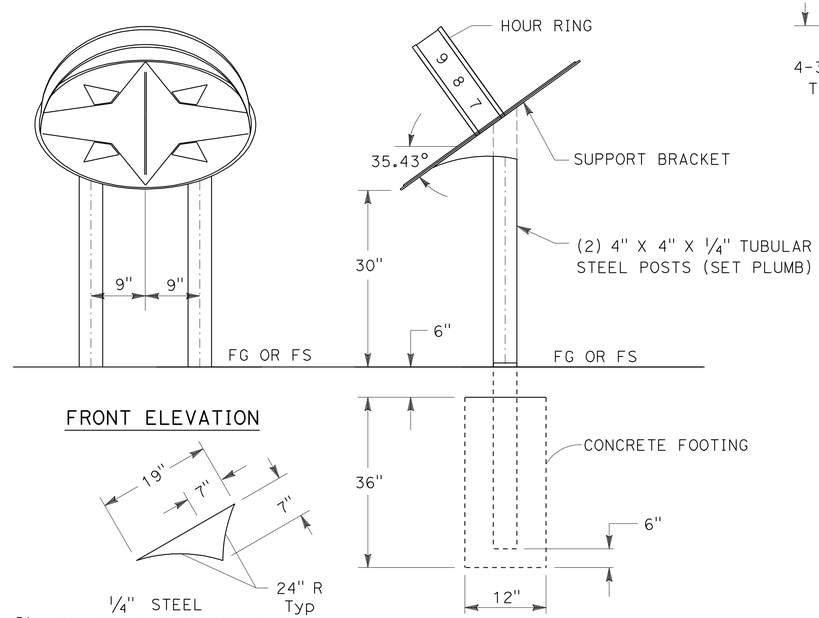

FRONT ELEVATION

SIDE ELEVATION

1/4" STEEL
3/8" FILLET WELD TO FRAME & OUTSIDE OF POSTS

SUPPORT BRACKETS

SUNDIAL

NO SCALE

CONSTRUCTION DETAILS

TYPE 6B RETAINING WALL AND SUNDIAL

SCALE AS SHOWN

C-5

STATE OF CALIFORNIA - DEPARTMENT OF TRANSPORTATION
Caltrans® LANDSCAPE ARCHITECTURE

SENIOR LANDSCAPE ARCHITECT: RAY DESSELLE

CALCULATED-DESIGNED BY: MARIA I. ARIAS
CHECKED BY: MICHAEL M. BABICH

REVISED BY / DATE REVISED

LAST REVISION 02-01-10
DATE PLOTTED => 08-SEP-2010
TIME PLOTTED => 09:24

Dist	COUNTY	ROUTE	POST MILES TOTAL PROJECT	SHEET No.	TOTAL SHEETS
08	SBd	15	160.9/161.5	12	53

Michael M. Babich 4-27-10
LICENSED LANDSCAPE ARCHITECT

5-10-10
PLANS APPROVAL DATE

LICENSED LANDSCAPE ARCHITECT M. M. BABICH 4-27-10 Signature 02-28-12 Renewal Date 04-27-10 Date STATE OF CALIFORNIA

THE STATE OF CALIFORNIA OR ITS OFFICERS OR AGENTS SHALL NOT BE RESPONSIBLE FOR THE ACCURACY OR COMPLETENESS OF SCANNED COPIES OF THIS PLAN SHEET.

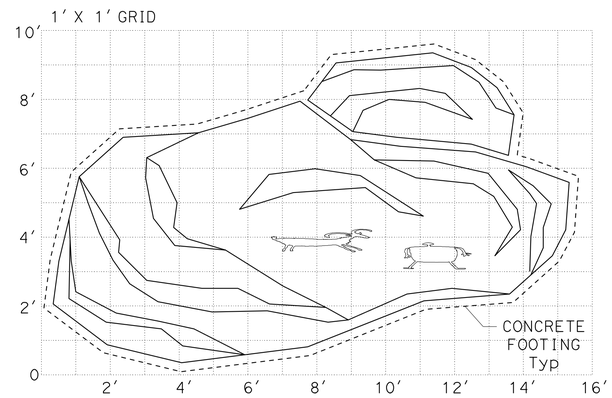

TOP VIEW

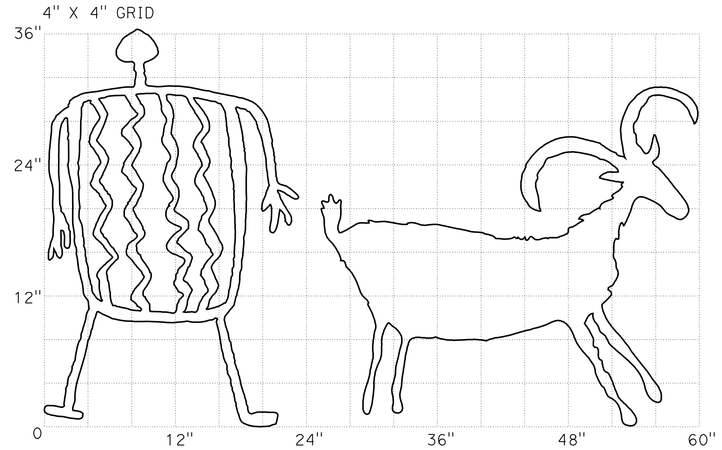

PETROGLYPHS

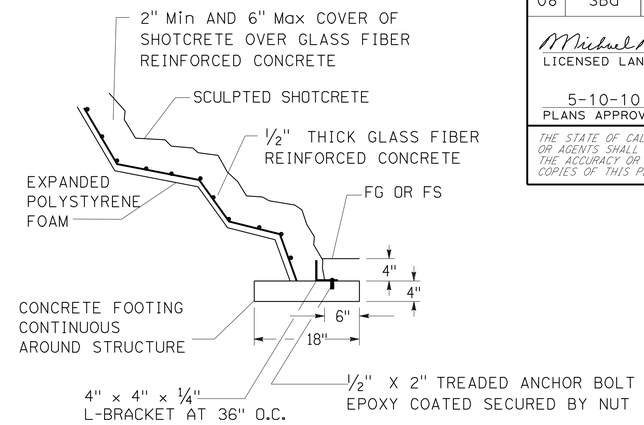

TYPICAL SECTION

NOTES:

1. (#) BOULDER LOCATION No. - SEE SHEET L-1.
2. PERSON SHOWN FOR SCALE REFERENCE ONLY (Typ).

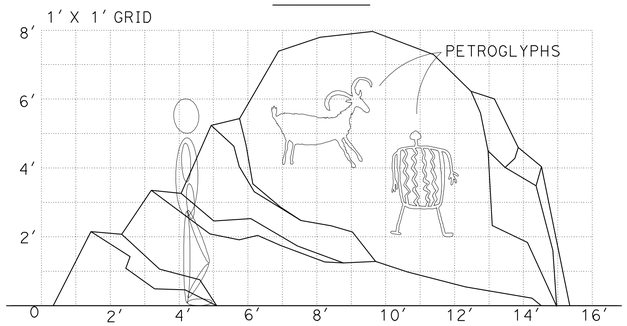

FRONT ELEVATION

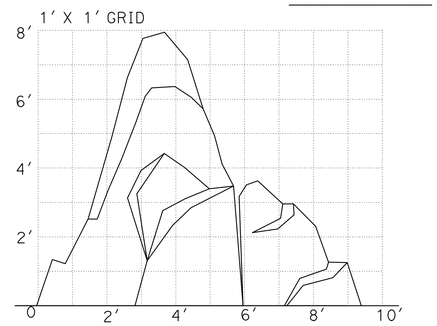

SIDE ELEVATION

3

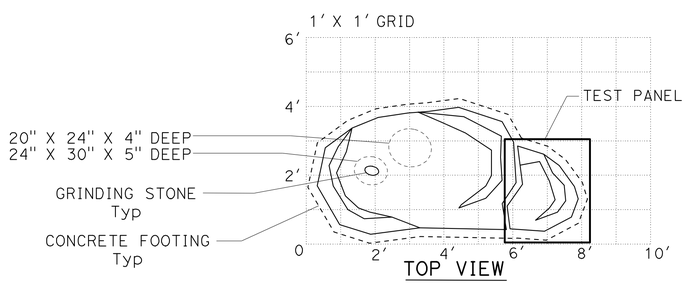

TOP VIEW

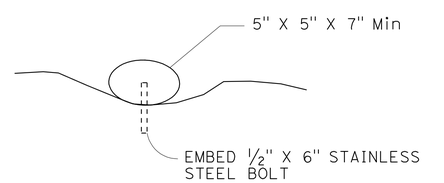

GRINDING STONE & DEPRESSION

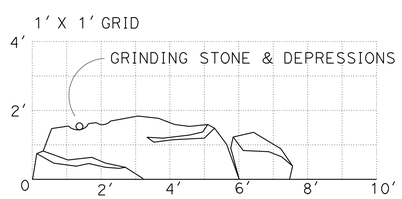

FRONT ELEVATION

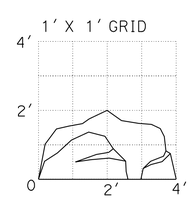

SIDE ELEVATION

2

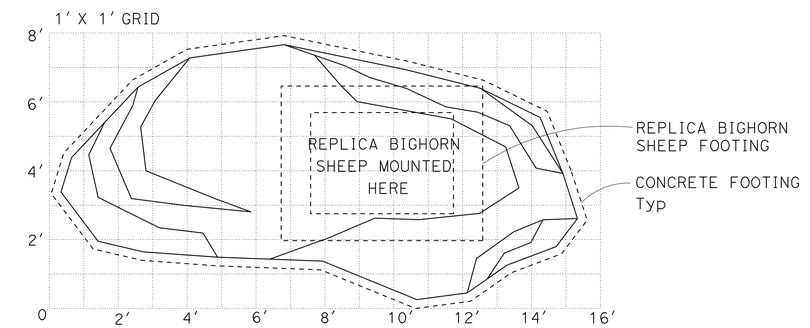

TOP VIEW

REPLICA BIGHORN SHEEP DIMENSIONS:

LENGTH WITH TAIL 62".
SHOULDER HEIGHT 40"

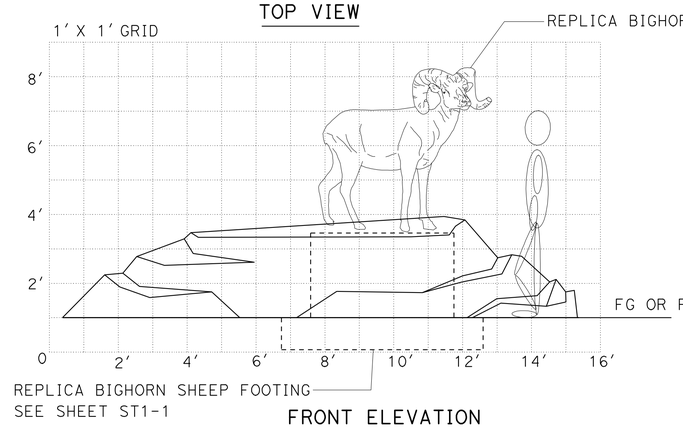

FRONT ELEVATION

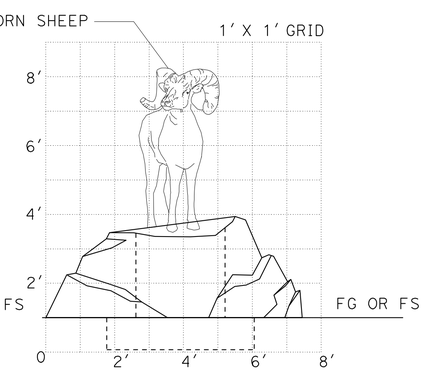

SIDE ELEVATION

1

FABRICATED BOULDERS AND REPLICA BIGHORN SHEEP

CONSTRUCTION DETAILS
FABRICATED BOULDERS
NO SCALE

C-6

STATE OF CALIFORNIA - DEPARTMENT OF TRANSPORTATION
Caltrans® LANDSCAPE ARCHITECTURE
SENIOR LANDSCAPE ARCHITECT: MICHAEL BABICH
CALCULATED-DESIGNED BY: MARIA I. ARIAS
CHECKED BY: MICHAEL M. BABICH
REVISED BY
DATE REVISED

LAST REVISION 04-27-10
DATE PLOTTED => 08-SEP-2010
TIME PLOTTED => 09:24

Dist	COUNTY	ROUTE	POST MILES TOTAL PROJECT	SHEET No.	TOTAL SHEETS
08	SBd	15	160.9/161.5	13	53

Michael M Babich 2-01-10
LICENSED LANDSCAPE ARCHITECT

5-10-10
PLANS APPROVAL DATE

LICENSED LANDSCAPE ARCHITECT M. M. BABICH 4023 Michael M Babich Signature 02-28-10 Renewal Date 02-01-10 Date STATE OF CALIFORNIA

THE STATE OF CALIFORNIA OR ITS OFFICERS OR AGENTS SHALL NOT BE RESPONSIBLE FOR THE ACCURACY OR COMPLETENESS OF SCANNED COPIES OF THIS PLAN SHEET.

NOTES:

1. POSTS SHALL BE 5 1/2" DIAMETER PEELED TREATED TIMBER (Typ)
   RAILS SHALL BE 3 1/2" DIAMETER PEELED TREATED TIMBER (Typ).
2. DOME POST TOPS SHALL NOT BE CUT.

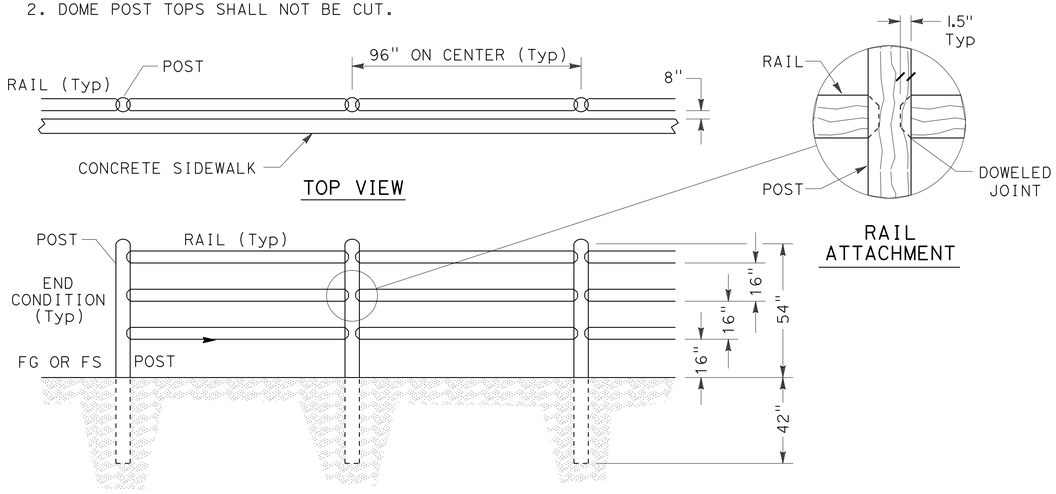

RANCH FENCE

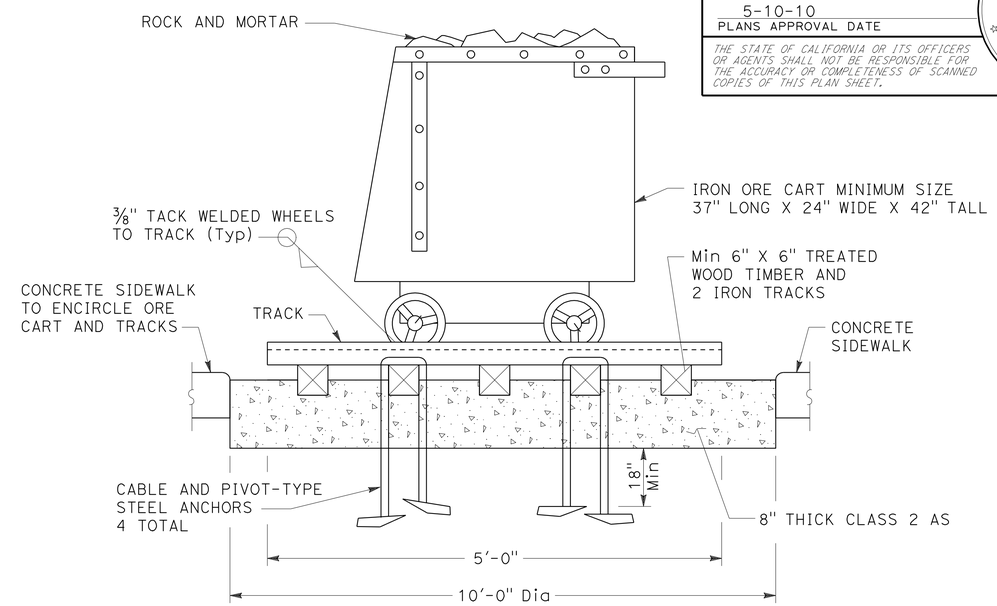

ORE CART

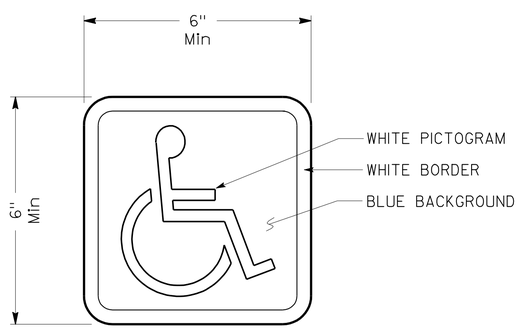

INTERNATIONAL SYMBOL OF ACCESSIBILITY METAL SIGN

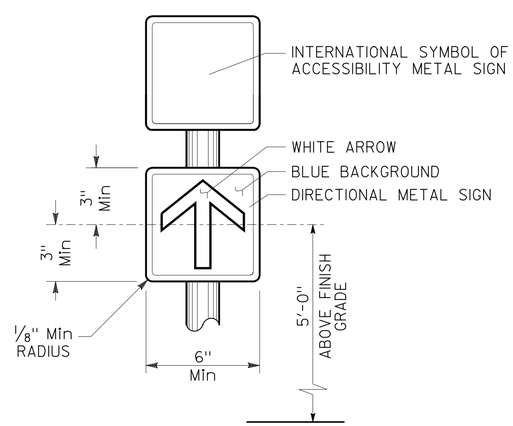

METAL SIGNS

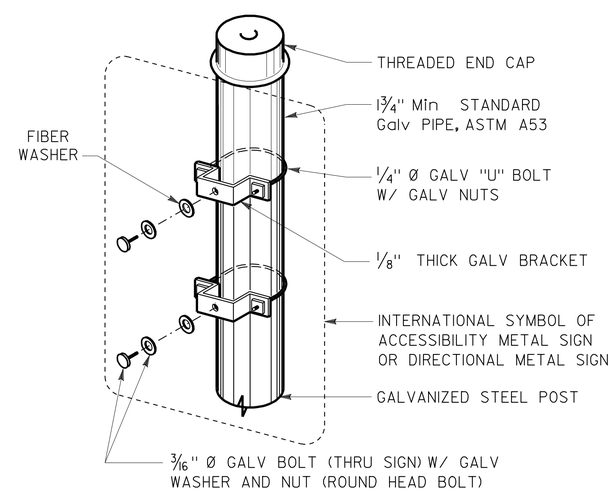

SIGN CONNECTION

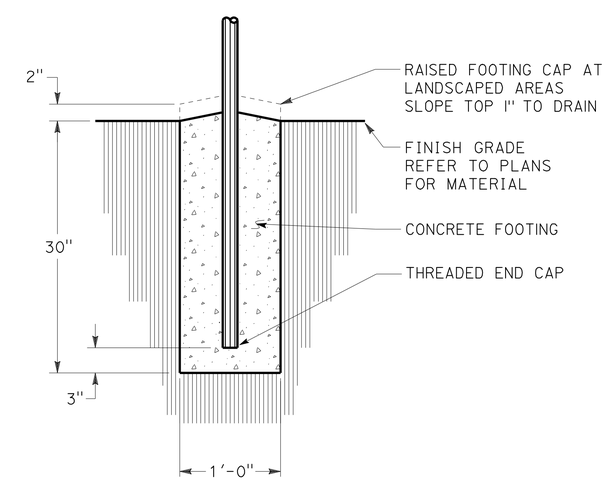

SIGN POST FOOTING

INTERNATIONAL SYMBOL OF ACCESSIBILITY METAL SIGN AND DIRECTIONAL METAL SIGN- ONE POST

CONSTRUCTION DETAILS
MISCELLANEOUS
NO SCALE

C-7

STATE OF CALIFORNIA - DEPARTMENT OF TRANSPORTATION
Caltrans® LANDSCAPE ARCHITECTURE
SENIOR LANDSCAPE ARCHITECT MICHAEL BABICH
CALCULATED-DESIGNED BY MARIA I. ARIAS
CHECKED BY MICHAEL M. BABICH
REVISED BY
DATE REVISED

LAST REVISION 02-01-10
DATE PLOTTED => 08-SEP-2010
TIME PLOTTED => 09:25

Dist	COUNTY	ROUTE	POST MILES TOTAL PROJECT	SHEET No.	TOTAL SHEETS
08	SBd	15	160.9/161.5	14	53

Michael M. Babich 2-01-10
LICENSED LANDSCAPE ARCHITECT

5-10-10
PLANS APPROVAL DATE

LICENSED LANDSCAPE ARCHITECT M. M. BABICH 4021 Signature 02-28-10 Renewal Date 02-01-10 Date STATE OF CALIFORNIA

THE STATE OF CALIFORNIA OR ITS OFFICERS OR AGENTS SHALL NOT BE RESPONSIBLE FOR THE ACCURACY OR COMPLETENESS OF SCANNED COPIES OF THIS PLAN SHEET.

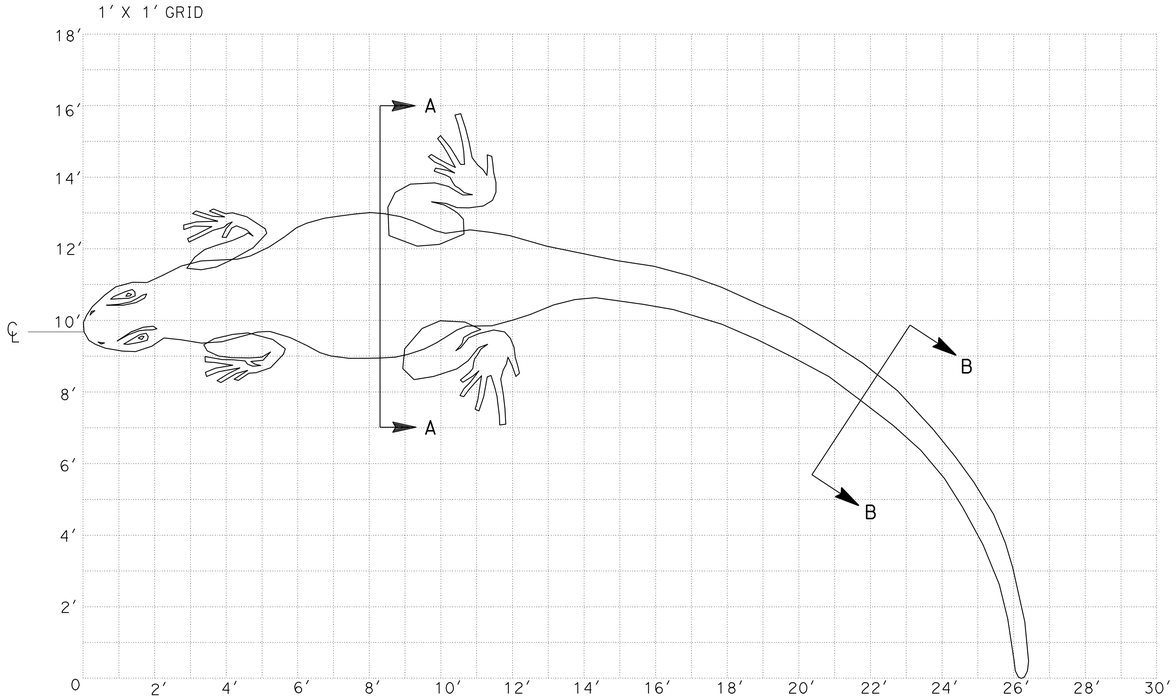

TOP VIEW

NOTES:

1. THE FABRICATED DESERT IGUANA CONSISTS OF CONCRETE APPLIED OVER WELDED WIRE MESH AND #3 REINFORCING STEEL.
2. THE FABRICATED DESERT IGUANA, INCLUDING FOOTING, SHALL BE FORMED AS A CONTINUOUS UNIT AND SHALL BE SOLID, EXCEPT VOID AREA SHOWN.
3. A 3" MINIMUM CONCRETE SCULPTING SHALL BE APPLIED OVER WIRE MESH AND REINFORCING STEEL (ON ALL SIDES).
4. REINFORCEMENT AT ALL LIMBS SHALL BE #3 REINFORCING STEEL. NO GAP SHALL REMAIN BETWEEN THE BODY AND ANY LIMB.

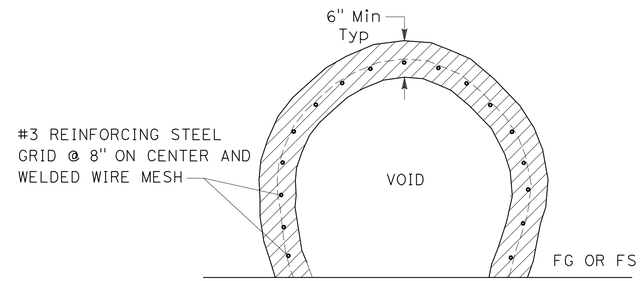

SECTION A-A

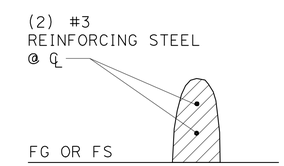

SECTION B-B

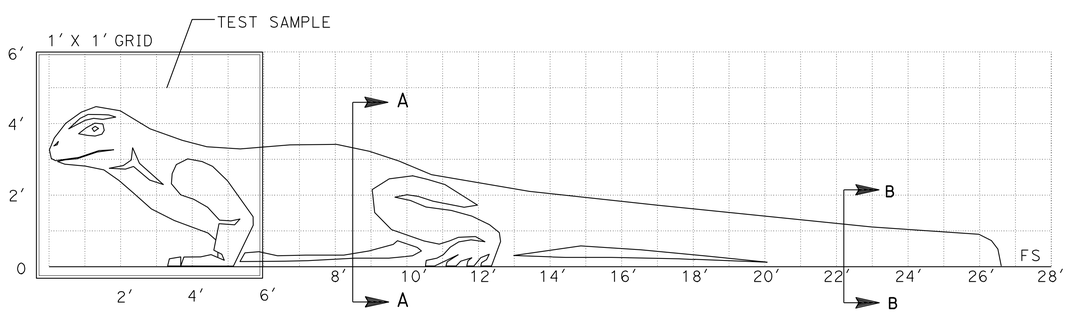

FRONT ELEVATION

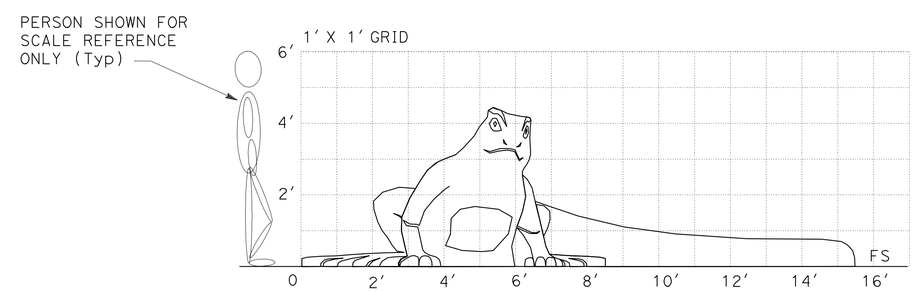

SIDE ELEVATION

DIPSOSAURUS DORSALIS

FABRICATED DESERT IGUANA

CONSTRUCTION DETAILS
FABRICATED DESERT IGUANA

NO SCALE

C-8

STATE OF CALIFORNIA - DEPARTMENT OF TRANSPORTATION
Caltrans® LANDSCAPE ARCHITECTURE

SENIOR LANDSCAPE ARCHITECT: MICHAEL BABICH

CALCULATED-DESIGNED BY: MARIA I. ARIAS
CHECKED BY: MICHAEL M. BABICH

REVISED BY | DATE REVISED

LAST REVISION 02-01-10 | DATE PLOTTED => 08-SEP-2010 | TIME PLOTTED => 09:25

Dist	COUNTY	ROUTE	POST MILES TOTAL PROJECT	SHEET No.	TOTAL SHEETS
08	SBd	15	160.9/161.5	15	53

Michael M. Babich 2-01-10
LICENSED LANDSCAPE ARCHITECT

5-10-10
PLANS APPROVAL DATE

LICENSED LANDSCAPE ARCHITECT M. M. BABICH 4023 Signature 02-28-10 Renewal Date 02-01-10 Date STATE OF CALIFORNIA

THE STATE OF CALIFORNIA OR ITS OFFICERS OR AGENTS SHALL NOT BE RESPONSIBLE FOR THE ACCURACY OR COMPLETENESS OF SCANNED COPIES OF THIS PLAN SHEET.

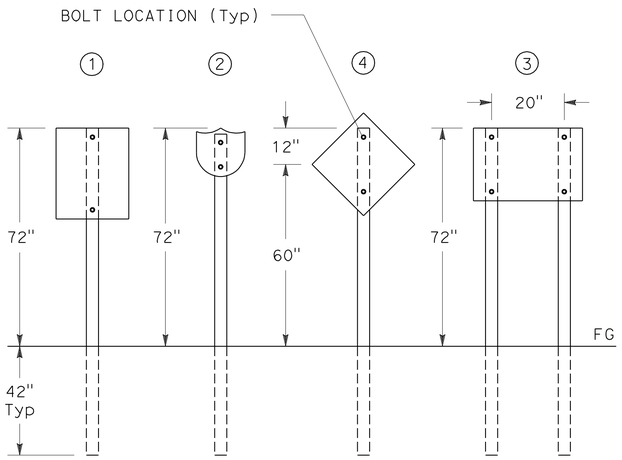

NOTES:

1. WOOD POSTS SHALL BE 4" X 4" NOMINAL SIZE.
2. FASTENERS SHALL BE 2 - ⅜" X 6" GALVANIZED CARRIAGE BOLTS PER POST.
3. DRILL A ½" HOLE THROUGH PANELS AND POST AT EACH BOLT LOCATION.
4. INSERT AND FASTEN BOLTS THROUGH HOLES. PLACE A ⅜" X 1¼" FLAT WASHER AGAINST THE PANEL FACE AT EACH HOLE.
5. SEE SHEET C-28 FOR REPLICA HIGHWAY SIGN PANELS.

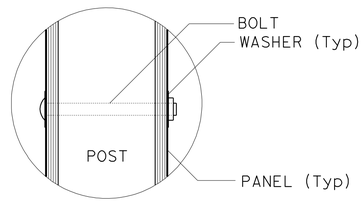

SECTION
TYPICAL

REPLICA HIGHWAY SIGN POSTS

NOTES:

1. POSITION ½" X 10" THREADED J RODS TO CORRESPOND WITH BASE OF STATUARY. EMBED J RODS NTO THE CONCRETE FOOTING WHILE IN PLASTIC STAGE OF SET.
2. THE STATUARY SHALL SIT PLUMB AND REST FIRMLY ON FOOTING SURFACE.
3. DESERT TORTOISE: L 15" X H 6".
4. HARE: L 25" X H 30".
5. SEE SHEET C-6 FOR REPLICA BIGHORN SHEEP WITH FOOTING.

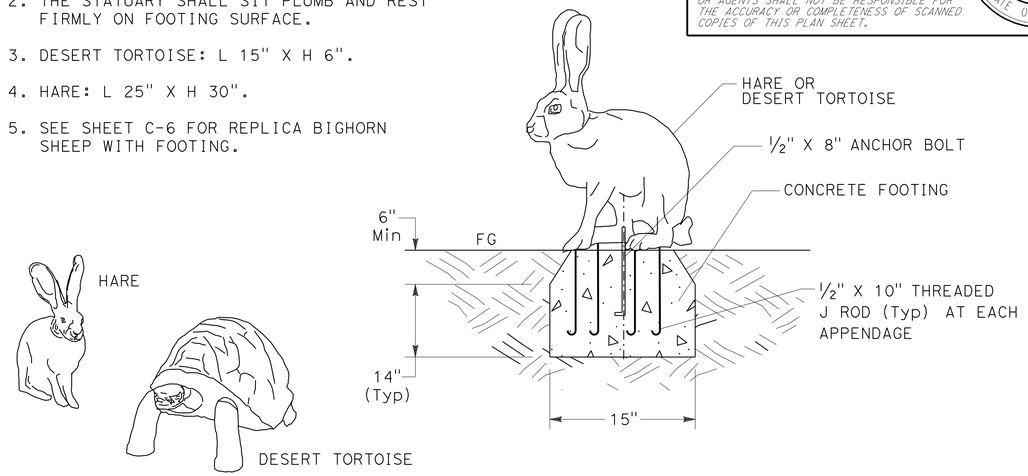

REPLICA HARE AND DESERT TORTOISE FOOTING

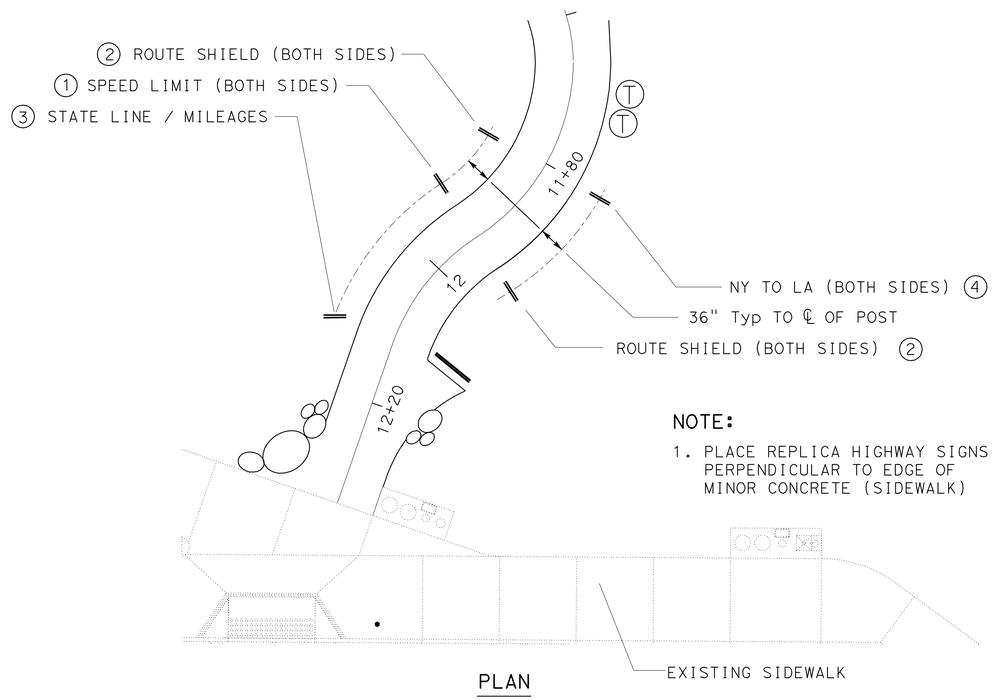

NOTE:

1. PLACE REPLICA HIGHWAY SIGNS PERPENDICULAR TO EDGE OF MINOR CONCRETE (SIDEWALK)

PLAN

REPLICA HIGHWAY SIGN LAYOUT

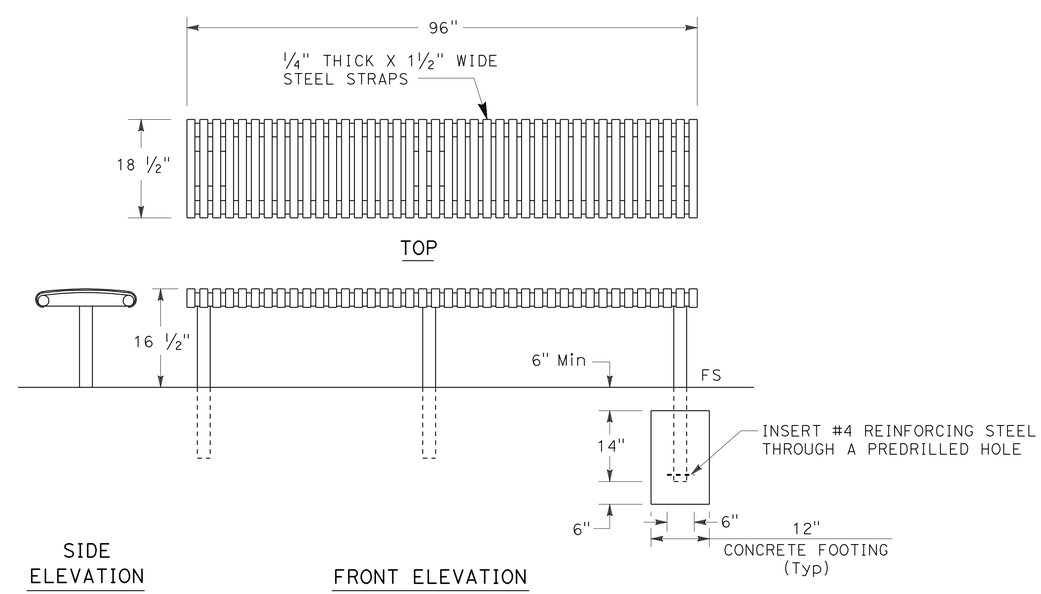

PREFABRICATED METAL BENCH

CONSTRUCTION DETAILS
REPLICA HIGHWAY SIGNS AND MISCELLANEOUS FOOTINGS

NO SCALE

C-9

STATE OF CALIFORNIA - DEPARTMENT OF TRANSPORTATION
Caltrans® LANDSCAPE ARCHITECTURE
SENIOR LANDSCAPE ARCHITECT: MICHAEL BABICH
CALCULATED-DESIGNED BY: MARIA I. ARIAS
CHECKED BY: MICHAEL M. BABICH
REVISED BY
DATE REVISED

LAST REVISION 02-01-10
DATE PLOTTED => 08-SEP-2010
TIME PLOTTED => 09:25

Dist	COUNTY	ROUTE	POST MILES TOTAL PROJECT	SHEET No.	TOTAL SHEETS
08	SBd	15	160.9/161.5	16	53

Michael M Babich 2-01-10
LICENSED LANDSCAPE ARCHITECT

5-10-10
PLANS APPROVAL DATE

LICENSED LANDSCAPE ARCHITECT M. M. BABICH 4023 Signature 02-28-10 Renewal Date 02-01-10 Date STATE OF CALIFORNIA

THE STATE OF CALIFORNIA OR ITS OFFICERS OR AGENTS SHALL NOT BE RESPONSIBLE FOR THE ACCURACY OR COMPLETENESS OF SCANNED COPIES OF THIS PLAN SHEET.

NOTES:

1. USE SAME FOOTING FOR EACH BASE TYPE.
2. SEE SHEET L-1 FOR LOCATION OF ADA COMPLIANT (HA) NON-COIN OPERATED BINOCULARS.

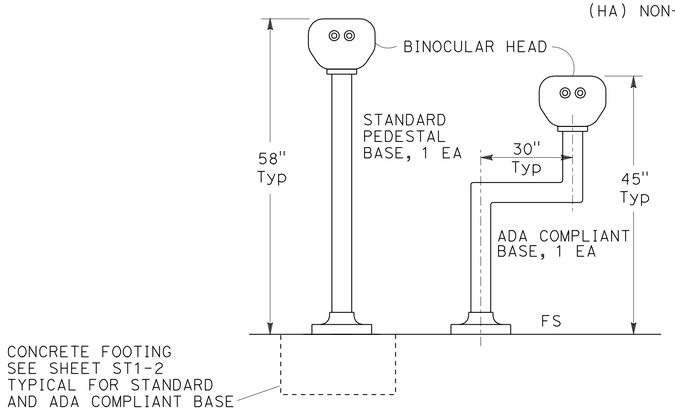

ELEVATION

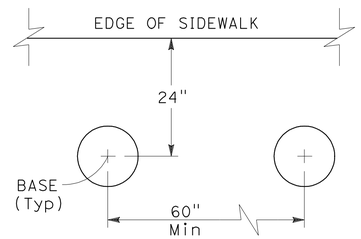

PLAN

NON-COIN OPERATED BINOCULARS, SOUTHBOUND TRAIL

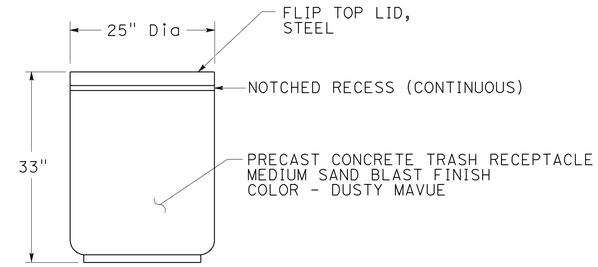

ELEVATION

TRASH RECEPTACLE

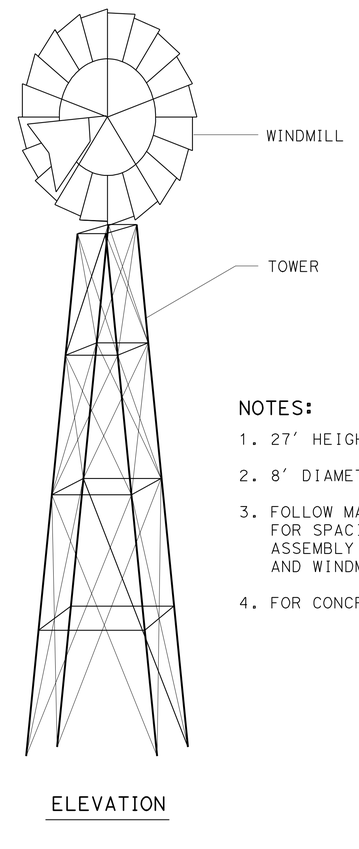

ELEVATION

NOTES:

1. 27' HEIGHT STEEL 4 POST TOWER.
2. 8' DIAMETER STEEL WINDMILL BLADE.
3. FOLLOW MANUFACTURER'S RECOMMENDATIONS FOR SPACING AND LEVELING OF POSTS, ASSEMBLY AND ERECTION OF TOWER AND WINDMILL.
4. FOR CONCRETE FOOTING SEE SHEET ST1-3.

WINDMILL (NON-FUNCTIONAL)

NOTE:

1. SEE SHEET L-2 FOR LOCATION OF ADA COMPLIANT (HA) NON-COIN OPERATED BINOCULARS

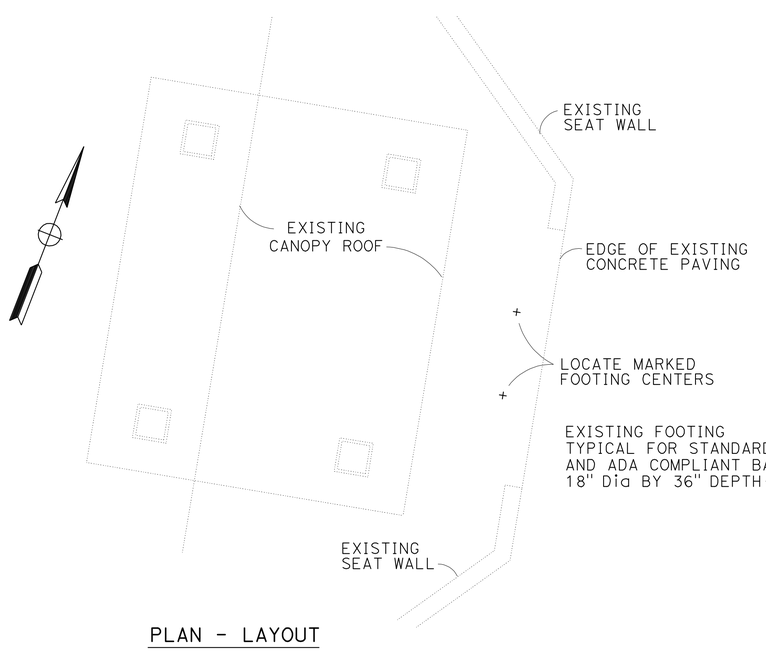

PLAN - LAYOUT

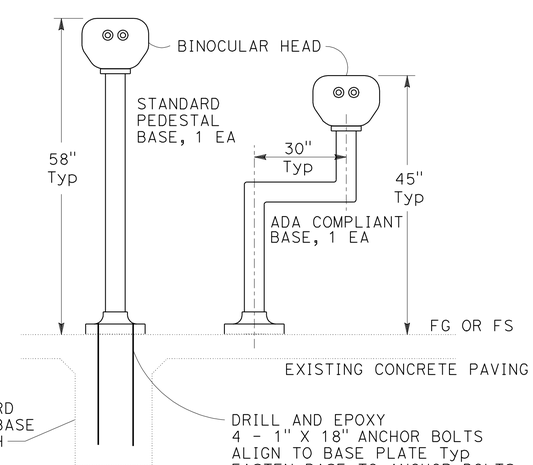

ELEVATION

NON-COIN OPERATED BINOCULARS, NORTHBOUND SITE

CONSTRUCTION DETAILS
MISCELLANEOUS

NO SCALE

C-10

STATE OF CALIFORNIA - DEPARTMENT OF TRANSPORTATION
Caltrans® LANDSCAPE ARCHITECTURE
SENIOR LANDSCAPE ARCHITECT: MICHAEL BABICH
CALCULATED-DESIGNED BY: MARIA I. ARIAS
CHECKED BY: MICHAEL M. BABICH
REVISED BY
DATE REVISED

LAST REVISION 02-01-10
DATE PLOTTED => 08-SEP-2010
TIME PLOTTED => 09:25

Dist	COUNTY	ROUTE	POST MILES TOTAL PROJECT	SHEET No.	TOTAL SHEETS
08	SBd	15	160.9/161.5	17	53

Michael M. Babich 2-01-10
LICENSED LANDSCAPE ARCHITECT

5-10-10
PLANS APPROVAL DATE

LICENSED LANDSCAPE ARCHITECT M. M. BABICH 4021 Michael M. Babich Signature 02-28-10 Renewal Date 02-01-10 Date STATE OF CALIFORNIA

THE STATE OF CALIFORNIA OR ITS OFFICERS OR AGENTS SHALL NOT BE RESPONSIBLE FOR THE ACCURACY OR COMPLETENESS OF SCANNED COPIES OF THIS PLAN SHEET.

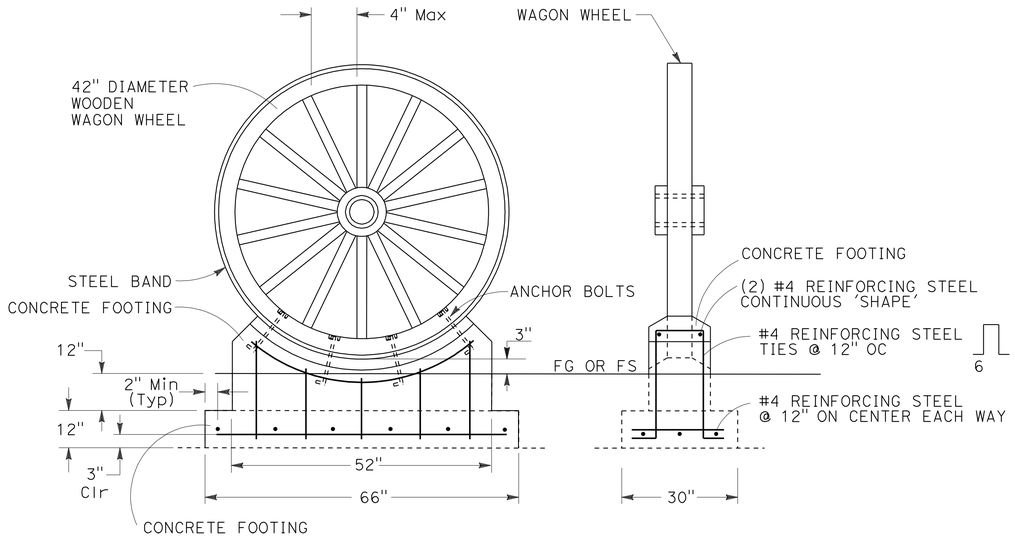

MOUNTED WAGON WHEEL

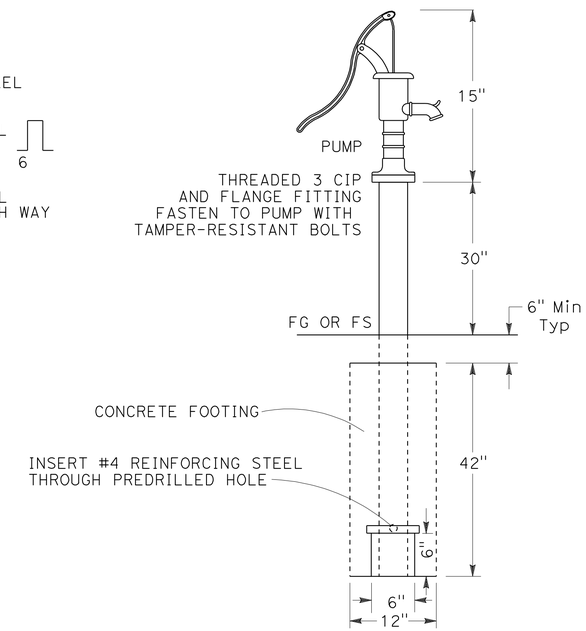

MANUAL WATER PUMP (NON-FUNCTIONAL)

NOTES:

1. VESSELS SHALL CONSIST OF SOLID PRECAST CONCRETE WITH EMBEDDED 2" X 3½" X ¼" STEEL 'U' BOLT, WITH NUTS & STRAP AT UNDERSIDE OF EACH VESSEL.
2. SECURE EACH VESSEL WITH 36" X ¼" CABLE & PIVOT-TYPE STEEL ANCHOR.

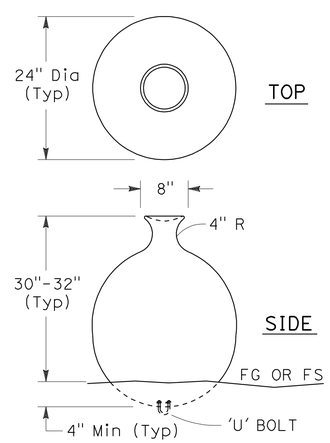

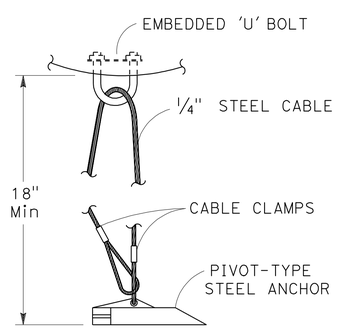

ANCHORING ASSEMBLY

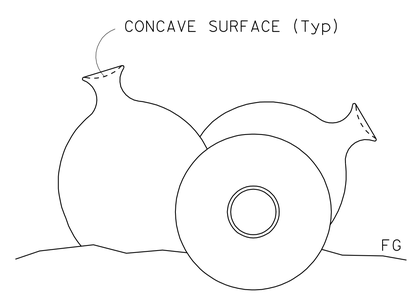

ELEVATION

FABRICATED WATER VESSELS

CONSTRUCTION DETAILS
MISCELLANEOUS
NO SCALE

C-11

STATE OF CALIFORNIA - DEPARTMENT OF TRANSPORTATION
Caltrans® LANDSCAPE ARCHITECTURE
SENIOR LANDSCAPE ARCHITECT: MICHAEL BABICH
CALCULATED-DESIGNED BY: MARIA I. ARIAS
CHECKED BY: MICHAEL M. BABICH
REVISED BY
DATE REVISED

LAST REVISION 02-01-10 | DATE PLOTTED => 08-SEP-2010 | TIME PLOTTED => 09:25

Dist	COUNTY	ROUTE	POST MILES TOTAL PROJECT	SHEET No.	TOTAL SHEETS
08	SBd	15	160.9/161.5	18	53

Michael M Babich 2-01-10
LICENSED LANDSCAPE ARCHITECT

5-10-10
PLANS APPROVAL DATE

LICENSED LANDSCAPE ARCHITECT
M. M. BABICH 4023
Michael M Babich
Signature
02-28-10
Renewal Date
02-01-10
Date
STATE OF CALIFORNIA

THE STATE OF CALIFORNIA OR ITS OFFICERS OR AGENTS SHALL NOT BE RESPONSIBLE FOR THE ACCURACY OR COMPLETENESS OF SCANNED COPIES OF THIS PLAN SHEET.

44" TYPICAL

66" TYPICAL

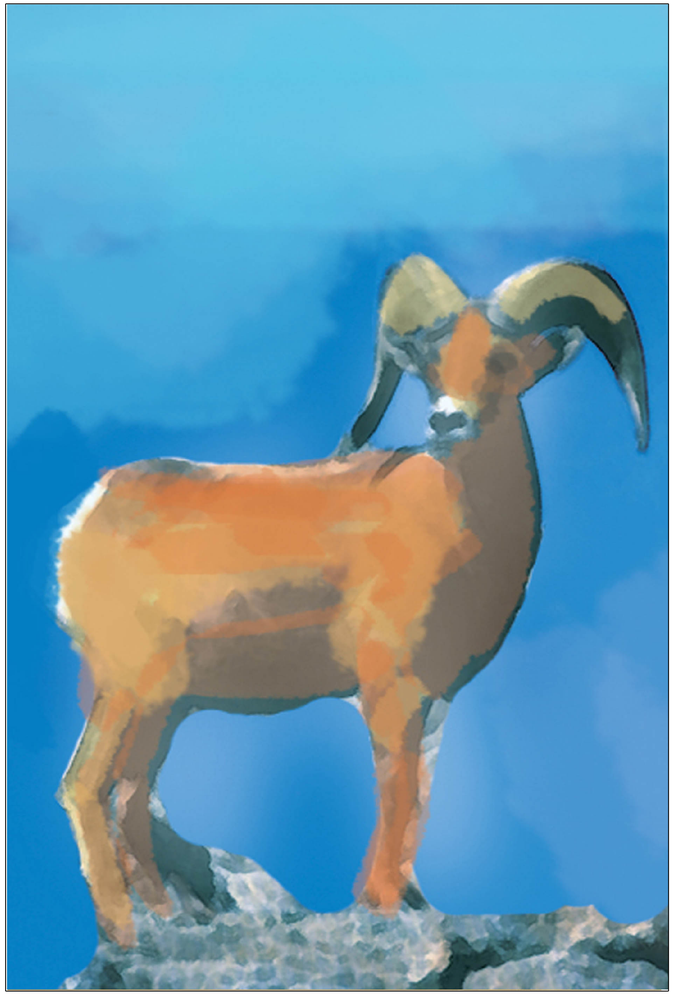

UPPER SIGN PANEL

LOWER SIGN PANEL

CONSTRUCTION DETAILS
VERTICAL SIGN PANELS - 1A

NO SCALE

C-12

STATE OF CALIFORNIA - DEPARTMENT OF TRANSPORTATION
Caltrans® LANDSCAPE ARCHITECTURE

SENIOR LANDSCAPE ARCHITECT: MICHAEL BABICH

CALCULATED-DESIGNED BY: MARIA I. ARIAS
CHECKED BY: MICHAEL M. BABICH

REVISED BY
DATE REVISED

LAST REVISION 02-01-10
DATE PLOTTED => 08-SEP-2010
TIME PLOTTED => 09:25

Dist	COUNTY	ROUTE	POST MILES TOTAL PROJECT	SHEET No.	TOTAL SHEETS
08	SBd	15	160.9/161.5	19	53

Michael M. Babich 2-01-10
LICENSED LANDSCAPE ARCHITECT

5-10-10
PLANS APPROVAL DATE

LICENSED LANDSCAPE ARCHITECT M. M. BABICH 4053 Signature 02-28-10 Renewal Date 02-01-10 Date STATE OF CALIFORNIA

THE STATE OF CALIFORNIA OR ITS OFFICERS OR AGENTS SHALL NOT BE RESPONSIBLE FOR THE ACCURACY OR COMPLETENESS OF SCANNED COPIES OF THIS PLAN SHEET.

44" TYPICAL

66" TYPICAL

UPPER SIGN PANEL

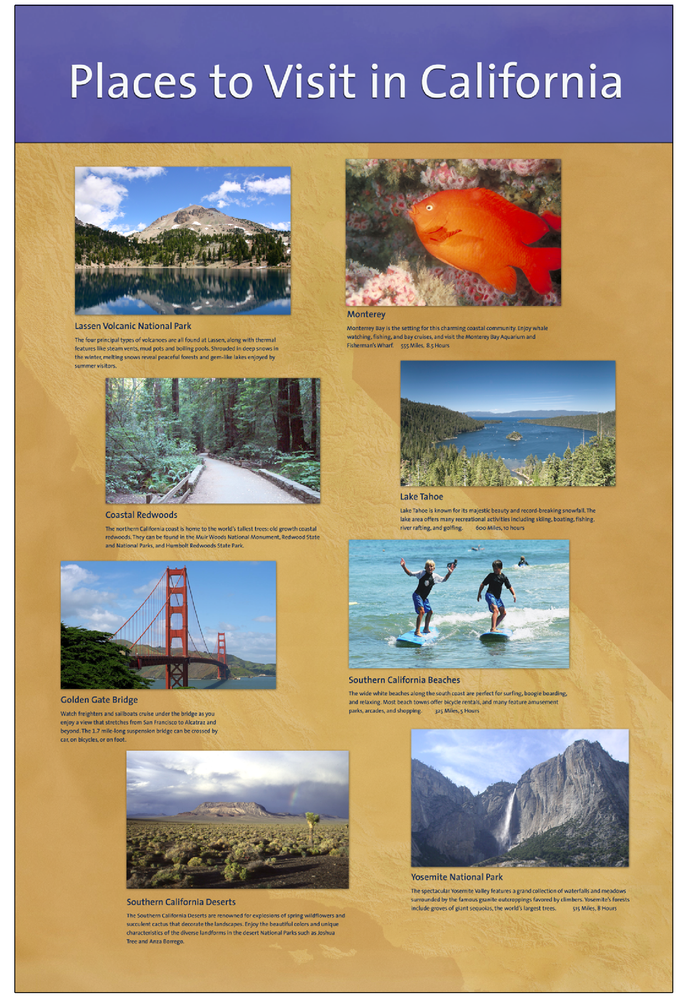

LOWER SIGN PANEL

CONSTRUCTION DETAILS
VERTICAL SIGN PANELS - 1B

NO SCALE

C-13

STATE OF CALIFORNIA - DEPARTMENT OF TRANSPORTATION
Caltrans® LANDSCAPE ARCHITECTURE

SENIOR LANDSCAPE ARCHITECT: MICHAEL BABICH

CALCULATED-DESIGNED BY: MARIA I. ARIAS
CHECKED BY: MICHAEL M. BABICH

REVISED BY
DATE REVISED

LAST REVISION 02-01-10 | DATE PLOTTED => 08-SEP-2010 | TIME PLOTTED => 09:25

Dist	COUNTY	ROUTE	POST MILES TOTAL PROJECT	SHEET No.	TOTAL SHEETS
08	SBd	15	160.9/161.5	20	53

Michael M. Babich 2-01-10
LICENSED LANDSCAPE ARCHITECT

5-10-10
PLANS APPROVAL DATE

LICENSED LANDSCAPE ARCHITECT
M. M. BABICH 4023
Signature
02-28-10
Renewal Date
02-01-10
Date
STATE OF CALIFORNIA

THE STATE OF CALIFORNIA OR ITS OFFICERS OR AGENTS SHALL NOT BE RESPONSIBLE FOR THE ACCURACY OR COMPLETENESS OF SCANNED COPIES OF THIS PLAN SHEET.

44"
TYPICAL

66"
TYPICAL

UPPER SIGN PANEL

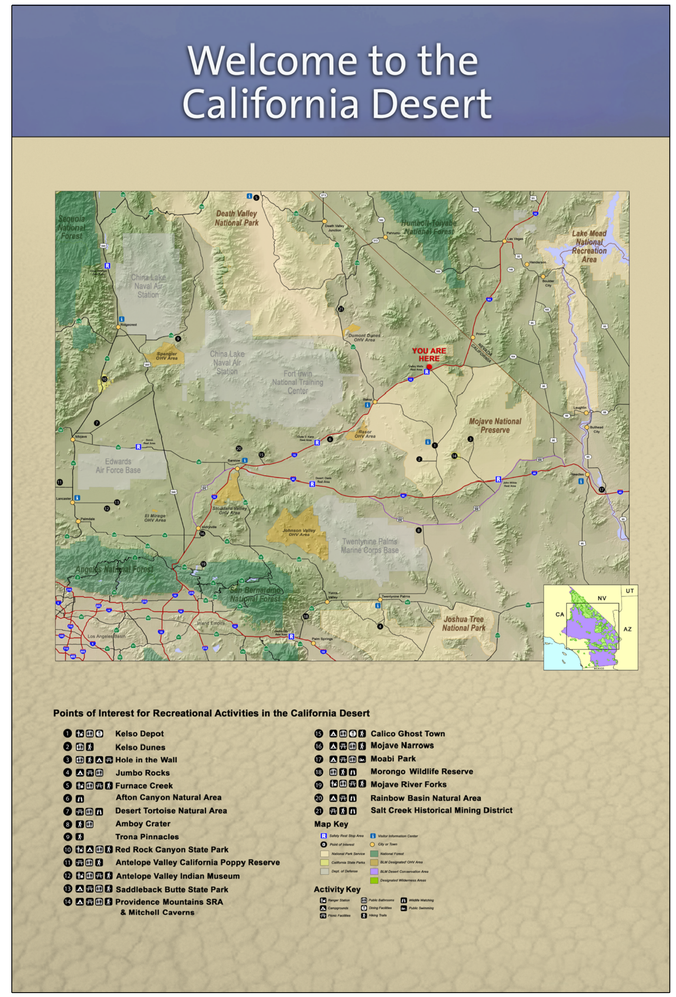

LOWER SIGN PANEL

CONSTRUCTION DETAILS
VERTICAL SIGN PANELS - 2A
NO SCALE

C-14

STATE OF CALIFORNIA - DEPARTMENT OF TRANSPORTATION
Caltrans® LANDSCAPE ARCHITECTURE

SENIOR LANDSCAPE ARCHITECT: MICHAEL BABICH
CALCULATED-DESIGNED BY: MARIA I. ARIAS
CHECKED BY: MICHAEL M. BABICH
REVISED BY
DATE REVISED

LAST REVISION 02-01-10
DATE PLOTTED => 08-SEP-2010
TIME PLOTTED => 09:26

Dist	COUNTY	ROUTE	POST MILES TOTAL PROJECT	SHEET No.	TOTAL SHEETS
08	SBd	15	160.9/161.5	21	53

Michael M Babich 2-01-10
LICENSED LANDSCAPE ARCHITECT

5-10-10
PLANS APPROVAL DATE

LICENSED LANDSCAPE ARCHITECT
M. M. BABICH 4053
Michael M Babich
Signature
02-28-10
Renewal Date
02-01-10
Date
STATE OF CALIFORNIA

THE STATE OF CALIFORNIA OR ITS OFFICERS OR AGENTS SHALL NOT BE RESPONSIBLE FOR THE ACCURACY OR COMPLETENESS OF SCANNED COPIES OF THIS PLAN SHEET.

44"
TYPICAL

66"
TYPICAL

UPPER SIGN PANEL

LOWER SIGN PANEL

CONSTRUCTION DETAILS
VERTICAL SIGN PANELS - 2B

NO SCALE

C-15

STATE OF CALIFORNIA - DEPARTMENT OF TRANSPORTATION
Caltrans® LANDSCAPE ARCHITECTURE

SENIOR LANDSCAPE ARCHITECT
MICHAEL BABICH

CALCULATED-DESIGNED BY MARIA I. ARIAS
CHECKED BY MICHAEL M. BABICH

REVISED BY
DATE REVISED

LAST REVISION 02-01-10
DATE PLOTTED => 08-SEP-2010
TIME PLOTTED => 09:26

Dist	COUNTY	ROUTE	POST MILES TOTAL PROJECT	SHEET No.	TOTAL SHEETS
08	SBd	15	160.9/161.5	22	53

Michael M Babich 3-16-10
LICENSED LANDSCAPE ARCHITECT

5-10-10
PLANS APPROVAL DATE

LICENSED LANDSCAPE ARCHITECT
M. M. BABICH 4023
Michael M Babich
Signature
02-28-10
Renewal Date
03-16-10
Date
STATE OF CALIFORNIA

THE STATE OF CALIFORNIA OR ITS OFFICERS OR AGENTS SHALL NOT BE RESPONSIBLE FOR THE ACCURACY OR COMPLETENESS OF SCANNED COPIES OF THIS PLAN SHEET.

44"
TYPICAL

66"
TYPICAL

UPPER SIGN PANEL

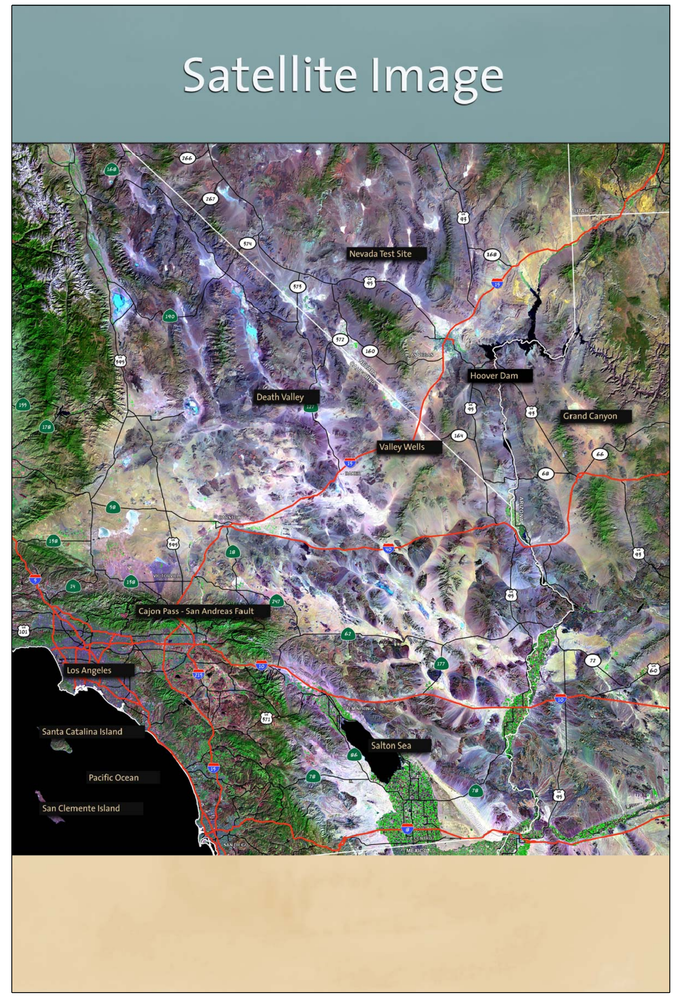

LOWER SIGN PANEL

CONSTRUCTION DETAILS
VERTICAL SIGN PANELS - 3A

NO SCALE

C-16

STATE OF CALIFORNIA - DEPARTMENT OF TRANSPORTATION
Caltrans® LANDSCAPE ARCHITECTURE

SENIOR LANDSCAPE ARCHITECT: MICHAEL BABICH

CALCULATED-DESIGNED BY: MARIA I. ARIAS
CHECKED BY: MICHAEL M. BABICH

REVISED BY
DATE REVISED

LAST REVISION 03-16-10
DATE PLOTTED => 08-SEP-2010
TIME PLOTTED => 09:26

Dist	COUNTY	ROUTE	POST MILES TOTAL PROJECT	SHEET No.	TOTAL SHEETS
08	SBd	15	160.9/161.5	23	53

Michael M. Babich 2-01-10
LICENSED LANDSCAPE ARCHITECT

5-10-10
PLANS APPROVAL DATE

LICENSED LANDSCAPE ARCHITECT M. M. BABICH 4023 Signature 02-28-10 Renewal Date 02-01-10 Date STATE OF CALIFORNIA

THE STATE OF CALIFORNIA OR ITS OFFICERS OR AGENTS SHALL NOT BE RESPONSIBLE FOR THE ACCURACY OR COMPLETENESS OF SCANNED COPIES OF THIS PLAN SHEET.

44" TYPICAL

66" TYPICAL

UPPER SIGN PANEL

LOWER SIGN PANEL

CONSTRUCTION DETAILS
VERTICAL SIGN PANELS - 3B

NO SCALE

C-17

STATE OF CALIFORNIA - DEPARTMENT OF TRANSPORTATION
Caltrans® LANDSCAPE ARCHITECTURE

SENIOR LANDSCAPE ARCHITECT
MICHAEL BABICH

CALCULATED-DESIGNED BY MARIA I. ARIAS
CHECKED BY MICHAEL M. BABICH
REVISED BY
DATE REVISED

LAST REVISION 02-01-10
DATE PLOTTED => 08-SEP-2010
TIME PLOTTED => 09:27

Dist	COUNTY	ROUTE	POST MILES TOTAL PROJECT	SHEET No.	TOTAL SHEETS
08	SBd	15	160.9/161.5	24	53

Michael M. Babich 2-01-10
LICENSED LANDSCAPE ARCHITECT

5-10-10
PLANS APPROVAL DATE

LICENSED LANDSCAPE ARCHITECT M. M. BABICH 4023 STATE OF CALIFORNIA
Signature 02-28-10
Renewal Date 02-01-10
Date

THE STATE OF CALIFORNIA OR ITS OFFICERS OR AGENTS SHALL NOT BE RESPONSIBLE FOR THE ACCURACY OR COMPLETENESS OF SCANNED COPIES OF THIS PLAN SHEET.

44" TYPICAL

66" TYPICAL

UPPER SIGN PANEL

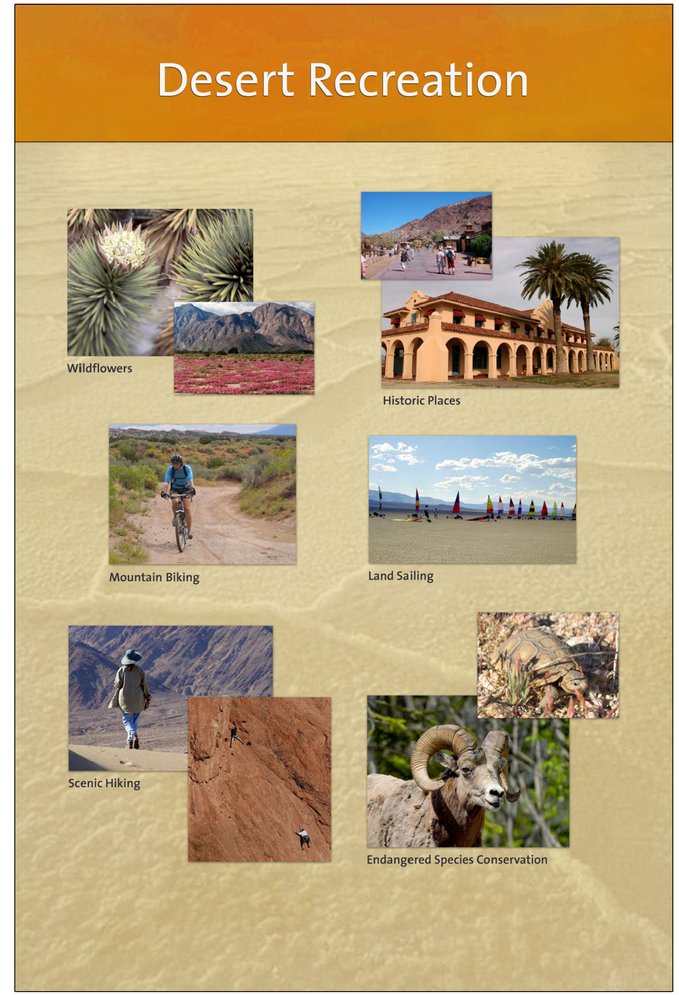

LOWER SIGN PANEL

CONSTRUCTION DETAILS
VERTICAL SIGN PANELS - 4A
NO SCALE

C-18

STATE OF CALIFORNIA - DEPARTMENT OF TRANSPORTATION
Caltrans® LANDSCAPE ARCHITECTURE

SENIOR LANDSCAPE ARCHITECT: MICHAEL BABICH
CALCULATED-DESIGNED BY: MARIA I. ARIAS
CHECKED BY: MICHAEL M. BABICH
REVISED BY
DATE REVISED

LAST REVISION 02-01-10
DATE PLOTTED => 08-SEP-2010
TIME PLOTTED => 09:27

Dist	COUNTY	ROUTE	POST MILES TOTAL PROJECT	SHEET No.	TOTAL SHEETS
08	SBd	15	160.9/161.5	25	53

Michael M. Babich 2-01-10
LICENSED LANDSCAPE ARCHITECT

5-10-10
PLANS APPROVAL DATE

LICENSED LANDSCAPE ARCHITECT
M. M. BABICH 4023
Michael M. Babich
Signature
02-28-10
Renewal Date
02-01-10
Date
STATE OF CALIFORNIA

THE STATE OF CALIFORNIA OR ITS OFFICERS OR AGENTS SHALL NOT BE RESPONSIBLE FOR THE ACCURACY OR COMPLETENESS OF SCANNED COPIES OF THIS PLAN SHEET.

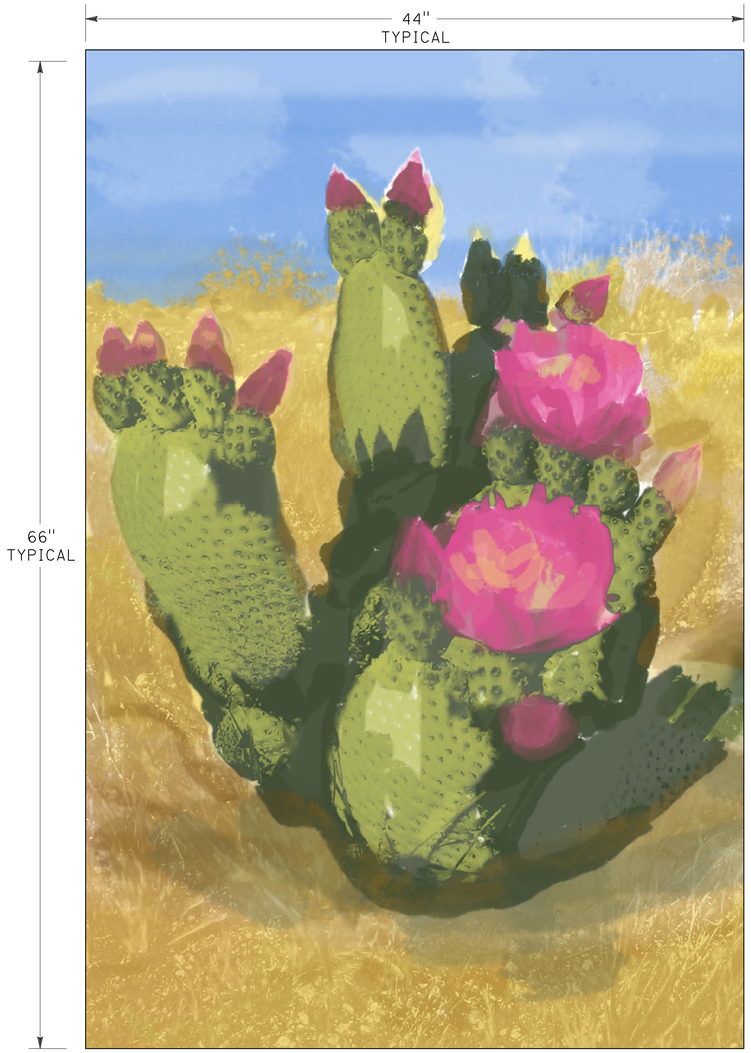

UPPER SIGN PANEL

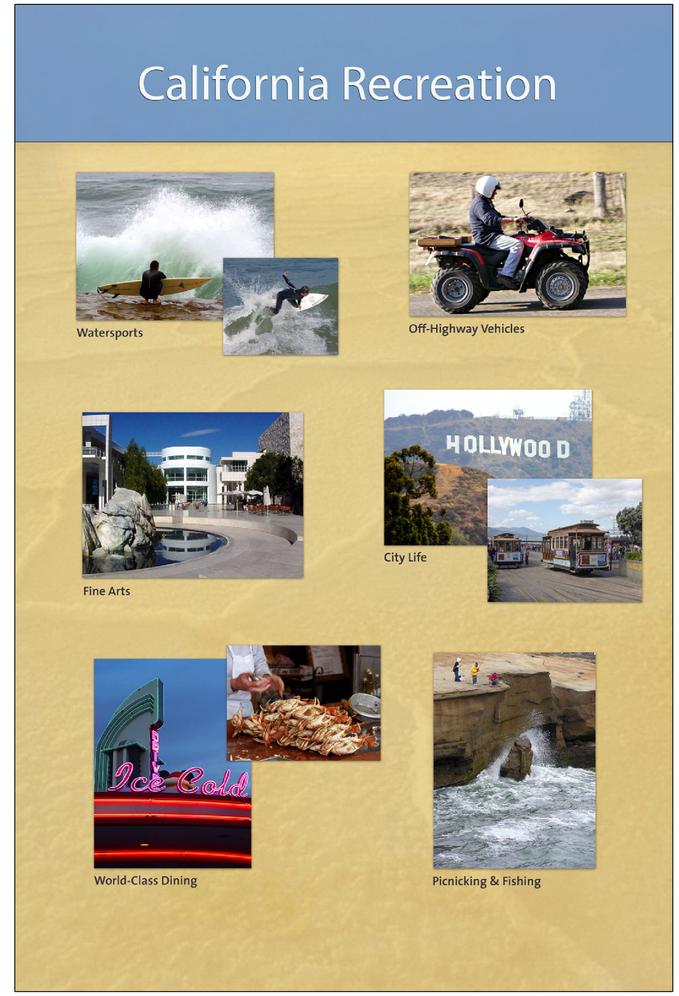

LOWER SIGN PANEL

CONSTRUCTION DETAILS
VERTICAL SIGN PANELS - 4B
NO SCALE

C-19

STATE OF CALIFORNIA - DEPARTMENT OF TRANSPORTATION
Caltrans® LANDSCAPE ARCHITECTURE

SENIOR LANDSCAPE ARCHITECT: MICHAEL BABICH
CALCULATED-DESIGNED BY: MARIA I. ARIAS
CHECKED BY: MICHAEL M. BABICH
REVISED BY
DATE REVISED

LAST REVISION 02-01-10
DATE PLOTTED => 08-SEP-2010
TIME PLOTTED => 09:27

Dist	COUNTY	ROUTE	POST MILES TOTAL PROJECT	SHEET No.	TOTAL SHEETS
08	SBd	15	160.9/161.5	26	53

Michael M. Babich 2-01-10
LICENSED LANDSCAPE ARCHITECT

5-10-10
PLANS APPROVAL DATE

LICENSED LANDSCAPE ARCHITECT M. M. BABICH 4023 Signature 02-28-10 Renewal Date 02-01-10 Date STATE OF CALIFORNIA

THE STATE OF CALIFORNIA OR ITS OFFICERS OR AGENTS SHALL NOT BE RESPONSIBLE FOR THE ACCURACY OR COMPLETENESS OF SCANNED COPIES OF THIS PLAN SHEET.

44" TYPICAL

66" TYPICAL

UPPER SIGN PANEL

Safety First

Travel Safely in the Desert
A life-threatening emergency can quickly develop if you become stuck, lost, or injured. Be prepared.

Safety Checklist:
- Let someone know where you are going and when you plan to return.
- Take plenty of water: A minimum of one gallon per person per day, more if you are hiking in hot weather.
- Check tires and gas gauge before leaving the paved roadway.
- If you get lost, stay with your vehicle. It is easier to spot than a person.

Flash Floods
Bone-dry for much of the year, the California Desert can become suddenly awash in floodwaters. Watch for summer storms; their intense rains can flood roadways, and damage road surfaces. If you see water crossing the roadway, don't attempt to drive across. Wait at a safe distance for floodwaters to recede, or find an alternate route.

Leave No Trace, or better yet, Tread Lightly!
As you explore California, remember many others are visiting, also. Protect the places you visit and leave a quality experience for those who will come after you. Preserve the past, be respectful of nature and considerate of future visitors.

LOWER SIGN PANEL

CONSTRUCTION DETAILS
VERTICAL SIGN PANELS - 5A

NO SCALE

C-20

STATE OF CALIFORNIA - DEPARTMENT OF TRANSPORTATION
Caltrans LANDSCAPE ARCHITECTURE

SENIOR LANDSCAPE ARCHITECT: MICHAEL BABICH

CALCULATED-DESIGNED BY: MARIA I. ARIAS
CHECKED BY: MICHAEL M. BABICH

REVISED BY
DATE REVISED

LAST REVISION 02-01-10
DATE PLOTTED => 08-SEP-2010
TIME PLOTTED => 09:27

Dist	COUNTY	ROUTE	POST MILES TOTAL PROJECT	SHEET No.	TOTAL SHEETS
08	SBd	15	160.9/161.5	27	53

Michael M. Babich 2-01-10
LICENSED LANDSCAPE ARCHITECT

5-10-10
PLANS APPROVAL DATE

LICENSED LANDSCAPE ARCHITECT
M. M. BABICH 4523
Michael M. Babich
Signature
02-28-10
Renewal Date
02-01-10
Date
STATE OF CALIFORNIA

THE STATE OF CALIFORNIA OR ITS OFFICERS OR AGENTS SHALL NOT BE RESPONSIBLE FOR THE ACCURACY OR COMPLETENESS OF SCANNED COPIES OF THIS PLAN SHEET.

44"
TYPICAL

66"
TYPICAL

UPPER SIGN PANEL

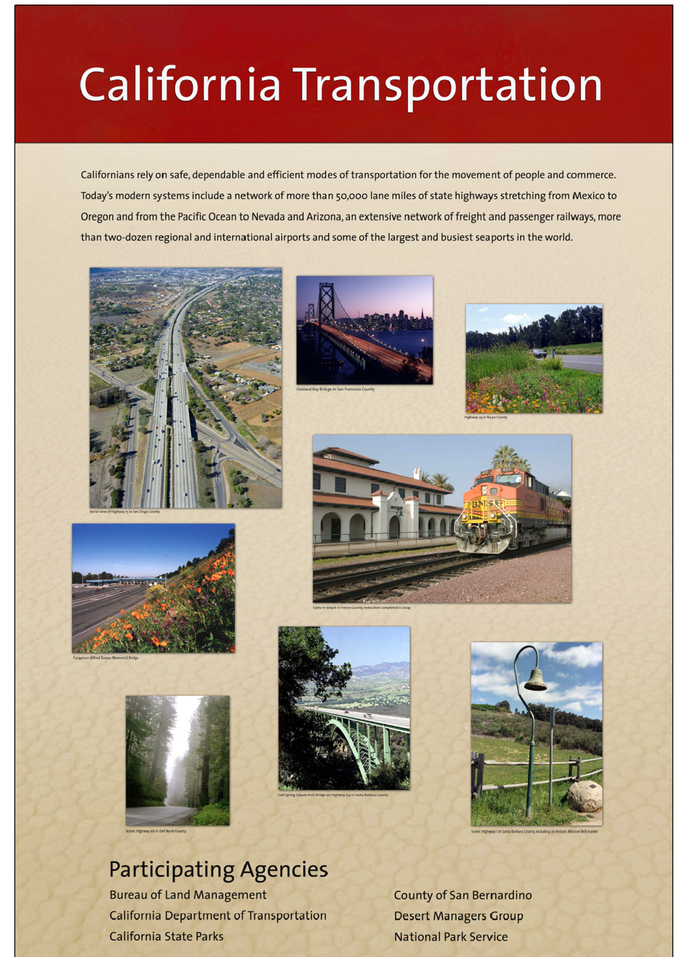

LOWER SIGN PANEL

CONSTRUCTION DETAILS
VERTICAL SIGN PANELS - 5B
NO SCALE

C-21

STATE OF CALIFORNIA - DEPARTMENT OF TRANSPORTATION
Caltrans® LANDSCAPE ARCHITECTURE

SENIOR LANDSCAPE ARCHITECT
MICHAEL BABICH

CALCULATED-DESIGNED BY MARIA I. ARIAS
CHECKED BY MICHAEL M. BABICH

REVISED BY
DATE REVISED

LAST REVISION 02-01-10
DATE PLOTTED => 08-SEP-2010
TIME PLOTTED => 09:28

Dist	COUNTY	ROUTE	POST MILES TOTAL PROJECT	SHEET No.	TOTAL SHEETS
08	SBd	15	160.9/161.5	28	53

Michael M. Babich 3-16-10
LICENSED LANDSCAPE ARCHITECT

5-10-10
PLANS APPROVAL DATE

LICENSED LANDSCAPE ARCHITECT M. M. BABICH 4023 Signature 02-28-10 Renewal Date 03-16-10 Date STATE OF CALIFORNIA

THE STATE OF CALIFORNIA OR ITS OFFICERS OR AGENTS SHALL NOT BE RESPONSIBLE FOR THE ACCURACY OR COMPLETENESS OF SCANNED COPIES OF THIS PLAN SHEET.

LEGEND

(#) THEME SIGN PANEL No. (SEE L-5 FOR LOCATION)

[X] LARGE SIGN PANEL No. (SEE L-5 FOR LOCATION)

36"

48"

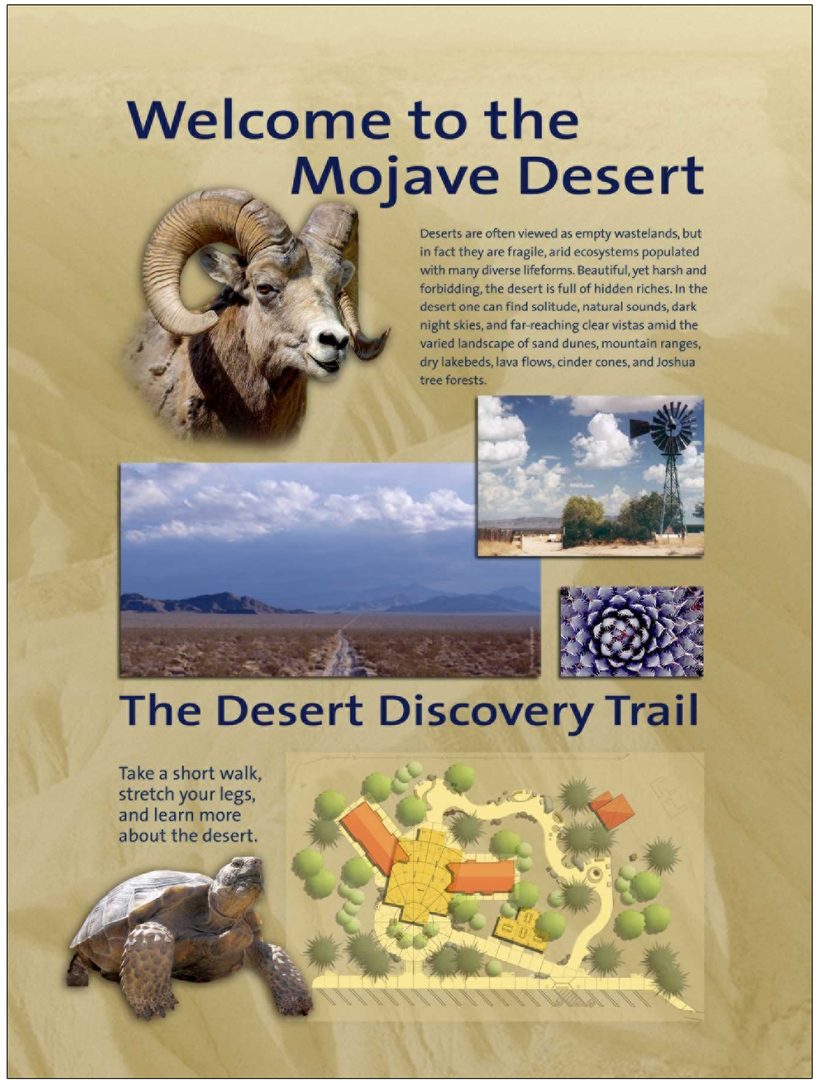

(1)(4)

THEME SIGN PANEL

36"

24"

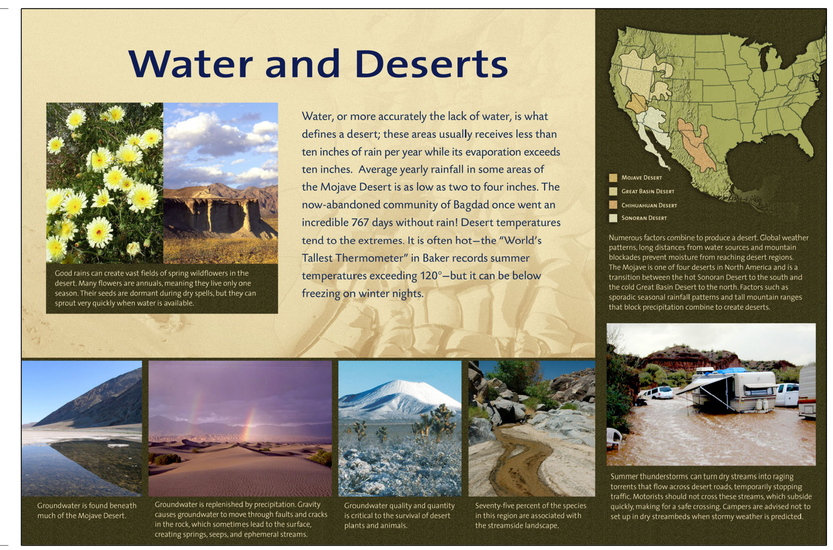

[A]

LARGE SIGN PANEL

CONSTRUCTION DETAILS
THEME AND LARGE SIGN PANELS

NO SCALE

C-22

STATE OF CALIFORNIA - DEPARTMENT OF TRANSPORTATION
Caltrans® LANDSCAPE ARCHITECTURE

SENIOR LANDSCAPE ARCHITECT: MICHAEL BABICH

CALCULATED-DESIGNED BY: MARIA I. ARIAS
CHECKED BY: MICHAEL M. BABICH

REVISED BY
DATE REVISED

LAST REVISION 03-16-10
DATE PLOTTED => 08-SEP-2010
TIME PLOTTED => 09:28

Dist	COUNTY	ROUTE	POST MILES TOTAL PROJECT	SHEET No.	TOTAL SHEETS
08	SBd	15	160.9/161.5	29	53

Michael M. Babich 2-01-10
LICENSED LANDSCAPE ARCHITECT

5-10-10
PLANS APPROVAL DATE

LICENSED LANDSCAPE ARCHITECT M. M. BABICH 4023 Signature 02-28-10 Renewal Date 02-01-10 Date STATE OF CALIFORNIA

THE STATE OF CALIFORNIA OR ITS OFFICERS OR AGENTS SHALL NOT BE RESPONSIBLE FOR THE ACCURACY OR COMPLETENESS OF SCANNED COPIES OF THIS PLAN SHEET.

36"

48"

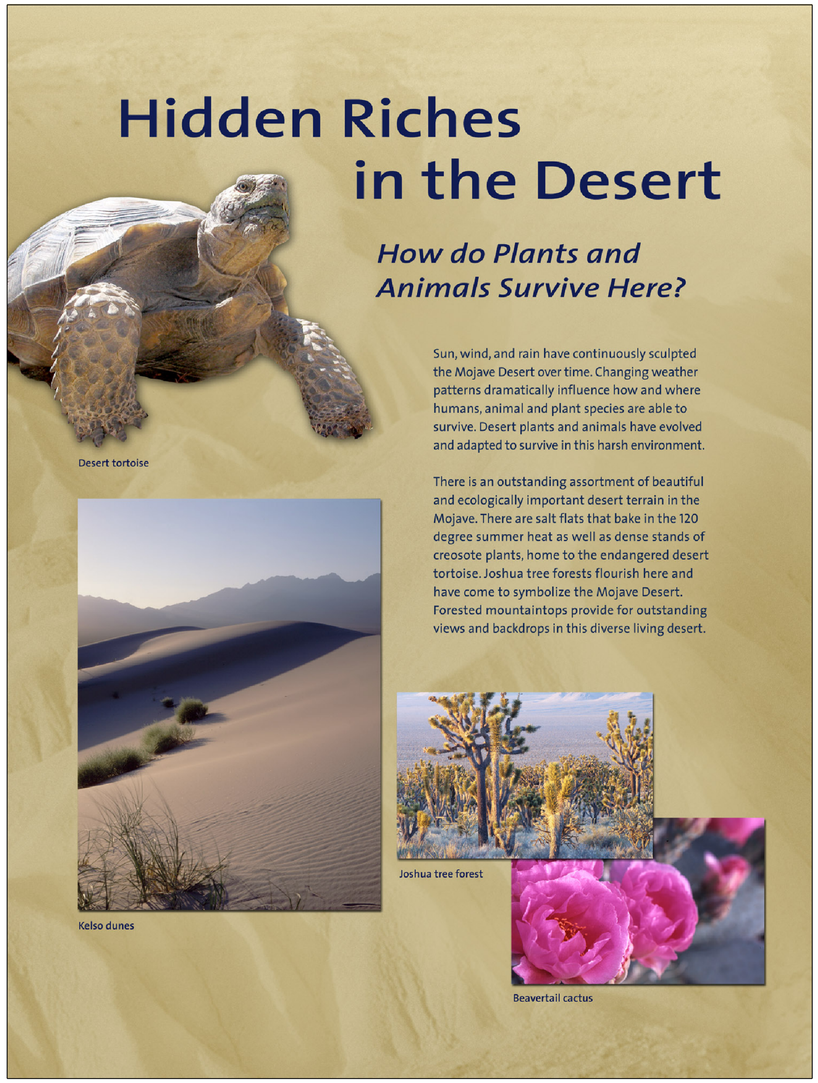

2

THEME SIGN PANEL

36"

24"

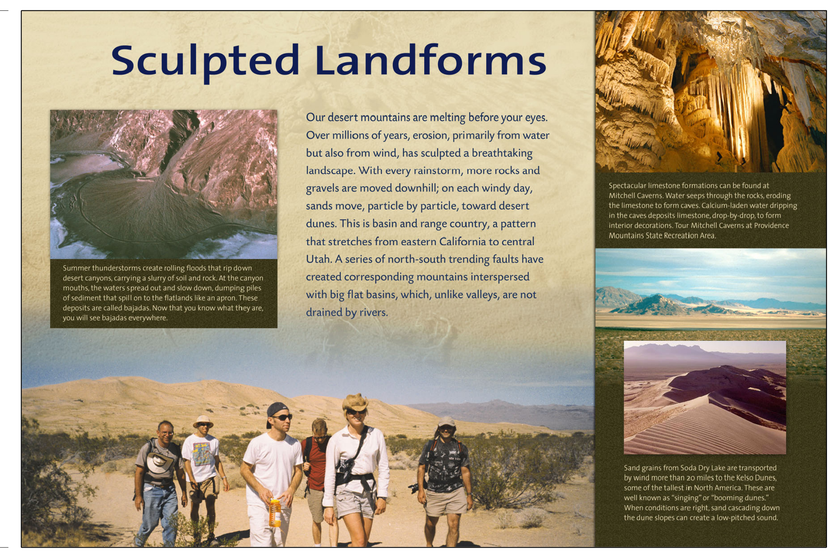

B

LARGE SIGN PANEL

CONSTRUCTION DETAILS
THEME AND LARGE SIGN PANELS
NO SCALE

C-23

STATE OF CALIFORNIA - DEPARTMENT OF TRANSPORTATION
Caltrans® LANDSCAPE ARCHITECTURE

SENIOR LANDSCAPE ARCHITECT: MICHAEL BABICH
CALCULATED-DESIGNED BY: MARIA I. ARIAS
CHECKED BY: MICHAEL M. BABICH
REVISED BY
DATE REVISED

LAST REVISION 02-01-10
DATE PLOTTED => 08-SEP-2010
TIME PLOTTED => 09:28

Dist	COUNTY	ROUTE	POST MILES TOTAL PROJECT	SHEET No.	TOTAL SHEETS
08	SBd	15	160.9/161.5	30	53

Michael M. Babich 2-01-10
LICENSED LANDSCAPE ARCHITECT

5-10-10
PLANS APPROVAL DATE

LICENSED LANDSCAPE ARCHITECT M. M. BABICH 4023 Michael M. Babich Signature 02-28-10 Renewal Date 02-01-10 Date STATE OF CALIFORNIA

THE STATE OF CALIFORNIA OR ITS OFFICERS OR AGENTS SHALL NOT BE RESPONSIBLE FOR THE ACCURACY OR COMPLETENESS OF SCANNED COPIES OF THIS PLAN SHEET.

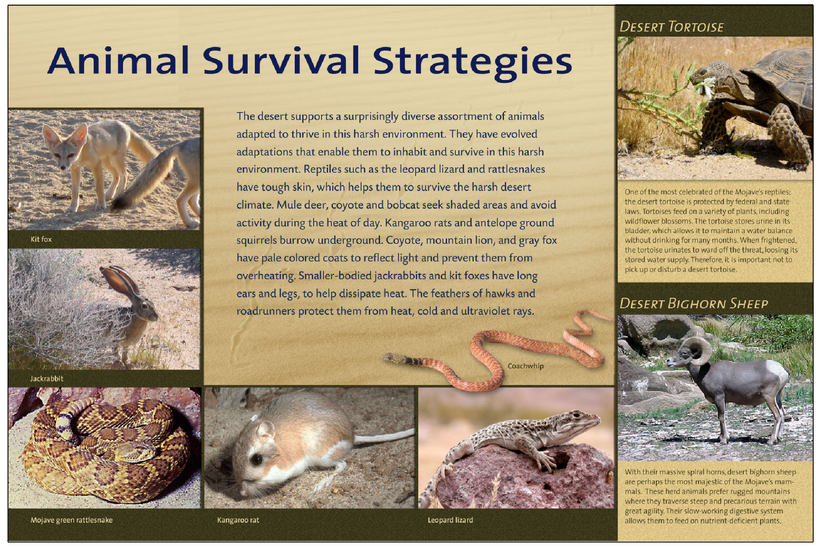

C

36" Typ

24" Typ

D

LARGE SIGN PANEL

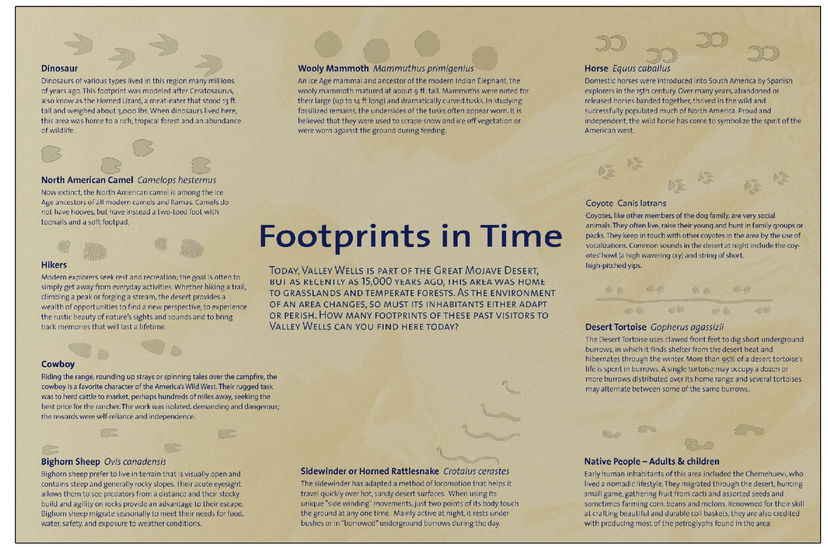

J K

CONSTRUCTION DETAILS
LARGE SIGN PANELS
NO SCALE

C-24

STATE OF CALIFORNIA - DEPARTMENT OF TRANSPORTATION
Caltrans® LANDSCAPE ARCHITECTURE
SENIOR LANDSCAPE ARCHITECT MICHAEL BABICH
CALCULATED-DESIGNED BY MARIA I. ARIAS
CHECKED BY MICHAEL M. BABICH
REVISED BY
DATE REVISED

LAST REVISION 02-01-10
DATE PLOTTED => 08-SEP-2010
TIME PLOTTED => 09:29

Dist	COUNTY	ROUTE	POST MILES TOTAL PROJECT	SHEET No.	TOTAL SHEETS
08	SBd	15	160.9/161.5	31	53

Michael M. Babich 2-01-10
LICENSED LANDSCAPE ARCHITECT

5-10-10
PLANS APPROVAL DATE

LICENSED LANDSCAPE ARCHITECT
M. M. BABICH 4023
Michael M. Babich
Signature
02-28-10
Renewal Date
02-01-10
Date
STATE OF CALIFORNIA

THE STATE OF CALIFORNIA OR ITS OFFICERS OR AGENTS SHALL NOT BE RESPONSIBLE FOR THE ACCURACY OR COMPLETENESS OF SCANNED COPIES OF THIS PLAN SHEET.

36"

48"

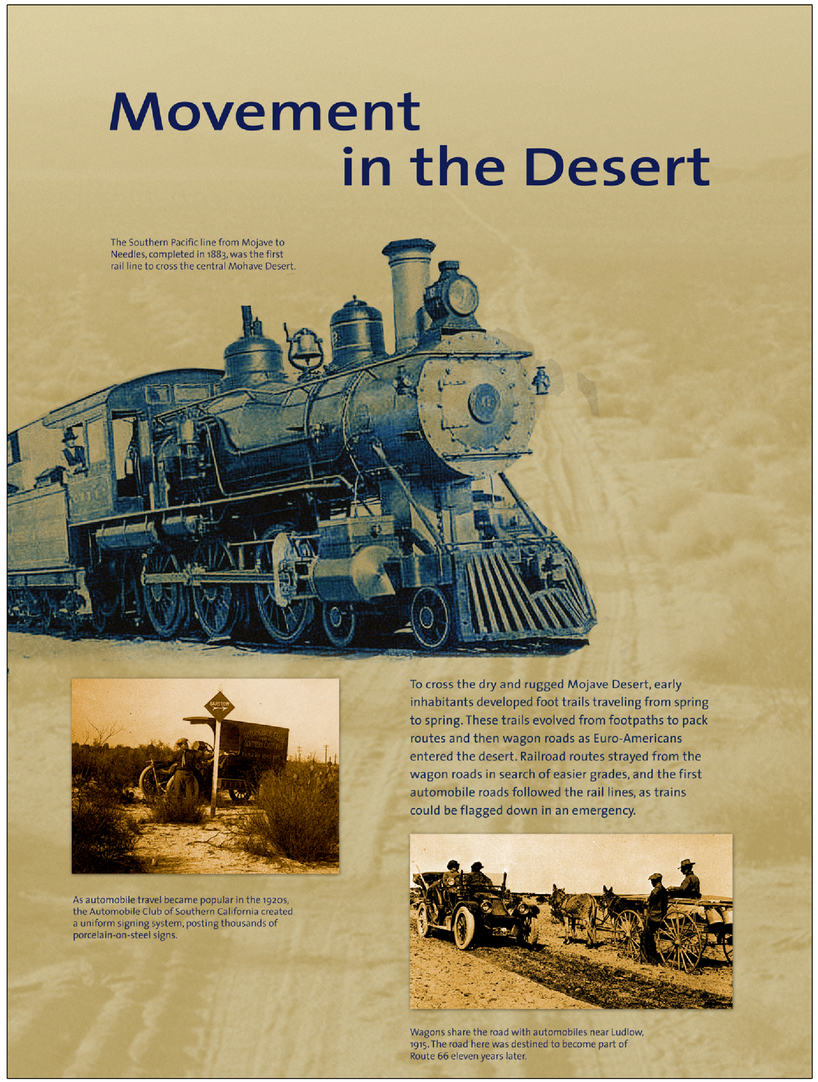

3

THEME SIGN PANEL

36"

24"

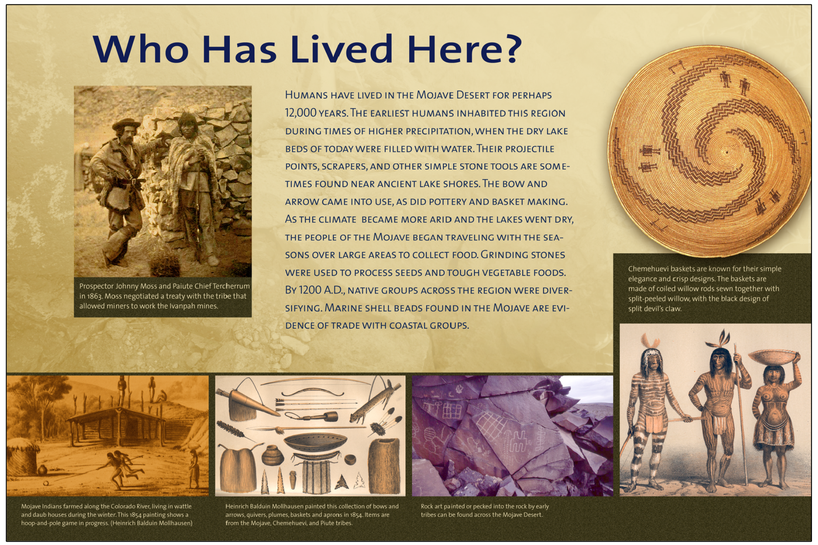

E

LARGE SIGN PANEL

CONSTRUCTION DETAILS
THEME AND LARGE SIGN PANELS
NO SCALE

C-25

STATE OF CALIFORNIA - DEPARTMENT OF TRANSPORTATION
Caltrans® LANDSCAPE ARCHITECTURE

SENIOR LANDSCAPE ARCHITECT: MICHAEL BABICH

CALCULATED-DESIGNED BY: MARIA I. ARIAS
CHECKED BY: MICHAEL M. BABICH

REVISED BY
DATE REVISED

LAST REVISION 02-01-10
DATE PLOTTED => 08-SEP-2010
TIME PLOTTED => 09:29

Dist	COUNTY	ROUTE	POST MILES TOTAL PROJECT	SHEET No.	TOTAL SHEETS
08	SBd	15	160.9/161.5	32	53

Michael M. Babich 2-01-10
LICENSED LANDSCAPE ARCHITECT

5-10-10
PLANS APPROVAL DATE

LICENSED LANDSCAPE ARCHITECT M. M. BABICH 4023 Signature 02-28-10 Renewal Date 02-01-10 Date STATE OF CALIFORNIA

THE STATE OF CALIFORNIA OR ITS OFFICERS OR AGENTS SHALL NOT BE RESPONSIBLE FOR THE ACCURACY OR COMPLETENESS OF SCANNED COPIES OF THIS PLAN SHEET.

Western Expansion

Map drawn from Father Garces' diary of his journey across the Mojave Desert.

In 1776, while Spain was establishing missions in California, Father Garces became the first known European to travel along Indian trails here. Mojave Indians helped guide Garces west to the San Gabriel Mission. In 1826, famed trapper and explorer Jedediah Smith crossed the desert, followed by other trappers and settlers. The discovery of gold in eastern California, Nevada and Arizona in the mid 1800s led to the development of wagon routes across the desert and changed this area forever.

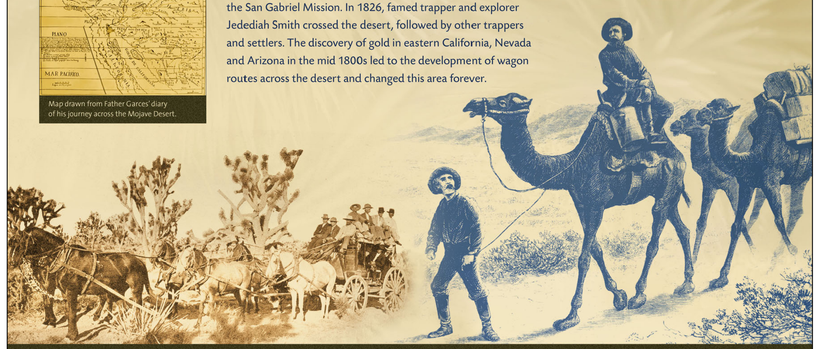

The Old Spanish Trail, a major trade route between Los Angeles and Santa Fe, followed near the route of Interstate 15 between here and Los Angeles. Many other short-haul routes developed after the turn of the last century. This stagecoach traveled between Nipton, California and Searchlight, Nevada.

Would camels work as pack animals in western deserts? In 1857, they were put to the test during a survey for a wagon road from New Mexico to the Colorado River. Edward F. Beale, who led the camel expedition, found them to be superior to other pack animals, but the teamsters who handled the animals thought they were aggressive and caused horses and mules to panic. With Civil War politics intervening, the camel project soon ended.

F

Railroads Revolutionize Transportation

The Kelso Depot was one of several train stations built by the Union Pacific Railroad in the early 1920s. Although these stations were all built at remote desert locations, the UP designed them in the ornate Spanish Mission Revival Style to compete with the Santa Fe Railroad's Harvey Houses. Today the Kelso Depot serves as the Visitor Center for Mojave National Preserve.

By the late 1800s, transcontinental railroads were uniting the nation. The Southern Pacific was the first to cross the Mojave Desert in 1883. Train routes provided economical transportation for raw materials like minerals and cattle to larger markets such as Los Angeles. Short lines developed, creating a web of routes serving remote desert valleys.

Abandoned boxcar from the Tidewater and Tonopah, a short line connecting mines in the Beatty, Nevada area with the Southern Pacific Railroad at Ludlow, California from around 1906 to 1940.

First train into Daggett on the Southern Pacific, 1883.

Kelso was a company town, and a one-room school served residents until 1975.

Steam locomotive leaves Lanfair on the California Eastern, in operation from 1895 until 1902.

H

Ranching and Mining

Dry land farmers homesteaded the high valleys of the east Mojave during the 1910s-40s. Homesteader Harry Trehern built this store in Nipton to serve homesteaders, Trehearne, and ranchers.

Gold and silver discoveries during the mid-1800s brought hundreds of prospectors trekking across the eastern Mojave. Ephemeral camps sprang up throughout the desert as miners discovered copper and silver in nearby mountains. Ranchers moving into high, grassy valleys, exploited the market for beef created by the miners, and soon developed commercial operations. The Southern Pacific Railway crossed the Mojave in 1883, giving ranchers access to larger markets east and west, and their operations expanded. Ranching and mining continue today.

Mule team hauling ore to smelter at Valley Wells from Copper World Mine, circa 1900.

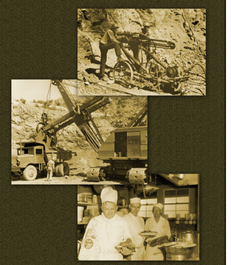
During World War II, Kaiser operated the Vulcan Mine in the Providence Mountains. Iron ore from the mine was used to make steel for Liberty Ships crucial to the war effort. **Top:** Miners use a drill to create a hole for blasting. **Middle:** Ore was trucked nine miles to Kelso where it was loaded onto trains for shipment to a Fontana, California steel mill. **Bottom:** Cooks at the Vulcan mine.

Water tank for the OX cattle Company on Lanfair Road.

Cowboys of the Rock Springs Land & Cattle Company, the biggest operation in the east Mojave until it broke up around 1930.

G

Modern Highways

Hotels like this one in Amboy, California were packed with travelers in the 1950's. When Interstate 40 between Needles and Barstow opened in 1973, business at Amboy dried up.

Cars completed the transportation revolution. Two lane roads like Route 66 and the Arrowhead Highway (road that Interstate 15 replaced) crossed the Mojave, and connected with a network of often dirt roads that gave motorized access to the desert. These two lane roads could be dangerous. Since then, much time, planning and resources have gone into making travel through the Mojave Desert a safe and enjoyable experience for motorists.

Early travelers in the desert, like this young man, had to be prepared for anything.

This early facility in Baker provided services for the traveler. Notice the burros in front of the bus.

"I had three big wreckers. We had a average of three wrecks a day. The roads weren't marked, and all the bridges was blind, so there were head on collisions all the time. The bridge rails were made with eight-by-eight redwood; the'd run right through the radiator, up the side of the motor, through the firewall, and through the driver – pin him right to his seat. We'd have to cut him out with a handsaw."

– Buster Burris, Roy's Cafe, Amboy

I

LARGE SIGN PANEL

CONSTRUCTION DETAILS
LARGE SIGN PANELS
NO SCALE

C-26

24" Typ

36" Typ

STATE OF CALIFORNIA - DEPARTMENT OF TRANSPORTATION
Caltrans® LANDSCAPE ARCHITECTURE

SENIOR LANDSCAPE ARCHITECT: MICHAEL BABICH
CALCULATED-DESIGNED BY: MARIA I. ARIAS
CHECKED BY: MICHAEL M. BABICH
REVISED BY
DATE REVISED

LAST REVISION 02-01-10
DATE PLOTTED => 08-SEP-2010
TIME PLOTTED => 09:30

Dist	COUNTY	ROUTE	POST MILES TOTAL PROJECT	SHEET No.	TOTAL SHEETS
08	SBd	15	160.9/161.5	33	53

Michael M. Babich 2-01-10
LICENSED LANDSCAPE ARCHITECT

5-10-10
PLANS APPROVAL DATE

LICENSED LANDSCAPE ARCHITECT M. M. BABICH 4023 STATE OF CALIFORNIA
Signature 02-28-10 Renewal Date 02-01-10 Date

THE STATE OF CALIFORNIA OR ITS OFFICERS OR AGENTS SHALL NOT BE RESPONSIBLE FOR THE ACCURACY OR COMPLETENESS OF SCANNED COPIES OF THIS PLAN SHEET.

LEGEND

XX SMALL SIGN PANEL No., (SEE L-1 FOR LOCATION).

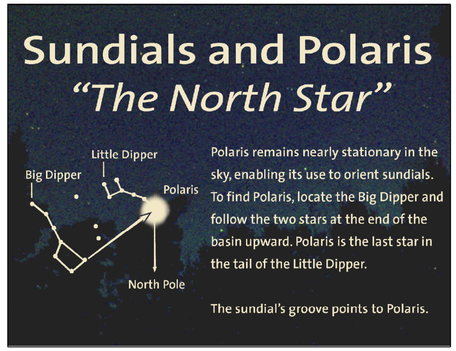

aa

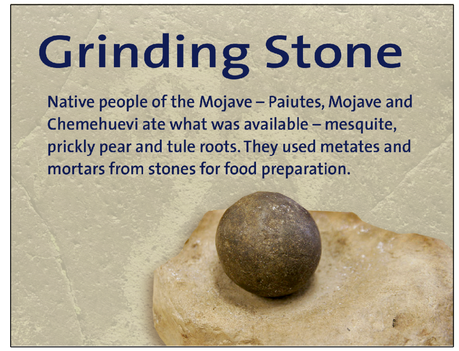

bb

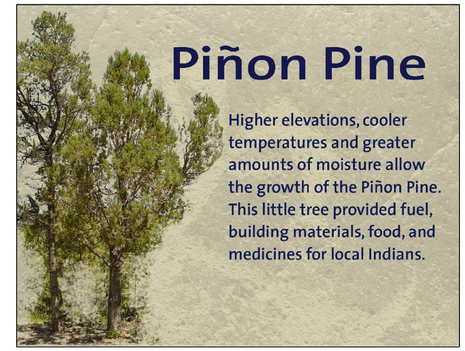

cc

dd

ee

ff

11" Typ

8 1/2" Typ

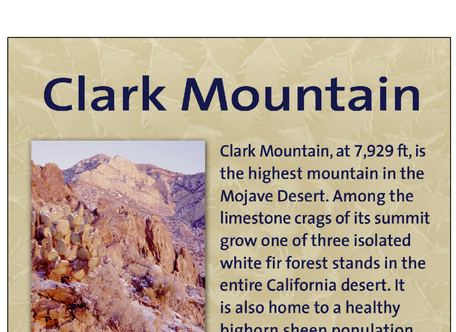

gg (2 panels)

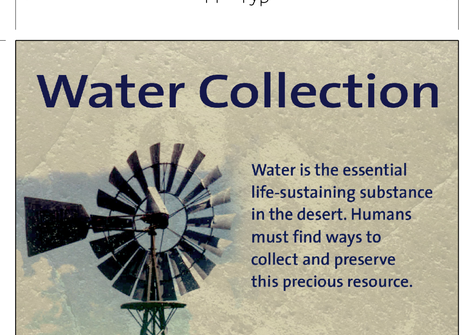

hh

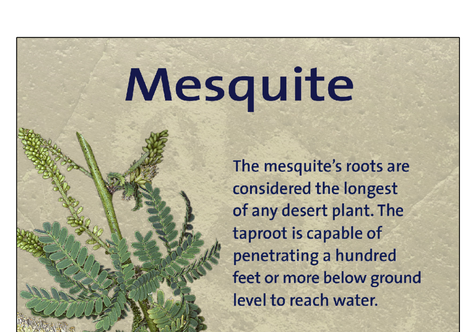

ii

SMALL SIGN PANEL

CONSTRUCTION DETAILS
SMALL SIGN PANELS
NO SCALE

C-27

STATE OF CALIFORNIA - DEPARTMENT OF TRANSPORTATION
Caltrans LANDSCAPE ARCHITECTURE
SENIOR LANDSCAPE ARCHITECT MICHAEL BABICH
CALCULATED-DESIGNED BY MARIA I. ARIAS
CHECKED BY MICHAEL M. BABICH
REVISED BY
DATE REVISED

LAST REVISION 02-01-10 | DATE PLOTTED => 08-SEP-2010 TIME PLOTTED => 09:30

Dist	COUNTY	ROUTE	POST MILES TOTAL PROJECT	SHEET No.	TOTAL SHEETS
08	SBd	15	160.9/161.5	34	53

Michael M. Babich 2-01-10
LICENSED LANDSCAPE ARCHITECT

5-10-10
PLANS APPROVAL DATE

LICENSED LANDSCAPE ARCHITECT M. M. BABICH 4053 Michael M. Babich Signature 02-28-10 Renewal Date 02-01-10 Date STATE OF CALIFORNIA

THE STATE OF CALIFORNIA OR ITS OFFICERS OR AGENTS SHALL NOT BE RESPONSIBLE FOR THE ACCURACY OR COMPLETENESS OF SCANNED COPIES OF THIS PLAN SHEET.

NOTE:

1. SEE SHEET C-9 FOR REPLICA HIGHWAY SIGN LAYOUT AND POST DETAIL.

SPEED LIMIT (2 PANELS) 1

ROUTE SHIELD (4 PANELS) 2

STATE LINE (1 PANEL) 3

MILEAGES (1 PANEL) 3

LOCATE THE SIGN SO THAT DIRECTIONAL ARROWS ARE ORIENTED TO THE ACCURATE DIRECTION IN RELATION TO I-15

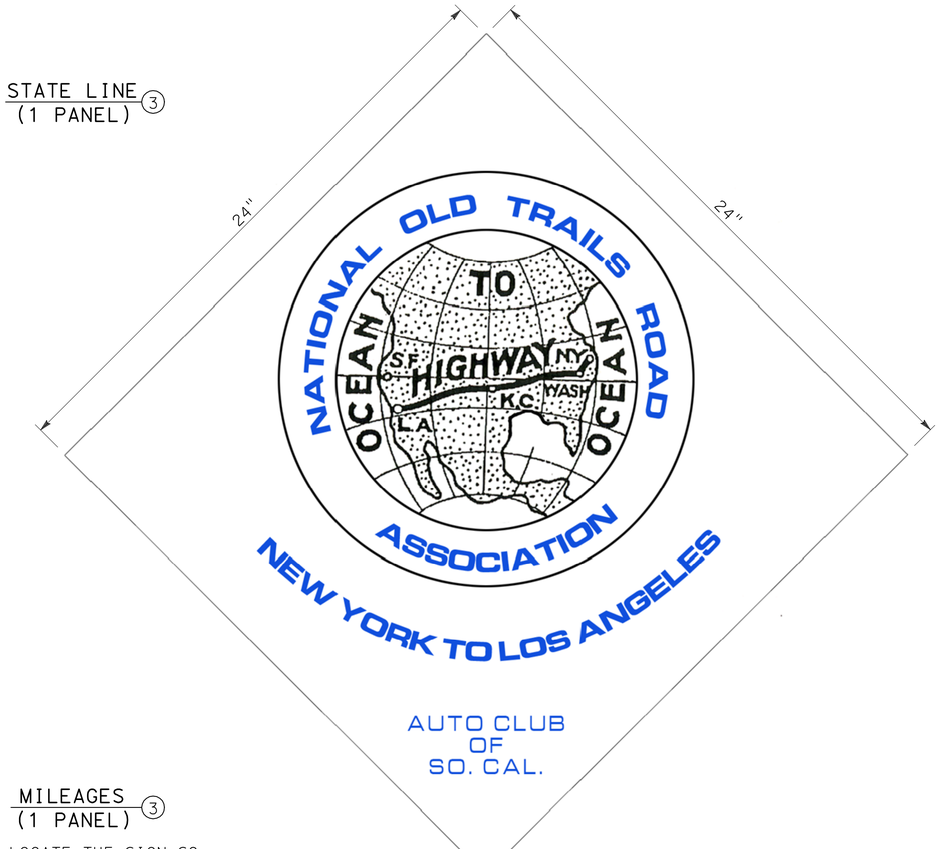

NY TO LA (2 PANELS) 4

REPLICA HIGHWAY SIGNS

CONSTRUCTION DETAILS
REPLICA HIGHWAY SIGN PANELS

NO SCALE

C-28

STATE OF CALIFORNIA - DEPARTMENT OF TRANSPORTATION
Caltrans LANDSCAPE ARCHITECTURE

SENIOR LANDSCAPE ARCHITECT: MICHAEL BABICH
CALCULATED-DESIGNED BY: MARIA I. ARIAS
CHECKED BY: MICHAEL M. BABICH
REVISED BY
DATE REVISED

LAST REVISION 02-01-10
DATE PLOTTED => 08-SEP-2010
TIME PLOTTED => 09:31

Dist	COUNTY	ROUTE	POST MILES TOTAL PROJECT	SHEET No.	TOTAL SHEETS
08	SBd	15	160.9/161.5	35	53

Michael M. Babich 4-27-10
LICENSED LANDSCAPE ARCHITECT

5-10-10
PLANS APPROVAL DATE

LICENSED LANDSCAPE ARCHITECT M. M. BABICH 4-27-10 Signature 02-28-12 Renewal Date 04-27-10 Date STATE OF CALIFORNIA

THE STATE OF CALIFORNIA OR ITS OFFICERS OR AGENTS SHALL NOT BE RESPONSIBLE FOR THE ACCURACY OR COMPLETENESS OF SCANNED COPIES OF THIS PLAN SHEET.

NOTE:

1. DOWEL BARS TO BE FIELD CUT TO FIT AESTHETIC PATTERN

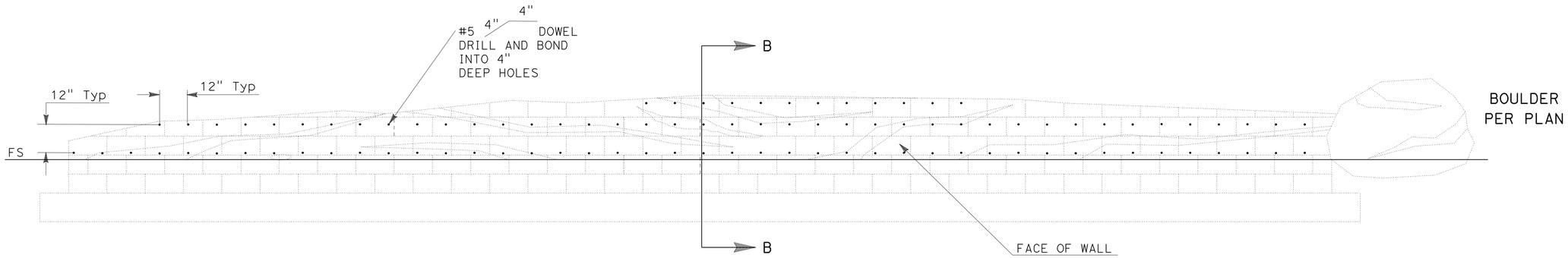

ELEVATION

RETAINING WALL (TYPE 6B) DOWELING PATTERN

SCALE: 1" = 20'

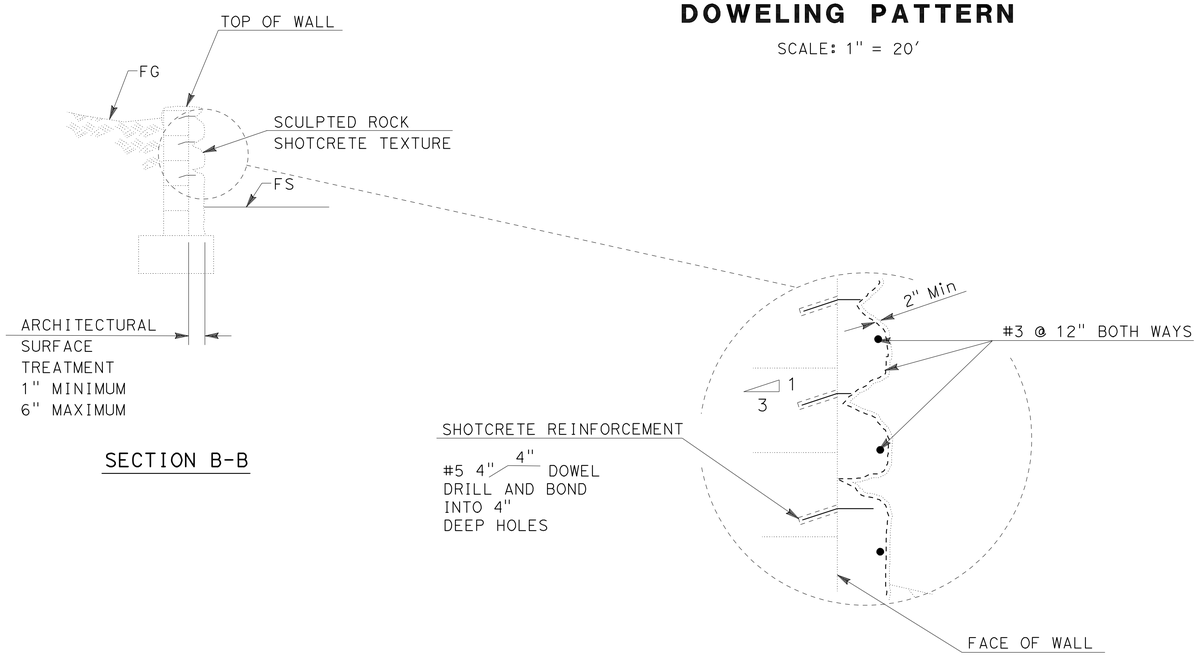

SECTION B-B

CONSTRUCTION DETAILS
RETAINING WALL (TYPE 6B)

SCALE AS SHOWN

C-29

STATE OF CALIFORNIA - DEPARTMENT OF TRANSPORTATION
Caltrans LANDSCAPE ARCHITECTURE

SENIOR LANDSCAPE ARCHITECT: MICHAEL BABICH

CALCULATED-DESIGNED BY: MARIA I. ARIAS
CHECKED BY: MICHAEL M. BABICH
REVISED BY
DATE REVISED

LAST REVISION 04-27-10
DATE PLOTTED => 08-SEP-2010
TIME PLOTTED => 09:31

Dist	COUNTY	ROUTE	POST MILES TOTAL PROJECT	SHEET No.	TOTAL SHEETS
08	SBd	15	160.9/161.5	36	53

REGISTERED CIVIL ENGINEER — DATE 2-01-10

5-10-10
PLANS APPROVAL DATE

REGISTERED PROFESSIONAL ENGINEER
DUNG HUY PHAN
No. C 73061
Exp. 12/30/10
CIVIL
STATE OF CALIFORNIA

THE STATE OF CALIFORNIA OR ITS OFFICERS OR AGENTS SHALL NOT BE RESPONSIBLE FOR THE ACCURACY OR COMPLETENESS OF SCANNED COPIES OF THIS PLAN SHEET.

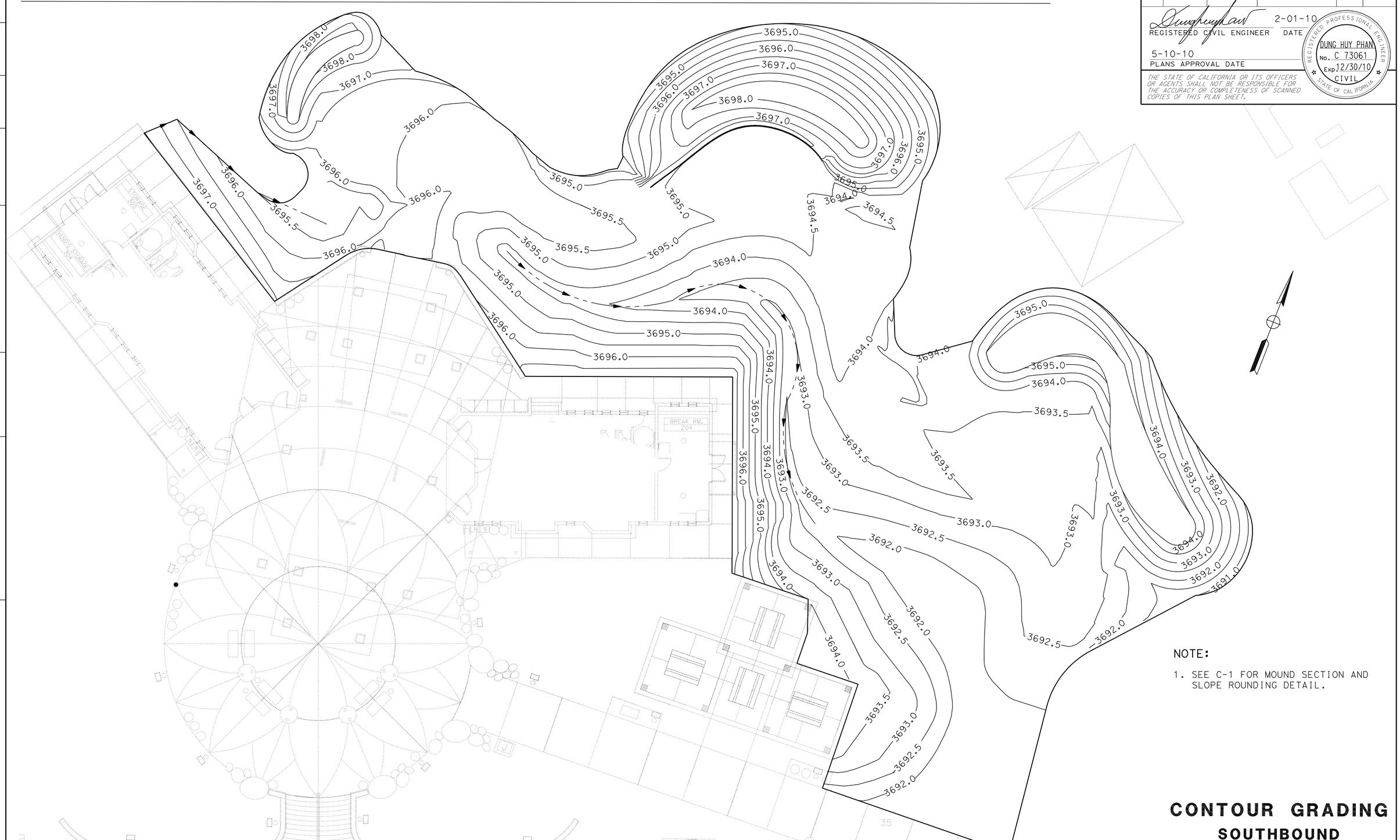

NOTE:

1. SEE C-1 FOR MOUND SECTION AND SLOPE ROUNDING DETAIL.

CONTOUR GRADING
SOUTHBOUND

SCALE 1" = 10'

THIS PLAN ACCURATE FOR CONTOUR GRADING WORK ONLY

G-1

REVISED BY	DATE REVISED
DUNG HUY PHAN	RONNY DANG
CALCULATED-DESIGNED BY	CHECKED BY
FUNCTIONAL SUPERVISOR	RENEE SASSE

STATE OF CALIFORNIA - DEPARTMENT OF TRANSPORTATION
Caltrans® DESIGN DIVISION

LAST REVISION 02-01-10 | DATE PLOTTED => 08-SEP-2010 | TIME PLOTTED => 09:31

Dist	COUNTY	ROUTE	POST MILES TOTAL PROJECT	SHEET No.	TOTAL SHEETS
08	SBd	15	160.9/161.5	37	53

REGISTERED CIVIL ENGINEER 5-4-10 DATE

5-10-10
PLANS APPROVAL DATE

REGISTERED PROFESSIONAL ENGINEER
DUNG HUY PHAN
No. C 73061
Exp 12/30/10
CIVIL
STATE OF CALIFORNIA

THE STATE OF CALIFORNIA OR ITS OFFICERS OR AGENTS SHALL NOT BE RESPONSIBLE FOR THE ACCURACY OR COMPLETENESS OF SCANNED COPIES OF THIS PLAN SHEET.

NOTE

1. PLEASE SEE ELECTRICAL SHEET FOR ADDITIONAL ELECTRICAL INFORMATION.

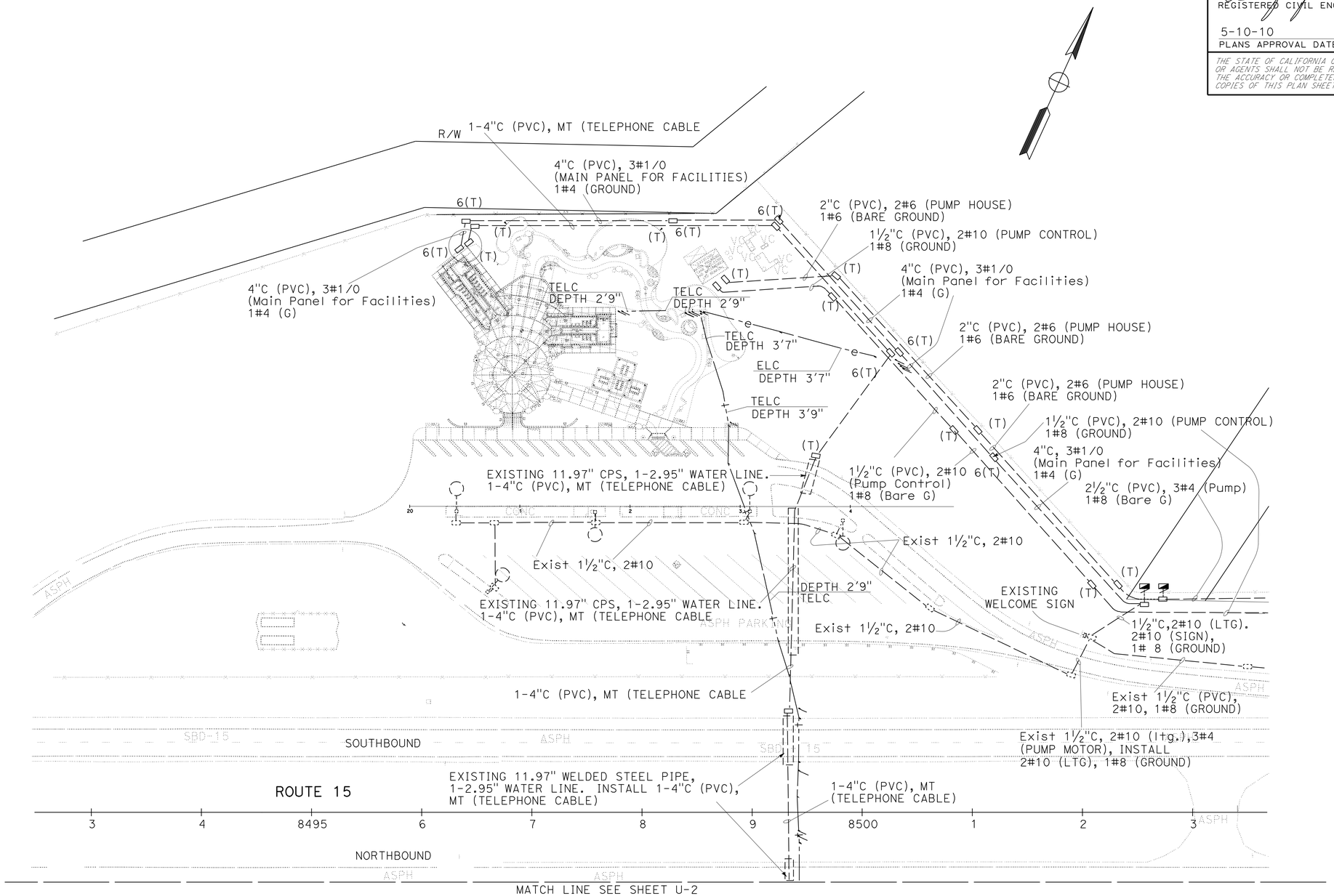

UTILITY PLAN

SCALE: 1" = 50'

U-1

THIS PLAN ACCURATE FOR UTILITY INFORMATION ONLY

STATE OF CALIFORNIA - DEPARTMENT OF TRANSPORTATION
Caltrans® DESIGN DIVISION

FUNCTIONAL SUPERVISOR: RENEE SASSE
CALCULATED-DESIGNED BY: DUNG HUY PHAN
CHECKED BY: RONNY DANG
REVISED BY
DATE REVISED

LAST REVISION 05-04-10
DATE PLOTTED => 08-SEP-2010
TIME PLOTTED => 09:31

BORDER LAST REVISED 4/11/2008
RELATIVE BORDER SCALE IS IN INCHES 0 1 2 3
USERNAME => trlenard
DGN FILE => 80A641ka001.dgn
CU 08341
EA 0A6411

Dist	COUNTY	ROUTE	POST MILES TOTAL PROJECT	SHEET No.	TOTAL SHEETS
08	SBd	15	160.9/161.5	38	53

REGISTERED CIVIL ENGINEER 5-4-10 DATE

5-10-10
PLANS APPROVAL DATE

REGISTERED PROFESSIONAL ENGINEER
DUNG HUY PHAN
No. C 73061
Exp 12/30/10
CIVIL
STATE OF CALIFORNIA

THE STATE OF CALIFORNIA OR ITS OFFICERS OR AGENTS SHALL NOT BE RESPONSIBLE FOR THE ACCURACY OR COMPLETENESS OF SCANNED COPIES OF THIS PLAN SHEET.

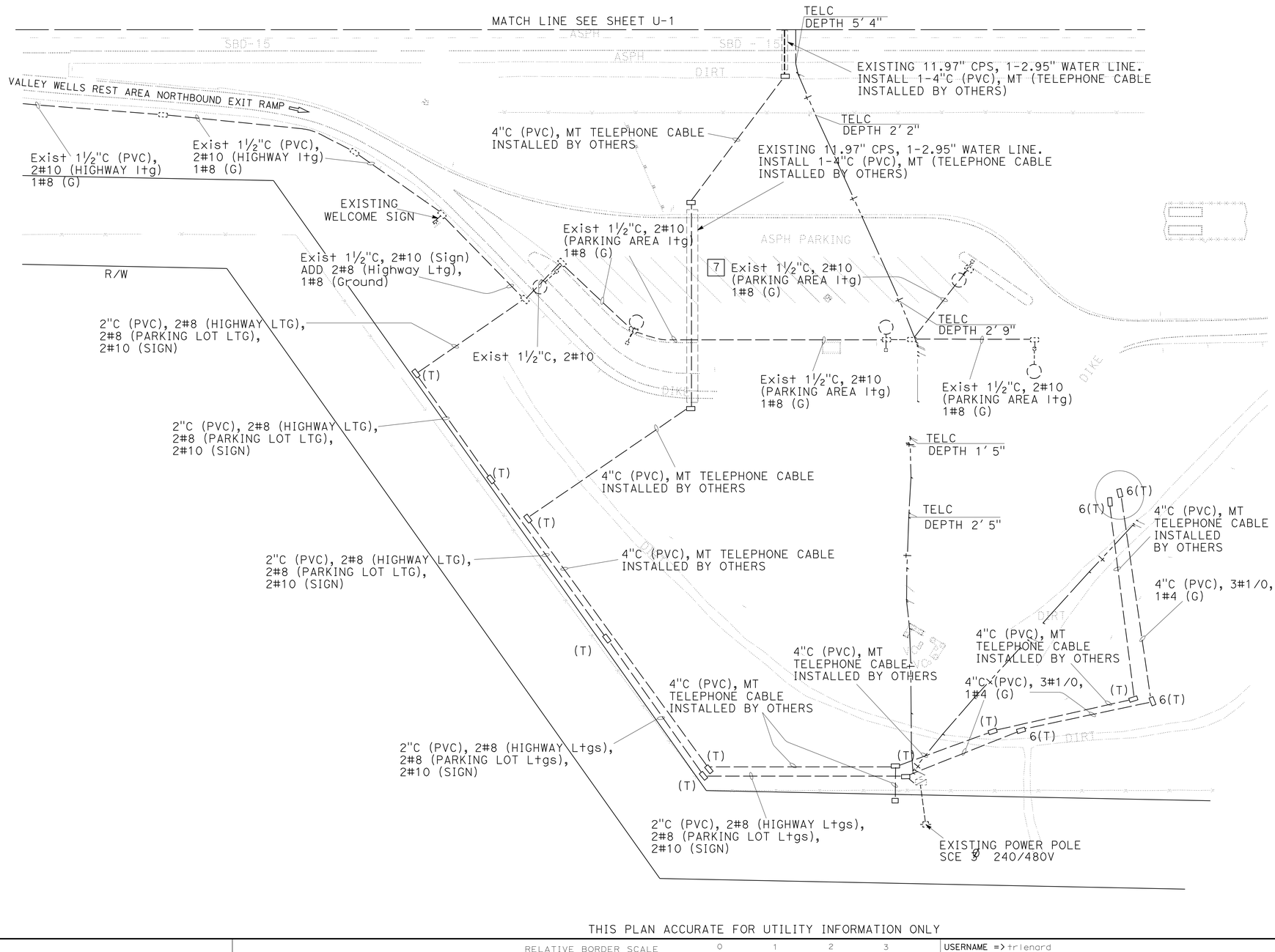

THIS PLAN ACCURATE FOR UTILITY INFORMATION ONLY

UTILITY PLAN

SCALE: 1" = 50'

U-2

STATE OF CALIFORNIA - DEPARTMENT OF TRANSPORTATION
Caltrans DESIGN DIVISION

FUNCTIONAL SUPERVISOR: RENEE SASSE
CALCULATED-DESIGNED BY: DUNG HUY PHAN
CHECKED BY: RONNY DANG
REVISED BY
DATE REVISED

LAST REVISION 05-04-10
DATE PLOTTED => 08-SEP-2010
TIME PLOTTED => 09:31

Dist	COUNTY	ROUTE	POST MILES TOTAL PROJECT	SHEET No.	TOTAL SHEETS
08	SBd	15	160.9/161.5	39	53

REGISTERED CIVIL ENGINEER — DATE 2-01-10

5-10-10
PLANS APPROVAL DATE

REGISTERED PROFESSIONAL ENGINEER — TRAN HOANG — No. 54996 — Exp. 6/30/10 — CIVIL — STATE OF CALIFORNIA

THE STATE OF CALIFORNIA OR ITS OFFICERS OR AGENTS SHALL NOT BE RESPONSIBLE FOR THE ACCURACY OR COMPLETENESS OF SCANNED COPIES OF THIS PLAN SHEET.

NOTE:

1. LOCATIONS OF CONSTRUCTION AREA SIGNS ARE APPROXIMATE. EXACT LOCATIONS OF THE CONSTRUCTION AREA SIGNS WILL BE DETERMINED BY THE ENGINEER.

LEGEND

CONSTRUCTION AREA

CONSTRUCTION AREA SIGN (ONE POST)

(X) CONSTRUCTION AREA SIGN LETTER

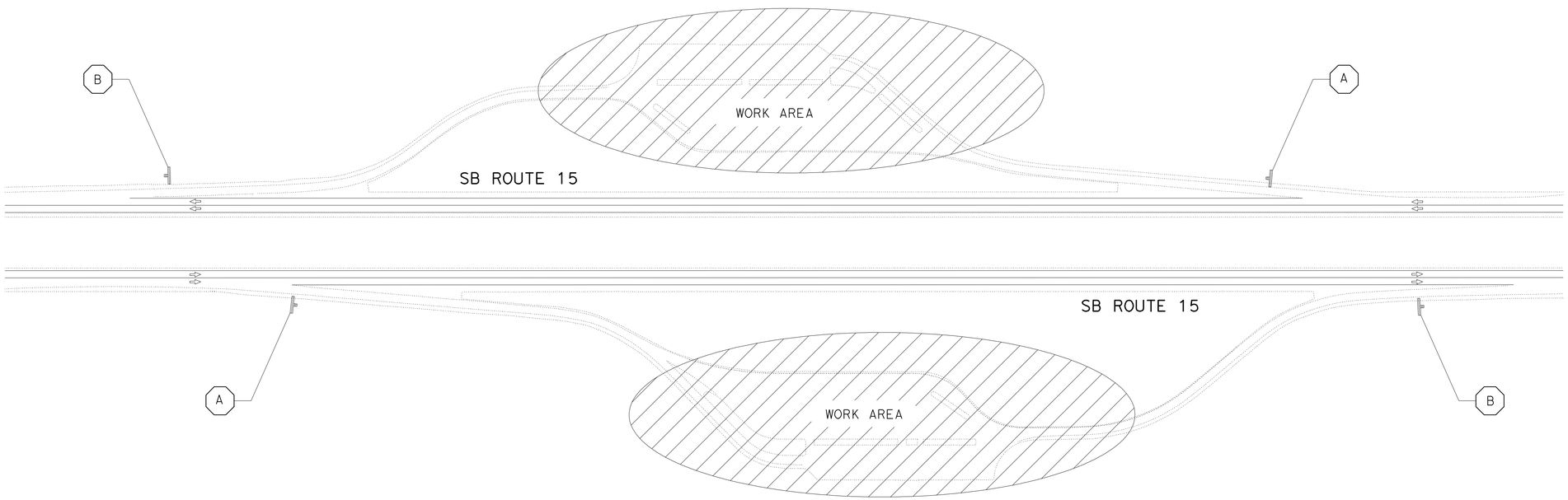

WORK AREAS
IN
NB & SB REST AREAS

CONSTRUCTION AREA SIGNS

SIGN No.	SIGN CODE	PANEL SIZE	SIGN MESSAGE	No. OF POST(S) AND SIZE	No. OF SIGNS (EA)
A	W20-1	36" x 36"	ROAD WORK AHEAD	1 - 4" x 6"	2
B	G20-2	36" x 18"	END ROAD WORK	1 - 4" x 4"	2
				TOTAL	4

THIS PLAN ACCURATE FOR CONSTRUCTION AREA SIGNS ONLY

CONSTRUCTION AREA SIGNS

NO SCALE

CS-1

STATE OF CALIFORNIA - DEPARTMENT OF TRANSPORTATION
Caltrans® TRAFFIC DESIGN

FUNCTIONAL SUPERVISOR: LARRY SARTORI
CALCULATED-DESIGNED BY: DARYUSH NAMI
CHECKED BY: TRAN HOANG
REVISED BY / DATE REVISED

LAST REVISION 02-01-10
DATE PLOTTED => 08-SEP-2010
TIME PLOTTED => 09:31

Dist	COUNTY	ROUTE	POST MILES TOTAL PROJECT	SHEET No.	TOTAL SHEETS
08	SBd	15	160.9/161.5	40	53

REGISTERED CIVIL ENGINEER 3-29-10 DATE

5-10-10
PLANS APPROVAL DATE

REGISTERED PROFESSIONAL ENGINEER JEFFREY FROMHERTZ No. 47295 Exp. 12-31-11 CIVIL STATE OF CALIFORNIA

THE STATE OF CALIFORNIA OR ITS OFFICERS OR AGENTS SHALL NOT BE RESPONSIBLE FOR THE ACCURACY OR COMPLETENESS OF SCANNED COPIES OF THIS PLAN SHEET.

ROADWAY QUANTITIES

LOCATION	IMPORTED BORROW	MINOR CONCRETE (SIDEWALK)	CONTOUR GRADING
	CY		
SHEET G-1	450		150
SHEET L-3		62	
TOTAL	450	62	150

TEMPORARY FENCE QUANTITIES

LOCATION	FENCE
	CY
SHEET L-1	650
TOTAL	650

EROSION CONTROL QUANTITIES

ITEM	UNIT	QUANTITY
EROSION CONTROL (HYDROSEED)	SQFT	10,000
TOTAL		10,000

WATER POLLUTION CONTROL QUANTITIES

ITEM	UNIT	QUANTITY
TEMPORARY CONCRETE WASHOUT	EA	1
TOTAL		1

SUMMARY OF QUANTITIES

Q-1

STATE OF CALIFORNIA - DEPARTMENT OF TRANSPORTATION
Caltrans® DESIGN DIVISION

FUNCTIONAL SUPERVISOR: J. FROMHERTZ

CALCULATED-DESIGNED BY: P. CRUZ
CHECKED BY: J. FROMHERTZ

REVISED BY: P. CRUZ
DATE REVISED: 03/15/10

LAST REVISION 03-29-10
DATE PLOTTED => 08-SEP-2010
TIME PLOTTED => 09:31

Dist	COUNTY	ROUTE	POST MILES TOTAL PROJECT	SHEET No.	TOTAL SHEETS
08	SBd	15	160.9/161.5	41	53

Michael M. Babich 3-29-10
LICENSED LANDSCAPE ARCHITECT

5-10-10
PLANS APPROVAL DATE

LICENSED LANDSCAPE ARCHITECT M. M. BABICH 4023 Signature 02-28-12 Renewal Date 03-29-10 Date STATE OF CALIFORNIA

THE STATE OF CALIFORNIA OR ITS OFFICERS OR AGENTS SHALL NOT BE RESPONSIBLE FOR THE ACCURACY OR COMPLETENESS OF SCANNED COPIES OF THIS PLAN SHEET.

ITEM		BOULDERS (SIZE-7 FT)	BOULDERS (SIZE-5 FT)	BOULDERS (SIZE-3 FT)	IRRIGATION SLEEVE	RETAINING WALL (MASONRY WALL)	INTERNATIONAL SYMBOL OF ACCESSIBILTY METAL SIGN	FABRICATED DESERT IGUANA	FABRICATED WATER VESSEL	MOUNTED WAGON WHEEL
UNIT		EA	EA	EA	LF	LF	EA	EA	EA	EA
SHEET No.	L-1	4	11	25	35	45	2	1	3	1
	L-2	-	-	-	-	-	-	-	-	-
TOTAL		4	11	25	35	45	2	1	3	1

ITEM		VERTICAL SIGN BASE	THEME SIGN BASE	LARGE SIGN BASE	SMALL SIGN BASE	SUNDIAL	TRASH RECEPTACLE	RANCH FENCE	12' CHAIN LINK GATE (TYPE CL-6)	VERTICAL SIGN PANEL
UNIT		EA	EA	EA	EA	EA	EA	LF	EA	EA
SHEET No.	L-1	5	4	10	10	1	6	60	1	20
	L-2	5	-	1	-	-	-	-	-	20
TOTAL		10	4	11	10	1	6	60	1	40

ITEM		THEME SIGN PANEL	LARGE SIGN PANEL	SMALL SIGN PANEL	PRE-FABRICATED METAL BENCH	REPLICA BIGHORN SHEEP	REPLICA DESERT TORTOISE	REPLICA HARE	MANUAL WATER PUMP (NON-FUNCTIONAL)	NON-COIN OPERATED BINOCULARS
UNIT		EA	EA	EA	EA	EA	EA	EA	EA	EA
SHEET No.	L-1	4	10	10	6	1	1	1	1	2
	L-2	-	1	-	-	-	-	-	-	2
TOTAL		4	11	10	6	1	1	1	1	4

SUMMARY OF QUANTITIES

Q-2

REVISED BY | DATE REVISED
MARIA I. ARIAS | MICHAEL M. BABICH
CALCULATED-DESIGNED BY | CHECKED BY
SENIOR LANDSCAPE ARCHITECT | MICHAEL BABICH
STATE OF CALIFORNIA - DEPARTMENT OF TRANSPORTATION
Caltrans® LANDSCAPE ARCHITECTURE

LAST REVISION 03-29-10 | DATE PLOTTED => 08-SEP-2010 | TIME PLOTTED => 09:31

Dist	COUNTY	ROUTE	POST MILES TOTAL PROJECT	SHEET No.	TOTAL SHEETS
08	SBd	15	160.9/161.5	42	53

REGISTERED ELECTRICAL ENGINEER 2-02-02 DATE

5-10-10
PLANS APPROVAL DATE

REGISTERED PROFESSIONAL ENGINEER FERDINAND DE LA CRUZ No. E 17215 Exp. 6-30-10 ELECTRICAL STATE OF CALIFORNIA

THE STATE OF CALIFORNIA OR ITS OFFICERS OR AGENTS SHALL NOT BE RESPONSIBLE FOR THE ACCURACY OR COMPLETENESS OF SCANNED COPIES OF THIS PLAN SHEET.

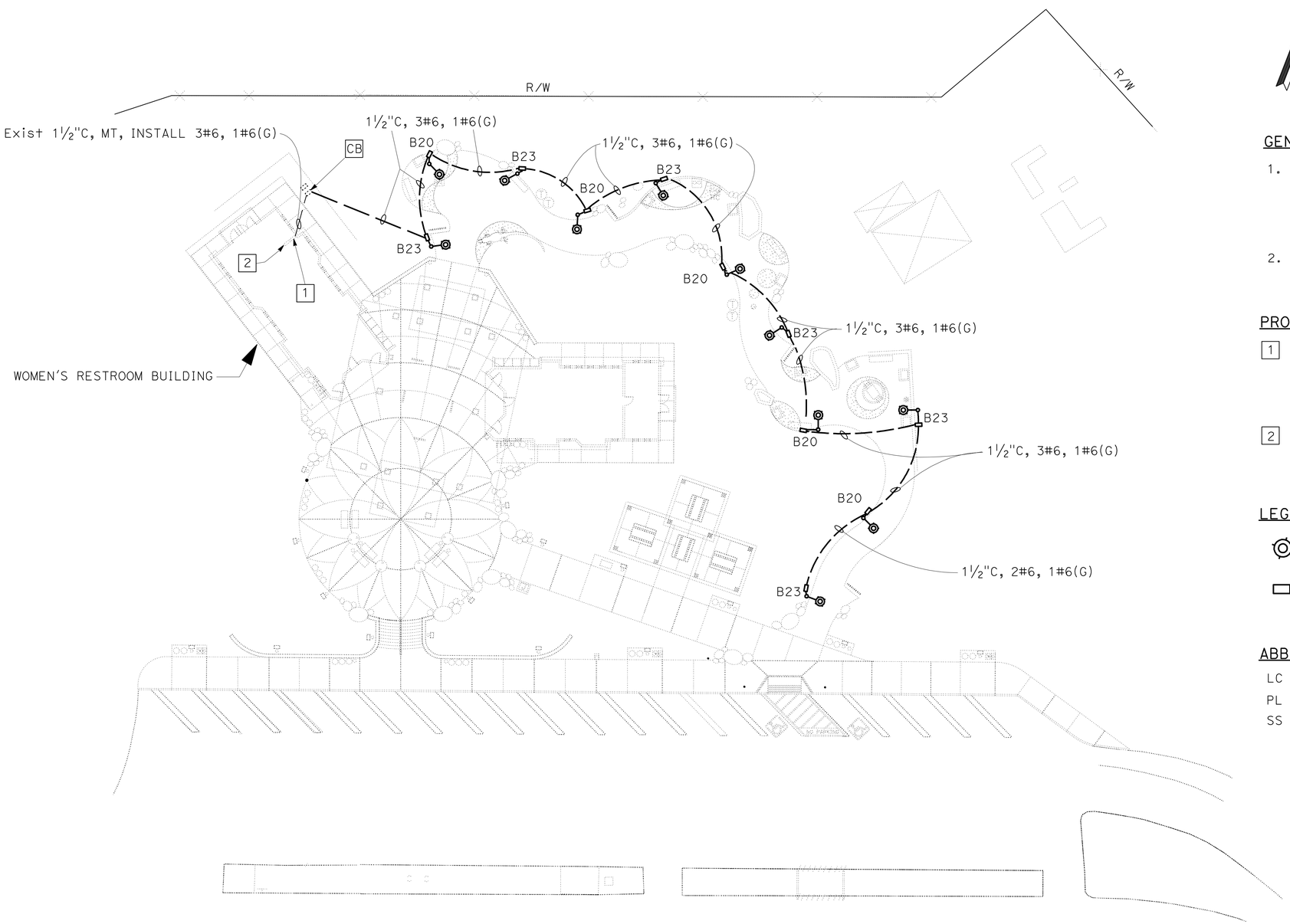

GENERAL NOTES

1. ELECTROLIERS SHALL BE ADJACENT TO PAVED SIDEWALK AREA. LUMINAIRES AND POLE ARMS SHALL BE LOCATED PERPENDICULAR TO THE SIDEWALK EDGE FACING THE SIDEWALK.
2. FOR COMPLETE RIGHT OF WAY AND ACCURATE ACCESS DATA, SEE RIGHT OF WAY RECORD MAPS AT DISTRICT OFFICE.

PROJECT NOTES (THIS SHEET ONLY):

1 EXISTING ELECTRICAL SERVICE PANEL "SB PANEL A". INSTALL THE FOLLOWING CIRCUIT BREAKER IN SLOTS 37 & 39: 20 A, 240 V, 2 P (LIGHTING), SEE SHEET E-2 FOR DETAILS.

2 EXISTING ENCLOSURE "INTERIOR LIGHTING CONTROL STATION 1 (ILCS4)". INSTALL LIGHTING CONTACTOR FOR NEW CIRCUITS. (CUTLER-HAMMER #CN35GN4)

LEGEND

ELECTROLIER WITH 100 W METAL HALIDE LUMINAIRE, SEE E-2 FOR DETAILS.

PULL BOX, No. 3½

ABBREVIATIONS:

LC	LIGHTING CONTROLLER
PL	PILOT LIGHT
SS	SELECTOR SWITCH

TRAIL LIGHTING

SCALE: 1" = 20'

THIS PLAN IS ACCURATE FOR ELECTRICAL WORK ONLY.

E-1

STATE OF CALIFORNIA - DEPARTMENT OF TRANSPORTATION
Caltrans ELECTRICAL DESIGN B

FUNCTIONAL SUPERVISOR: FERDINAND DE LA CRUZ
CALCULATED-DESIGNED BY: LUIS PENALOZA
CHECKED BY: FERDINAND DE LA CRUZ
REVISED BY
DATE REVISED

LAST REVISION 02-02-10
DATE PLOTTED => 08-SEP-2010
TIME PLOTTED => 09:32

Dist	COUNTY	ROUTE	POST MILES TOTAL PROJECT	SHEET No.	TOTAL SHEETS
08	SBd	15	160.9/161.5	43	53

REGISTERED ELECTRICAL ENGINEER 2-02-10 DATE

5-10-10
PLANS APPROVAL DATE

REGISTERED PROFESSIONAL ENGINEER FERDINAND DE LA CRUZ No. E 17215 Exp. 6-30-10 ELECTRICAL STATE OF CALIFORNIA

THE STATE OF CALIFORNIA OR ITS OFFICERS OR AGENTS SHALL NOT BE RESPONSIBLE FOR THE ACCURACY OR COMPLETENESS OF SCANNED COPIES OF THIS PLAN SHEET.

LIGHTING FIXTURE AND POLE DETAILS

TYPE	DESCRIPTION	LAMPS WATT	LAMPS TYPE	LAMPS MOUNT	REMARKS
MH1 / 100	FIXTURE: 120 V, LUMINAIRE WITH INTEGRAL BALLAST: DYNAMIC LIGHTING INC. #FIXTURE-DC310-IS-UPD/100MH-120V/L3Q/CLB	100W	METAL HALIDE	POLE	ONE PIECE CLEAR POLYCARBONATE LENS ENCASES CLEAR PRISMATIC GLASS REFRACTOR. STANDARD BRONZE COLOR.
A / -	POLE: DYNAMIC LIGHTING INC. #POLE-DP04/PLT-12/4-COV/CLB	POLE TYPE: ALUMINUM			POLE SHALL BE 11'-7" HEIGHT, 4" Dia ROUND, NON-TAPERED. STANDARD BRONZE COLOR.
	CROOK: DYNAMIC LIGHTING INC. CROOK No. PT41R-4/CLB	ALUMINUM			

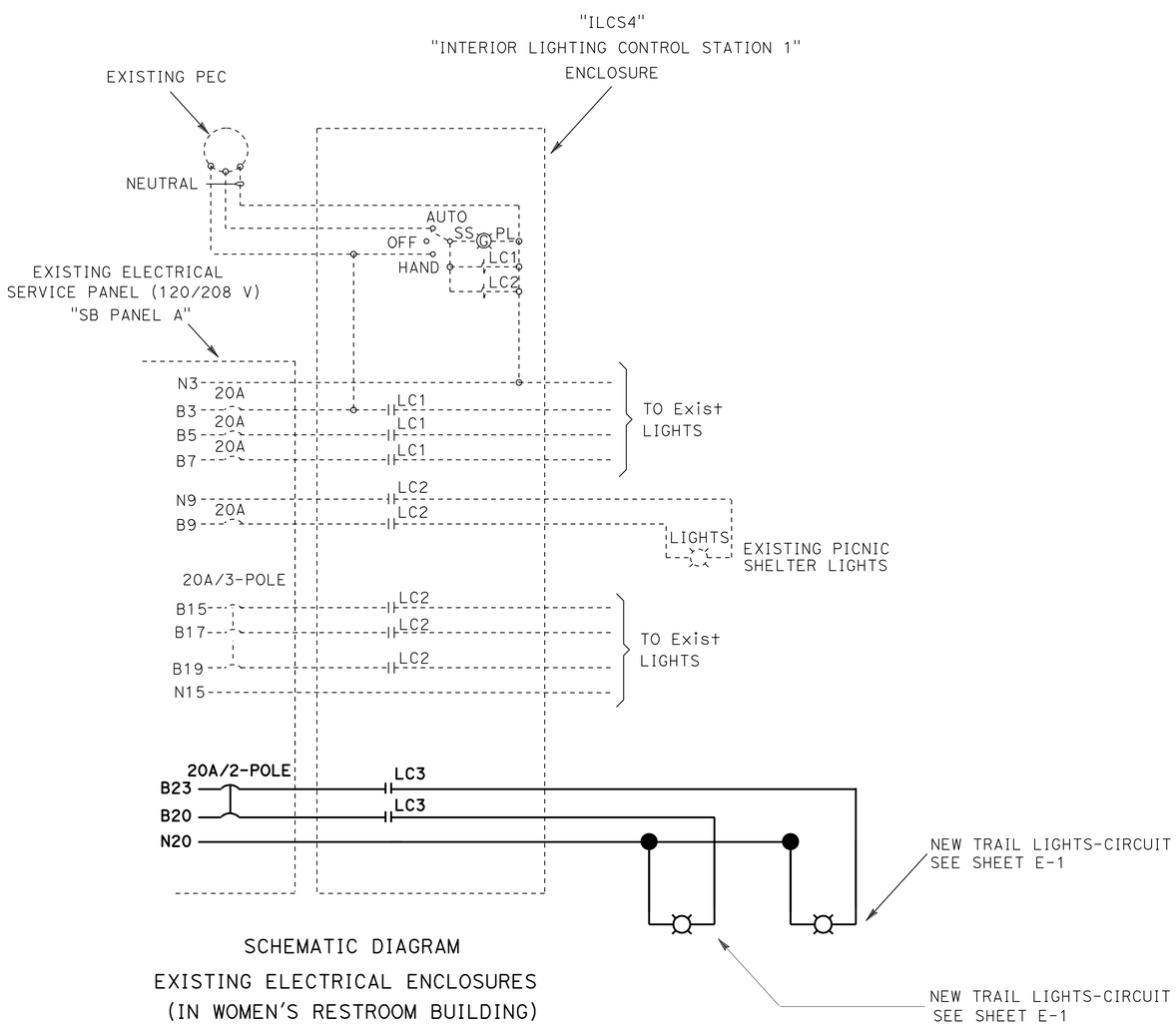

SCHEMATIC DIAGRAM
EXISTING ELECTRICAL ENCLOSURES
(IN WOMEN'S RESTROOM BUILDING)

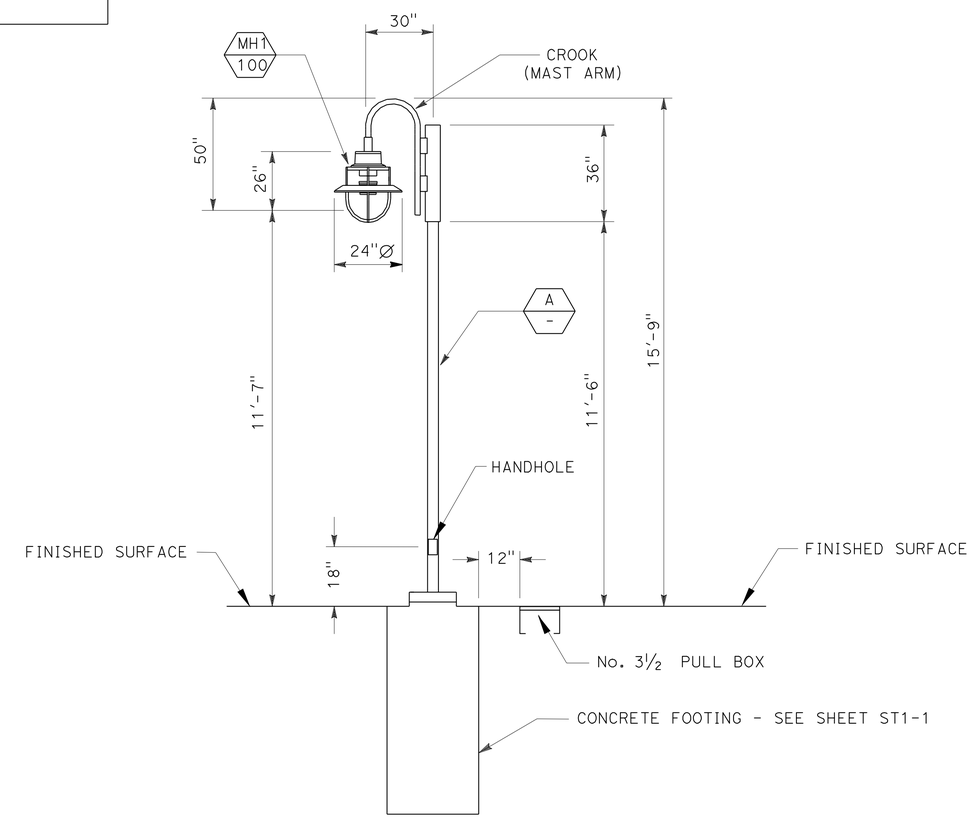

LIGHT STANDARD DETAIL

TRAIL LIGHTING (ELECTRICAL DETAILS)

NO SCALE

E-2

THIS PLAN IS ACCURATE FOR ELECTRICAL WORK ONLY.

STATE OF CALIFORNIA - DEPARTMENT OF TRANSPORTATION
Caltrans® ELECTRICAL DESIGN B

FUNCTIONAL SUPERVISOR: FERDINAND DE LA CRUZ
CALCULATED-DESIGNED BY: LUIS PENALOZA
CHECKED BY: FERDINAND DE LA CRUZ
REVISED BY
DATE REVISED

LAST REVISION 02-02-10
DATE PLOTTED => 08-SEP-2010
TIME PLOTTED => 09:32

DIST	COUNTY	ROUTE	POST MILES TOTAL PROJECT	SHEET NO.	TOTAL SHEETS
08	SBd	15	160.9/161.5	44	53

Randell D. Hiatt
REGISTERED CIVIL ENGINEER

June 6, 2008
PLANS APPROVAL DATE

REGISTERED PROFESSIONAL ENGINEER
Randell D. Hiatt
No. C50200
Exp. 6-30-09
CIVIL
STATE OF CALIFORNIA

The State of California or its officers or agents shall not be responsible for the accuracy or completeness of electronic copies of this plan sheet.

To accompany plans dated 5-10-10

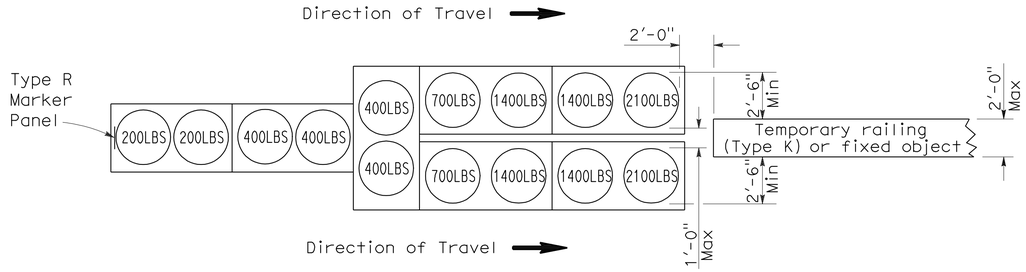

ARRAY 'TU14'

Approach speed 45 mph or more

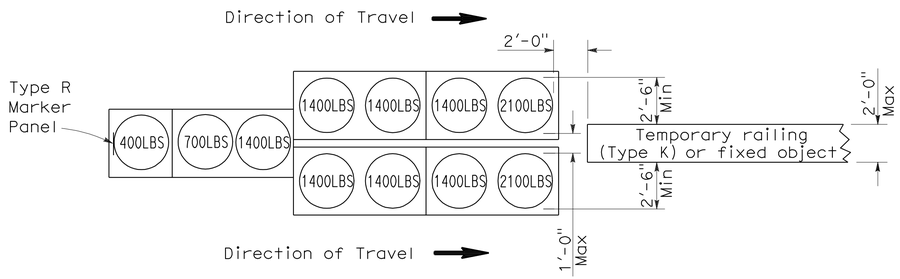

ARRAY 'TU11'

Approach speed less than 45 mph

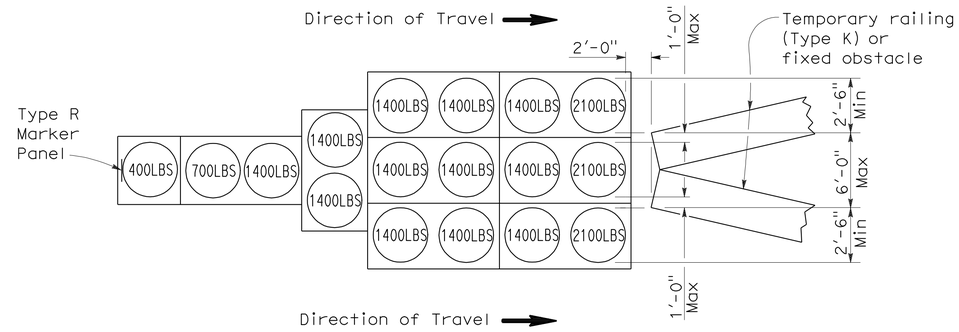

ARRAY 'TU17'

Approach speed less than 45 mph

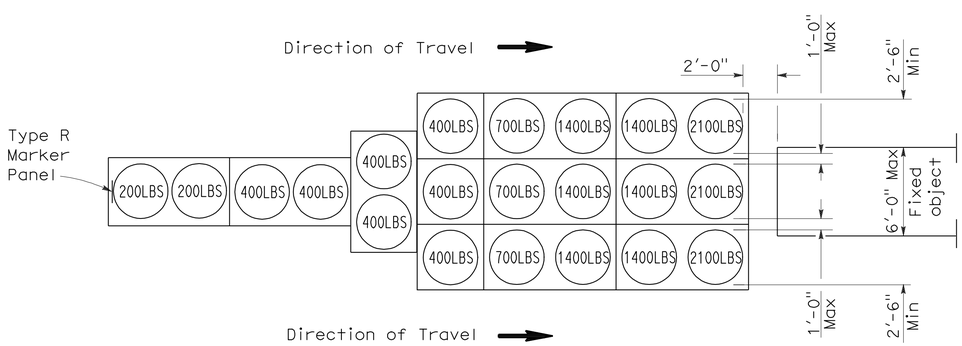

ARRAY 'TU21'

Approach speed 45 mph or more

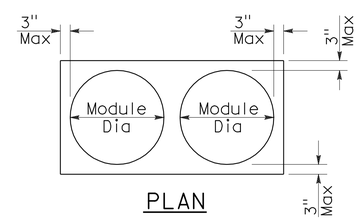

PLAN

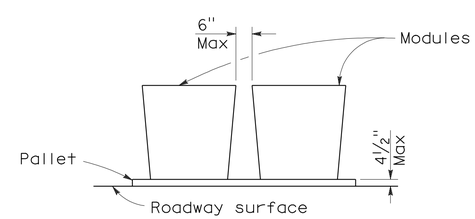

ELEVATION

CRASH CUSHION PALLET DETAIL

See Note 7

NOTES:

1. (XXX) Indicates sand filled module location and weight of sand in pounds for each module. Module spacing is based on the greater diameter of the module.
2. All sand weights are nominal.
3. Temporary crash cushion arrays shall not encroach on the traveled way.
4. Place the top of Type R marker panel 1" below the module lid.
5. Refer to Standard Plan A73B for marker details.
6. Approach speeds indicated conform to NCHRP 350 Report criteria.
7. Use of pallets is optional.

STATE OF CALIFORNIA
DEPARTMENT OF TRANSPORTATION

TEMPORARY CRASH CUSHION, SAND FILLED (UNIDIRECTIONAL)

NO SCALE

RSP T1A DATED JUNE 6, 2008 SUPERSEDES STANDARD PLAN T1A
DATED MAY 1, 2006 - PAGE 211 OF THE STANDARD PLANS BOOK DATED MAY 2006.

REVISED STANDARD PLAN RSP T1A

2006 REVISED STANDARD PLAN RSP T1A

DIST	COUNTY	ROUTE	POST MILES TOTAL PROJECT	SHEET NO.	TOTAL SHEETS
08	SBd	15	160.9/161.5	45	53

Randell D. Hiatt
REGISTERED CIVIL ENGINEER

June 6, 2008
PLANS APPROVAL DATE

REGISTERED PROFESSIONAL ENGINEER
Randell D. Hiatt
No. C50200
Exp. 6-30-09
CIVIL
STATE OF CALIFORNIA

The State of California or its officers or agents shall not be responsible for the accuracy or completeness of electronic copies of this plan sheet.

To accompany plans dated 5-10-10

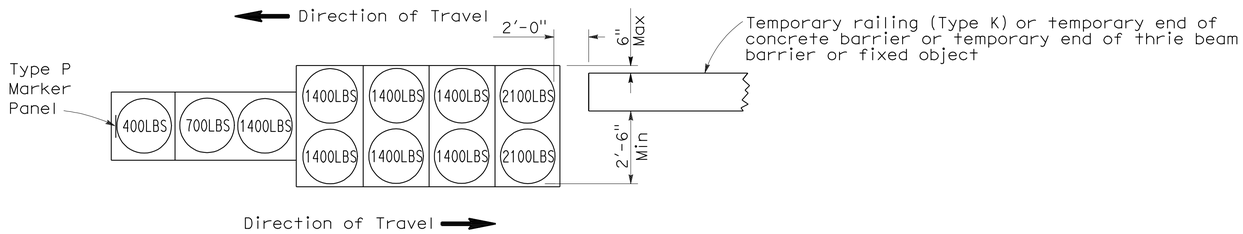

ARRAY 'TB11'

Approach speed less than 45 mph

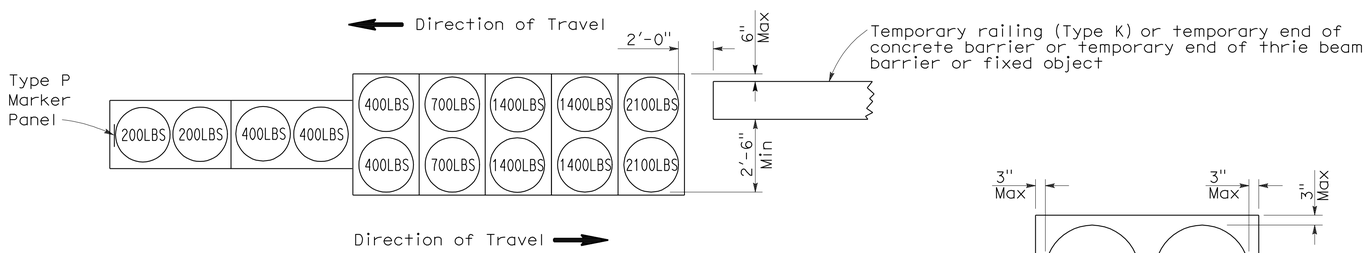

ARRAY 'TB14'

Approach speed 45 mph or more

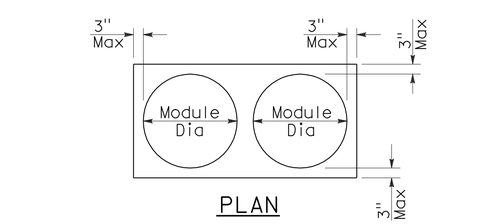

PLAN

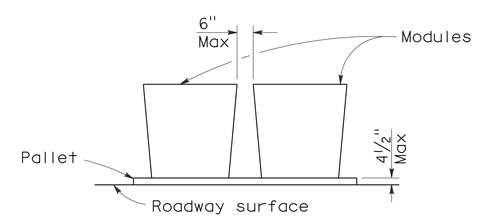

ELEVATION

CRASH CUSHION PALLET DETAIL

See Note 7

NOTES:

1. (XXX) Indicates sand filled module location and weight of sand in pounds for each module. Module spacing is based on the greater diameter of the module.
2. All sand weights are nominal.
3. Temporary crash cushion arrays shall not encroach on the traveled way.
4. Place the Type P marker panel so that the bottom of the panel rests upon the pallet.
5. Refer to Standard Plan A73B for marker details.
6. Approach speeds indicated conform to NCHRP 350 Report criteria.
7. Use of pallets is optional.

STATE OF CALIFORNIA
DEPARTMENT OF TRANSPORTATION

TEMPORARY CRASH CUSHION, SAND FILLED (BIDIRECTIONAL)

NO SCALE

RSP T1B DATED JUNE 6, 2008 SUPERSEDES STANDARD PLAN T1B
DATED MAY 1, 2006 - PAGE 212 OF THE STANDARD PLANS BOOK DATED MAY 2006.

REVISED STANDARD PLAN RSP T1B

2006 REVISED STANDARD PLAN RSP T1B

DIST	COUNTY	ROUTE	POST MILES TOTAL PROJECT	SHEET NO.	TOTAL SHEETS
08	SBd	15	160.9/161.5	46	53

Randell D. Hiatt
REGISTERED CIVIL ENGINEER

June 6, 2008
PLANS APPROVAL DATE

REGISTERED PROFESSIONAL ENGINEER
Randell D. Hiatt
No. C50200
Exp. 6-30-09
CIVIL
STATE OF CALIFORNIA

The State of California or its officers or agents shall not be responsible for the accuracy or completeness of electronic copies of this plan sheet.

To accompany plans dated 5-10-10

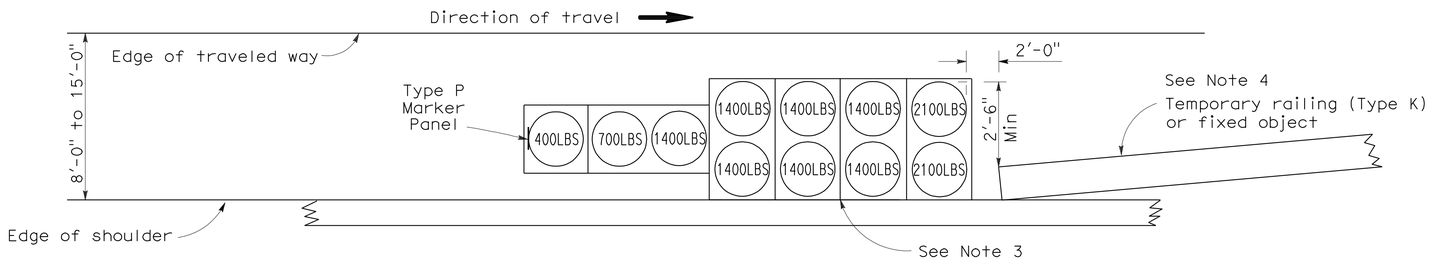

ARRAY 'TS11'

Approach speed less than 45 mph
See Note 9

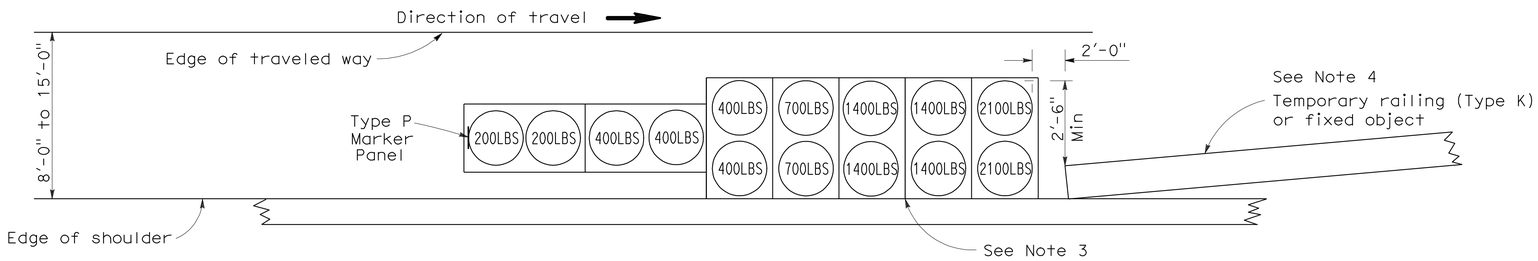

ARRAY 'TS14'

Approach speed 45 mph or more
See Note 9

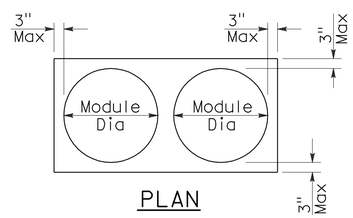

PLAN

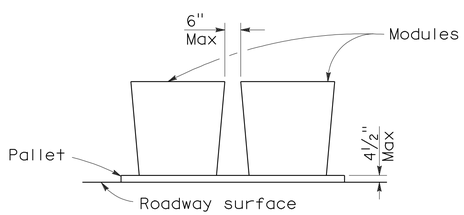

ELEVATION

CRASH CUSHION PALLET DETAIL

See Note 11

NOTES:

1. (XXX) Indicates sand filled module location and weight of sand in pounds for each module. Module spacing is based on the greater diameter of the module.
2. All sand weights are nominal.
3. The temporary crash cushion arrays shown on this plan shall be used only in locations where there will be traffic on one side of the temporary crash cushion array.
4. If the fixed object or approach end of the temporary railing is less than 15'-0" from the edge of traveled way, a temporary crash cushion is required in a construction or work zone.
5. Temporary crash cushion arrays shall not encroach on the traveled way.
6. Arrays for median shoulders shall conform to details shown on this plan for outside shoulders.
7. Place the Type P marker panel so that the bottom of the panel rests upon the pallet and faces traffic.
8. Refer to Standard Plan A73B for marker details.
9. For shoulder widths less than 8'-0", appropriate approved crash cushion protection, other than sand filled modules, shall be provided at fixed objects and at approach ends of temporary railing. The specific type of crash cushion shall be as shown on the project plans or as specified in the Special Provisions, or if not shown on the project plans or specified in the Special Provisions, shall be as approved by the Engineer.
10. Approach speeds indicated conform to NCHRP 350 Report criteria.
11. Use of pallets is optional.

STATE OF CALIFORNIA
DEPARTMENT OF TRANSPORTATION

TEMPORARY CRASH CUSHION, SAND FILLED (SHOULDER INSTALLATIONS)

NO SCALE

RSP T2 DATED JUNE 6, 2008 SUPERSEDES STANDARD PLAN T2
DATED MAY 1, 2006 - PAGE 213 OF THE STANDARD PLANS BOOK DATED MAY 2006.

REVISED STANDARD PLAN RSP T2

2006 REVISED STANDARD PLAN RSP T2

DIST	COUNTY	ROUTE	POST MILES TOTAL PROJECT	SHEET NO.	TOTAL SHEETS
08	SBd	15	160.9/161.5	47	53

REGISTERED CIVIL ENGINEER

November 17, 2006
PLANS APPROVAL DATE

REGISTERED PROFESSIONAL ENGINEER — Greg W. Edwards — No. C36386 — Exp. 6-30-08 — CIVIL — STATE OF CALIFORNIA

The State of California or its officers or agents shall not be responsible for the accuracy or completeness of electronic copies of this plan sheet.

To accompany plans dated 5-10-10

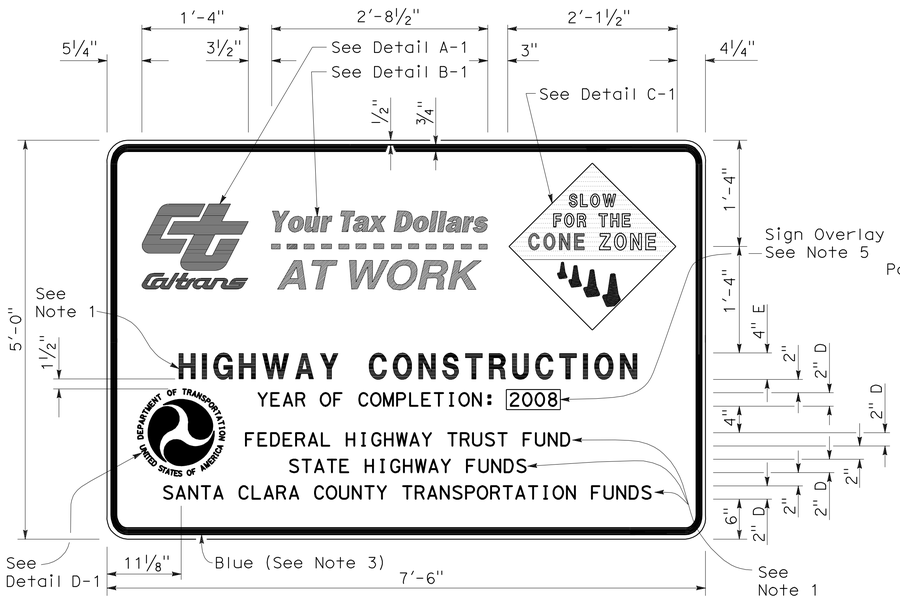

TYPE 1

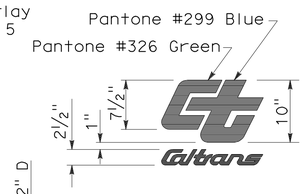

DETAIL A-1

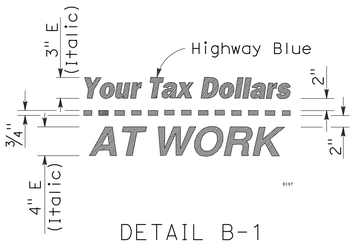

DETAIL B-1
(See Note 3)

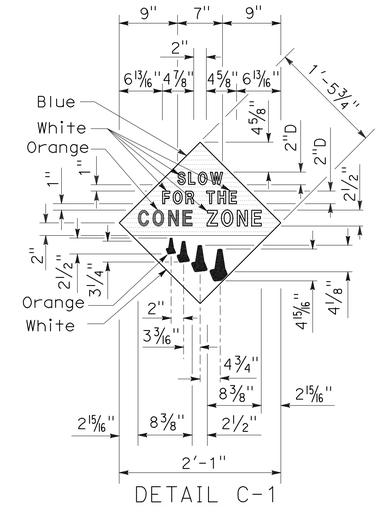

DETAIL C-1
(See Note 4)

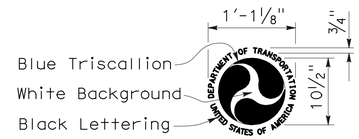

DETAIL D-1
(See Note 6)

NOTES:

1. The sign messages shown for type of project and fund types are examples only. See the Special Provisions for the applicable type of project and fund type messages to be used.
2. Except as otherwise shown, the legend of sign shall be black on a white background (non-reflective).
3. The border of the signs and details "B-1" and "B-2" shall be blue (non-reflective).
4. The diamond in details "C-1" and "C-2" shall be blue for the background of message, " SLOW FOR THE CONE ZONE", and white background for the orange cones. The color and type of font for the "SLOW FOR THE CONE ZONE" message shall be: "SLOW" white D; "FOR THE" white D; "CONE" orange Arial font; "ZONE" white Arial font.
5. Year of completion of project construction shown on the overlay is an example only. See the Special Provisions.
6. Use when the Project involves Federal Highway Trust Fund.

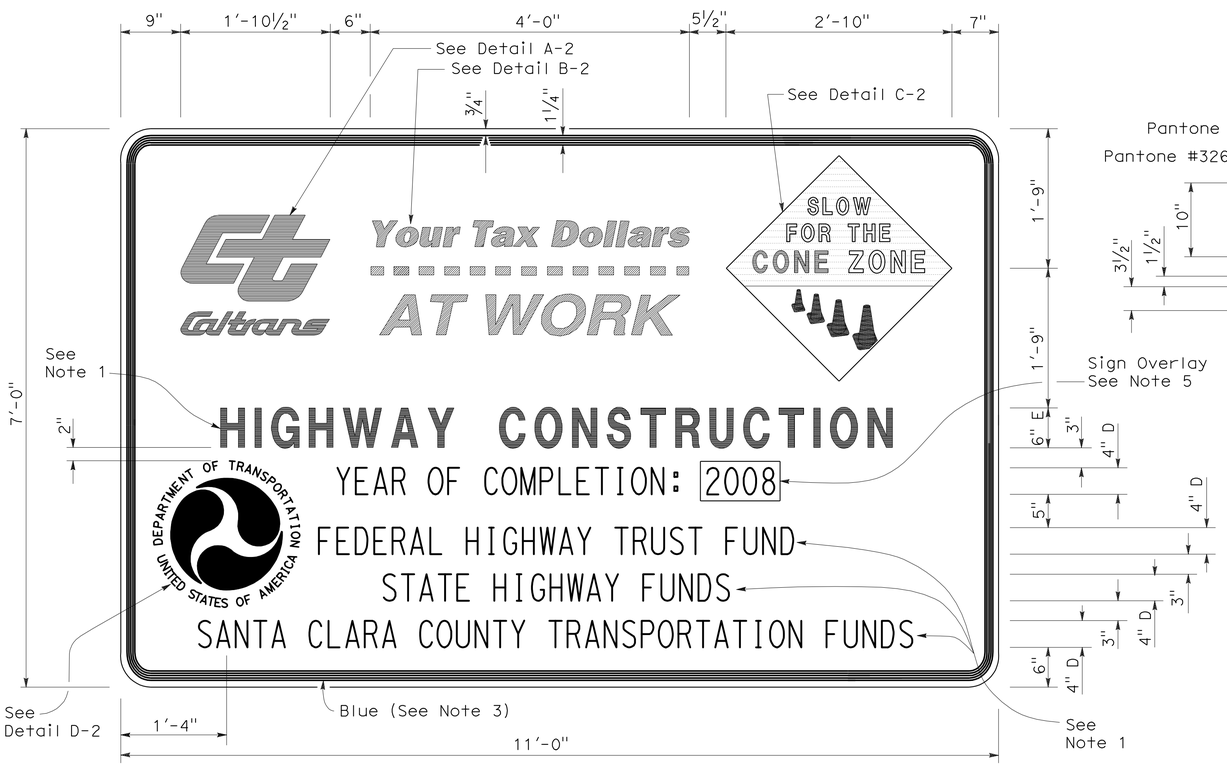

TYPE 2

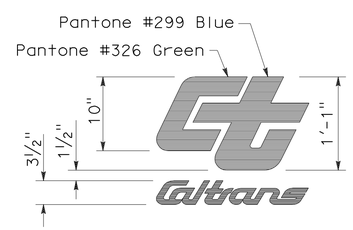

DETAIL A-2

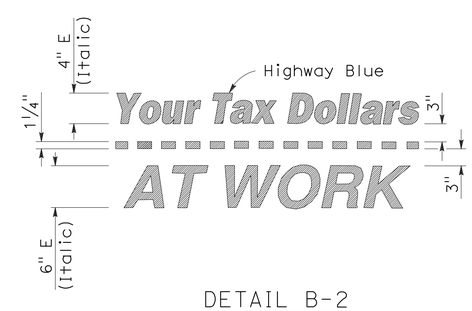

DETAIL B-2
(See Note 3)

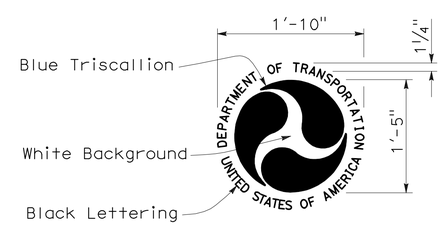

DETAIL D-2
(See Note 6)

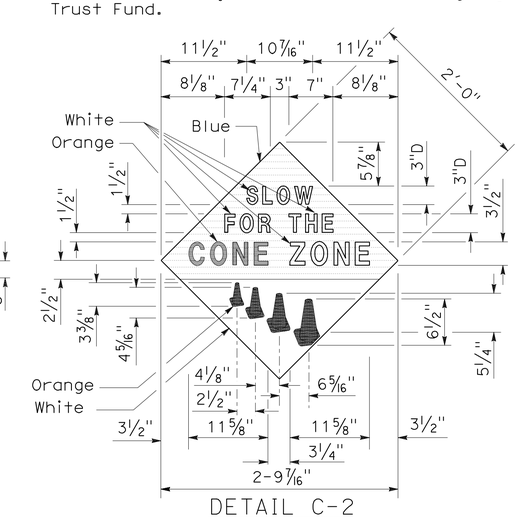

DETAIL C-2
(See Note 4)

STATE OF CALIFORNIA
DEPARTMENT OF TRANSPORTATION

CONSTRUCTION PROJECT FUNDING IDENTIFICATION SIGNS

NO SCALE

RSP T7 DATED NOVEMBER 17, 2006 SUPERSEDES STANDARD PLAN T7
DATED MAY 1, 2006 - PAGE 217 OF THE STANDARD PLANS BOOK DATED MAY 2006.

REVISED STANDARD PLAN RSP T7

2006 REVISED STANDARD PLAN RSP T7

9-7-06

DIST	COUNTY	ROUTE	POST MILES TOTAL PROJECT	SHEET NO.	TOTAL SHEETS
08	SBd	15	160.9/161.5	48	53

REGISTERED ELECTRICAL ENGINEER

October 5, 2007
PLANS APPROVAL DATE

REGISTERED PROFESSIONAL ENGINEER Jeffery G. McRae No. E14512 Exp. 6-30-08 ELECTRICAL STATE OF CALIFORNIA

The State of California or its officers or agents shall not be responsible for the accuracy or completeness of electronic copies of this plan sheet.

To accompany plans dated 5-10-10

ELECTROLIERS

STANDARD TYPES
15, 15D
15 STRUCTURE
21, 21D STRUCTURE
30
31
32
35
36-20A

High mast light pole

Double Arm lighting standard

Existing electrolier

Electrolier foundation (Future installation)

NOTES:

1. Luminaires shall be 310 W HPS when installed on Type 21, 21D, 30, 31, 32, 35 and 36-20A Standards, unless otherwise specified. Luminaires shall be 200 W HPS when installed on other type standards or poles, unless otherwise specified.
2. Luminaires shall be the cutoff type, ANSI Type Ⅲ medium cutoff lighting distribution, unless otherwise specified.
3. Variations noted adjacent to symbol on project plans.

Electrolier (see project notes or project plans)

Luminaire on wood pole

STANDARD NOTES:

- AB Abandon. If applied to conduit, remove conductors.
- BC Install pull box in existing conduit run.
- BP Pedestrian barricade, type as indicated on plan.
- CB Install conduit into existing pull box.
- CC Connect new and existing conduit. Remove existing conductors and install conductors as indicated.
- CF Conduit to remain for future use. Remove conductors. Install pull wire or rope.
- DH Detector handhole.
- FA Foundation to be abandoned.
- IS Install sign on signal mast arm.
- NS No slip base on standard.
- PEC Photoelectric control.
- PEU Photoelectric unit.
- RC Equipment or material to be removed and become the property of the Contractor.
- RE Remove electrolier, fuses and ballast. Tape ends of conductors.
- RL Relocate equipment.
- RR Remove and reuse equipment.
- RS Remove and salvage equipment.
- SC Splice new to existing conductors.
- SD Service disconnect.
- SF Standard to remain for future use. Remove luminaire, pole conductors, fuses and ballast.
- TSP Telephone service point.

ABBREVIATIONS AND EQUIPMENT DESIGNATIONS

PROPOSED	EXISTING	
BBS	bbs	Battery backup system
BC	bc	Bolt circle
C	C	Conduit
CCTV	cctv	Closed circuit television
CKT	ckt	Circuit
CMS	cms	Changeable message sign
DLC	dlc	Loop detector lead-in cable
EMS	ems	Extinguishable message sign
EVC	evc	Emergency vehicle cable
EVD	evd	Emergency vehicle detector
FB	fb	Flashing beacon
FBCA	fbca	Flashing beacon control assembly
FBS	fbs	Flashing beacon with slip base
FO	fo	Fiber optic
G	G	Ground (Equipment Grounding Conductor)
GFCI	GFCI	Ground fault circuit interrupt
HAR	har	Highway advisory radio
HEX	hex	Hexagonal
HPS	hps	High pressure sodium
IISNS	iisns	Internally illuminated street name sign
ISL	isl	Induction sign lighting
LED	led	Light emitting diode
LMA	lma	Luminaire mast arm
LPS	lps	Low pressure sodium
LTG	ltg	Lighting
LUM	lum	Luminaire
MAT	mat	Mast arm mounting vehicle signal faces, top attachment
MAS	mas	Mast arm mounting vehicle signal faces, side attachment
MAS-4A	mas-4A	Mast arm mounting vehicle signal faces, side attachment - 4 signal section
MAS-4B	mas-4B	
MAS-4C	mas-4C	
MAS-5A	mas-5A	Mast arm mounting vehicle signal faces, side attachment - 5 signal section
MAS-5B	mas-5B	
MC	mc	Mercury contactor
M/M	m/m	Multiple to multiple transformer
MT	mt	Conduit with pull wire or rope only
MTG	mtg	Mounting
	mv	Mercury vapor lighting fixture
N	N	Neutral (Grounded Conductor)
NC	NC	Normally closed
NO	NO	Normally open
PB	pb	Pull box
PEC	pec	Photoelectric control (Type Ⅰ, Ⅱ, Ⅲ, Ⅳ or Ⅴ as shown)
PED	ped	Pedestrian
PEU	peu	Photoelectric unit
PPB	ppb	Pedestrian push button
RL		Relocated equipment
RM	rm	Ramp metering
SB	sb	Slip base
SIC	sic	Signal interconnect cable
SIG	sig	Signal
SMA	sma	Signal mast arm
SNS	sns	Street name sign
SP	sp	Service point
TDC	tdc	Telephone demarcation cabinet
TMS	tms	Traffic monitoring station
TOS	tos	Traffic Operations System
VEH	veh	Vehicle
XFMR	xfmr	Transformer
COMM	comm	Communication
RWIS	rwis	Roadway weather information system

SOFFIT AND WALL MOUNTED LUMINAIRES

Pendant, 70 W HPS unless otherwise specified.

Flush, 70 W HPS unless otherwise specified.

Wall surface, 70 W HPS unless otherwise specified.

Existing soffit or wall luminaire to remain unmodified.

Existing soffit or wall luminaire to be modified as specified.

NOTE:

Arrow indicates "street side" of luminaire.

STATE OF CALIFORNIA
DEPARTMENT OF TRANSPORTATION

ELECTRICAL SYSTEMS (SYMBOLS AND ABBREVIATIONS)

NO SCALE

RSP ES-1A DATED OCTOBER 5, 2007 SUPERSEDES STANDARD PLAN ES-1A
DATED MAY 1, 2006 - PAGE 400 OF THE STANDARD PLANS BOOK DATED MAY 2006.

REVISED STANDARD PLAN RSP ES-1A

2006 REVISED STANDARD PLAN RSP ES-1A

DIST	COUNTY	ROUTE	POST MILES TOTAL PROJECT	SHEET NO.	TOTAL SHEETS
08	SBd	15	160.9/161.5	49	53

REGISTERED ELECTRICAL ENGINEER

October 5, 2007
PLANS APPROVAL DATE

REGISTERED PROFESSIONAL ENGINEER Jeffery G. McRae No. E14512 Exp. 6-30-08 ELECTRICAL STATE OF CALIFORNIA

The State of California or its officers or agents shall not be responsible for the accuracy or completeness of electronic copies of this plan sheet.

To accompany plans dated 5-10-10

CONDUIT

PROPOSED	EXISTING	
		Lighting Conduit, unless otherwise indicated or noted
		Traffic signal conduit
C	c	Communication conduit
T	t	Telephone conduit
F	f	Fire alarm conduit
FO	fo	Fiber optic conduit
		Conduit termination (RSP ES-9A C)
R	r	Conduit riser in/on structure or service pole

SERVICE EQUIPMENT

PROPOSED	EXISTING	
OH	oh	Overhead lines
U	U	Wood pole "U" indicates utility owned
		Pole guy with anchor
		Utility transformer - ground mounted
III		Service equipment enclosure type
		Service equipment enclosure door indicates front of enclosure
T	t	Telephone demarcation cabinet

POLE-MOUNTED SERVICE DESIGNATION

Type of installation

TYPE H SERVICE - 28'-10" ← Pole height above grade

ILLUMINATED OVERHEAD SIGN

PROPOSED	EXISTING	
		Overhead sign - Single post
		Overhead sign - Two post
		Overhead sign - Mounted on structure
		Overhead sign with electrolier

SIGNAL EQUIPMENT

PROPOSED	EXISTING	
		Pedestrian signal face
		Pedestrian push button post
		Pedestrian barricade
		Vehicle signal face (with backplate, 3-Section: red, yellow and green)
		Vehicle signal face with angle visors
PV	PV	Modifications of basic symbols: "L" indicates all non-arrow sections louvered "LG" indicates louvered green section only "PV" indicates 12" programmed visibility sections "8" indicates all 8" sections (only when specified)
		Type 15TS and Vehicle signal face
		Vehicle signal face with red, yellow and green left arrow sections
		Vehicle signal face with red and yellow sections and up green arrow
		Vehicle signal face (5 Section) with red, yellow and green sections and yellow and green right arrows
		Type 1 Standard and attached vehicle signal faces
		Standard with signal mast arm only and attached vehicle signal faces and internally illuminated street name sign
		Type 33 Standard, Left-turn vehicle signal face and sign
		Standard with luminaire and signal mast arms and attached vehicle signal faces
		Cantilever flashing beacon Type 9 Frame, with a sign unless otherwise specified or indicated
		Type 15-FBS Standard with two vehicle signal face sections with lens, backplate and visor with a sign
R	Y	Flashing beacon. One vehicle signal face section with lens, backplate and visor. "R" indicates red indication, "Y" indicates yellow indication
		Controller assembly. Door indicates front of cabinet

SIGNAL EQUIPMENT Cont

PROPOSED	EXISTING	
		Guard post
		Type 1 Standard with "Meter On" sign
		Emergency Vehicle detector

NOTES:

1. All signal sections shall be 12" unless shown otherwise.
2. Signal heads shall be provided with backplates unless shown otherwise.
3. Signal indication shall be LED.

STATE OF CALIFORNIA
DEPARTMENT OF TRANSPORTATION

ELECTRICAL SYSTEMS (SYMBOLS AND ABBREVIATIONS)

NO SCALE

RSP ES-1B DATED OCTOBER 5, 2007 SUPERCEDES STANDARD PLAN ES-1B DATED MAY 1, 2006 - PAGE 401 OF THE STANDARD PLANS BOOK DATED MAY 2006.

REVISED STANDARD PLAN RSP ES-1B

2006 REVISED STANDARD PLAN RSP ES-1B

DIST	COUNTY	ROUTE	POST MILES TOTAL PROJECT	SHEET NO.	TOTAL SHEETS
08	SBd	15	160.9/161.5	50	53

REGISTERED ELECTRICAL ENGINEER

October 5, 2007
PLANS APPROVAL DATE

REGISTERED PROFESSIONAL ENGINEER Jeffery G. McRae No. E14512 Exp. 6-30-08 ELECTRICAL STATE OF CALIFORNIA

The State of California or its officers or agents shall not be responsible for the accuracy or completeness of electronic copies of this plan sheet.

To accompany plans dated 5-10-10

EQUIPMENT IDENTIFICATION

ILLUMINATED SIGN IDENTIFICATION NUMBER:

Sign No. 12345

10 ISL SCI 1.0

- Sign number - Place on post or structure
- Transformer rating (kVA)
- Lighting control type
- Number and type of fixtures

Do NOT place on standard or structure

ELECTROLIER OR EQUIPMENT IDENTIFICATION NUMBER:

12345 - 15'-0"

- Mast arm length, if shown. Do not place on standard or structure.
- Equipment number - Place on standard or structure. Existing equipment numbers are shown in parenthesis

CONDUIT AND CONDUCTOR IDENTIFICATION:

1½"C, 2#10, 15#14, 2 DLC

- Number and size of conductors and cables
- Size of conduit in inches

Ø1, Ø2, Ø2P, etc.	Traffic phase identification for signal faces, detectors and phase diagrams
1 2 3	Project note numbers
A B C	Equipment description, installation or item numbers
1 2 3	Conduit run numbers

SIGNAL AND LIGHTING STANDARD (TYPICAL DESIGNATION):

19A - 3 - 100

- Wind velocity = 100 mph
- Case 3 arm loading
- Standard type
- Standard Plan sheet number
- Detail number or letter

MISCELLANEOUS EQUIPMENT

PROPOSED	EXISTING	
CMS	cms	Changeable message sign
		Closed circuit television camera
		Highway advisory radio pole and antenna
EMS	ems	Extinguishable message sign
M V	m v	Detection device M = Microwave sensor V = Video image sensor

WIRING DIAGRAM LEGEND

P	Pole
CB	Circuit breaker
A	Ampere
V	Volt
M	Metered
UM	Unmetered
NB	Neutral bus
GB	Ground bus
G	Equipment grounding conductor
N	Grounded conductor (Neutral)

- External conductor
- Conductor or bus
- Tie point
- Contactor coil
- Contactor, Contact NO
- Terminal blocks
- Contactor, Contact NC
- Enclosure bond
- Grounding electrode
- Circuit breaker
- Receptacle

PULL BOXES

PROPOSED EXISTING

Pull box-No. 5 unless otherwise indicated or noted.

3 9A(21)

Pull box-Additional designations or descriptions

3 = No. 3½ pull box
5 = No. 5 pull box
6 = No. 6 pull box
7 = No. 7 (Ceiling pull box)
8 = No. 8 (Pendant soffit pull box)
9 = No. 9 pull box
9A = No. 9A pull box

(C) = Communications pull box
(E) = Pull box with extension
(S) = Sprinkler control pull box
(21) = Anchor bolts and conduit for future installation of Type 21 Standard
(T) = Traffic pull box

VEHICLE DETECTORS

5 J 9 U

- Vehicle detector designation
- U = Upper
  L = Lower
- Slot number in input file
- Input file (I or J)
- Phase

PROPOSED	EXISTING	
		Type A detector loop. Outline of sawcut shown.
		Type B detector loop. Outline of sawcut shown.
		Type C detector loop. Outline of sawcut shown.
		Type D detector loop. Outline of sawcut shown.
		Type E detector loop. Outline of sawcut shown.
		Type Q detector loop. Outline of sawcut shown.
		Magnetic detector
DH	dh	Detector handhole
		Microwave or video detection zone

STATE OF CALIFORNIA
DEPARTMENT OF TRANSPORTATION

ELECTRICAL SYSTEMS (SYMBOLS AND ABBREVIATIONS)

NO SCALE

RSP ES-1C DATED OCTOBER 5, 2007 SUPERCEDES STANDARD PLAN ES-1C DATED MAY 1, 2006 - PAGE 402 OF THE STANDARD PLANS BOOK DATED MAY 2006.

REVISED STANDARD PLAN RSP ES-1C

2006 REVISED STANDARD PLAN RSP ES-1C

DIST.	COUNTY	ROUTE	POST MILES TOTAL PROJECT	SHEET NO.	TOTAL SHEETS
08	SBd	15	160.9/161.5	51	53

REGISTERED CIVIL ENGINEER — DATE 11-05-09

REGISTERED PROFESSIONAL ENGINEER Gang Hong No. 60406 Exp. 6-30-10 CIVIL STATE OF CALIFORNIA

5-10-10
PLANS APPROVAL DATE

The State of California or its officers or agents shall not be responsible for the accuracy or completeness of electronic copies of this plan sheet.

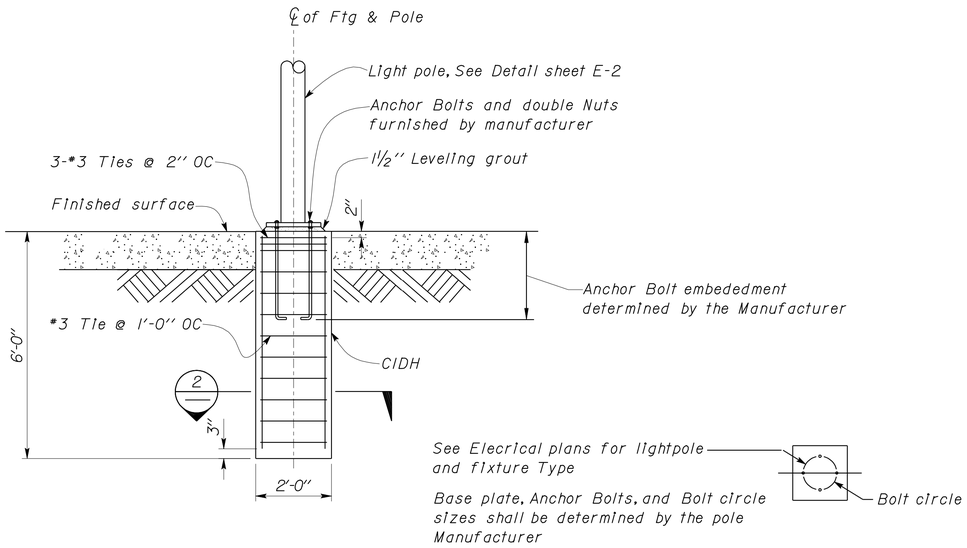

1 LIGHTPOLE FOOTING
Scale ½" = 1'-0"

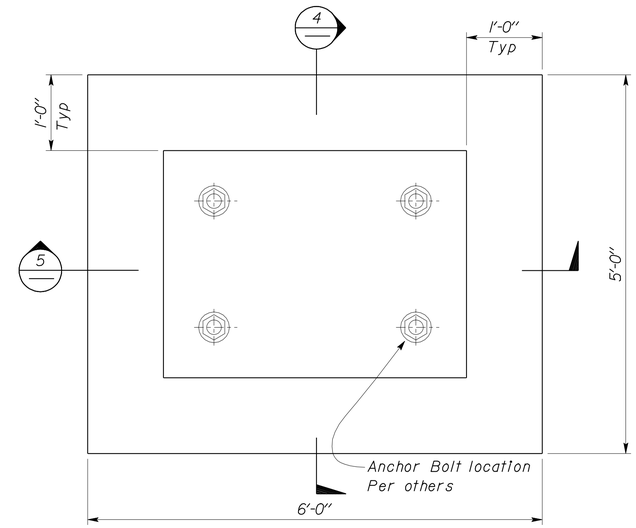

3 REPLICA BIGHORN SHEEP FOOTING DETAIL
Scale 1" = 1'-0"

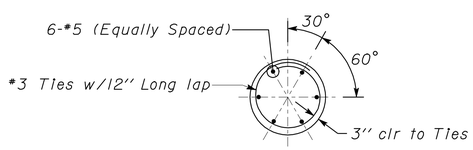

2 SECTION
Scale ½" = 1'-0"

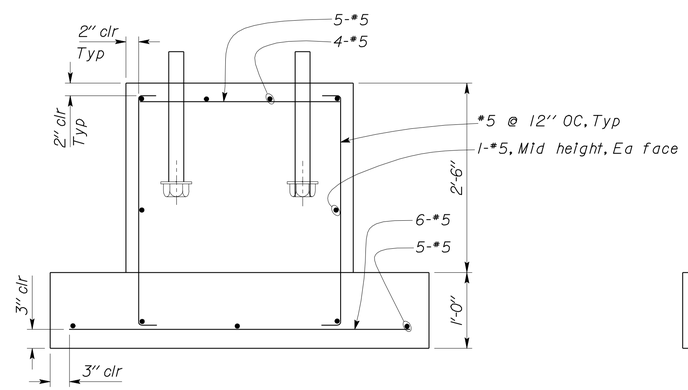

4 REPLICA BIGHORN SHEEP FOOTING DETAIL
Scale 1" = 1'-0"

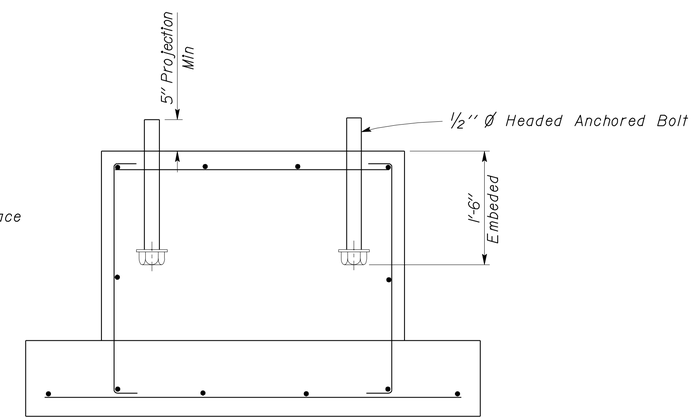

5 REPLICA BIGHORN SHEEP FOOTING DETAIL
Scale 1" = 1'-0"

NOTE
The Contractor shall verify all controlling field dimensions before ordering or fabricating any material.

	BY	CHECKED
DESIGN	Gang Hong	Brian Sutliff
DETAILS	Andrew A. Lovato	Gang Hong
QUANTITIES		

STATE OF CALIFORNIA DEPARTMENT OF TRANSPORTATION

DIVISION OF ENGINEERING SERVICES ARCHITECTURAL AND STRUCTURAL DESIGN

BRIDGE NO.
POST MILE 160.9/165.5

VALLEY WELLS SAFETY ROADSIDE REST AREA
FOUNDATION DETAILS

SHEET ST1-1

DOES SD Imperial Rev. 9/02

ORIGINAL SCALE IN INCHES FOR REDUCED PLANS 0 1 2 3

CU 08341
EA 0A6410

DISREGARD PRINTS BEARING EARLIER REVISION DATES → 10-14-09

REVISION DATES (PRELIMINARY STAGE ONLY) SHEET OF

K:\Draft\PSESubmit_Folder\PSESubmit\08-0a6411\80A641st1_01.dgn

08-SEP-2010 09:32

DIST.	COUNTY	ROUTE	POST MILES TOTAL PROJECT	SHEET NO.	TOTAL SHEETS
08	SBd	15	160.9/161.5	52	53

REGISTERED CIVIL ENGINEER — DATE 11-05-09

REGISTERED PROFESSIONAL ENGINEER — Gang Hong — No. 60406 — Exp. 6-30-10 — CIVIL — STATE OF CALIFORNIA

5-10-10
PLANS APPROVAL DATE

The State of California or its officers or agents shall not be responsible for the accuracy or completeness of electronic copies of this plan sheet.

FOOTING SCHEDULE			
Description	Dimension	Reinforcement	
		Long	Transverse
Theme Sign	7'-0"x4'-0"	4-#5 Top & Btm	7-#5 Top & Btm
Large Sign	5'-0"x3'-0"	3-#5 Top & Btm	5-#5 Top & Btm
Binocular	3'-0"x3'-0"	3-#5 Top & Btm	3-#5 Top & Btm

1 FOOTING SCHEDULE & LAYOUT
No Scale

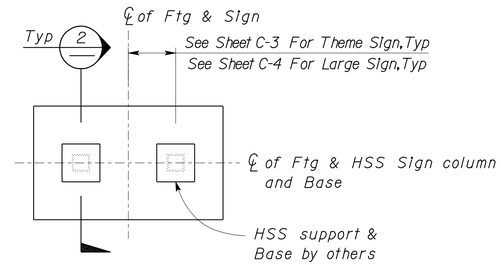

THEME OR LARGE SIGN PLAN FOOTING
No Scale

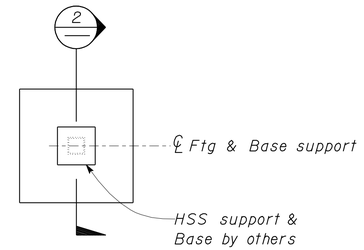

BINOCULAR PLAN FOOTING
No Scale

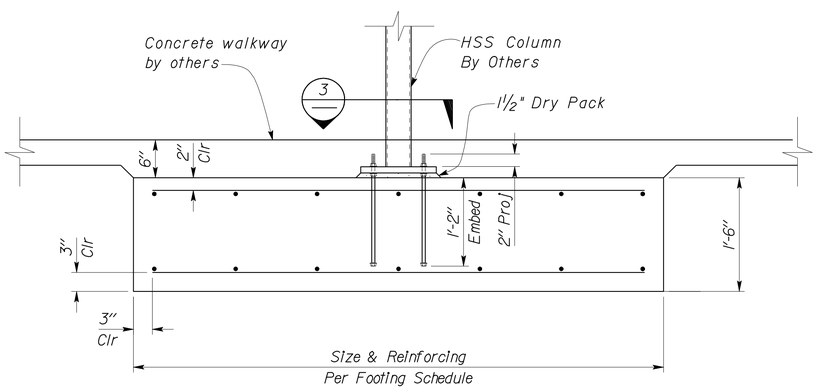

2 FOOTING DETAIL
No Scale

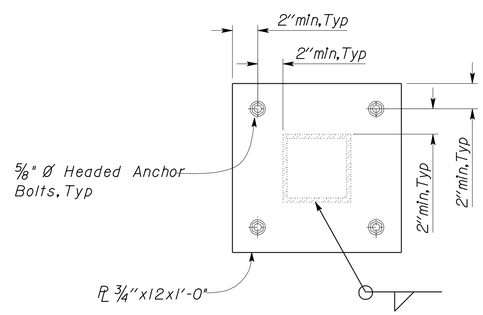

3 TYPICAL BASE PLATE DETAIL
No Scale

NOTE
The Contractor shall verify all controlling field dimensions before ordering or fabricating any material.

	BY	CHECKED
DESIGN	Gang Hong	Brian Sutliff
DETAILS	Andrew A. Lovato	Gang Hong
QUANTITIES		

STATE OF CALIFORNIA
DEPARTMENT OF TRANSPORTATION

DIVISION OF ENGINEERING SERVICES
ARCHITECTURAL AND STRUCTURAL DESIGN

BRIDGE NO.
POST MILE 160.9/165.5

VALLEY WELLS SAFETY ROADSIDE REST AREA
SIGN FOUNDATION DETAILS

SHEET ST1-2

DOES SD Imperial Rev. 9/02

ORIGINAL SCALE IN INCHES FOR REDUCED PLANS 0 1 2 3

CU 08341
EA 0A6410

DISREGARD PRINTS BEARING EARLIER REVISION DATES → 10-14-09 10-21-09

REVISION DATES (PRELIMINARY STAGE ONLY) SHEET OF

K:\Draft\PSESubmit_Folder\PSESubmit\08-0a6411\80A641st1_02.dgn

08-SEP-2010 09:32

DIST.	COUNTY	ROUTE	POST MILES TOTAL PROJECT	SHEET NO.	TOTAL SHEETS
08	SBd	15	160.9/161.5	53	53

Brian T. Sutliff 10-20-09
REGISTERED CIVIL ENGINEER DATE

REGISTERED PROFESSIONAL ENGINEER
Brian T. Sutliff
No. 3862
Exp. 3-31-10
STRUCTURAL
STATE OF CALIFORNIA

5-10-10
PLANS APPROVAL DATE

The State of California or its officers or agents shall not be responsible for the accuracy or completeness of electronic copies of this plan sheet.

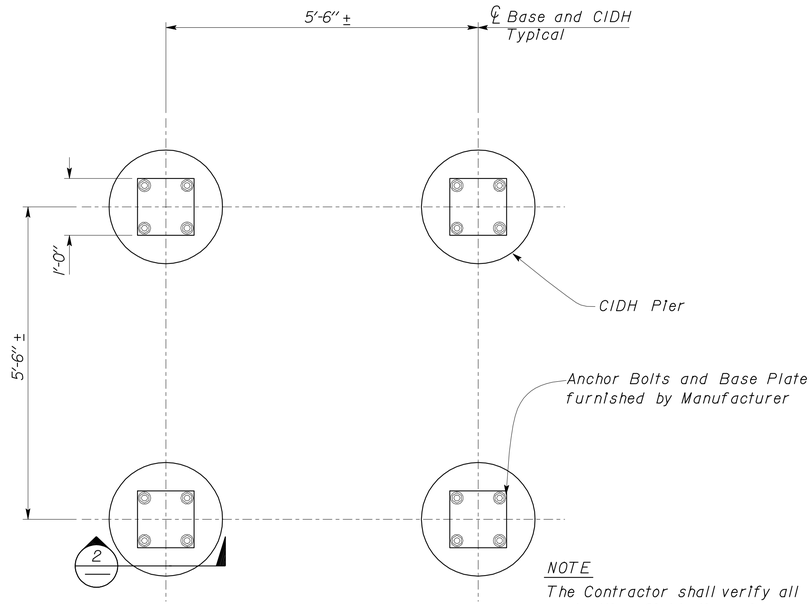

NOTE
The Contractor shall verify all controlling field dimensions before ordering or fabricating any material.

1 CIDH PIER PLAN
Scale 3/4" = 1' - 0"

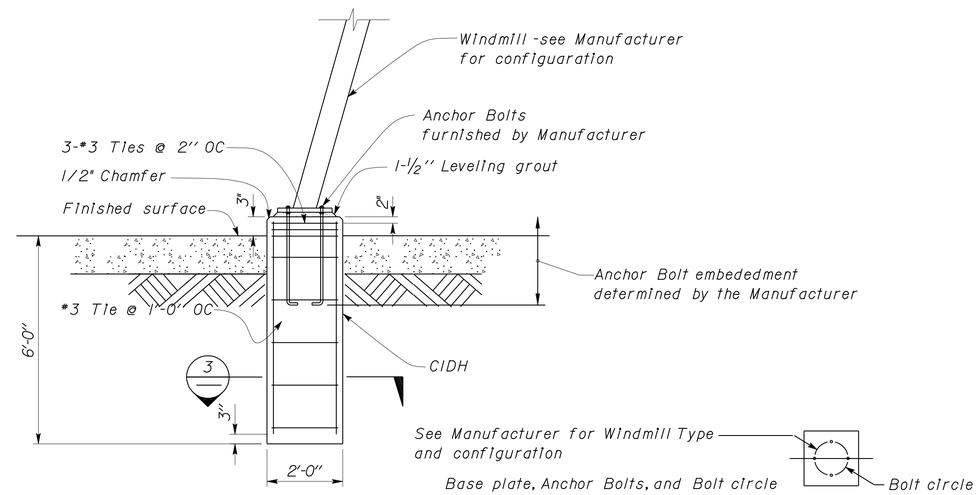

2 LIGHTPOLE FOOTING
Scale 1/2" = 1' - 0"

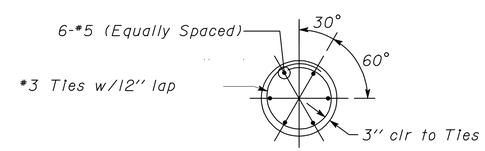

CIDH FOOTING

3 SECTION
Scale 1/2" = 1' - 0"

NOTE
The Contractor shall verify all controlling field dimensions before ordering or fabricating any material.

DESIGN	BY Gang Hong	CHECKED Brian Sutliff	
DETAILS	BY Andrew A. Lovato	CHECKED Gang Hong	
QUANTITIES	BY	CHECKED	

STATE OF CALIFORNIA
DEPARTMENT OF TRANSPORTATION

DIVISION OF ENGINEERING SERVICES
ARCHITECTURAL AND STRUCTURAL DESIGN

BRIDGE NO.
POST MILE 160.9/165.5

VALLEY WELLS SAFETY ROADSIDE REST AREA

WINDMILL FOUNDATION

SHEET ST1- 3

DOES SD Imperial Rev. 9/02

ORIGINAL SCALE IN INCHES FOR REDUCED PLANS 0 1 2 3

CU 08341
EA 0A6410

DISREGARD PRINTS BEARING EARLIER REVISION DATES → - -09

REVISION DATES (PRELIMINARY STAGE ONLY) SHEET OF

08-SEP-2010 09:32

K:\Draft\PSESubmit_Folder\PSESubmit\08-0a6411\80A641st1_03.dgn