FOR CONTRACT NO.: **05-0T9704**

INFORMATIONAL HANDOUT

MATERIALS INFORMATION

GEOTECHNICAL DESIGN REPORT
Dated September 18, 2012

MANUFACTURER DRAWINGS

Terminal Systems

SKT-MGS
by Road Systems, Inc.

ET-Plus 31
by Trinity Highway Products, LLC.

ROUTE: 05-SB-246-33.2/33.5

State of California Business, Transportation and Housing Agency
Department of Transportation

M e m o r a n d u m ***Flex your power!***

Be energy efficient!

To: STEVE WYATT
Senior Design Engineer
Central Region Project Development
Office of Design II, Branch D

Date: September 18, 2012

File: 05-0T9701 (0500020226)
05-SB-246-33.2/33.5
Left Turn Channelization

Attn: Brian Fuller
Project Engineer

From: **DEPARTMENT OF TRANSPORTATION**
DIVISION OF ENGINEERING SERVICES
GEOTECHNICAL SERVICES

Subject: Geotechnical Design Report for Meadowvale Road Left Turn Channelization

A Geotechnical Design Report (GDR) is provided for the above referenced project per your request dated May 11, 2012. The project proposes to widen Route 246 in Santa Barbara County from 0.1-mile east of Edison Street to 0.1-mile east of Meadowvale Road to provide left turn channelization for eastbound vehicles on Route 246 turning north onto Meadowvale Road. The project is programmed in the 2010 State Highway Operation and Protection Program (SHOPP) for Right of Way capital and Construction capital in 2013/2014. A Vicinity Map showing the project location is presented as Attachment 1.

The recommendations presented herein are based on reviews of published data, site reconnaissance, subsurface investigations, and laboratory testing. The purpose of this report is to document subsurface geotechnical conditions, provide analyses of anticipated site conditions as they pertain to the project described herein, and to recommend design and construction criteria for the roadway portions of the project. This report also establishes a geotechnical baseline to be used in assessing the existence and scope of differing site conditions.

This report is intended for use by the project design engineer, construction personnel, bidders, and contractors.

Existing Facilities and Proposed Improvements

Route 246 within the project limits is a two-lane conventional highway traversing the rolling terrain of the Santa Ynez Valley. The project area is located on the easterly outskirts of the town of Santa Ynez, less than a mile west of the junction of Route 246 with Route 154. The existing roadway cross section consists of two 12-foot lanes and 4-foot shoulders.

It is proposed to widen the existing roadway to the north to accommodate a 12-foot left-turn lane for eastbound traffic and an 8 foot shoulder on the westbound side of the highway. It is proposed to

construct a geogrid reinforced 1.5:1 slope on the northerly side of the existing roadway embankment to avoid relocating a sewer line and to keep the widening within the existing highway right of way.

Pertinent Reports and Investigations

The following publications were used to assist in the assessment of site conditions:

1. *Caltrans ARS Online.*
2. *Geologic Map of the Santa Ynez and Tajiguas Quadrangles, Santa Barbara County, California,* Thomas W. Dibblee, Jr., 1988.
3. *Geotechnical Services Design Manual, Version 1.0,* Division of Engineering Services, August 2009.
4. *Materials Report for Surfacing and Grading of State Highway Route 246 in Santa Barbara County Between Santa Ynez (PM 33.2) and Route 154 (PM 34.6),* J. M. Sturgeon, 1969.
5. *Soil Survey of Northern Santa Barbara Area, California,* United States Department of Agriculture, Soil Conservation Service.

Field reviews of the project area have been performed by personnel from this office to determine potential geologic and geotechnical issues that may impact the construction and performance of the facility over its design life. In addition, a subsurface investigation was conducted on June 19, 2012 to assess foundation conditions for the embankment widening, and to determine strength parameters of excavated soil that will be used to construct the embankments.

Physical Setting

Climate

The climate in the project area can generally be characterized as Mediterranean, with warm, dry summers, and cooler, relatively damp winters. The average temperatures range between the low 50's degrees Fahrenheit to the mid 80's and low 90's in the summer, and from the high 30's and low 40's to the high 60's during the winter. The warmest month of the year is August with an average maximum temperature of about 93 degrees Fahrenheit. The coldest month of the year is December with an average minimum temperature of about 39 degrees Fahrenheit. The average annual precipitation in Santa Ynez is approximately 22 inches. Almost all of the precipitation occurs between October and April, with the majority falling during the winter months.

Topography and Drainage

The project site lies in the Santa Ynez Valley on gently rolling terrain. Adjacent land use is primarily agricultural through most of the project area. Roadway elevations range between approximately 580 feet and 615 feet above mean sea level.

The project site drains to Zanja de Cota Creek, which flows south and drains to the Santa Ynez River about 2 miles to the south of the project area.

Regional Geology and Seismicity

The project area lies at the boundary of two geomorphic provinces, the Transverse Ranges and the Coast Ranges. The Transverse Ranges are an east-west trending series of steep mountain ranges and valleys. The Transverse Ranges Geomorphic Province extends offshore to include San Miguel, Santa Rosa, and Santa Cruz islands. It extends to the San Bernardino Mountains to the east, and its northern limit is the Santa Ynez River.

The Coast Ranges are a northwest-trending series of mountain ranges and valleys. The mountains generally range between 2,000 and 4,000 feet above sea level. The ranges and valleys parallel the San Andreas Fault. The Coast Ranges Geomorphic Province is bounded to the south, along the Santa Ynez River, by the Transverse Ranges Geomorphic Province; to the east by the Klamath Mountains and Great Valley Geomorphic Provinces; and extends to the northern border of California. The predominant rock types in the coastal ranges are Cenozoic marine sedimentary and Mesozoic Franciscan Complex rocks.

The Santa Ynez Valley is a wedge-shaped topographic depression bounded by the Santa Ynez Mountains to the south, the San Rafael Mountains to the east and north, and the Purisma Hills to the west. The valley is a down-dropped structural block between two major faults, the Santa Ynez River Fault to the south, and the Little Pine Fault to the north and east. A thick section of generally unconsolidated alluvial deposits has accumulated in the valley. These Pleistocene to Recent deposits overlie older Miocene marine rocks.

The project is located within a seismically active region of California. There are several earthquake faults in close proximity to the project area. Table 1 lists the active and potentially active faults in the project vicinity as described in Caltran's *2007 Fault Database*. Corresponding Moment Magnitudes, fault types, and distances to the project area are also given. A fault map is included in the attachments to this report.

Table 1: Active and Potentially Active Faults

Fault	***Moment Magnitude of Maximum Credible Earthquake*** [1]	***Type of Fault*** [2]	***Distance to Fault from Project Area (kilometers)***
Baseline Fault	6.9	R	2.3
Santa Ynez River Fault Zone	7.1	LLSS	3.0
Santa Ynez Fault Zone (Pacifico Section)	7.1	LLSS	6.1
Los Alamos Fault	6.9	R	6.2
Little Pine Fault	7.1	R	11.9
Santa Ynez Fault Zone (Santa Ynez Section)	7.2	R	14.8
Lions Head Fault	6.6	R	17.6
North Channel Slope	7.4	R	19.7
San Jose Fault (Santa Barbara)	6.3	R	23.0
More Ranch Fault	7.2	R	25.9
Southern San Luis Range Fault Zone	7.2	R	30.9
Canada Honda Fault	6.5	RLSS	34.1
Mission Ridge-Arroyo Parida Fault	7.2	R	35.6
Mesa-Rincon Fault	6.8	R	35.7
Casmalia Fault	6.5	R	35.8

Soil Survey Mapping

According to *Soil Survey of Northern Santa Barbara Area, California*, (United States Department of Agriculture, Natural Resource Conservation Service) the following soil types are present in the project area. Included in the soil descriptions are recommended values for the erosion factors K_f and T for the surface horizon, to be used in the Revised Universal Soil Loss Equation Version 2 (RUSLE2):

- EdC2: Elder sandy loam, 2 to 9 percent slopes; eroded; form on treads of alluvial fans; parent material is alluvium derived from acid sandstone and shale; K_f=0.24, T=5.
- PtC: Positas fine sandy loam, 2 to 9 percent slopes; well drained; form on treads of terraces, parent material is alluvium; K_f=0.37, T=4.
- SnC: Santa Ynez gravelly fine sandy loam, 2 to 9 percent slopes; moderately well drained; form on treads of terraces; parent material is alluvium; K_f=0.32, T=4.

[1] According to Caltrans *2007 Fault Database*
[2] LLSS=left-lateral strike-slip fault; RLSS=right-lateral strike-slip fault; R=reverse fault; N=normal fault

- TdF: Terrace escarpments, loamy; form on escarpments; parent material is loamy alluvium; K_f and T have not been rated.

The distribution of the different soil types through the project area is as follows:

Table 2: Soil Type Distribution

Station Limits "A2 Line"	Soil Classification			
	EdC2	PtC	SnC	TdF
100+00 to 103+70		X		
103+70 to 104+50				X
104+50 to 106+50	X			
106+50 to 113+60			X	
113+60 to 128+75		X		

Exploration

Field investigations performed at the project site included visual evaluations of existing slopes, geotechnical borings, and monitoring of groundwater elevations.

Drilling and Sampling

Two mud rotary borings, RC-12-001 and RC-12-002, were conducted in the project area on June 19, 2012 to provide information for this report. The maximum depth of investigation was 38 feet.

Table 3: 2012 Subsurface Investigation Summary

Boring No.	Completion Date	Drill Rig Type	Hammer Type	Hammer Efficiency (%)	Location		Ground Surface Elevation (ft)	Boring Depth (ft)
					Station ("A1" Line)	Offset		
RC-12-001	6/19/2012	CME-750	Automatic	81	107+90	45' Lt.	581.1	38.0
RC-12-002	6/19/2012	CME-750	Automatic	81	116+07	65' Lt.	612.3	22.3

The mud rotary borings were advanced using a self-cased wireline drilling apparatus that provided continuous soil samples. Soils were visually classified in accordance with the Caltrans Soil and Rock Logging, Classification, and Presentation Manual (June 2010). Standard penetration tests (SPT), ASTM test method 1586, were performed at selected depth intervals to estimate in-place density of the native soil. Empirical correlations of soil strength parameters with SPT blow counts were used to estimate strength parameters of in-situ cohesionless soils. Pocket penetrometer measurements of unconfined compressive strength were used to estimate the undrained shear strength of clay samples.

Site Geology and Subsurface Conditions

Lithology

According to *Geologic Map of the Santa Ynez and Tajiguas Quadrangles, Santa Barbara County, California* by Thomas W. Dibblee, Jr, the project area is underlain by Holocene aged valley and floodplain deposits of gravel, sand, and silt, geologic unit Q_a; and Pleistocene-aged remnants of stream terraces, geologic unit Q_{oa}, consisting of gravel, sand, and silt.

Subsurface Conditions

The soils encountered during subsurface investigation are consistent with the formations indicated on the geologic map. Boring RC-12-001 encountered approximately 7.5 feet of loose to medium dense clayey sand with gravel and poorly graded sand with gravel, overlying 13 feet of dense poorly graded sand and poorly graded sand with gravel, overlying very dense sand and sand with gravel. Boring RC-12-002 encountered approximately 3 feet of loose silt overlying very dense, well graded sand with varying proportions of gravel.

Groundwater

Boring RC-12-001 was instrumented as a short term open-standpipe observation well to monitor groundwater elevations. 1½" slotted PVC pipe was installed in the open borehole, and the water level was checked one week after drilling was completed. The well was then abandoned by removing the pipe and backfilling the hole with bentonite chips. The hole was dry on June 26, 2012, indicating that groundwater is below elevation 543.1 feet.

Project Site Seismicity

Ground Motion

Peak ground acceleration (PGA) in the project area due to an earthquake on one of the nearby faults was estimated using the *2009 Caltrans Seismic Design Procedure.* The procedure was developed to calculate the minimum seismic design requirements for bridges on State highways. The method calculates design response spectra over a range of periods. The design response spectrum is based on the envelope of a deterministic and a probabilistic spectrum. The deterministic spectrum is calculated as the arithmetic average of median response spectra computed using the Chiou & Youngs and Campbell & Bozorgnia ground motion prediction equations (CY-CB GMPE). These equations are applied to all faults in or near California considered to be active in the last 700,000 years (late Quaternary age) and capable of producing a moment magnitude earthquake of 6.0 or greater.

The probabilistic spectrum is obtained from the 2008 USGS Seismic Hazard Map for the 5% in 50 years probability of exceedance (or 975 year return period). The spectral values are adjusted with a

soil amplification factor based on an average of the Boore-Atkinson (2008), Campbell Bozorgnia (2008), and Chiou-Youngs (2008) ground motion prediction models. For sites underlain by soils having an average shear wave velocity for the upper 30 meters of soil (V_{S30}) of less than 300 meters per second, the 2009 USGS Probabilistic Seismic Hazard Analysis Interactive Deaggregation Tool is used to develop the probabilistic spectrum.

The controlling fault in the project area is the Baseline Fault, a reverse fault with a maximum magnitude of 6.9. The peak ground acceleration in the project area is estimated to be 0.73 g (gravity). The deterministic spectrum governed the design response spectrum.

Ground Rupture

According to the *2007 Caltrans Deterministic PGA Map*, no known active or potentially active faults project towards or cross the highway alignment within the project limits. Therefore, there is no potential for surface fault rupture to occur and no mitigation efforts are necessary.

Liquefaction

Soil liquefaction occurs when loose, water-saturated soils lose shear strength in response to the sudden shaking from an earthquake and begin behaving like a liquid, reducing their ability to support embankments and structures. Loose sands and gravels with 35 percent fines or less that have the potential of being saturated are susceptible to liquefaction. Generally, the younger and looser the sediment, and the shallower the water table, the more susceptible the soil is to liquefaction. Sediments most susceptible to liquefaction include historical and late Holocene-age river channel and flood plain deposits, and poorly compacted fills. Bedrock and dense soils, including well-compacted fills, have a low susceptibility to liquefaction. Liquefaction is most prevalent in areas where groundwater lies within 30 feet of the ground surface; liquefaction rarely occurs in areas with groundwater deeper than 50 feet.

Based on the results of the subsurface investigation liquefaction potential in the project area is estimated to be low. No loose granular soils were encountered at an elevation where they are likely to be saturated with groundwater.

Corrosion

Representative soil samples taken during the subsurface investigation were tested for corrosion potential. The Department considers a site corrosive to foundation elements if one or more of the following conditions exist for the representative soil and/or water samples taken at the site:

- Chloride concentration is greater than or equal to 500 ppm
- Sulfate concentration is greater than or equal to 2000 ppm
- The pH is 5.5 or less

Since resistivity serves as an indicator parameter for the possible presence of soluble salts, tests for sulfate and chloride are usually not performed unless the resistivity of the soil is 1,000 ohm-cm or less.

Table 4: Corrosion Test Summary

Boring	Depth	SIC Number	Minimum Resistivity (Ohm-Cm)	pH	Chloride Content (ppm)	Sulfate Content (ppm)
RC-12-002	0'-22.3'	C5124601	1800	7.13	N/A	N/A
Corrosive if:				**≤ 5.5**	**≥ 500**	**≥ 2000**

Based on corrosion test results, and because the project area is not within 1000 feet of salty or brackish water, the site is considered non-corrosive.

Geotechnical Analysis and Design

Cuts

Relatively low height cuts are proposed. Slope inclinations of 2:1 or flatter are recommended to prevent surficial erosion and encourage vegetation growth. Native soils are expected to be easily rippable.

Unreinforced Embankment Fills

The existing embankment between "A2" Stations 106+75 and approximately 111+50 will be widened on the northerly side to provide roadway width for the proposed left turn lane and shoulder widening. Slope inclinations of 2:1 or flatter are recommended for unreinforced embankment slopes. Soil from on-site roadway excavations will be acceptable for use as embankment material. Refer to Section 19-6, "Embankment Construction" of the Standard Specifications for embankment construction requirements.

Geosynthetic Reinforced Embankments

Construction of a geosynthetic reinforced embankment with a slope inclination of 1.5:1 is recommended from "A2" Station 106+75 to "A2" Station 110+00. The maximum height of the proposed embankment is approximately 14 feet. Between Station 110+00 and 110+50 the slope inclination should flatten from 1.5:1 to 2:1. This 50-foot section of embankment should also be reinforced. Backfill material for the geosynthetic reinforced embankment shall comply with Section 19-6.02B, "Geosynthetic Reinforced Embankment" of the Standard Specifications. Material generated from on-site roadway excavation should be suitable for use as geosynthetic reinforced embankment backfill. Recycled asphalt concrete shall not be used as backfill for the geosynthetic reinforced embankment.

The geosynthetic reinforced embankment was designed in accordance with the procedures documented in the Federal Highway Administration's Geotechnical Engineering Circular No. 11, *Design and Construction of Mechanically Stabilized Earth Walls and Reinforced Soil Slopes*, 2009. The design procedure fundamentally consists of modeling the global stability of the unreinforced slope to determine the horizontal limits of potential failure surfaces having a factor of safety of less than 1.5, and then adding reinforcement to the model to intersect the critical failure surfaces and increase the minimum factor of safety to 1.5. The reinforcement acts to increase the factor of safety by providing resisting tensile force across the critical failure surfaces; the reinforcement generally extends a minimum of 3 feet beyond the horizontal limit of potential failure surfaces having a factor of safety of less than 1.5. The limit equilibrium slope stability computer program SlopeW was used to analyze slope stability of the unreinforced embankment. The computer program ReSSA was used to design the geosynthetic reinforcement. Factors of safety for circular, translational, and three-part wedge failure surfaces were analyzed.

Geosynthetic reinforcing shall have minimum long term design strength (LTDS) of 1000 pounds/foot and shall be placed at two-foot vertical spacing. Primary reinforcing layers shall extend 12 feet from the slope face into the embankment. The first layer of primary reinforcing shall be placed on a smooth and level excavation compacted to 95% relative compaction. Secondary reinforcing layers, centered between the primary reinforcement layers and extending 4 feet from the slope face into the embankment, are recommended to provide local embankment face stability and aid in compaction near the face of the embankment. Aggressive re-vegetation of the slope is recommended to provide local embankment face stability.

Groundwater is not expected to be encountered during construction of the geosynthetic reinforced embankment nor is it expected to rise into the reinforced embankment mass after construction.

Vertical Stress Increase over Sewer Main

The increase in vertical stress over the existing sewer main due to the embankment widening was calculated by the method of superposition using influence factors derived from Dr. Jorj Osterberg's *Influence Values for Vertical Stresses in Semi-infinite Mass Due to Embankment Loading.* At a depth of approximately 10 feet and a horizontal distance from the toe of slope of roughly 9 feet, the calculated vertical stress increase over the sewer pipe is approximately 25 psf.

Settlement analyses were performed for the soil layers beneath the sewer main. The subsurface investigation indicates that the subsurface stratigraphy consists primarily of cohesionless soils. Elastic settlement in cohesionless soils was calculated using Hough's Method, which correlates soil grain size distribution and SPT values with a bearing capacity factor that is used in a settlement equation. The calculated settlement was 0.02-inch, which is negligible when considering possible impacts to the sewer pipe.

Construction Considerations

Care shall be taken not to damage the geosynthetic reinforcement during placement and compaction of the backfill for the reinforced embankment. A cushion of soil should be maintained between the geosynthetic and the tires or tracks of earth moving equipment.

Temporary slopes and/or shoring required for the construction of the reinforced embankment shall be designed by the contractor. The design shall be submitted to the Resident Engineer for his review and approval.

Foundation soils are generally adequate to support the proposed embankment widening throughout the project limits. Localized areas of unconsolidated or saturated foundation materials, however, may require stripping and recompaction, or removal of material deemed unsuitable.

While the vertical stress increase due to the embankment widening should have negligible impacts on the existing sewer main that parallels the roadway, construction activities have the potential to damage the utility. The contractor will be responsible for protecting the facility in place.

Recommendations

Refer to the preceding sections for detailed recommendations. The following list summarizes the recommendations provided in this report:

- Roadway cut and fill slopes are typically to be constructed with slope inclinations of 2:1 or flatter.

- Embankments steeper than 2:1 shall be reinforced with geosynthetics. Primary reinforcement shall have a minimum long-term design strength (LTDS) of 1000 pounds/foot and shall be embedded into the embankment a minimum of 12 feet. Spacing between primary reinforcement layers shall be 2 feet. Secondary reinforcement should be utilized midway between primary reinforcement layers to provide surficial stability and to aid in compaction. Embedment depth of secondary reinforcement should be 4 feet.

- Re-vegetate all exposed slopes and implement erosion control measures to increase resistance to shallow slope instabilities.

Closure

The recommendations contained in this report are based on specific project information that has been provided by Office of Design II, Branch D. If any conceptual changes are made during final project design, the Office of Geotechnical Design – North, Branch D should review those changes to determine if the recommendations contained in this report are still applicable. Any questions regarding the recommendations contained herein should be directed to the attention of Dan Appelbaum, (805) 549-3745, or Mike Finegan, (805) 549-3194, at the Office of Geotechnical Design – North, Branch D.

Supervised by,

REGISTERED PROFESSIONAL ENGINEER
D.L. Appelbaum
No. C 50001
Exp. 6-30-13
CIVIL
STATE OF CALIFORNIA

DANIEL L. APPELBAUM, PE
Transportation Engineer
Geotechnical Design – North
Branch D

MICHAEL S. FINEGAN, PE, Chief
Geotechnical Design - North
Branch D

c: Roy Bibbens / GDN File (E-copy)
Amy Donatello – Project Manager (E-copy)
GeoDOG - Digital Archive of Geotechnical Data (E-copy)
R.E. Pending File
Doug Lambert – District Materials Engineer (E-copy)
Job File / Branch D Records

LIST OF ATTACHMENTS

ATTACHMENT 1 **VICINITY MAP**

ATTACHMENT 2 **GEOLOGIC MAP**

ATTACHMENT 3 **EARTHQUAKE FAULTS**

ATTACHMENT 4 **LOG OF TEST BORINGS**

ATTACHMENT 5 **CONSTRUCTION DETAILS**

INDEX OF PLANS

STATE OF CALIFORNIA
DEPARTMENT OF TRANSPORTATION

PROJECT PLANS FOR CONSTRUCTION ON
STATE HIGHWAY

IN SANTA BARBARA COUNTY
IN SANTA YNEZ
FROM 0.1 MILE EAST OF EDISON STREET
TO 0.1 MILE EAST OF MEADOWVALE LANE

TO BE SUPPLEMENTED BY 2010 STANDARD PLANS

Dist	COUNTY	ROUTE	POST MILES TOTAL PROJECT	SHEET No.	TOTAL SHEETS
05	SB	246	33.2/33.5		

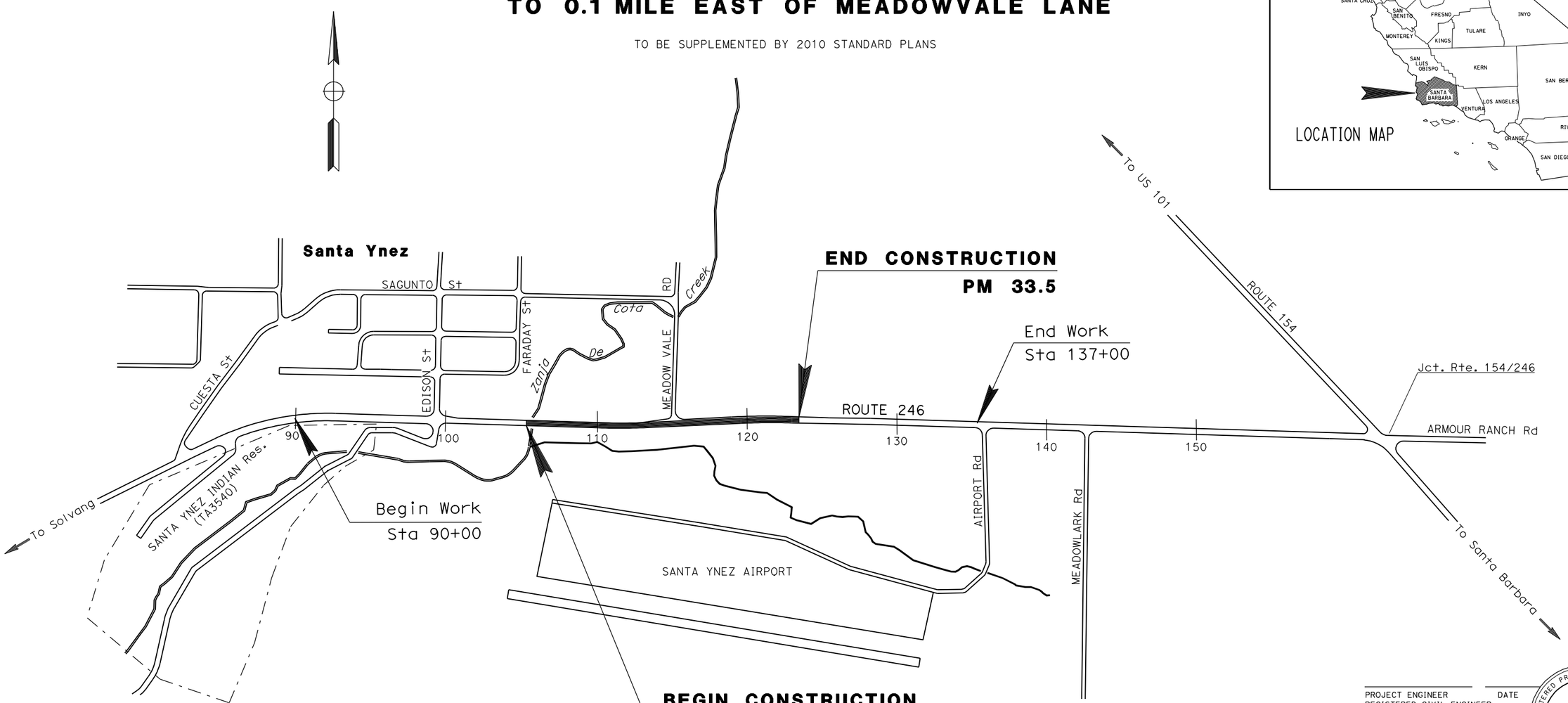

NO SCALE

PROJECT ENGINEER DATE
REGISTERED CIVIL ENGINEER

PLANS APPROVAL DATE

THE STATE OF CALIFORNIA OR ITS OFFICERS OR AGENTS SHALL NOT BE RESPONSIBLE FOR THE ACCURACY OR COMPLETENESS OF SCANNED COPIES OF THIS PLAN SHEET.

REGISTERED PROFESSIONAL ENGINEER
No.
Exp.
CIVIL
STATE OF CALIFORNIA

THE CONTRACTOR SHALL POSSESS THE CLASS (OR CLASSES) OF LICENSE AS SPECIFIED IN THE "NOTICE TO BIDDERS."

ATTACHMENT 1: VICINITY MAP

CONTRACT No.	05-0T9704
PROJECT ID	0500020226

PROJECT MANAGER AMY DONATELLO
DESIGN ENGINEER STEVE WYATT

LAST REVISION DATE PLOTTED => 12-SEP-2012

RELATIVE BORDER SCALE 0 1 2 3 USERNAME => s108940

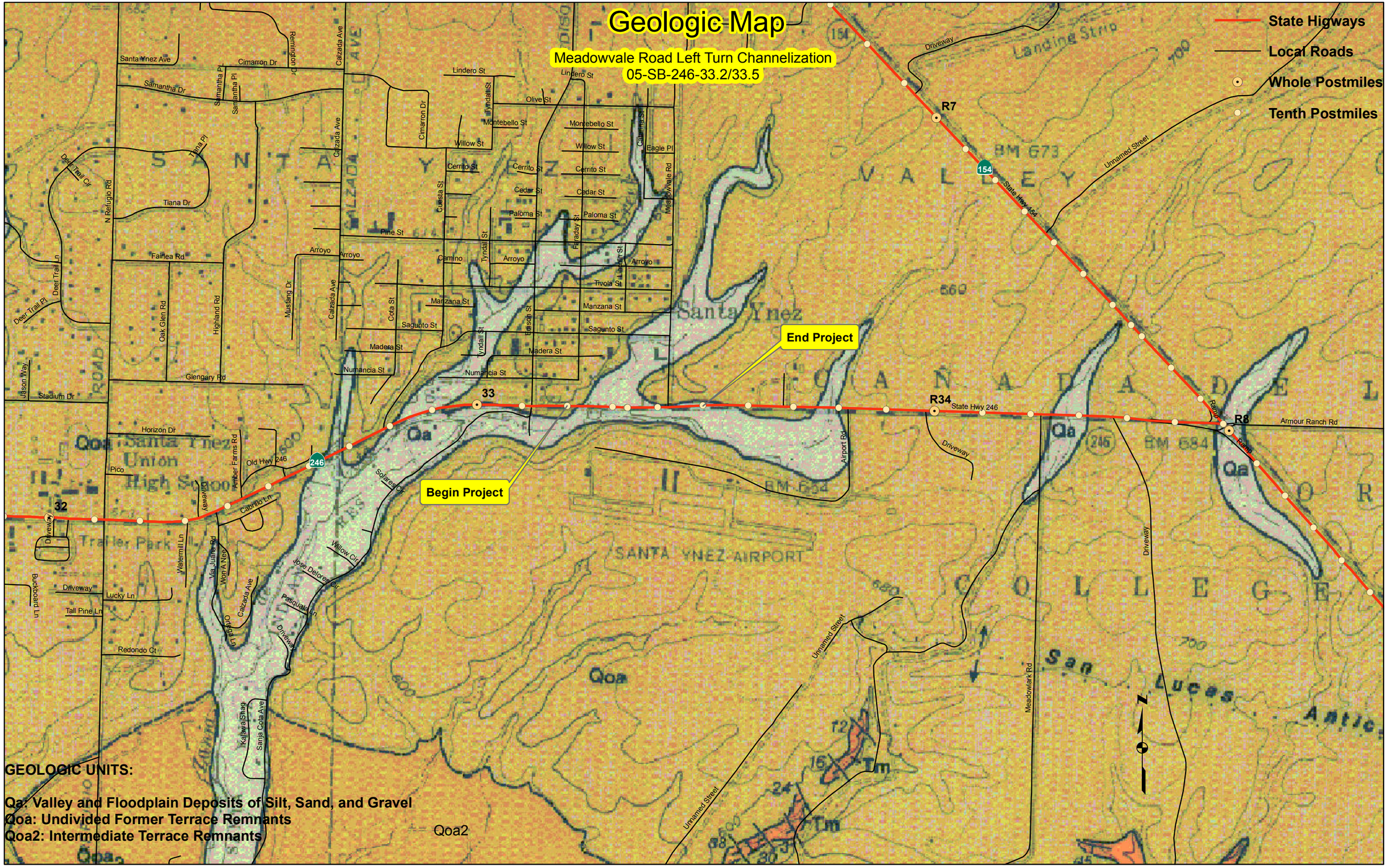

Geologic Mapping by Thomas W. Dibblee, Jr.

ATTACHMENT 2

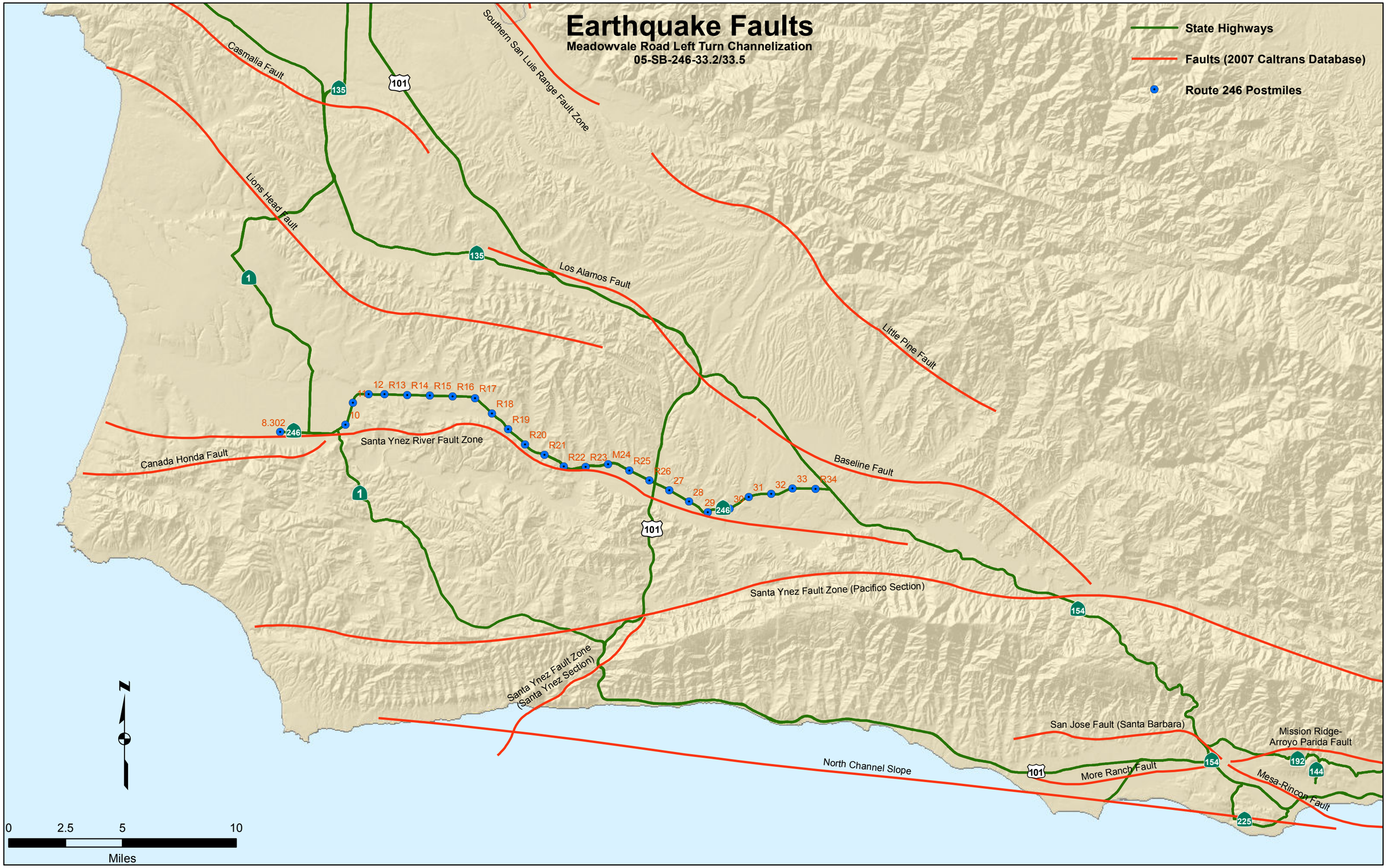

ATTACHMENT 3

ATTACHMENT 4

Geotechnical Design Report
Meadowvale Left Turn Channelization
05-SB-246- 33.2/33.5
EA 05-0C6401, Project ID 0500000021

Log of Test Borings

DIST	COUNTY	ROUTE	POST MILES TOTAL PROJECT	SHEET No	TOTAL SHEETS
05	SB	246	33.2/33.5		

REGISTERED CIVIL ENGINEER

PLANS APPROVAL DATE

REGISTERED PROFESSIONAL ENGINEER No. Exp. CIVIL STATE OF CALIFORNIA

The State of California or its officers or agents shall not be responsible for the accuracy or completeness of electronic copies of this plan sheet.

This LOTB sheet was prepared in accordance with the Caltrans Soil & Rock Logging, Classification, & Presentation Manual (2010 Edition).

BENCH MARK

SB 246 PM 33.43

Fnd 1" ip w/cdot pp & nail
18.57′ Rt "A2" LINE, ℄ RTE 246
Sta 115+35.13
N 2,051,005.56
E 5,936,905.92
Elev = 607.336′ (NAVD88)

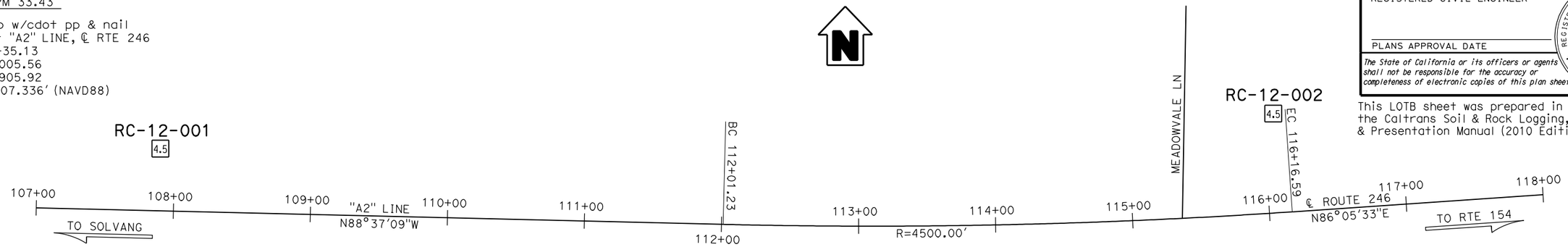

PLAN

1" = 40′

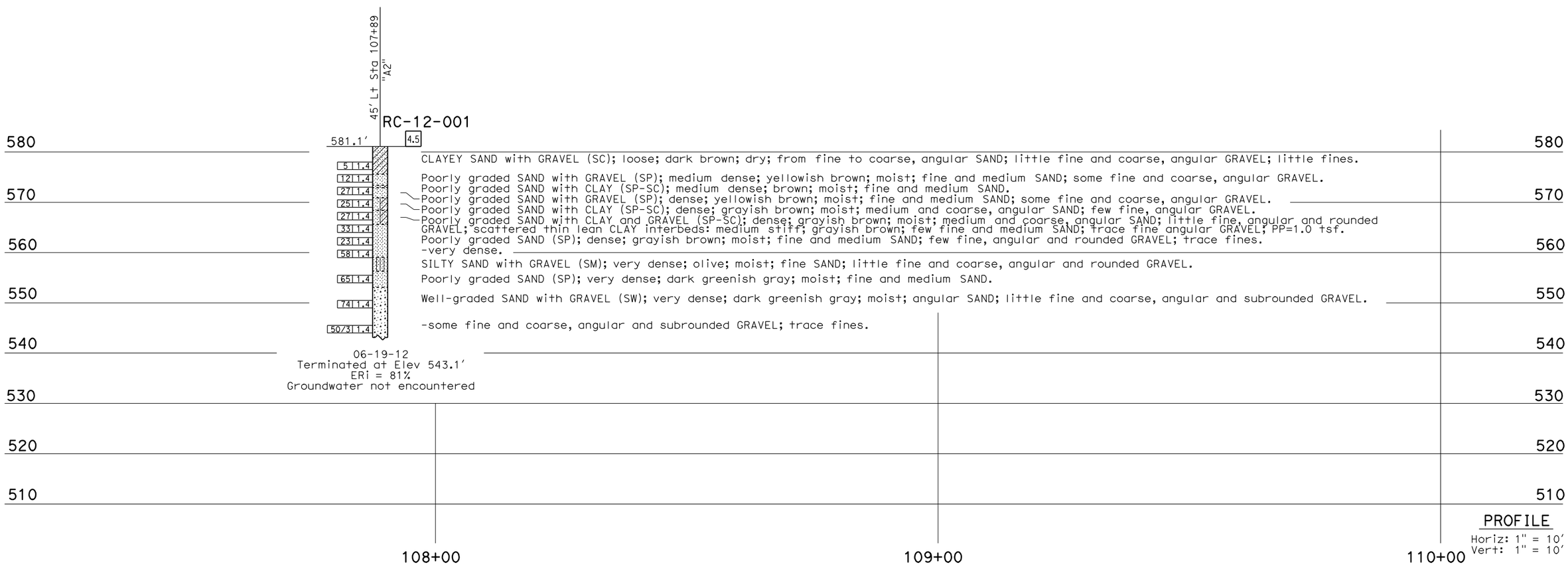

PROFILE

Horiz: 1" = 10′
Vert: 1" = 10′

ENGINEERING SERVICES	GEOTECHNICAL SERVICES	STATE OF CALIFORNIA DEPARTMENT OF TRANSPORTATION	DIVISION OF ENGINEERING SERVICES STRUCTURE DESIGN	BRIDGE NO. N/A	MEADOWVALE LEFT TURN CHANNELIZATION
FUNCTIONAL SUPERVISOR	DRAWN BY: D. Appelbaum	FIELD INVESTIGATION BY:	DESIGN BRANCH X	POST MILE 33.2/33.5	LOG OF TEST BORINGS 1 OF 4
NAME: M. Finegan	CHECKED BY:	D. Appelbaum			

OGS CIVIL LOG OF TEST BORINGS SHEET

ORIGINAL SCALE IN INCHES FOR REDUCED PLANS 0 1 2 3

UNIT: 3654
PROJECT NUMBER & PHASE: 05000202261 CONTRACT NO.: 05-0T9701

DISREGARD PRINTS BEARING EARLIER REVISION DATES

REVISION DATES 07-23-12 07-26-12 SHEET X OF X

FILE => SB246 1thru4.dgn

USERNAME => s108940 DATE PLOTTED => 12-SEP-2012 TIME PLOTTED => 09:30

DIST	COUNTY	ROUTE	POST MILES TOTAL PROJECT	SHEET No	TOTAL SHEETS
05	SB	246	33.2/33.5		

REGISTERED CIVIL ENGINEER

PLANS APPROVAL DATE

REGISTERED PROFESSIONAL ENGINEER No. Exp. CIVIL STATE OF CALIFORNIA

The State of California or its officers or agents shall not be responsible for the accuracy or completeness of electronic copies of this plan sheet.

This LOTB sheet was prepared in accordance with the Caltrans Soil & Rock Logging, Classification, & Presentation Manual (2010 Edition).

FOR PLAN VIEW, SEE
"LOG OF TEST BORINGS 1 OF 4"

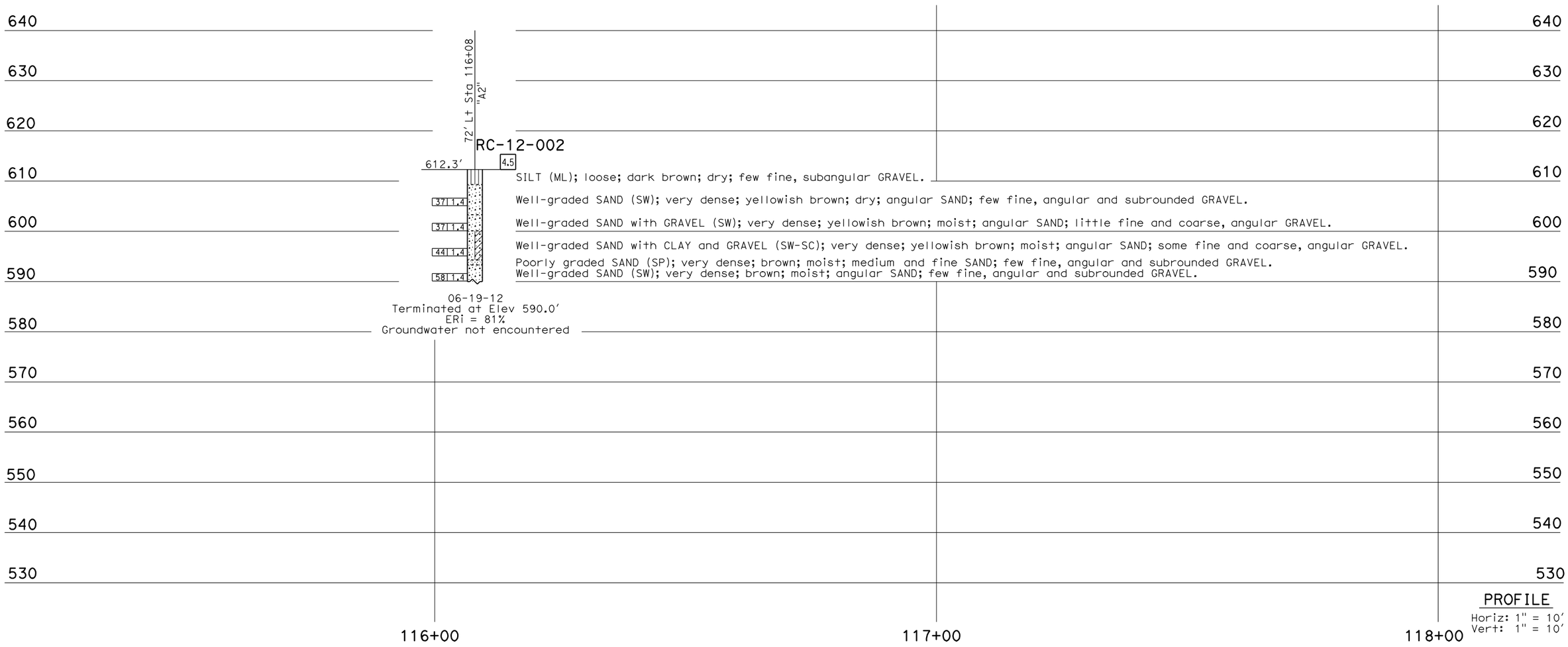

PROFILE
Horiz: 1" = 10'
Vert: 1" = 10'

ENGINEERING SERVICES	GEOTECHNICAL SERVICES	STATE OF CALIFORNIA DEPARTMENT OF TRANSPORTATION	DIVISION OF ENGINEERING SERVICES STRUCTURE DESIGN DESIGN BRANCH X	BRIDGE NO. N/A POST MILE 33.2/33.5	MEADOWVALE LEFT TURN CHANNELIZATION LOG OF TEST BORINGS 2 OF 4
FUNCTIONAL SUPERVISOR NAME: M. Finegan	DRAWN BY: D. Appelbaum CHECKED BY:	FIELD INVESTIGATION BY: D. Appelbaum			

OGS CIVIL LOG OF TEST BORINGS SHEET

ORIGINAL SCALE IN INCHES FOR REDUCED PLANS 0 1 2 3

UNIT: 3657
PROJECT NUMBER & PHASE: 05000202261 CONTRACT NO.: 05-0T9701

DISREGARD PRINTS BEARING EARLIER REVISION DATES

REVISION DATES: 07-23-12 07-26-12 SHEET X OF X

FILE => SB246 1thru4.dgn

USERNAME => s108940 DATE PLOTTED => 12-SEP-2012 TIME PLOTTED => 09:32

REFERENCE: CALTRANS SOIL & ROCK LOGGING, CLASSIFICATION, AND PRESENTATION MANUAL (2010)

DIST	COUNTY	ROUTE	POST MILES TOTAL PROJECT	SHEET No	TOTAL SHEETS
05	SB	246	33.2/33.5		

REGISTERED CIVIL ENGINEER

PLANS APPROVAL DATE

REGISTERED PROFESSIONAL ENGINEER No. Exp. CIVIL STATE OF CALIFORNIA

The State of California or its officers or agents shall not be responsible for the accuracy or completeness of electronic copies of this plan sheet.

CEMENTATION

Description	Criteria
Weak	Crumbles or breaks with handling or little finger pressure.
Moderate	Crumbles or breaks with considerable finger pressure.
Strong	Will not crumble or break with finger pressure.

BOREHOLE IDENTIFICATION

Symbol	Hole Type	Description
Size	A	Auger Boring (hollow or solid stem bucket)
Size	R RW RC P	Rotary drilled boring (conventional) Rotary drilled with self-casing wire-line Rotary core with continuously-sampled, self-casing wire-line Rotary percussion boring (air)
Size	R	Rotary drilled diamond core
Size	HD HA	Hand driven (1-inch soil tube) Hand Auger
●	D	Dynamic Cone Penetration Boring
▲	CPT	Cone Penetration Test (ASTM D 5778)
⬚	O	Other (note on LOTB)

Note: Size in inches.

CONSISTENCY OF COHESIVE SOILS

Description	Shear Strength (tsf)	Pocket Penetrometer Measurement, PP, (tsf)	Torvane Measurement, TV, (tsf)	Vane Shear Measurement, VS, (tsf)
Very Soft	Less than 0.12	Less than 0.25	Less than 0.12	Less than 0.12
Soft	0.12 - 0.25	0.25 - 0.5	0.12 - 0.25	0.12 - 0.25
Medium Stiff	0.25 - 0.5	0.5 - 1	0.25 - 0.5	0.25 - 0.5
Stiff	0.5 - 1	1 - 2	0.5 - 1	0.5 - 1
Very Stiff	1 - 2	2 - 4	1 - 2	1 - 2
Hard	Greater than 2	Greater than 4	Greater than 2	Greater than 2

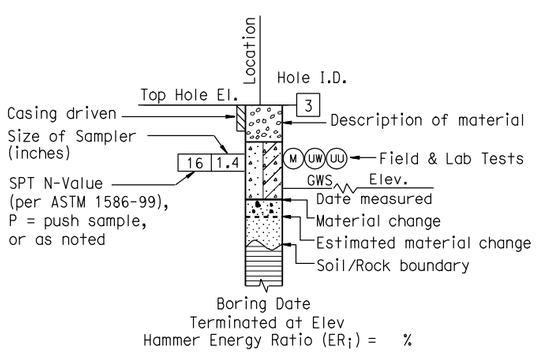

ROTARY BORING

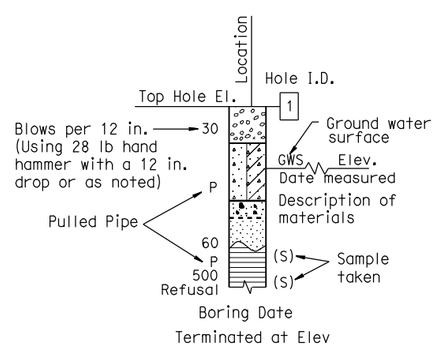

HAND BORING

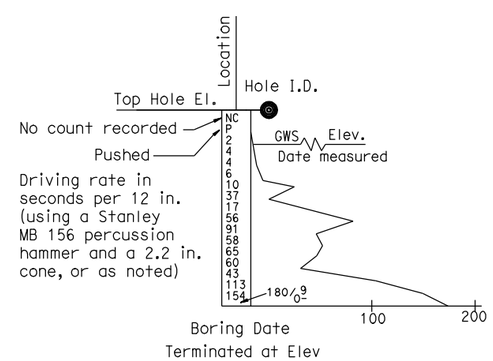

DYNAMIC CONE PENETRATION BORING

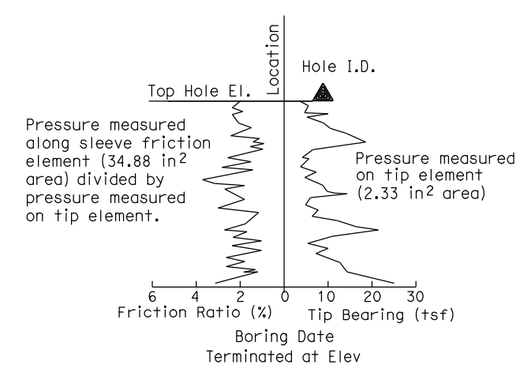

CONE PENETRATION TEST (CPT) BORING

ENGINEERING SERVICES	GEOTECHNICAL SERVICES	STATE OF CALIFORNIA DEPARTMENT OF TRANSPORTATION	DIVISION OF ENGINEERING SERVICES STRUCTURE DESIGN DESIGN BRANCH X	BRIDGE NO. N/A POST MILE 33.2/33.7	MEADOWVALE LEFT TURN CHANNELIZATION LOG OF TEST BORINGS 3 OF 4
	PREPARED BY: D. Appelbaum				

GS LOTB SOIL LEGEND

ORIGINAL SCALE IN INCHES FOR REDUCED PLANS 0 1 2 3

UNIT: 3657
PROJECT NUMBER & PHASE: 05000202261 CONTRACT NO.: 05-0T9701

DISREGARD PRINTS BEARING EARLIER REVISION DATES

REVISION DATES				SHEET	OF
07-23-12				X	X

FILE => SB246 1thru4.dgn

USERNAME => s108940 DATE PLOTTED => 12-SEP-2012 TIME PLOTTED => 09:33

REFERENCE: CALTRANS SOIL & ROCK LOGGING, CLASSIFICATION, AND PRESENTATION MANUAL (2010)

DIST	COUNTY	ROUTE	POST MILES TOTAL PROJECT	SHEET No	TOTAL SHEETS
05	SB	246	33.2/33.5		

REGISTERED CIVIL ENGINEER

PLANS APPROVAL DATE

REGISTERED PROFESSIONAL ENGINEER No. Exp. CIVIL STATE OF CALIFORNIA

The State of California or its officers or agents shall not be responsible for the accuracy or completeness of electronic copies of this plan sheet.

GROUP SYMBOLS AND NAMES

Graphic/Symbol	Group Names	Graphic/Symbol	Group Names
GW	Well-graded GRAVEL Well-graded GRAVEL with SAND	CL	Lean CLAY Lean CLAY with SAND Lean CLAY with GRAVEL SANDY lean CLAY SANDY lean CLAY with GRAVEL GRAVELLY lean CLAY GRAVELLY lean CLAY with SAND
GP	Poorly-graded GRAVEL Poorly-graded GRAVEL with SAND		
GW-GM	Well-graded GRAVEL with SILT Well-graded GRAVEL with SILT and SAND	CL-ML	SILTY CLAY SILTY CLAY with SAND SILTY CLAY with GRAVEL SANDY SILTY CLAY SANDY SILTY CLAY with GRAVEL GRAVELLY SILTY CLAY GRAVELLY SILTY CLAY with SAND
GW-GC	Well-graded GRAVEL with CLAY (or SILTY CLAY) Well-graded GRAVEL with CLAY and SAND (or SILTY CLAY and SAND)		
GP-GM	Poorly-graded GRAVEL with SILT Poorly-graded GRAVEL with SILT and SAND	ML	SILT SILT with SAND SILT with GRAVEL SANDY SILT SANDY SILT with GRAVEL GRAVELLY SILT GRAVELLY SILT with SAND
GP-GC	Poorly-graded GRAVEL with CLAY (or SILTY CLAY) Poorly-graded GRAVEL with CLAY and SAND (or SILTY CLAY and SAND)		
GM	SILTY GRAVEL SILTY GRAVEL with SAND	OL	ORGANIC lean CLAY ORGANIC lean CLAY with SAND ORGANIC lean CLAY with GRAVEL SANDY ORGANIC lean CLAY SANDY ORGANIC lean CLAY with GRAVEL GRAVELLY ORGANIC lean CLAY GRAVELLY ORGANIC lean CLAY with SAND
GC	CLAYEY GRAVEL CLAYEY GRAVEL with SAND		
GC-GM	SILTY, CLAYEY GRAVEL SILTY, CLAYEY GRAVEL with SAND	OL	ORGANIC SILT ORGANIC SILT with SAND ORGANIC SILT with GRAVEL SANDY ORGANIC SILT SANDY ORGANIC SILT with GRAVEL GRAVELLY ORGANIC SILT GRAVELLY ORGANIC SILT with SAND
SW	Well-graded SAND Well-graded SAND with GRAVEL		
SP	Poorly-graded SAND Poorly-graded SAND with GRAVEL	CH	Fat CLAY Fat CLAY with SAND Fat CLAY with GRAVEL SANDY fat CLAY SANDY fat CLAY with GRAVEL GRAVELLY fat CLAY GRAVELLY fat CLAY with SAND
SW-SM	Well-graded SAND with SILT Well-graded SAND with SILT and GRAVEL		
SW-SC	Well-graded SAND with CLAY (or SILTY CLAY) Well-graded SAND with CLAY and GRAVEL (or SILTY CLAY and GRAVEL)	MH	Elastic SILT Elastic SILT with SAND Elastic SILT with GRAVEL SANDY elastic SILT SANDY elastic SILT with GRAVEL GRAVELLY elastic SILT GRAVELLY elastic SILT with SAND
SP-SM	Poorly-graded SAND with SILT Poorly-graded SAND with SILT and GRAVEL		
SP-SC	Poorly-graded SAND with CLAY (or SILTY CLAY) Poorly-graded SAND with CLAY and GRAVEL (or SILTY CLAY and GRAVEL)	OH	ORGANIC fat CLAY ORGANIC fat CLAY with SAND ORGANIC fat CLAY with GRAVEL SANDY ORGANIC fat CLAY SANDY ORGANIC fat CLAY with GRAVEL GRAVELLY ORGANIC fat CLAY GRAVELLY ORGANIC fat CLAY with SAND
SM	SILTY SAND SILTY SAND with GRAVEL		
SC	CLAYEY SAND CLAYEY SAND with GRAVEL	OH	ORGANIC elastic SILT ORGANIC elastic SILT with SAND ORGANIC elastic SILT with GRAVEL SANDY ORGANIC elastic SILT SANDY ORGANIC elastic SILT with GRAVEL GRAVELLY ORGANIC elastic SILT GRAVELLY ORGANIC elastic SILT with SAND
SC-SM	SILTY, CLAYEY SAND SILTY, CLAYEY SAND with GRAVEL		
PT	PEAT	OL/OH	ORGANIC SOIL ORGANIC SOIL with SAND ORGANIC SOIL with GRAVEL SANDY ORGANIC SOIL SANDY ORGANIC SOIL with GRAVEL GRAVELLY ORGANIC SOIL GRAVELLY ORGANIC SOIL with SAND
	COBBLES COBBLES and BOULDERS BOULDERS		

FIELD AND LABORATORY TESTING

- (C) Consolidation (ASTM D 2435)
- (CL) Collapse Potential (ASTM D 5333)
- (CP) Compaction Curve (CTM 216)
- (CR) Corrosivity Testing (CTM 643, CTM 422, CTM 417)
- (CU) Consolidated Undrained Triaxial (ASTM D 4767)
- (DS) Direct Shear (ASTM D 3080)
- (EI) Expansion Index (ASTM D 4829)
- (M) Moisture Content (ASTM D 2216)
- (OC) Organic Content-% (ASTM D 2974)
- (P) Permeability (CTM 220)
- (PA) Particle Size Analysis (ASTM D 422)
- (PI) Plasticity Index (AASHTO T 90) Liquid Limit (AASHTO T 89)
- (PL) Point Load Index (ASTM D 5731)
- (PM) Pressure Meter
- (R) R-Value (CTM 301)
- (SE) Sand Equivalent (CTM 217)
- (SG) Specific Gravity (AASHTO T 100)
- (SL) Shrinkage Limit (ASTM D 427)
- (SW) Swell Potential (ASTM D 4546)
- (UC) Unconfined Compression-Soil (ASTM D 2166) Unconfined Compression-Rock (ASTM D 2938)
- (UU) Unconsolidated Undrained Triaxial (ASTM D 2850)
- (UW) Unit Weight (ASTM D 4767)

APPARENT DENSITY OF COHESIONLESS SOILS

Description	SPT N_{60} (Blows / 12 in.)
Very Loose	0 - 5
Loose	5 - 10
Medium Dense	10 - 30
Dense	30 - 50
Very Dense	Greater than 50

MOISTURE

Description	Criteria
Dry	No discernable moisture
Moist	Moisture present, but no free water
Wet	Visible free water

PERCENT OR PROPORTION OF SOILS

Description	Criteria
Trace	Particles are present but estimated to be less than 5%
Few	5% - 10%
Little	15% - 25%
Some	30% - 45%
Mostly	50% - 100%

PARTICLE SIZE

Description		Size (in.)
Boulder		Greater than 12
Cobble		3 - 12
Gravel	Coarse	3/4 - 3
	Fine	1/5 - 3/4
Sand	Coarse	1/16 - 1/5
	Medium	1/64 - 1/16
	Fine	1/300 - 1/64
Silt and Clay		Less than 1/300

ENGINEERING SERVICES

GEOTECHNICAL SERVICES

PREPARED BY: D. Appelbaum

STATE OF CALIFORNIA DEPARTMENT OF TRANSPORTATION

DIVISION OF ENGINEERING SERVICES STRUCTURE DESIGN DESIGN BRANCH X

BRIDGE NO. N/A

POST MILE 33.2/33.5

MEADOWVALE LEFT TURN CHANNELIZATION

LOG OF TEST BORINGS 4 OF 4

GS LOTB SOIL LEGEND

ORIGINAL SCALE IN INCHES FOR REDUCED PLANS 0 1 2 3

UNIT: 3657
PROJECT NUMBER & PHASE: 05000202261
CONTRACT NO.: 05-0T9701

DISREGARD PRINTS BEARING EARLIER REVISION DATES

REVISION DATES 07-23-12

SHEET X OF X

FILE => SB246 1thru4.dgn

USERNAME => s108940 DATE PLOTTED => 12-SEP-2012 TIME PLOTTED => 09:34

Dist	COUNTY	ROUTE	POST MILES TOTAL PROJECT	SHEET No.	TOTAL SHEETS
05	SB	246	33.2/33.5		

REGISTERED CIVIL ENGINEER DATE

PLANS APPROVAL DATE

REGISTERED PROFESSIONAL ENGINEER No. Exp. CIVIL STATE OF CALIFORNIA

THE STATE OF CALIFORNIA OR ITS OFFICERS OR AGENTS SHALL NOT BE RESPONSIBLE FOR THE ACCURACY OR COMPLETENESS OF SCANNED COPIES OF THIS PLAN SHEET.

Design Parameters:

Friction Angle for Fill = 33 Degrees
Cohesion = 0 psf
Compacted Unit Weight = 125 pcf
Factor of Safety - Global = 1.5
Geosynthetic Long Term Design Strength (LTDS) = 1 Kip/Ft

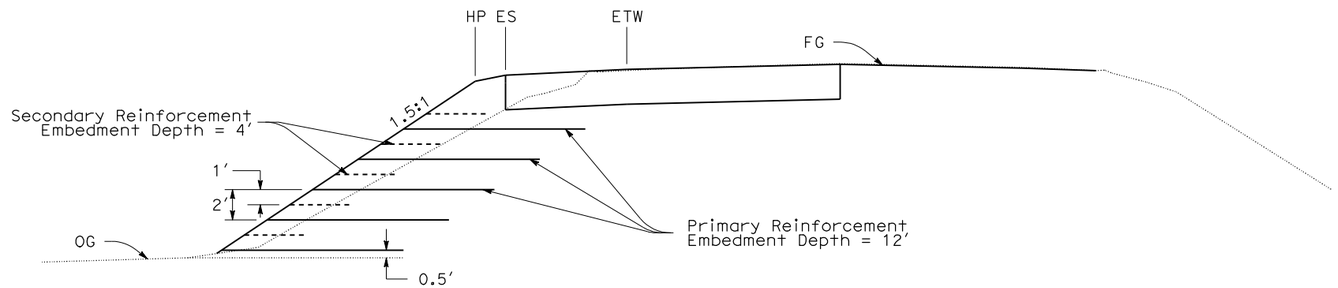

TYPICAL CROSS SECTION

SCALE: 1"=5'

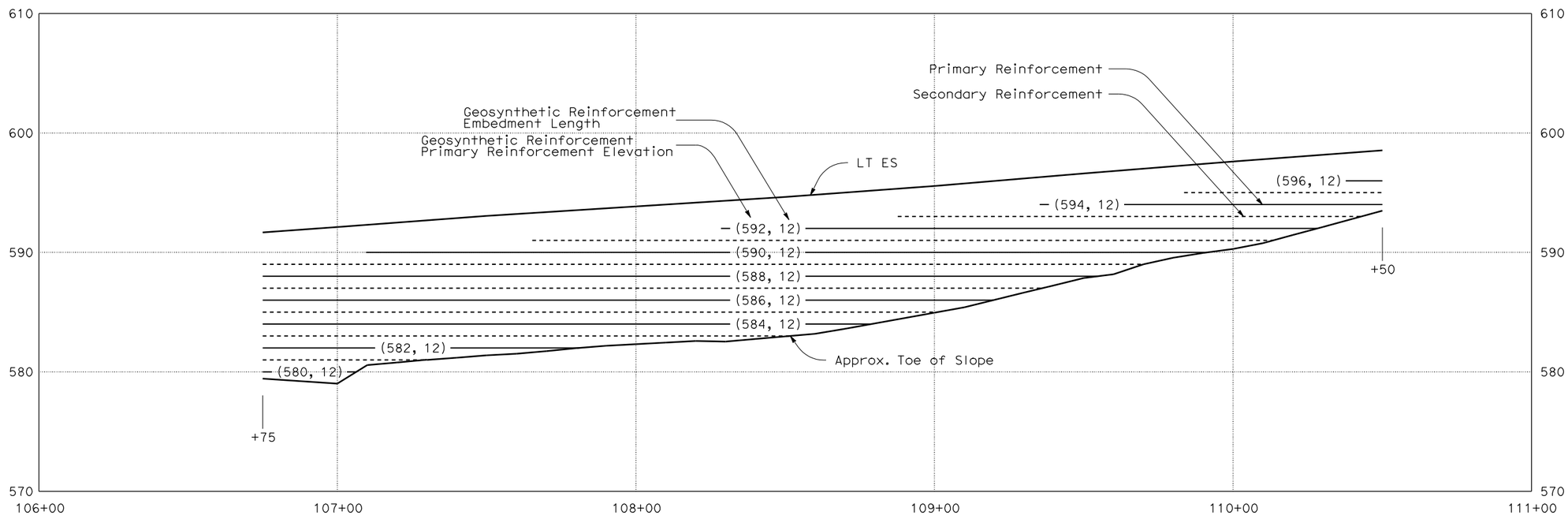

MIRROR ELEVATION

SCALE Horiz: 1"=20'
Vert: 1"=5'

ATTACHMENT 5

CONSTRUCTION DETAILS
(GEOSYNTHETIC REINFORCED EMBANKEMNT)
C-3

STATE OF CALIFORNIA - DEPARTMENT OF TRANSPORTATION
Caltrans GEOTECHNICAL DESIGN

FUNCTIONAL SUPERVISOR: MIKE FINEGAN
CALCULATED-DESIGNED BY: D.L. APPELBAUM
CHECKED BY
REVISED BY
DATE REVISED

LAST REVISION | DATE PLOTTED => 18-SEP-2012

USERNAME => s108940 | RELATIVE BORDER SCALE 0 1 2 3 | UNIT 7957 | PROJECT NUMBER & PHASE

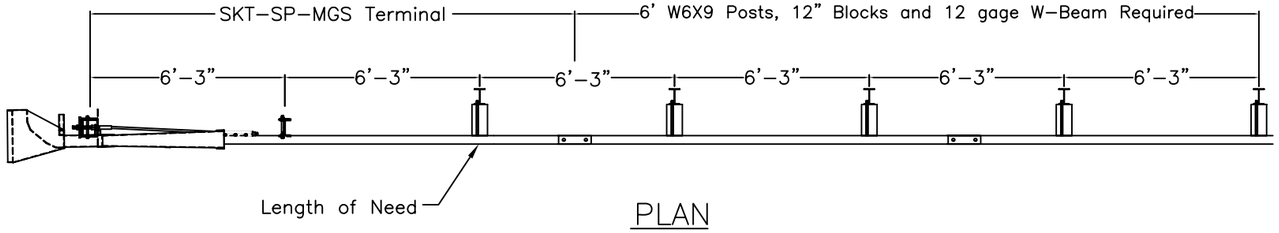

PLAN

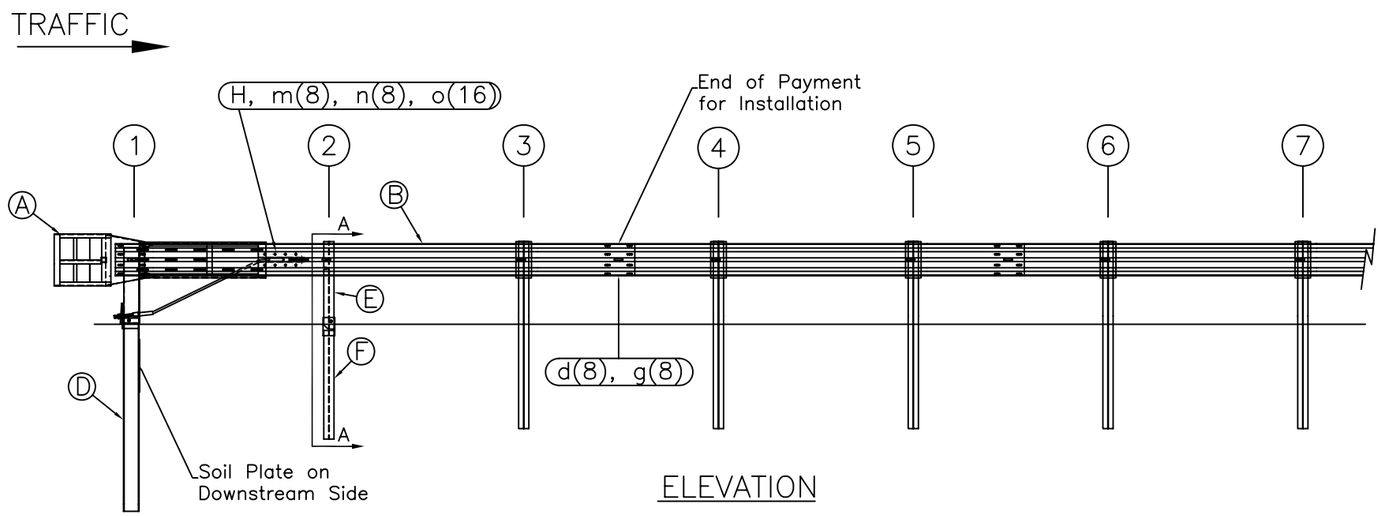

ELEVATION

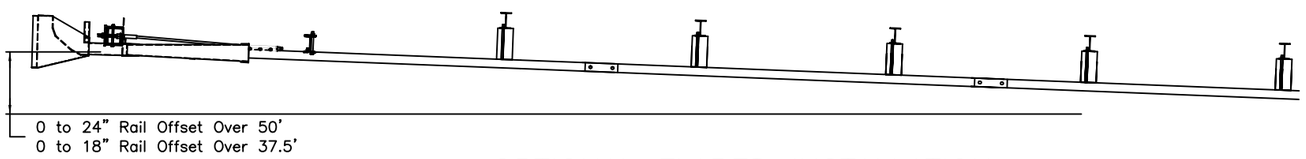

OPTIONAL FLARED INSTALLATION

25:1 maximum flare rate

ITEM	QTY	BILL OF MATERIALS	ITEM NO.
A	1	IMPACT HEAD	S3000
B	1	W-BEAM GUARDRAIL END SECTION, 12 Ga.	MGS-SF1303
C	1	FIRST POST TOP (6X6X$\frac{1}{8}$" Tube)	TPHP1A
D	1	FIRST POST BOTTOM (6' W6X15)	TPHP1B
E	1	SECOND POST ASSEMBLY TOP	UHP2A
F	1	SECOND POST ASSEMBLY BOTTOM	HP3B
G	1	BEARING PLATE	E750
H	1	CABLE ANCHOR BOX	S760
J	1	BCT CABLE ANCHOR ASSEMBLY	E770
		HARDWARE (ALL DIMENSIONS IN INCHES)	
a	2	5/16 x 1 HEX BOLT GRD 5	B5160104A
b	4	5/16 WASHER	W0516
c	2	5/16 HEX NUT	N0516
d	9	5/8 Dia. x 1 1/4 SPLICE BOLT (POST #2)	B580122
e	1	5/8 Dia. x 9 HEX BOLT GRD 5	B580904A
f	3	5/8 WASHER	W050
g	10	5/8 Dia. H.G.R NUT	N050
h	1	3/4 Dia. x 8 1/2 HEX BOLT GRD A449	B340854A
j	1	3/4 Dia. HEX NUT	N030
k	2	1 ANCHOR CABLE HEX NUT	N100
l	2	1 ANCHOR CABLE WASHER	W100
m	8	CABLE ANCHOR BOX SHOULDER BOLT	SB58A
n	8	1/2 A325 STRUCTURAL NUT	N055A
o	16	1 1/16 OD x 9/16 ID A325 STR. WASHER	W050A

GENERAL NOTES:

1. All bolts, nuts, cable assemblies, cable anchors and bearing plates shall be galvanized.
2. The lower sections of the Posts 1&2 shall not protrude more than 4 in above the ground (measured along a 5' cord). Site grading may be necessary to meet this requirement.
3. The lower sections of the hinged posts should not be driven with the upper post attached. If the post is placed in a drilled hole, the backfill material must be satisfactorily compacted to prevent settlement.
4. When competent rock is encountered, a 12" Ø post hole, 20 in. deep cored into the rock surface may be used if approved by the engineer for post 1. Granular material will be placed in the bottom of the hole, approximately 2.5" deep to provide drainage. The first post can be field cut to length, placed in the hole and backfilled with suitable backfill. The soil plate may be trimmed if required.
5. A site evaluation should be considered if there is less than 25' between the outlet side of the terminal and any adjacent driving lane.
6. The breakaway cable assembly must be taut. A locking device (vice grips or channel lock pliers) should be used to prevent the cable from twisting when tightening nuts.

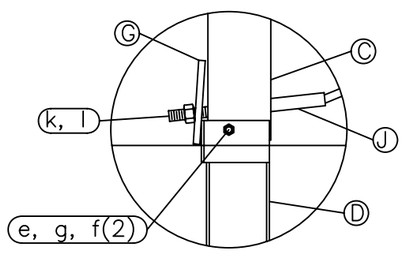

Post #1 Connection Detail

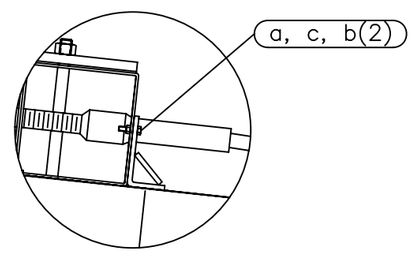

Impact Head Connection Detail

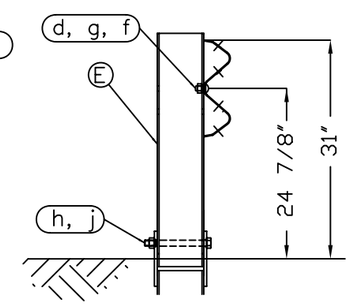

SECTION A-A

Post #2

RSI
Road Systems, Inc.
Big Spring, TX
Phone: 432-263-2435
or Phone: 330-346-0721

SKT-SP-MGS Terminal
Midwest Guardrail System
31" Top of Rail

Sheet: 1
Date: 02/24/10
By: JRR
Drawing Name: SKT-SP-S-MGS
Scale: None
Rev: 0

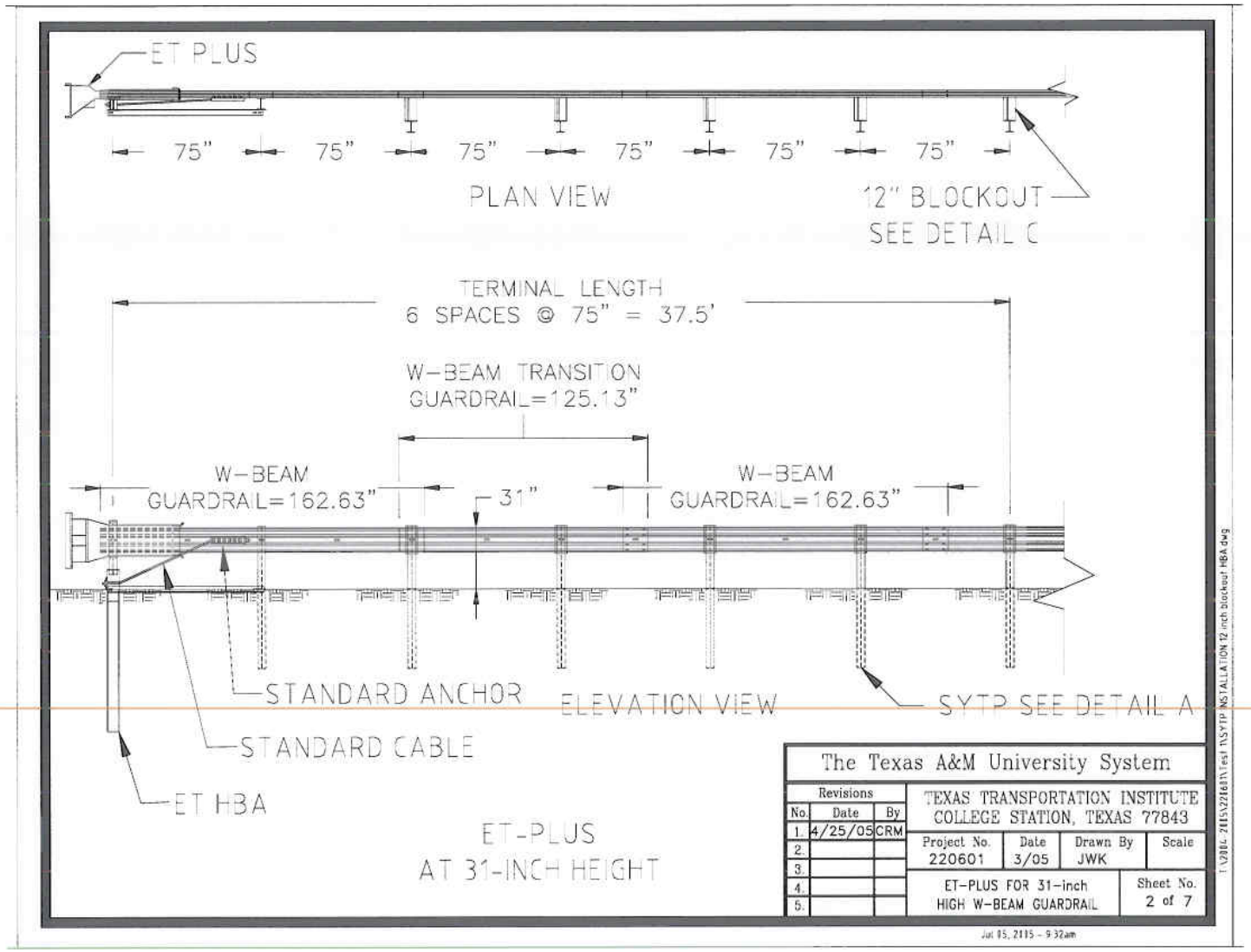

Figure 2. Details of the ET-PLUS for 787 mm (31-inch) high W-beam guardrail (upstream terminal).