ACNH-Q101(193)E

Dist	COUNTY	ROUTE	POST MILES TOTAL PROJECT	SHEET No.	TOTAL SHEETS
05	Mon	101	R10.8/R12.6	1	38

STATE OF CALIFORNIA
DEPARTMENT OF TRANSPORTATION

PROJECT PLANS FOR CONSTRUCTION ON
STATE HIGHWAY

IN MONTEREY COUNTY
NEAR BRADLEY FROM 1.1 MILES NORTH OF JOLON ROAD UNDERCROSSING TO 2.9 MILES NORTH OF JOLON ROAD UNDERCROSSING

TO BE SUPPLEMENTED BY STANDARD PLANS DATED MAY 2006

INDEX OF PLANS

SHEET No.	DESCRIPTION
1	TITLE AND LOCATION MAP
2-5	TYPICAL CROSS SECTIONS
6-12	LAYOUTS
13	SUPERELEVATION DIAGRAM
14-19	UTILITY PLANS
20	CONSTRUCTION AREA SIGNS
21-28	PAVEMENT DELINEATION PLANS AND QUANTITIES
29	SUMMARY OF QUANTITIES
30-38	REVISED AND NEW STANDARD PLANS

THE STANDARD PLANS LIST APPLICABLE TO THIS CONTRACT IS INCLUDED IN THE NOTICE TO BIDDERS AND SPECIAL PROVISIONS BOOK.

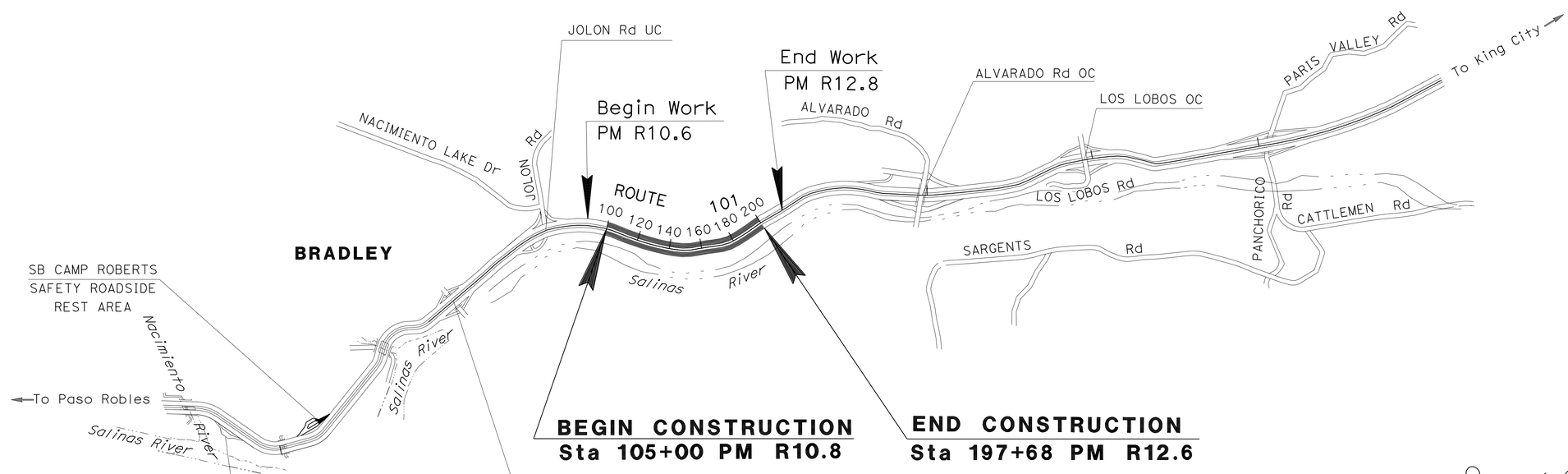

NO SCALE

THE CONTRACTOR SHALL POSSESS THE CLASS (OR CLASSES) OF LICENSE AS SPECIFIED IN THE "NOTICE TO BIDDERS."

Khalid A Dahir 07-15-10
PROJECT ENGINEER DATE
REGISTERED CIVIL ENGINEER

September 20, 2010
PLANS APPROVAL DATE

REGISTERED PROFESSIONAL ENGINEER KHALID A. DAHIR No. 70240 Exp. 9/30/10 CIVIL STATE OF CALIFORNIA

THE STATE OF CALIFORNIA OR ITS OFFICERS OR AGENTS SHALL NOT BE RESPONSIBLE FOR THE ACCURACY OR COMPLETENESS OF SCANNED COPIES OF THIS PLAN SHEET.

CONTRACT No.	05-0R7604
PROJECT ID	0500000377

PROJECT MANAGER: KEN DOSTALEK
DESIGN ENGINEER: SCOTT SHAVER

LAST REVISION 07-12-10 | DATE PLOTTED => 16-NOV-2010 | TIME PLOTTED => 13:15

Dist	COUNTY	ROUTE	POST MILES TOTAL PROJECT	SHEET No.	TOTAL SHEETS
05	Mon	101	R10.8/R12.6	2	38

Khalid A Dahir 07-15-10
REGISTERED CIVIL ENGINEER DATE

9-20-10
PLANS APPROVAL DATE

REGISTERED PROFESSIONAL ENGINEER KHALID A. DAHIR No. 70240 Exp. 9/30/10 CIVIL STATE OF CALIFORNIA

THE STATE OF CALIFORNIA OR ITS OFFICERS OR AGENTS SHALL NOT BE RESPONSIBLE FOR THE ACCURACY OR COMPLETENESS OF SCANNED COPIES OF THIS PLAN SHEET.

NOTES:

1. DIMENSIONS OF THE PAVEMENT STRUCTURES (STRUCTURAL SECTIONS) ARE SUBJECT TO TOLERANCES SPECIFIED IN THE STANDARD SPECIFICATIONS.
2. SUPERELEVATION IS SHOWN ON THE SUPERELEVATION DIAGRAMS.
3. APPLY FOG SEAL ON NEW SHOULDER PAVEMENT.

DESIGN DESIGNATION (MON-101)

2010 ADT= 16 530 D = 55%
2020 ADT= 20 390 T = 4%
2030 ADT= 24 250 V = 65 MPH
2020 DHV= 1 339
2030 DHV= 1 531

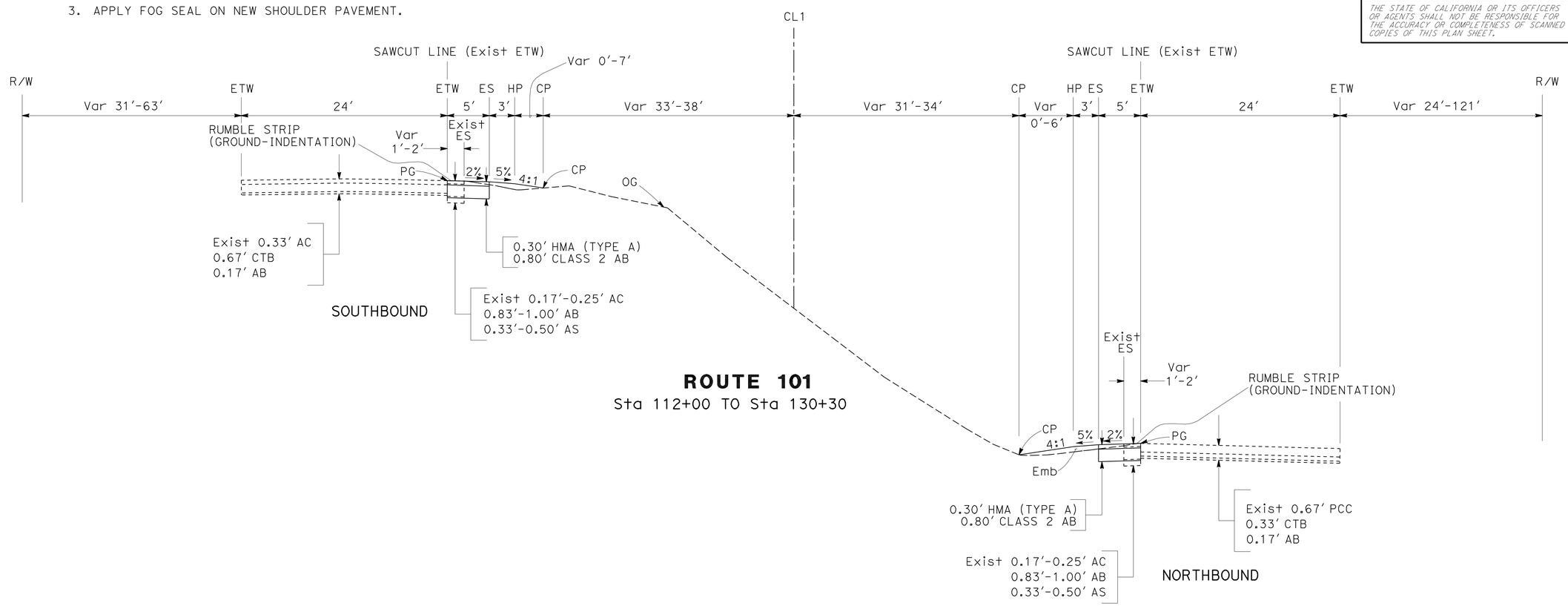

ROUTE 101
Sta 112+00 TO Sta 130+30

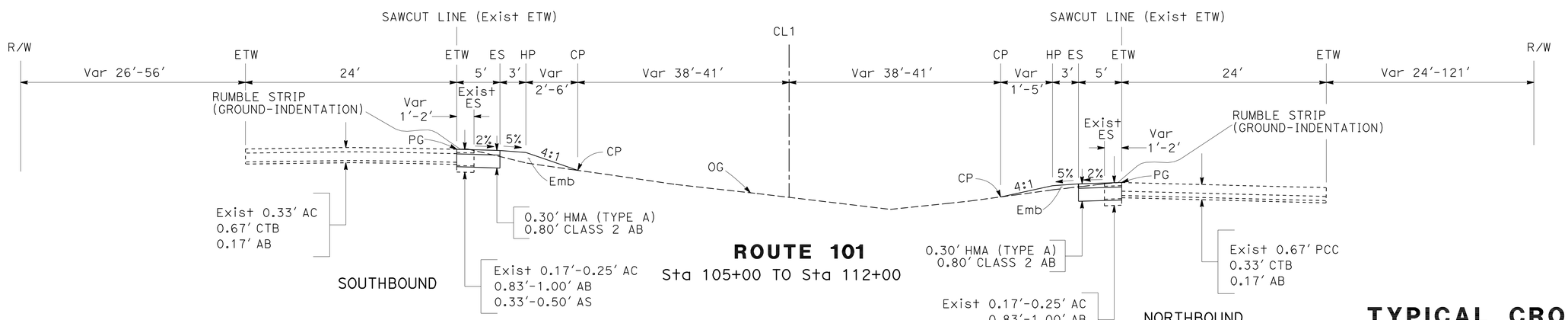

ROUTE 101
Sta 105+00 TO Sta 112+00

TYPICAL CROSS SECTIONS

NO SCALE **X-1**

STATE OF CALIFORNIA - DEPARTMENT OF TRANSPORTATION
Caltrans® DESIGN

FUNCTIONAL SUPERVISOR: SCOTT SHAVER
CALCULATED-DESIGNED BY: JOHNNY REYES
CHECKED BY: KHALID DAHIR
REVISED BY / DATE REVISED

LAST REVISION 07-14-10
DATE PLOTTED => 21-SEP-2010
TIME PLOTTED => 13:47

Dist	COUNTY	ROUTE	POST MILES TOTAL PROJECT	SHEET No.	TOTAL SHEETS
05	Mon	101	R10.8/R12.6	3	38

REGISTERED CIVIL ENGINEER 07-15-10 DATE

9-20-10
PLANS APPROVAL DATE

REGISTERED PROFESSIONAL ENGINEER KHALID A. DAHIR No. 70240 Exp. 9/30/10 CIVIL STATE OF CALIFORNIA

THE STATE OF CALIFORNIA OR ITS OFFICERS OR AGENTS SHALL NOT BE RESPONSIBLE FOR THE ACCURACY OR COMPLETENESS OF SCANNED COPIES OF THIS PLAN SHEET.

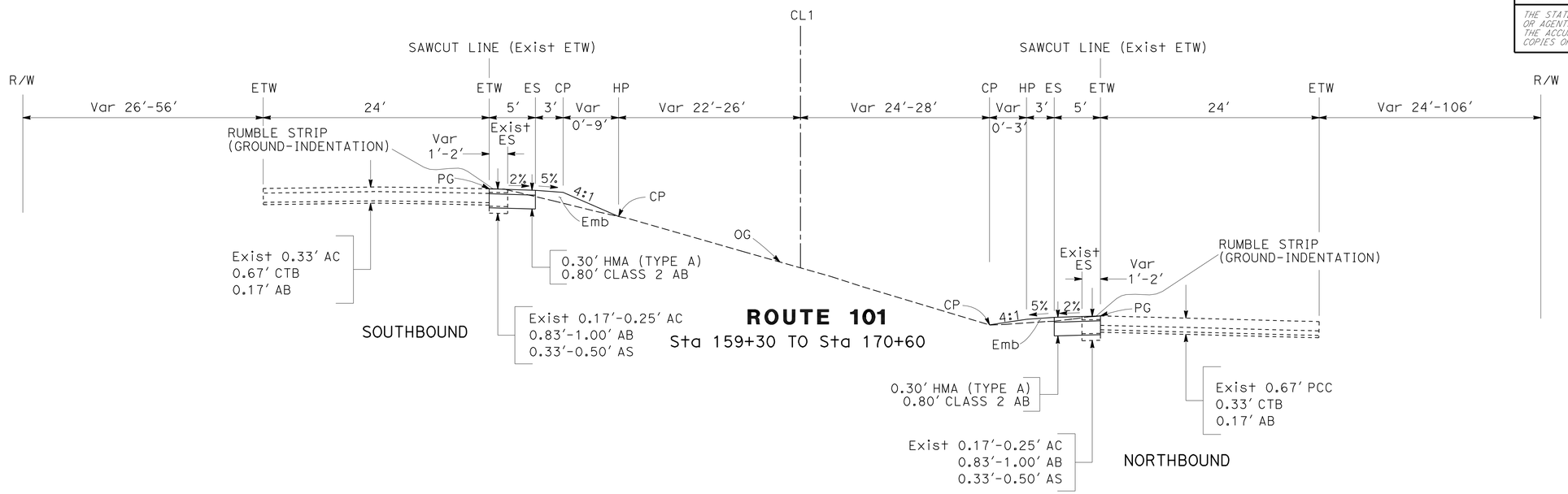

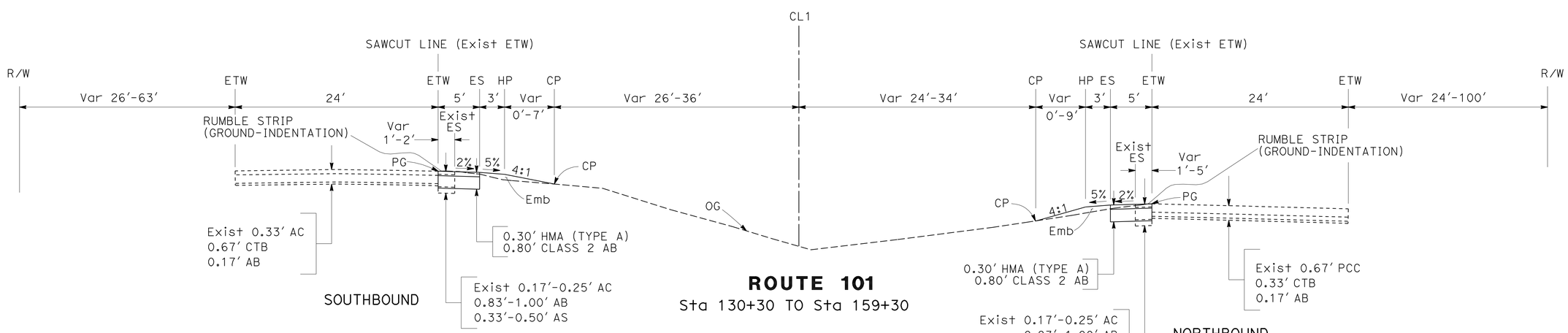

TYPICAL CROSS SECTIONS

NO SCALE **X-2**

STATE OF CALIFORNIA - DEPARTMENT OF TRANSPORTATION
Caltrans® DESIGN

FUNCTIONAL SUPERVISOR: SCOTT SHAVER
CALCULATED-DESIGNED BY: JOHNNY REYES
CHECKED BY: KHALID DAHIR
REVISED BY / DATE REVISED

LAST REVISION 07-14-10
DATE PLOTTED => 22-SEP-2010
TIME PLOTTED => 09:34

Dist	COUNTY	ROUTE	POST MILES TOTAL PROJECT	SHEET No.	TOTAL SHEETS
05	Mon	101	R10.8/R12.6	4	38

REGISTERED CIVIL ENGINEER 07-15-10 DATE

9-20-10
PLANS APPROVAL DATE

REGISTERED PROFESSIONAL ENGINEER KHALID A. DAHIR No. 70240 Exp. 9/30/10 CIVIL STATE OF CALIFORNIA

THE STATE OF CALIFORNIA OR ITS OFFICERS OR AGENTS SHALL NOT BE RESPONSIBLE FOR THE ACCURACY OR COMPLETENESS OF SCANNED COPIES OF THIS PLAN SHEET.

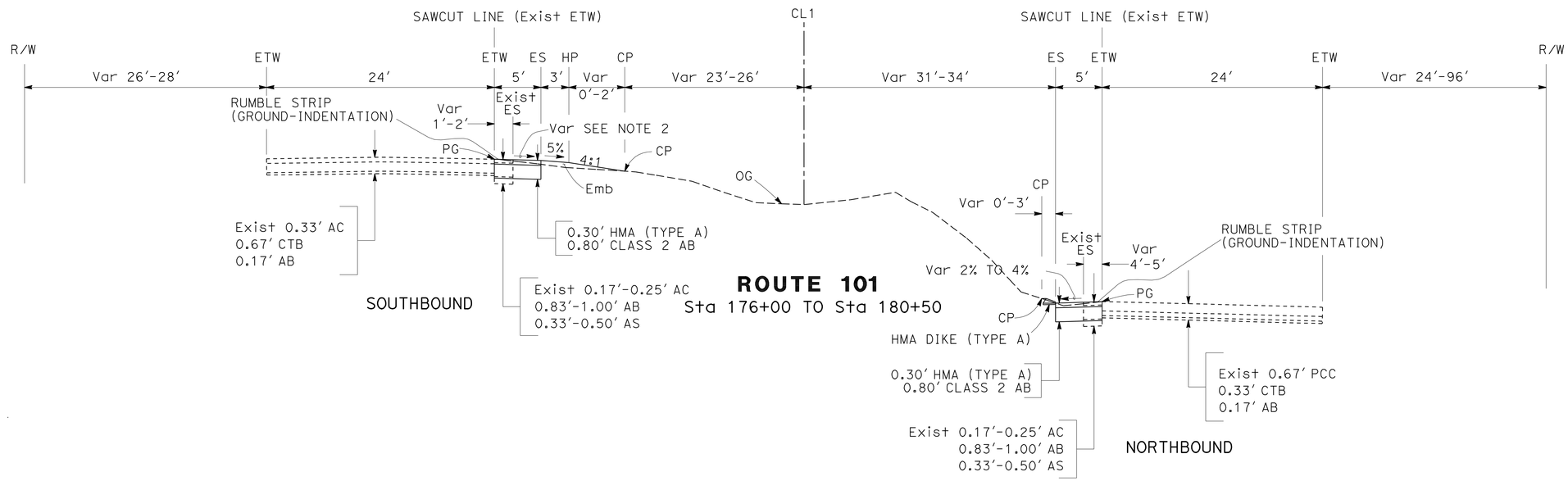

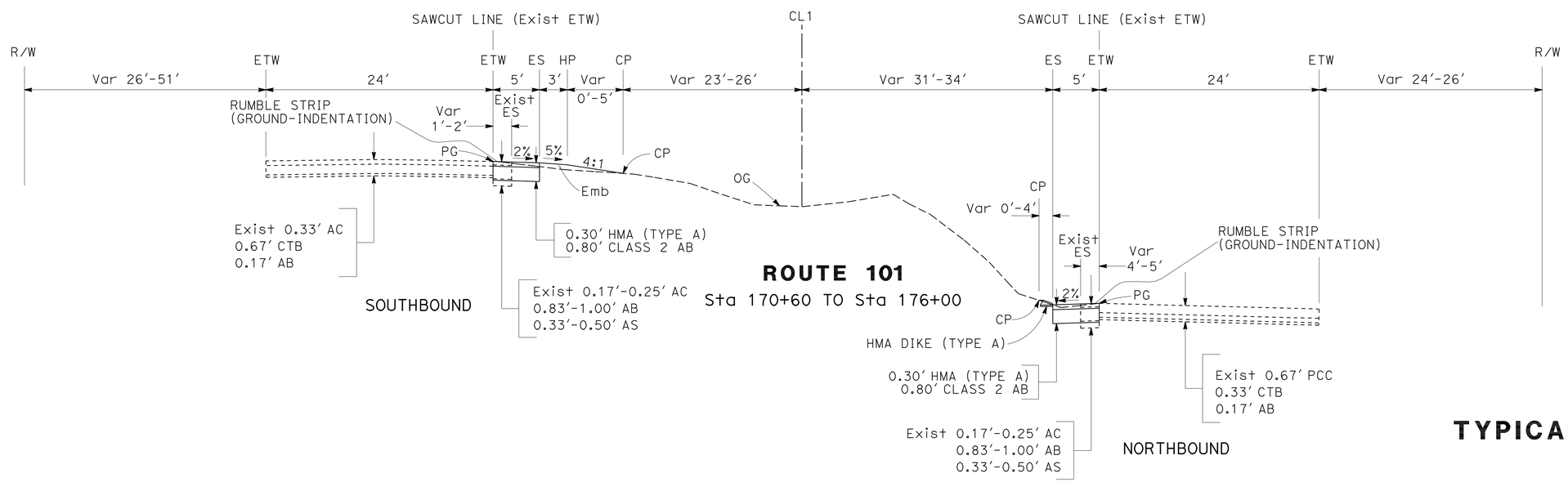

TYPICAL CROSS SECTIONS

NO SCALE **X-3**

REVISED BY	DATE REVISED
JOHNNY REYES	KHALID DAHIR
CALCULATED-DESIGNED BY	CHECKED BY
FUNCTIONAL SUPERVISOR	SCOTT SHAVER

STATE OF CALIFORNIA - DEPARTMENT OF TRANSPORTATION
Caltrans
DESIGN

LAST REVISION 07-14-10
DATE PLOTTED => 22-SEP-2010
TIME PLOTTED => 06:25

Dist	COUNTY	ROUTE	POST MILES TOTAL PROJECT	SHEET No.	TOTAL SHEETS
05	Mon	101	R10.8/R12.6	5	38

REGISTERED CIVIL ENGINEER 07-15-10 DATE

9-20-10
PLANS APPROVAL DATE

REGISTERED PROFESSIONAL ENGINEER KHALID A. DAHIR No. 70240 Exp. 9/30/10 CIVIL STATE OF CALIFORNIA

THE STATE OF CALIFORNIA OR ITS OFFICERS OR AGENTS SHALL NOT BE RESPONSIBLE FOR THE ACCURACY OR COMPLETENESS OF SCANNED COPIES OF THIS PLAN SHEET.

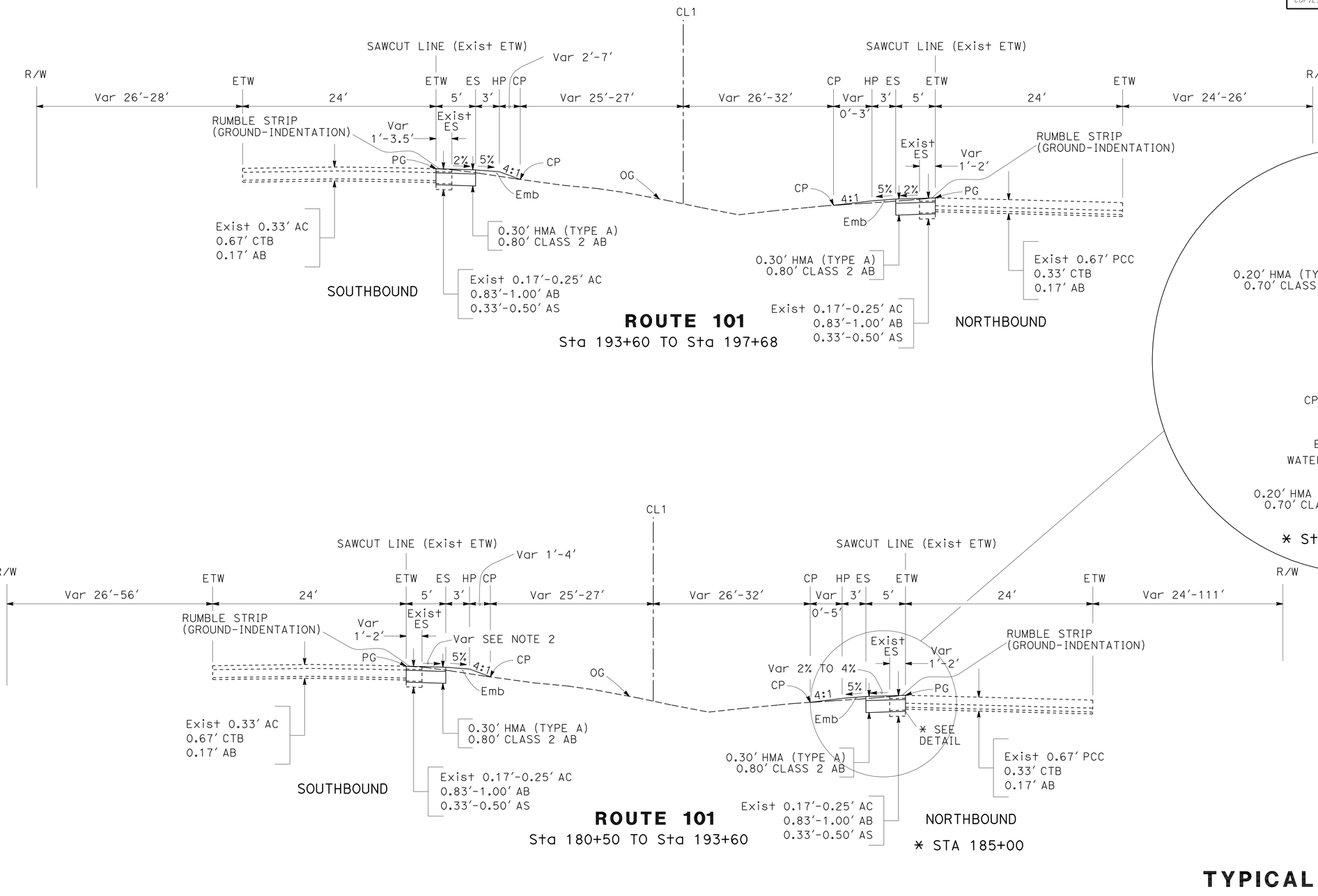

TYPICAL CROSS SECTIONS

NO SCALE

X-4

STATE OF CALIFORNIA - DEPARTMENT OF TRANSPORTATION
Caltrans
DESIGN
FUNCTIONAL SUPERVISOR: SCOTT SHAVER
CALCULATED-DESIGNED BY: JOHNNY REYES
CHECKED BY: KHALID DAHIR
REVISED BY
DATE REVISED

LAST REVISION 07-14-10 | DATE PLOTTED => 21-SEP-2010 | TIME PLOTTED => 13:51

Dist	COUNTY	ROUTE	POST MILES TOTAL PROJECT	SHEET No.	TOTAL SHEETS
05	Mon	101	R10.8/R12.6	6	38

REGISTERED CIVIL ENGINEER DATE 07-15-10

9-20-10
PLANS APPROVAL DATE

REGISTERED PROFESSIONAL ENGINEER KHALID A. DAHIR No. 70240 Exp. 9/30/10 CIVIL STATE OF CALIFORNIA

THE STATE OF CALIFORNIA OR ITS OFFICERS OR AGENTS SHALL NOT BE RESPONSIBLE FOR THE ACCURACY OR COMPLETENESS OF SCANNED COPIES OF THIS PLAN SHEET.

NOTE:

FOR ACCURATE RIGHT OF WAY AND ACCESS DATA, CONTACT RIGHT OF WAY ENGINEERING AT THE DISTRICT OFFICE.

LEGEND

REMOVE TREE

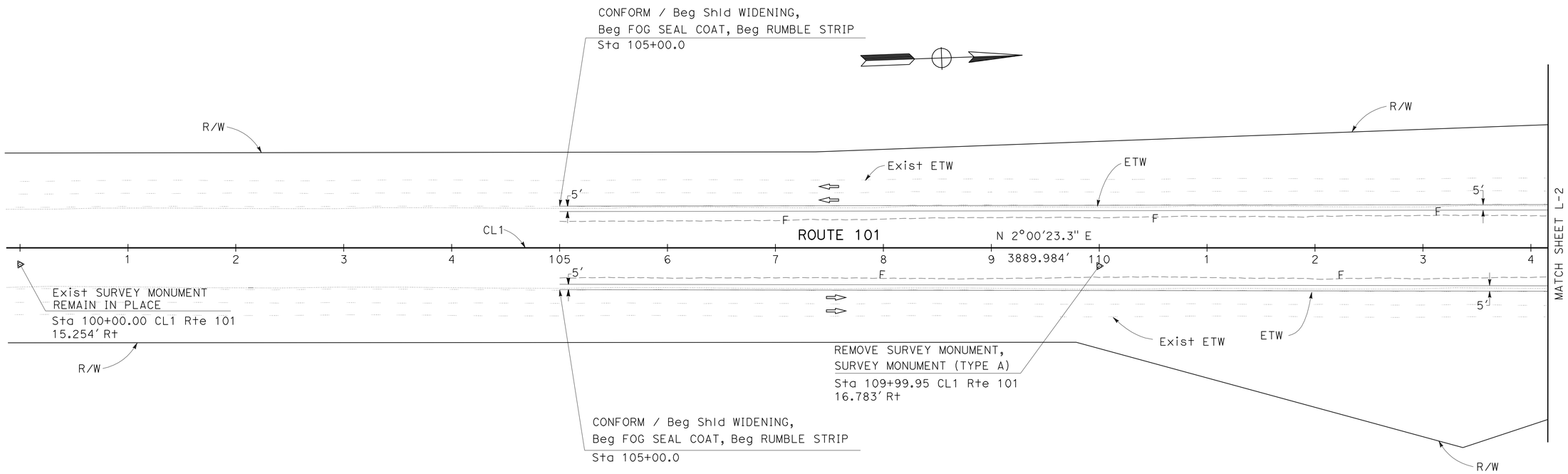

LAYOUT

SCALE: 1" = 50'

L-1

REVISED BY	DATE REVISED

CALCULATED-DESIGNED BY	CHECKED BY
JOHNNY REYES	KHALID DAHIR

FUNCTIONAL SUPERVISOR: SCOTT SHAVER

STATE OF CALIFORNIA - DEPARTMENT OF TRANSPORTATION

Caltrans

DESIGN

LAST REVISION 07-14-10 | DATE PLOTTED => 21-SEP-2010 | TIME PLOTTED => 14:49

Dist	COUNTY	ROUTE	POST MILES TOTAL PROJECT	SHEET No.	TOTAL SHEETS
05	Mon	101	R10.8/R12.6	7	38

REGISTERED CIVIL ENGINEER 07-15-10 DATE

9-20-10
PLANS APPROVAL DATE

REGISTERED PROFESSIONAL ENGINEER KHALID A. DAHIR No. 70240 Exp. 9/30/10 CIVIL STATE OF CALIFORNIA

THE STATE OF CALIFORNIA OR ITS OFFICERS OR AGENTS SHALL NOT BE RESPONSIBLE FOR THE ACCURACY OR COMPLETENESS OF SCANNED COPIES OF THIS PLAN SHEET.

NOTE:

FOR ACCURATE RIGHT OF WAY AND ACCESS DATA, CONTACT RIGHT OF WAY ENGINEERING AT THE DISTRICT OFFICE.

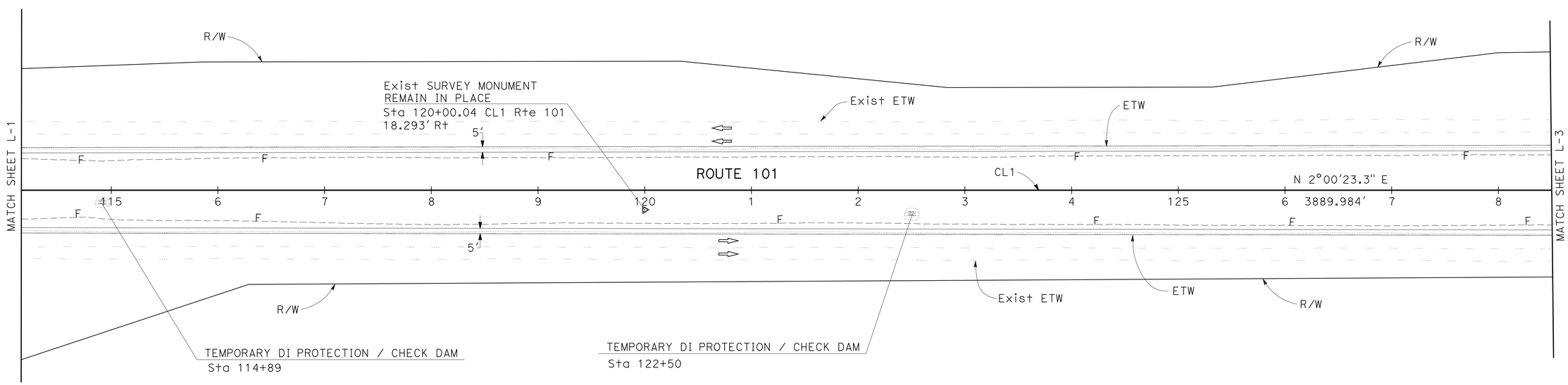

LAYOUT

SCALE: 1" = 50' **L-2**

STATE OF CALIFORNIA - DEPARTMENT OF TRANSPORTATION
Caltrans
DESIGN

FUNCTIONAL SUPERVISOR: SCOTT SHAVER
CALCULATED-DESIGNED BY: JOHNNY REYES
CHECKED BY: KHALID DAHIR
REVISED BY
DATE REVISED

LAST REVISION 07-14-10
DATE PLOTTED => 21-SEP-2010
TIME PLOTTED => 14:49

Dist	COUNTY	ROUTE	POST MILES TOTAL PROJECT	SHEET No.	TOTAL SHEETS
05	Mon	101	R10.8/R12.6	8	38

Khalid A Dahir 07-15-10
REGISTERED CIVIL ENGINEER DATE

9-20-10
PLANS APPROVAL DATE

REGISTERED PROFESSIONAL ENGINEER
KHALID A. DAHIR
No. 70240
Exp. 9/30/10
CIVIL
STATE OF CALIFORNIA

THE STATE OF CALIFORNIA OR ITS OFFICERS OR AGENTS SHALL NOT BE RESPONSIBLE FOR THE ACCURACY OR COMPLETENESS OF SCANNED COPIES OF THIS PLAN SHEET.

NOTE:

FOR ACCURATE RIGHT OF WAY AND ACCESS DATA, CONTACT RIGHT OF WAY ENGINEERING AT THE DISTRICT OFFICE.

CURVE DATA

No.	R	Δ	T	L
1	6900.00′	13°51′59″	839.05′	1669.90′

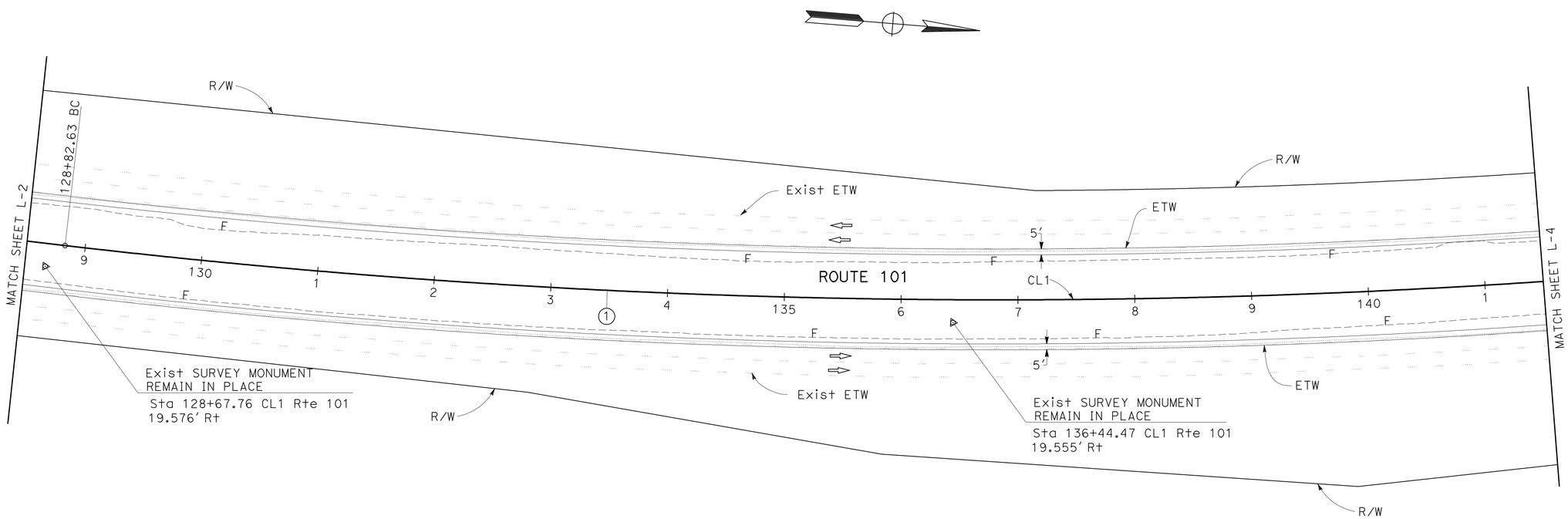

LAYOUT

SCALE: 1″ = 50′ **L-3**

STATE OF CALIFORNIA - DEPARTMENT OF TRANSPORTATION
Caltrans
DESIGN

FUNCTIONAL SUPERVISOR: SCOTT SHAVER
CALCULATED-DESIGNED BY: JOHNNY REYES
CHECKED BY: KHALID DAHIR
REVISED BY
DATE REVISED

LAST REVISION 07-14-10
DATE PLOTTED => 21-SEP-2010
TIME PLOTTED => 14:49

Dist	COUNTY	ROUTE	POST MILES TOTAL PROJECT	SHEET No.	TOTAL SHEETS
05	Mon	101	R10.8/R12.6	9	38

REGISTERED CIVIL ENGINEER DATE 07-15-10

9-20-10
PLANS APPROVAL DATE

REGISTERED PROFESSIONAL ENGINEER KHALID A. DAHIR No. 70240 Exp. 9/30/10 CIVIL STATE OF CALIFORNIA

THE STATE OF CALIFORNIA OR ITS OFFICERS OR AGENTS SHALL NOT BE RESPONSIBLE FOR THE ACCURACY OR COMPLETENESS OF SCANNED COPIES OF THIS PLAN SHEET.

NOTE:

FOR ACCURATE RIGHT OF WAY AND ACCESS DATA, CONTACT RIGHT OF WAY ENGINEERING AT THE DISTRICT OFFICE.

CURVE DATA

No.	R	Δ	T	L
1	6900.00′	13°51′59″	839.05′	1669.90′
2	4950.00′	17°45′43″	773.47′	1534.53′

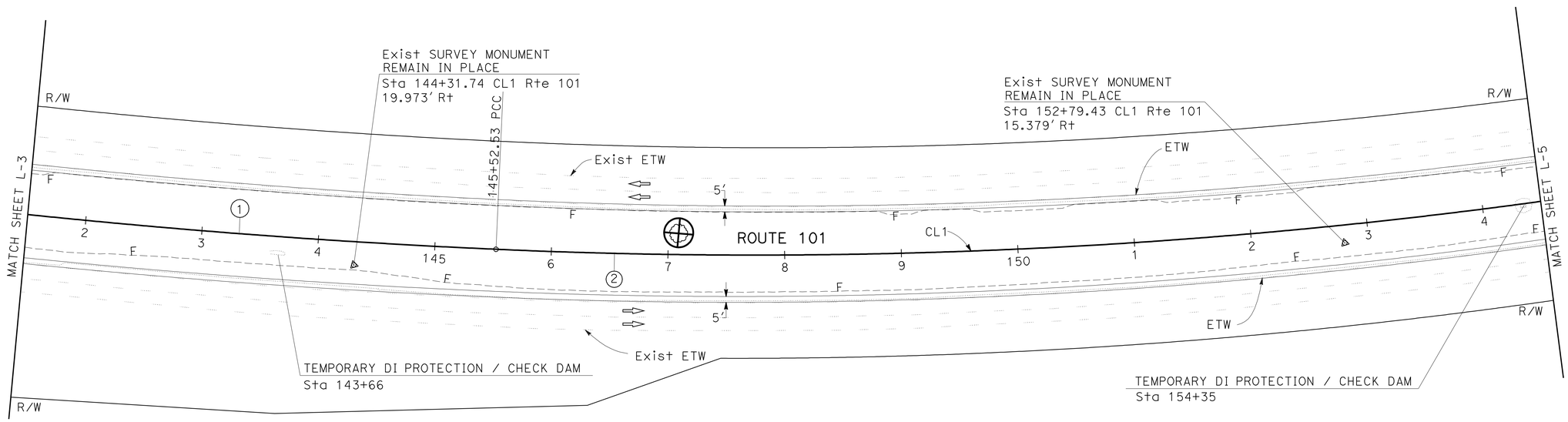

LAYOUT
SCALE: 1" = 50′

L-4

STATE OF CALIFORNIA - DEPARTMENT OF TRANSPORTATION
Caltrans
DESIGN

FUNCTIONAL SUPERVISOR: SCOTT SHAVER
CALCULATED-DESIGNED BY: JOHNNY REYES
CHECKED BY: KHALID DAHIR
REVISED BY
DATE REVISED

LAST REVISION 07-14-10 | DATE PLOTTED => 21-SEP-2010 | TIME PLOTTED => 15:06

Dist	COUNTY	ROUTE	POST MILES TOTAL PROJECT	SHEET No.	TOTAL SHEETS
05	Mon	101	R10.8/R12.6	10	38

Khalid A Dahir 07-15-10
REGISTERED CIVIL ENGINEER DATE

9-20-10
PLANS APPROVAL DATE

REGISTERED PROFESSIONAL ENGINEER
KHALID A. DAHIR
No. 70240
Exp. 9/30/10
CIVIL
STATE OF CALIFORNIA

THE STATE OF CALIFORNIA OR ITS OFFICERS OR AGENTS SHALL NOT BE RESPONSIBLE FOR THE ACCURACY OR COMPLETENESS OF SCANNED COPIES OF THIS PLAN SHEET.

NOTE:

FOR ACCURATE RIGHT OF WAY AND ACCESS DATA, CONTACT RIGHT OF WAY ENGINEERING AT THE DISTRICT OFFICE.

CURVE DATA

No.	R	Δ	T	L
2	4950.00′	17°45′43"	773.47′	1534.53′

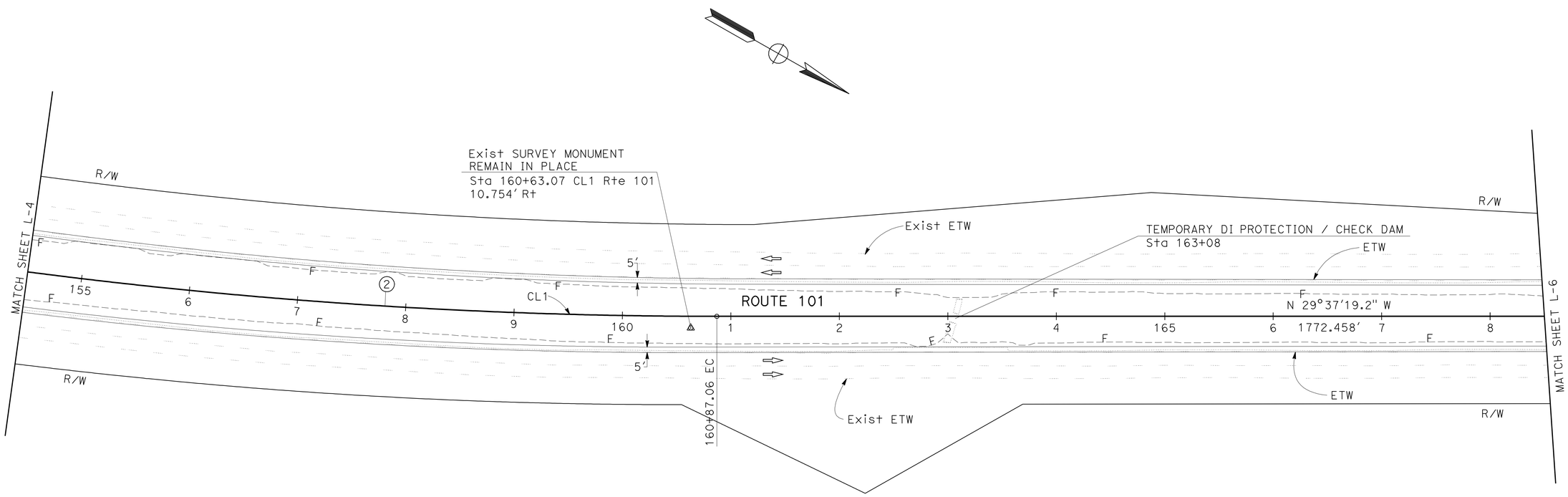

LAYOUT

SCALE: 1" = 50′ **L-5**

STATE OF CALIFORNIA - DEPARTMENT OF TRANSPORTATION
Caltrans
DESIGN

FUNCTIONAL SUPERVISOR: SCOTT SHAVER
JOHNNY REYES
KHALID DAHIR
CALCULATED-DESIGNED BY
CHECKED BY
REVISED BY
DATE REVISED

LAST REVISION 07-14-10
DATE PLOTTED => 21-SEP-2010
TIME PLOTTED => 17:28

BORDER LAST REVISED 7/2/2010
USERNAME => trlim
DGN FILE => 0500000377ea005.dgn
RELATIVE BORDER SCALE IS IN INCHES 0 1 2 3
UNIT 1464
PROJECT NUMBER & PHASE 05000003771

Dist	COUNTY	ROUTE	POST MILES TOTAL PROJECT	SHEET No.	TOTAL SHEETS
05	Mon	101	R10.8/R12.6	11	38

Khalid A Dahir 07-15-10
REGISTERED CIVIL ENGINEER DATE

9-20-10
PLANS APPROVAL DATE

REGISTERED PROFESSIONAL ENGINEER KHALID A. DAHIR No. 70240 Exp. 9/30/10 CIVIL STATE OF CALIFORNIA

THE STATE OF CALIFORNIA OR ITS OFFICERS OR AGENTS SHALL NOT BE RESPONSIBLE FOR THE ACCURACY OR COMPLETENESS OF SCANNED COPIES OF THIS PLAN SHEET.

NOTE:

FOR ACCURATE RIGHT OF WAY AND ACCESS DATA, CONTACT RIGHT OF WAY ENGINEERING AT THE DISTRICT OFFICE.

CURVE DATA

No.	R	Δ	T	L
3	3120.00′	23°13′48″	641.30′	1264.97′

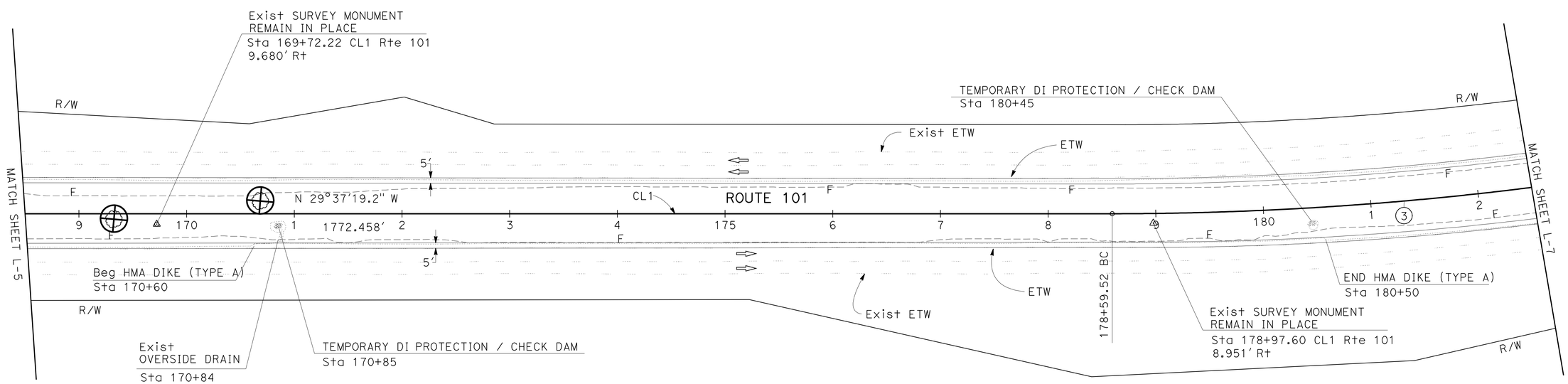

LAYOUT

SCALE: 1″ = 50′ **L-6**

STATE OF CALIFORNIA - DEPARTMENT OF TRANSPORTATION
Caltrans® DESIGN

FUNCTIONAL SUPERVISOR: SCOTT SHAVER
CALCULATED-DESIGNED BY: JOHNNY REYES
CHECKED BY: KHALID DAHIR
REVISED BY
DATE REVISED

LAST REVISION 07-14-10
DATE PLOTTED => 21-SEP-2010
TIME PLOTTED => 17:28

Dist	COUNTY	ROUTE	POST MILES TOTAL PROJECT	SHEET No.	TOTAL SHEETS
05	Mon	101	R10.8/R12.6	12	38

Khalid A Dahir 07-15-10
REGISTERED CIVIL ENGINEER DATE

9-20-10
PLANS APPROVAL DATE

REGISTERED PROFESSIONAL ENGINEER
KHALID A. DAHIR
No. 70240
Exp. 9/30/10
CIVIL
STATE OF CALIFORNIA

THE STATE OF CALIFORNIA OR ITS OFFICERS OR AGENTS SHALL NOT BE RESPONSIBLE FOR THE ACCURACY OR COMPLETENESS OF SCANNED COPIES OF THIS PLAN SHEET.

NOTE:

FOR ACCURATE RIGHT OF WAY AND ACCESS DATA, CONTACT RIGHT OF WAY ENGINEERING AT THE DISTRICT OFFICE.

CURVE DATA

No.	R	Δ	T	L
3	3120.00′	23°13′48"	641.30′	1264.97′

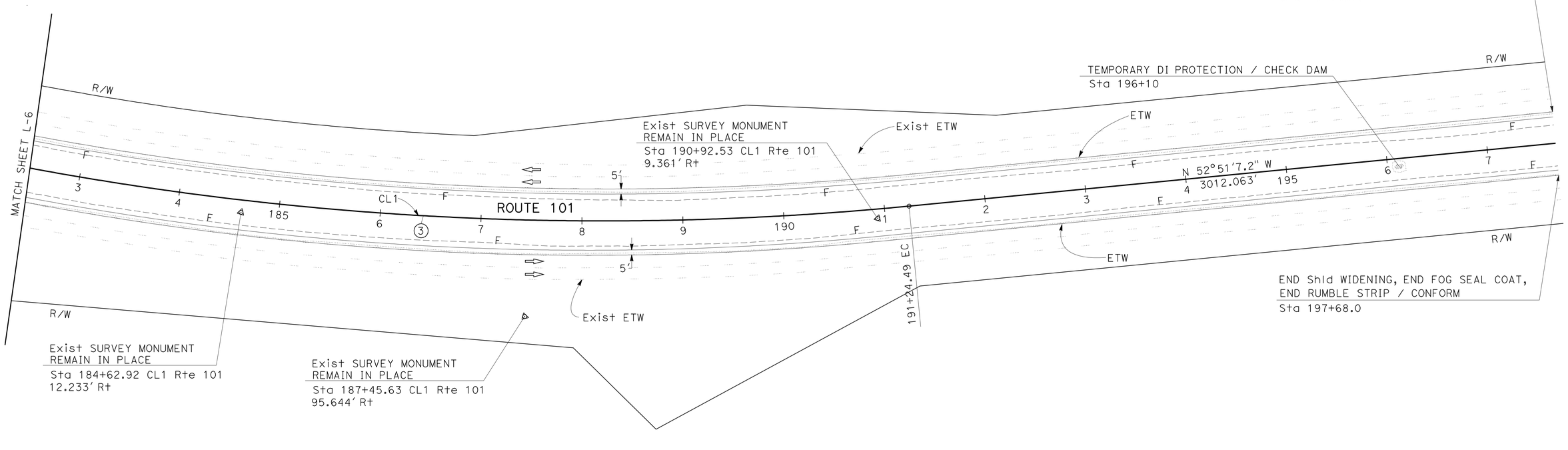

LAYOUT

SCALE: 1" = 50′ **L-7**

STATE OF CALIFORNIA - DEPARTMENT OF TRANSPORTATION
Caltrans
DESIGN

FUNCTIONAL SUPERVISOR: SCOTT SHAVER
CALCULATED-DESIGNED BY: JOHNNY REYES
CHECKED BY: KHALID DAHIR
REVISED BY
DATE REVISED

LAST REVISION 07-14-10
DATE PLOTTED => 21-SEP-2010
TIME PLOTTED => 17:28

Dist	COUNTY	ROUTE	POST MILES TOTAL PROJECT	SHEET No.	TOTAL SHEETS
05	Mon	101	R10.8/R12.6	13	38

Khalid A Dahir 07-15-10
REGISTERED CIVIL ENGINEER DATE

9-20-10
PLANS APPROVAL DATE

REGISTERED PROFESSIONAL ENGINEER KHALID A. DAHIR No. 70240 Exp. 9/30/10 CIVIL STATE OF CALIFORNIA

THE STATE OF CALIFORNIA OR ITS OFFICERS OR AGENTS SHALL NOT BE RESPONSIBLE FOR THE ACCURACY OR COMPLETENESS OF SCANNED COPIES OF THIS PLAN SHEET.

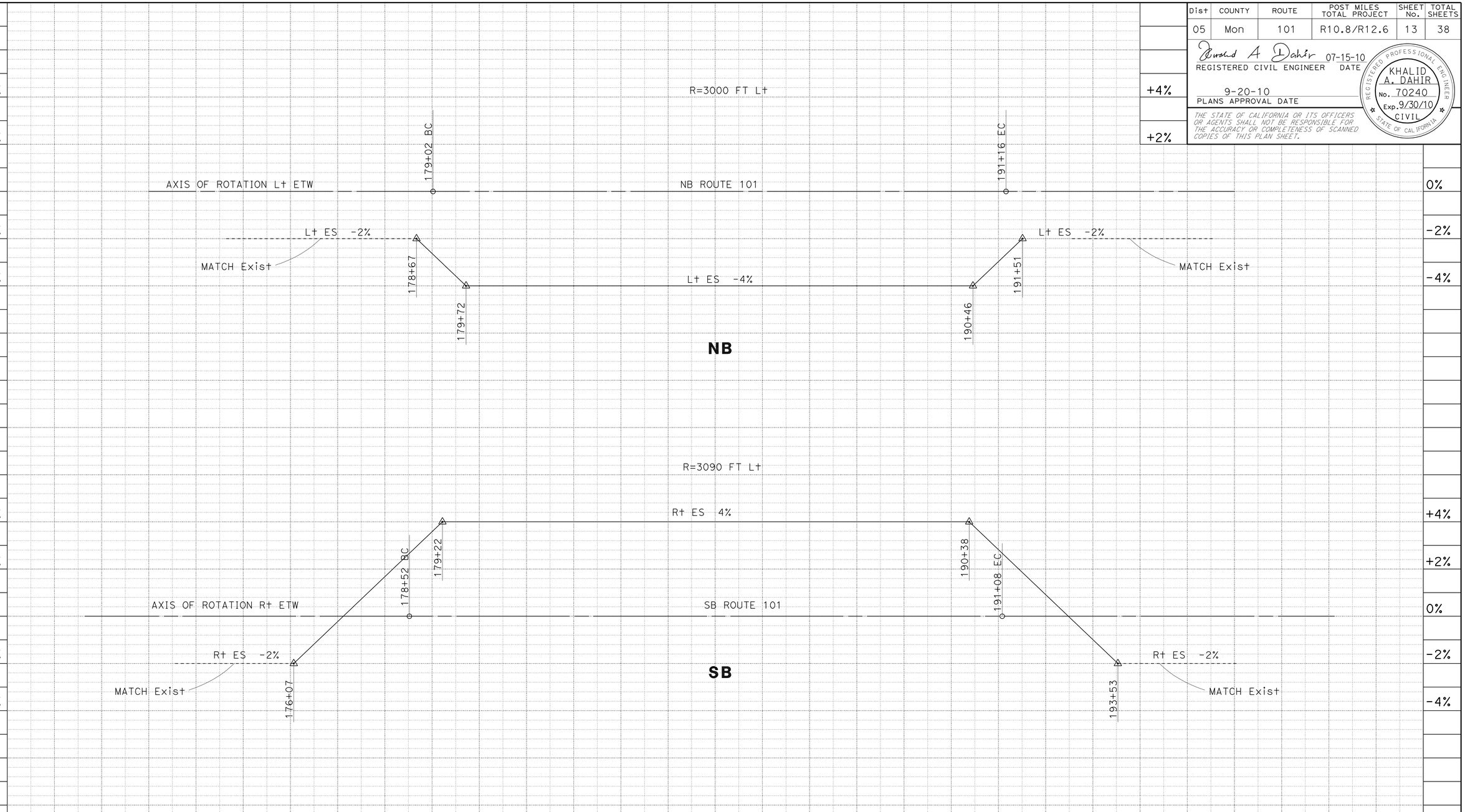

SUPERELEVATION DIAGRAM

SE-1

SCALE: 1" = 100'

STATE OF CALIFORNIA - DEPARTMENT OF TRANSPORTATION
Caltrans®
DESIGN

FUNCTIONAL SUPERVISOR: SCOTT SHAVER
CALCULATED-DESIGNED BY: JOHNNY REYES
CHECKED BY: KHALID DAHIR
REVISED BY
DATE REVISED

LAST REVISION DATE PLOTTED => 21-SEP-2010
07-14-10 TIME PLOTTED => 17:28

Dist	COUNTY	ROUTE	POST MILES TOTAL PROJECT	SHEET No.	TOTAL SHEETS
05	Mon	101	R10.8/R12.6	14	38

REGISTERED CIVIL ENGINEER 07-15-10 DATE

9-20-10
PLANS APPROVAL DATE

REGISTERED PROFESSIONAL ENGINEER KHALID A. DAHIR No. 70240 Exp. 9/30/10 CIVIL STATE OF CALIFORNIA

THE STATE OF CALIFORNIA OR ITS OFFICERS OR AGENTS SHALL NOT BE RESPONSIBLE FOR THE ACCURACY OR COMPLETENESS OF SCANNED COPIES OF THIS PLAN SHEET.

NOTE:

FOR ACCURATE RIGHT OF WAY AND ACCESS DATA, CONTACT RIGHT OF WAY ENGINEERING AT THE DISTRICT OFFICE.

LEGEND:

(#) Proposed location for identifying the positive location of the utilities

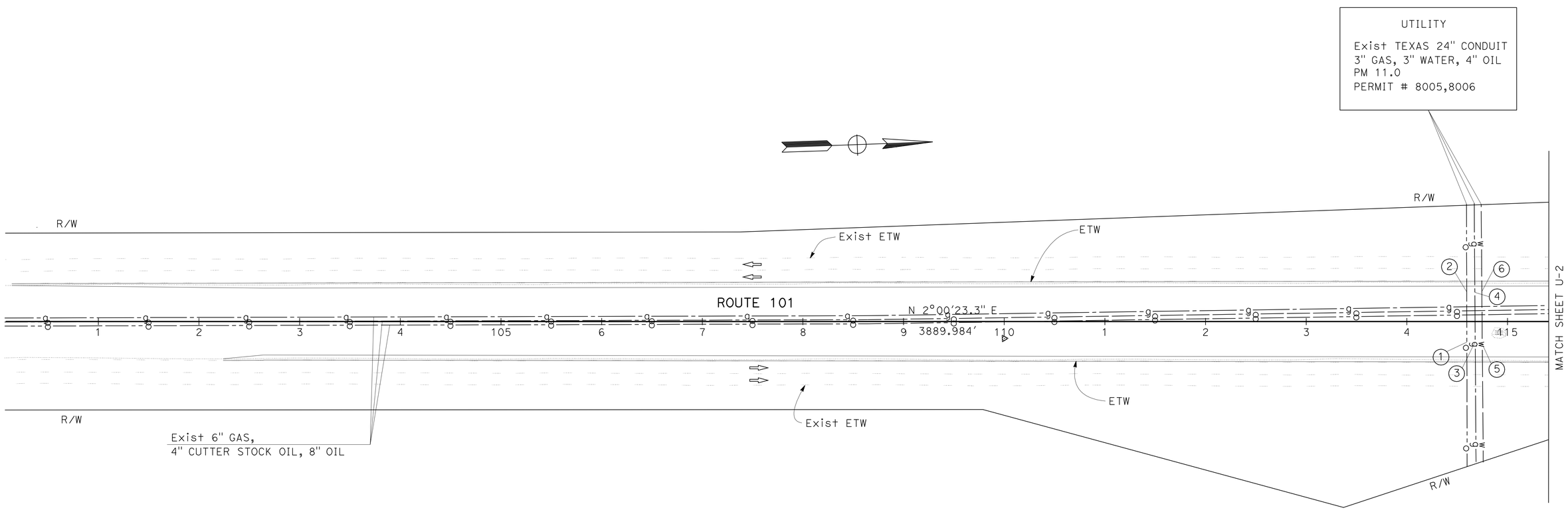

THIS PLAN ACCURATE FOR UTILITY INFORMATION ONLY.

UTILITY PLAN

SCALE: 1" = 50'

U-1

STATE OF CALIFORNIA - DEPARTMENT OF TRANSPORTATION

Caltrans DESIGN

FUNCTIONAL SUPERVISOR: SCOTT SHAVER

CALCULATED-DESIGNED BY: JOHNNY REYES

CHECKED BY: KHALID DAHIR

REVISED BY

DATE REVISED

LAST REVISION 07-14-10

DATE PLOTTED => 22-SEP-2010

TIME PLOTTED => 06:31

Dist	COUNTY	ROUTE	POST MILES TOTAL PROJECT	SHEET No.	TOTAL SHEETS
05	Mon	101	R10.8/R12.6	15	38

Khalid A Dahir 07-15-10
REGISTERED CIVIL ENGINEER DATE

9-20-10
PLANS APPROVAL DATE

REGISTERED PROFESSIONAL ENGINEER
KHALID A. DAHIR
No. 70240
Exp. 9/30/10
CIVIL
STATE OF CALIFORNIA

THE STATE OF CALIFORNIA OR ITS OFFICERS OR AGENTS SHALL NOT BE RESPONSIBLE FOR THE ACCURACY OR COMPLETENESS OF SCANNED COPIES OF THIS PLAN SHEET.

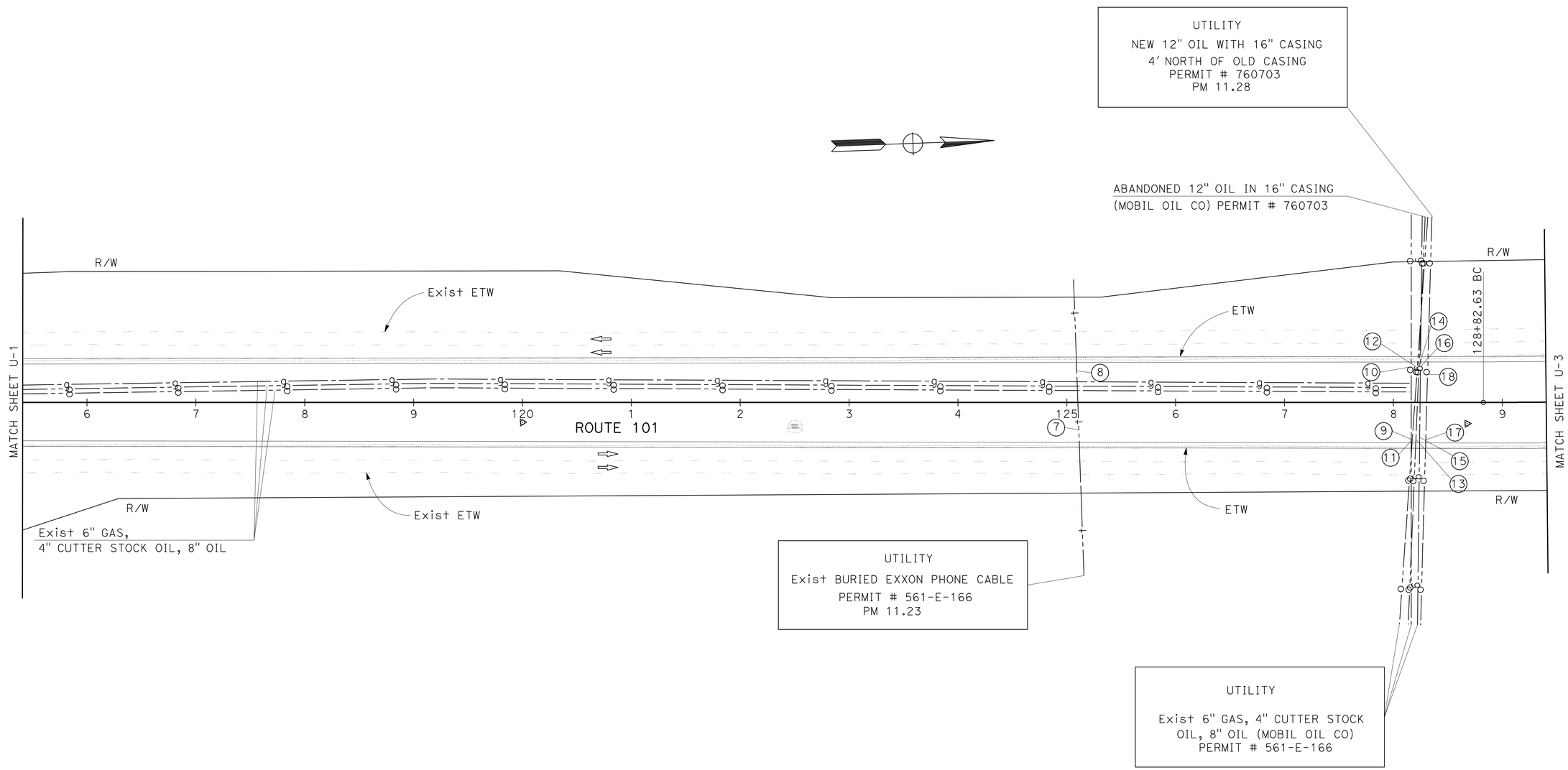

UTILITY PLAN

SCALE: 1" = 50'

U-2

THIS PLAN ACCURATE FOR UTILITY INFORMATION ONLY.

STATE OF CALIFORNIA - DEPARTMENT OF TRANSPORTATION
Caltrans®
DESIGN

FUNCTIONAL SUPERVISOR: SCOTT SHAVER
CALCULATED-DESIGNED BY: JOHNNY REYES
CHECKED BY: KHALID DAHIR
REVISED BY
DATE REVISED

LAST REVISION 07-14-10
DATE PLOTTED => 21-SEP-2010
TIME PLOTTED => 17:29

Dist	COUNTY	ROUTE	POST MILES TOTAL PROJECT	SHEET No.	TOTAL SHEETS
05	Mon	101	R10.8/R12.6	16	38

REGISTERED CIVIL ENGINEER 07-15-10 DATE

9-20-10
PLANS APPROVAL DATE

REGISTERED PROFESSIONAL ENGINEER KHALID A. DAHIR No. 70240 Exp. 9/30/10 CIVIL STATE OF CALIFORNIA

THE STATE OF CALIFORNIA OR ITS OFFICERS OR AGENTS SHALL NOT BE RESPONSIBLE FOR THE ACCURACY OR COMPLETENESS OF SCANNED COPIES OF THIS PLAN SHEET.

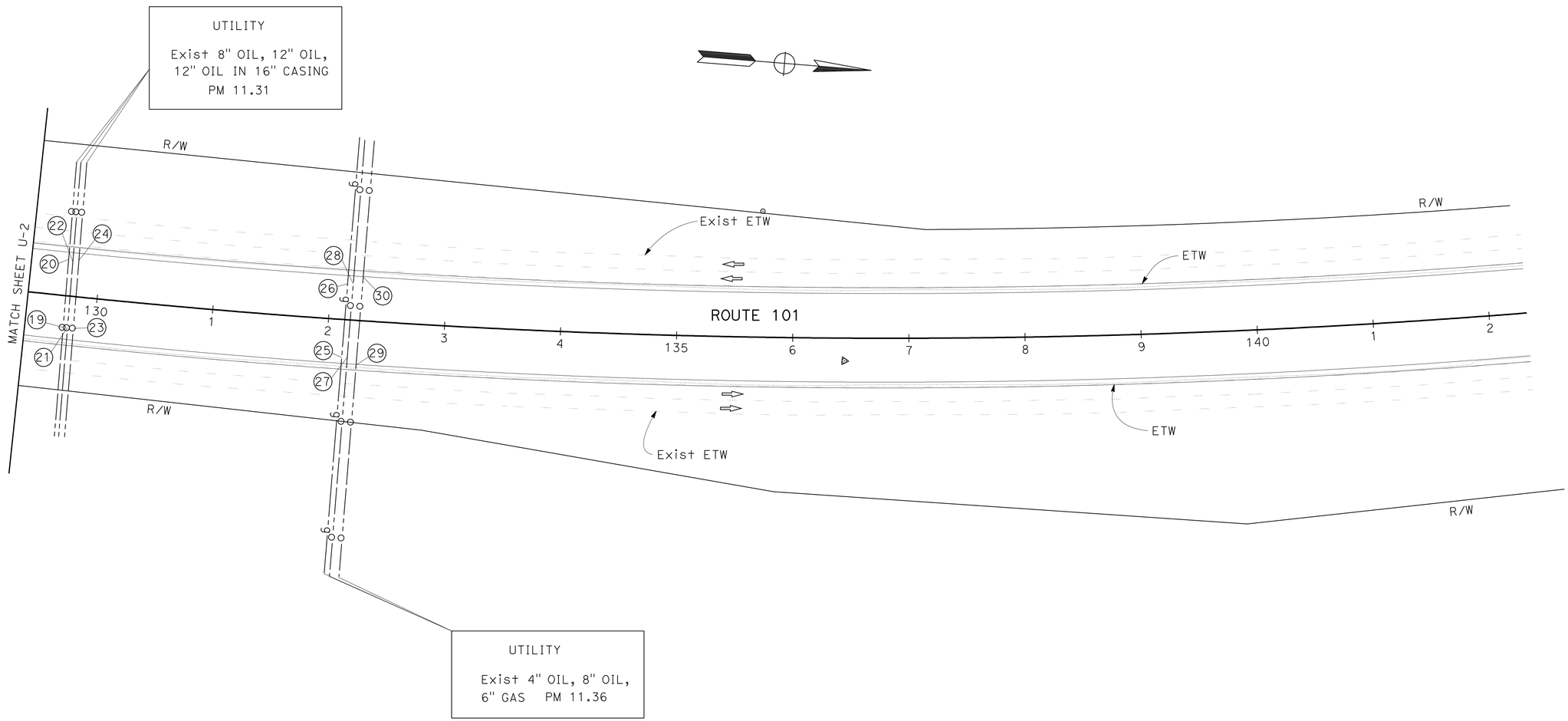

UTILITY PLAN

SCALE: 1" = 50'

U-3

THIS PLAN ACCURATE FOR UTILITY INFORMATION ONLY.

STATE OF CALIFORNIA - DEPARTMENT OF TRANSPORTATION
Caltrans
DESIGN

FUNCTIONAL SUPERVISOR: SCOTT SHAVER
CALCULATED-DESIGNED BY: JOHNNY REYES
CHECKED BY: KHALID DAHIR
REVISED BY
DATE REVISED

LAST REVISION 07-14-10
DATE PLOTTED => 22-SEP-2010
TIME PLOTTED => 06:36

Dist	COUNTY	ROUTE	POST MILES TOTAL PROJECT	SHEET No.	TOTAL SHEETS
05	Mon	101	R10.8/R12.6	17	38

Khalid A Dahir 07-15-10
REGISTERED CIVIL ENGINEER DATE

9-20-10
PLANS APPROVAL DATE

REGISTERED PROFESSIONAL ENGINEER
KHALID A. DAHIR
No. 70240
Exp. 9/30/10
CIVIL
STATE OF CALIFORNIA

THE STATE OF CALIFORNIA OR ITS OFFICERS OR AGENTS SHALL NOT BE RESPONSIBLE FOR THE ACCURACY OR COMPLETENESS OF SCANNED COPIES OF THIS PLAN SHEET.

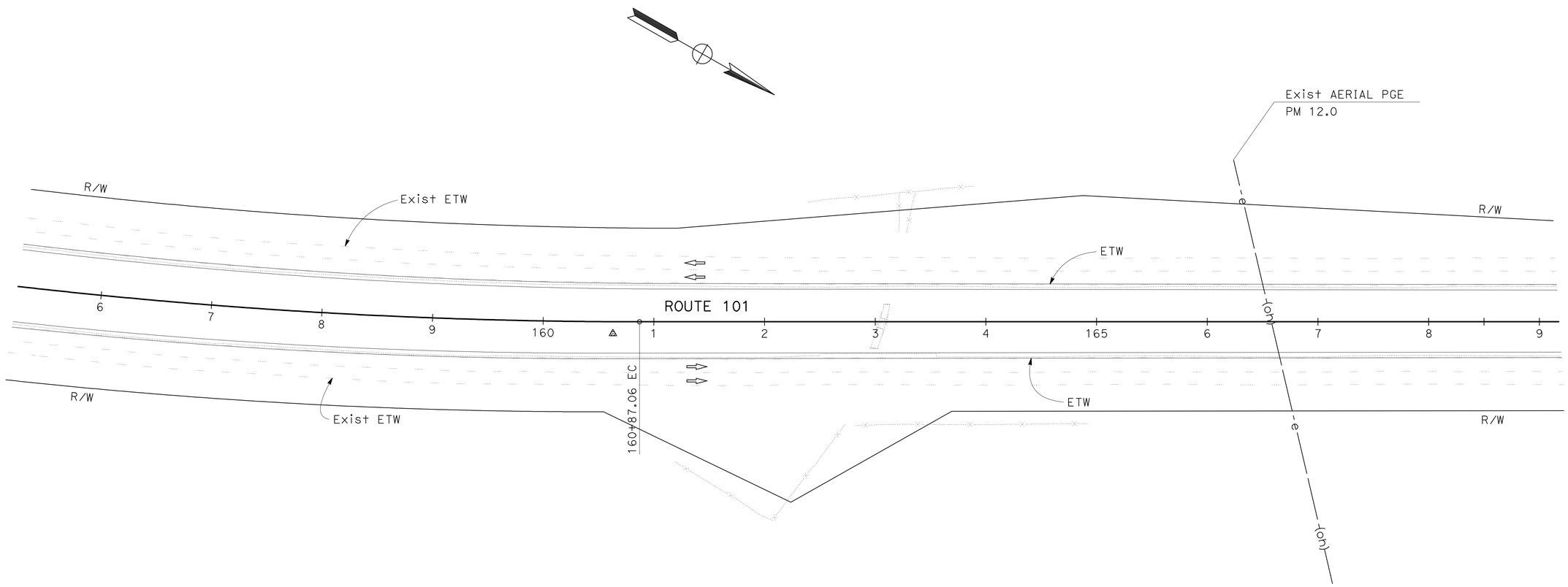

UTILITY PLAN

SCALE: 1" = 50'

U-4

THIS PLAN ACCURATE FOR UTILITY INFORMATION ONLY.

STATE OF CALIFORNIA - DEPARTMENT OF TRANSPORTATION
Caltrans
DESIGN

FUNCTIONAL SUPERVISOR: SCOTT SHAVER

CALCULATED-DESIGNED BY: JOHNNY REYES
CHECKED BY: KHALID DAHIR

REVISED BY
DATE REVISED

LAST REVISION 07-14-10
DATE PLOTTED => 21-SEP-2010
TIME PLOTTED => 17:29

Dist	COUNTY	ROUTE	POST MILES TOTAL PROJECT	SHEET No.	TOTAL SHEETS
05	Mon	101	R10.8/R12.6	18	38

Khalid A Dahir 07-15-10
REGISTERED CIVIL ENGINEER DATE

9-20-10
PLANS APPROVAL DATE

REGISTERED PROFESSIONAL ENGINEER
KHALID A. DAHIR
No. 70240
Exp. 9/30/10
CIVIL
STATE OF CALIFORNIA

THE STATE OF CALIFORNIA OR ITS OFFICERS OR AGENTS SHALL NOT BE RESPONSIBLE FOR THE ACCURACY OR COMPLETENESS OF SCANNED COPIES OF THIS PLAN SHEET.

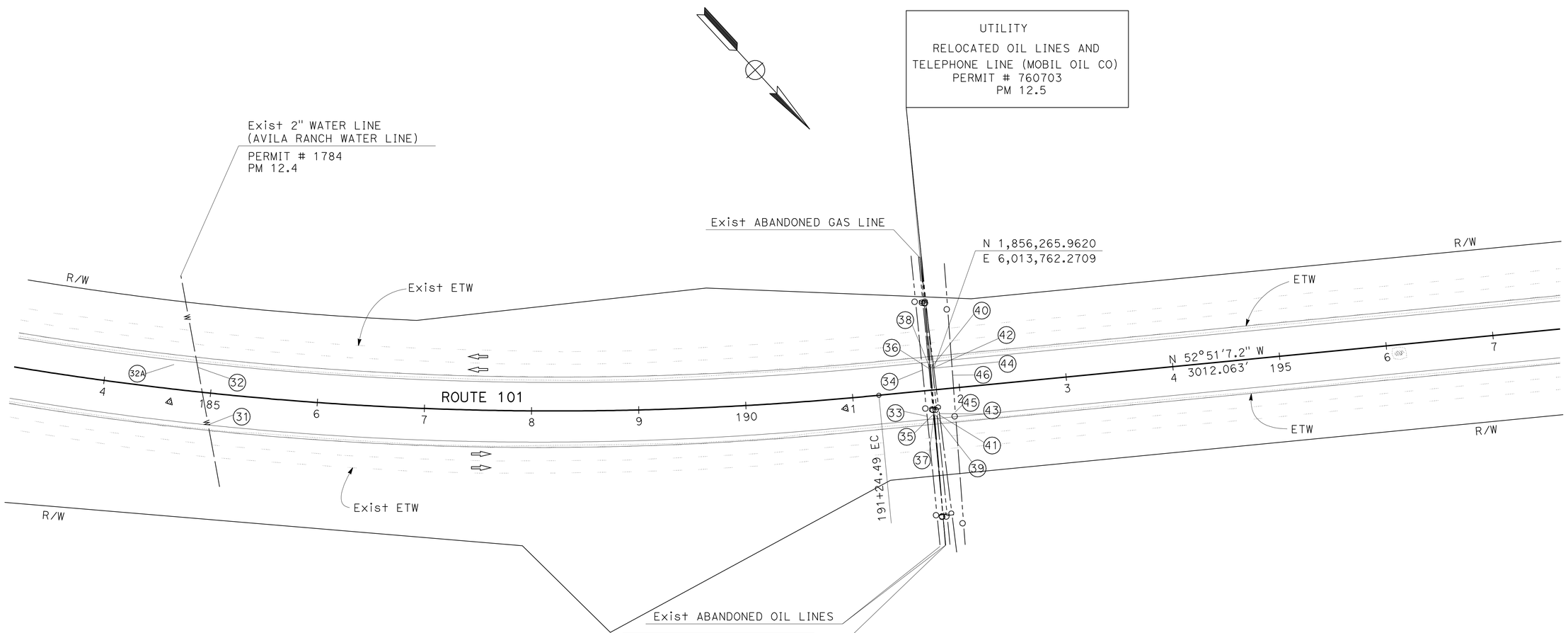

THIS PLAN ACCURATE FOR UTILITY INFORMATION ONLY.

UTILITY PLAN

SCALE: 1" = 50'

U-5

STATE OF CALIFORNIA - DEPARTMENT OF TRANSPORTATION
Caltrans®
DESIGN

FUNCTIONAL SUPERVISOR: SCOTT SHAVER
CALCULATED-DESIGNED BY: JOHNNY REYES
CHECKED BY: KHALID DAHIR
REVISED BY
DATE REVISED

LAST REVISION 07-14-10
DATE PLOTTED => 21-SEP-2010
TIME PLOTTED => 17:29

Dist	COUNTY	ROUTE	POST MILES TOTAL PROJECT	SHEET No.	TOTAL SHEETS
05	Mon	101	R10.8/R12.6	19	38

REGISTERED CIVIL ENGINEER DATE 07-15-10

PLANS APPROVAL DATE 9-20-10

REGISTERED PROFESSIONAL ENGINEER KHALID A. DAHIR No. 70240 Exp. 9/30/10 CIVIL STATE OF CALIFORNIA

THE STATE OF CALIFORNIA OR ITS OFFICERS OR AGENTS SHALL NOT BE RESPONSIBLE FOR THE ACCURACY OR COMPLETENESS OF SCANNED COPIES OF THIS PLAN SHEET.

LEGEND:

(#) SEE SHEET U-1

UTILITY INFORMATION

(#)	STATION	UTILITY	NORTHING	EASTING	ELEVATION OF UTILITY (FT)	OFFSET FROM CL1	REMARKS
1	114+59.97	OIL					UNABLE TO LOCATE (NOT POTHOLED)
2	114+59.81	OIL					UNABLE TO LOCATE (NOT POTHOLED)
3	114+68.51	GAS					UNABLE TO LOCATE (NOT POTHOLED)
4	114+67.46	GAS					UNABLE TO LOCATE (NOT POTHOLED)
5	114+74.54	WATER					UNABLE TO LOCATE (NOT POTHOLED)
6	114+74.75	WATER					UNABLE TO LOCATE (NOT POTHOLED)
7	125+09.14	Tel					UNABLE TO LOCATE (NOT POTHOLED)
8	125+11.57	Tel					UNABLE TO LOCATE (NOT POTHOLED)
9	128+16.36	OIL			2.42′ FROM OG		(POTHOLED)
10	128+16.36	OIL					DUG 3.75′ FROM OG (COULDN`T GET PAST LARGE ROCKS) (POTHOLED)
11	128+17.36	OIL			2.58′ FROM OG		(POTHOLED)
12	128+21.96	OIL					DUG 5′ FROM OG (COULDN`T GET PAST LARGE ROCKS) (POTHOLED)
13	128+20.69	OIL			2.46′ FROM OG		(POTHOLED)
14	128+23.46	OIL					DUG 5.0′ FROM OG (COULDN`T GET PAST LARGE ROCKS) (POTHOLED)
15	128+24.11	GAS			5.83′ FROM OG		(POTHOLED)
16	128+24.86	GAS					DUG 8′ FROM OG (NOTHING FOUND) (POTHOLED)
17	128+29.69	OIL			5.83′ FROM OG		(POTHOLED)
18	128+31.36	OIL					DUG 8′ FROM OG (NOTHING FOUND) (POTHOLED)
19	129+73.72	OIL					UNABLE TO LOCATE (NOT POTHOLED)
20	129+72.42	OIL					UNABLE TO LOCATE (NOT POTHOLED)
21	129+77.77	OIL					UNABLE TO LOCATE (NOT POTHOLED)
22	129+76.33	OIL					UNABLE TO LOCATE (NOT POTHOLED)
23	129+82.32	OIL					UNABLE TO LOCATE (NOT POTHOLED)
24	129+81.12	OIL					UNABLE TO LOCATE (NOT POTHOLED)
25	132+13.90	GAS					UNABLE TO LOCATE (NOT POTHOLED)
26	132+14.74	GAS					UNABLE TO LOCATE (NOT POTHOLED)
27	132+18.23	OIL					UNABLE TO LOCATE (NOT POTHOLED)
28	132+19.09	OIL					UNABLE TO LOCATE (NOT POTHOLED)
29	132+26.76	OIL					DUG 6.08′ FROM OG (NOTHING FOUND) (POTHOLED)
30	132+27.76	OIL					DUG 6.42′ FROM OG (NOTHING FOUND) (POTHOLED)
31	185+00.85	WATER	1,855,845.754	6,014,295.470	555.268	29.502′ R+	1.20′ FROM OG TO TOP OF 8" CORRUGATED PIPE (POTHOLED)
32	184+85.49	WATER	1,855,799.790	6,014,266.397		22.665′ L+	DUG 4.08′ FROM OG (NOTHING FOUND) (POTHOLED)
32A	184+63.03	WATER	1,855,782.832	6,014,280.865		22.836′ L+	DUG 6.58′ FROM OG (NOTHING FOUND) (POTHOLED)
33	191+67.39	OIL			4.67′ FROM OG		(POTHOLED)
34	191+67.25	OIL					DUG 9.75′ FROM OG (NOTHING FOUND) (POTHOLED)
35	191+73.42	OIL			3.33′ FROM OG		(POTHOLED)
36	191+73.55	OIL					DUG 4.5′ FROM OG (NOTHING FOUND) (POTHOLED)
37	191+90.42	Tel					UNABLE TO LOCATE (NOT POTHOLED)
38	191+90.86	Tel					UNABLE TO LOCATE (NOT POTHOLED)
39	191+74.42	OIL					DUG 6′ FROM OG (NOTHING FOUND) (POTHOLED)
40	191+74.97	OIL					DUG 9′ FROM OG (NOTHING FOUND) (POTHOLED)
41	191+76.82	OIL			3.75′ FROM OG		(POTHOLED)
42	191+76.72	OIL					DUG 10.25′ FROM OG (NOTHING FOUND) (POTHOLED)
43	191+79.07	GAS			3.50′ FROM OG		(POTHOLED)
44	191+77.89	GAS					DUG 6.25′ FROM OG (NOTHING FOUND) (POTHOLED)
45	192+10.04	OIL					UNABLE TO LOCATE (NOT POTHOLED)
46	192+09.79	OIL					UNABLE TO LOCATE (NOT POTHOLED)

THIS PLAN ACCURATE FOR UTILITY INFORMATION ONLY.

UTILITY PLAN

U-6

REVISED BY | DATE REVISED

JOHNNY REYES | KHALID DAHIR

CALCULATED-DESIGNED BY | CHECKED BY

FUNCTIONAL SUPERVISOR: SCOTT SHAVER

STATE OF CALIFORNIA - DEPARTMENT OF TRANSPORTATION

Caltrans DESIGN

LAST REVISION 07-14-10 | DATE PLOTTED => 21-SEP-2010 | TIME PLOTTED => 17:29

Dist	COUNTY	ROUTE	POST MILES TOTAL PROJECT	SHEET No.	TOTAL SHEETS
05	Mon	101	R10.8/R12.6	20	38

REGISTERED CIVIL ENGINEER 07-14-10 DATE

9-20-10
PLANS APPROVAL DATE

REGISTERED PROFESSIONAL ENGINEER FAWZI YAGHMOUR No. C-54750 Exp. 12-31-11 CIVIL STATE OF CALIFORNIA

THE STATE OF CALIFORNIA OR ITS OFFICERS OR AGENTS SHALL NOT BE RESPONSIBLE FOR THE ACCURACY OR COMPLETENESS OF SCANNED COPIES OF THIS PLAN SHEET.

CONSTRUCTION AREA SIGNS (STATIONARY MOUNTED)

SIGN No.	SIGN CODE	SIGN MESSAGE	PANEL SIZE	No. OF POST AND SIZE	No.OF SIGNS
A	W20-1	ROAD WORK AHEAD	48" x 48"	1-6" x 6"	2
B	W20-1	ROAD WORK AHEAD	36" x 36"	1-4" x 6"	1
C	G20-2	END ROAD WORK	36" x 18"	1-4" x 6"	5
D	C40A(CA)	DOUBLE FINE ZONE	48" x 48"	1-6" x 6"	2

NOTE: 1. SIGN LOCATIONS SHOWN ARE APPROXIMATE. EXACT LOCATIONS TO BE DETERMINED BY THE ENGINEER.

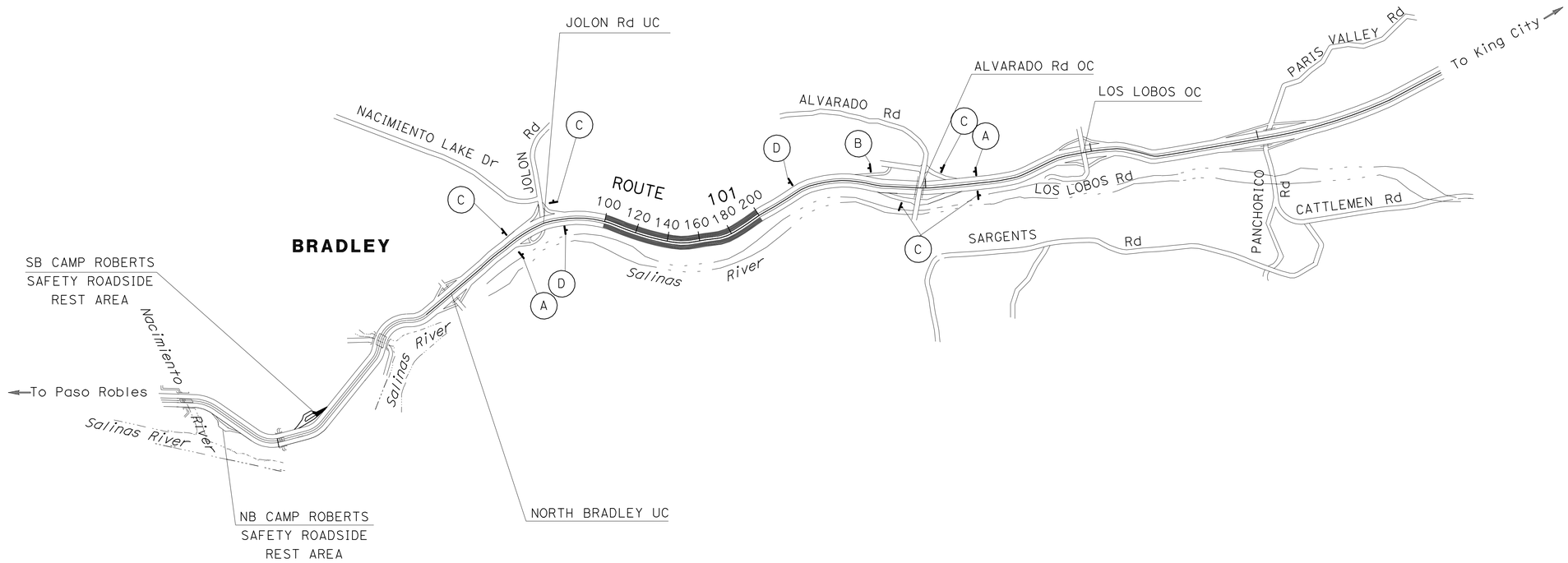

THIS PLAN ACCURATE FOR CONSTRUCTION AREA SIGN WORK ONLY.

CONSTRUCTION AREA SIGNS

NO SCALE

CS-1

STATE OF CALIFORNIA - DEPARTMENT OF TRANSPORTATION
Caltrans® TRAFFIC DESIGN

FUNCTIONAL SUPERVISOR: MOHAMMED QATAMI
CALCULATED-DESIGNED BY: DAVID BLACK
CHECKED BY: FAWZI YAGHMOUR
REVISED BY
DATE REVISED

LAST REVISION 07-14-10 | DATE PLOTTED => 21-SEP-2010 | TIME PLOTTED => 17:51

Dist	COUNTY	ROUTE	POST MILES TOTAL PROJECT	SHEET No.	TOTAL SHEETS
05	Mon	101	R10.8/R12.6	21	38

REGISTERED CIVIL ENGINEER 07-14-10 DATE

9-20-10
PLANS APPROVAL DATE

REGISTERED PROFESSIONAL ENGINEER FAWZI YAGHMOUR No. C-54750 Exp. 12-31-11 CIVIL STATE OF CALIFORNIA

THE STATE OF CALIFORNIA OR ITS OFFICERS OR AGENTS SHALL NOT BE RESPONSIBLE FOR THE ACCURACY OR COMPLETENESS OF SCANNED COPIES OF THIS PLAN SHEET.

LEGEND

XX THERMOPLASTIC TRAFFIC STRIPE (SPRAYABLE)
DETAIL No.

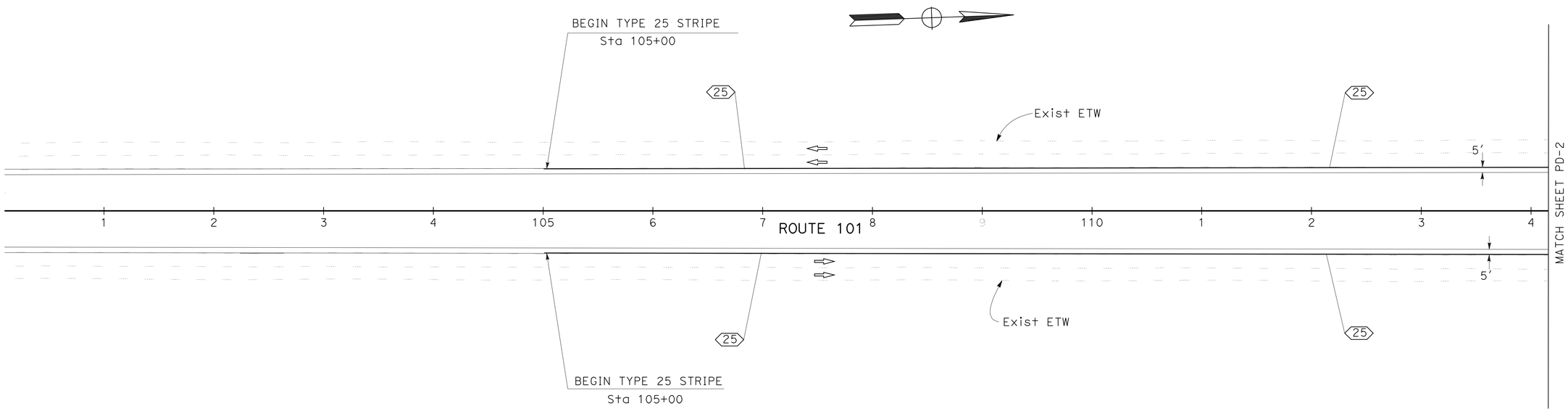

PAVEMENT DELINEATION

SCALE: 1" = 50'

PD-1

THIS PLAN ACCURATE FOR PAVEMENT DELINEATION ONLY.

REVISED BY | DATE REVISED

DAVID BLACK | FAWZI YAGHMOUR

CALCULATED-DESIGNED BY | CHECKED BY

FUNCTIONAL SUPERVISOR: MOHAMMED QATAMI

STATE OF CALIFORNIA - DEPARTMENT OF TRANSPORTATION
Caltrans® TRAFFIC DESIGN

LAST REVISION 07-14-10 | DATE PLOTTED => 21-SEP-2010 | TIME PLOTTED => 17:51

Dist	COUNTY	ROUTE	POST MILES TOTAL PROJECT	SHEET No.	TOTAL SHEETS
05	Mon	101	R10.8/R12.6	22	38

07-14-10
REGISTERED CIVIL ENGINEER DATE

9-20-10
PLANS APPROVAL DATE

REGISTERED PROFESSIONAL ENGINEER
FAWZI YAGHMOUR
No. C-54750
Exp. 12-31-11
CIVIL
STATE OF CALIFORNIA

THE STATE OF CALIFORNIA OR ITS OFFICERS OR AGENTS SHALL NOT BE RESPONSIBLE FOR THE ACCURACY OR COMPLETENESS OF SCANNED COPIES OF THIS PLAN SHEET.

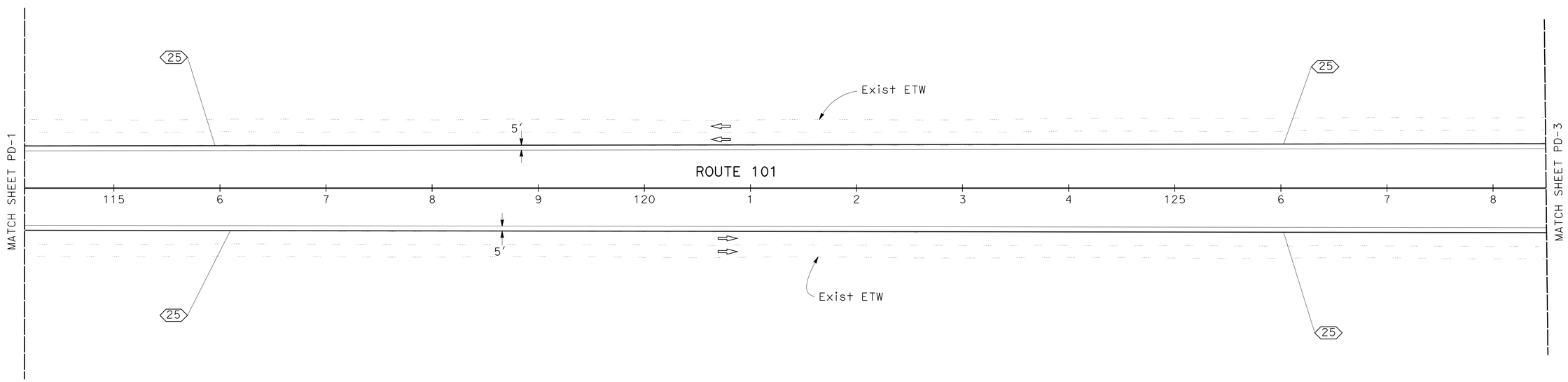

PAVEMENT DELINEATION

SCALE: 1" = 50'

PD-2

THIS PLAN ACCURATE FOR PAVEMENT DELINEATION WORK ONLY.

STATE OF CALIFORNIA - DEPARTMENT OF TRANSPORTATION
Caltrans® **TRAFFIC DESIGN**

FUNCTIONAL SUPERVISOR: MOHAMMED QATAMI
CALCULATED-DESIGNED BY: DAVID BLACK
CHECKED BY: FAWZI YAGHMOUR
REVISED BY
DATE REVISED

LAST REVISION 07-14-10 | DATE PLOTTED => 21-SEP-2010 | TIME PLOTTED => 17:51

Dist	COUNTY	ROUTE	POST MILES TOTAL PROJECT	SHEET No.	TOTAL SHEETS
05	Mon	101	R10.8/R12.6	23	38

REGISTERED CIVIL ENGINEER 07-14-10 DATE

9-20-10
PLANS APPROVAL DATE

REGISTERED PROFESSIONAL ENGINEER
FAWZI YAGHMOUR
No. C-54750
Exp. 12-31-11
CIVIL
STATE OF CALIFORNIA

THE STATE OF CALIFORNIA OR ITS OFFICERS OR AGENTS SHALL NOT BE RESPONSIBLE FOR THE ACCURACY OR COMPLETENESS OF SCANNED COPIES OF THIS PLAN SHEET.

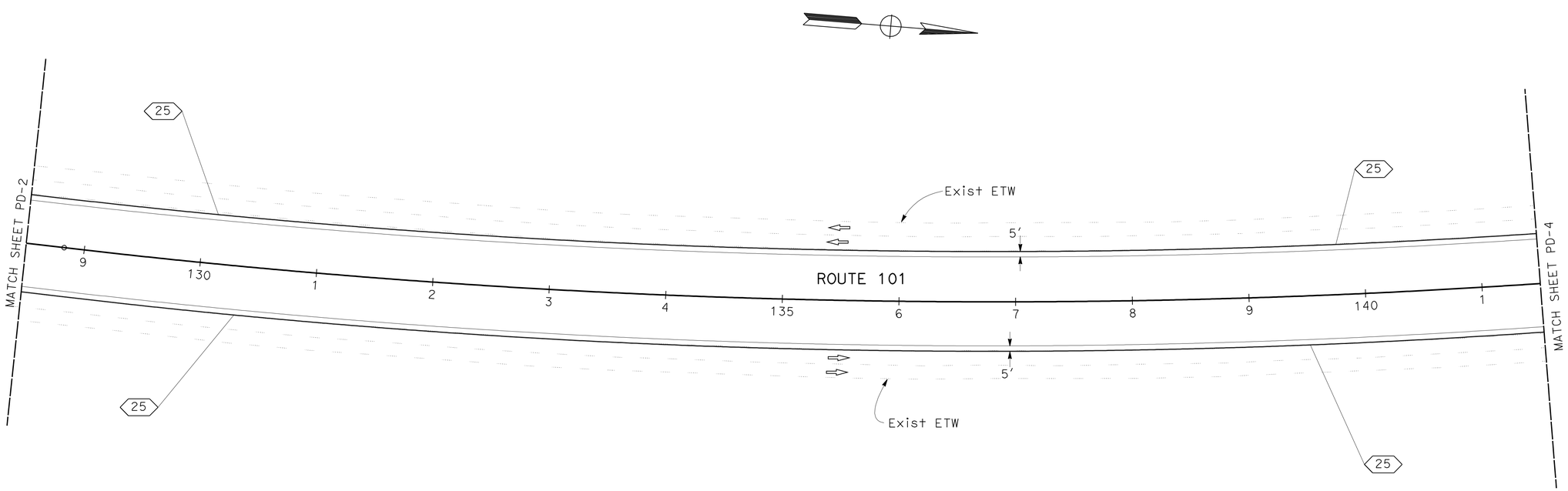

PAVEMENT DELINEATION

THIS PLAN ACCURATE FOR PAVEMENT DELINEATION WORK ONLY.

SCALE: 1" = 50'

PD-3

REVISED BY	DATE REVISED

DAVID BLACK
FAWZI YAGHMOUR

CALCULATED-DESIGNED BY
CHECKED BY

FUNCTIONAL SUPERVISOR
MOHAMMED QATAMI

STATE OF CALIFORNIA - DEPARTMENT OF TRANSPORTATION
Caltrans
TRAFFIC DESIGN

LAST REVISION 07-14-10
DATE PLOTTED => 21-SEP-2010
TIME PLOTTED => 17:52

Dist	COUNTY	ROUTE	POST MILES TOTAL PROJECT	SHEET No.	TOTAL SHEETS
05	Mon	101	R10.8/R12.6	24	38

REGISTERED CIVIL ENGINEER 07-14-10 DATE

9-20-10
PLANS APPROVAL DATE

REGISTERED PROFESSIONAL ENGINEER
FAWZI YAGHMOUR
No. C-54750
Exp. 12-31-11
CIVIL
STATE OF CALIFORNIA

THE STATE OF CALIFORNIA OR ITS OFFICERS OR AGENTS SHALL NOT BE RESPONSIBLE FOR THE ACCURACY OR COMPLETENESS OF SCANNED COPIES OF THIS PLAN SHEET.

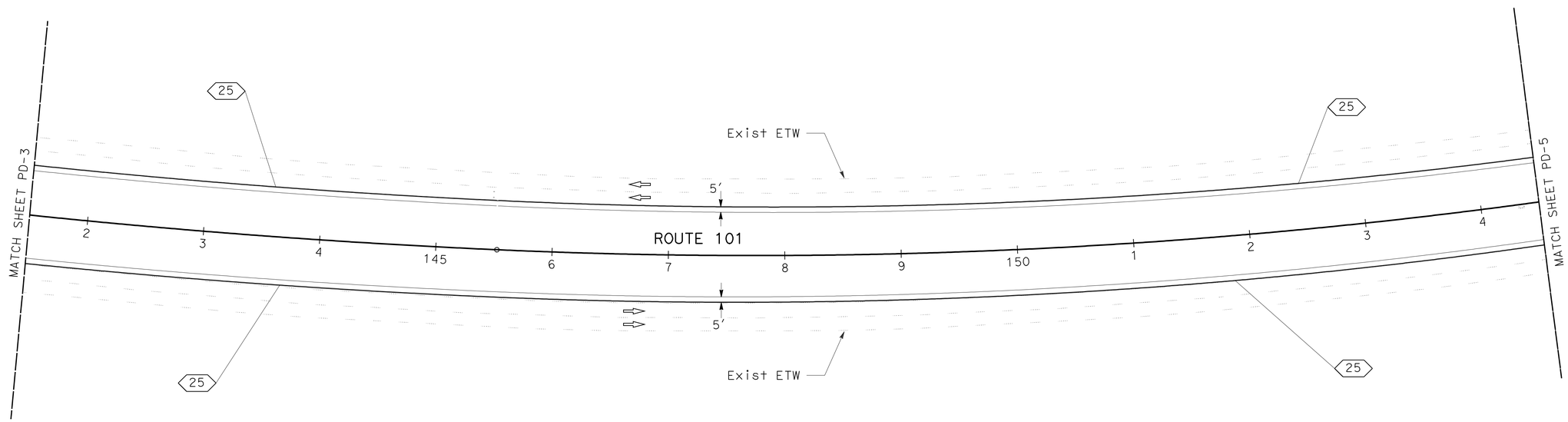

PAVEMENT DELINEATION

SCALE: 1" = 50'

PD-4

THIS PLAN ACCURATE FOR PAVEMENT DELINEATION WORK ONLY.

STATE OF CALIFORNIA - DEPARTMENT OF TRANSPORTATION
Caltrans® **TRAFFIC DESIGN**

FUNCTIONAL SUPERVISOR: MOHAMMED QATAMI

CALCULATED-DESIGNED BY: DAVID BLACK
CHECKED BY: FAWZI YAGHMOUR

REVISED BY
DATE REVISED

LAST REVISION 07-14-10
DATE PLOTTED => 21-SEP-2010
TIME PLOTTED => 18:15

Dist	COUNTY	ROUTE	POST MILES TOTAL PROJECT	SHEET No.	TOTAL SHEETS
05	Mon	101	R10.8/R12.6	25	38

REGISTERED CIVIL ENGINEER 07-14-10 DATE

9-20-10
PLANS APPROVAL DATE

REGISTERED PROFESSIONAL ENGINEER FAWZI YAGHMOUR No. C-54750 Exp. 12-31-11 CIVIL STATE OF CALIFORNIA

THE STATE OF CALIFORNIA OR ITS OFFICERS OR AGENTS SHALL NOT BE RESPONSIBLE FOR THE ACCURACY OR COMPLETENESS OF SCANNED COPIES OF THIS PLAN SHEET.

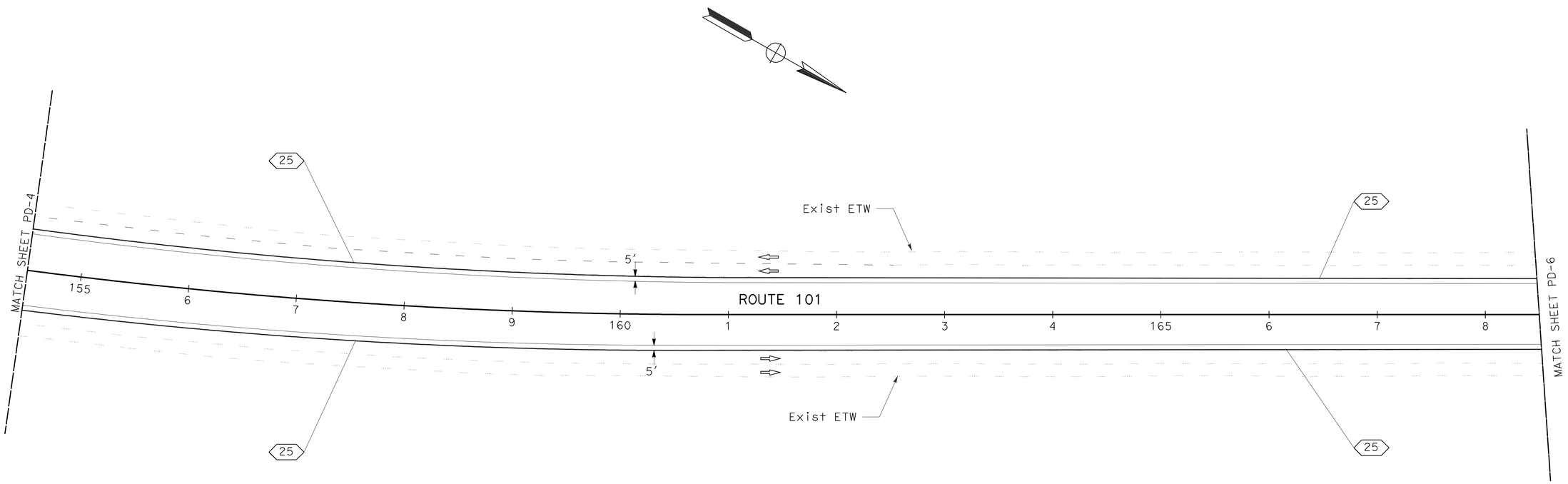

PAVEMENT DELINEATION

SCALE: 1" = 50'

PD-5

THIS PLAN ACCURATE FOR PAVEMENT DELINEATION WORK ONLY.

STATE OF CALIFORNIA - DEPARTMENT OF TRANSPORTATION
Caltrans® **TRAFFIC DESIGN**

FUNCTIONAL SUPERVISOR: MOHAMMED QATAMI

CALCULATED-DESIGNED BY: DAVID BLACK
CHECKED BY: FAWZI YAGHMOUR

REVISED BY
DATE REVISED

LAST REVISION 07-14-10 | DATE PLOTTED => 21-SEP-2010 | TIME PLOTTED => 18:15

Dist	COUNTY	ROUTE	POST MILES TOTAL PROJECT	SHEET No.	TOTAL SHEETS
05	Mon	101	R10.8/R12.6	26	38

REGISTERED CIVIL ENGINEER 07-14-10 DATE

9-20-10
PLANS APPROVAL DATE

REGISTERED PROFESSIONAL ENGINEER
FAWZI YAGHMOUR
No. C-54750
Exp. 12-31-11
CIVIL
STATE OF CALIFORNIA

THE STATE OF CALIFORNIA OR ITS OFFICERS OR AGENTS SHALL NOT BE RESPONSIBLE FOR THE ACCURACY OR COMPLETENESS OF SCANNED COPIES OF THIS PLAN SHEET.

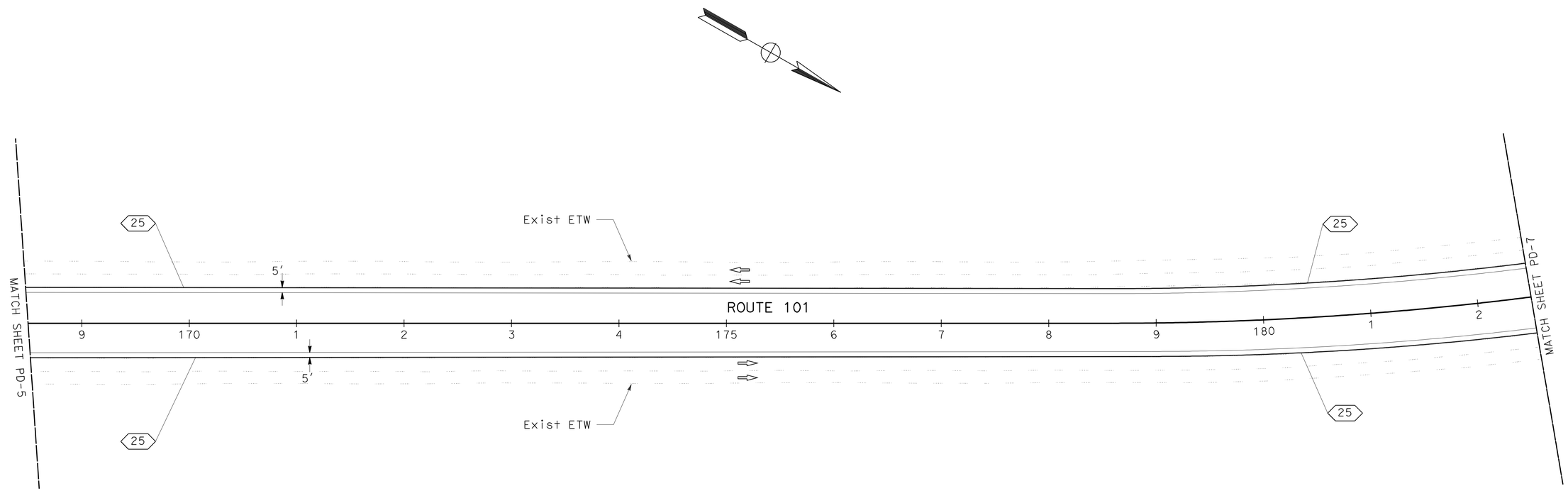

PAVEMENT DELINEATION

SCALE: 1" = 50'

THIS PLAN ACCURATE FOR PAVEMENT DELINEATION WORK ONLY.

PD-6

STATE OF CALIFORNIA - DEPARTMENT OF TRANSPORTATION
Caltrans® **TRAFFIC DESIGN**

FUNCTIONAL SUPERVISOR: MOHAMMED QATAMI
CALCULATED-DESIGNED BY: DAVID BLACK
CHECKED BY: FAWZI YAGHMOUR
REVISED BY
DATE REVISED

LAST REVISION 07-14-10 | DATE PLOTTED => 21-SEP-2010 | TIME PLOTTED => 18:15

Dist	COUNTY	ROUTE	POST MILES TOTAL PROJECT	SHEET No.	TOTAL SHEETS
05	Mon	101	R10.8/R12.6	27	38

REGISTERED CIVIL ENGINEER 07-14-10 DATE

9-20-10
PLANS APPROVAL DATE

REGISTERED PROFESSIONAL ENGINEER
FAWZI YAGHMOUR
No. C-54750
Exp. 12-31-11
CIVIL
STATE OF CALIFORNIA

THE STATE OF CALIFORNIA OR ITS OFFICERS OR AGENTS SHALL NOT BE RESPONSIBLE FOR THE ACCURACY OR COMPLETENESS OF SCANNED COPIES OF THIS PLAN SHEET.

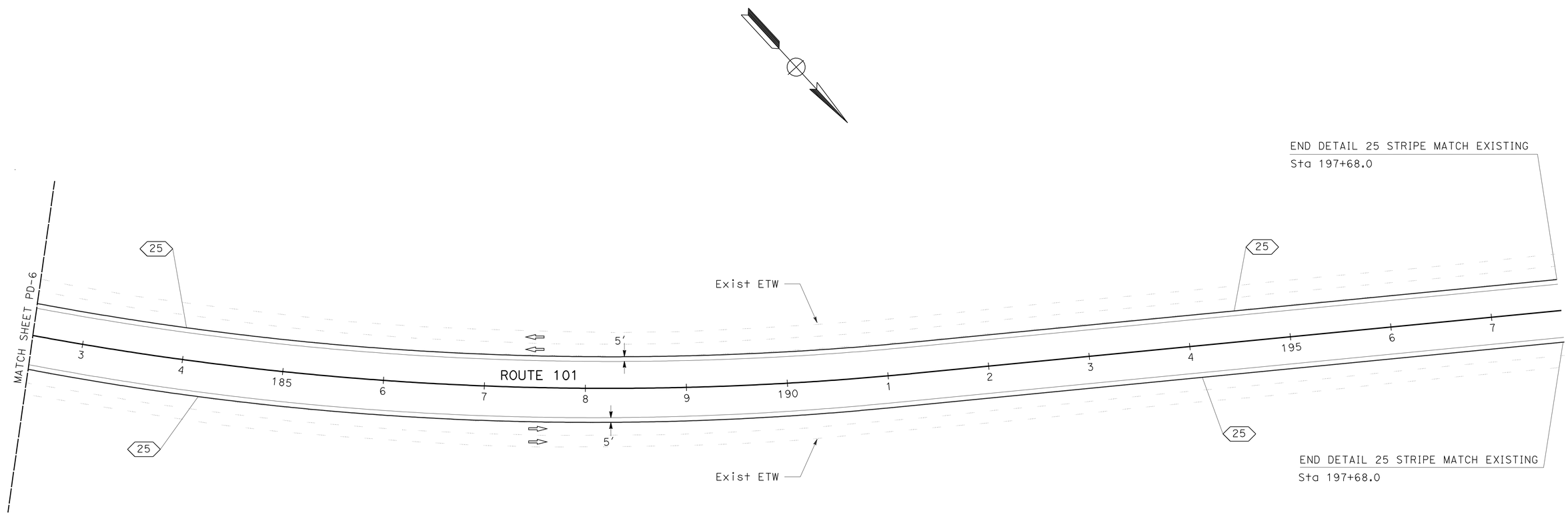

PAVEMENT DELINEATION

SCALE: 1" = 50'

PD-7

THIS PLAN ACCURATE FOR PAVEMENT DELINEATION WORK ONLY.

STATE OF CALIFORNIA - DEPARTMENT OF TRANSPORTATION
Caltrans® **TRAFFIC DESIGN**

FUNCTIONAL SUPERVISOR: MOHAMMED QATAMI
CALCULATED-DESIGNED BY: DAVID BLACK
CHECKED BY: FAWZI YAGHMOUR
REVISED BY
DATE REVISED

LAST REVISION 07-14-10
DATE PLOTTED => 21-SEP-2010
TIME PLOTTED => 18:15

Dist	COUNTY	ROUTE	POST MILES TOTAL PROJECT	SHEET No.	TOTAL SHEETS
05	Mon	101	R10.8/R12.6	28	38

REGISTERED CIVIL ENGINEER 07-14-10 DATE

9-20-10
PLANS APPROVAL DATE

REGISTERED PROFESSIONAL ENGINEER FAWZI YAGHMOUR No. C-54750 Exp. 12-31-11 CIVIL STATE OF CALIFORNIA

THE STATE OF CALIFORNIA OR ITS OFFICERS OR AGENTS SHALL NOT BE RESPONSIBLE FOR THE ACCURACY OR COMPLETENESS OF SCANNED COPIES OF THIS PLAN SHEET.

PAVEMENT DELINEATION QUANTITIES

SHEET No.	STATION TO STATION	DETAIL No.	PAVEMENT MARKER (RETROREFLECTIVE) TYPE D	REMOVE PAVEMENT MARKER	THERMOPLASTIC TRAFFIC STRIPE (SPRAYABLE) 4" YELLOW
			EA	EA	LF
PD-1	105+00 TO 114+15	25	40	40	1830
PD-2	114+15 TO 128+50	25	64	64	2870
PD-3	128+50 TO 141+50	25	58	58	2600
PD-4	141+50 TO 154+50	25	58	58	2600
PD-5	154+50 TO 168+50	25	62	62	2800
PD-6	168+50 TO 182+50	25	62	62	2800
PD-7	182+50 TO 197+68	25	66	66	3036
	TOTAL		410	410	18,536

PAVEMENT DELINEATION QUANTITIES
PDQ-1

STATE OF CALIFORNIA - DEPARTMENT OF TRANSPORTATION
Caltrans TRAFFIC DESIGN

FUNCTIONAL SUPERVISOR: MOHAMMED QATAMI
CALCULATED-DESIGNED BY: DAVID BLACK
CHECKED BY: FAWZI YAGHMOUR
REVISED BY
DATE REVISED

LAST REVISION 07-14-10
DATE PLOTTED => 21-SEP-2010
TIME PLOTTED => 18:15

Dist	COUNTY	ROUTE	POST MILES TOTAL PROJECT	SHEET No.	TOTAL SHEETS
05	Mon	101	R10.8/R12.6	29	38

REGISTERED CIVIL ENGINEER DATE 07-15-10

PLANS APPROVAL DATE 9-20-10

REGISTERED PROFESSIONAL ENGINEER KHALID A. DAHIR No. 70240 Exp. 9/30/10 CIVIL STATE OF CALIFORNIA

THE STATE OF CALIFORNIA OR ITS OFFICERS OR AGENTS SHALL NOT BE RESPONSIBLE FOR THE ACCURACY OR COMPLETENESS OF SCANNED COPIES OF THIS PLAN SHEET.

ROADWAY QUANTITIES

STATION TO STATION	DIRECTION	HOT MIX ASPHALT (TYPE A)	ASPHALTIC EMULSION (FOG SEAL COAT) (N)	TACK COAT	CLASS 2 AB	ROADWAY EXCAVATION	EMBANKMENT (N)	PLACE HMA DIKE (TYPE A)	PLACE HMA (Misc AREA)
		TON	TON	TON	CY	CY	CY	LF	SQYD
105+00 TO 197+68	NB/SB	2058	5	5	2746	3776	1290		
170+60 TO 180+50	NB	* 30						990	
170+84	NB	** 1.6							9.3
	TOTAL	2089.6		5	2746	3776	1290	990	9.3

(N) NOT A SEPARATE PAY ITEM, FOR INFORMATION PURPOSES ONLY

* QUANTITY IS FOR HMA DIKE

** QUANTITY IS FOR OVERSIDE DRAIN

PERMANENT EROSION CONTROL

STATION TO STATION	EROSION CONTROL (HYDROSEED)	(N) SEED	(N) FIBER	(N) TACKIFIER	EROSION CONTROL (COMPOST BLANKET)	REMARKS
	ACRE	LB	LB	LB	CY	- EROSION CONTROL (COMPOST BLANKET) TO BE APPLIED AT MINIMUM 1 INCH DEPTH - EROSION CONTROL (HYDROSEED) AND EROSION CONTROL (COMPOST BLANKET) TO BE APPLIED AT ALL AREAS DISTURBED BY CONSTRUCTION ACTIVITIES
105+00 TO 197+68	5.3	160	5300	670	710	
NOTE: (N) NOT A SEPARATE PAY ITEM, FOR INFORMATION ONLY.						

WATER POLLUTION CONTROL

PLAN SHEET No.	TEMPORARY CHECK DAM	TEMPORARY DRAINAGE INLET PROTECTION
	LF	EA
L-2	40	2
L-4	40	2
L-5	20	1
L-6	40	2
L-7	20	1
TOTAL	160	8

TREE REMOVAL (N)

SHEET No.	STATION	LEFT	RIGHT	DBH (Ft)	SPECIES
L-4	147+13	X		2	OAK
L-6	169+39		X	1.5	OAK
L-6	170+75	X		1	OAK
NOTE: (N) NOT A SEPARATE PAY ITEM, FOR INFORMATION ONLY.					

RUMBLE STRIP

STATION TO STATION	LOCATION	
	NB	SB
	Sta	Sta
105+00 TO 197+68	92.68	92.68
TOTAL	185.36	

SURVEY MONUMENT

STATION	OFFSET	SURVEY MONUMENT (TYPE A)	REMOVE SURVEY MONUMENT
		EA	EA
109+99.95 CL1 Rte 101	16.782' Rt	1	1
	TOTAL	1	1

SUMMARY OF QUANTITIES

Q-1

STATE OF CALIFORNIA - DEPARTMENT OF TRANSPORTATION

Caltrans DESIGN

FUNCTIONAL SUPERVISOR: SCOTT SHAVER

CALCULATED-DESIGNED BY: JOHNNY REYES

CHECKED BY: KHALID DAHIR

REVISED BY

DATE REVISED

LAST REVISION DATE PLOTTED => 22-SEP-2010 TIME PLOTTED => 09:34

07-14-10

DIST	COUNTY	ROUTE	POST MILES TOTAL PROJECT	SHEET NO.	TOTAL SHEETS
05	Mon	101	R10.8/R12.6	30	38

Mark S. Turner
PROFESSIONAL LAND SURVEYOR

June 30, 2006
PLANS APPROVAL DATE

LICENSED LAND SURVEYOR
Mark S. Turner
No. 6228
Exp. 3-31-08
STATE OF CALIFORNIA

The State of California or its officers or agents shall not be responsible for the accuracy or completeness of electronic copies of this plan sheet.

To accompany plans dated 9-20-10

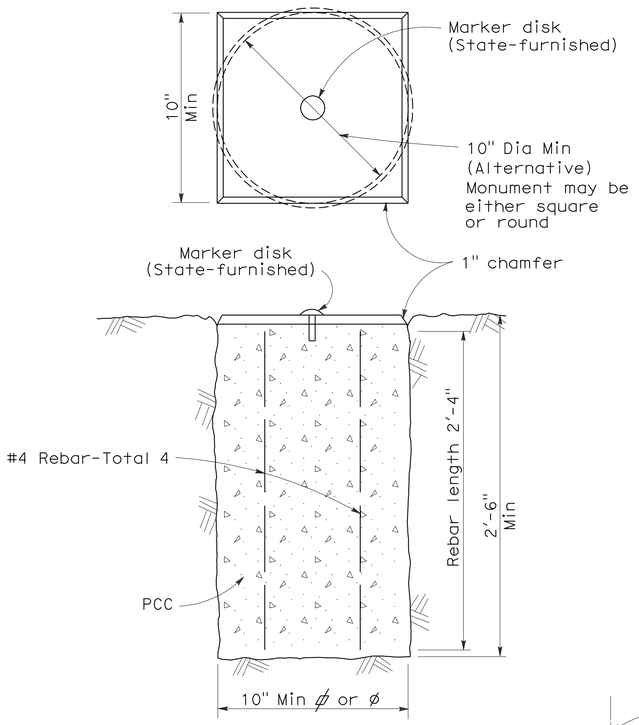

TYPE A

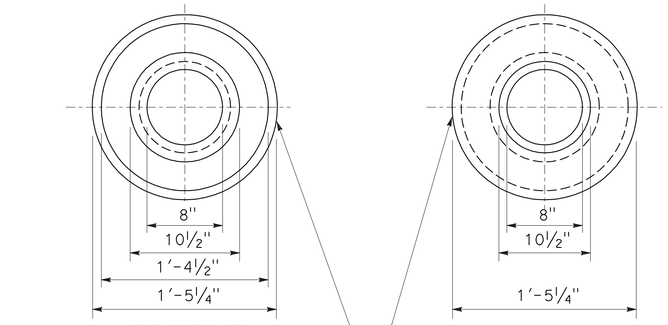

TOP VIEW OF
MONUMENT OF WELL RING

BOTTOM VIEW OF
MONUMENT OF WELL RING

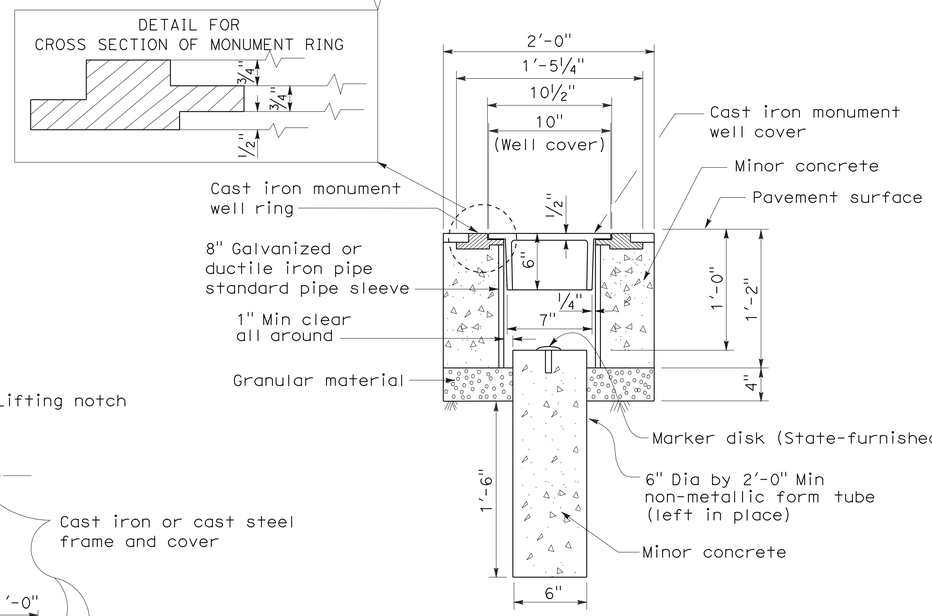

TYPE B

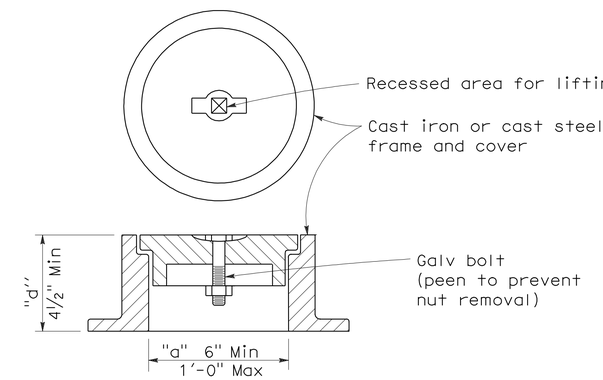

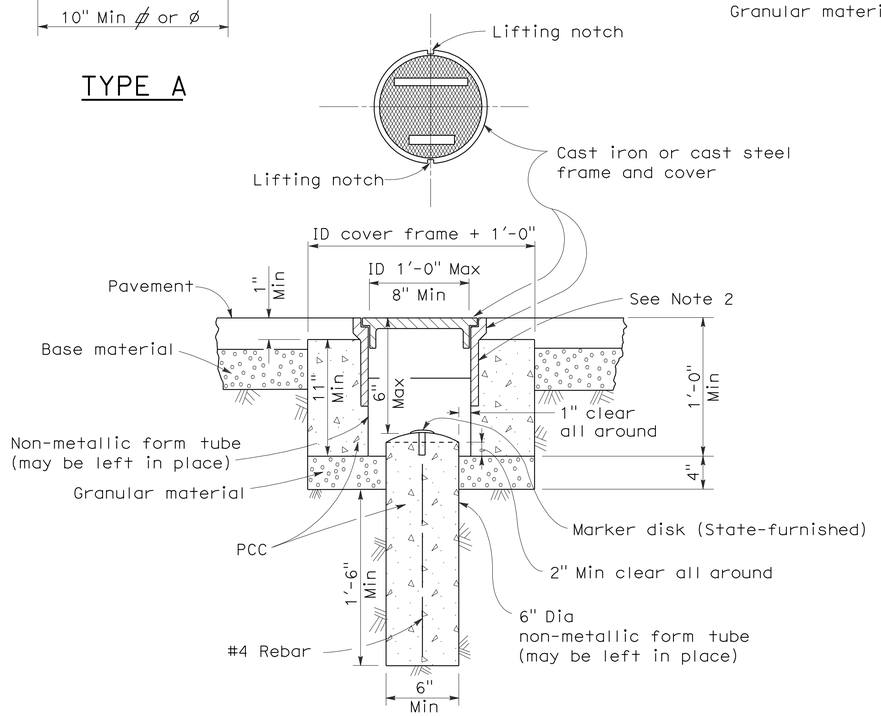

TYPE D
Alternative No. 1

NOTES:

1. The configuration of the cast iron or cast steel frame and cover may vary from that shown.
2. Frame shall be embedded in the concrete a minimum of 3".
3. Type D monument shall be either Alternative No. 1 or Alternative No. 2 at the contractor's option.
4. All portland cement concrete shall be Class 2 or minor concrete with 1" maximum aggregate.

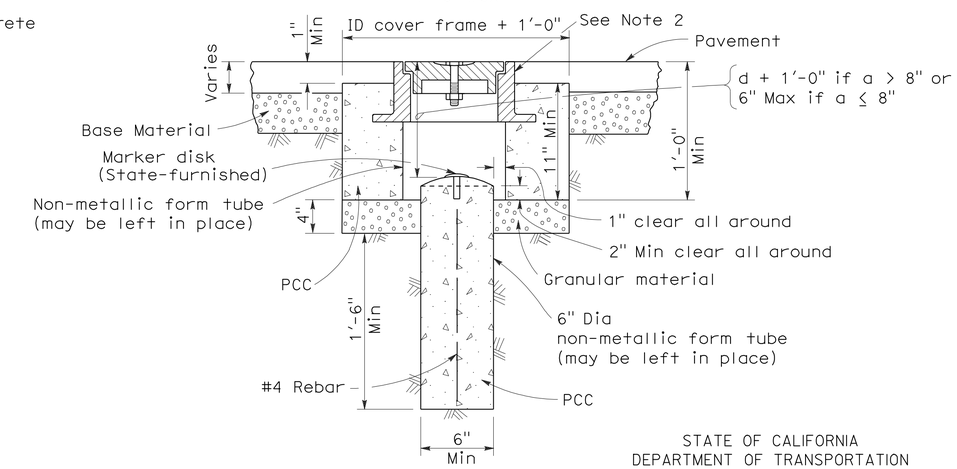

TYPE D
Alternative No. 2

STATE OF CALIFORNIA
DEPARTMENT OF TRANSPORTATION

SURVEY MONUMENTS

NO SCALE

RSP A74 DATED JUNE 30, 2006 SUPERSEDES STANDARD PLAN DATED MAY 1, 2006 - PAGE 28 OF THE STANDARD PLANS BOOK DATED MAY 2006.

REVISED STANDARD PLAN RSP A74

2006 REVISED STANDARD PLAN RSP A74

5-24-06

DIST	COUNTY	ROUTE	POST MILES TOTAL PROJECT	SHEET NO.	TOTAL SHEETS
05	Mon	101	R10.8/R12.6	31	38

Randell D. Hiatt
REGISTERED CIVIL ENGINEER

June 6, 2008
PLANS APPROVAL DATE

REGISTERED PROFESSIONAL ENGINEER
Randell D. Hiatt
No. C50200
Exp. 6-30-09
CIVIL
STATE OF CALIFORNIA

The State of California or its officers or agents shall not be responsible for the accuracy or completeness of electronic copies of this plan sheet.

To accompany plans dated 9-20-10

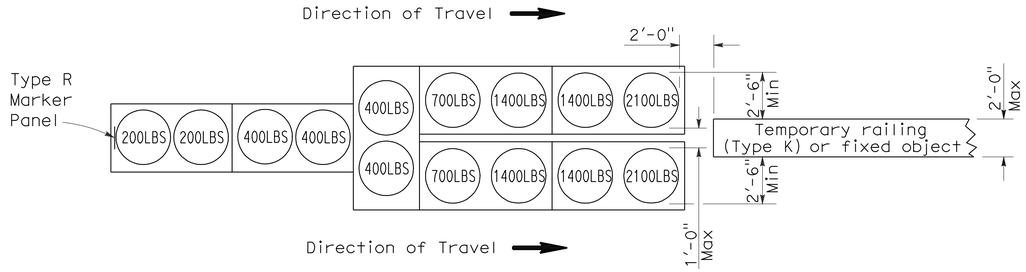

ARRAY 'TU14'

Approach speed 45 mph or more

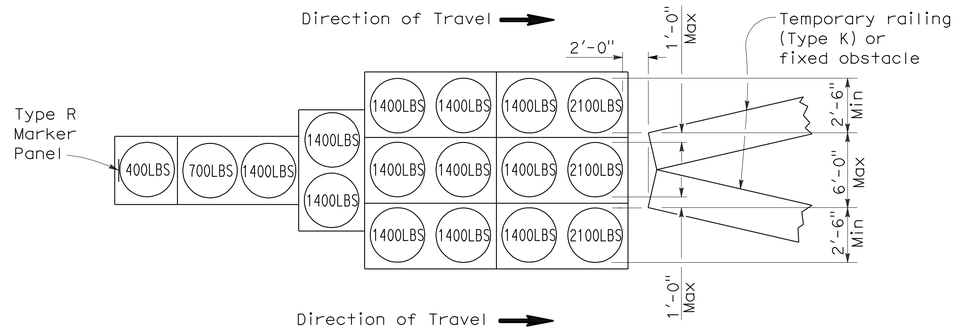

ARRAY 'TU17'

Approach speed less than 45 mph

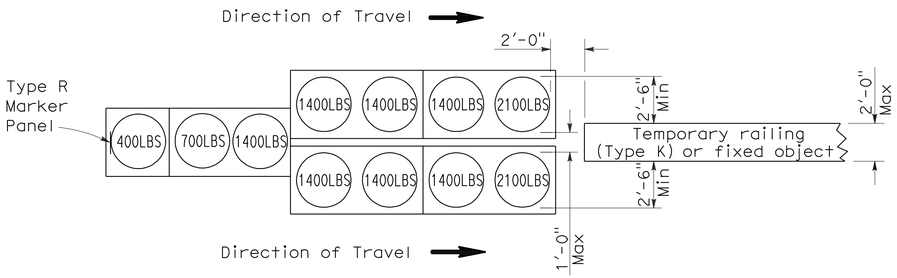

ARRAY 'TU11'

Approach speed less than 45 mph

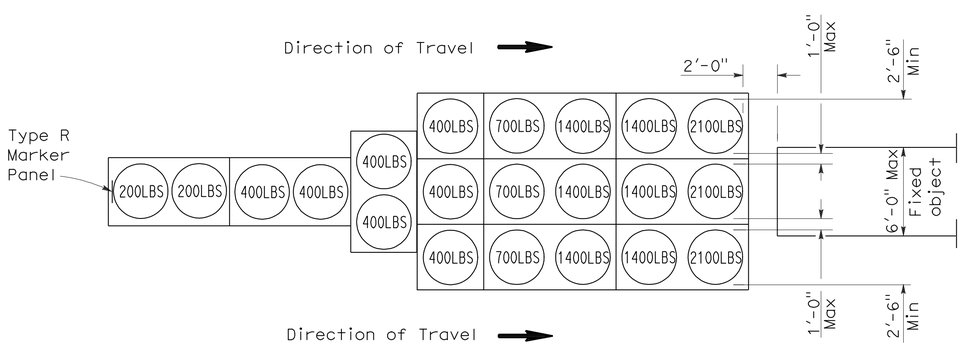

ARRAY 'TU21'

Approach speed 45 mph or more

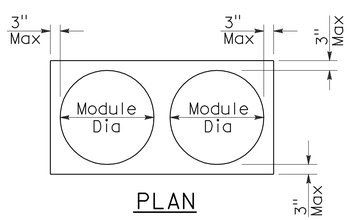

PLAN

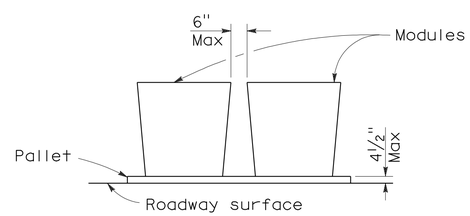

ELEVATION

CRASH CUSHION PALLET DETAIL

See Note 7

NOTES:

1. (XXX) Indicates sand filled module location and weight of sand in pounds for each module. Module spacing is based on the greater diameter of the module.
2. All sand weights are nominal.
3. Temporary crash cushion arrays shall not encroach on the traveled way.
4. Place the top of Type R marker panel 1" below the module lid.
5. Refer to Standard Plan A73B for marker details.
6. Approach speeds indicated conform to NCHRP 350 Report criteria.
7. Use of pallets is optional.

STATE OF CALIFORNIA
DEPARTMENT OF TRANSPORTATION

TEMPORARY CRASH CUSHION, SAND FILLED (UNIDIRECTIONAL)

NO SCALE

RSP T1A DATED JUNE 6, 2008 SUPERSEDES STANDARD PLAN T1A
DATED MAY 1, 2006 - PAGE 211 OF THE STANDARD PLANS BOOK DATED MAY 2006.

REVISED STANDARD PLAN RSP T1A

2006 REVISED STANDARD PLAN RSP T1A

DIST	COUNTY	ROUTE	POST MILES TOTAL PROJECT	SHEET NO.	TOTAL SHEETS
05	Mon	101	R10.8/R12.6	32	38

Randell D. Hiatt
REGISTERED CIVIL ENGINEER

June 6, 2008
PLANS APPROVAL DATE

REGISTERED PROFESSIONAL ENGINEER
Randell D. Hiatt
No. C50200
Exp. 6-30-09
CIVIL
STATE OF CALIFORNIA

The State of California or its officers or agents shall not be responsible for the accuracy or completeness of electronic copies of this plan sheet.

To accompany plans dated 9-20-10

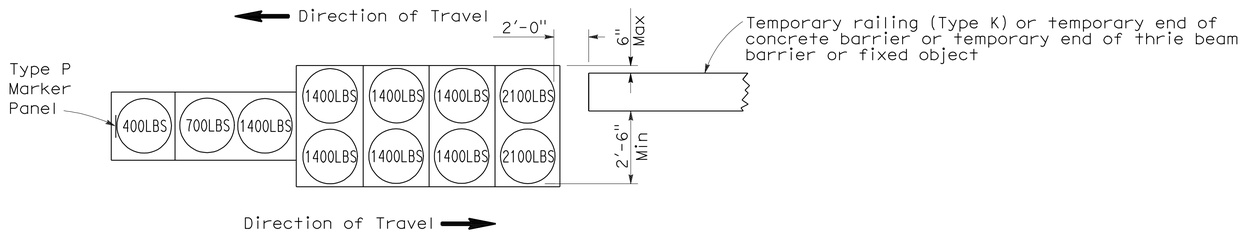

ARRAY 'TB11'

Approach speed less than 45 mph

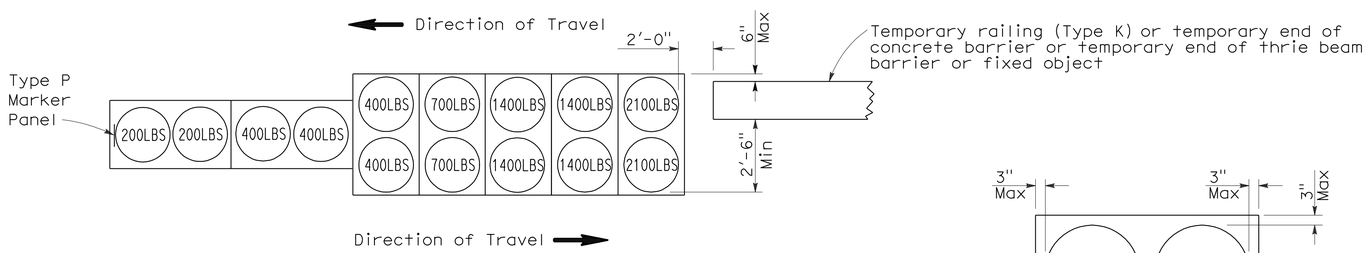

ARRAY 'TB14'

Approach speed 45 mph or more

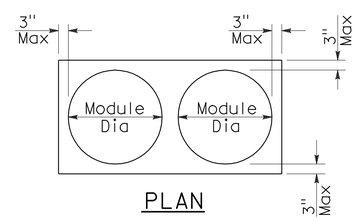

PLAN

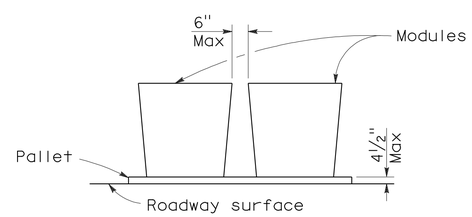

ELEVATION

CRASH CUSHION PALLET DETAIL

See Note 7

NOTES:

1. (XXX) Indicates sand filled module location and weight of sand in pounds for each module. Module spacing is based on the greater diameter of the module.
2. All sand weights are nominal.
3. Temporary crash cushion arrays shall not encroach on the traveled way.
4. Place the Type P marker panel so that the bottom of the panel rests upon the pallet.
5. Refer to Standard Plan A73B for marker details.
6. Approach speeds indicated conform to NCHRP 350 Report criteria.
7. Use of pallets is optional.

STATE OF CALIFORNIA
DEPARTMENT OF TRANSPORTATION

TEMPORARY CRASH CUSHION, SAND FILLED (BIDIRECTIONAL)

NO SCALE

RSP T1B DATED JUNE 6, 2008 SUPERSEDES STANDARD PLAN T1B
DATED MAY 1, 2006 - PAGE 212 OF THE STANDARD PLANS BOOK DATED MAY 2006.

REVISED STANDARD PLAN RSP T1B

2006 REVISED STANDARD PLAN RSP T1B

5-15-08

DIST	COUNTY	ROUTE	POST MILES TOTAL PROJECT	SHEET NO.	TOTAL SHEETS
05	Mon	101	R10.8/R12.6	33	38

Randell D. Hiatt
REGISTERED CIVIL ENGINEER

June 6, 2008
PLANS APPROVAL DATE

REGISTERED PROFESSIONAL ENGINEER
Randell D. Hiatt
No. C50200
Exp. 6-30-09
CIVIL
STATE OF CALIFORNIA

The State of California or its officers or agents shall not be responsible for the accuracy or completeness of electronic copies of this plan sheet.

To accompany plans dated 9-20-10

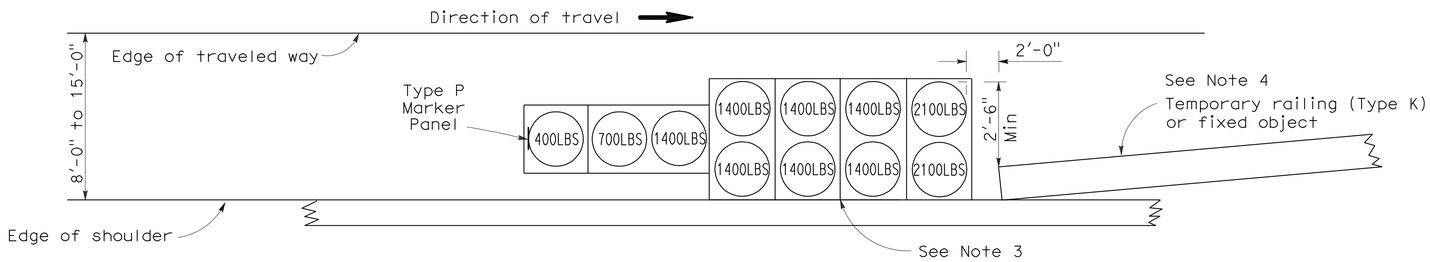

ARRAY 'TS11'

Approach speed less than 45 mph
See Note 9

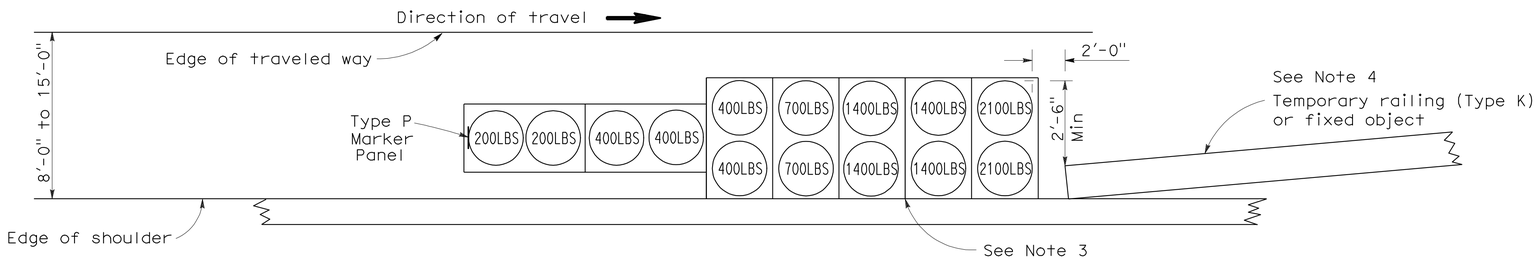

ARRAY 'TS14'

Approach speed 45 mph or more
See Note 9

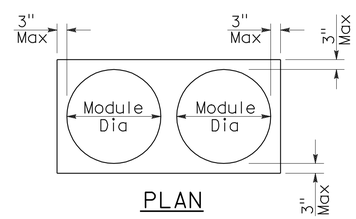

PLAN

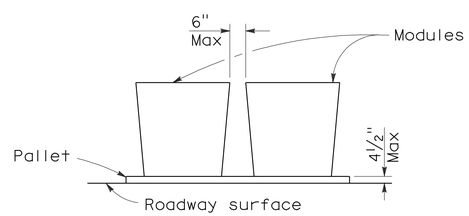

ELEVATION

CRASH CUSHION PALLET DETAIL

See Note 11

NOTES:

1. (XXX) Indicates sand filled module location and weight of sand in pounds for each module. Module spacing is based on the greater diameter of the module.
2. All sand weights are nominal.
3. The temporary crash cushion arrays shown on this plan shall be used only in locations where there will be traffic on one side of the temporary crash cushion array.
4. If the fixed object or approach end of the temporary railing is less than 15'-0" from the edge of traveled way, a temporary crash cushion is required in a construction or work zone.
5. Temporary crash cushion arrays shall not encroach on the traveled way.
6. Arrays for median shoulders shall conform to details shown on this plan for outside shoulders.
7. Place the Type P marker panel so that the bottom of the panel rests upon the pallet and faces traffic.
8. Refer to Standard Plan A73B for marker details.
9. For shoulder widths less than 8'-0", appropriate approved crash cushion protection, other than sand filled modules, shall be provided at fixed objects and at approach ends of temporary railing. The specific type of crash cushion shall be as shown on the project plans or as specified in the Special Provisions, or if not shown on the project plans or specified in the Special Provisions, shall be as approved by the Engineer.
10. Approach speeds indicated conform to NCHRP 350 Report criteria.
11. Use of pallets is optional.

STATE OF CALIFORNIA
DEPARTMENT OF TRANSPORTATION

TEMPORARY CRASH CUSHION, SAND FILLED (SHOULDER INSTALLATIONS)

NO SCALE

RSP T2 DATED JUNE 6, 2008 SUPERSEDES STANDARD PLAN T2
DATED MAY 1, 2006 - PAGE 213 OF THE STANDARD PLANS BOOK DATED MAY 2006.

REVISED STANDARD PLAN RSP T2

2006 REVISED STANDARD PLAN RSP T2

DIST	COUNTY	ROUTE	POST MILES TOTAL PROJECT	SHEET NO.	TOTAL SHEETS
05	Mon	101	R10.8/R12.6	34	38

REGISTERED CIVIL ENGINEER

November 17, 2006
PLANS APPROVAL DATE

REGISTERED PROFESSIONAL ENGINEER
Greg W. Edwards
No. C36386
Exp. 6-30-08
CIVIL
STATE OF CALIFORNIA

The State of California or its officers or agents shall not be responsible for the accuracy or completeness of electronic copies of this plan sheet.

To accompany plans dated 9-20-10

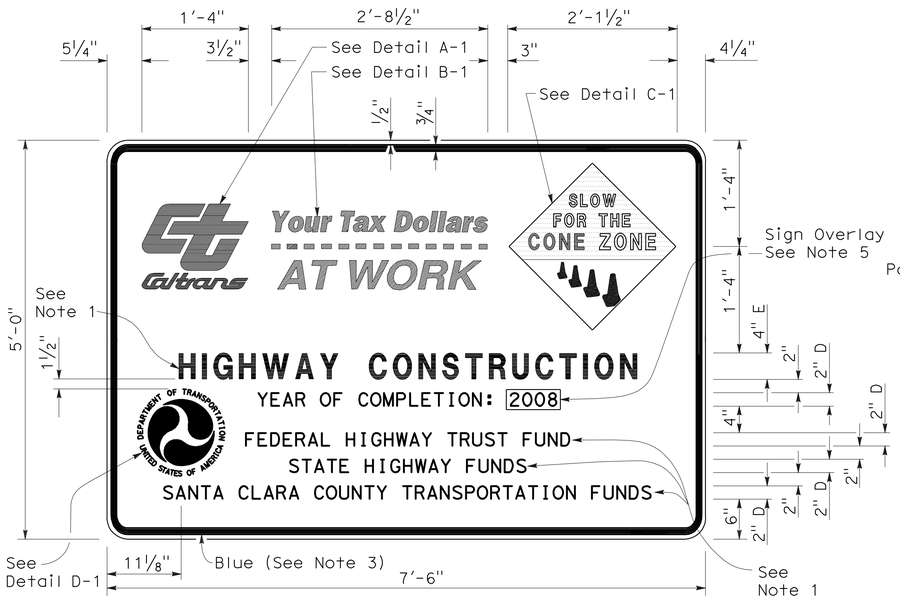

TYPE 1

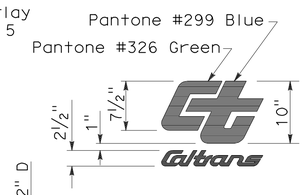

DETAIL A-1

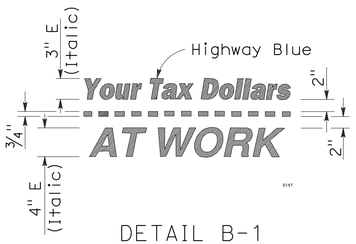

DETAIL B-1
(See Note 3)

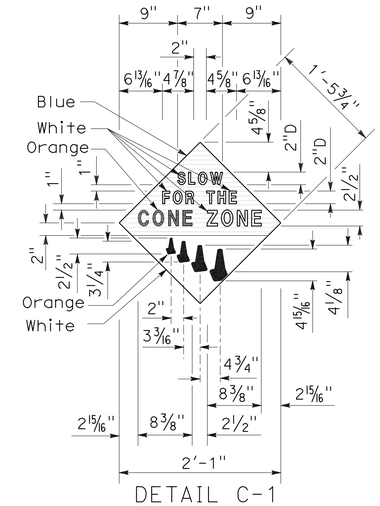

DETAIL C-1
(See Note 4)

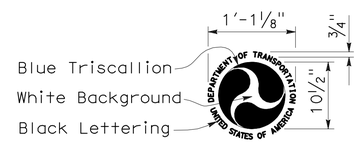

DETAIL D-1
(See Note 6)

NOTES:

1. The sign messages shown for type of project and fund types are examples only. See the Special Provisions for the applicable type of project and fund type messages to be used.
2. Except as otherwise shown, the legend of sign shall be black on a white background (non-reflective).
3. The border of the signs and details "B-1" and "B-2" shall be blue (non-reflective).
4. The diamond in details "C-1" and "C-2" shall be blue for the background of message, " SLOW FOR THE CONE ZONE", and white background for the orange cones. The color and type of font for the "SLOW FOR THE CONE ZONE" message shall be: "SLOW" white D; "FOR THE" white D; "CONE" orange Arial font; "ZONE" white Arial font.
5. Year of completion of project construction shown on the overlay is an example only. See the Special Provisions.
6. Use when the Project involves Federal Highway Trust Fund.

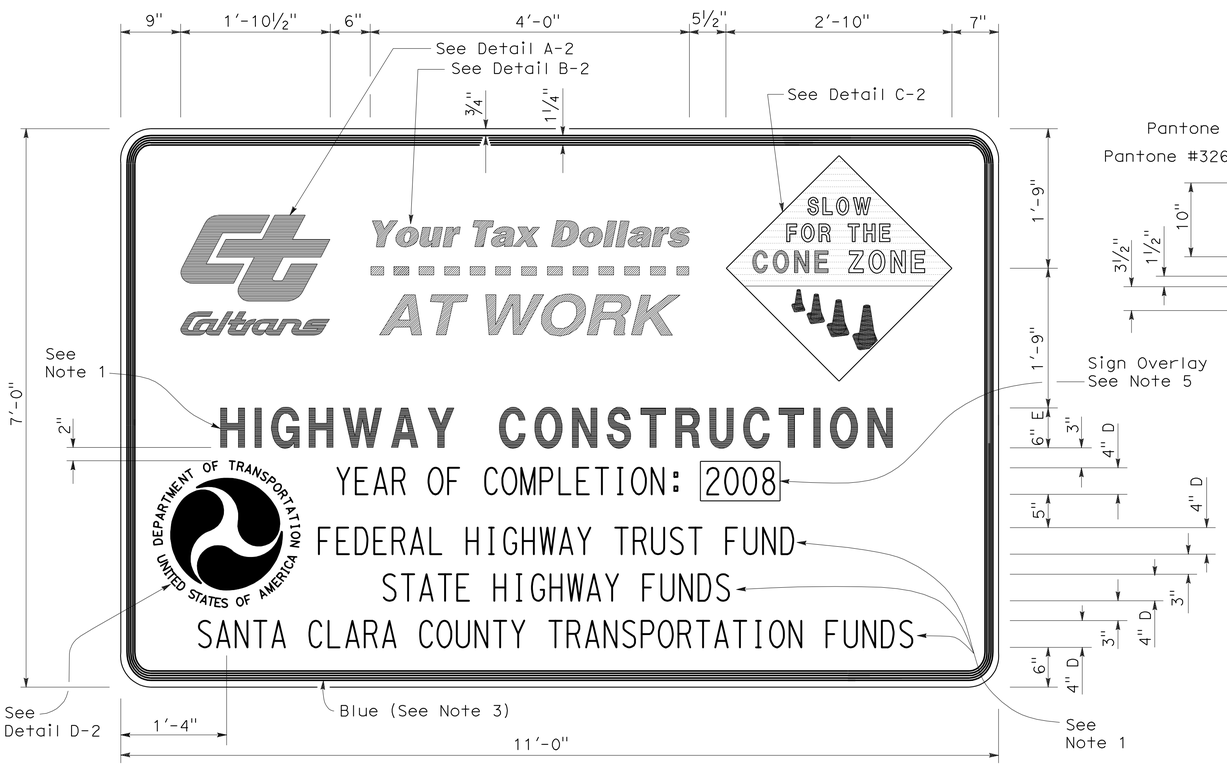

TYPE 2

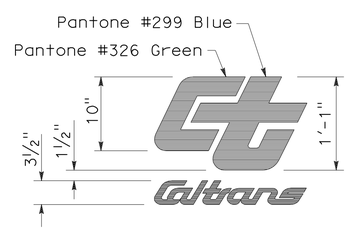

DETAIL A-2

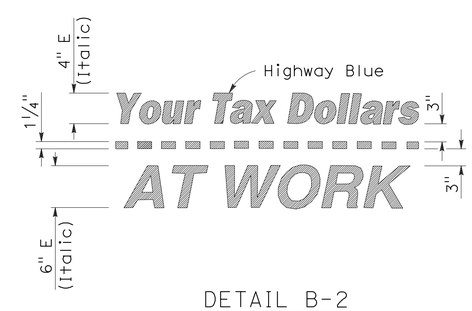

DETAIL B-2
(See Note 3)

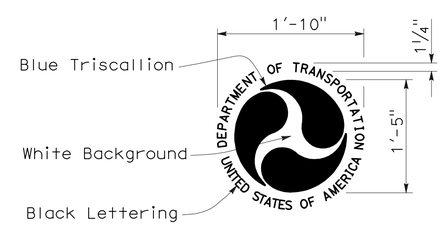

DETAIL D-2
(See Note 6)

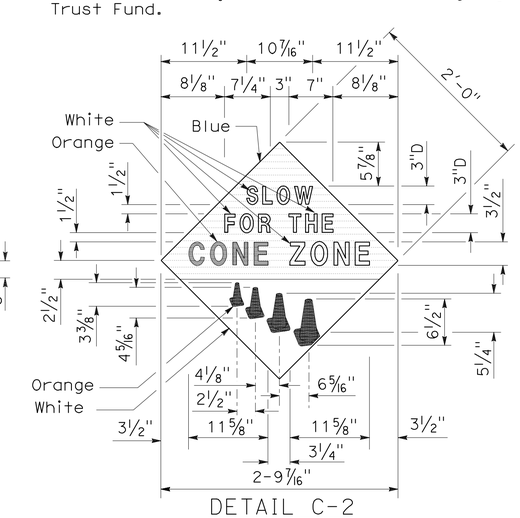

DETAIL C-2
(See Note 4)

STATE OF CALIFORNIA
DEPARTMENT OF TRANSPORTATION

CONSTRUCTION PROJECT FUNDING IDENTIFICATION SIGNS

NO SCALE

RSP T7 DATED NOVEMBER 17, 2006 SUPERSEDES STANDARD PLAN T7
DATED MAY 1, 2006 - PAGE 217 OF THE STANDARD PLANS BOOK DATED MAY 2006.

REVISED STANDARD PLAN RSP T7

2006 REVISED STANDARD PLAN RSP T7

9-7-06

DIST	COUNTY	ROUTE	POST MILES TOTAL PROJECT	SHEET NO.	TOTAL SHEETS
05	Mon	101	R10.8/R12.6	35	38

Robert B Schott
LICENSED LANDSCAPE ARCHITECT

August 15, 2008
PLANS Approval DATE

LICENSED LANDSCAPE ARCHITECT
Robert B. Schott 3695
Signature
11-04-08
Renewal Date
08-11-08
Date
STATE OF CALIFORNIA

The State of California or its officers or agents shall not be responsible for the accuracy or completeness of electronic copies of this plan sheet.

To accompany plans dated 9-20-10

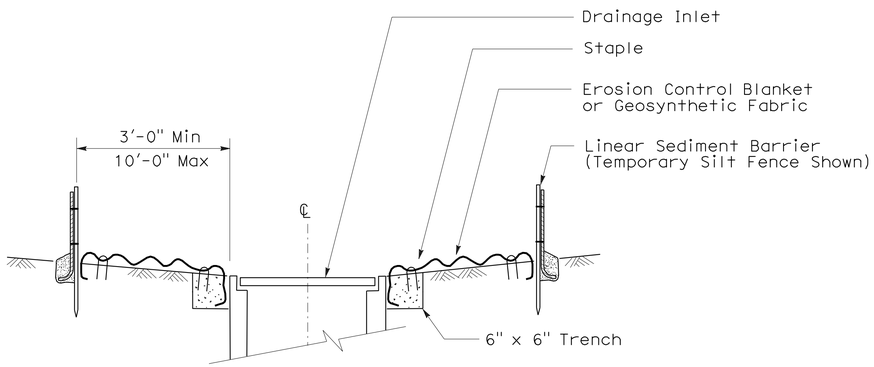

SECTION A-A

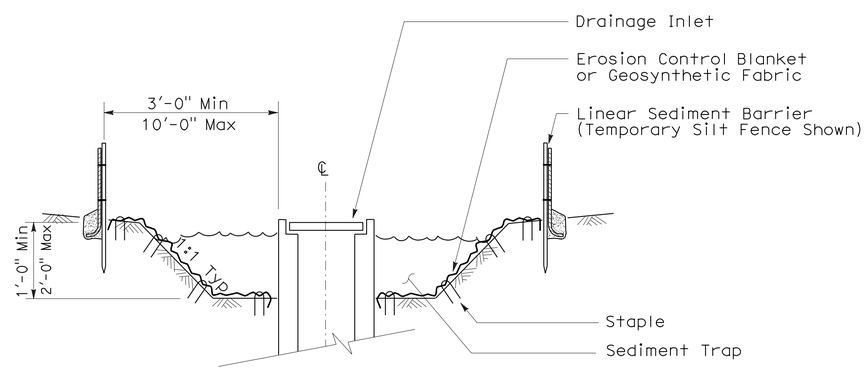

SECTION B-B

NOTES:

1. See Standard Plan T51 for Temporary Silt Fence.
2. Dimensions may vary to fit field conditions.

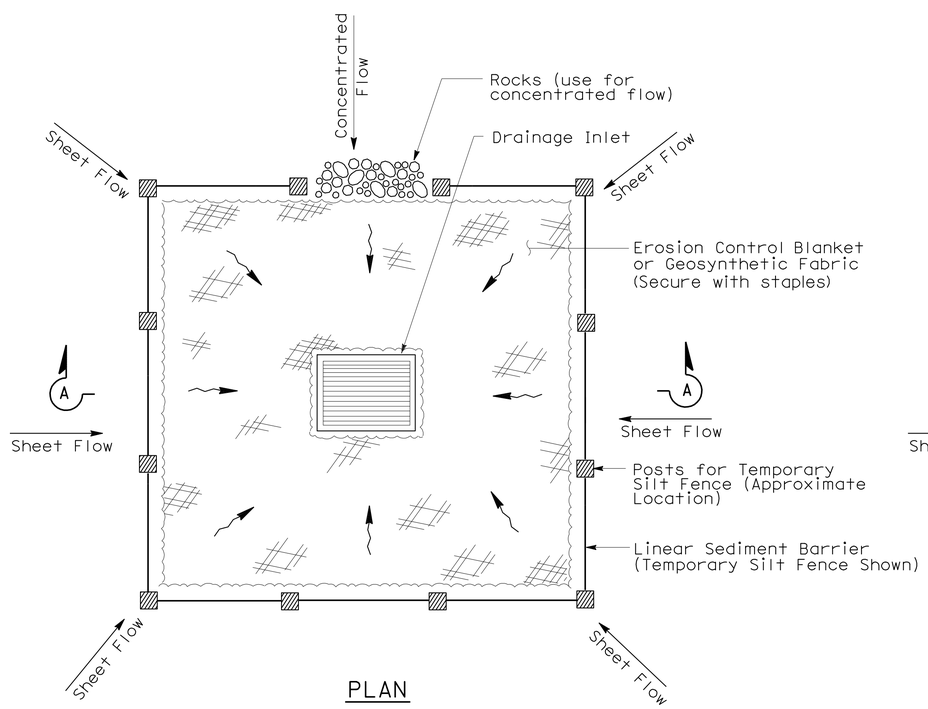

PLAN

TEMPORARY DRAINAGE INLET PROTECTION (TYPE 1)

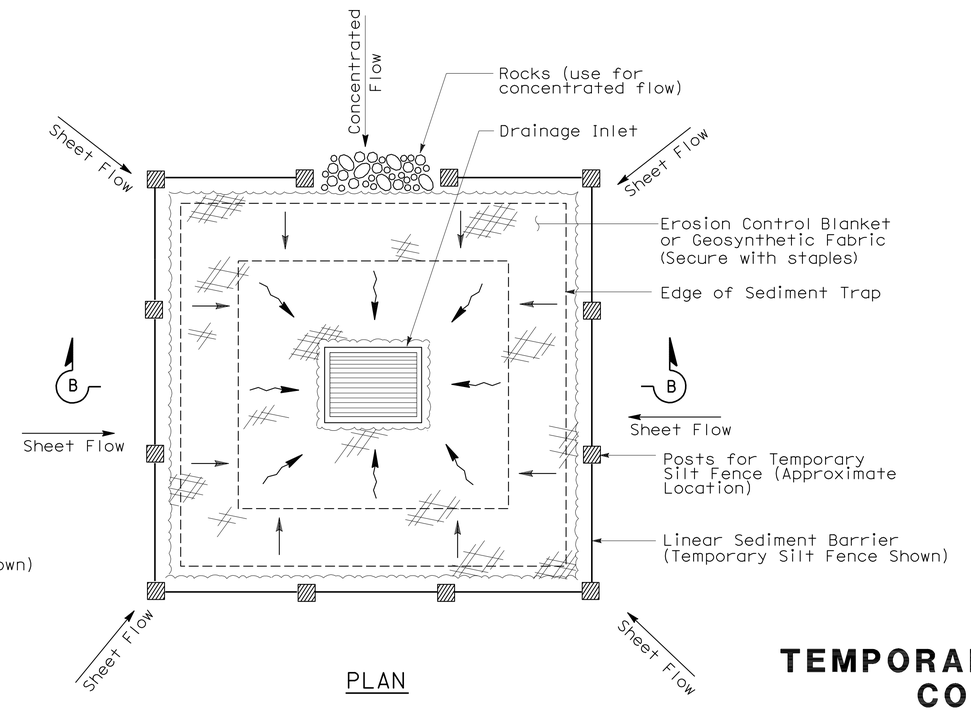

PLAN

TEMPORARY DRAINAGE INLET PROTECTION (TYPE 2) (EXCAVATED SEDIMENT TRAP)

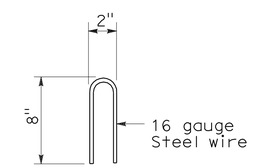

STAPLE DETAIL

STATE OF CALIFORNIA
DEPARTMENT OF TRANSPORTATION

TEMPORARY WATER POLLUTION CONTROL DETAILS (TEMPORARY DRAINAGE INLET PROTECTION)

NO SCALE

NSP T61 DATED AUGUST 15, 2008 SUPPLEMENTS
THE STANDARD PLANS BOOK DATED MAY 2006.

NEW STANDARD PLAN NSP T61

2006 NEW STANDARD PLAN NSP T61

7-11-08

DIST	COUNTY	ROUTE	POST MILES TOTAL PROJECT	SHEET NO.	TOTAL SHEETS
05	Mon	101	R10.8/R12.6	36	38

LICENSED LANDSCAPE ARCHITECT

August 15, 2008
PLANS APPROVAL DATE

LICENSED LANDSCAPE ARCHITECT — Robert B. Schott — Signature — 11-04-08 Renewal Date — 08-11-08 Date — STATE OF CALIFORNIA

The State of California or its officers or agents shall not be responsible for the accuracy or completeness of electronic copies of this plan sheet.

To accompany plans dated 9-20-10

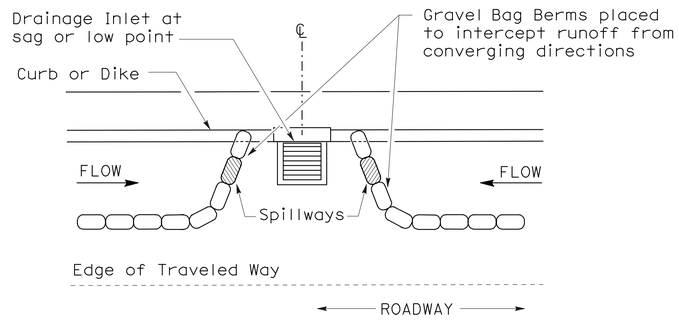

PLAN

CONFIGURATION FOR SAG POINT INLET (GRAVEL BAG BERM)

GRAVEL BAG BERM (TYPE 3A) SPACING TABLE

SLOPE OF ROADWAY (PERCENT)	1 to 3.9	4 to 5.9	6 to 7.9	8 to 10	10+
INTERVAL BETWEEN BERM	100′	75′	50′	25′	12′

For slope of less than 1%, install barriers only if erosion/sediment is prevalent

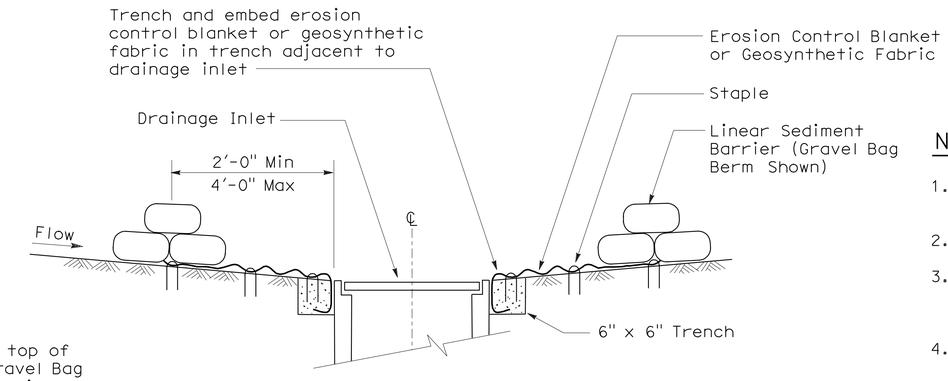

SECTION A-A

NOTES:

1. Place safety cones adjacent to drainage inlet protection.
2. Dimensions may vary to fit field conditions.
3. Install a minimum of 3 gravel bag berms upstream of each drainage inlet to be protected.
4. Position erosion control blanket or geosynthetic fabric at edge of concrete apron and secure in trench.
5. Erosion control blanket or geosynthetic fabric is not required if the area adjacent to the drainage inlet is vegetated or paved.

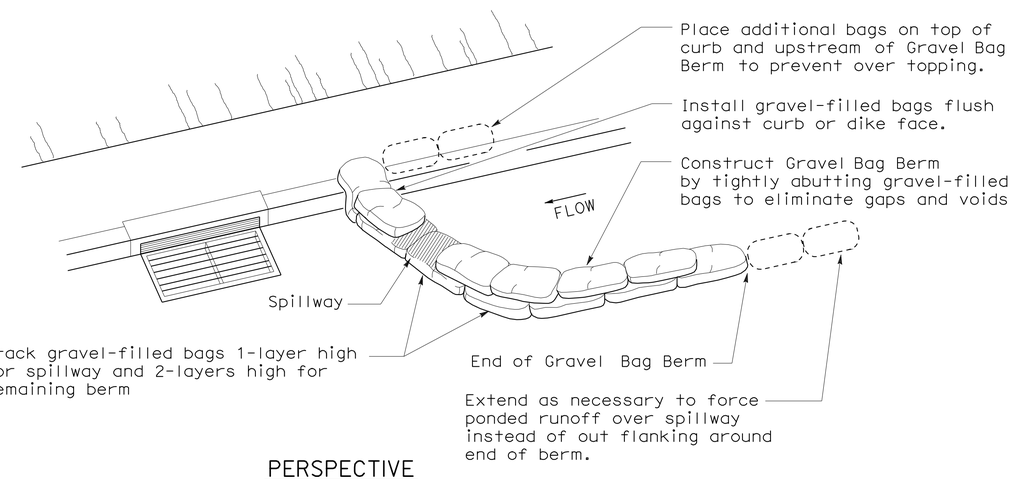

PERSPECTIVE

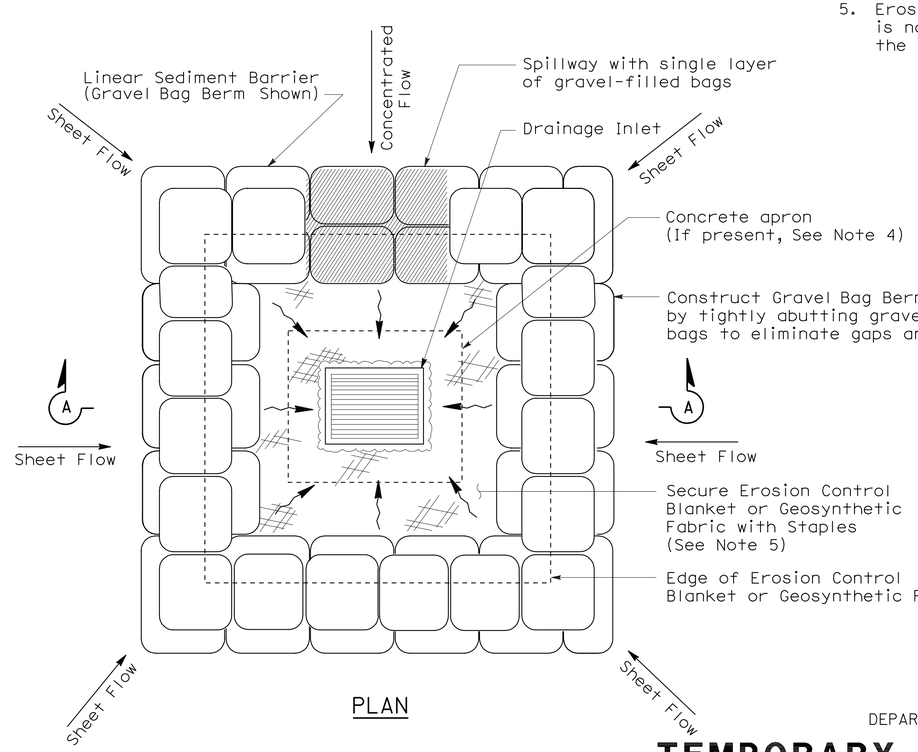

PLAN

TEMPORARY DRAINAGE INLET PROTECTION (TYPE 3B)

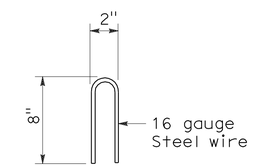

STAPLE DETAIL

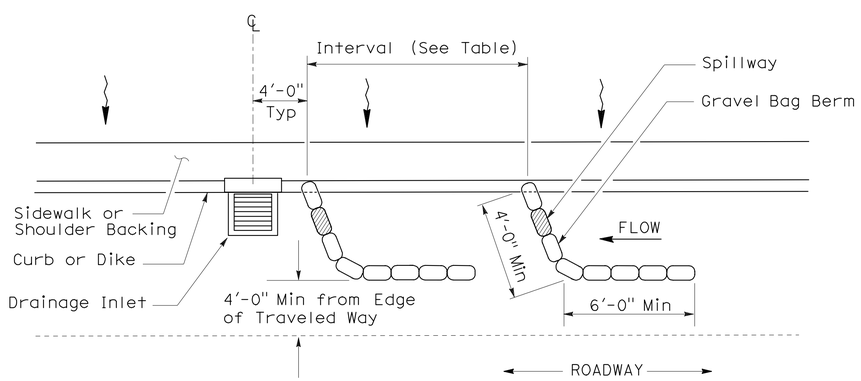

PLAN

TEMPORARY DRAINAGE INLET PROTECTION (TYPE 3A) (GRAVEL BAG BERM)

STATE OF CALIFORNIA
DEPARTMENT OF TRANSPORTATION

TEMPORARY WATER POLLUTION CONTROL DETAILS (TEMPORARY DRAINAGE INLET PROTECTION)

NO SCALE

NSP T62 DATED AUGUST 15, 2008 SUPPLEMENTS THE STANDARD PLANS BOOK DATED MAY 2006.

NEW STANDARD PLAN NSP T62

2006 NEW STANDARD PLAN NSP T62

7-11-08

DIST	COUNTY	ROUTE	POST MILES TOTAL PROJECT	SHEET NO.	TOTAL SHEETS
05	Mon	101	R10.8/R12.6	37	38

Robert B Schott
LICENSED LANDSCAPE ARCHITECT

August 15, 2008
PLANS APPROVAL DATE

LICENSED LANDSCAPE ARCHITECT Robert B. Schott 3025 Signature 11-04-08 Renewal Date 08-11-08 Date STATE OF CALIFORNIA

The State of California or its officers or agents shall not be responsible for the accuracy or completeness of electronic copies of this plan sheet.

To accompany plans dated 9-20-10

FLEXIBLE SEDIMENT BARRIER SPACING TABLE

SLOPE OF ROADWAY (PERCENT)	0 to 0.9	1 to 1.9	2 to 2.9	3 to 4	5+
INTERVAL BETWEEN BARRIERS	50′	35′	30′	25′	20′
ANGLE FROM FACE OF CURB	70°	70°	70°	45°	45°
SUGGESTED BARRIER LENGTH	6′	6′	6′	6′	6′

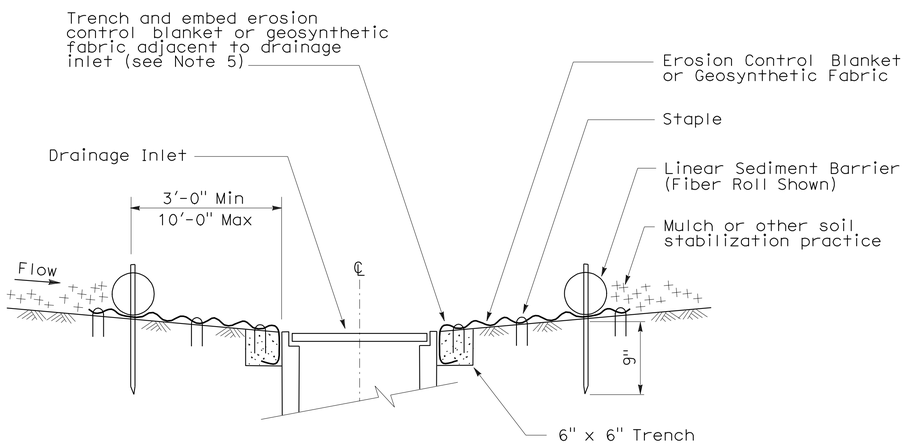

SECTION A-A

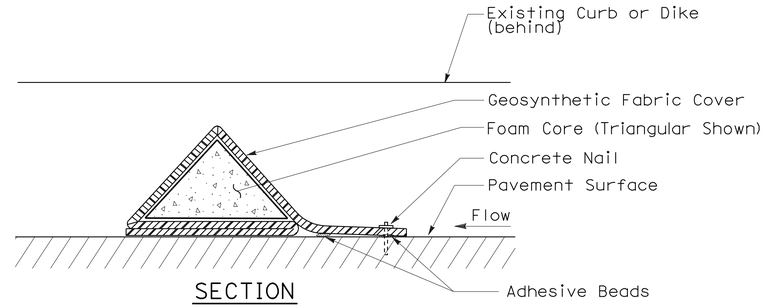

SECTION

FLEXIBLE SEDIMENT BARRIER DETAIL (FOAM BARRIER SHOWN)

NOTES:

1. See Standard Plan T51 for Temporary Silt Fence.
2. Dimensions may vary to fit field conditions.
3. Install a minimum of 3 flexible sediment barriers upstream of each drainage inlet to be protected.
4. Position erosion control blanket or geosynthetic fabric at edge of concrete apron and secure in trench.
5. Erosion control blanket or geosynthetic fabric is not required if the area adjacent to the drainage inlet is vegetated.

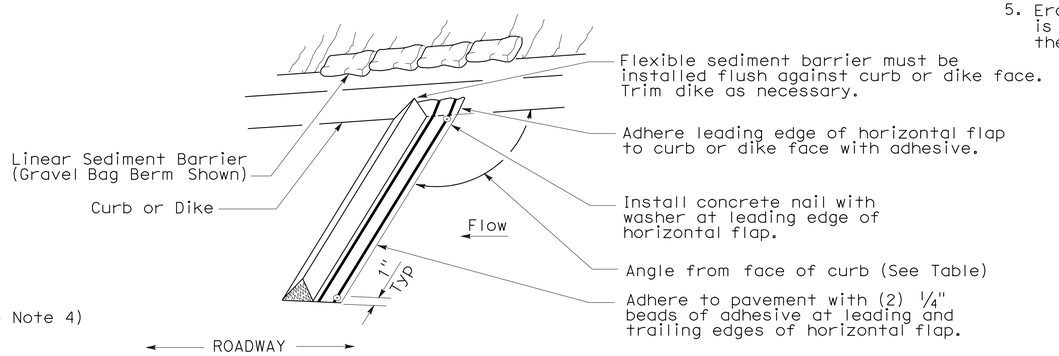

PERSPECTIVE

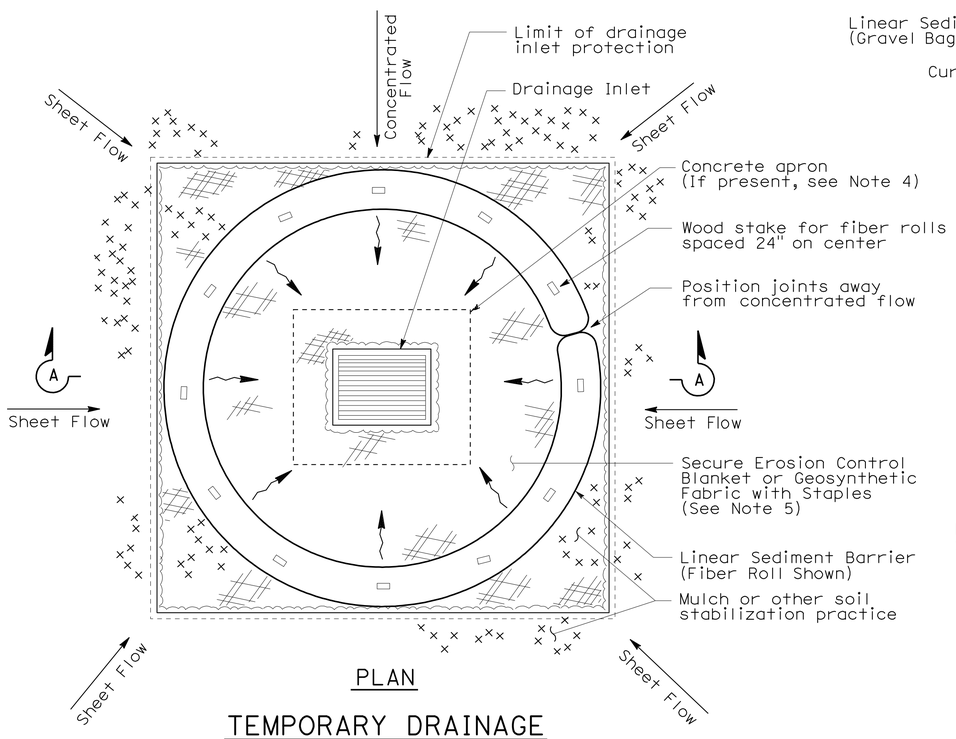

PLAN

TEMPORARY DRAINAGE INLET PROTECTION (TYPE 4A)

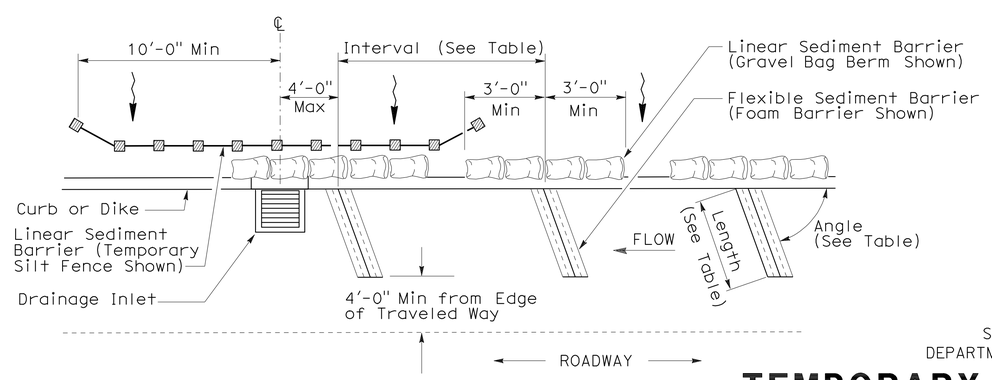

PLAN

TEMPORARY DRAINAGE INLET PROTECTION (TYPE 4B) FLEXIBLE SEDIMENT BARRIER

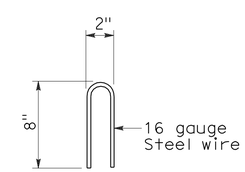

STAPLE DETAIL

STATE OF CALIFORNIA
DEPARTMENT OF TRANSPORTATION

TEMPORARY WATER POLLUTION CONTROL DETAILS (TEMPORARY DRAINAGE INLET PROTECTION)

NO SCALE

NSP T63 DATED AUGUST 15, 2008 SUPPLEMENTS THE STANDARD PLANS BOOK DATED MAY 2006.

NEW STANDARD PLAN NSP T63

2006 NEW STANDARD PLAN NSP T63

7-11-08

DIST	COUNTY	ROUTE	POST MILES TOTAL PROJECT	SHEET NO.	TOTAL SHEETS
05	Mon	101	R10.8/R12.6	38	38

Robert B Schott
LICENSED LANDSCAPE ARCHITECT

August 15, 2008
PLANS APPROVAL DATE

LICENSED LANDSCAPE ARCHITECT
Robert B. Schott 3695
Robert B Schott
Signature
11-04-08
Renewal Date
08-11-08
Date
STATE OF CALIFORNIA

The State of California or its officers or agents shall not be responsible for the accuracy or completeness of electronic copies of this plan sheet.

To accompany plans dated 9-20-10

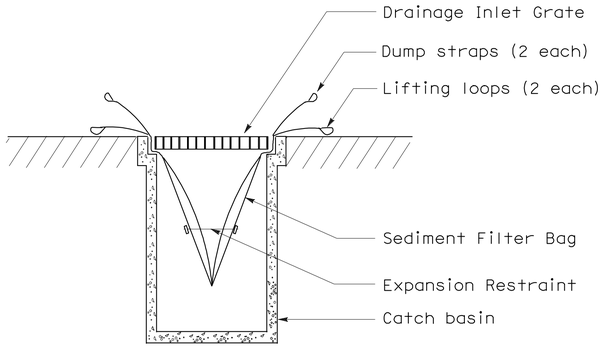

SECTION B-B

SEDIMENT FILTER BAG DETAIL

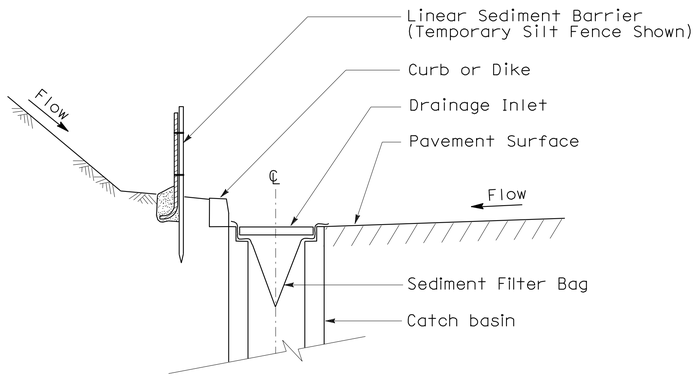

SECTION A-A

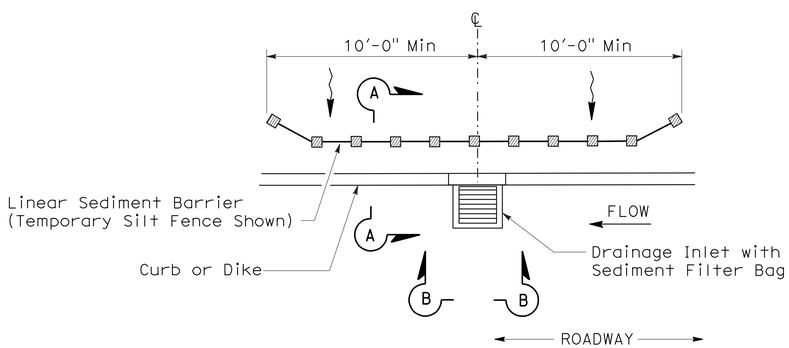

PLAN

TEMPORARY DRAINAGE INLET PROTECTION (TYPE 5) (SEDIMENT FILTER BAG)

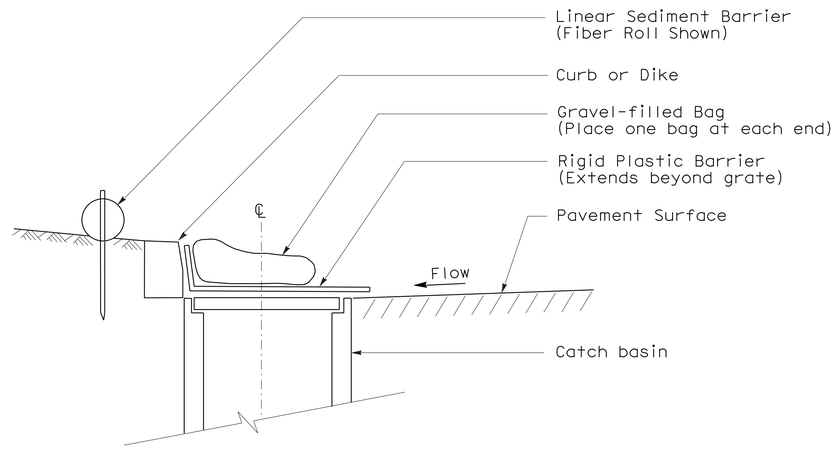

SECTION

TEMPORARY DRAINAGE INLET PROTECTION (TYPE 6A) (CATCH BASIN WITH GRATE)

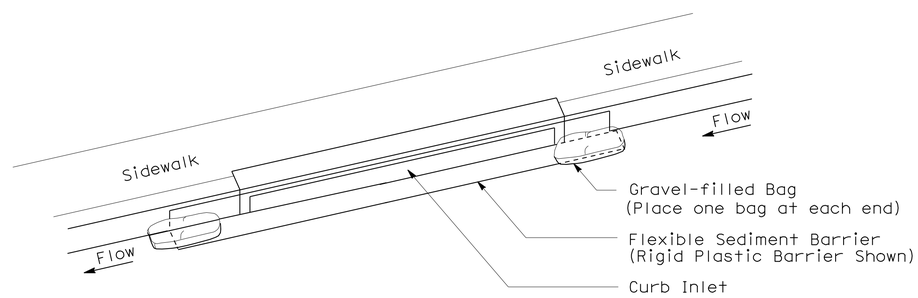

PERSPECTIVE

TEMPORARY DRAINAGE INLET PROTECTION (TYPE 6B) (CURB INLET WITHOUT GRATE)

NOTES:

1. See Standard Plan T51 for Temporary Silt Fence.
2. Dimensions may vary to fit field conditions.

STATE OF CALIFORNIA
DEPARTMENT OF TRANSPORTATION

TEMPORARY WATER POLLUTION CONTROL DETAILS (TEMPORARY DRAINAGE INLET PROTECTION)

NO SCALE

NSP T64 DATED AUGUST 15, 2008 SUPPLEMENTS
THE STANDARD PLANS BOOK DATED MAY 2006.

NEW STANDARD PLAN NSP T64

2006 NEW STANDARD PLAN NSP T64

7-11-08