FOR CONTRACT NO.: 05-0Q6304
05-SLO-101-36.0/37.5
PROJECT ID : 0500000320

INFORMATION HANDOUT

MATERIALS INFORMATION

ALTERNATIVE CRASH CUSHION SYSTEMS

CRASH CUSHION
(TYPE QUADGUARD II)

QuadGuard®II System

The New Standard In Crash Cushions...
NCHRP 350, TL-3!

Product Manual

ENERGY ABSORPTION
SYSTEMS, INC.
A Quixote Company
Saving Lives By Design

Corporate Offices:
35 East Wacker Dr., 11th Floor
Chicago, IL 60601-2076
Telephone: (312) 467-6750
FAX: (312) 467-1356
http://www.energyabsorption.com/

Engineering and Manufacturing Facilities:
Rocklin, CA
Pell City, AL

QuadGuard® II System

Table of Contents

Important Introductory Notes 2
System Overview 2
QuadGuard® II System General Specifications 4
QuadGuard® II CZ System General Specifications 6
QuadGuard II System Design Criteria 8
QuadGuard II cz Design Criteria 11
QuadGuard II cz Foundation Specifications.... 12
General Installation Information..... 13
Required Tools 13
Transitioning 14
Site Preparation 16
General Maintenance and Repair..... 16
Limitations and Warnings..... 17
Standard Cover Drawings 18
Standard Detail Drawings 23

Note: This manual and the standard drawings with their reference drawings in PDF format are also contained on the CD included on the inside back cover of this manual.

Important Introductory Notes

Proper installation of the QuadGuard II System is essential to assure maximum performance. Take the time to review the installation instructions and product limitations thoroughly before performing the necessary work. Do not attempt to install any crash cushion without the proper plans and installation manual from the manufacturer.

Note: The drawing package provided with the QuadGuard II System should take precedence over the drawing package provided in this manual. These drawings are for reference only and may not be up to date.

If you need additional information, or have questions about the QuadGuard II System, please call Energy Absorption Systems' **Customer Service Department at (888) 323-6374.**

System Overview

The QuadGuard II System is a highly efficient, redirective, non-gating crash cushion for hazards ranging in width from 610 mm to 3200 mm (2' to 10.5'). It consists of crushable, energy-absorbing cartridges surrounded by a framework of Quad-Beam™ panels.

The QuadGuard II System utilizes two types of cartridges in a "staged" configuration to address both lighter cars and heavier, high center-of-gravity vehicles. Its modular design allows the system length to be tailored to the design speed of a site. Refer to **Table A on page 9** to determine the appropriate length system for a given design speed.

How to Determine Left/Right

To determine left from right when ordering parts, stand in front of the system facing the hazard as shown in **Figure 1**. Your left is the system's left and your right is the system's right.

Counting the Number of Bays

One bay consists of one cartridge, one diaphragm, and two fender panels. The nose section is not considered a bay, though there is a cartridge in the nose of each system. Note that this means there will always be one more cartridge in the system than the number of bays in the system. To determine number of bays, count fender panels on one side, see **Figure 1** (5 bay System shown).

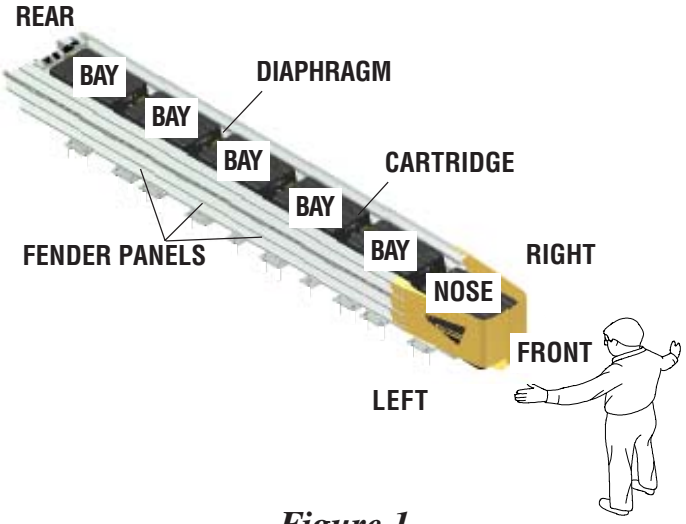

Figure 1
System Orientation

For Customer Service Call
1-888-32-ENERG

System Overview (cont'd.)

Measuring the Width

The QuadGuard II System is available in seven nominal widths:

- 610 mm [24"]
- 760 mm [30"]
- 915 mm [36"]
- 1219 mm [48"]
- 1755 mm [69"]
- 2285 mm [90"]
- 3200 mm [126"] Min. 6 Bays required for this width.

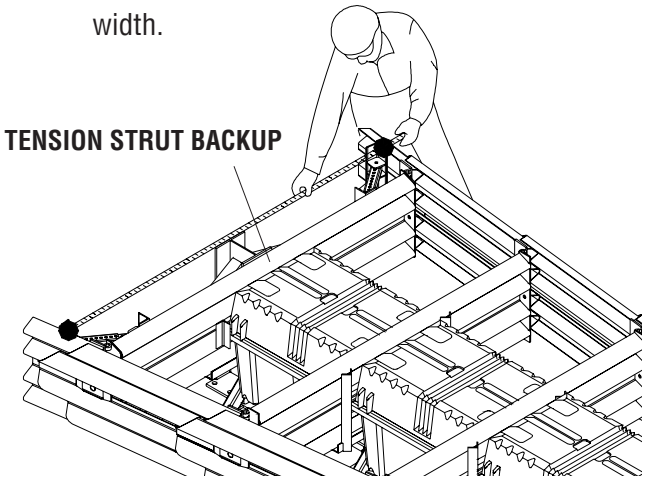

Figure 2
Width of System with Tension Strut Backup

The nominal width of a system with **tension strut backup** is the width between side panels behind the backup (see **Figure 2**).

The nominal width of a system with **concrete backup** is the width of the concrete backup at location shown in **Figure 3**.

The outside width of the system is approximately 150 mm [6"] to 230 mm [9"] wider than the nominal width. The width of the system is not the same as the width of the backup.

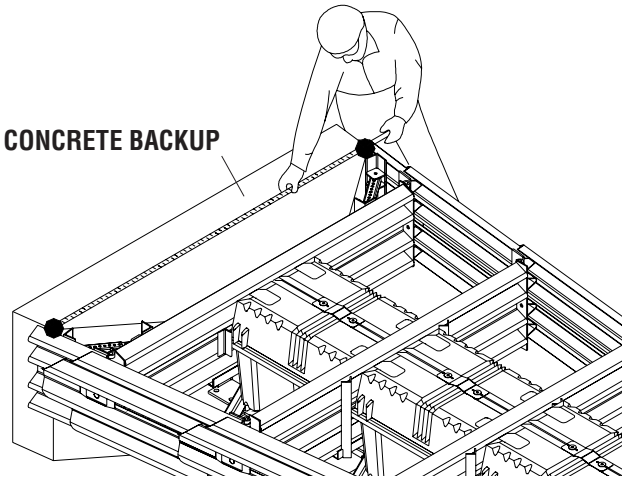

Figure 3
Width of System with Concrete Backup

Return Goods Policy

Before returning any goods for credit please contact Energy Absorption Systems Inc. Customer Service Department at 1-888-323-6374 or your local distributor for proper instructions.

Crash Performance

The 5 bay QuadGuard II System has successfully passed the NCHRP 350, Test Level 3 tests with both the light car and pickup truck at speeds up to 100 km/h (62 mph) at angles up to 20 degrees.

During head-on impacts, the QuadGuard II System telescopes rearward and crushes to absorb the energy of impact. When impacted from the side, it safely redirects the vehicle back toward its original travel path and away from the hazard.

QuadGuard® II System
General Specifications

I. GENERAL

All QuadGuard II Systems are designed and manufactured by Energy Absorption Systems, Incorporated, of Chicago, Illinois.

II. DESCRIPTION OF SYSTEM

A. General

The QuadGuard II System consists of energy absorbing cartridges surrounded by a framework of steel Quad-beam guardrail, which can telescope rearward during head-on impacts. The QuadGuard II System has a center monorail, which will resist lateral movement during side angle impacts, and a backup, which will resist movement during head-on impacts. The nose consists of a steel nose wrap and an energy-absorbing cartridge. Transitions are available and may be required depending on site conditions.

B. Component Descriptions

1. A bay describes a section of the QuadGuard II System consisting of an energy absorbing cartridge, a diaphragm, two fender panels and fasteners.

   a. There are two types of cartridges, referred to as Type I and Type II. The front portion of the system is fitted with Type I cartridges. The rear of the system is fitted with Type II cartridges. The outside of each cartridge is fabricated from a weather resistant plastic. The actual quantity of each is determined by the system design speed.

   b. The diaphragms are made from 10 gauge, steel Quad-Beam sections. Two support legs are welded to the Quad-Beam. Ski-shaped plates are welded to the bottom of the support legs. The diaphragms are designed to lock onto, and be guided by a ground-mounted, center monorail support structure.(The 24”, 30”, 36 and 48” wide systems require the use of monorail stabilizer plates bolted between the diaphragm and rail guide.

   c. The fender panels are fabricated from 10 gauge steel Quad-Beam sections. The rear of each fender panel (the panel end furthest from the nose of the assembled system) is tapered to help maximize performance during wrong-way, redirective impacts. Each fender panel is drilled and slotted in accordance with the manufacturer's specifications so that when assembled in the field, the front end (the end closest to the nose of the assembled system) is bolted to a diaphragm or hinge plate (depending on width of system) by means of 5/8" bolts. The rear of each Quad-beam fender panel overlaps the next rearward fender panel and is connected to the diaphragm or hinge plate of the next bay by means of a bolt and "mushroom" washer. The bolt fits through the long horizontal slot in the forward fender panel. This permits the movement, front to back, of one set of fender panels relative to the panels in the underlying, next rearward bay. For QuadGuard II Systems, the mushroom bolt assembly is held in place by a compression spring, which allows limited separation of the fender panels during an impact.

2. The monorail support structure is made of steel and is to be anchored per manufacturer's instructions, to a specified concrete pad. The monorail prevents lateral movement, vertical movement and overturning of the diaphragms during design impacts.
3. The nose section contains a nose cover and an energy absorbing cartridge and is not counted as a bay. The nose cover is made from 14 ga. steel, powder-coated to resist weathering. The nose attaches to the front diaphragm. Standard color is yellow.
4. The backup is made of steel and is attached to concrete or an integral tension strut framework, and is available in nominal widths of 610 mm [24"], 762 mm [30"], 915 mm [36"], 1219 mm [48"], 1753mm [69"], 2286mm [90"] and 3200 mm []126"].
5. Several transition panels are available as required by site conditions including: Quad-Beam to Safety Barrier, Quad-Beam to Thrie-Beam, Quad-Beam to W-Beam, and Quad-Beam End Shoe. Contact Energy Absorption Systems, Inc. for specific applications.

C. Material Specifications

1. Metal work is fabricated from either M1020 Merchant Quality or ASTM A-36 steel. After fabrication, metal work is galvanized in accordance with ASTM A-123. All welding is done by or under the direction of a certified welder.
2. The system is assembled with galvanized fasteners. All bolts, nuts, and washers are Commercial Quality "American National Standard" unless otherwise specified.

III. PERFORMANCE CRITERIA

A. For head-on impacts into the nose, a QuadGuard® II System shall be specified which is capable of meeting the occupant risk criteria as recommended in NCHRP 350. For vehicles weighing between 820 and 2000 kg [1,810 and 4,410 lbs], the theoretical impact velocity of a hypothetical front seat passenger against the vehicle's interior (calculated from vehicle acceleration and 600mm [24"] forward displacement) shall be less than 12m/s [39.4 ft/sec], and the vehicle's highest 10 millisecond average acceleration subsequent to the instant of the hypothetical passenger impact shall be less than 20 G's.

B. The QuadGuard II System is capable of redirecting 2000 kg [4,410 lbs] vehicles which impact the sides of the system at speeds up to 100 km/h [62 mph] at angles of 20° (angles measured from system's longitudinal centerline). The QuadGuard II System is capable of redirecting 820 kg [1,810 lbs] vehicles, which impact the sides of the system at speeds up to 100 km/h [62 mph] at angles of 15°. (See Test Criteria below.)

C. The QuadGuard II System is designed and constructed so there is no solid debris from the system which can create a hazard on the roadway after either head-on or side angle design impacts.

IV. TEST CRITERIA

The QuadGuard System has been fully tested per the recommended criteria set forth in National Cooperative Highway Research Program (NCHRP) Report 350, 1993, Test Level 3 for redirective, non-gating terminals and crash cushions.

V. DESIGN AND SELECTION CRITERIA

A. Design, selection and placement of crash cushions shall conform to The American Association of State Highway and Transportation Officials (AASHTO) Publication, "Roadside Design Guide" 2002.

B. Installation of the QuadGuard II System attenuators shall be accomplished in accordance with the recommendations of Energy Absorption Systems, Incorporated.

QuadGuard® II System

QuadGuard® II CZ System

General Specifications

I. GENERAL

All QuadGuard II CZ Systems are designed and manufactured by Energy Absorption Systems, Incorporated, of Chicago, Illinois.

II. DESCRIPTION OF SYSTEM

A. General

The QuadGuard II CZ System consists of energy absorbing cartridges surrounded by a framework of steel Quad-beam® guardrail which can telescope rearward during head-on impacts. The QuadGuard II CZ System has a center monorail which will resist lateral movement during side angle impacts and a backup which will resist movement during head-on impacts. The nose consists of a steel nose wrap and an energy-absorbing cartridge. Transitions are available and may be required depending on site conditions.

The QuadGuard II CZ System is available in 3 to 9 bay lengths and nominal widths of 610 mm [24"], 762 mm [30"], 915 mm [36"] and 1219 mm [48”].

B. Component Descriptions

1. A bay describes a section of the QuadGuard II CZ System consisting of an energy absorbing cartridge, a diaphragm, two fender panels and fasteners.

   a. There are two types of cartridges, referred to as Type I and Type II. The front portion of the system is fitted with Type I cartridges. The rear of the system is fitted with Type II cartridges. The outside of each cartridge is fabricated from a weather resistant plastic. The actual quantity of each is determined by the system design speed.

   b. The diaphragms are made from 10 gauge, steel Quad-beam sections. Two support legs are welded to the Quad-beam. Ski-shaped plates are welded to the bottom of the support legs. The diaphragms are designed to lock onto and be guided by a ground-mounted, center monorail support structure.

   c. The fender panels are fabricated from 10 gauge steel Quad-beam sections. The rear of each fender panel (the panel end furthest from the nose of the assembled system) is tapered to help maximize performance during wrong-way, redirective impacts. Each fender panel is drilled and slotted in accordance with the manufacturer's specifications so that when assembled in the field, the front end (the end closest to the nose of the assembled system) is bolted to a diaphragm by means of 5/8" bolts. The rear of each Quad-beam fender panel shall overlap the next rearward fender panel and be connected to the diaphragm of the next bay by means of a bolt and "mushroom" washer. The bolt fits through the long horizontal slot in the forward fender panel. This permits the front to back movement, of one set of fender panels relative to the panels in the underlying, next rearward bay.

2. The nose section shall contain a nose cover and an energy-absorbing cartridge and is not counted as a bay. The nose cover is made from 14 ga. steel, powdercoated to resist weathering. The nose shall attach to the front diaphragm. Standard color is yellow.

3. The monorail support structure is made of steel and be anchored per manufacturer's instructions, to specified concrete pad or asphalt roadway. The monorail shall prevent lateral movement, vertical movement and overturning of the diaphragms during design impacts.

4. The backup is made of steel and be attached to an integral tension strut framework, and is available in nominal widths of 610 mm[24"], 760 mm[30"], 915 mm[36"] and 1219 mm [48”].

5. Optional Plate - The monorail backup section and the monorail extension section are available welded to steel plate sections. The plates shall be anchored per manufacturer's instructions, to a specified concrete pad or asphalt roadway.

For Customer Service Call
1-888-32-ENERG

QuadGuard® II CZ System
General Specifications (cont'd.)

a. The monorail backup section is 3 bays long on a 10mm x 1.07m x 4.16m [3/8" x 3'6" x 13'7-5/8"] plate. The backup and monorail are welded to the plate. The backup monorail section is available in normal widths of 610 mm [24"], 760 mm [30"], 915 mm [36"] and 1219 mm [48"].

b. The monorail extension section is 3 bays long and can be added as required to the monorail backup section to make 4 to 9 bays systems. The plate of a monorail extension section is 10mm x 1.07m x 2.74m [3/8" x 3'6" x 9']. The monorail extension sections shall prevent lateral movement, vertical movement and overturning of the diaphragms during design impacts.

6. Several transition panels are available as required by site conditions including; Quad-beam to Safety Barrier, Quad-beam to Thrie-beam, Quad-beam to W-beam, and Quad-beam End Shoe. Transitions may be necessary to minimize potential vehicle snag conditions. Contact Energy Absorption Systems, Inc. for specific applications.

C. Material Specifications

1. Metal work is fabricated from either M1020 Merchant Quality or ASTM A-36 steel. After fabrication, metal work is galvanized in accordance with ASTM A-123. All welding is done by or under the direction of a certified welder.

2. The system is assembled with galvanized fasteners. All bolts, nuts, and washers are Commercial Quality "American National Standard" unless otherwise specified.

III. PERFORMANCE CRITERIA

A. The QuadGuard II CZ System is capable of redirecting 820 to 2000 kg [1,810 to 4,410 lbs] vehicles which impact the sides of the system at speeds up to 100 km/h [62 mph] at angles of 20 degrees for both right-way and wrong-way impacts (angles measured from system's longitudinal centerline). (See Test Criteria below.)

B. For head-on impacts into the nose, a QuadGuard II CZ is capable of meeting the occupant risk criteria as recommended in NCHRP 350. For vehicles weighing between 820 and 2000 kg [1,810 and 4,410 lbs], the theoretical impact velocity of a hypothetical front seat passenger against the vehicle's interior (calculated from vehicle acceleration and 610mm [24"] forward displacement) shall be less than 12m/s [39.4 ft/sec]. The vehicle's highest 10 millisecond average acceleration subsequent to the instant of the hypothetical passenger impact shall be less than 20 G's.

C. The QuadGuard II CZ System is designed and constructed so there is no solid debris from the system which can create a hazard on the roadway after either head-on or side angle design impacts.

IV. TEST CRITERIA

The five bay QuadGuard II CZ System has been tested per the recommended criteria set forth in National Cooperative Highway Research Program (NCHRP) Report 350, 1993, Test Level 3 for redirective, non-gating terminals and crash cushions.

V. DESIGN AND SELECTION CRITERIA

A. Design, selection and placement of crash cushions shall conform to The American Association of State Highway and Transportation Officials (AASHTO) Publication, "Roadside Design Guide" 2002.

B. Installation of the QuadGuard II CZ System attenuators shall be accomplished in accordance with the recommendations of Energy Absorption Systems, Incorporated.

QuadGuard II System Design Criteria

Establish Basic System Specifications

The specification of a QuadGuard II System for a particular site must always include system width and system length.

1) Specification of System Width

The QuadGuard II System is available in five nominal widths:

- 610 mm [24"]
- 760 mm [30"]
- 915 mm [36"]
- 1019 mm [48"]
- 1755 mm [69"]
- 2285 mm [90"]
- 3200 mm [126"] Min. 6 Bays required for width

As a general rule, selection of the narrowest width that adequately shields the hazard is recommended.

2) Specification of System Length

System length is specified by the number of bays the system includes. The number of bays required is a function of the design speed of the roadway.

Choose a Backup Structure for the system

Two backup designs are available. The Tension Strut backup and the concrete backup. Both types are appropriate for use on grade or deck.

Special Site Conditions

Contact Energy Absorption Systems Customer Service Department if you would like assistance with your application. You will need to answer the following questions:

1. **Are curbs, islands or elevated objects (delineators or signs) present at the site? What height and width are they?** All curbs and elevated objects over 100 mm [4"] high should be removed. If possible, curbs under 100 mm [4"] high should be removed approximately 15 m [50'] in front of the QuadGuard® System, and as far back as the system's backup. Any curbs that must remain should be 100 mm [4"] maximum and be mountable.
2. If the installation site is a gore area, (place where two roads diverge), **what is the angle of divergence?**
3. **What is the general geometry of the site**, including the roadway for 150 m [500'] in front, so traffic patterns can be visualized?
4. **Is there an existing barrier?** When there is an existing guardrail or median barrier at the site, the backup of the QuadGuard II System should tie into it when possible.
5. **Will there be traffic approaching from the rear of the system?** Is the system in a two-way traffic situation, with traffic going in opposite directions on either side of the system? Or, is the system on the side of the road in a location where cross over traffic is a concern? If so, a Transition from the back of the system to the hazard is necessary to prevent vehicle snagging (**see Page 15**).
6. **Are there any other unique features at the site that may affect positioning or performance of the QuadGuard II System?** (See next section).

Other Factors That May Affect Your Design:

1. The existence of drain inlets.
2. Junction boxes or other appurtenances located near the hazard.
3. Insufficient space for the length preferred.
4. The location and movement of expansion joints.

If these or any other special site conditions exist, please contact Energy Absorption Systems Customer Services Department before proceeding with your design. **For Customer Service call: 1-888-323-6374.**

QuadGuard® II System

QuadGuard II System Design Criteria (cont'd.)

This chart represents the modified versions of the QG II length relative to impact speed, and is based on the capacity of the system using a 2000 kg [4400 lb] Pickup truck.

# of Bays	Model #	Vehicle Speed kph [mph]	TYPE I Cartridge Qty.	TYPE II Cartridge Qty.
1*	QG240 _ _	40 [25]	2	0
2	QG270_ _	70 [44]	2	1
3*	QG280_ _	80 [50]	2	2
4*	QG290_ _	90 [56]	3	2
5	QG2100_ _	100 [62]	3	3
6*	QG2105_ _	105 [65]	4	3
7*	QG2110_ _	110 [68]	4	4
8*	QG2115_ _	115 [71]	4	5
9*	QG2120_ _	120 [75]	4	6

Table A - Speed Chart For Narrow Systems

# of Bays	Model #	Vehicle Speed kph [mph]	TYPE I Cartridge Qty.	TYPE II Cartridge Qty.
1				
2				
3*	QG270_ _	70 [44]	2	2
4*	QG280_ _	80 [50]	3	2
5	QG2100_ _	100 [62]	3	3
6*	QG2105_ _	105 [65]	4	3
7*	QG2110_ _	110 [68]	4	4
8*	QG2115_ _	115 [71]	4	5
9*	QG2120_ _	120 [75]	4	6

Table B - Speed Chart For Wide Systems

*System capacity estimated through calculation.

Impact conditions which differ from thoise described in the NCHRP 350 test matrix for non-gating, redirecting crash cushions may result in different crash results than those encountered in testing.

Furthermore, impacts in excess of TL-3 impact severity, or the existence (at the site of the installation) of curbs or cross slopes in excess of 8%, may yield crash performance which does not meet NCHRP 350 evaluation criteria relative to structural adequacy, occupant risk and vehicle trajectory factors.

Model Number Description

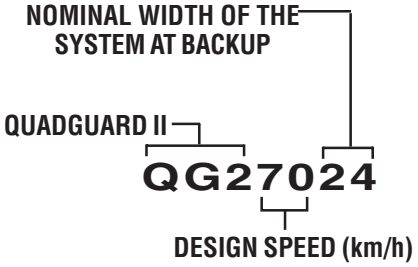

Figure 4
Model Number Key

QuadGuard® II System

QuadGuard System Design Criteria (cont'd.)

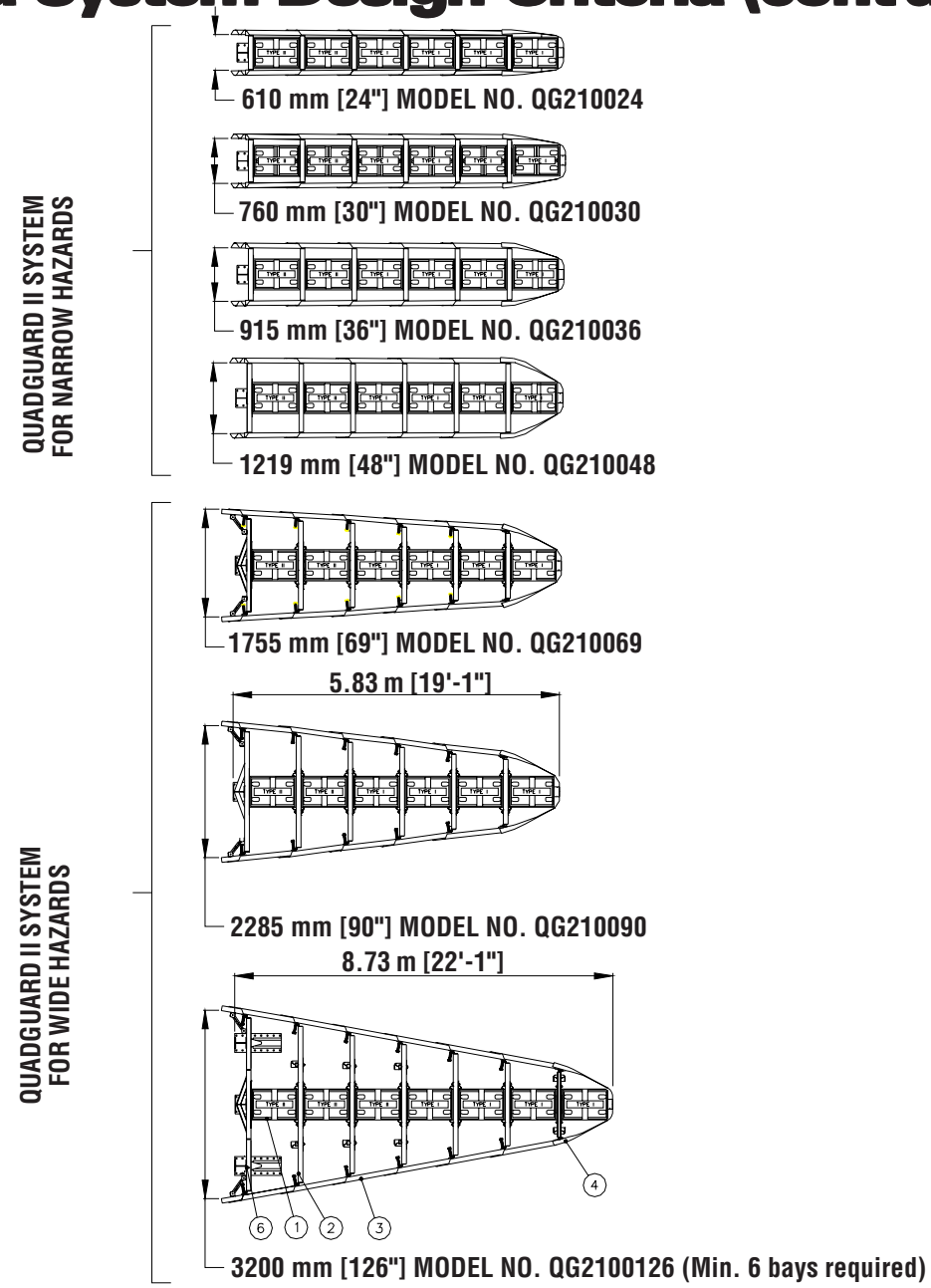

Key

1. Cartridge
2. Diaphragm
3. Quad Beam Fender Panel
4. Nose Cover
5. Monorail
6. Backup

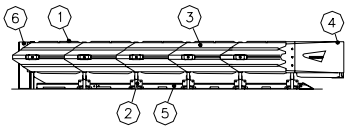

Plan & Elevation (Five bay System with Tension Strut backup Shown)

Figure 5

QuadGuard II cz Design Criteria

The portable compact crash cushion for construction zones. The QuadGuard II cz is available in the same narrow sizes as permanent systems.

A wise choice...

because the Construction Zone QuadGuard (QuadGuard II cz) provides the same lifesaving efficiency and features of the permanent QuadGuard II System. The QuadGuard II cz is designed to redirect vehicles hitting the system along the side. After a typical design speed head on impact the majority of the system can be used again. The system can usually be repaired by pulling it back into place and replacing the Nose and Cartridges. (Depending on the foundation a QuadGuard II cz may need to be reset after impact.)

because the QuadGuard II cz is easy to transport. The system can be pre-assembled away from the job site. When the need arises, the QuadGuard II cz, can be positioned at the impact site with the aid of a 2 ton lifting device.

because installation of the QuadGuard II cz usually requires little site preparation. Both the lifting platform and steel backup are integral parts of the QuadGuard II cz so the installation of anchor bolts is usually all that is necessary.

because the QuadGuard II cz may be permanently installed on a prepared site. When there is no longer a need for temporary site protection, or when the construction job is finished, the QuadGuard II cz can be permanently installed.

because the QuadGuard II cz is crush efficient. Cartridges offer exceptional energy absorbing efficiency. With variable design lengths systems can be tailored to meet your design criteria. The QuadGuard II cz offers the best size/efficiency ratio of any impact attenuator. Thus, the shortest system possible for a given design speed can be installed. This increases driver decision distance and reduces the likelihood of the system being hit.

because the QuadGuard II cz meets your needs for temporary protection at most construction sites. Whether it be the end of unfinished median barriers, bridge piers, temporary or permanent safety walls, light posts, or numerous other types of hazards. As with the permanent QuadGuard II System, the system size should be chosen so that the width and length are no larger than necessary.

The QuadGuard II cz must be properly anchored. Refer to **Page 12** for the recommended anchorage for various foundations.

Table C QuadGuard II cz on a Plate Model Numbers

NUMBER OF BAYS	NOMINAL WIDTH		
	610 mm [24”]	760 mm [30”]	915 mm [36”]
2	QZ27024P	QZ27030P	QZ27036P
5	QZ210024P	QZ210030P	QZ210036P

Model Number Description

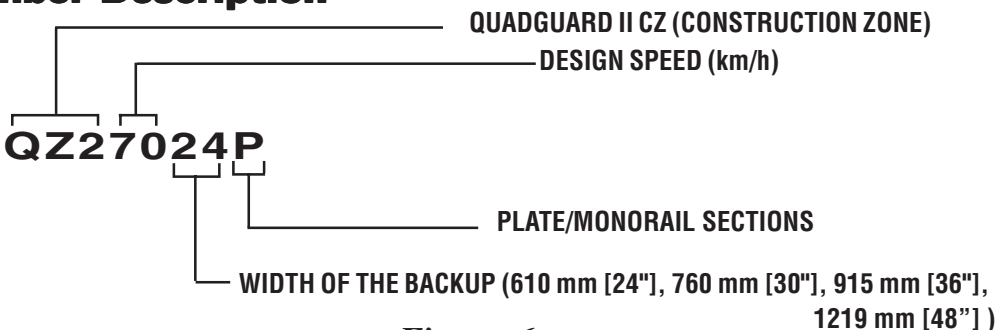

Figure 6
Model Number Key

QuadGuard® II System

QuadGuard II cz Foundation Specifications

Foundation Specifications

The QuadGuard cz may be installed on any of the following Foundations using the specified anchorage:

A: Concrete Pad

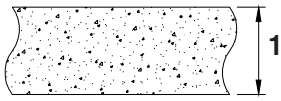

Foundation: 150 mm [6"] minimum depth Portland Cement Concrete (P.C.C.)

Anchorage: MP-3® with 180 mm [7"] studs 140 mm [5.5"] embedment

Note: 18" Anchors are supplied with the QuadGuard cz. If another substrate is encountered, please call customer service to discuss options.

B: Asphalt over P.C.C.

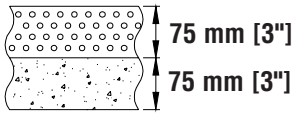

Foundation: 75 mm [3"] minimum Asphalt Concrete (A.C.) over 75 mm [3"] minimum (P.C.C.)

Anchorage: MP-3 with 460 mm [18"] studs 420 mm [16.5"] embedment

C: Asphalt over Subbase

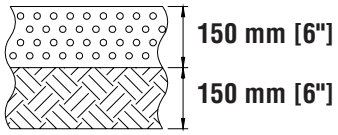

Foundation: 150 mm [6"] minimum (A.C.) over 150mm [6in] minimum Compacted Subbase (C.S.)

Anchorage: MP-3 with 460 mm [18"] studs 420 mm [16.5"] embedment

D: Asphalt Only

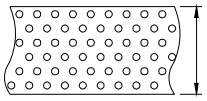

Foundation: 200 mm [8"] minimum (A.C.)

Anchorage: MP-3 with 460 mm [18"] studs 420 mm [16.5"] embedment

A. C. (Asphalt Concrete)

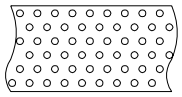

AR-4000 A. C.

(per ASTM D3381 '83) .75" Maximum,

Medium (Type A or B) aggregate

Sieve Size	Operating Range (%)Passing
1"	100
3/4"	95-100
3/8"	65-80
No. 4	49-54
No. 8	36-40
No. 30	18-21
No. 200	3-8

P.C.C. (Portland Cement Concrete)

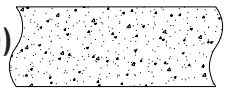

Stone aggregate concrete mix

4000 psi minimum compressive strength

(Sampling per ASTM C31-84

or ASTM C42-84a, testing per ASTM C39-84)

C.S. (Compacted Subbase)

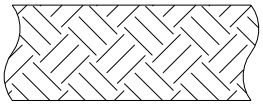

150 mm [6"] minimum depth 95% compaction

Class 2 aggregate

Sieve Size	Moving Average % Passing
3"	100
2 1/2"	90-100
No. 4	40-90
No. 200	0-25

For Customer Service Call
1-888-32-ENERG

General Installation Information

Required Tools

Documentation

- Manufacturer's Installation Manual
- Manufacturer's Drawing Package

Cutting equipment

- Rebar Cutting Bit
- 22 mm (7/8") Concrete Drill Bits (*Two Fluted)
- Grinder, Hacksaw or Torch (optional)
- Drill Motor
- Drill Bits: 1/16" through 7/8"

* Energy Absorption Systems recommends using two fluted drills to achieve optimum tensile strength when installing the MP-3 anchoring system.

Hammers

- Roto Hammer
- Sledgehammer
- Standard Hammer

Wrenches

- Heavy Duty Impact Wrench
- Standard adjustable wrench
- 1/2" drive sockets: 7/16", 9/16", 11/16", 3/4", 15/16", 1 1/8", 1 1/4"
- Deep Sockets: 5/16", 1 1/4"
- Ratchet and attachments for the above sockets
- Breaker Bar: 1/2" x 24"
- Torque Wrench: 200 ft-lbs.
- Crescent Wrench: 300 mm [12"]
- Allen Wrench: 3/8"
- Impact Wrench: 1/2"
- Open End Wrench: 7/16"

Personal protective equipment

- Safety Glasses
- Gloves

Miscellaneous

- Traffic Control Equipment
- Lifting and Moving Equipment (A lifting device is preferred although a forklift can be used.) Minimum 5,000 lb. capacity required.
- Compressor (100 psi) and Generator (5 KW)
- Long Pry Bar
- Drift Pin 300 mm [12"]
- Center Punch
- Tape Measure 7.5 m (25')
- Chalk Line
- Concrete Marking Pencil
- Nylon bottle brush for cleaning 7/8" drilled holes
- Rags, Water, and Solvent for Touch-up

Note: The above list of tools is a general recommendation. The actual number of tools required will depend on specific site conditions and the complexity of the installation.

Transitioning

Quad-Beam End Shoe Transition Panel

The Quad-Beam End Shoe Panel transitions the Quad-Guard II System to vertical faced concrete structures whether it is a concrete backup or concrete barrier wall, **see Page 15**. An Extended End Shoe is also available. In cases where the corners of the hazard are not chamfered it may be necessary to add wheel deflectors to the structure in order to prevent wheel snagging.

Quad-Beam to Guardrail Transition Panel (W-beam and Thrie-Beam)

The Quad-Beam to W-beam and Quad-Beam to Thrie-Beam Transition Panels transition the QuadGuard II System to new and existing runs of standard guardrail, **see Page 15**.

Quad-Beam to Safety Barrier Transition Panel

There are several options available when transitioning the QuadGuard II System to safety shape barrier depending on the shape and position of the barrier.

When transitioning to barriers with a "New Jersey" style profile, the 4" offset transition panel is most commonly used, see **Page 15**. For transitioning to barriers that are in line with the side of the system, use transition assembly 354018L or R. For transitioning a wide system to barrier that runs parallel to the centerline of the system, transition assembly 354042L or R is used. A 9" offset transition panel is also available for transitioning to barriers that are in line with the side of the system.

When transitioning to Single Slope style barriers and parapets, 6" and 8" offset transition panels are available. For transitioning a wide system to barrier that runs parallel to the centerline of the system, a 6" offset panel is available.

How do you determine the transition panel offset?

The Transition Panel Offset is determined by measuring the distance between the face of the barrier and the top edge of the backup diaphragm at 32" above ground level, **see Figure 7**. Remember, when installing the QuadGuard II System that the correct transition panel offset must be achieved in order for the offset bracket to nest between the barrier and transition panel ensuring proper performance of the transition.

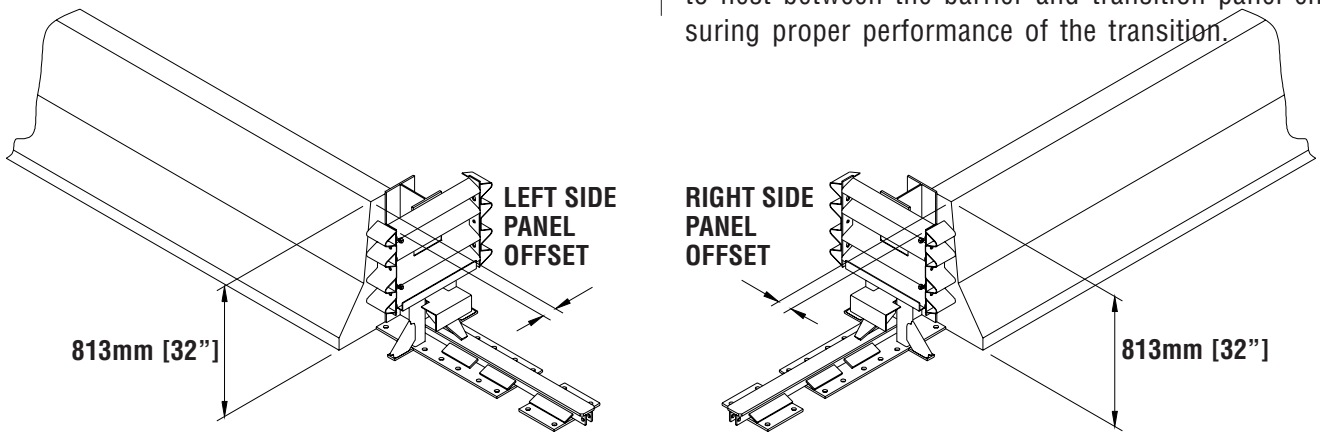

Left Side Application *Right Side Application*

Figure 7
Transition Panel Offset

Transitioning (cont'd.)

Transition Panel Types

If a system is placed in a location where traffic will be approaching from the rear, a transition panel is necessary. Figures 8, 9, 10 & 11 show the standard panel types. There are variations for each panel type. The specific panel needed will depend on system and site conditions. Therefore, it is important to send site specific data to the customer service department for a recommendation for exact panel needed for your application.

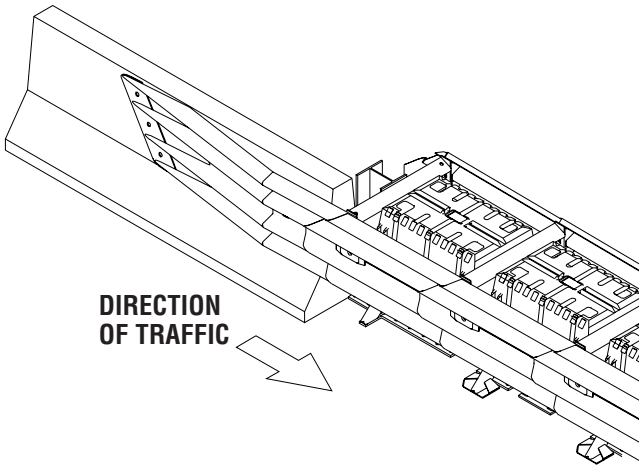

Figure 8
Quad-Beam to Safety Barrier (NJ Shape) Transition Panel

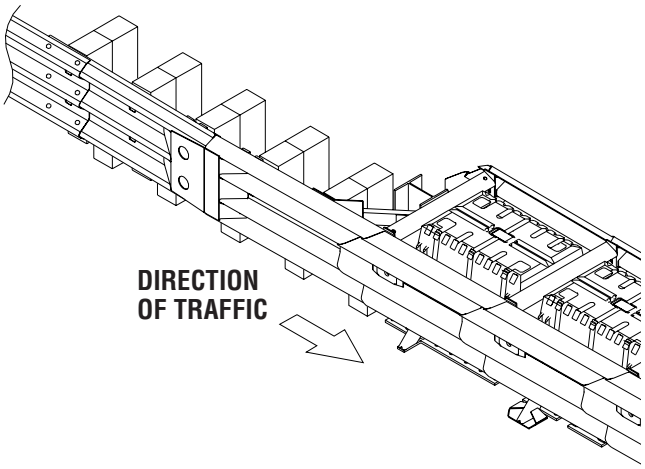

Figure 9
Quad-Beam to Thrie-Beam Transition Panel

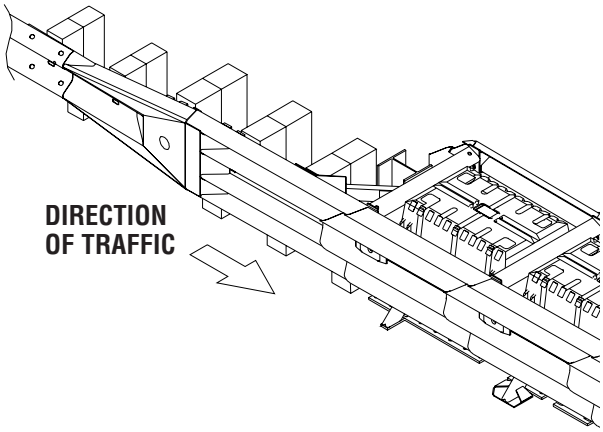

Figure 10
Quad-Beam to W-Beam Transition Panel

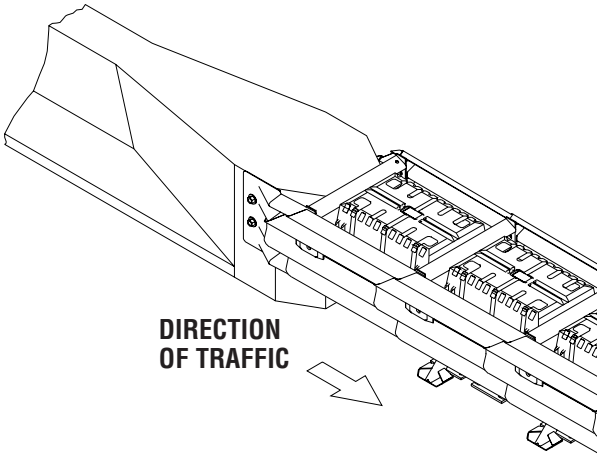

Figure 11
Quad-Beam End Shoe Transition Panel

Site Preparation

Establish Required System Footing

Note that the system must be anchored. MP-3 polyester anchor bolts will be supplied for all required anchorages in concrete. Refer to QuadGuard II Installation Manual, or MP-3 kits for detailed installation instructions.

1) Is the system to be placed on existing concrete?

Existing concrete - Concrete must be at least 150 mm [6"] thick, reinforced 28 MPa [4000 psi] Portland cement concrete (P.C.C.), or 200 mm [8"] thick non-reinforced 28 MPa [4000 psi] P.C. Concrete Roadway, measuring at least 3.66 m [12'-0"] wide by 15.24 m [50'-0"] long. The concrete should be in good condition and be free of major cracks.

New concrete - If existing concrete does not meet these criteria, a new concrete pad must be placed to properly secure the system. See concrete pad details supplied with the system.

2) Is there a cross slope at the installation site?

Cross slope exists - If there is a cross slope of more than 8% (5 deg.), or if the cross slope varies (twists) more than 2% (1 deg.) over the length of the system, a concrete leveling pad may be required. (**See Figure 12**)

No Cross slope - No additional action is required.

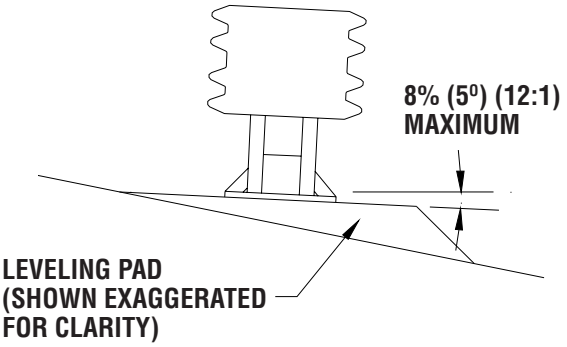

Figure 12
Cross-Slope

General Maintenance and Repair

The QuadGuard II System is considered to be reusable. After most design impacts, you can expect to reuse 65 - 70% of the system. The system must be inspected after each impact and must be pulled out to its original length. Depending on the impact, components may get damaged and need replacement.

Estimated time for Maintenance

An experienced two person crew with the proper tools and spare parts should be able to complete the work in one to 3 hours depending on the damage done to the system.

Life Expectancy

Environment

Except due to impact damage, it is anticipated that the cartridges will survive in a highway environment for a period ranging from 10 to 15 years from the date of installation.

Impacts

Life expectancy is also dependent on the impacts. This includes:

1. The number of impacts
2. The severity of the impacts
3. The temperature at the time of the impacts

Systems must be inspected after each impact. Any cartridge that is crushed or otherwise damaged should be replaced and the system should be pulled out to its original length.

IMPORTANT: After an impact, always follow the "Post-Impact Instructions" in the maintenance and repair section of the installation manual.

Recycling Information

When parts need to be replaced, it is recommended that the old parts be recycled as follows:

Steel should be sold as scrap to a local metal recycler.

Plastic from the cartridges should be sold to a plastic recycler if available. If a recycler is unavailable, dispose of the material as plastic refuse.

For Customer Service Call
1-888-32-ENERG

QuadGuard® II System

Limitations and Warnings

Energy Absorption Systems, Inc., in compliance with the National Cooperative Research Highway Program 350 (NCHRP Report 350) "Recommended Procedures for the Safety Performance of Highway Safety Features", contracts with FHWA approved testing facilities to perform crash tests, evaluation of tests, and submittal of results to the Federal Highway Administration for review.

The 5 bay QuadGuard II System has been tested and evaluated per the recommendations of the NCHRP 350 Guidelines* for Test Level 3 (TL-3) terminals and crash cushions. These tests typically evaluate product performance by closely simulating actual impacts involving a typical range of vehicles on roadways, from lightweight cars (approx. 820 kg [1800 lb.]) to full size pickup trucks (approx. 2000 kg [4400 lb.]). A product can be certified for various speed levels.

TL-1: 50 km/h [31.10 mph]

TL-2: 70 km/h [43.49 mph]

TL-3: 100 km/h [62.13 mph]

These tests are not designed to represent the performance of products when impacted by every vehicle type or every impact condition.

Energy Absorption Systems, Inc. does not represent nor warrant that the results of these controlled tests show that vehicle impacts with the products in other conditions would necessarily avoid injury to person(s) or property. Impacts that exceed the design capabilities of the product may not result in acceptable crash performance as outlined in NCHRP Report 350, relative to structural adequacy, occupant risk and vehicle trajectory. Energy Absorption Systems, Inc. expressly disclaims any warranty or liability for injury or damage to persons or property resulting from any impact, collision, or harmful contact with products, other vehicles, or nearby hazards or objects by any vehicle, object or person, whether or not the products were installed by or under the direction of Energy Absorption Systems, Inc. or by third parties.

Impact conditions which differ from those described in NCHRP 350 test matrix for non-gating, redirecting crash cushions may result in different crash results than those encountered in testing. Furthermore, impacts in excess of TL-3 impact severity, or the existence (at the site of the installation) of curbs or cross slopes in excess of 8% may yield crash performance which does not meet NCHRP 350 evaluation criteria relative to structural adequacy, occupant risk and vehicle trajectory factors.

The QuadGuard II System was designed to be installed, delineated, and maintained in accordance with State and Federal guidelines. It is important to select the most appropriate product configuration for a site. The customer should be careful to properly select, install and maintain the product. Careful evaluation of the site geometry, vehicle population type, speed, traffic direction and visibility are some of the elements that require evaluation in the proper selection of a safety appurtenance. For example, curbs could cause unsafe vehicle trajectory.

After an impact occurs, the product should be restored to its original condition as soon as possible. When a reusable safety product is struck, it is still necessary to restore the product to its original length and inspect all the components for damage and repair and/or replace components as necessary.

*Copy may be obtained from:
Transportation Research Board
National Research Council
2101 Constitution Avenue, N.W.
Washington, D.C. 20418

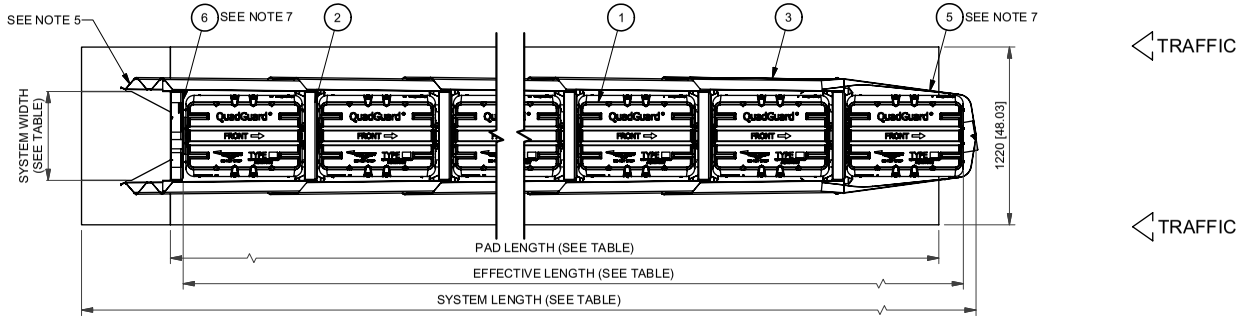

PLAN

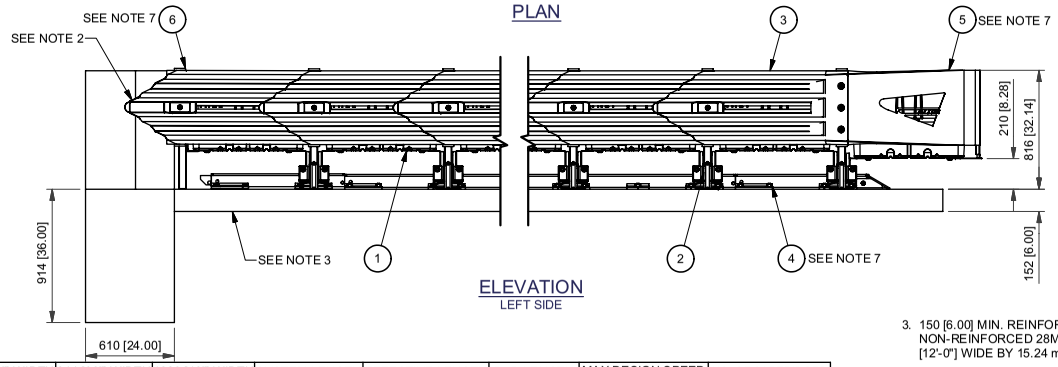

ELEVATION
LEFT SIDE

BAYS	610 [24"] WIDTH MODEL NO.	762 [30"] WIDTH MODEL NO.	914 [36"] WIDTH MODEL NO.	1220 [48"] WIDTH MODEL NO.	SYSTEM LENGTH m	ft-in	EFFECTIVE LENGTH m	ft-in	PAD LENGTH m	ft-in	MAX DESIGN SPEED Km/h	[MPH]	NO. OF CARTRIDGES TYPE I	TYPE II
1	QG24024	QG24030	QG24036	QG24048	2.52	[8'-3"]	1.73	[5'-8"]	1.68	[5'-6"]	40	[37]	2	0
2	QG27024	QG27030	QG27036	QG27048	3.43	[11'-3"]	2.64	[8'-8"]	2.59	[8'-6"]	70	[44]	2	1
3	QG28024	QG28030	QG28036	QG28048	4.34	[14'-3"]	3.56	[11'-8"]	3.51	[11'-6"]	80	[50]	2	2
4	QG29024	QG29030	QG29036	QG29048	5.26	[17'-3"]	4.47	[14'-8"]	4.42	[14'-6"]	90	[56]	3	2
5	QG210024	QG210030	QG210036	QG210048	6.17	[20'-3"]	5.38	[17'-8"]	5.33	[17'-6"]	100	[62]	3	3
6	QG210524	QG210530	QG210536	QG210548	7.09	[23'-3"]	6.30	[20'-8"]	6.25	[20'-6"]	105	[65]	4	3
7	QG211024	QG211030	QG211036	QG211048	8.00	[26'-3"]	7.21	[23'-8"]	7.16	[23'-6"]	110	[68]	4	4
8	QG211524	QG211530	QG211536	QG211548	8.92	[29'-3"]	8.13	[26'-8"]	8.08	[26'-6"]	115	[72]	4	5
9	QG212024	QG212030	QG212036	QG212048	9.83	[32'-3"]	9.04	[29'-8"]	8.99	[29'-6"]	120	[75]	4	6

NOTES:

1. IN COMPLIANCE WITH THE AASHTO 2002 ROADSIDE DESIGN GUIDE, MANUFACTURER RECOMMENDS REMOVAL OF ALL CURBS AND ISLANDS TO ENSURE PROPER IMPACT PERFORMANCE.
2. PROVISION SHALL BE MADE FOR REAR FENDER PANELS TO SLIDE REARWARD UPON IMPACT 762 [30.00] MIN.
3. 150 [6.00] MIN. REINFORCED MPa [4000 PSI] P.C. OCNCRETE PAD OR 200 [8.00] MIN. NON-REINFORCED 28MPa [4000 PSI] P.C. CONCRETE ROADWAY, MEASURING AT LEAST 3.66 m [12'-0"] WIDE BY 15.24 m [50'-0"] LONG.
4. SEE THE "QUADGUARD II SYSTEM PRODUCT MANUAL" FOR A DESCRIPTION OF ITS IMPACT PERFORMANCE CHARACTERISTICS AND DESIGN LIMITATIONS BEFORE PLACING A SYSTEM AT A GIVEN SITE. INFORMATION AND COPIES OF ABOVE MANUAL ARE AVAILABLE BY CALLING CUSTOMER SERVICE DEPARTMENT AT (888) 323-6374.
5. WHERE NECESSARY, THE CUSTOMER SHALL SUPPLY AN ADEQUATE TRANSITION FROM THE QUADGUARD II SYSTEM TO THE OBJECT BEING SHIELDED.
6. UNITS OF MEASUREMENT ARE MILLIMETERS [INCHES] UNLESS OTHERWISE NOTED.
7. BACKUP, MONORAIL, AND NOSE ASSEMBLIES ARE NOT INCLUDED IN MODEL NUMBER, ORDER SEPARATELY.
8. THE QUADGUARD II HAS BEEN FULLY TESTED TO NCHRP 350.

UNIDIRECTIONAL

KEY

1. CARTRIDGE
2. DIAPHRAGM
3. FENDER PANEL
4. MONORAIL
5. NOSE ASSEMBLY
6. BACKUP

Revision	Date	Rev	By	Chk.	App.
IN REF BOX SHIM KIT WAS (RAIL GUIDE) (ECO2663)	2/26/09	A	WWL	STT	MJB
REPLACED 2-5 BAY TABLE WITH 9 BAY TABLE	6/8/09	B	DDS	JME	RCB

SERIAL NO.
SALES ORDER
EH PROJECT
NO. OF UNITS

REFERENCES

DIAPHRAGM ASSY.	35-40-07
DIAPHRAGM SHIM KIT	3540078-0000
NOSE ASSY.	3540042-0000
FENDER PANEL ASSY.	35-40-04
BACKUP ASSY.	35-40-08, 14
MONORAIL ASSY.	35-40-75
CONCRETE PAD	35-40-77

DRAWN:	D. Kohfeld	DATE:	3/31/2009
DESIGNED:	M. Buehler	DATE:	12/30/2008
CHECKED:	KRM	DATE:	4/9/2009
APPROVED:	R. Brougher	DATE:	4/21/2009
FILE:	QG2CBCVR-U.idw		
NEXT ASSEMBLY:			

ENERGY ABSORPTION SYSTEMS, INC.
ENGINEERING AND RESEARCH DEPARTMENT

QUADGUARD II® SYSTEM
WITH CONCRETE BACKUP

SCALE:	DRAWING:	SHEET:	REV
	QG2CBCVR-U	1 of 1	B

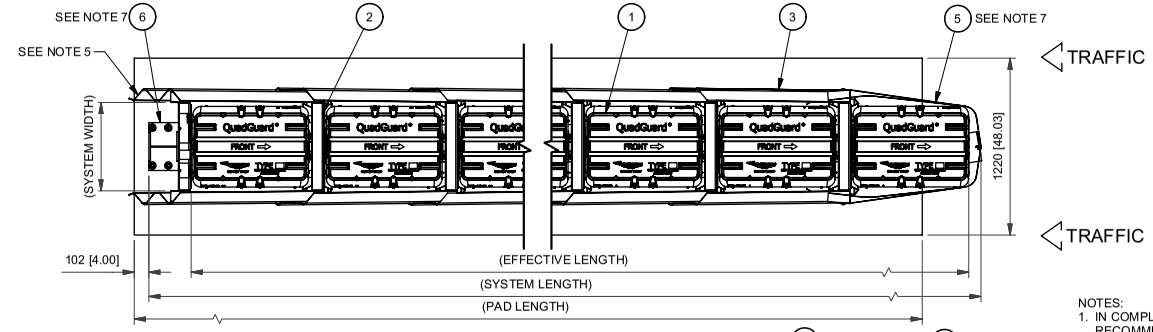

PLAN

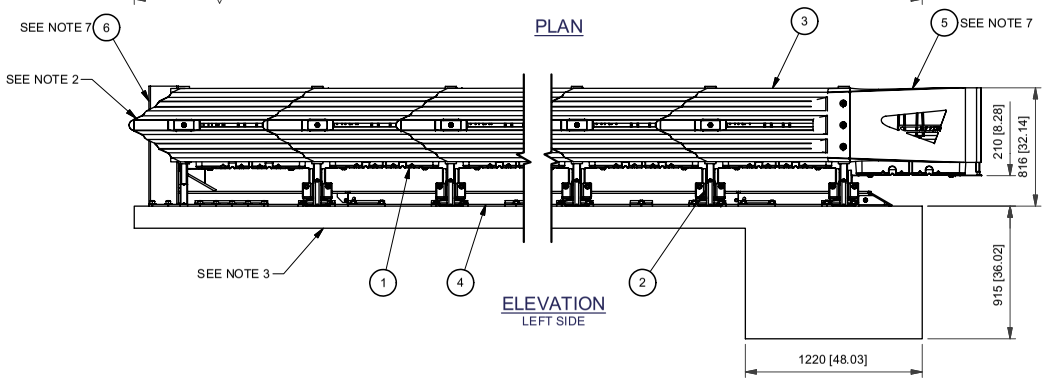

ELEVATION
LEFT SIDE

NOTES:

1. IN COMPLIANCE WITH THE AASHTO 2002 ROADSIDE DESIGN GUIDE, MANUFACTURER RECOMMENDS REMOVAL OF ALL CURBS AND ISLANDS TO ENSURE PROPER IMPACT PERFORMANCE.
2. PROVISION SHALL BE MADE FOR REAR FENDER PANELS TO SLIDE REARWARD UPON IMPACT 762 [30.00] MIN.
3. 150 [6.00] MIN. REINFORCED 28 MPa [4000 PSI] P.C. CONCRETE PAD OR 200 [8.00] MIN. NON-REINFORCED 28MPa [4000 PSI] P.C. CONCRETE ROADWAY, MEASURING AT LEAST 3.66 m [12'-0"] WIDE BY 15.24 m [50'-0"] LONG.
4. SEE THE "QUADGUARD II SYSTEM PRODUCT MANUAL" FOR A DESCRIPTION OF ITS IMPACT PERFORMANCE CHARACTERISTICS AND DESIGN LIMITATIONS BEFORE PLACING A SYSTEM AT A GIVEN SITE. INFORMATION AND COPIES OF ABOVE MANUAL ARE AVAILABLE BY CALLING CUSTOMER SERVICE DEPARTMENT AT (888) 323-6374.
5. WHERE NECESSARY, THE CUSTOMER SHALL SUPPLY AN ADEQUATE TRANSITION FROM THE QUADGUARD II SYSTEM TO THE OBJECT BEING SHIELDED.
6. UNITS OF MEASUREMENT ARE MILLIMETERS [INCHES] UNLESS OTHERWISE NOTED.
7. BACKUP, MONORAIL, AND NOSE ASSEMBLIES ARE NOT INCLUDED IN MODEL NUMBER, ORDER SEPARATELY.
8. THE QUADGUARD II SYSTEM HAS BEEN TESTED TO NCHRP 350.

BAYS	610 [24"] WIDTH MODEL NO.	762 [30"] WIDTH MODEL NO.	914 [36"] WIDTH MODEL NO.	1220 [48"] WIDTH MODEL NO.	SYSTEM LENGTH m	ft-in	EFFECTIVE LENGTH m	ft-in	PAD LENGTH m	ft-in	MAX DESIGN SPEED Km/h	[MPH]	NO. OF CARTRIDGES TYPE I	TYPE II
1	QG24024	QG24030	QG24036	QG24048	2.11	[6'-11"]	1.73	[5'-8"]	2.74	[9'-0"]	40	[37]	2	0
2	QG27024	QG27030	QG27036	QG27048	3.03	[9'-11"]	2.65	[8'-8"]	2.74	[9'-0"]	70	[44]	2	1
3	QG28024	QG28030	QG28036	QG28048	3.95	[12'-11"]	3.57	[11'-9"]	3.66	[12'-0"]	80	[50]	2	2
4	QG29024	QG29030	QG29036	QG29048	4.87	[16'-0"]	4.49	[14'-9"]	4.57	[15'-0"]	90	[56]	3	2
5	QG210024	QG210030	QG210036	QG210048	5.79	[19'-0"]	5.42	[17'-9"]	5.49	[18'-0"]	100	[62]	3	3
6	QG210524	QG210530	QG210536	QG210548	6.71	[22'-0"]	6.34	[20'-9"]	6.40	[21'-0"]	105	[65]	4	3
7	QG211024	QG211030	QG211036	QG211048	7.63	[25'-0"]	7.26	[23'-10"]	7.32	[24'-0"]	110	[68]	4	4
8	QG211524	QG211530	QG211536	QG211548	8.55	[28'-1"]	8.18	[26'-10"]	8.23	[27'-0"]	115	[72]	4	5
9	QG212024	QG212030	QG212036	QG212048	9.47	[31'-1"]	9.10	[29'-10"]	9.14	[30'-0"]	120	[75]	4	6

UNIDIRECTIONAL

KEY

1. CARTRIDGE
2. DIAPHRAGM
3. FENDER PANEL
4. MONORAIL
5. NOSE ASSEMBLY
6. BACKUP

Revision	Date	Rev	By	Chk.	App.
ADD 1, 3, 4, & 6-9 BAYS, ADD 48" WIDTH.	5/26/09	A	DK	JME	MJB
MONORAIL ASSY IN REFERENCES WAS 35-40-06, CONCRETE PAD WAS 35-40-11.	6/22/09	B	DDS	STT	RCB

REFERENCES

	DIAPHRAGM ASSY.	35-40-07
	SHIM KIT, DIAPHRAGM	3540078-0000
SERIAL NO.	NOSE ASSY.	3540042-0000
SALES ORDER	FENDER PANEL ASSY.	35-40-04
EH PROJECT	BACKUP ASSY.	35-40-03
NO. OF UNITS	MONORAIL ASSY.	35-40-75
	CONCRETE PAD	35-40-76

DRAWN:	D. Kohfeld	DATE:	2/25/2009
DESIGNED:	M. Buehler	DATE:	12/30/2008
CHECKED:	JME	DATE:	3/4/2009
APPROVED:	MJB	DATE:	3/19/2009
FILE:	QG2TSCVR-U.idw		
NEXT ASSEMBLY:			

ENERGY ABSORPTION SYSTEMS, INC.
ENGINEERING AND RESEARCH DEPARTMENT

QUADGUARD II® SYSTEM
WITH TENSION STRUT BACKUP

SCALE:	DRAWING:	SHEET:	REV
	QG2TSCVR-U	1 of 1	B

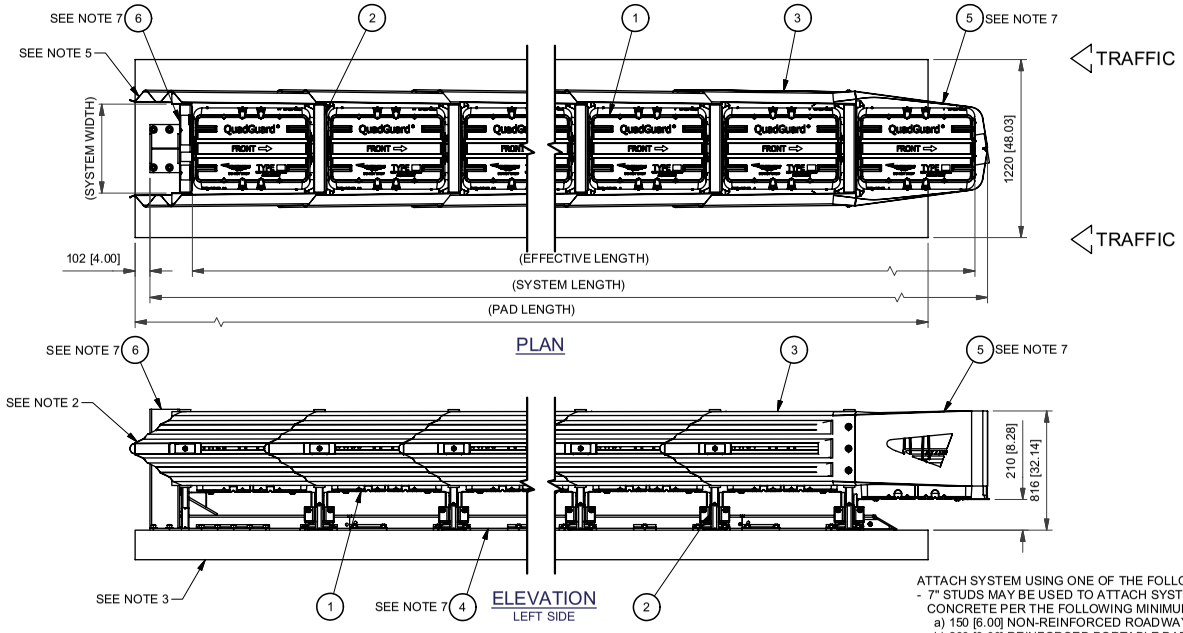

BAYS	610 [24"] WIDTH	762 [30"] WIDTH	914 [36"] WIDTH	1220 [48"] WIDTH	SYSTEM LENGTH	EFFECTIVE LENGTH	PAD LENGTH	MAX DESIGN SPEED	NO. OF	CARTRIDGES
**	MODEL #	MODEL #	MODEL #	MODEL #	m ft-in	m ft-in	m ft-in	Km/h [MPH]	TYPE I	TYPE II
2	QG27024	QG27030	QG27036	QG27048	3.03 [9'-11"]	2.65 [8'-8"]	2.74 [9'-0"]	70 [44]	2	1
3	QG28024	QG28030	QG28036	QG28048	3.95 [12'-11"]	3.57 [11'-9"]	3.66 [12'-0"]	80 [50]	2	2
4	QG29024	QG29030	QG29036	QG29048	4.87 [16'-0"]	4.49 [14'-9"]	4.57 [15'-0"]	90 [56]	3	2
5	QG210024	QG210030	QG210036	QG210048	5.79 [19'-0"]	5.42 [17'-9"]	5.49 [18'-0"]	100 [62]	3	3
6	QG210524	QG210530	QG210536	QG210548	6.71 [22'-0"]	6.34 [20'-9"]	6.40 [21'-0"]	105 [65]	4	3
7	QG211024	QG211030	QG211036	QG211048	7.63 [25'-0"]	7.26 [23'-10"]	7.32 [24'-0"]	110 [68]	4	4
8	QG211524	QG211530	QG211536	QG211548	8.55 [28'-1"]	8.18 [26'-10"]	8.23 [27'-0"]	115 [71]	4	5
9	QG212024	QG212030	QG212036	QG2120348	9.47 [31'-1"]	9.10 [29'-10"]	9.14 [30'-0"]	120 [75]	4	6

NOTES:
1. IN COMPLIANCE WITH THE AASHTO 2002 ROADSIDE DESIGN GUIDE, MANUFACTURER RECOMMENDS REMOVAL OF ALL CURBS AND ISLANDS TO ENSURE PROPER IMPACT PERFORMANCE.
2. PROVISION SHALL BE MADE FOR REAR FENDER PANELS TO SLIDE REARWARD UPON IMPACT 762 [30.00] MIN.
3. **CAUTION: THE QUADGUARD II C.Z. MUST BE CORRECTLY ANCHORED FOR PROPER IMPACT PERFORMANCE.**

ATTACH SYSTEM USING ONE OF THE FOLLOWING:
- 7" STUDS MAY BE USED TO ATTACH SYSTEM TO 28 MPa [4000 PSI] MIN. P.C. CONCRETE PER THE FOLLOWING MINIMUMS:**
  a) 150 [6.00] NON-REINFORCED ROADWAY OF PAD.
  b) 200 [8.00] REINFORCED PORTABLE PAD PER THE REFERENCE DETAIL.
  c) 180 [7.00] DECK STRUCTURE.
- 18" THREADED RODS MAY BE USED TO INSTALL SYSTEM ON ASHPALT.**
  **REFER TO THE QUADGUARD II C.Z. MP-3 ANCHORING SYSTEM INSTALLATION INSTRUCTIONS FOR SPECIFICATIONS.

4. SEE THE "QUADGUARD II SYSTEM PRODUCT MANUAL" FOR A DESCRIPTION OF ITS IMPACT PERFORMANCE CHARACTERISTICS AND DESIGN LIMITATIONS BEFORE PLACING A SYSTEM AT A GIVEN SITE. INFORMATION AND COPIES OF ABOVE MANUAL ARE AVAILABLE BY CALLING CUSTOMER SERVICE DEPARTMENT AT (888) 323-6374.
5. WHERE NECESSARY, THE CUSTOMER SHALL SUPPLY AN ADEQUATE TRANSITION FROM THE QUADGUARD II SYSTEM TO THE OBJECT BEING SHIELDED.
6. UNITS OF MEASUREMENT ARE MILLIMETERS [INCHES] UNLESS OTHERWISE NOTED.
7. BACKUP, MONORAIL, ANCHOR, AND NOSE ASSEMBLIES ARE NOT INCLUDED IN MODEL NUMBER, ORDER SEPARATELY.
8. THE QUADGUARD II HAS BEEN FULLY TESTED TO NCHRP 350.

UNIDIRECTIONAL

KEY
1. CARTRIDGE
2. DIAPHRAGM
3. FENDER PANEL
4. MONORAIL
5. NOSE ASSEMBLY
6. BACKUP

Revision	Date	Rev	By	Chk.	App.
IN REF BOX SHIM KIT WAS (RAIL GUIDE) (ECO2663)	2/26/09	A	WWL	STT	MJB
CONCRETE PAD REFERENCE NUMBER WAS 35-40-76,ADDED LIFTING KIT AND PCMB NUMBERS	6/22/09	B	DDS	STT	RCB

SERIAL NO.
SALES ORDER
EH PROJECT
NO. OF UNITS

REFERENCES

DIAPHRAGM ASSY.	35-40-07
DIAPHRAGM SHIM KIT	3540078-0000
NOSE ASSY.	3540042-0100
FENDER PANEL ASSY.	35-40-04
BACKUP ASSY.	35-40-16
MONORAIL ASSY.	35-40-75
CONCRETE PAD	35-40-10
ANCHOR/LIFTING KIT	35-40-24
PCMB ANCHOR ASSY.	3540260-0000

DRAWN: D. Kohfeld	DATE: 2/25/2009	ENERGY ABSORPTION SYSTEMS, INC. ENGINEERING AND RESEARCH DEPARTMENT	
DESIGNED: M. Buehler	DATE: 12/30/2008	QUADGUARD II® C.Z. SYSTEM FOR CONSTRUCTION ZONES	
CHECKED: JME	DATE: 4/27/2009		
APPROVED: R. Brougher	DATE: 4/22/2009		
FILE: QG2CZCVR-U.idw			
NEXT ASSEMBLY:		SCALE:	DRAWING: QG2CZCVR-U / SHEET: 1 of 1 / REV: B

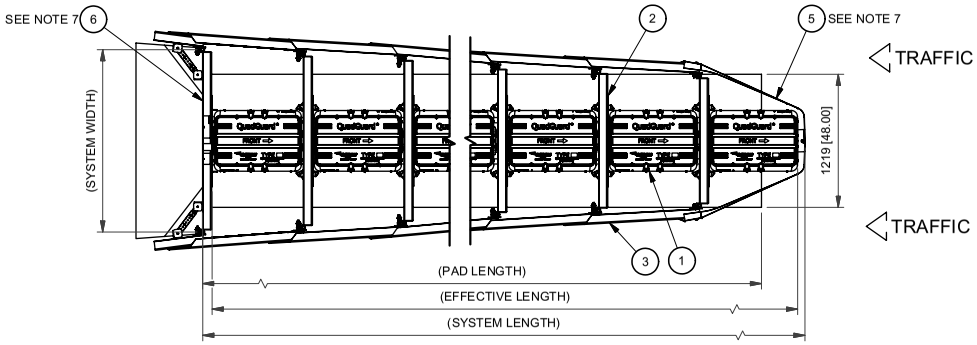

PLAN

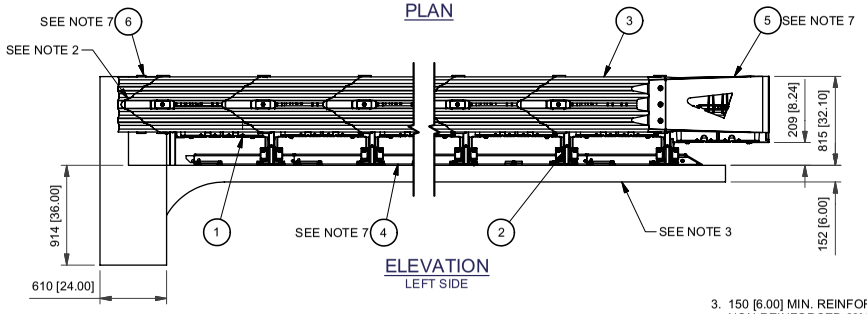

ELEVATION
LEFT SIDE

BAYS	1753 [69"] WIDTH	2286 [90"] WIDTH	SYSTEM LENGTH		EFFECTIVE LENGTH		PAD LENGTH		MAX DESIGN SPEED		NO. OF	CARTRIDGES
**	MODEL #	MODEL #	m	ft-in	m	ft-in	m	ft-in	Km/h	[MPH]	TYPE I	TYPE II
3	QG27069	QG27090	4.57	[15'-0"]	3.56	[11'-8"]	3.51	[11'-6"]	70	[50]	2	2
4	QG28069	QG28090	5.49	[18'-0"]	4.47	[14'-8"]	4.42	[14'-6"]	80	[56]	3	2
5	QG210069	QG210090	6.40	[21'-0"]	5.38	[17'-8"]	5.33	[17'-6"]	100	[62]	3	3
6	QG210569	QG210590	7.32	[24'-0"]	6.30	[20'-8"]	6.25	[20'-6"]	105	[65]	4	3
7	QG211069	QG211090	8.23	[27'-0"]	7.21	[23'-8"]	7.16	[23'-6"]	110	[68]	4	4
8	QG211569	QG211590	9.14	[30'-0"]	8.13	[26'-8"]	8.08	[26'-6"]	115	[71]	4	5
9	QG212069	QG212090	10.06	[33'-0"]	9.04	[29'-8"]	8.99	[29'-6"]	120	[75]	4	6

NOTES:
1. IN COMPLIANCE WITH THE AASHTO 2002 ROADSIDE DESIGN GUIDE, MANUFACTURER RECOMMENDS REMOVAL OF ALL CURBS AND ISLANDS TO ENSURE PROPER IMPACT PERFORMANCE.
2. PROVISION SHALL BE MADE FOR REAR FENDER PANELS TO SLIDE REARWARD UPON IMPACT 762 [30.00] MIN.
3. 150 [6.00] MIN. REINFORCED 28 MPa [4000 PSI] P.C. CONCRETE PAD OR 200 [8.00] MIN. NON-REINFORCED 28MPa [4000 PSI] P.C. CONCRETE ROADWAY, MEASURING AT LEAST 3.66 m [12'-0"] WIDE BY 15.24 m [50'-0"] LONG.
4. SEE THE "QUADGUARD II SYSTEM PRODUCT MANUAL" FOR A DESCRIPTION OF ITS IMPACT PERFORMANCE CHARACTERISTICS AND DESIGN LIMITATIONS BEFORE PLACING A SYSTEM AT A GIVEN SITE. INFORMATION AND COPIES OF ABOVE MANUAL ARE AVAILABLE BY CALLING CUSTOMER SERVICE DEPARTMENT AT (888) 323-6374.
5. WHERE NECESSARY, THE CUSTOMER SHALL SUPPLY AN ADEQUATE TRANSITION FROM THE QUADGUARD II SYSTEM TO THE OBJECT BEING SHIELDED.
6. UNITS OF MEASUREMENT ARE MILLIMETERS [INCHES] UNLESS OTHERWISE NOTED.
7. BACKUP, MONORAIL, AND NOSE ASSEMBLIES ARE NOT INCLUDED IN MODEL NUMBER, ORDER SEPARATELY.
8. THE QUADGUARD II FAMILY HAS BEEN FULLY TESTED TO NCHRP 350.

UNIDIRECTIONAL

KEY
1 CARTRIDGE
2 DIAPHRAGM
3 FENDER PANEL
4 MONORAIL
5 NOSE ASSEMBLY
6 BACKUP

Revision	Date	Rev	By	Chk.	App.
IN REF BOX SHIM KIT WAS (RAIL GUIDE) (ECO2663)	2/26/09	A	WWL	STT	MJB
REPLACED EXISTING TABLE WITH MODEL TABLE, CONCRETE PAD IN REFERENCES WAS 35-40-77	6/19/09	B	DDS	STT	RCB

REFERENCES

DIAPHRAGM ASSY.	3540340-0000
DIAPHRAGM SHIM KIT	3540078-0000
NOSE ASSY.	3540043-0000
FENDER PANEL ASSY.	3540370-0000
BACKUP ASSY.	3540400-0000
MONORAIL ASSY.	35-40-75
CONCRETE PAD	3540411-0000

SERIAL NO.
SALES ORDER
EH PROJECT
NO. OF UNITS

DRAWN:	D. Kohfeld	DATE:	4/6/2009
DESIGNED:	M. Buehler	DATE:	12/30/2008
CHECKED:	JME	DATE:	4/14/2009
APPROVED:	M. Buehler	DATE:	4/15/2009
FILE:	QF2CBCVR-U.idw		
NEXT ASSEMBLY:			

ENERGY ABSORPTION SYSTEMS, INC.
ENGINEERING AND RESEARCH DEPARTMENT

QUADGUARD II® SYSTEM
WITH CONCRETE BACKUP

SCALE:	DRAWING:	SHEET:	REV
	QF2CBCVR-U	1 of 1	B

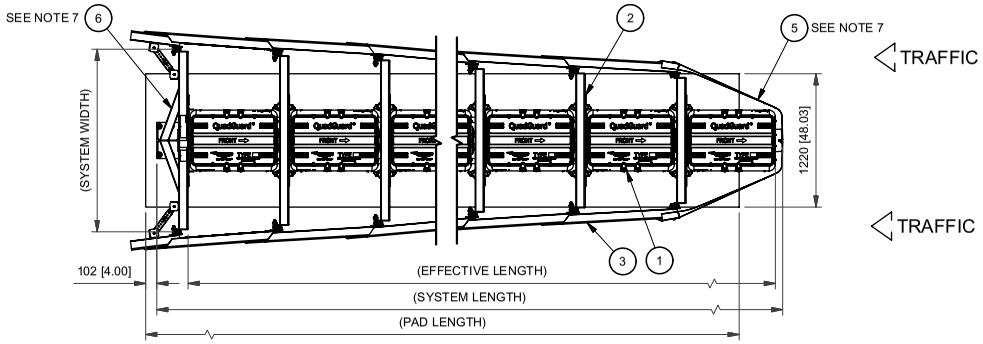

PLAN

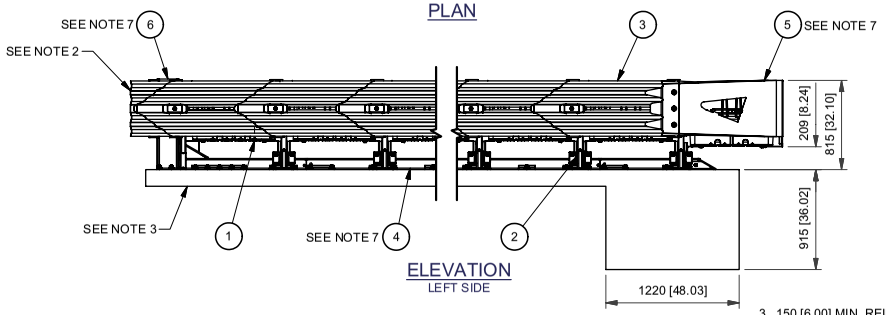

ELEVATION
LEFT SIDE

BAYS	1753 [69"] WIDTH	2286 [90"] WIDTH	SYSTEM LENGTH		EFFECTIVE LENGTH		PAD LENGTH		MAX DESIGN SPEED		NO. OF	CARTRIDGES
**	MODEL #	MODEL #	m	ft-in	m	ft-in	m	ft-in	Km/h	[MPH]	TYPE I	TYPE II
3	QG27069	QG27090	4.78	[15'-8"]	3.56	[11'-8"]	3.66	[12'-0"]	70	[50]	2	2
4	QG28069	QG28090	5.69	[18'-8"]	4.47	[14'-8"]	4.57	[15'-0"]	80	[56]	3	2
5	QG210069	QG210090	6.60	[21'-8"]	5.38	[17'-8"]	5.49	[18'-0"]	100	[62]	3	3
6	QG210569	QG210590	7.52	[24'-8"]	6.30	[20'-8"]	6.40	[21'-0"]	105	[65]	4	3
7	QG211069	QG211090	8.43	[27'-8"]	7.21	[23'-8"]	7.32	[24'-0"]	110	[68]	4	4
8	QG211569	QG211590	9.34	[30'-8"]	8.13	[26'-8"]	8.23	[27'-0"]	115	[71]	4	5
9	QG212069	QG212090	10.26	[33'-8"]	9.04	[29'-8"]	9.14	[30'-0"]	120	[75]	4	6

NOTES:
1. IN COMPLIANCE WITH THE AASHTO 2002 ROADSIDE DESIGN GUIDE, MANUFACTURER RECOMMENDS REMOVAL OF ALL CURBS AND ISLANDS TO ENSURE PROPER IMPACT PERFORMANCE.
2. PROVISION SHALL BE MADE FOR REAR FENDER PANELS TO SLIDE REARWARD UPON IMPACT 762 [30.00] MIN.
3. 150 [6.00] MIN. REINFORCED 28 MPa [4000 PSI] P.C. OCNCRETE PAD OR 200 [8.00] MIN. NON-REINFORCED 28 MPa [4000 PSI] P.C. CONCRETE ROADWAY, MEASURING AT LEAST 3.66 m [12'-0"] WIDE BY 15.24 m [50'-0"] LONG.
4. SEE THE "QUADGUARD II SYSTEM PRODUCT MANUAL" FOR A DESCRIPTION OF ITS IMPACT PERFORMANCE CHARACTERISTICS AND DESIGN LIMITATIONS BEFORE PLACING A SYSTEM AT A GIVEN SITE. INFORMATION AND COPIES OF ABOVE MANUAL ARE AVAILABLE BY CALLING CUSTOMER SERVICE DEPARTMENT AT (888) 323-6374.
5. WHERE NECESSARY, THE CUSTOMER SHALL SUPPLY AN ADEQUATE TRANSITION FROM THE QUADGUARD II SYSTEM TO THE OBJECT BEING SHIELDED.
6. UNITS OF MEASUREMENT ARE MILLIMETERS [INCHES] UNLESS OTHERWISE NOTED.
7. BACKUP, MONORAIL, AND NOSE ASSEMBLIES ARE NOT INCLUDED IN MODEL NUMBER, ORDER SEPARATELY.
8. THE QUADGUARD II HAS BEEN FULLY TESTED TO NCHRP 350 TL-3.

UNIDIRECTIONAL

KEY
1. CARTRIDGE
2. DIAPHRAGM
3. FENDER PANEL
4. MONORAIL
5. NOSE ASSEMBLY
6. BACKUP

Revision	Date	Rev	By	Chk.	App.
IN REF BOX SHIM KIT WAS (RAIL GUIDE) (ECO2663)	2/26/09	A	WWL	STT	MJB
REPLACED EXISTING TABLE WITH MODEL TABLE	6/19/09	B	DDS	STT	RCB

REFERENCES

SERIAL NO.	DIAPHRAGM ASSY.	3540340-0000
SALES ORDER	DIAPHRAGM SHIM KIT	3540078-0000
EH PROJECT	NOSE ASSY.	3540043-0000
NO. OF UNITS	FENDER PANEL ASSY.	3540370-0000
	BACKUP ASSY.	3540390-0000
	MONORAIL ASSY.	35-40-75
	CONCRETE PAD	35-40-76

DRAWN:	D. Kohfeld	DATE:	4/6/2009
DESIGNED:	M. Buehler	DATE:	12/30/2008
CHECKED:	JME	DATE:	4/27/2009
APPROVED:	R. Brougher	DATE:	4/22/2009
FILE:	QF2TSCVR-U.idw		
NEXT ASSEMBLY:			

ENERGY ABSORPTION SYSTEMS, INC.
ENGINEERING AND RESEARCH DEPARTMENT

QUADGUARD II® SYSTEM
WITH TENSION STRUT BACKUP

SCALE:	DRAWING:	SHEET:	REV
	QF2TSCVR-U	1 of 1	B

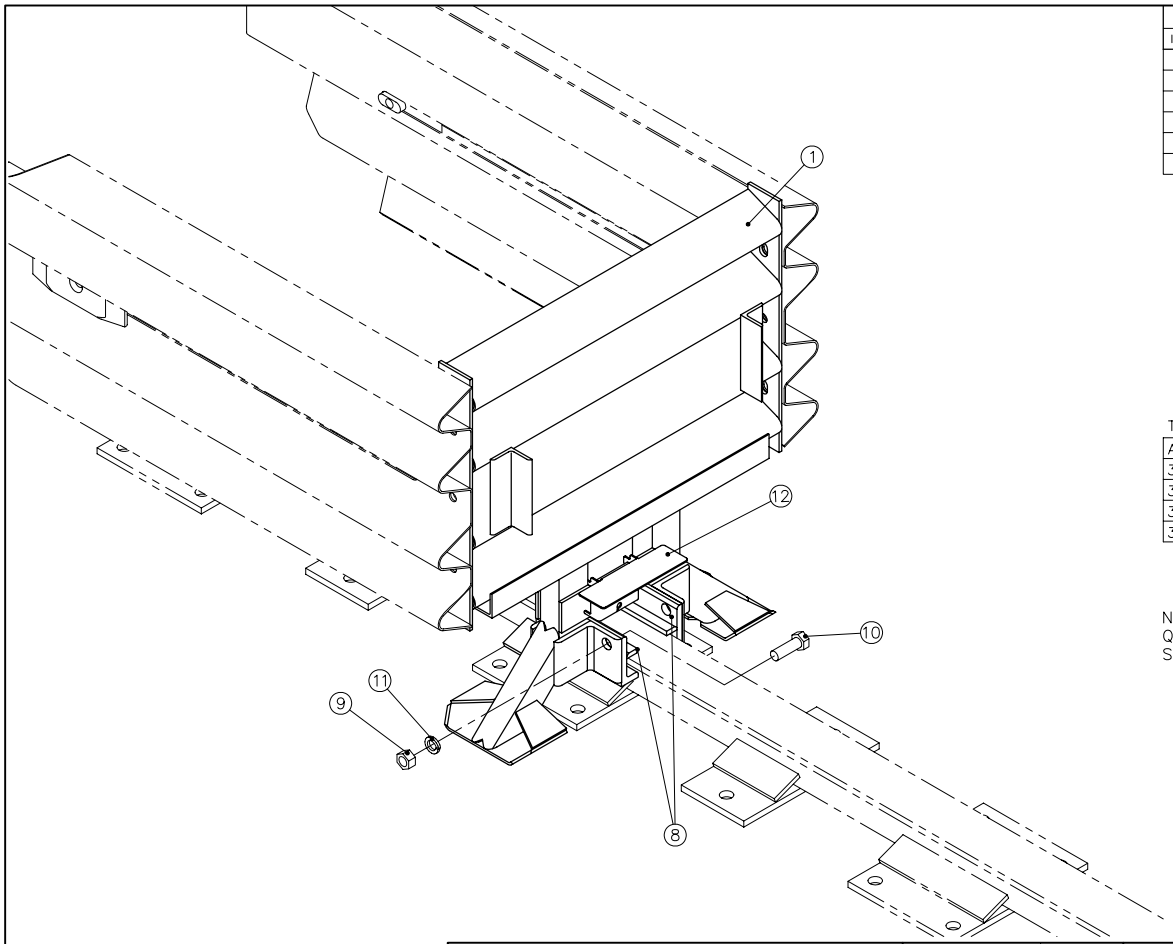

PARTS LIST

ITEM	STOCK NO.	DESCRIPTION	REQ'D
1	SEE TABLE A	DIAPHRAGM,QB,QG,G	1.00
8	2760091–0000	MONORAIL GUIDE,QG,G	2.00
9	2704341–0000	NUT,HX,3/4,G,GR DH	4.00
10	2699121–0000	BOLT,HX,3/4X2,G8,G	4.00
11	2708201–0000	WASHER,LOCK,3/4,G	4.00
12	2760292–0000	BRACKET,CART SUPPORT,DIAPHRAGM	2.00

TABLE A

ASSY. NO.	STOCK NO.	DESCRIPTION	WIDTH
3540071–0000	2761011–0000	DIAPHRAGM,QB,24,QG,G	610 [24.00]
3540072–0000	2761021–0000	DIAPHRAGM,QB,30,QG,G	760 [30.00]
3540073–0000	2761031–0000	DIAPHRAGM,QB,36,QG,G	915 [36.00]
3540079–0000	2761092–0000	DIAPHRAGM,QB,48,QG,G	1219 [48.00]

NOTE:
QUADGUARD II REQUIRES SHIM KIT,
SEE DRAWING 3540078–0000.

ASSEMBLY NO. SEE TABLE A

Revisions	Date	Rev.	By	Ckd.	App.
UPDATED VIEW OF ITEM 12 (ECO 2495)	10/29/08	E	WWL	STT	PLK
ADDED NOTE (ECO 2663)	5/27/09	F	WWL	STT	MJB
ADDED 48" ASSY INFO INTO TABLE A	06/04/09	G	RJV	STT	RCB

REFERENCES

DRAWN: J. Espinoza DATE: 5–2–96
DESIGNED: DATE:
CHECKED: S. Trageser DATE: 5/17/96
APPROVED: J. Machado DATE: 5/17/96
CAD FILE: 354007.dwg
NEXT ASSEMBLY:

ENERGY ABSORPTION SYSTEMS, INC.
ENGINEERING AND RESEARCH DEPARTMENT

QUADGUARD® SYSTEM

DIAPHRAGM ASSY, QG

SCALE N.T.S. | DWG. 35–40–07 | SHEET 1 of 1 | REV G

PARTS LIST			
ITEM	STOCK NO.	DESCRIPTION	QTY.
1	2723315-0000	SHIM,1/8X3 5/8X8,G	2

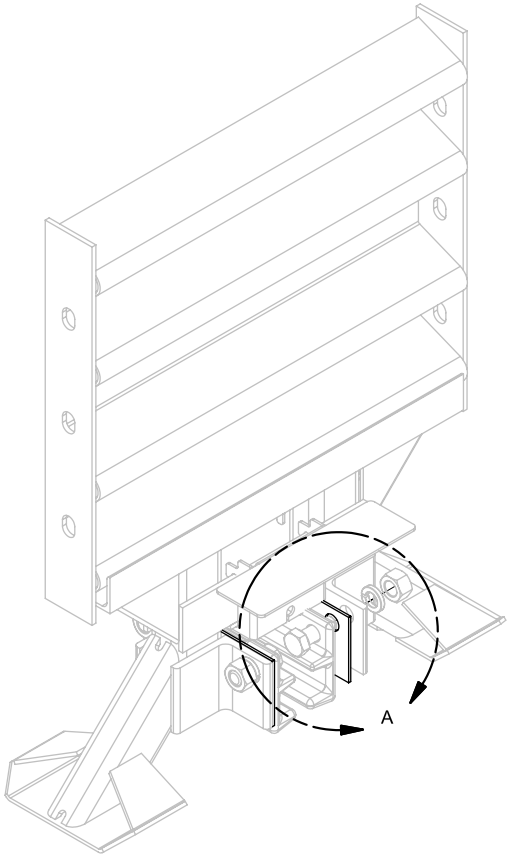

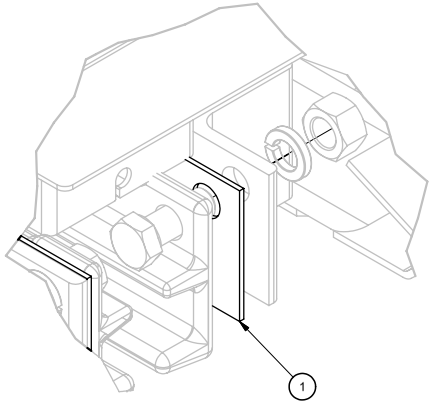

DETAIL A
TYPICAL BOTH SIDES

ASSEMBLY NO. 3540078-0000

Revision	Date	Rev	By	Chk.	App.
DESCRIPTION WAS: SHIM KIT,RAIL GUIDE,QG2 (ECO 2663)	5/27/09	A	WWL	STT	MJB
UPDATED ITEM 1.	7/14/09	B	DK	JME	RCB

DRAWN: D. Kohfeld	DATE: 2/27/2009
DESIGNED: M. Buehler	DATE: 12/30/2008
CHECKED: JME	DATE: 3/4/2009
APPROVED: MJB	DATE: 3/19/2009
FILE: 3540078-0000.idw	
NEXT ASSEMBLY:	

ENERGY ABSORPTION SYSTEMS, INC.
ENGINEERING AND RESEARCH DEPARTMENT

SHIM KIT,DIAPHRAGM,RAIL GUIDE,QG II

SCALE:	DRAWING:	SHEET:	REV
	3540078-0000	1 of 1	B

PARTS LIST			
ITEM	STOCK NO.	DESCRIPTION	QTY.
1	2760072-0*00	NOSE,L,NARROW,QGII,W/LOGO	1
2	2760073-0*00	NOSE,R,NARROW,QGII,W/LOGO	1
3	2760076-0000	BRACKET,CART SUPPORT,NOSE,QGII,B	1
4	2760297-0000	BRACKET,CART SUPPORT,NOSE BAY,QGII,G	1
5	2699065-0000	BOLT,HX,1/4X3/4,G	6
6	2699841-0000	BOLT,BT,5/8X1 1/4,HX SOC,M GALV	6
7	2700501-0000	BOLT,HX,5/8X2,G2,G	6
8	2704151-0000	NUT,HX,1/4,G	6
9	2704191-0000	NUT,HX,5/8,G,RAIL	6
10	2704851-0000	NUT,HEX,COUPLING,5/8-11X2 1/8,G	6
11	2708281-0000	WASHER,LOCK,1/4,G	6
12	2708291-0000	WASHER,FLAT,5/8 X 1 3/4, G	6

* 1 - YELLOW
* 2 - BLACK

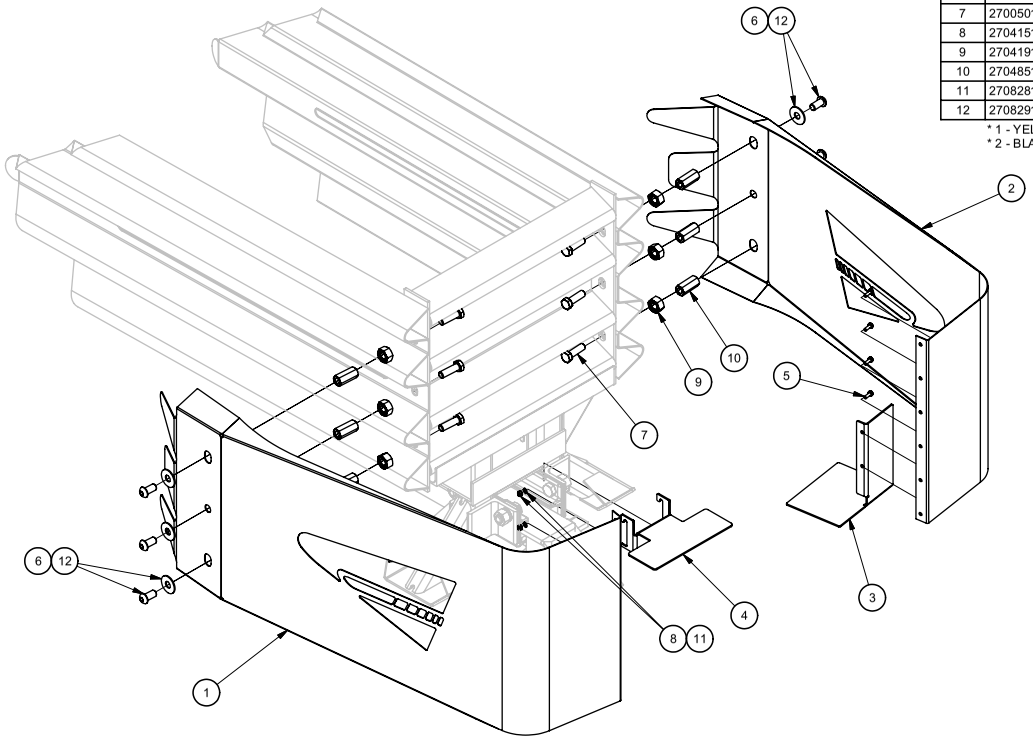

ASSEMBLY NO. 3540042-0100 (YELLOW)
ASSEMBLY NO. 3540042-0200 (BLACK)

Revision	Date	Rev	By	Chk.	App.
ADDED BLACK OPTION, DWG NO. WAS 3540042-0100.	4/9/09	A	DK	KRM	MJB
ADD SHEET 2, PN 3540044-0100 & 3540044-0200.	5/22/09	B	DK	BK	BRE

DRAWN: D. Kohfeld	DATE: 2/26/2009		
DESIGNED: M. Buehler	DATE: 12/30/2008		
CHECKED: JME	DATE: 3/4/2009		
APPROVED: MJB	DATE: 3/19/2009		
FILE: 3540042-0000.idw			
NEXT ASSEMBLY:			

ENERGY ABSORPTION SYSTEMS, INC.
ENGINEERING AND RESEARCH DEPARTMENT

NOSE ASSY,QGII,NARROW

SCALE:	DRAWING: 3540042-0000	SHEET: 1 of 2	REV: B

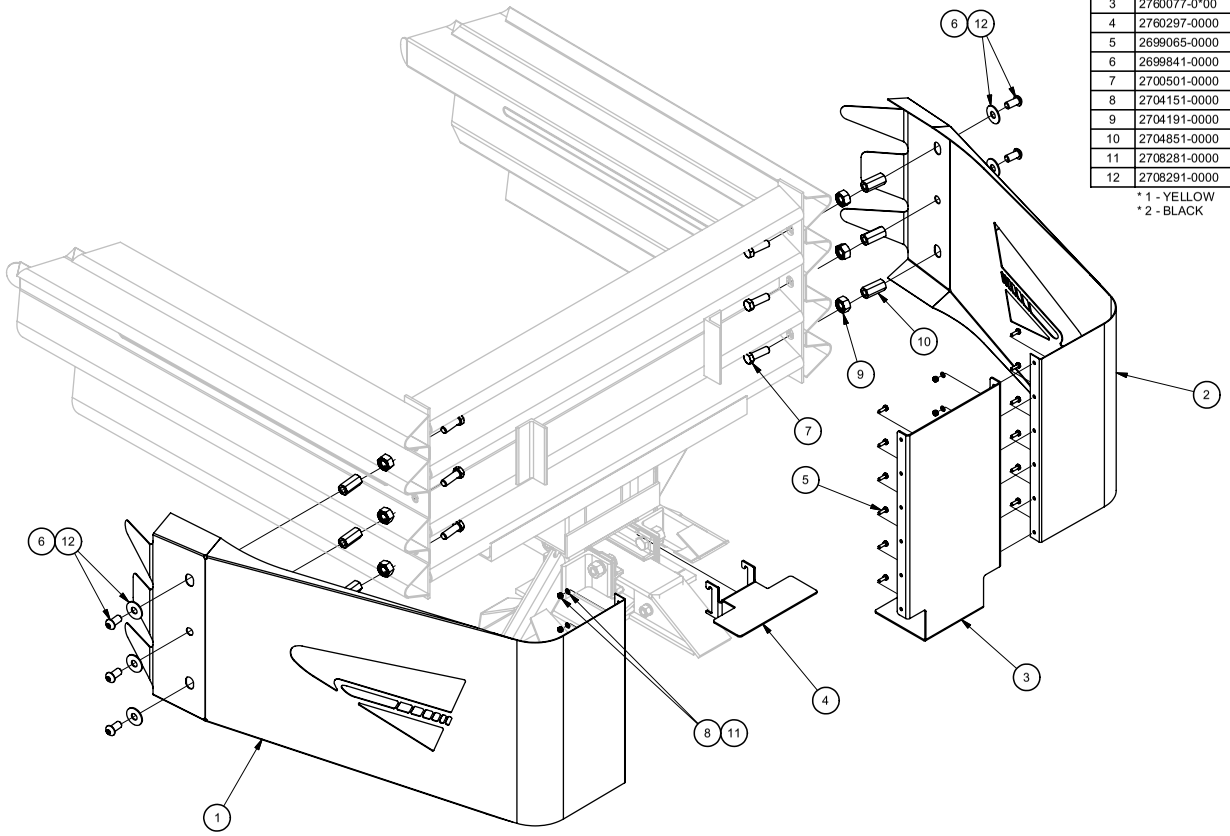

PARTS LIST			
ITEM	STOCK NO.	DESCRIPTION	QTY.
1	2760072-0*00	NOSE,L,NARROW,QGII,W/LOGO	1
2	2760073-0*00	NOSE,R,NARROW,QGII,W/LOGO	1
3	2760077-0*00	SPACER,12,NOSE ASSY,QGII	1
4	2760297-0000	BRACKET,CART SUPPORT,NOSE BAY,QGII,G	1
5	2699065-0000	BOLT,HX,1/4X3/4,G	12
6	2699841-0000	BOLT,BT,5/8X1 1/4,HX SOC,M GALV	6
7	2700501-0000	BOLT,HX,5/8X2,G2,G	6
8	2704151-0000	NUT,HX,1/4,G	12
9	2704191-0000	NUT,HX,5/8,G,RAIL	6
10	2704851-0000	NUT,HEX,COUPLING,5/8-11X2 1/8,G	6
11	2708281-0000	WASHER,LOCK,1/4,G	12
12	2708291-0000	WASHER,FLAT,5/8 X 1 3/4, G	6

* 1 - YELLOW
* 2 - BLACK

ASSEMBLY NO. 3540044-0100 (YELLOW)
ASSEMBLY NO. 3540044-0200 (BLACK)

Revision	Date	Rev	By	Chk.	App.
ADDED BLACK OPTION, DWG NO. WAS 3540042-0100.	4/9/09	A	DK	KRM	MJB
ADD SHEET 2, PN 3540044-0100 & 3540044-0200.	5/22/09	B	DK	BK	BRE

DRAWN: D. Kohfeld	DATE: 2/26/2009
DESIGNED: M. Buehler	DATE: 12/30/2008
CHECKED: JME	DATE: 3/4/2009
APPROVED: MJB	DATE: 3/19/2009
FILE: 3540042-0000.idw	
NEXT ASSEMBLY:	

ENERGY ABSORPTION SYSTEMS, INC.
ENGINEERING AND RESEARCH DEPARTMENT

NOSE ASSY,QGII,48

SCALE:	DRAWING:	SHEET:	REV
	3540042-0000	2 of 2	B

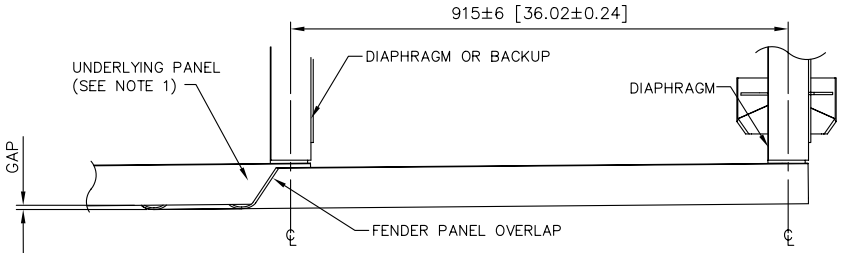

CAUTION
20 [0.78] MAX.
FOR PROPER IMPACT PERFORMANCE.

PLAN
SCALE = 1:8

PARTS LIST			
ITEM	STOCK NO.	DESCRIPTION	REQ'D
1	2760081-0000	PANEL,FENDER,QG,G	1.00
2	2699341-0000	BOLT,RAIL,5/8X2,G	2.00
3	2704191-0000	NUT,HX,5/8,G,RAIL	2.00
4	2708841-0000	WASHER,MUSHROOM,CAST,QG,G	1.00
5	2706604-0000	SCREW,FL,5/8X5,G8,G,SOCKET	1.00
6	2704141-0000	NUT,HX,5/8,G	1.00
7	2708291-0000	WASHER,FLAT,5/8X1 3/4,G	1.00
8	2715343-0000	SPRING,DIE,1 1/4 OD X5/8X1 1/2	1.00

TWO FENDER PANEL ASSEMBLIES REQUIRED PER BAY.

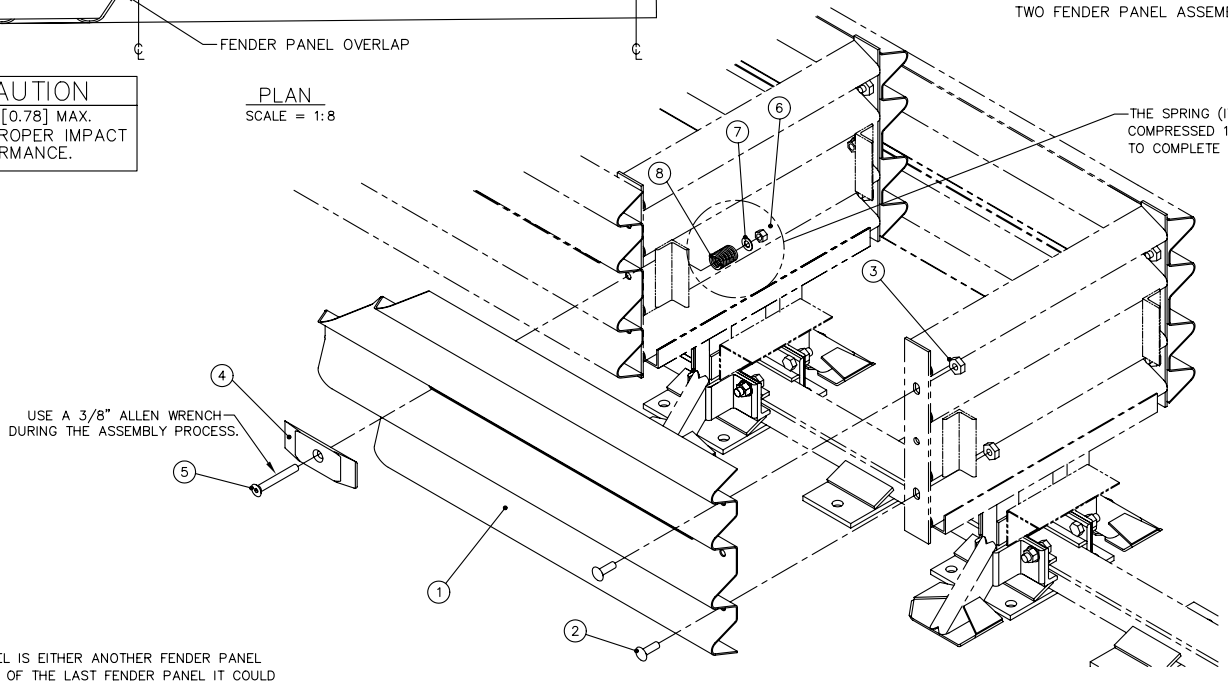

NOTES:
1. UNDERLYING PANEL IS EITHER ANOTHER FENDER PANEL OR, IN THE CASE OF THE LAST FENDER PANEL IT COULD BE A BACKUP SIDE PANEL, EXTENSION PANEL OR TRANSITION PANEL.
2. UNITS OF MEASUREMENT ARE IN MILLIMETERS [INCHES] UNLESS OTHERWISE NOTED.

ASSEMBLY NO. 3540040-0000

Revisions	Date	Rev.	By	Ckd.	App.
CORRECTED DIAPHRAGM SPACING	10/28/98	G	RGC	STT	KRM
DIAPHRAGM SPACING WAS FRONT TO FRONT	11/26/01	H	DDW	JME	DMO
8 WAS 2021611-0000, 7 QTY WAS 4.0	4/22/04	I	DK	JME	AC

REFERENCES

DRAWN: J. Espinoza	DATE: 5/21/96		
DESIGNED: JVM/MHO	DATE: 3/1/96		
CHECKED: S. Trageser	DATE: 5/21/96		
APPROVED: J. Machado	DATE: 5/21/96		
CAD FILE: 354004.dwg			
NEXT ASSEMBLY: ALL MODELS			

ENERGY ABSORPTION SYSTEMS, INC.
ENGINEERING AND RESEARCH DEPARTMENT

QUADGUARD® SYSTEM

FENDER PANEL ASSY, QG

SCALE	DWG.	SHEET	REV
1:12	35-40-04	1 of 1	I

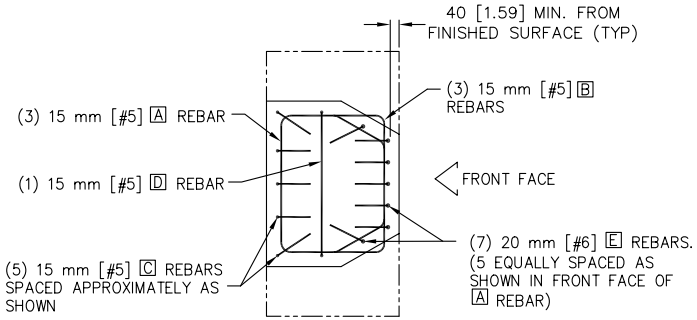

MONOLITH TOP VIEW
REINFORCEMENT DETAIL

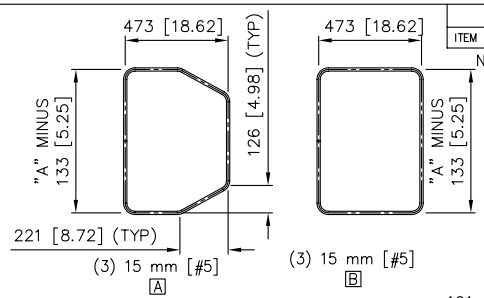

REBAR DETAIL

PARTS LIST			
ITEM	STOCK NO.	DESCRIPTION	REQ'D

NOTES:

1. BACKUP MUST BE ABLE TO WITHSTAND A MAXIMUM OVERTURNING MOMENT OF 230 kNm [2000 KIP–IN] AT DECK LINE FOR A DURATION OF 40± ms.
2. 28 MPa [4000 PSI] PORTLAND CEMENT CONCRETE REQUIRED.
3. LINEAR TOLERANCES TO BE ±6 [0.25].
4. UNITS OF MEASUREMENT ARE MILLIMETERS [INCHES] UNLESS OTHERWISE NOTED.
5. BACKUP MUST BE POURED MONOLITHICALLY WITH FOOTING AND PAD UNLESS EXISTING SURFACE IS APPROVED CONCRETE (SEE SHEET 2, NOTE 4).

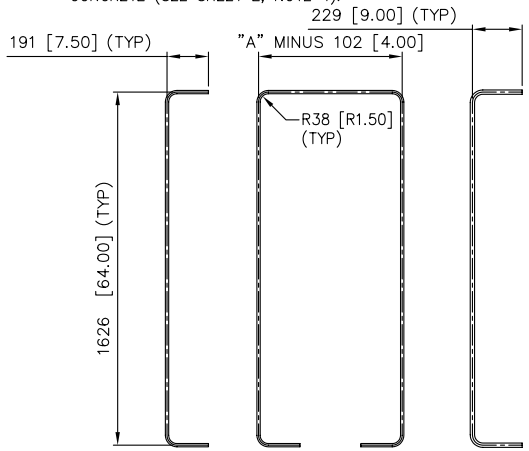

(5) 15 mm [#5] C
(1) 15 mm [#5] D
(7) 20 mm [#6] E

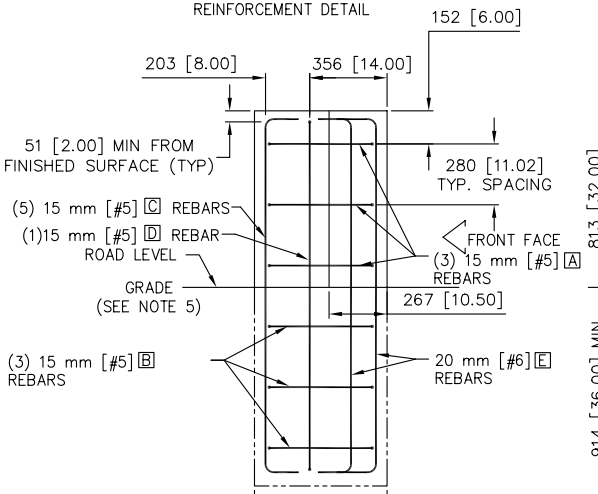

MONOLITH SIDE VIEW
REINFORCEMENT DETAIL

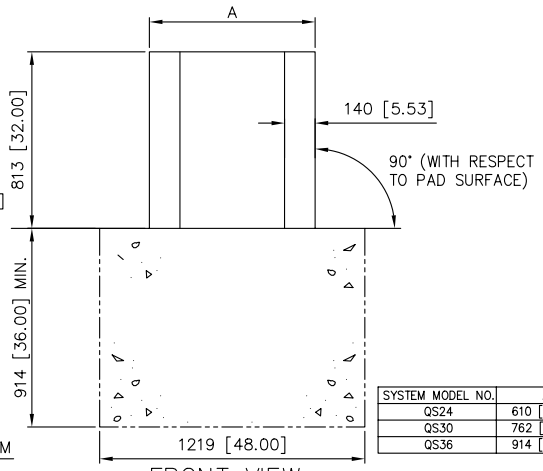

FRONT VIEW

SYSTEM MODEL NO.	A	NEXT ASSY #	CONCRETE IN BACKUP	CONCRETE IN FOOTING	REBAR #5 (15 mm)	REBAR #6 (20 mm)
QS24	610 [24.00]	3540141–0000	.30 m³ [0.4 YD³]	0.7 m³ [.9 YD³]	25 m [82.5 ft]	14 m [47 ft]
QS30	762 [30.00]	3540142–0000	.36 m³ [0.5 YD³]	0.7 m³ [.9 YD³]	27 m [87.8 ft]	
QS36	914 [36.00]	3540143–0000	.44 m³ [0.6 YD³]	0.7 m³ [.9 YD³]	29 m [96 ft]	

BACKUP ON GRADE (SEE NOTE 5)

Revisions	Date	Rev.	By	Ckd.	App.
ADDED "ON GRADE" TO TITLE	10/14/97	F	TB	KM	SPT
REMOVED ONE A REBAR & ONE B REBAR	01/19/99	G	SC	BB	SPT
INCREASED LENGTH OF ITEMS C & E	3/29/00	H	DK	BB	SPT

REFERENCES

DRAWN: D. Staus	DATE: 5/13/96		
DESIGNED: WGK	DATE: 3/1/96		
CHECKED: S. Trageser	DATE: 5/29/96		
APPROVED: W. G. Krage	DATE: 5/29/96		
CAD FILE: 354008.dwg			
NEXT ASSEMBLY: 35–40–14			

ENERGY ABSORPTION SYSTEMS, INC.
ENGINEERING AND RESEARCH DEPARTMENT

QUADGUARD® SYSTEM
CONCRETE BACKUP,QG
ON GRADE

SCALE	DWG.	SHEET	REV
1:20	35–40–08	1 of 2	H

SYSTEM MODEL NO.	A	NEXT ASSY #	CONCRETE	REBAR #5 (15 mm)	REBAR #6 (20 mm)
QS24	610 [24.00]	3540141-0000	.30 m³ [0.4 YD³]	15.5 m [50 ft]	10 m [31 ft]
QS30	762 [30.00]	3540142-0000	.36 m³ [0.5 YD³]	16.5 m [53.5 ft]	
QS36	914 [36.00]	3540143-0000	.44 m³ [0.6 YD³]	17.5 m [54.7 ft]	

PARTS LIST

ITEM	STOCK NO.	DESCRIPTION	REQ'D

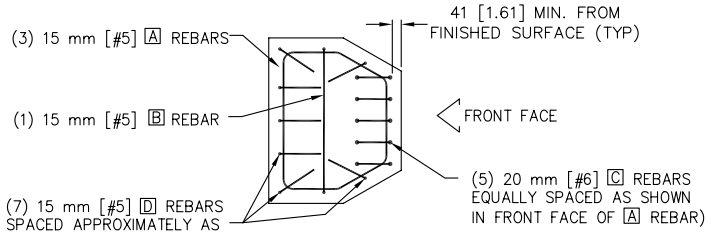

DOWEL TOP VIEW
REINFORCEMENT DETAIL

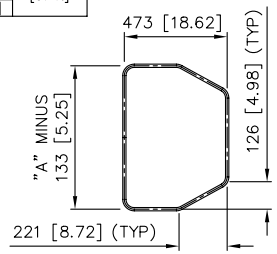

(3) 15 mm [#5]
A

REBAR DETAIL

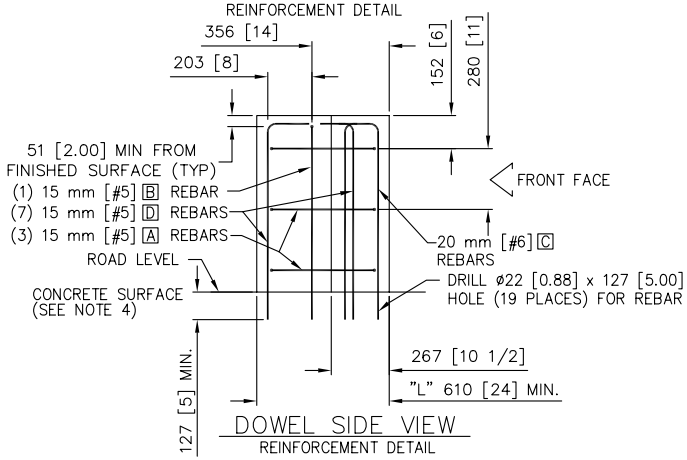

DOWEL SIDE VIEW
REINFORCEMENT DETAIL

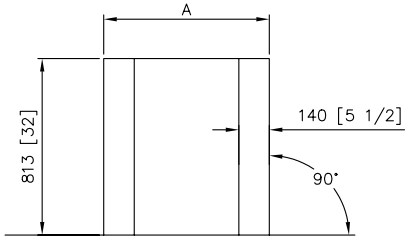

FRONT VIEW

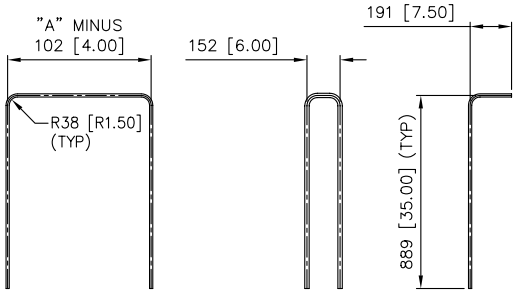

(1) 15 mm [#5] B
(5) 20 mm [#6] C
(7) 15 mm [#5] D

DOWEL REBAR DETAIL

NOTES:

1. 28 MPa [4000 PSI] PORTLAND CEMENT CONCRETE REQUIRED.
2. LINEAR TOLERANCES TO BE ±6 [0.25].
3. UNITS OF MEASUREMENT ARE MILLIMETERS [INCHES] UNLESS OTHERWISE NOTED.
4. APPROVED CONCRETE SURFACE IS:
   a. MIN. 180 [7.00] DECK STRUCTURE.
   b. MIN. 200 [8.00] NON-REINFORCED ROADWAY.
   c. MIN. 150 [6.00] REINFORCED ROADWAY.
5. VERTICAL REBAR TO BE INSTALLED USING MP-3® ANCHORING SYSTEM GROUT OR EQUAL. (AS DETAILED, IT WOULD REQUIRE QTY. 2 PART NO. 3525100-0000 MP-3®, QUART PACKAGE)

BACKUP ON APPROVED CONCRETE (SEE NOTES 1 & 4)

Revisions	Date	Rev.	By	Ckd.	App.
ADDED "ON EXISTING..." TO TITLE	10/14/97	F	TB	KM	SPT
REMOVED ONE "A" REBAR	01/19/99	G	SC	BB	SPT
INCREASED LENGTH OF ITEMS C & D	3/29/00	H	DK	BB	SPT

REFERENCES

DRAWN: D. Staus	DATE: 5/13/96	
DESIGNED: WGK	DATE: 3/1/96	
CHECKED: S. Trageser	DATE: 5/29/96	
APPROVED: W. G. Krage	DATE: 5/29/96	
CAD FILE: 354008 Sh02.dwg		
NEXT ASSEMBLY: 35-40-14		

ENERGY ABSORPTION SYSTEMS, INC.
ENGINEERING AND RESEARCH DEPARTMENT

QUADGUARD® SYSTEM
CONCRETE BACKUP,QG
ON EXISTING CONCRETE STRUCTURE

SCALE	DWG.	SHEET	REV
1:20	35-40-08	2 of 2	H

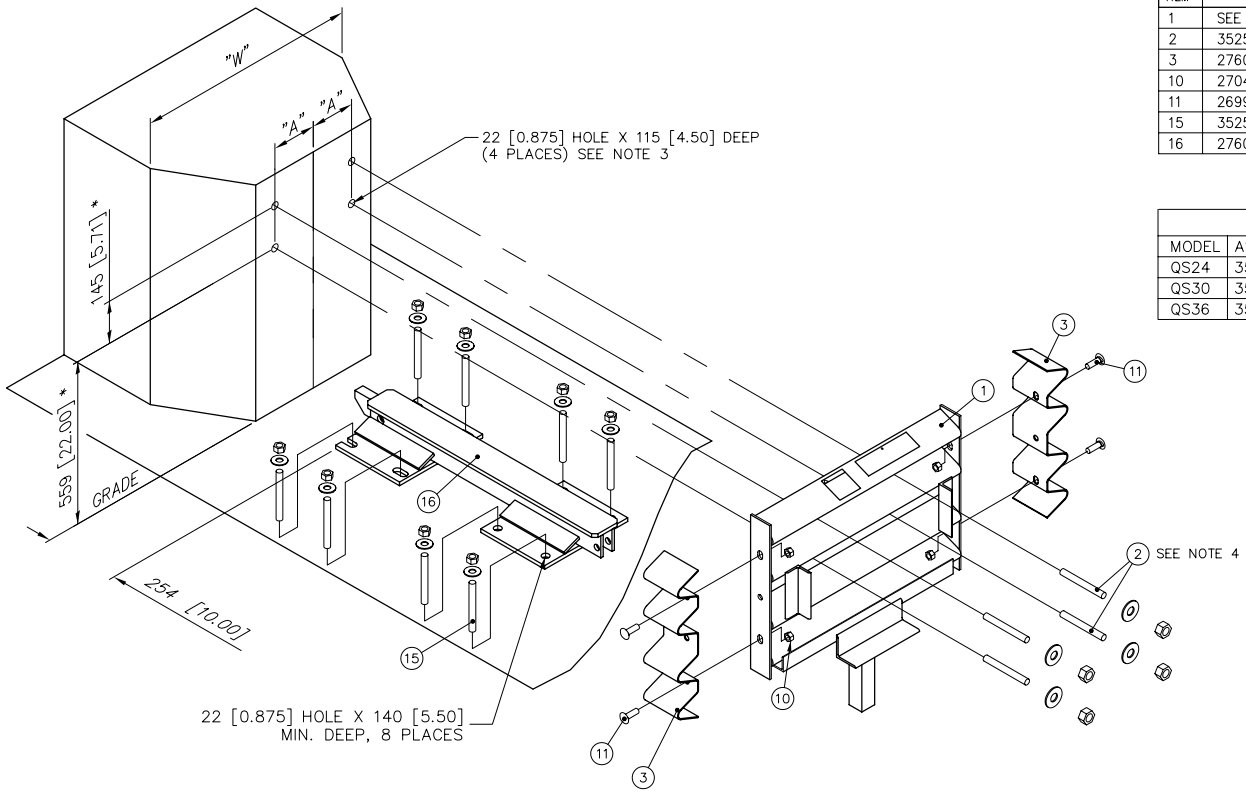

PARTS LIST			
ITEM	STOCK NO.	DESCRIPTION	REQ'D
1	SEE TABLE	BACKUP,CONCRETE,FRONT FACE,QG	1.00
2	3525130–0000	ANCHOR,MP–3,PT KIT,3/4X6 1/2 HOR	1.00
3	2760141–0000	PANEL,SIDE,QG,G	2.00
10	2704191–0000	NUT,HX,5/8,G,RAIL	4.00
11	2699341–0000	BOLT,RAIL,5/8X2,G	4.00
15	3525300–0000	ANCHOR,MP–3,PT KIT,3/4X7 VT	2.00
16	2760051–0000	MONORAIL,ONE BAY,QG,G	1.00

TABLE				
MODEL	ASSEMBLY NO.	"W"	"A"*	ITEM 1
QS24	3540141–0000	610 [24.00]	140 [5.50]	2760181–0000
QS30	3540142–0000	762 [30.00]	152 [6.00]	2760191–0000
QS36	3540143–0000	914 [36.00]	191 [7.50]	2760201–0000

NOTES:
1. DIMENSIONS ARE IN MILLIMETERS [INCHES] UNLESS OTHERWISE NOTED.
*2. FOR REFERENCE ONLY. USE ITEM 1 AS A TEMPLATE TO DRILL HOLES IN CONCRETE.
3. A REBAR CUTTING BIT WILL LIKELY BE REQUIRED TO ACHIEVE PROPER ANCHOR INSTALLATION.
4. STUDS LOCATED IN UPPER VALLEY WILL NEED TO EXTEND APPROX. 57 [2.25] FROM FACE OF CONCRETE IN ORDER TO GET NUTS ON. WASHERS MAY BE OMITTED.

UNI–DIRECTIONAL
ASSEMBLY NO. (SEE TABLE)

REFERENCES

CONCRETE BACKUP,QG 35–40–08

Revisions	Date	Rev.	By	Ckd.	App.
BACKUP HAD 2 LEGS	08/03/99	H	LWC	KM	BB
DEL ITEMS 4,6,7,8,&9,UPDATED CART SUPPORT	11/04/97	F	RGC	KRM	DLJ
ADDED LEGS AND NOTES 3 & 4	2/8/99	G	DLS	KM	SPT

DRAWN: D. Staus	DATE: 5/24/96		
DESIGNED: W. Krage	DATE: 3/1/96		
CHECKED: S. Trageser	DATE: 6/5/96		
APPROVED: W. Krage	DATE: 6/5/96		
CAD FILE: 354014.dwg			
NEXT ASSEMBLY:			

ENERGY ABSORPTION SYSTEMS, INC.
ENGINEERING AND RESEARCH DEPARTMENT

QUADGUARD® SYSTEM

BACKUP ASSY,CONCRETE,QG

SCALE	DWG.	SHEET	REV
1:15	35–40–14	1 of 1	H

TABLE "L"						
ASSEMBLY NO.	TOTAL RAIL LENGTH	*ITEM 1	*ITEM 2	*ITEM 3	*ITEM 5	NO. OF BAYS
3540060–0100	0	0	0	0	0	1
3540060–0200	915 [36.0]	1	0	0	2	2
3540060–0300	1830 [72.0]	0	1	0	3	3
3540060–0400	2745 [108.1]	0	0	1	4	4
3540060–0500	3660 [144.1]	1	0	1	5	5
3540060–0600	4575 [180.1]	0	1	1	6	6
3540060–0700	5490 [216.1]	0	0	2	7	7
3540060–0800	6405 [252.1]	1	0	2	8	8
3540060–0900	7320 [288.2]	0	1	2	9	9

NOT APPLICABLE FOR 69" & 90" OR CZ QG SYSTEMS

PARTS LIST			
ITEM	STOCK NO.	DESCRIPTION	REQ'D
1	2760051–0000	MONORAIL,ONE BAY,QG,G	*
2	2760061–0000	MONORAIL,TWO BAYS,QG,G	*
3	2760071–0000	MONORAIL,THREE BAYS,QG,G	*
4	2760041–0000	END CAP,MONORAIL,QG,G	1.00
5	3525300–0000	ANCHOR,MP–3,PT–KIT,3/4X7,VT	*
6	2699571–0000	BOLT,HX,5/8X3 1/2,G5,G	1.00
7	2704141–0000	NUT,HX,5/8,G	1.00
8	2708231–0000	WASHER,LOCK,5/8,G	1.00

* SEE TABLE

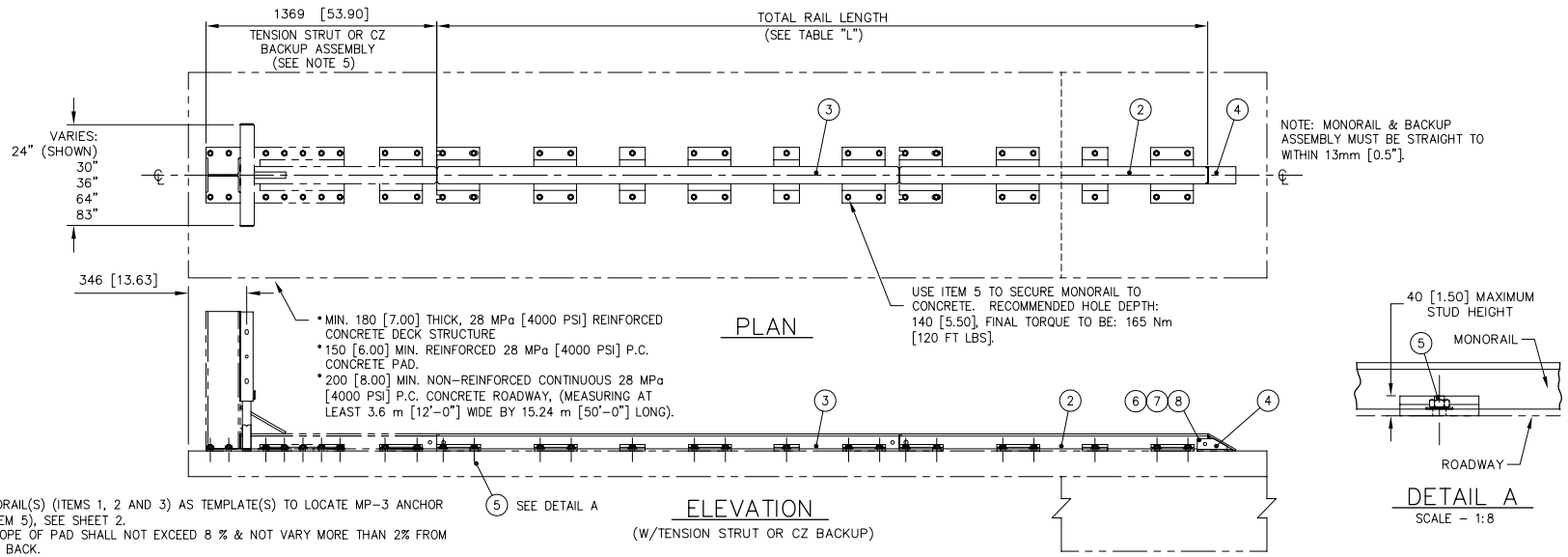

NOTES:
1. USE MONORAIL(S) (ITEMS 1, 2 AND 3) AS TEMPLATE(S) TO LOCATE MP–3 ANCHOR BOLTS (ITEM 5), SEE SHEET 2.
2. CROSS SLOPE OF PAD SHALL NOT EXCEED 8 % & NOT VARY MORE THAN 2% FROM FRONT TO BACK.
3. UNITS OF MEASUREMENT ARE MILLIMETERS [INCHES] UNLESS OTHERWISE NOTED.
4. EVERY STUD MUST BE EMBEDDED TO A DEPTH OF 140 [5.5]. IF REBAR IS ENCOUNTERED IN A P.C. CONCRETE PAD, DRILL THROUGH IT. IF REBAR IS ENCOUNTERED ON A DECK STRUCTURE, ASK PROJECT ENGINEER FOR DIRECTION.
5. FOR CZ SYSTEMS, SEE DRAWING 35–40–24 ALSO.

ASSEMBLY NO. SEE TABLE L

Revisions	Date	Rev.	By	Ckd.	App.

REFERENCES

DRAWN: W. Leddington	DATE: 5/27/09
DESIGNED: ---	DATE: ---
CHECKED: S. Trageser	DATE: 5/28/09
APPROVED: M.J. Buehler	DATE: 5/28/09
CAD FILE: 354075.dwg	
NEXT ASSEMBLY:	

ENERGY ABSORPTION SYSTEMS, INC.
ENGINEERING AND RESEARCH DEPARTMENT

QUADGUARD® SYSTEM

MONORAIL ASSY, QG II

SCALE	DWG.	SHEET	REV
N.T.S.	35–40–75	1 of 3	–

PARTS LIST			
ITEM	STOCK NO.	DESCRIPTION	REQ'D

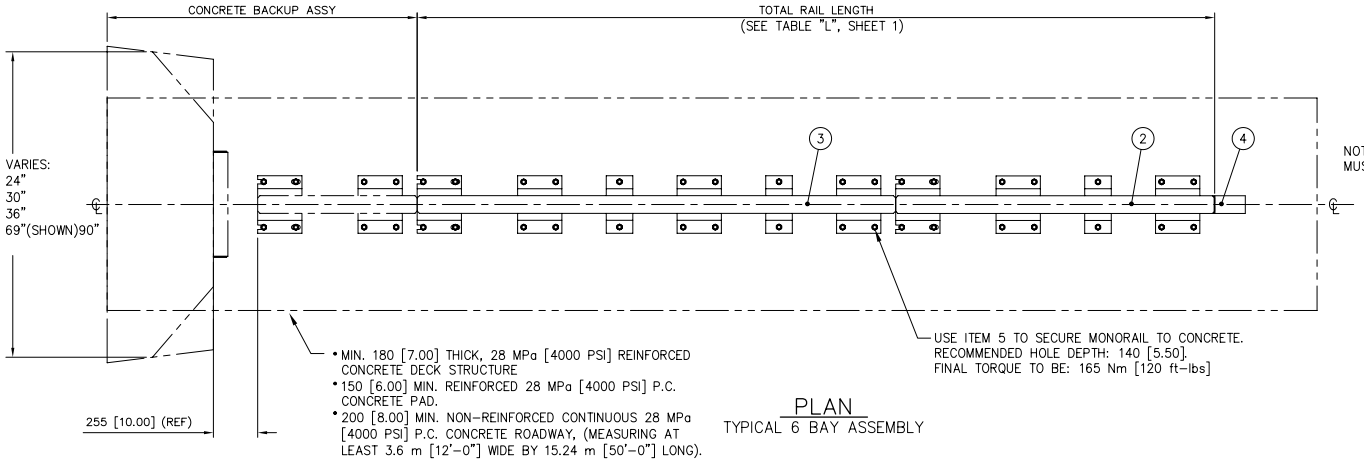

PLAN
TYPICAL 6 BAY ASSEMBLY

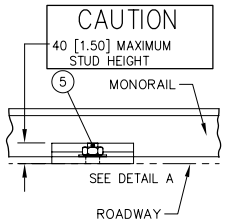

DETAIL A

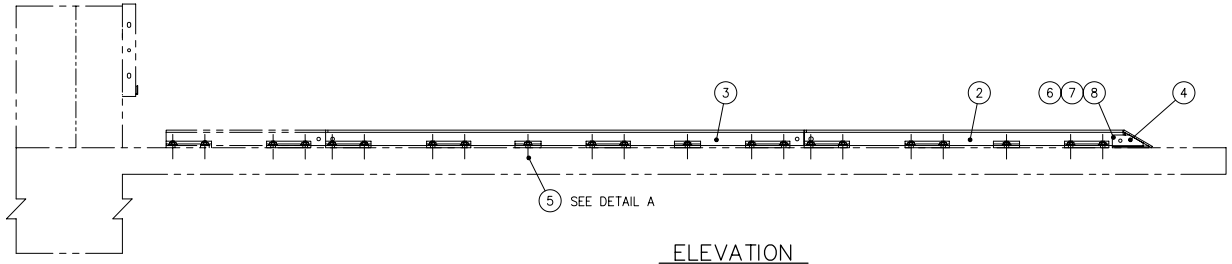

ELEVATION
(W/CONCRETE BACKUP)

ASSEMBLY NO. SEE TABLE L ON SHEET 1

Revisions	Date	Rev.	By	Ckd.	App.

REFERENCES

DRAWN: W. Leddington	DATE: 5/27/09		
DESIGNED: ---	DATE: ---		
CHECKED: S. Trageser	DATE: 5/28/09		
APPROVED: M.J. Buehler	DATE: 5/28/09		
CAD FILE: 354075-02.dwg			
NEXT ASSEMBLY:			

ENERGY ABSORPTION SYSTEMS, INC.
ENGINEERING AND RESEARCH DEPARTMENT

QUADGUARD® SYSTEM

MONORAIL ASSY, QG II

SCALE	DWG.	SHEET	REV
N.T.S.	35-40-75	2 of 3	

PARTS LIST			
ITEM	STOCK NO.	DESCRIPTION	REQ'D

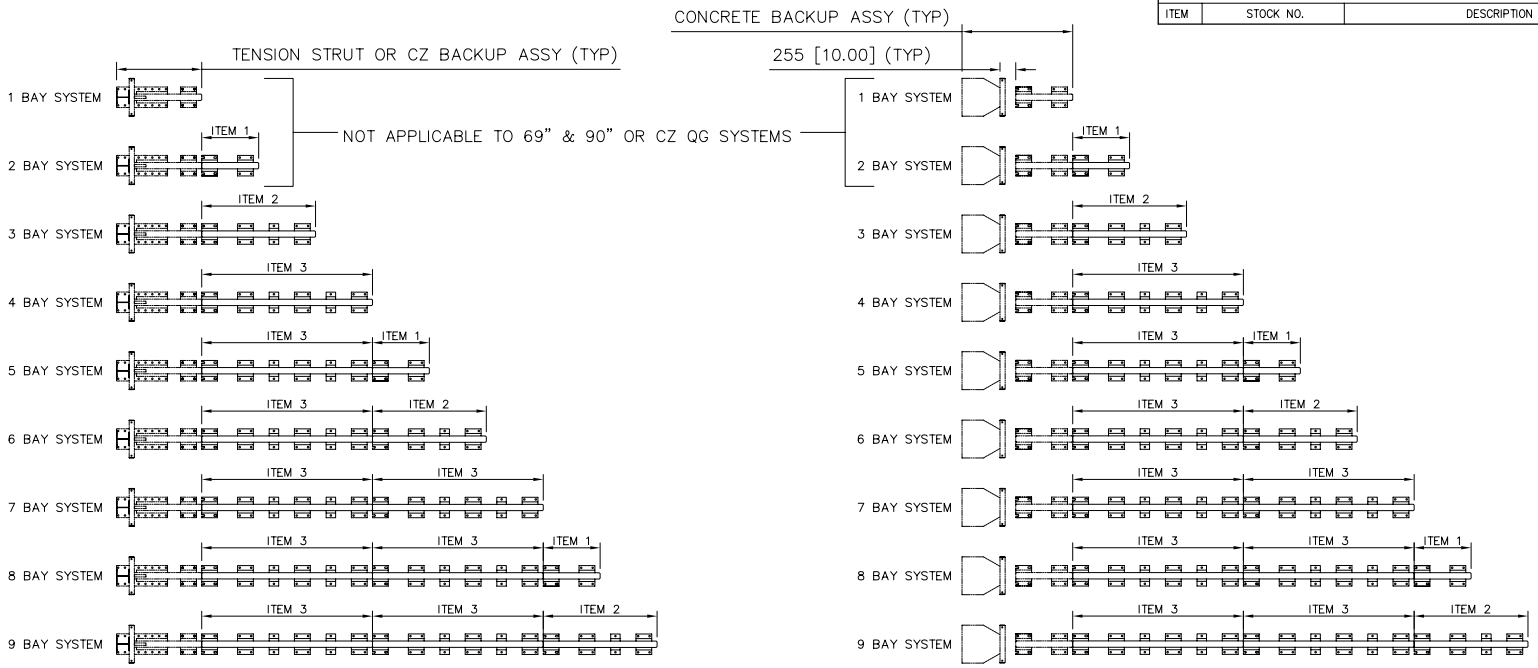

ASSEMBLY NO. (SEE TABLE "L" ON SHEET 1)

Revisions	Date	Rev.	By	Ckd.	App.

REFERENCES

DRAWN: W. Leddington	DATE: 5/27/09		
DESIGNED: ---	DATE: ---		
CHECKED: S. Trageser	DATE: 5/28/09		
APPROVED M.J. Buehler	DATE: 5/28/09		
CAD FILE: 354075-03.dwg			
NEXT ASSEMBLY:			

ENERGY ABSORPTION SYSTEMS, INC.
ENGINEERING AND RESEARCH DEPARTMENT

QUADGUARD® SYSTEM

MONORAIL ASSY, QG II

SCALE	DWG.	SHEET	REV
N.T.S.	35-40-75	3 of 3	

TABLE "L"							YARDS OF CONCRETE IN PAD
NO. OF BAYS	"L" (PAD LENGTH)		REBAR REQUIRED				
	m		m		m^3	[YARDS^3]
1	1.68	[5'-6"]	9.73	[38'-4"]	0.37	[0.5]
2	2.59	[8'-6"]	15.44	[57'-8"]	0.52	[0.7]
3	3.51	[11'-6"]	20.40	[73'-4"]	0.66	[0.9]
4	4.42	[14'-6"]	26.29	[92'-8"]	0.83	[1.1]
5	5.33	[17'-6"]	31.07	[108'-4"]	1.05	[1.4]
6	6.25	[20'-6"]	36.96	[127'-8"]	1.21	[1.6]
7	7.16	[23'-6"]	41.73	[143'-4"]	1.36	[1.8]
8	8.08	[26'-6"]	47.63	[162'-8"]	1.51	[2.0]
9	8.99	[29'-6"]	52.40	[178'-4"]	1.74	[2.3]

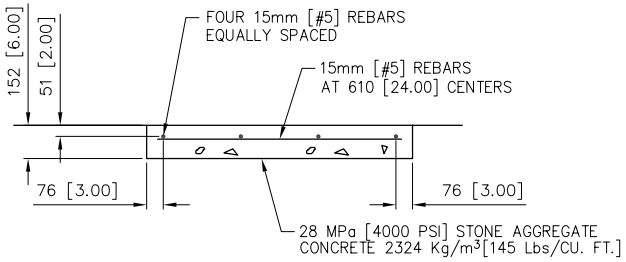

SECTION A–A

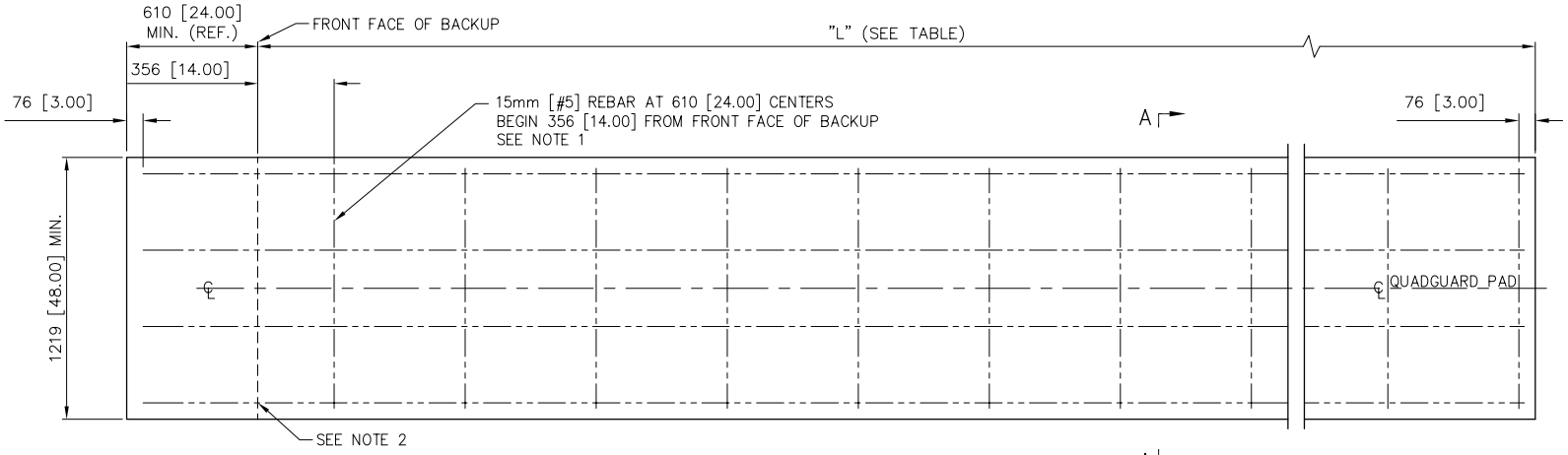

PLAN VIEW

NOTES:

1. CROSS SLOPE OF PAD SHALL NOT EXCEED 8%, AND NOT VARY MORE THAN 2% FROM FRONT TO BACK.
2. PAD AND BELOW GRADE BACKUP BLOCK SHOULD BE TIED TOGETHER & POURED MONOLITHICALLY.
3. DIMENSIONS ARE IN mm [INCHES] UNLESS OTHERWISE NOTED.

Revisions	Date	Rev.	By	Ckd.	App.

REFERENCES

DRAWN:	W. Leddington	DATE:	5/27/09
DESIGNED:	---	DATE:	---
CHECKED:	S. Trageser	DATE:	5/28/09
APPROVED	M.J. Buehler	DATE:	5/28/09
CAD FILE:	354077.dwg		
NEXT ASSEMBLY:			

ENERGY ABSORPTION SYSTEMS, INC.
ENGINEERING AND RESEARCH DEPARTMENT

QUADGUARD™ II SYSTEM

CONCRETE PAD,FOR CONC. BACKUP,QG

SCALE	DWG.	SHEET	REV
1:20	35-40-77	1 of 1	

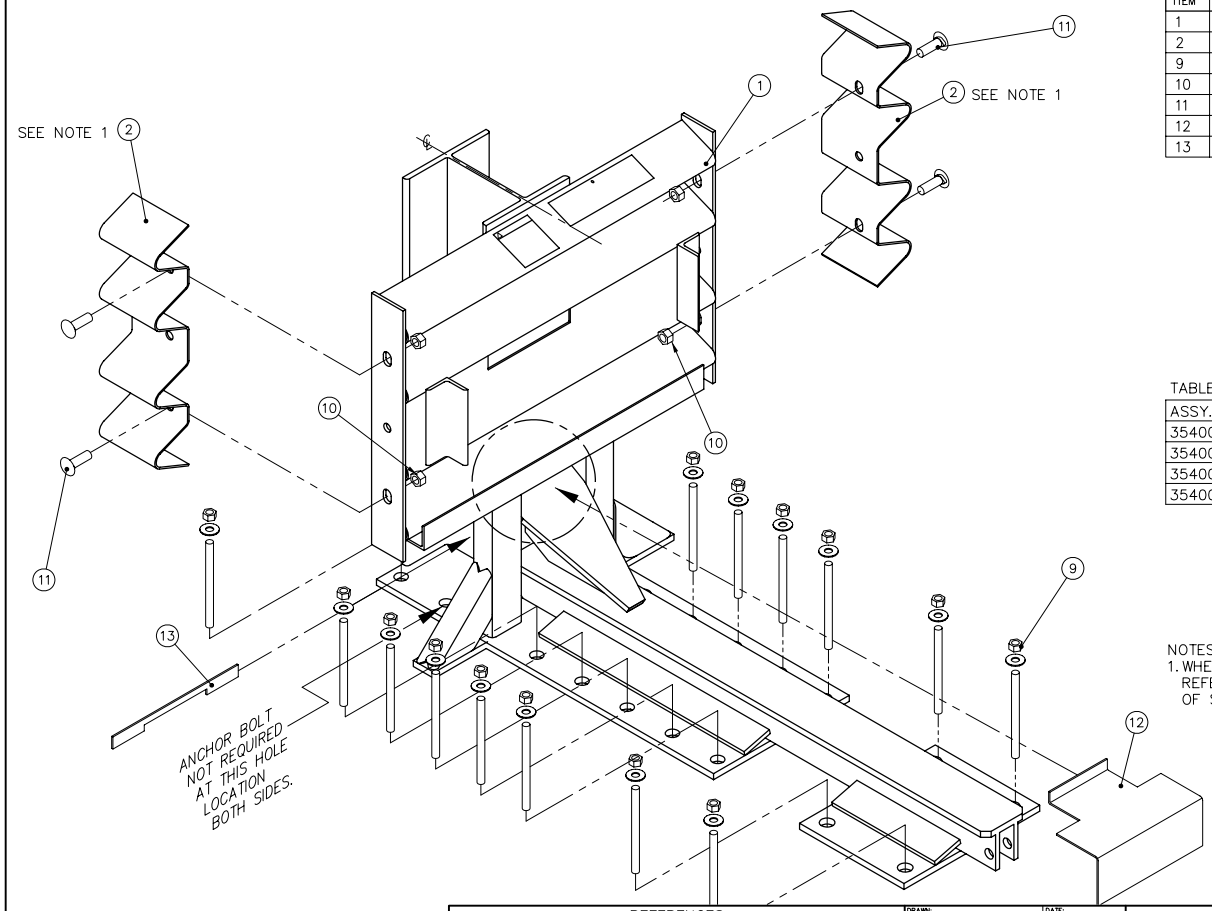

PARTS LIST

ITEM	STOCK NO.	DESCRIPTION	REQ'D
1	SEE TABLE A	BACKUP,TS,QG,G	1.00
2	2760141–0000	PANEL,SIDE,QG,G	2.00
9	3525300–0000	ANCHOR,MP–3,PT–KIT,3/4X7,VT	3.00
10	2704191–0000	NUT,HX,5/8,G,RAIL	4.00
11	2699341–0000	BOLT,RAIL,5/8X2,G	4.00
12	2760293–0000	BRACKET,CARTRIDGE SUPPORT,TS B/U	1.00
13	2760294–0000	LOCKING BAR,CARTRIDGE SUPPORT	1.00

TABLE A

ASSY. NO.	STOCK NO.	DESCRIPTION	WIDTH
3540031–0000	2760011–0000	BACKUP,TS,24,QG,G	610 [24.00]
3540032–0000	2760021–0000	BACKUP,TS,30,QG,G	760 [30.00]
3540033–0000	2760031–0000	BACKUP,TS,36,QG,G	915 [36.00]
3540030–0000	2760044–0000	BACKUP,TS,48,QG,G	1219 [48.00]

NOTES:
1. WHEN TRANSITIONING QUADGUARD SYSTEM TO EXISTING BARRIER REFER TO THE TRANSITION ASSEMBLY DRAWINGS FOR PROPER USE OF SIDE PANEL PART NO. 2760141–0000.

ASSEMBLY NO. SEE TABLE A

REFERENCES

Revisions	Date	Rev.	By	Ckd.	App.
DEL ITEMS 3,5,6,7,&8,ADDED ITEMS 12 & 13, UPDATED RAIL END HOLES	10/21/97	E	RGC	KRM	DLJ
REMOVED 1 ANCHOR BOLT & ADDED NOTE	03/19/99	F	LWC	KM	SPT
ADDED 48" ASSY INFO INTO TABLE A	06/04/09	G	RJV	STT	RCB

DRAWN: S. LEWIS	DATE: 4–22–96		
DESIGNED: JVM/MHO	DATE: 3–1–96		
CHECKED: S. Trageser	DATE: 5/16/96		
APPROVED: J. Machado	DATE: 5/16/96		
CAD FILE: 354003.dwg			
NEXT ASSEMBLY:			

ENERGY ABSORPTION SYSTEMS, INC.
ENGINEERING AND RESEARCH DEPARTMENT

QUADGUARD® SYSTEM

BACKUP ASSY, TS, QG

SCALE	DWG.	SHEET	REV
N.T.S.	35–40–03	1 of 1	G

TABLE					YARDS OF CONCRETE IN PAD	
NO. OF BAYS	"L" (PAD LENGTH)		REBAR REQUIRED			
	[m]	[ft-in]	[m]	[ft-in]	m^3	[YARDS^3]
1	2.74	[9'-0"]	14.83	[48'-8"]	1.59	[2.1]
2	2.74	[9'-0"]	14.83	[48'-8"]	1.59	[2.1]
3	3.66	[12'-0"]	20.73	[68'-0"]	1.82	[2.4]
4	4.57	[15'-0"]	25.50	[83'-8"]	1.97	[2.6]
5	5.49	[18'-0"]	31.39	[103'-0"]	2.12	[2.8]
6	6.40	[21'-0"]	36.17	[118'-8"]	2.35	[3.1]
7	7.32	[24'-0"]	42.06	[138'-0"]	2.51	[3.3]
8	8.23	[27'-0"]	46.84	[153'-8"]	2.66	[3.5]
9	9.14	[30'-0"]	52.73	[173'-0"]	2.81	[3.7]

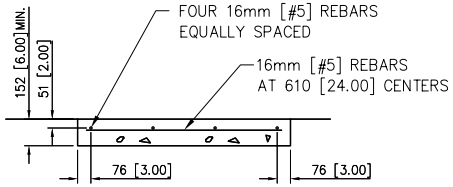

SECTION A–A

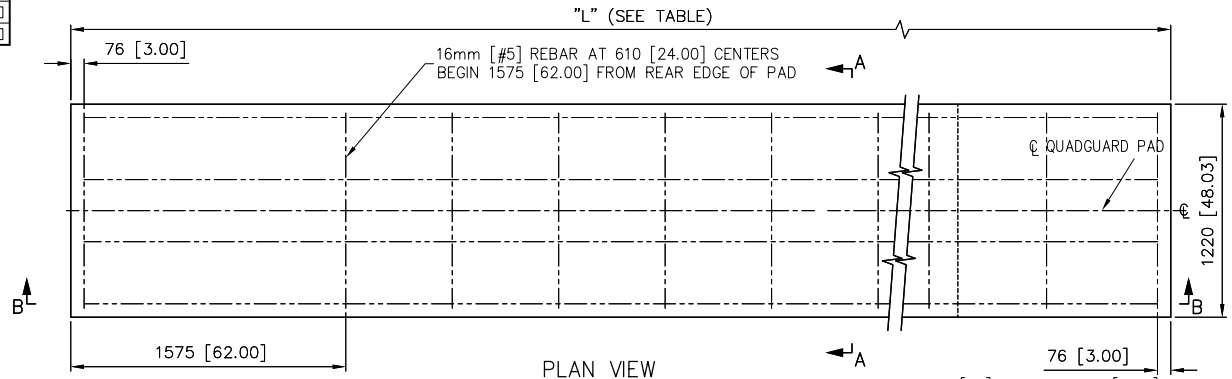

PLAN VIEW

PLACE 16mm [#5] REBAR AT 76 [3.00]
FROM EDGE FOR ALL PAD LENGTHS.

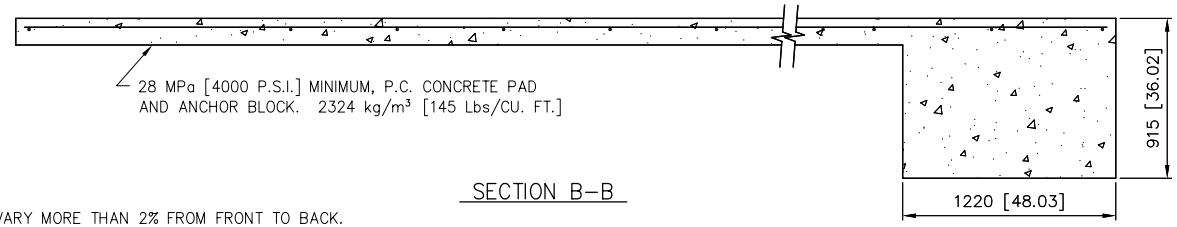

SECTION B–B

NOTES:

1. CROSS SLOPE OF PAD SHALL NOT EXCEED 8%, AND NOT VARY MORE THAN 2% FROM FRONT TO BACK.
2. UNITS OF MEASUREMENT ARE MILLIMETERS [INCHES] UNLESS OTHERWISE NOTED.

REFERENCES

Revisions	Date	Rev.	By	Ckd.	App.

DRAWN: W. Leddington	DATE: 5/27/09
DESIGNED: ---	DATE: ---
CHECKED: S. Trageser	DATE: 5/28/09
APPROVED: M.J. Buehler	DATE: 5/28/09
CAD FILE: 354076.DWG	
NEXT ASSEMBLY:	

ENERGY ABSORPTION SYSTEMS, INC.
ENGINEERING AND RESEARCH DEPARTMENT

QUADGUARD ® II SYSTEM
CONCRETE PAD FOR
TENSION STRUT BACKUP

SCALE	DWG.	SHEET	REV
NTS	35–40–76	1 of 2	

TABLE					YARDS OF CONCRETE IN PAD	
NO. OF BAYS	"L" (PAD LENGTH)		REBAR REQUIRED			
	[m]	[ft-in]	[m]	[ft-in]	m^3	[$YARDS^3$]
1	2. 74	[9′ -0″]	14. 83	[48′ -8″]	0. 7	[0. 9]
2	2. 74	[9′ -0″]	14. 83	[48′ -8″]	0. 7	[0. 9]
3	3. 66	[12′ -0″]	20. 73	[68′ -0″]	0. 9	[1. 2]
4	4. 57	[15′ -0″]	25. 50	[83′ -8″]	1. 2	[1. 5]
5	5. 49	[18′ -0″]	31. 39	[103′ -0″]	1. 4	[1. 8]
6	6. 40	[21′ -0″]	36. 17	[118′ -8″]	1. 6	[2. 1]
7	7. 32	[24′ -0″]	42. 06	[138′ -0″]	1. 8	[2. 4]
8	8. 23	[27′ -0″]	46. 84	[153′ -8″]	2. 1	[2. 7]
9	9. 14	[30′ -0″]	52. 73	[173′ -0″]	2. 3	[3. 0]

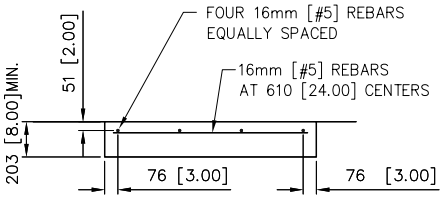

SECTION C–C

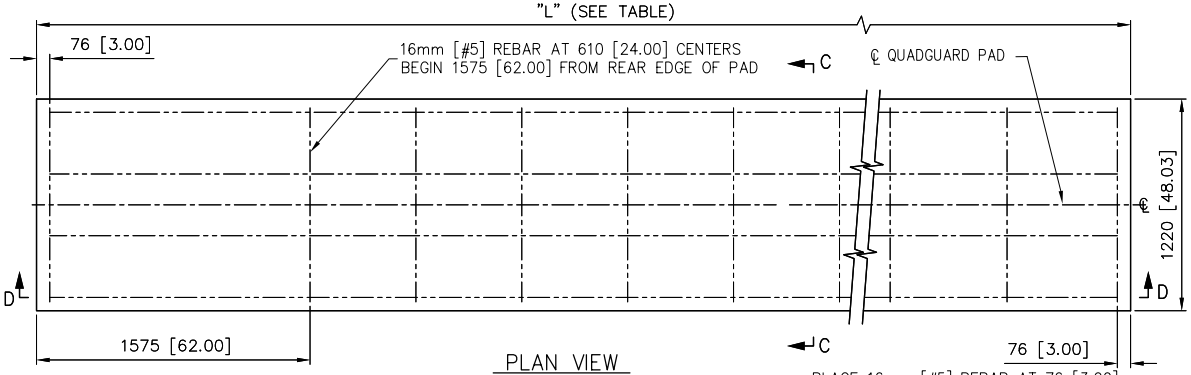

PLAN VIEW

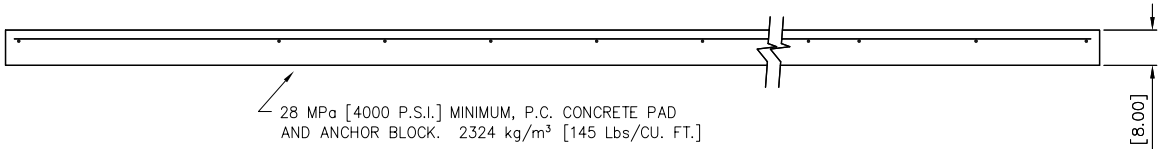

SECTION D–D

NOTES:

1. CROSS SLOPE OF PAD SHALL NOT EXCEED 8%, AND NOT VARY MORE THAN 2% FROM FRONT TO BACK.
2. TO PREVENT SLIDING DURING AN IMPACT, PAD MUST BE INSTALLED AGAINST OR TIED TO AN EXISTING STRUCTURE. OTHERWISE ADDITIONAL BELOW GRADE SUPPORTS MUST BE ADDED AS DETERMINED NECESSARY BY THE PROJECT ENGINEER.
3. UNITS OF MEASUREMENT ARE MILLIMETERS [INCHES] UNLESS OTHERWISE NOTED.

Revisions	Date	Rev.	By	Ckd.	App.

REFERENCES

DRAWN: W. Leddington	DATE: 5/27/09		
DESIGNED: ---	DATE: ---		
CHECKED: S. Trageser	DATE: 5/28/09		
APPROVED: M.J. Buehler	DATE: 5/28/09		
CAD FILE: 354076.dwg			
NEXT ASSEMBLY:			

ENERGY ABSORPTION SYSTEMS, INC.
ENGINEERING AND RESEARCH DEPARTMENT

QUADGUARD ® II SYSTEM
OPTIONAL 8" CONCRETE PAD
FOR TENSION STRUT BACKUP

SCALE	DWG.	SHEET	REV
NTS	35–40–76	2 of 2	

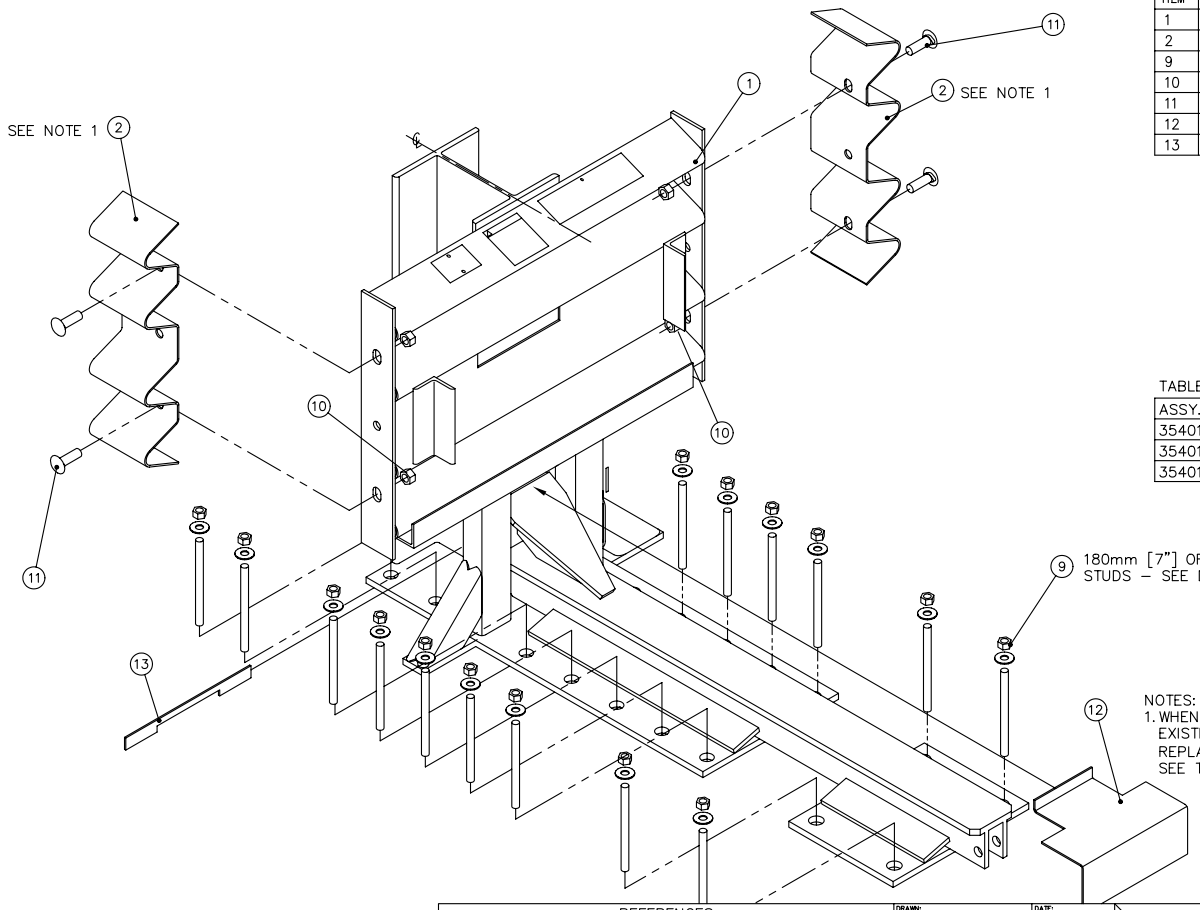

PARTS LIST

ITEM	STOCK NO.	DESCRIPTION	REQ'D
1	SEE TABLE A	BACKUP,CZ,QG,G	1.00
2	2760141–0000	PANEL,SIDE,QG,G	2.00
9	3525300–0000	ANCHOR,MP–3,PT–KIT,3/4X7,VT	3.00
10	2704191–0000	NUT,HX,5/8,G,RAIL	4.00
11	2699341–0000	BOLT,RAIL,5/8X2,G	4.00
12	2760293–0000	BRACKET,CARTRIDGE SUPPORT,TS B/U	1.00
13	2760294–0000	LOCKING BAR,CART SUPPORT,QG	1.00

TABLE A

ASSY. NO.	STOCK NO.	ITEM 1 DESCRIPTION	WIDTH
3540161–0000	276001Z–0000	BACKUP,CZ,24,QG,G	610 [2'–0"]
3540162–0000	276002Z–0000	BACKUP,CZ,30,QG,G	760 [2'–6"]
3540163–0000	276003Z–0000	BACKUP,CZ,36,QG,G	915 [3'–0"]

NOTES:
1. WHEN TRANSITIONING QUADGUARD SYSTEM TO EXISTING BARRIER, TRANSITION PANEL MAY REPLACE SIDE PANEL (PART NO. 2760141–0000). SEE TRANSITION ASSEMBLY DRAWING.

ASSEMBLY NO. SEE TABLE A

REFERENCES

Revisions	Date	Rev.	By	Ckd.	App.
DEL ITEMS 3,5,6,7,&8,ADDED ITEMS 12 &13	11/04/97	E	RGC	KRM	DLJ
DELETED ITEM 13 & 14. ITEM 15 BECAME 13	7/30/99	F	JE	BB	KM
ADDED STUD LENGTH NOTE	8/21/97	D	DLS	KM	SPT

DRAWN: D. Staus	DATE: 10/4/96		
DESIGNED: J. Machado	DATE: 10/15/96		
CHECKED: K. Mortensen	DATE: 10/14/96		
APPROVED S. Turner	DATE: 10/15/96		
CAD FILE: 3540161–0000.dwg			
NEXT ASSEMBLY:			

ENERGY ABSORPTION SYSTEMS, INC.
ENGINEERING AND RESEARCH DEPARTMENT

QUADGUARD™ SYSTEM

BACKUP ASSY, CZ, QG

SCALE	DWG.	SHEET	REV
N.T.S.	35–40–16	1 of 1	F

TABLE							YARDS OF CONCRETE IN PAD	
NO. OF BAYS	"L" (PAD LENGTH)		"P"		REBAR REQUIRED			
	m	[ft-in]	m	[ft-in]	m	[ft-in]	m^3	[YD^3]
2	4.57	[15'-0"]	1.1	[3'-9"]	25.50	[83'-8"]	1.2	[1.5]
3	4.57	[15'-0"]	1.1	[3'-9"]	25.50	[83'-8"]	1.2	[1.5]
4	4.57	[15'-0"]	1.1	[3'-9"]	25.50	[83'-8"]	1.2	[1.5]
5	5.49	[18'-0"]	1.4	[4'-6"]	31.39	[103'-0"]	1.4	[1.8]
6	6.40	[21'-0"]	1.6	[5'-3"]	36.17	[118'-8"]	1.6	[2.1]
7	7.32	[24'-0"]	1.8	[6'-0"]	42.06	[138'-0"]	1.8	[2.4]
8	8.23	[27'-0"]	2.0	[6'-9"]	46.84	[153'-8"]	2.1	[2.7]
9	9.14	[30'-0"]	2.2	[7'-6"]	52.73	[173'-0"]	2.3	[3.0]

OPTIONAL LIFTING POINTS: USE 13mm [1/2"] PROOF COIL CHAIN. THE CHAIN MUST MEET THE REQUIREMENTS OF ASTM A-413 GRADE 28. THE MINIMUM LENGTH CHAIN IS 15 LINKS AND THE REBAR WILL BE INSERTED THROUGH BOTH ENDS AS SHOWN.

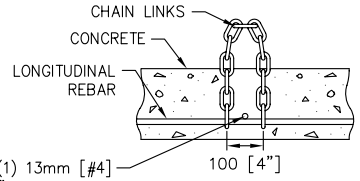

SECTION B-B

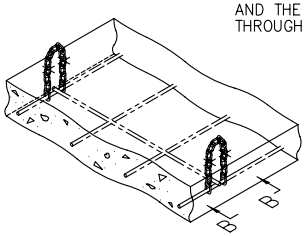

SECTION A-A

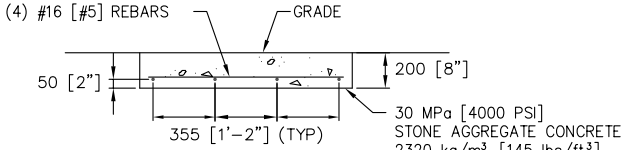

DETAIL A

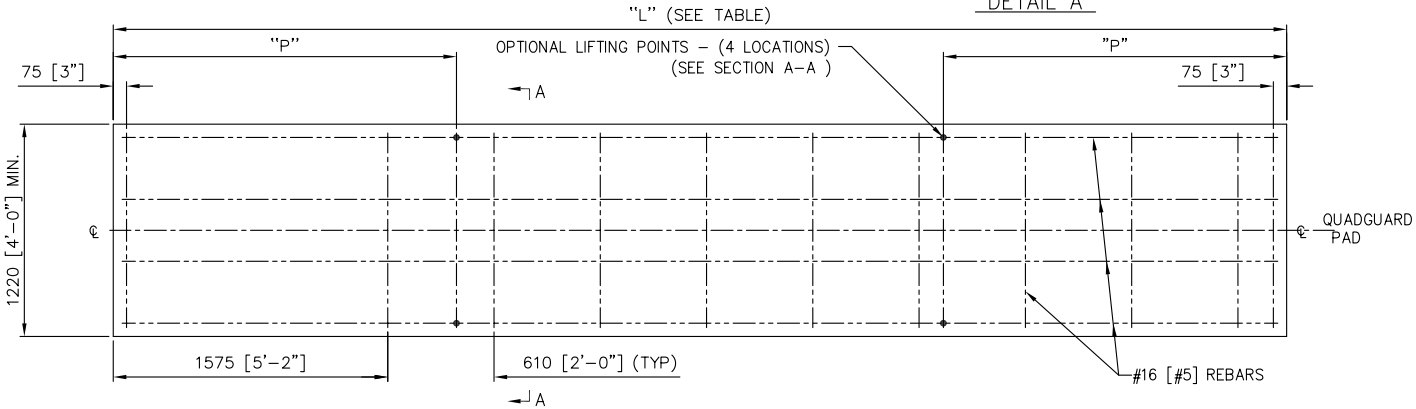

NOTE:

1. CROSS SLOPE OF PAD SHALL NOT EXCEED 8%, AND NOT VARY MORE THAN 2% FROM FRONT TO BACK.
2. TO PREVENT SLIDING DURING AN IMPACT, PAD MUST BE INSTALLED AGAINST OR TIED TO AN EXISTING STRUCTURE. OTHERWISE ADDITIONAL BELOW GRADE SUPPORTS MUST BE ADDED AS DETERMINED NECESSARY BY THE PROJECT ENGINEER.
3. UNITS OF MEASUREMENT ARE MILLIMETERS [INCHES] UNLESS OTHERWISE NOTED.

Revisions	Date	Rev.	By	Ckd.	App.
3 BAY PAD WAS 12' LONG	08/06/97	C	RH	BB	SPT
CHANGED PAD WIDTH TO 1220	11/19/97	D	DM	KM	SPT
ADDED 2 BAY TO PAD TABLE.	4/27/09	E	DK	JME	RCB

REFERENCES

DRAWN: D. Staus	DATE: 5/15/96		
DESIGNED: WGK	DATE: 3/1/96		
CHECKED: S. Trageser	DATE: 5/24/96		
APPROVED: WGK	DATE: 5/28/96		
CAD FILE: 354010.dwg			
NEXT ASSEMBLY:			

ENERGY ABSORPTION SYSTEMS, INC.
ENGINEERING AND RESEARCH DEPARTMENT

QUADGUARD™ SYSTEM

CONCRETE PAD,CZ,QG

SCALE	DWG.	SHEET	REV
1:20	35-40-10	1 of 1	E

NEXT ASSEMBLY: QSCZCVR

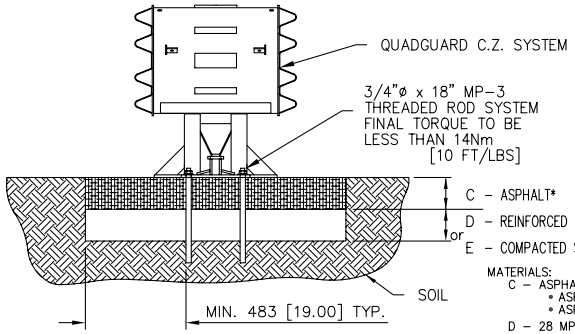

SECTION A–A

REFER TO QUADGUARD CZ ANCHORING SYSTEM INSTALLATION & SAFETY INSTRUCTIONS FOR FURTHER INFORMATION

MATERIALS:
- C – ASPHALTIC CONCRETE
  - ASPHALT BINDER AR-4000
  - ASPHALT AGGREGATE 3/4"(19mm) MAX., MED A B
- D – 28 MPa [4000 PSI] P. C. CONCRETE
- E – SUBBASE, PREPARED & COMPACTED
  - CLASS 2
  - 95% COMPACTION MINIMUM LAYER

DEPTH COMBINATION

"C"	"D"	"E"	REQ'D STUD LENGTH
--	152mm [6"]	--	180mm [7"]
76mm [3"]	76mm [3"]	--	460mm [18"]
152mm [6"]	--	152mm [6"]	460mm [18"]
203mm [8"]	--	--	460mm [18"]

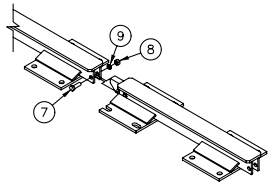

MONORAIL ATTACHMENT

SCALE – 1:25

PARTS LIST

ITEM	STOCK NO.	DESCRIPTION	REQ'D						
		BAYS →	3	4	5	6	7	8	9
1	2700731-0500	ROD,THREADED,3/4x18,G5,G	32	38	46	52	58	66	72
2	2704341-0000	NUT,HX,3/4,G,GR DH	32	38	46	52	58	66	72
3	2708081-0000	WASHER,FLAT,3/4X2,HVY,G	32	38	46	52	58	66	72
4	3525100-0000	MP-3,QUART PACKAGE	8	10	12	13	15	17	18
5	2760231-0000	BRACKET,LIFTING,QG,CZ	4	4	4	4	4	4	4
6	DELETED		–	–	–	–	–	–	–
7	2699571-0000	BOLT,HX,5/8X3 1/2,G5,G	1	1	2	2	2	3	3
8	2704141-0000	NUT,HX,5/8,G	1	1	2	2	2	3	3
9	2708231-0000	WASHER,LOCK,5/8,G	1	1	2	2	2	3	3
10	354024Z-0000	INST.,QG CZ ANCHOR/LIFT KIT	1	1	1	1	1	1	1
11	2735492-0000	LABEL,CRATE,QG CZ,LIFT KIT	1	1	1	1	1	1	1

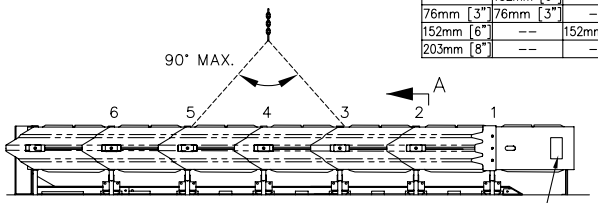

EXAMPLE:
6 BAY QUADGUARD cz
SCALE – 1:50

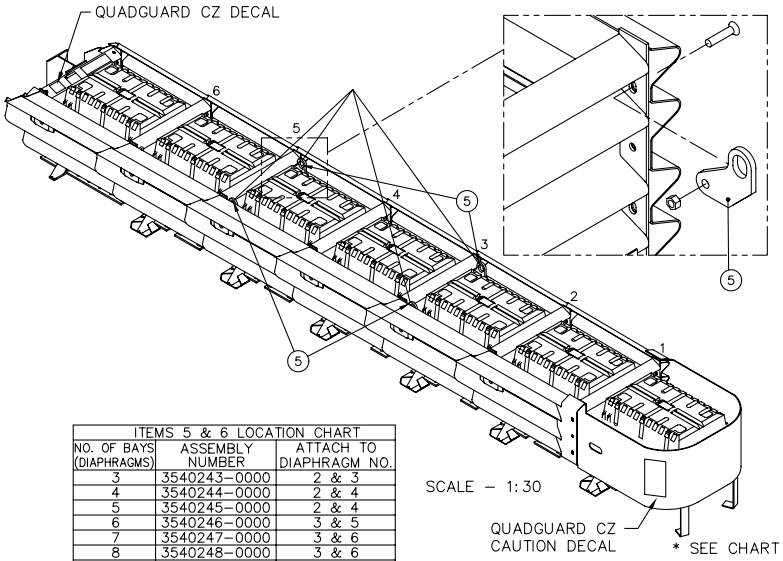

SCALE – 1:30

ASSY NO. 354024*-0000

ITEMS 5 & 6 LOCATION CHART

NO. OF BAYS (DIAPHRAGMS)	ASSEMBLY NUMBER	ATTACH TO DIAPHRAGM NO.
3	3540243-0000	2 & 3
4	3540244-0000	2 & 4
5	3540245-0000	2 & 4
6	3540246-0000	3 & 5
7	3540247-0000	3 & 6
8	3540248-0000	3 & 6
9	3540249-0000	4 & 7

TO MOVE SYSTEM:

1. Verify monorail sections are bolted together.
2. Attach two lifting brackets each on diaphragms listed (four brackets total). See example.
3. Minimum sling length 3 meters (9 ft). Use fixed equal length slings.
4. Free unit from anchor bolts & grout prior to lifting the system. To accomplish this, start at the nose of the system and use pry bars to gradually raise the system off of the studs. Place blocks such as 2X4's under the monorail and work down the length of unit until the unit is completely free of the studs.
5. Lift the system to new location and re-anchor.
6. ANCHOR SYSTEM FOR PROPER IMPACT PERFORMANCE. Use MP-3® polyester anchor system, supplied by Energy Absorption Systems, or approved equal. QuadGuard cz Systems installed on asphalt must be inspected to ensure the anchors are still properly set following each impact. Re-anchor as necessary. See drawing 35-40-06.

Revisions	Date	Rev.	By	Ckd.	App.	Q.C.
ITEM 4 WAS 3525210-0000	10/07/97	G	RGC	KRM	SPT	STT
REVISED TO SHOW NOSE BELT	5/17/99	H	DLS	BB	SPT	JMT

DRAWN: D. Staus	DATE: 10/7/96	ENERGY ABSORPTION SYSTEMS, INC. ENGINEERING AND RESEARCH DEPARTMENT
DESIGNED: B. Burgess	DATE: 10/15/96	QuadGuard® SYSTEM CZ ANCHOR/LIFTING KIT,QG, (3–9 BAYS)
CHECKED: K. Mortensen	DATE: 10/14/96	
APPROVED: S. Turner	DATE: 10/15/96	Instruction No. 354024Z-0000
Q.C.	DATE:	
CAD FILE: 354024.dwg		SCALE: AS NOTED · DWG. 35-40-24 · SHEET 1 of 2 · REV H

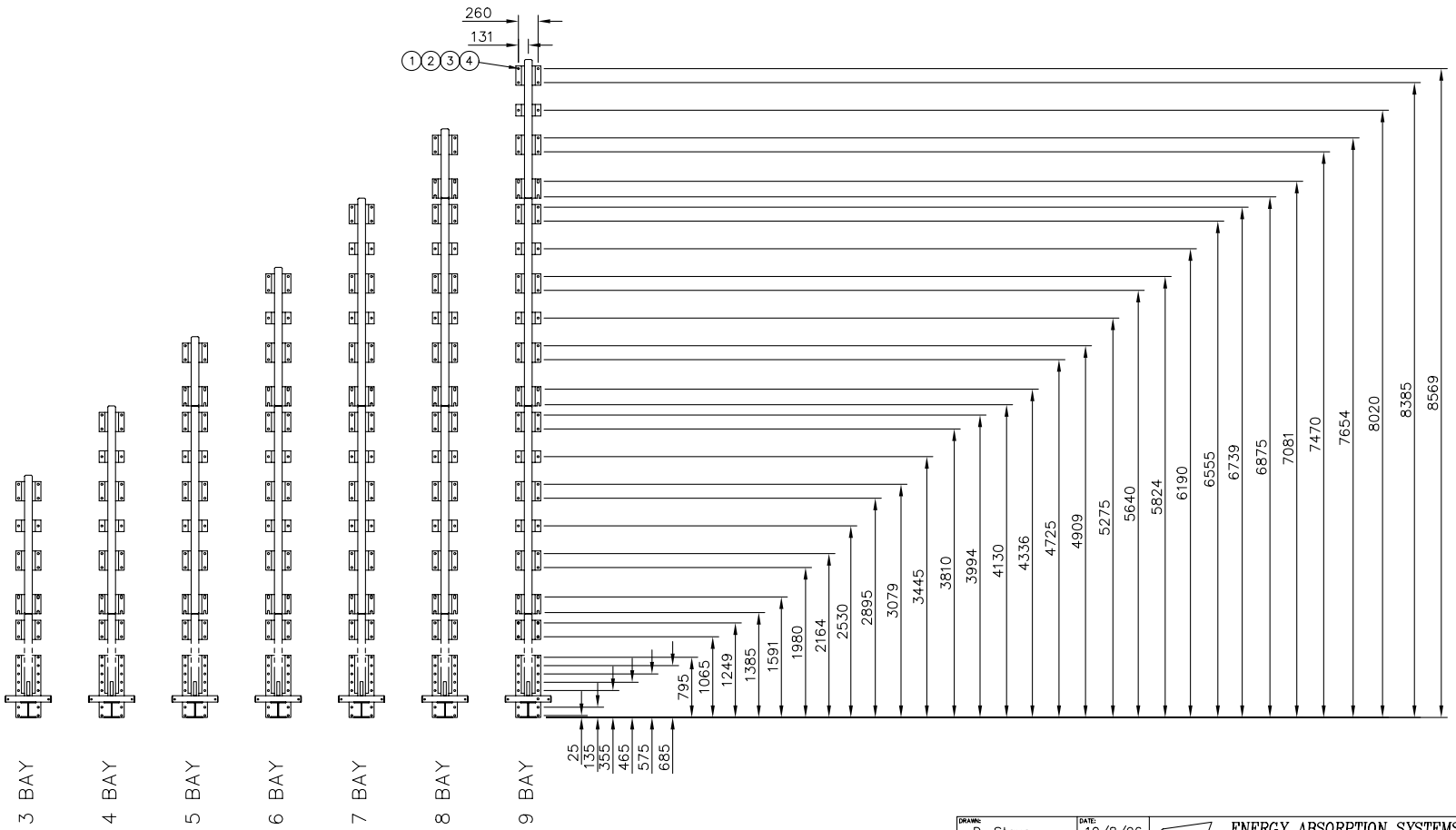

ANCHOR BOLT LOCATIONS

NOTES:
1. MANUFACTURER RECOMMENDS USING THE MONORAIL AND BACKUP AS A TEMPLATE FOR DRILLING HOLES. HOLE LOCATIONS ARE GIVEN HERE FOR REFERENCE PURPOSES ONLY.
2. UNITS ARE MILLIMETERS.

Revisions	Date	Rev.	By	Ckd.	App.	Q.C.
REV CHANGE TO MATCH SHEET 1	10/17/97	G	RGC	//	//	//
REV CHANGE TO MATCH SHEET 1	5/17/99	H	DLS	BB	SPT	JMT

DRAWN: D. Staus	DATE: 10/8/96	ENERGY ABSORPTION SYSTEMS, INC. ENGINEERING AND RESEARCH DEPARTMENT
DESIGNED: B. Burgess	DATE: 10/15/96	QuadGuard SYSTEM CZ ANCHOR/LIFTING KIT,QG, (3–9 BAYS)
CHECKED: K. Mortensen	DATE: 10/15/96	
APPROVED: S. Turner	DATE: 10/15/96	
Q.C.	DATE:	
CAD FILE: 354024–02.dwg	SCALE 1:50	DWG. 35–40–24 · SHEET 2 of 2 · REV H

TABLE		
ASSEMBLY NO.	ITEM 1	ITEM 1 DESCRIPTION
3540260–0000	2760381–0000	ANCHOR,PCMB,QG,G
3540261–0000	2760961–0000	ANCHOR,BARRIER,F–SHAPE,G

PARTS LIST			
ITEM	STOCK NO.	DESCRIPTION	REQ'D
1	SEE TABLE	SEE TABLE	6.00
2	3525210–0000	ANCHOR,MP–3,QUART KIT,CZ	3.00
3	2700731–0500	ROD THREADED 3/4X18, G5,G	12.00
4	3525130–0000	ANCHOR, MP–3,PT KIT,3/4X6 1/2 HOR	2.00
5	354026Z–0000	INSTRUCTIONS, PCMB ANCHOR ASSY.	1.00

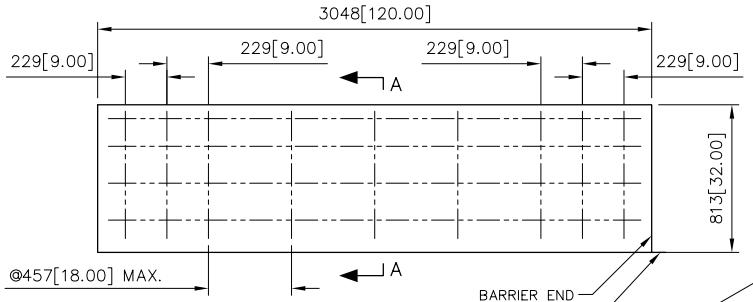

DETAIL A
TYPICAL REINFORCEMENT
(SEE NOTE 1)

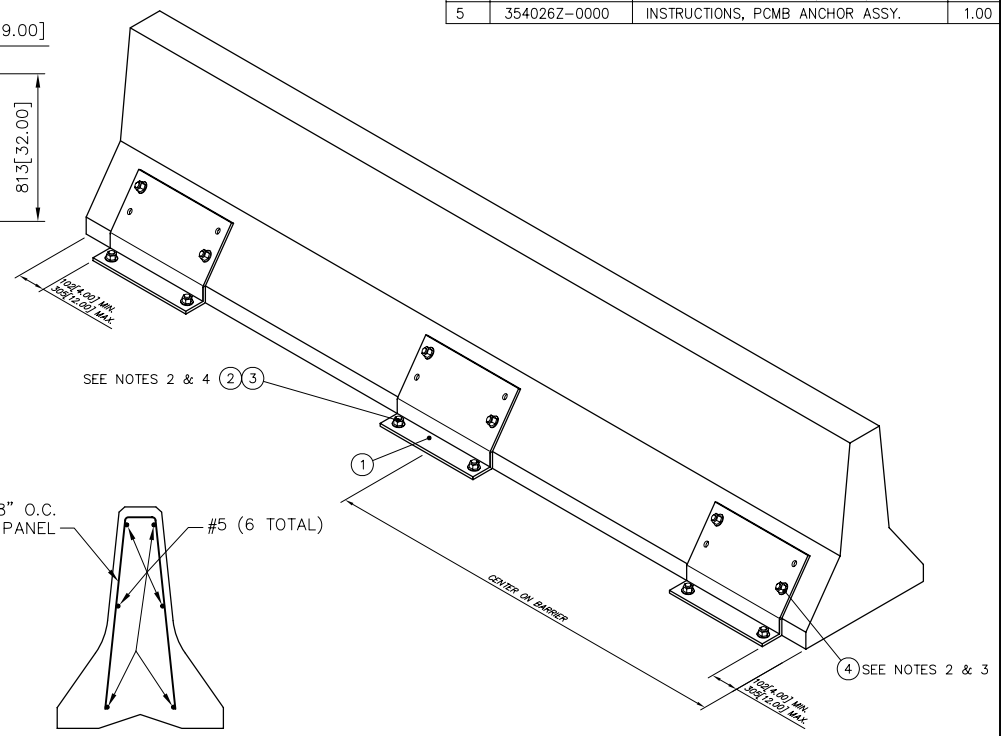

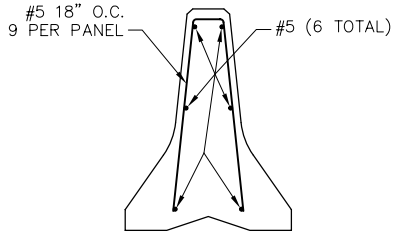

SECTION A–A

NOTE:

1. THE REINFORCEMENT SHOWN IN DETAIL "A" IS RECOMMENDED FOR PORTABLE CONCRETE BARRIER TO ENSURE ADEQUATE BARRIER INTEGRITY WHEN USED IN COMBINATION WITH THE QUADGUARD SYSTEM. THE DETAIL SHOWN IS BASED ON STATE OF CALIFORNIA STANDARD PLANS FOR TEMPORARY RAILING (TYPE K). VARIATIONS MAY BE REVIEWED AND DETERMINATIONS MADE AS TO REASONABLE EQUIVALENCE BY PROJECT ENGINEER.
2. USE ANCHOR PLATE AS TEMPLATE FOR DRILLING.
3. RECOMMENDED HOLE DEPTH INTO PCMB IS 127[5.00]. DRILL 4 HOLES IF NECESSARY TO INSTALL A MINIMUM OF 2 ANCHOR BOLTS PER BRACKET. FINAL TORQUE TO BE 163 kN[120 ft–lbs] (TYP).
4. IMPACT FORCES CAN BE TRANSFERRED INTO TERMINAL END OF THE BARRIER. ADEQUATE ANCHORAGE IS REQUIRED TO ENSURE PROPER IMPACT PERFORMANCE. PCMB MUST BE ANCHORED TO A RIGID SURFACE (NOT DIRT) WITH A MINIMUM OF 12 THREADED RODS (ITEM 3) AS SHOWN. ANCHOR BOTH SIDES OF BARRIER USING ITEM 1 (6 REQUIRED). ATTACH PCMB USING ONE OF THE FOLLOWING:
   6 1/2" STUDS MAY BE USED TO ANCHOR PCMB TO 28 MPa [4000 PSI] MIN. P.C. CONCRETE PER THE FOLLOWING MINIMUM CONCRETE DEPTHS:**
   a) 150 [6.00] NON–REINFORCED ROADWAY.
   b) 180 [7.00] DECK STRUCTURE.
   18" THREADED RODS MAY BE USED TO ANCHOR PCMB TO ASPHALT.(6" MIN. THICKNESS)**
5. MIN. 28 MPa [4,000 PSI] P.C. CONCRETE MEDIAN BARRIER.
6. DIMENSIONS ARE IN MILLIMETERS [INCHES] UNLESS OTHERWISE NOTED.

**REFER TO THE QUADGUARD CZ MP–3 ANCHORING SYSTEM INSTALLATION INSTRUCTIONS FOR SPECIFICATIONS.

ASSEMBLY NO. 3540261–0000
ASSEMBLY NO. 3540260–0000

Revisions	Date	Rev.	By	Ckd.	App.
ADDED TABLE & 3540261–0000	10/19/07	D	DPH	JME	JMT
ADDED & REVISED BRACKETS & NOTES	9/16/97	B	JE	KM	SPT
ADDED INSTRUCTION NUMBER	11/19/97	C	DM	KM	KM

REFERENCES

DRAWN: J. Espinoza	DATE: 7/31/97	
DESIGNED: S. Turner	DATE: 11/07/96	
CHECKED: KRM	DATE: 9/12/97	
APPROVED: SPT	DATE: 9/17/97	
CAD FILE: 3540260–0000.dwg		
NEXT ASSEMBLY:		

ENERGY ABSORPTION SYSTEMS, INC.
ENGINEERING AND RESEARCH DEPARTMENT

QUADGUARD™ SYSTEM
PCMB ANCHOR ASSEMBLY

INSTRUCTION NUMBER 354026Z–0000

SCALE	DWG.	SHEET	REV
N.T.S.	3540260–0000	1 of 1	D

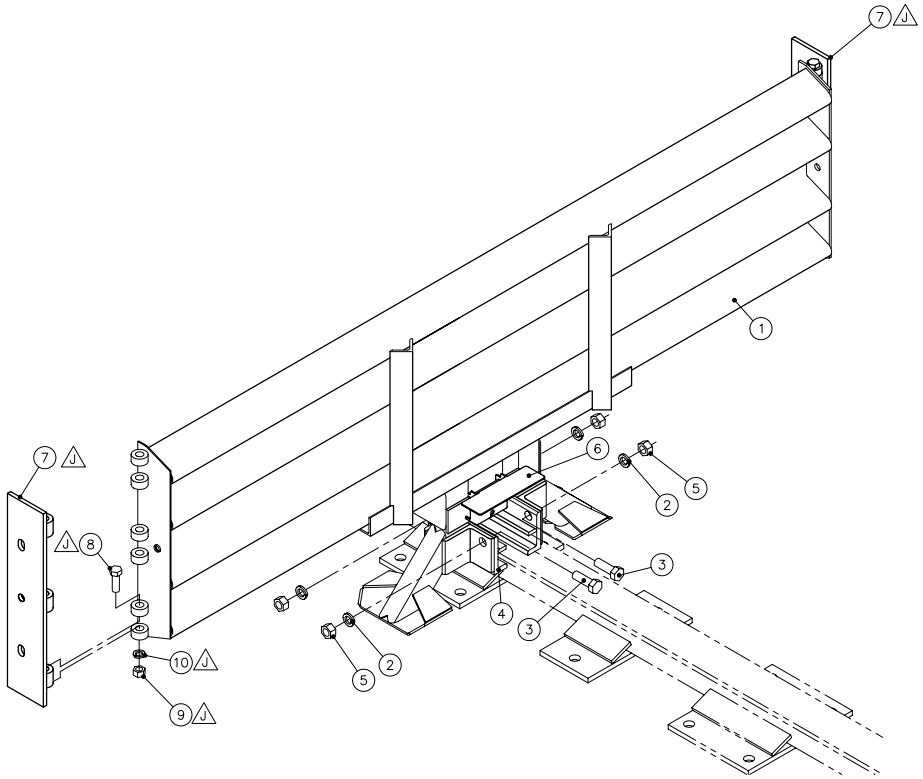

PARTS LIST

ITEM	STOCK NO.	DESCRIPTION	REQ'D
1	SEE TABLE A	DIAPHRAGM,QB,QG,G	1.00
2	2708201–0000	WASHER,LOCK,3/4,G	4.00
3	2699121–0000	BOLT,HX,3/4x2,G8,G	4.00
4	2760091–0000	MONORAIL GUIDE,QG,G	2.00
5	2704341–0000	NUT,HX,3/4,G,GR DH	4.00
6	2760292–0000	BRACKET,CARTRIDGE SUPPORT,DIAPHRAGM	2.00
J 7	2760435–0000	HINGE PLATE,FENDER PANEL,QG,G	2.00
J 8	2701991–0000	BOLT,HX,5/8X4,G5,G	6.00
J 9	2704141–0000	NUT,HX,5/8,G	6.00
J 10	2708231–0000	WASHER,LOCK,5/8,G	6.00

TABLE A

ASSEMBLY NO.	DESCRIPTION	ITEM 1 PART NO.
3540340–0673	DIAPHRAGM ASSY,QG,0673	2761041–0673
3540340–0753	DIAPHRAGM ASSY,QG,0753	2761041–0753
3540340–0833	DIAPHRAGM ASSY,QG,0833	2761041–0833
3540340–0913	DIAPHRAGM ASSY,QG,0913	2761041–0913
3540340–0993	DIAPHRAGM ASSY,QG,0993	2761041–0993
3540340–1073	DIAPHRAGM ASSY,QG,1073	2761041–1073
3540340–1153	DIAPHRAGM ASSY,QG,1153	2761041–1153
3540340–1233	DIAPHRAGM ASSY,QG,1233	2761041–1233
3540340–1273	DIAPHRAGM ASSY,QG,1273	2761041–1273
3540340–1313	DIAPHRAGM ASSY,QG,1313	2761041–1313
3540340–1393	DIAPHRAGM ASSY,QG,1393	2761041–1393
3540340–1473	DIAPHRAGM ASSY,QG,1473	2761041–1473
3540340–1513	DIAPHRAGM ASSY,QG,1513	2761041–1513
3540340–1553	DIAPHRAGM ASSY,QG,1553	2761041–1553
3540340–1633	DIAPHRAGM ASSY,QG,1633	2761041–1633
3540340–1729	DIAPHRAGM ASSY,QG,1729	2761041–1729
3540340–1793	DIAPHRAGM ASSY,QG,1793	2761041–1793
3540340–1873	DIAPHRAGM ASSY,QG,1873	2761041–1873
3540340–1953	DIAPHRAGM ASSY,QG,1953	2761041–1953
3540340–2033	DIAPHRAGM ASSY,QG,2033	2761041–2033

NOTE:
QUADGUARD II REQUIRES SHIM KIT,
SEE DRAWING 3540078–0000.

ASSEMBLY NO. 3540340–____ (SEE TABLE A)

Revisions	Date	Rev.	By	Ckd.	App.
ADDED ITEMS 7, 8, 9, & 10	08/03/01	J	LWC	BMK	DMO
UPDATED VIEW OF ITEM 6 (ECO 2495)	10/29/08	K	WWL	STT	PLK
ADDED NOTE & SEE SHEET 2 (ECO 2663)	5/27/09	L	WWL	STT	MJB

REFERENCES

DRAWN: D. Staus	DATE: 5/12/97		
DESIGNED: J. Machado	DATE: 5/13/97		
CHECKED: KRM	DATE: 7/2/97		
APPROVED: J. Machado	DATE: 7/7/97		
CAD FILE: 3540340–0000.dwg			
NEXT ASSEMBLY:			

ENERGY ABSORPTION SYSTEMS, INC.
ENGINEERING AND RESEARCH DEPARTMENT

QUADGUARD SYSTEM
DIAPHRAGM ASSY,QG,WIDE

SCALE	DWG.	SHEET	REV
1:12	3540340–0000	1 of 2	L

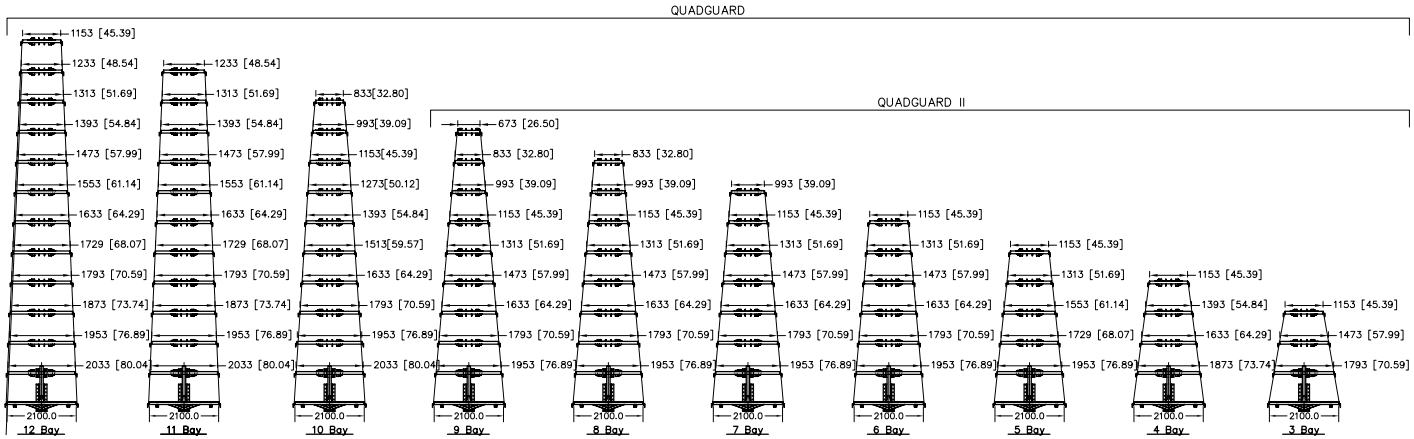

QuadGuard Systems – 2285 (90)

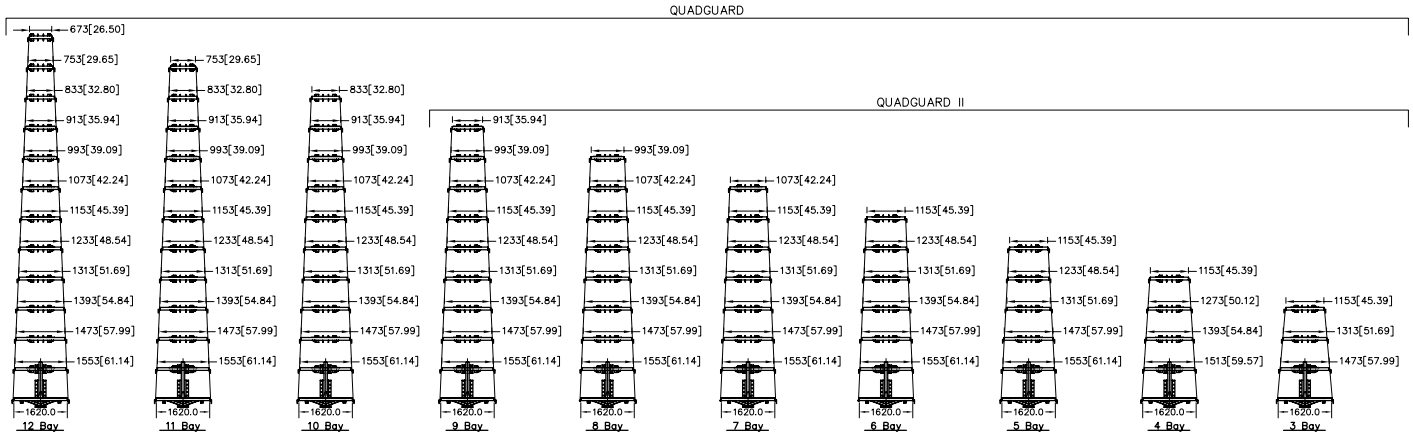

QuadGuard Systems – 1755 (69)

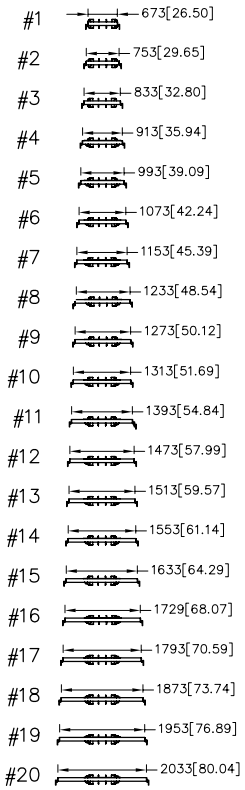

Diaphragms

SCALE: 1 = 100

(SEE TABLE A)

ASSEMBLY NO. 3540340-____

NOTE: 1. DIMENSIONS ARE IN mm [IN.] UNLESS OTHERWISE NOTED.

Revisions	Date	Rev.	By	Ckd.	App.
ADDED HINGE 2760435-0000	08/03/01	J	LWC	BMK	DMO
SEE SHEET 1 (ECO 2495)	10/29/08	K	WWL	/	/
ADDED QG & QG II BRACKETS (ECO 2663)	5/27/09	L	WWL	STT	MJB

REFERENCES

DRAWN:	J. Machado	DATE:	05/13/97
DESIGNED:	J. Machado	DATE:	05/13/97
CHECKED:	K. Mortensen	DATE:	07/02/97
APPROVED	J. Machado	DATE:	07/07/97
CAD FILE:	3540340-0000 Sh02.dwg		
NEXT ASSEMBLY:			

ENERGY ABSORPTION SYSTEMS, INC.
ENGINEERING AND RESEARCH DEPARTMENT

QUADGUARD SYSTEM
DIAPHRAGM ASSEMBLY,QG,WIDE

SCALE	DWG.	SHEET	REV
1=132	3540340-0000	2 of 2	L

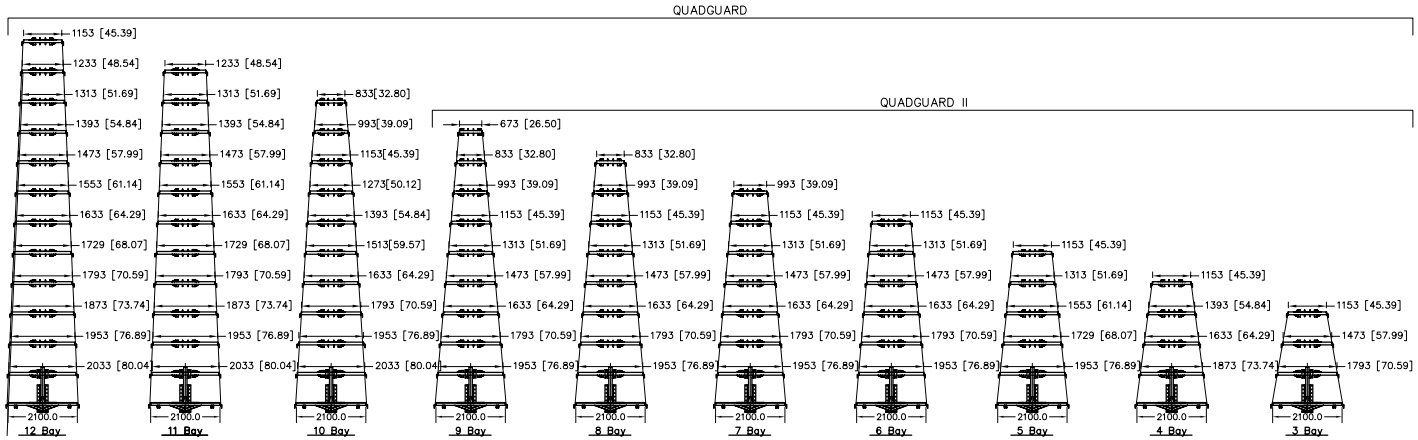

QuadGuard Systems – 2285 (90)

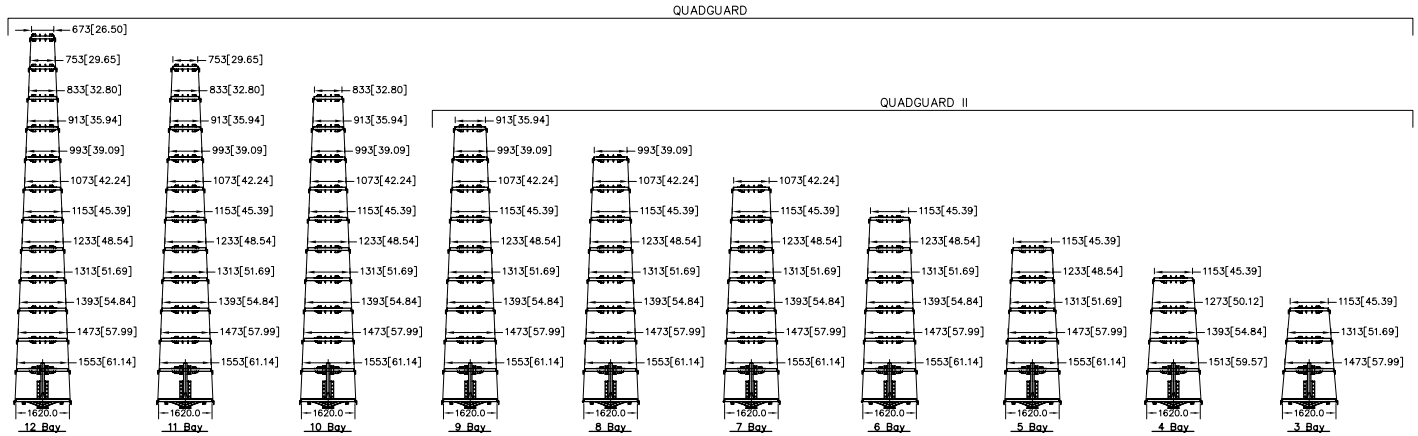

QuadGuard Systems – 1755 (69)

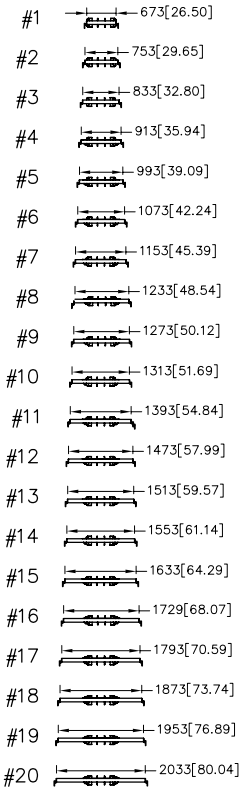

Diaphragms

SCALE: 1 = 100

(SEE TABLE A)

ASSEMBLY NO. 3540340-____

NOTE: 1. DIMENSIONS ARE IN mm [IN.] UNLESS OTHERWISE NOTED.

Revisions	Date	Rev.	By	Ckd.	App.
ADDED HINGE 2760435-0000	08/03/01	J	LWC	BMK	DMO
SEE SHEET 1 (ECO 2495)	10/29/08	K	WWL	/	/
ADDED QG & QG II BRACKETS (ECO 2663)	5/27/09	L	WWL	STT	MJB

REFERENCES

DRAWN: J. Machado	DATE: 05/13/97		
DESIGNED: J. Machado	DATE: 05/13/97		
CHECKED: K. Mortensen	DATE: 07/02/97		
APPROVED: J. Machado	DATE: 07/07/97		
CAD FILE: 3540340-0000 Sh02.dwg			
NEXT ASSEMBLY:			

ENERGY ABSORPTION SYSTEMS, INC.
ENGINEERING AND RESEARCH DEPARTMENT

QUADGUARD SYSTEM
DIAPHRAGM ASSEMBLY,QG,WIDE

SCALE	DWG.	SHEET	REV
1=132	3540340-0000	2 of 2	L

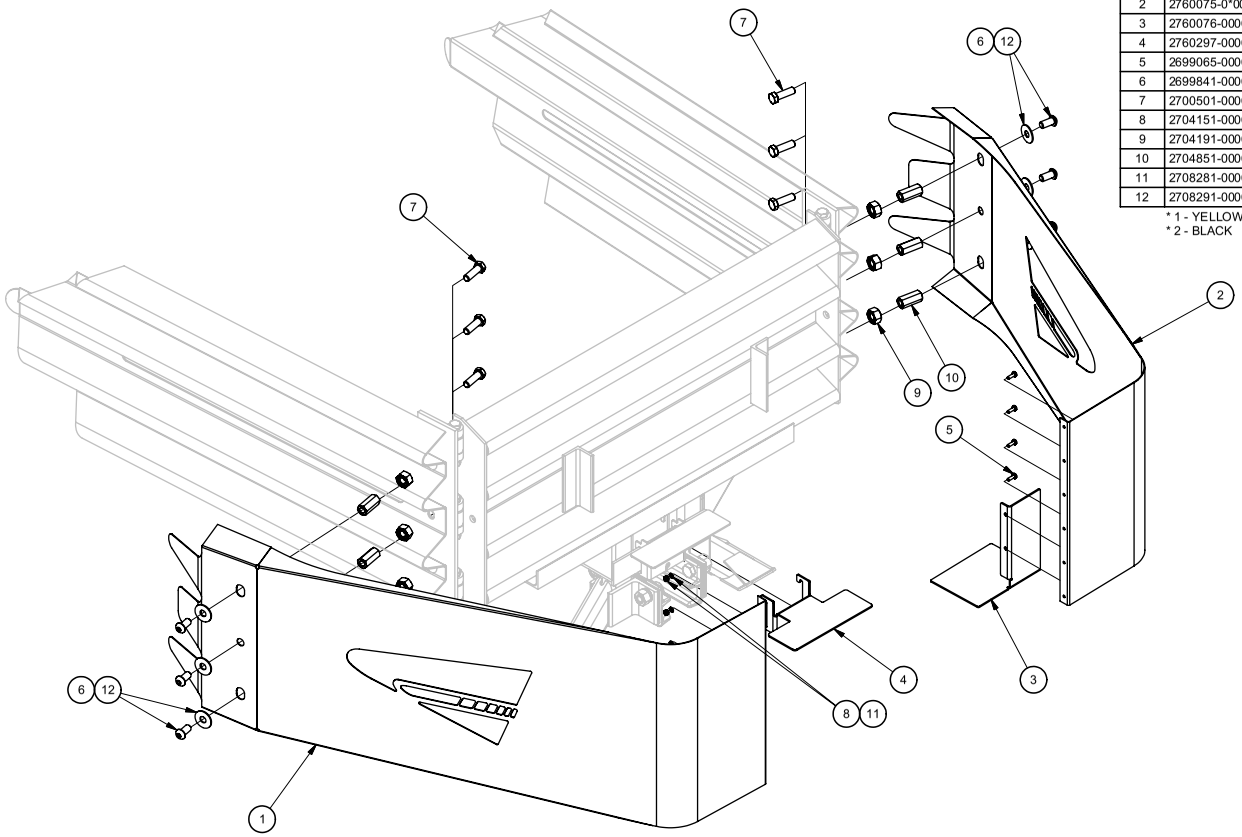

PARTS LIST			
ITEM	STOCK NO.	DESCRIPTION	QTY.
1	2760074-0*00	NOSE,L,WIDE,QGII,W/LOGO	1
2	2760075-0*00	NOSE,R,WIDE,QGII,W/LOGO	1
3	2760076-0000	BRACKET,CART SUPPORT,NOSE,QGII,B	1
4	2760297-0000	BRACKET,CART SUPPORT,NOSE BAY,QGII,G	1
5	2699065-0000	BOLT,HX,1/4X3/4,G	6
6	2699841-0000	BOLT,BT,5/8X1 1/4,HX SOC,M GALV	6
7	2700501-0000	BOLT,HX,5/8X2,G2,G	6
8	2704151-0000	NUT,HX,1/4,G	6
9	2704191-0000	NUT,HX,5/8,G,RAIL	6
10	2704851-0000	NUT,HEX,COUPLING,5/8-11X2 1/8,G	6
11	2708281-0000	WASHER,LOCK,1/4,G	6
12	2708291-0000	WASHER,FLAT,5/8 X 1 3/4, G	6

* 1 - YELLOW
* 2 - BLACK

ASSEMBLY NO. 3540043-0100 (YELLOW)
ASSEMBLY NO. 3540043-0200 (BLACK)

DRAWN: D. Kohfeld	DATE: 4/3/2009	
DESIGNED: M. Buehler	DATE: 12/30/2008	
CHECKED: JME	DATE: 4/6/2009	
APPROVED: R. Brougher	DATE: 4/6/2009	
FILE: 3540043-0000.idw		
NEXT ASSEMBLY:		

ENERGY ABSORPTION SYSTEMS, INC.
ENGINEERING AND RESEARCH DEPARTMENT

NOSE ASSY,QGII,WIDE

SCALE:	DRAWING:	SHEET:	REV
	3540043-0000	1 of 1	

PARTS LIST			
ITEM	STOCK NO.	DESCRIPTION	REQ'D
1	2760081–0000	PANEL,FENDER,QG,G	1.00
2	2708841–0000	WASHER,MUSHROOM,QG,G	1.00
3	2706605–0000	SCREW,FL,5/8X8 1/2,G8,G,SOCKET	1.00
4	2715044–0000	SPRING,DIE,1 1/2 ODX3/4X6	1.00
6	2704191–0000	NUT,HX,5/8,G,RAIL	3.00
9	2699341–0000	BOLT,RAIL,5/8X2,G	2.00

TWO FENDER PANEL ASSEMBLIES REQUIRED PER BAY.

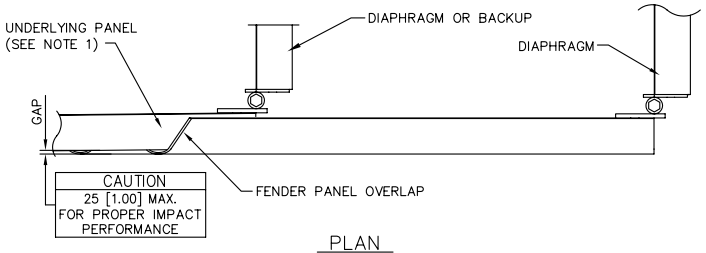

PLAN
SCALE = 1:10

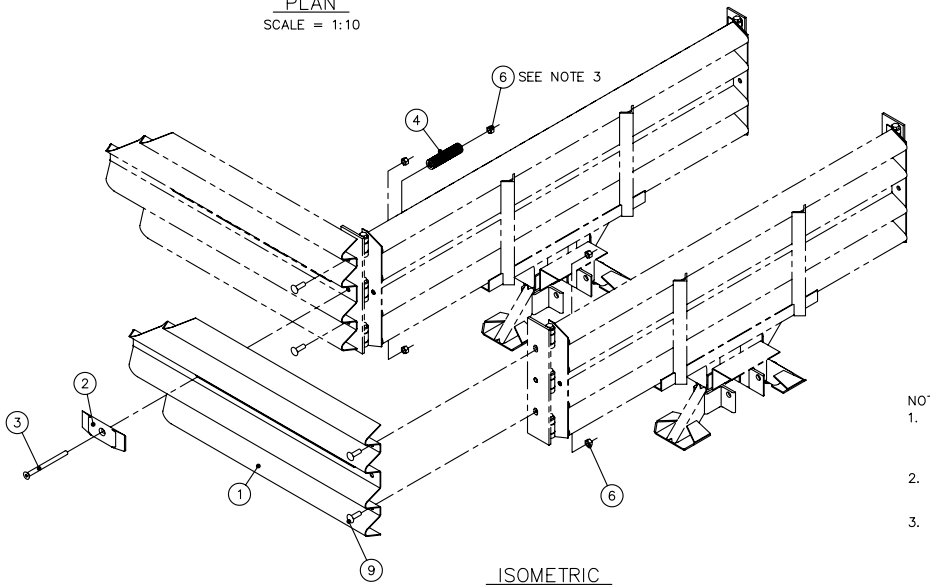

ISOMETRIC
SCALE = 1:20

NOTES:
1. UNDERLYING PANEL IS A FENDER PANEL IF ATTACHED TO A DIAPHRAGM. UNDERLYING PANEL IS A BACKUP SIDE PANEL, EXTENSION PANEL OR TRANSITION PANEL IF ATTACHED TO THE BACKUP.
2. UNITS OF MEASUREMENT ARE MILLIMETERS [INCHES] UNLESS OTHERWISE NOTED.
3. TIGHTEN NUT UNTIL IT REACHES END OF THREADS.

ASSY NO. 3540370–0000

Revisions	Date	Rev.	By	Ckd.	App.
REMOVED ITEMS 7, 8, 10, & 11	07/11/01	G	LWC	BMK	DMO
REVISED PLAN VIEW	10/04/01	H	RSG	DMO	FP
ADDED NOTE 3	3/26/02	I	DDW	DMO	SPT

REFERENCES

DRAWN: D. Staus	DATE: 6/12/97	
DESIGNED: J. Machado	DATE: 4/10/97	
CHECKED: KRM	DATE: 7/7/97	
APPROVED: J. Machado	DATE: 7/7/97	
CAD FILE: 3540370–0000.dwg		
NEXT ASSEMBLY:		

ENERGY ABSORPTION SYSTEMS, INC.
ENGINEERING AND RESEARCH DEPARTMENT

QuadGuard – Wide System
FENDER PANEL ASSY

SCALE	DWG.	SHEET	REV
AS NOTED	3540370–0000	1 of 1	I

TABLE

ASSY. NO.	ITEM 1	DESCRIPTION	WIDTH
3540401–0000	2760491–0000	BACKUP FACE,CONC,64,QG WIDE,G	1620 [64"]
3540402–0000	2760481–0000	BACKUP FACE,CONC,83,QG WIDE,G	2100 [83"]
3540403–0000	2760402–0000	BACKUP FACE,CONC,120,QG WIDE,G	3048 [120"]

PARTS LIST

ITEM	STOCK NO.	DESCRIPTION	REQ'D
* 1	SEE TABLE	BACKUP FACE,CONC,__,QG WIDE,G	1.00
2	3525130–0000	ANCHOR,MP–3,PT KIT,3/4X6 1/2 HOR	1.00
3	2760435–0000	HINGE PLATE,FENDER PANEL,QG,G	2.00
5	2760471–0000	PANEL,SIDE,QG WIDE,G	2.00
6	2704031–0000	NUT,HX,3/8,G	16.0
10	2701991–0000	BOLT,HX,5/8X4,G5,G	6.00
11	2708231–0000	WASHER,LOCK,5/8,G	6.00
12	3525300–0000	ANCHOR,MP–3,PT KIT,3/4X7 VT	2.00
13	2760051–0000	MONORAIL,ONE BAY,QG,G	1.00
14	2704141–0000	NUT,HX,5/8,G	6.00
15	2701811–0000	BOLT,RAIL,5/8X1 1/4,G	4.00
16	2704191–0000	NUT,HX,5/8,G,RAIL	4.00
17	2760501–0000	TEL ST 1 3/4X1 3/4X12GA,H4S,G,10" LG	4.00
18	2760502–0000	TEL ST 2X2X12GA,H2S,G,10" LONG	4.00
19	2699601–0000	BOLT,HX,3/8X3 1/2,G2,G,ALL THREAD	16.0

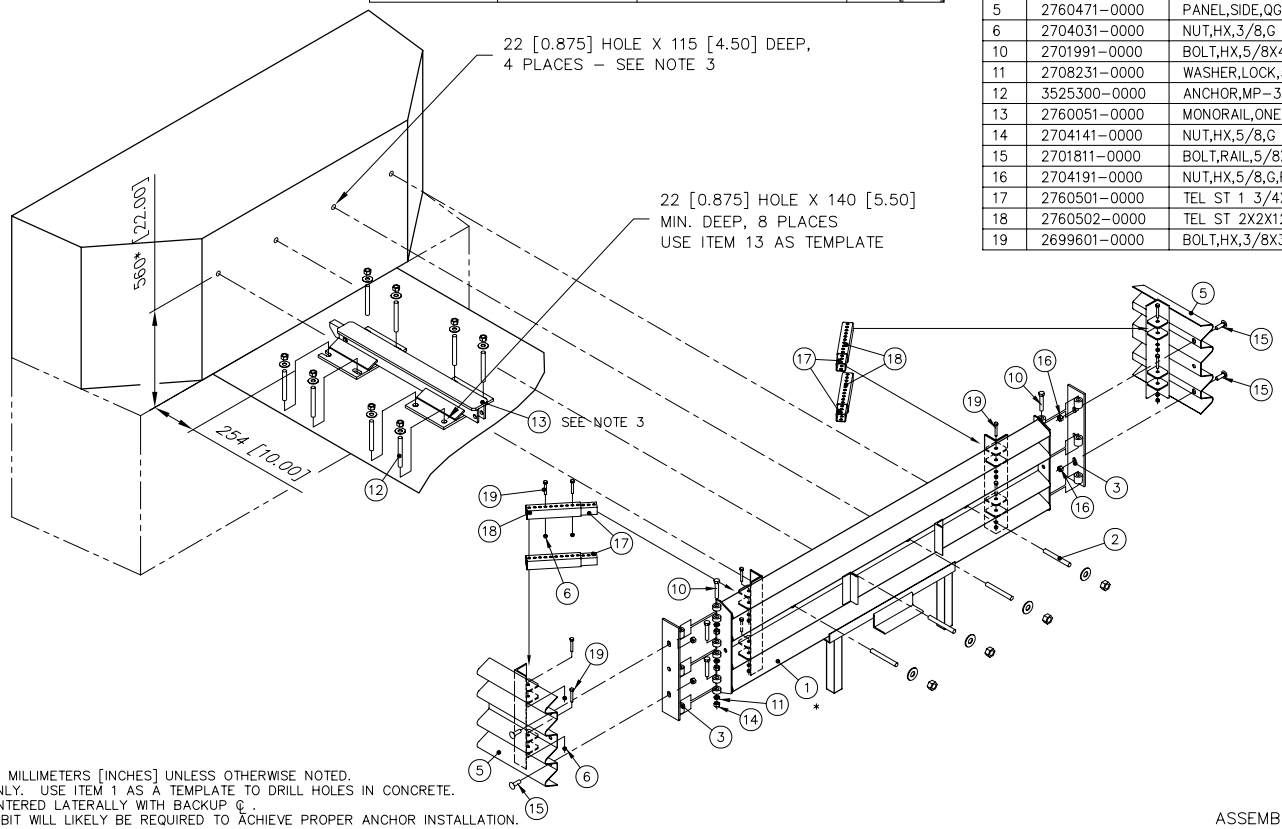

NOTES:
1. DIMENSIONS ARE IN MILLIMETERS [INCHES] UNLESS OTHERWISE NOTED.
* 2. FOR REFERENCE ONLY. USE ITEM 1 AS A TEMPLATE TO DRILL HOLES IN CONCRETE.
3. ITEM 13 TO BE CENTERED LATERALLY WITH BACKUP ℄ .
4. A REBAR CUTTING BIT WILL LIKELY BE REQUIRED TO ACHIEVE PROPER ANCHOR INSTALLATION.

ASSEMBLY NO. (SEE TABLE)

REFERENCES

CONCRETE BACKUP,QG WIDE 35–40–41

Revisions	Date	Rev.	By	Ckd.	App.
CHG'D ITEM 3, WAS 2760433–0000	12/8/99	C	DK	KM	BB
ITEM 10 WAS 2699571–0000	12/20/99	D	LWC	BMK	SPT
ADDED 120" BACKUP TO TABLE	05/19/08	E	RGC	STT	AVB

DRAWN: D. Staus	DATE: 7/8/97		
DESIGNED: J. Machado	DATE: 5/27/97		
CHECKED: B. Kornow	DATE: 7/17/97		
APPROVED: S. Trageser	DATE: 7/17/97		
CAD FILE: 3540400–0000.dwg			
NEXT ASSEMBLY:			

ENERGY ABSORPTION SYSTEMS, INC.
ENGINEERING AND RESEARCH DEPARTMENT

BACKUP ASSY,CONCRETE,__,QG WIDE

SCALE	DWG.	SHEET	REV
1:25	3540400–0000	1 of 1	E

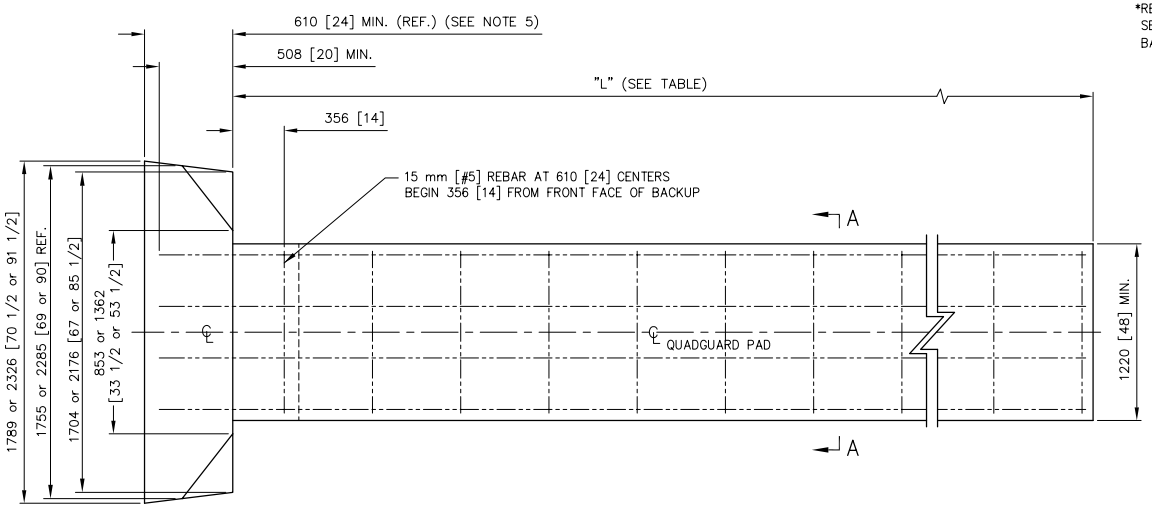

PLAN VIEW

SEE SHEETS 2 OR 3 FOR BACKUP

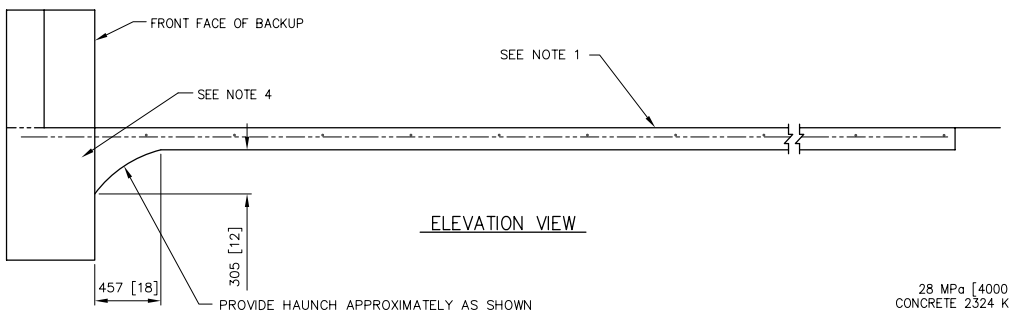

ELEVATION VIEW

*REQUIRED FOR PAD ONLY
SEE SHEET 2 OR 3 FOR
BACKUP DETAILS

TABLE "L" (SEE NOTE 2)

NO. OF BAYS	"L" (PAD LENGTH) m	[ft]	15 mm [#5] REBAR REQUIRED* m	[ft]	CONCRETE REQUIRED* m^3	[Yd^3]
3	3.5	11.5	23	74	0.8	1.0
4	4.4	14.5	29	94	1.0	1.3
5	5.3	17.5	34	109	1.1	1.5
6	6.3	20.5	40	129	1.3	1.7
7	7.2	23.5	44	144	1.5	1.9
8	8.1	26.5	50	164	1.7	2.2
9	9.0	29.5	55	179	1.8	2.4
10	9.9	32.5	61	199	2.0	2.6
11	10.8	35.5	66	214	2.2	2.8
12	11.7	38.5	72	234	2.3	3.0

QUADGUARD II

NOTES:
1. CROSS SLOPE OF PAD SHALL NOT EXCEED 8%, AND NOT VARY MORE THAN 2% FROM FRONT TO BACK.
2. ALL CONCRETE TO BE 28MPa [4000 PSI] P.C. CONCRETE.
3. FOR EXISTING APPROVED CONCRETE SURFACES:
   A) MIN 180 [7] DECK STRUCTURE,
   B) MIN 200 [8] NON-REINFORCED ROADWAY MEASURING AT LEAST 3.6 m [12'-0"] WIDE BY 15.24 m [50'-0"] LONG, OR
   C) MIN 150 [6] REINFORCED PAD.
   VERTICAL STEEL SHALL BE DOWELLED 140 [5.5] MIN. USING MP-3® ANCHORING SYSTEM GROUT OR EQUAL. ADJUST REBAR AND CONCRETE QUANTITIES AS NEEDED.
4. PAD AND BELOW GRADE ANCHOR BLOCK TO BE POURED MONOLITHICALLY.
5. A WIDTH OF 762 [30] IS REQUIRED IF AN END SHOE IS TO BE USED. OBTAIN DRAWING 3540441-0000 IF END SHOE IS REQUIRED.
6. DIMENSIONS ARE IN mm [IN] UNLESS OTHERWISE NOTED.

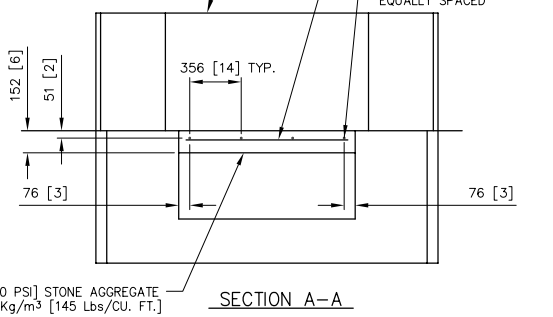

SECTION A-A

Revisions	Date	Rev.	By	Ckd.	App.
CHG'D REV TO MATCH SHEETS 2 & 3	3/28/00	F	DK	BB	SPT
ADDED TO NOTES 3 & 5, REMOVED JOINT NOTE, MOVED NOTES IN SECTION A-A	12/18/01	G	DDW	STT	DMO
ECO 2681; ADDED QG II TO TABLE L	6/22/09	H	DDS	STT	RCB

REFERENCES

DRAWN: D. Staus	DATE: 7/25/97	
DESIGNED: BB	DATE: 7/24/97	
CHECKED: BB	DATE: 8/18/97	
APPROVED: J. Machado	DATE: 8/19/97	
CAD FILE: 3540411-0000.dwg		
NEXT ASSEMBLY:		

ENERGY ABSORPTION SYSTEMS, INC.
ENGINEERING AND RESEARCH DEPARTMENT

QUADGUARD® SYSTEM
CONCRETE PAD & BACKUP, QG WIDE

SCALE	DWG.	SHEET	REV
1:30	3540411-0000	1 of 3	H

TABLE "R" (1)					
15 mm [#5] REBAR REQUIRED*		20 mm [#6] REBAR REQUIRED*		CONCRETE REQUIRED*	
METERS	FT	METERS	FT	m^3	Yd^3
41	132	17	53	1. 7	2. 3

*REQUIRED FOR BACKUP ONLY. SEE SHEET 1 FOR PAD DETAILS

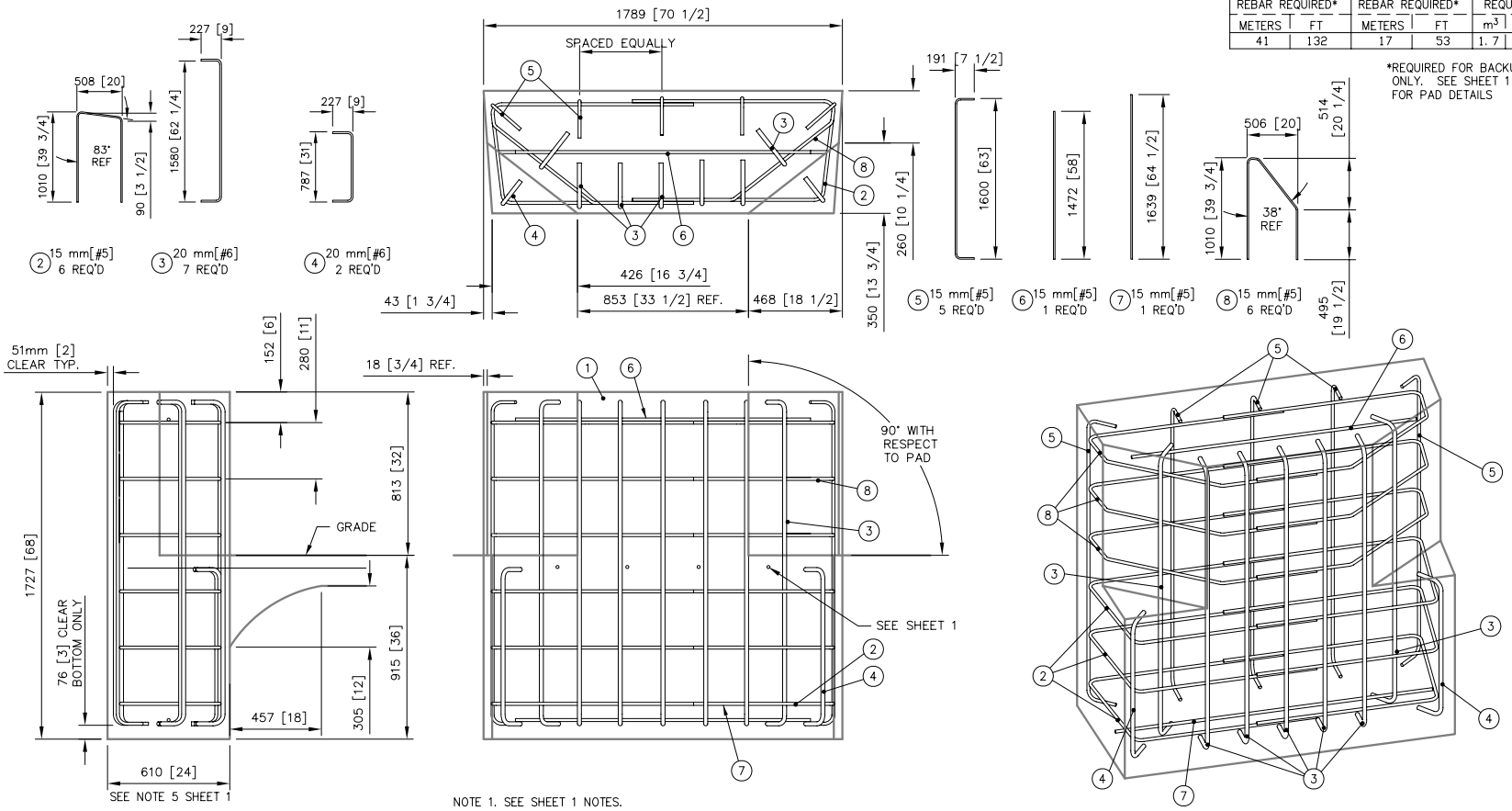

NOTE 1. SEE SHEET 1 NOTES.

Revisions	Date	Rev.	By	Ckd.	App.
CHG'D LENGTHS OF ITEMS 3, 4, & 5	3/28/00	F	DK	BB	SPT
CHANGED TO MATCH SHEET 1.	12/18/01	G	DDW	STT	DMO
ECO 2681; SEE SHEET 1 FOR CHANGES	6/22/09	H	DDS	STT	RCB

REFERENCES

DRAWN: D. Staus	DATE: 7/25/97		
DESIGNED: BB	DATE: 7/24/97		
CHECKED: BB	DATE: 8/18/97		
APPROVED: J. Machado	DATE: 8/19/97		
CAD FILE: 3540411-0000 Sh02.dwg			
NEXT ASSEMBLY:			

ENERGY ABSORPTION SYSTEMS, INC.
ENGINEERING AND RESEARCH DEPARTMENT

QUADGUARD® SYSTEM (69")
CONCRETE PAD & BACKUP, QG WIDE
ON GRADE

SCALE	DWG.	SHEET	REV
1:20	3540411-0000	2 of 3	H

TABLE "R" (1)				
15 mm [#5] REBAR REQUIRED*		20 mm [#6] REBAR REQUIRED*		CONCRETE REQUIRED*
METERS	FT	METERS	FT	M^3 / Yd^3
48	157	17	53	2.3 / 3.0

*REQUIRED FOR BACKUP ONLY. SEE SHEET 1 FOR PAD DETAILS

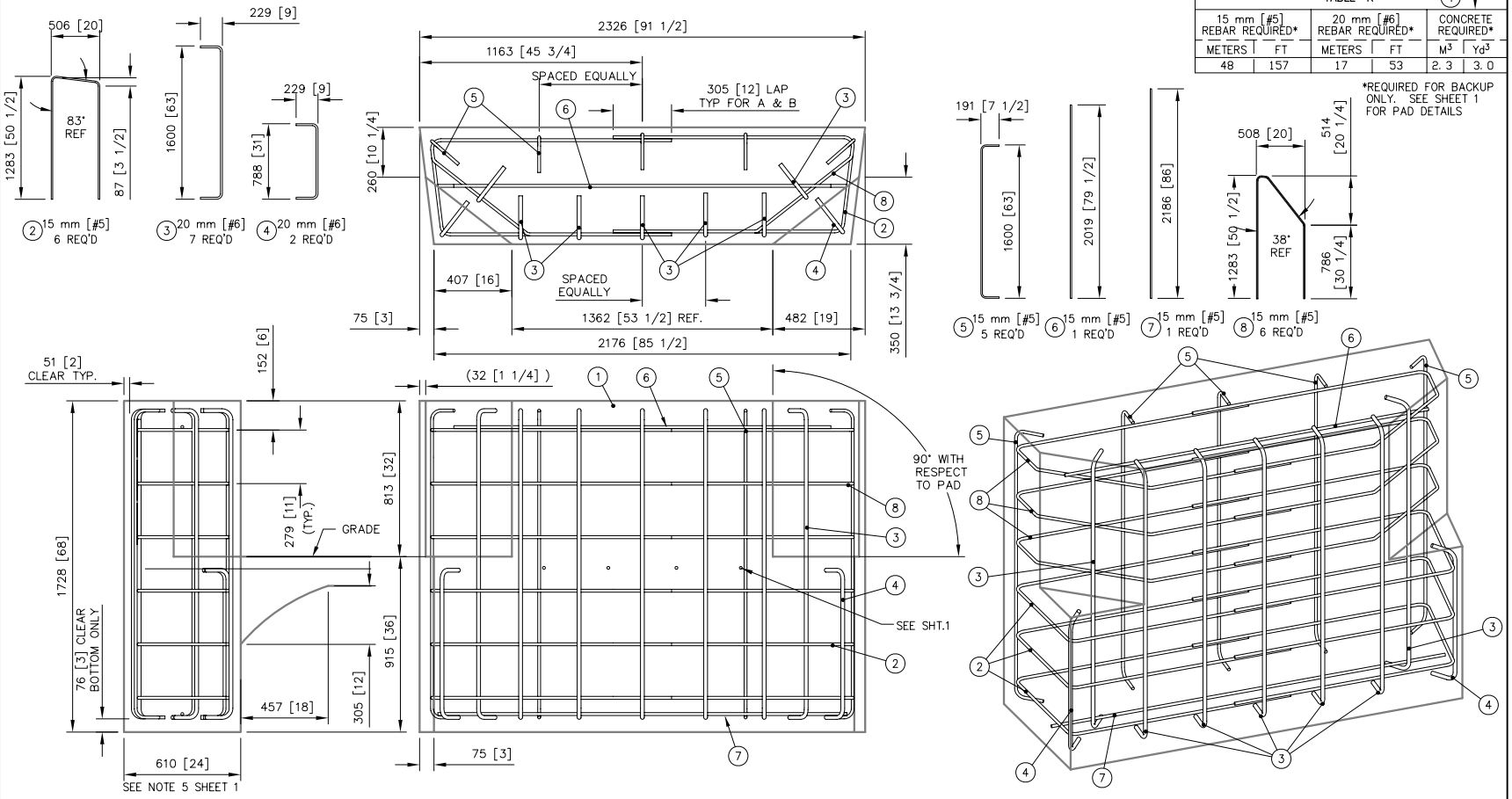

Revisions	Date	Rev.	By	Ckd.	App.
CHG'D LENGTHS OF ITEMS 3, 4, & 5	3/28/00	F	DK	BB	SPT
CHANGED TO MATCH SHEET 1.	12/18/01	G	DDW	STT	DMO
ECO 2681; SEE SHEET 1 FOR CHANGES	6/22/09	H	DDS	STT	RCB

REFERENCES

DRAWN: D. Staus	DATE: 7/25/97		
DESIGNED: BB	DATE: 7/24/97		
CHECKED: BB	DATE: 8/18/97		
APPROVED: J. Machado	DATE: 8/19/97		
CAD FILE: 3540411-0000 Sh03.dwg			
NEXT ASSEMBLY:			

ENERGY ABSORPTION SYSTEMS, INC.
ENGINEERING AND RESEARCH DEPARTMENT

QUADGUARD® SYSTEM (90")
CONCRETE PAD & BACKUP, QG WIDE
ON GRADE

SCALE	DWG.	SHEET	REV
1:20	3540411-0000	3 of 3	H

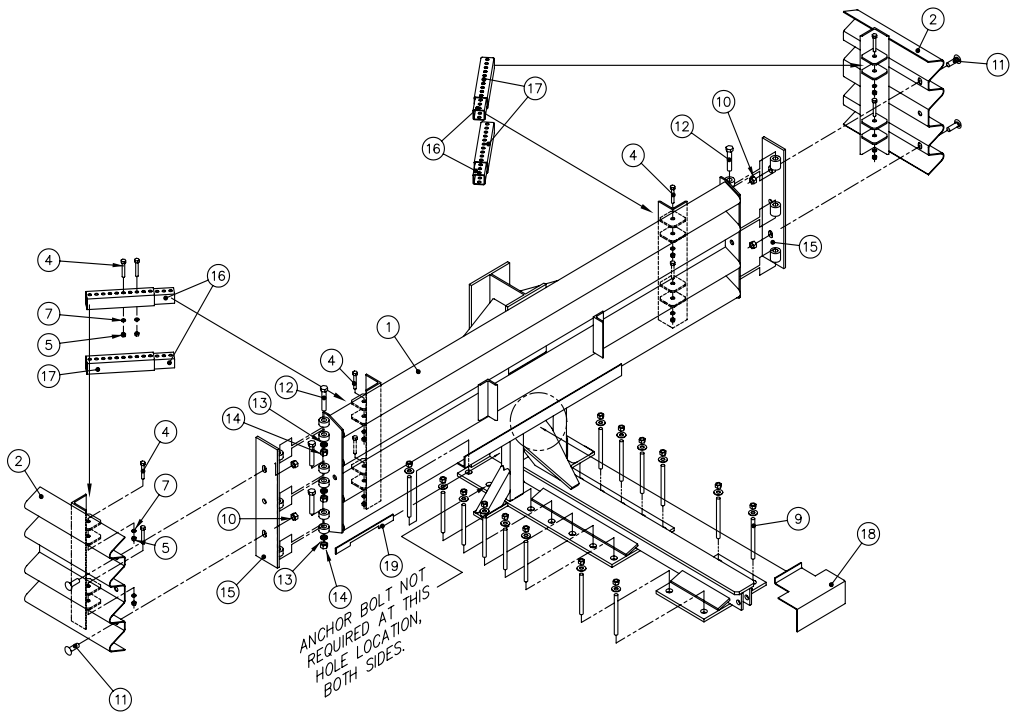

PARTS LIST

ITEM	STOCK NO.	DESCRIPTION	REQ'D
1	SEE TABLE A	BACKUP,TS,___,QG WIDE,G	1.00
2	2760471–0000	PANEL,SIDE,QG WIDE,G	2.00
4	2699601–0000	BOLT,HX,3/8X3 1/2,G2,G,ALL THREAD	16.0
5	2704031–0000	NUT,HX,3/8,G	16.0
7	2708041–0000	WASHER,LOCK,3/8,G	16.0
9	3525300–0000	ANCHOR,MP–3,PT–KIT,3/4X7,VT	3.00
10	2704191–0000	NUT,HX,5/8,G,RAIL	4.00
11	2699341–0000	BOLT,RAIL,5/8X2,G	4.00
12	2701991–0000	BOLT,HX,5/8X4,G5,G	6.00
13	2708231–0000	WASHER,LOCK,5/8,G	6.00
14	2704141–0000	NUT,HX,5/8,G	6.00
15	2760435–0000	HINGE PLATE,FENDER PANEL,QG,G	2.00
16	2760501–0000	TEL ST 1 3/4X1 3/4X12GA,H4S,G,10" LG	4.00
17	2760502–0000	TEL ST 2X2X12GA,H2S,G,10" LONG	4.00
18	2760293–0000	BRACKET,CARTRIDGE SUPPORT,TS B/U	1.00
19	2760294–0000	LOCKING BAR,CART SUPPORT,QG	1.00

TABLE A

ASSY. NO.	STOCK NO.	DESCRIPTION	WIDTH
3540391–0000	2760451–0000	BACKUP,TS,64,QG WIDE,G	1620 [64"]
3540392–0000	2760452–0000	BACKUP,TS,83,QG WIDE,G	2100 [83"]

NOTES:
1. WHEN TRANSITIONING QUADGUARD SYSTEM TO EXISTING BARRIER REFER TO THE TRANSITION ASSEMBLY DRAWINGS FOR PROPER USE OF SIDE PANEL PART NO. 2760141–0000.

ASSEMBLY NO. SEE TABLE A

Revisions	Date	Rev.	By	Ckd.	App.
ITEM 12 WAS 2699571–0000	12/20/99	E	LWC	BMK	SPT
REMOVED 1 ANCHOR BOLT & ADDED NOTE	03/19/99	C	LWC	KM	SPT
UPDATED HINGES, ITEM 15 WAS 2760433–0000	12/10/99	D	DK	BB	SPT

REFERENCES

DRAWN:	D. Staus	DATE:	7/1/97
DESIGNED:	J. Machado	DATE:	6/2/97
CHECKED:	B. Krage	DATE:	7/17/97
APPROVED	J. Machado	DATE:	7/17/97
CAD FILE:	3540390–0000.dwg		
NEXT ASSEMBLY:			

ENERGY ABSORPTION SYSTEMS, INC.
ENGINEERING AND RESEARCH DEPARTMENT

QUADGAURD® SYSTEM

BACKUP ASSY,TS,QG WIDE

SCALE	DWG.	SHEET	REV
1:20	3540390–0000	1 of 1	E

TABLE					YARDS OF CONCRETE IN PAD	
NO. OF BAYS	"L" (PAD LENGTH)		REBAR REQUIRED			
	[m]	[ft-in]	[m]	[ft-in]	m^3	[YARDS^3]
1	2.74	[9'-0"]	14.83	[48'-8"]	1.59	[2.1]
2	2.74	[9'-0"]	14.83	[48'-8"]	1.59	[2.1]
3	3.66	[12'-0"]	20.73	[68'-0"]	1.82	[2.4]
4	4.57	[15'-0"]	25.50	[83'-8"]	1.97	[2.6]
5	5.49	[18'-0"]	31.39	[103'-0"]	2.12	[2.8]
6	6.40	[21'-0"]	36.17	[118'-8"]	2.35	[3.1]
7	7.32	[24'-0"]	42.06	[138'-0"]	2.51	[3.3]
8	8.23	[27'-0"]	46.84	[153'-8"]	2.66	[3.5]
9	9.14	[30'-0"]	52.73	[173'-0"]	2.81	[3.7]

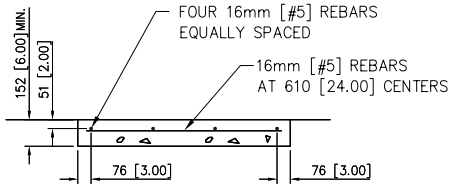

SECTION A–A

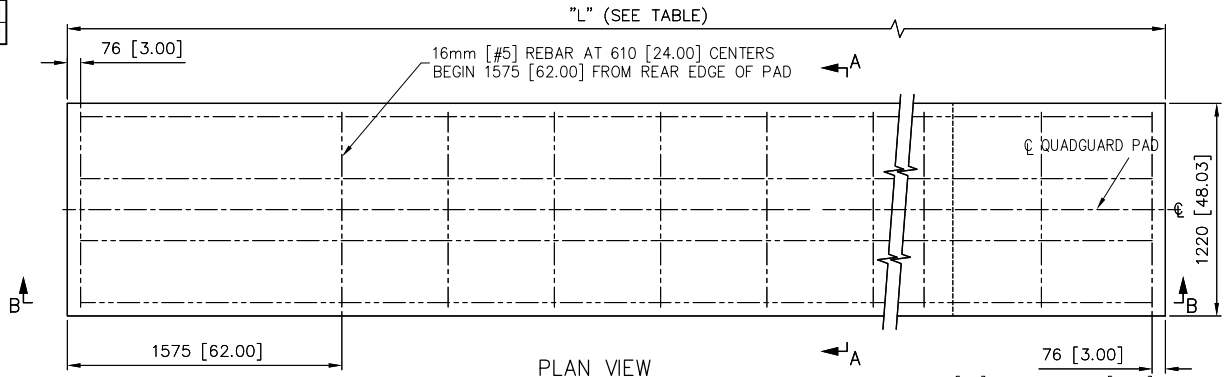

PLAN VIEW

PLACE 16mm [#5] REBAR AT 76 [3.00] FROM EDGE FOR ALL PAD LENGTHS.

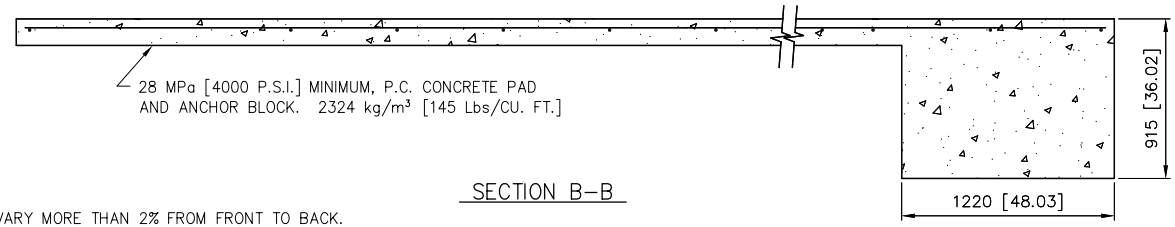

SECTION B–B

NOTES:

1. CROSS SLOPE OF PAD SHALL NOT EXCEED 8%, AND NOT VARY MORE THAN 2% FROM FRONT TO BACK.
2. UNITS OF MEASUREMENT ARE MILLIMETERS [INCHES] UNLESS OTHERWISE NOTED.

Revisions	Date	Rev.	By	Ckd.	App.

REFERENCES

DRAWN: W. Leddington	DATE: 5/27/09		
DESIGNED: ---	DATE: ---		
CHECKED: S. Trageser	DATE: 5/28/09		
APPROVED: M.J. Buehler	DATE: 5/28/09		
CAD FILE: 354076.DWG			
NEXT ASSEMBLY:			

ENERGY ABSORPTION SYSTEMS, INC.
ENGINEERING AND RESEARCH DEPARTMENT

QUADGUARD ® II SYSTEM
CONCRETE PAD FOR
TENSION STRUT BACKUP

SCALE	DWG.	SHEET	REV
NTS	35–40–76	1 of 2	

TABLE					YARDS OF CONCRETE IN PAD	
NO. OF BAYS	"L" (PAD LENGTH)		REBAR REQUIRED			
	[m]	[ft-in]	[m]	[ft-in]	m^3	[$YARDS^3$]
1	2.74	[9'-0"]	14.83	[48'-8"]	0.7	[0.9]
2	2.74	[9'-0"]	14.83	[48'-8"]	0.7	[0.9]
3	3.66	[12'-0"]	20.73	[68'-0"]	0.9	[1.2]
4	4.57	[15'-0"]	25.50	[83'-8"]	1.2	[1.5]
5	5.49	[18'-0"]	31.39	[103'-0"]	1.4	[1.8]
6	6.40	[21'-0"]	36.17	[118'-8"]	1.6	[2.1]
7	7.32	[24'-0"]	42.06	[138'-0"]	1.8	[2.4]
8	8.23	[27'-0"]	46.84	[153'-8"]	2.1	[2.7]
9	9.14	[30'-0"]	52.73	[173'-0"]	2.3	[3.0]

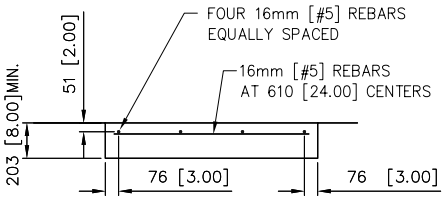

SECTION C–C

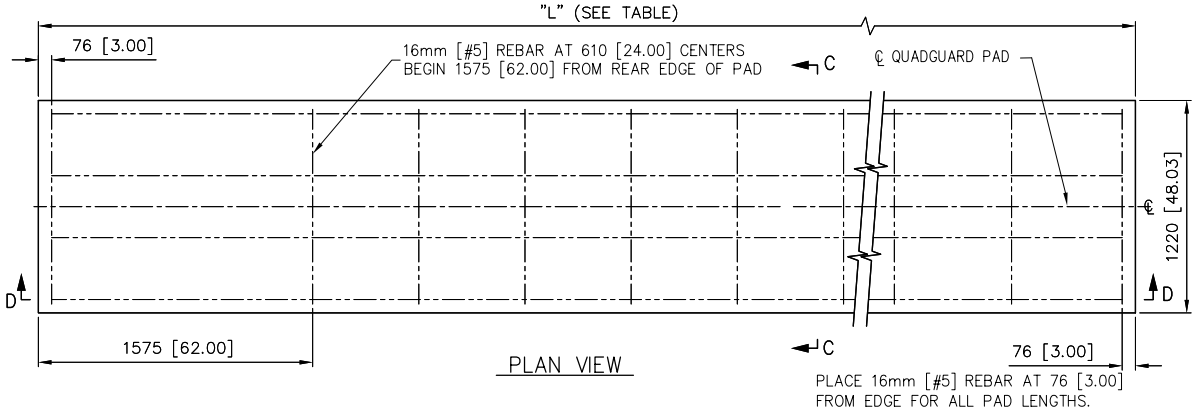

PLAN VIEW

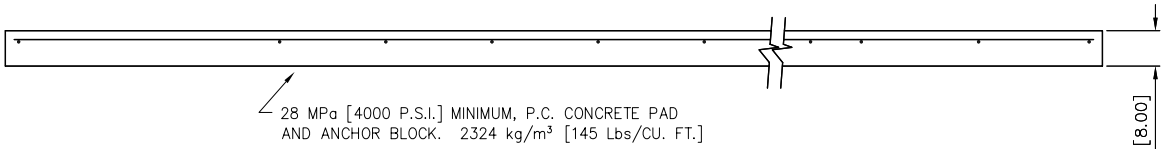

SECTION D–D

NOTES:

1. CROSS SLOPE OF PAD SHALL NOT EXCEED 8%, AND NOT VARY MORE THAN 2% FROM FRONT TO BACK.
2. TO PREVENT SLIDING DURING AN IMPACT, PAD MUST BE INSTALLED AGAINST OR TIED TO AN EXISTING STRUCTURE. OTHERWISE ADDITIONAL BELOW GRADE SUPPORTS MUST BE ADDED AS DETERMINED NECESSARY BY THE PROJECT ENGINEER.
3. UNITS OF MEASUREMENT ARE MILLIMETERS [INCHES] UNLESS OTHERWISE NOTED.

Revisions	Date	Rev.	By	Ckd.	App.

REFERENCES

DRAWN: W. Leddington	DATE: 5/27/09		
DESIGNED: ---	DATE: ---		
CHECKED: S. Trageser	DATE: 5/28/09		
APPROVED: M.J. Buehler	DATE: 5/28/09		
CAD FILE: 354076.dwg			
NEXT ASSEMBLY:			

ENERGY ABSORPTION SYSTEMS, INC.
ENGINEERING AND RESEARCH DEPARTMENT

QUADGUARD ® II SYSTEM
OPTIONAL 8" CONCRETE PAD
FOR TENSION STRUT BACKUP

SCALE	DWG.	SHEET	REV
NTS	35-40-76	2 of 2	

Customer Service Department

USA
Phone 1-888-323-6374 **Fax 1-312-467-1356**

Asia Pacific
Phone +65 6276 3398 **Fax +65 6276 6218**

Europe
Phone +44-1473-221-105 **Fax +44-1473-221-106**

35 East Wacker Dr., 11th Floor
Chicago, IL 60601-2076
Engineering and Manufacturing Facilities:
Rocklin, California and Pell City, Alabama

ENERGY ABSORPTION
SYSTEMS, INC.

A Quixote Company
Saving Lives By Design
http://www.energyabsorption.com/

Rev. C 4/27/09

Part No. 2750877-0100
©2008 Energy Absorption Systems, Inc.

CRASH CUSHION SYSTEM
(TYPE SCI-100GM)

Parts List:
01 – Transition 24" Concrete Block Right & Left #9433

Only need one transition for reverse direction traffic protection.

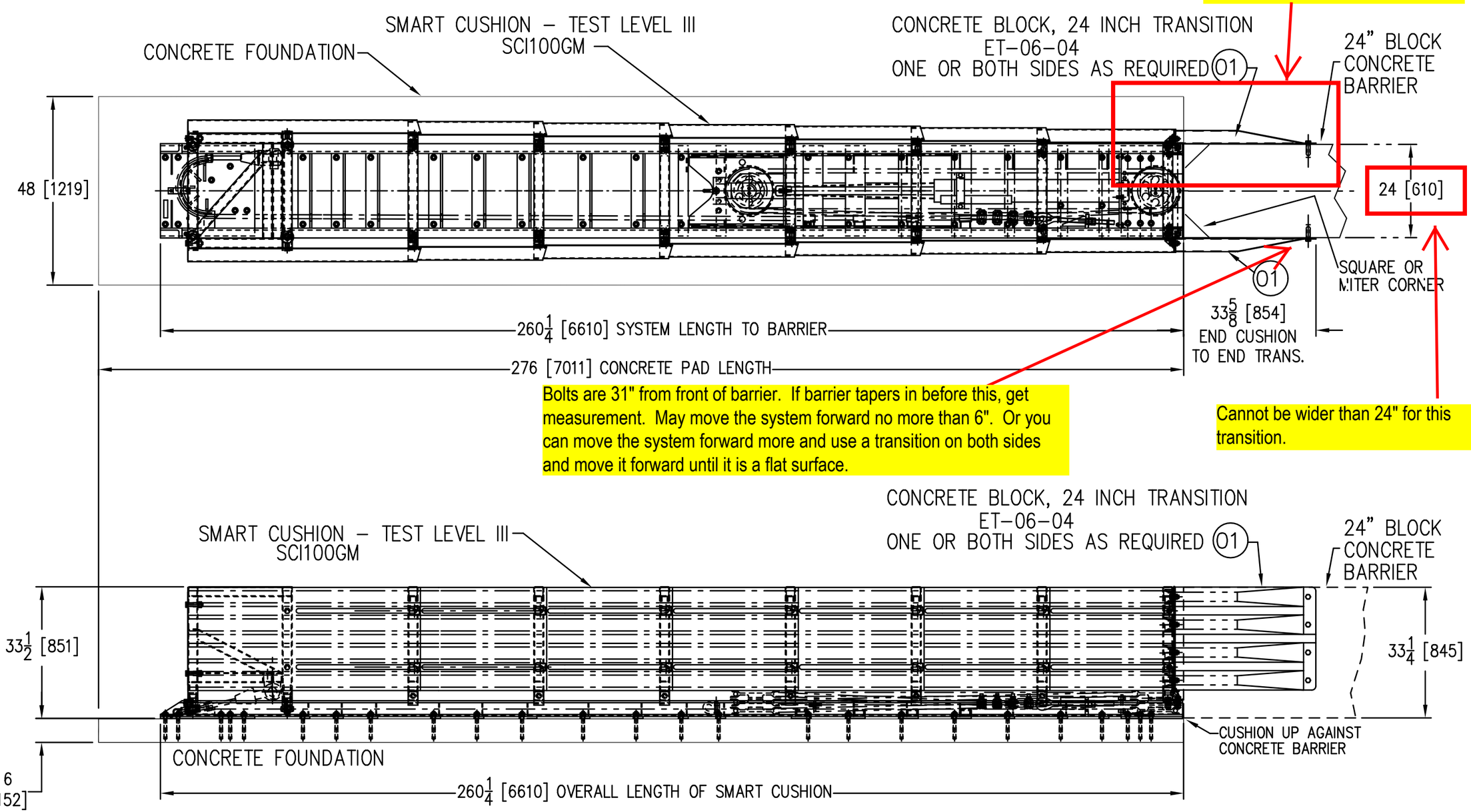

Bolts are 31" from front of barrier. If barrier tapers in before this, get measurement. May move the system forward no more than 6". Or you can move the system forward more and use a transition on both sides and move it forward until it is a flat surface.

Cannot be wider than 24" for this transition.

LEVEL III ELEVATION

REV. LETTER	DESCRIPTION	DATE	BY
A	INITIAL RELEASE	03/05/08	JAR
B	RE-CONFIGURE DIMENSIONS	04/08/08	JAR

REVISIONS

DRAWING NO. ET0604_TLIII REV. B
FILE: ET0604_TLIIIB.DWG
DRAWN: JAR 02/27/08
CHECKED: JS 02/27/08
SCALE: NTS
SHEET 1 OF 1
NEXT ASSEMBLY DRAWING NO. NA

PROJECT: END TREATMENT w/COMPLETE SYSTEM

LEVEL III SYSTEM COMPLETE
CONCRETE BLOCK TRANSITION, 24 INCH

CLIENT: STABLER_COMPANIES_INC.

COMMERCIAL TOLERANCES APPLY TO STOCK SIZES
TOLERANCES
.X ± .03
.XX ± .01
.XXX ± .005
FRACTIONS ± 1/16
ANGLES ± 1/2°

ALL DIMENSIONS ARE INCHES UNLESS OTHERWISE NOTED

SCI Products Inc.
A Division of Stable Composites Inc.
635 LUCKNOW ROAD, HARRISBURG, PA 17110-1835
PHONE 717-234-3106 FAX 717-234-8518

THIS DRAWING, MAY NOT BE COPIED IN ANY MANNER WITHOUT THE EXPRESSED CONSENT OF SCI PRODUCTS INC. NOR DISCLOSED TO THE PUBLIC OR ANY PERSON OTHER THAN THOSE PERSONS WHO HAVE A NEED TO KNOW THE INFORMATION CONTAINED HEREIN. THIS DRAWING IS PROPRIETARY AND MUST BE RETURNED TO SCI PRODUCTS INC. UPON REQUEST.

Cross Slope at Top Surface not to Exceed 1 in 10
Foundation must be a Level Plane

* * * * * Wide Hazards and Transitions may require the foundation to be longer. See Transition Drawings.

SPECIFICATIONS

All reinforcing steel - straight #4 ASTM-A36

Embedment requirements:

- 6" reinforced concrete pad with anchor embedment of 5 1/2"
- 8" non-reinforced concrete pad with anchor embedment of 5 1/2"
- 3" asphalt over 3" concrete with anchor embedment of 16 1/2"
- 6" asphalt over 6" of compacted subbase with anchor embedment of 16 1/2"
- 8" asphalt with anchor embedment of 16 1/2"

The contractor shall furnish a certification for material installed to the following requirements:

- 6" reinforced concrete (PCC) sampling per ASTM C31-84, testing per ASTM C39-84
- 8" non-reinforced concrete (PCC) sampling per ASTM C31-84, testing per ASTM 39-84
- 3" asphalt over 3" concrete - Type SP 12.5 Level C or higher
- 6" asphalt over 6" of compacted subbase - same as above
- 8" asphalt (AC) - Type SP 12.5 Traffic Level C or higher

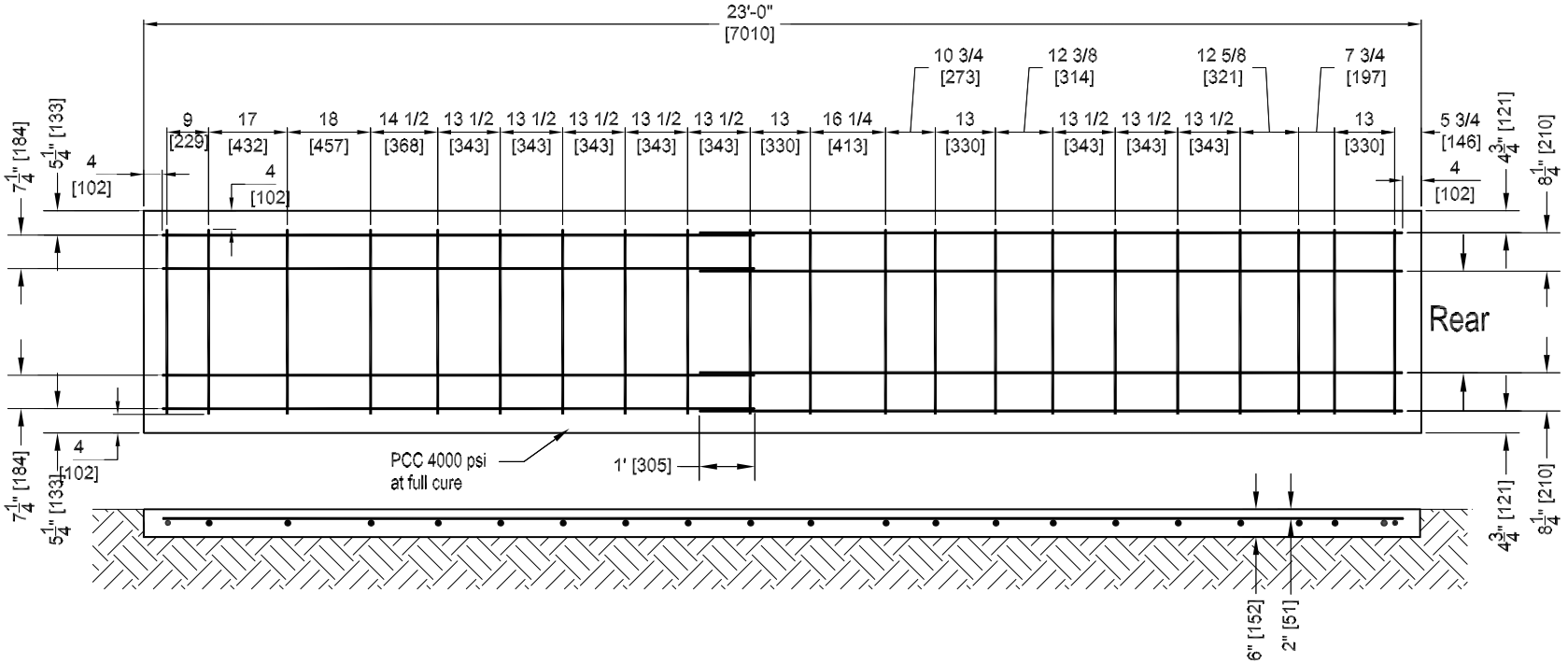

SCI100GM
Level 3 System

CRASH CUSHION SYSTEM
(TYPE TAU II)

Item	Qty	Part Description	Part#	U/M
1	1.00	30in Universal TAU-II 100kph System Components	30T100	EACH
2	1.00	Compact Backstop, 30"	COB30	EACH
3	1.00	Tau II Nose Piece per BSI Prin	B010711	EACH
4	1.00	Concrete Anc Pkg, COB	CCOB	EACH

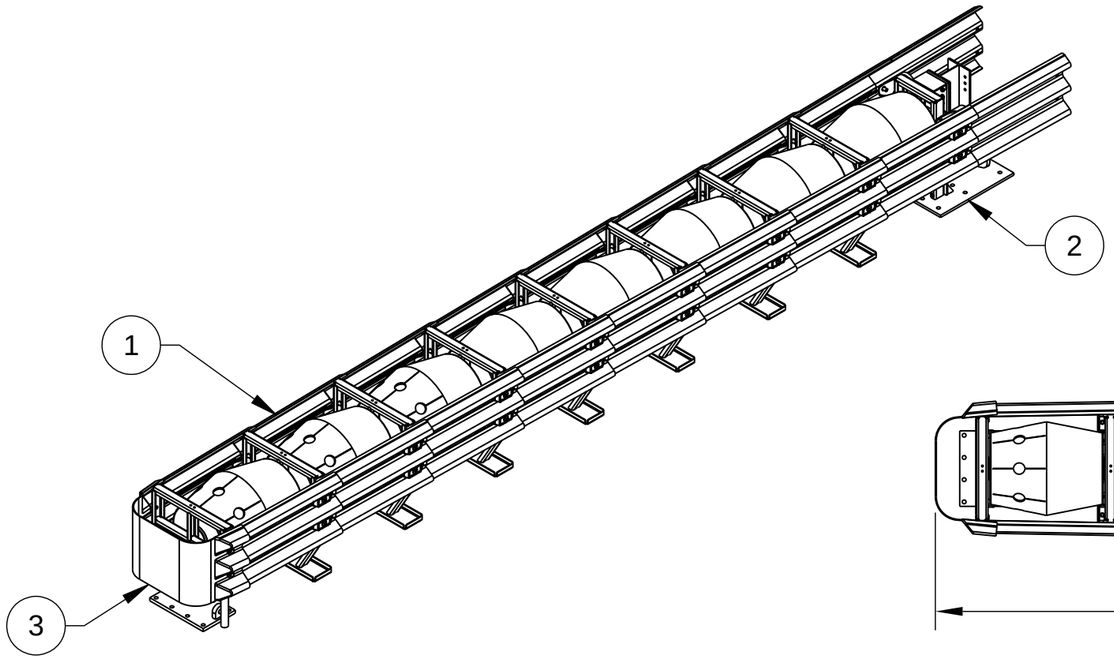

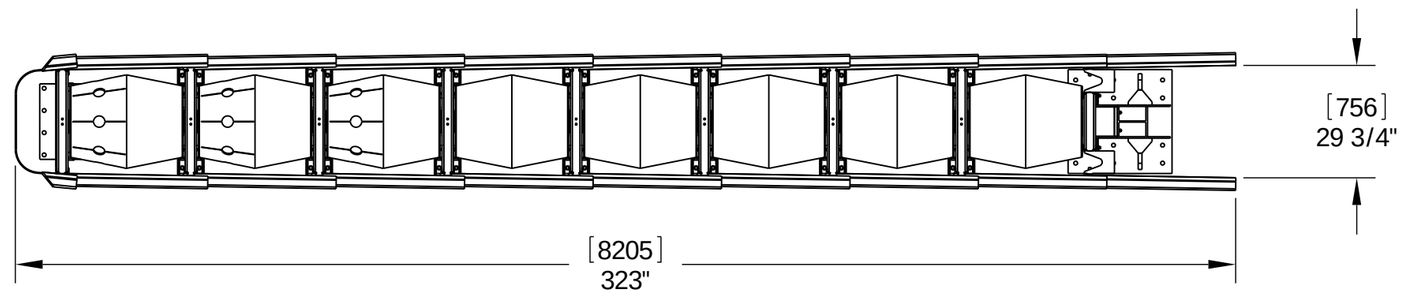

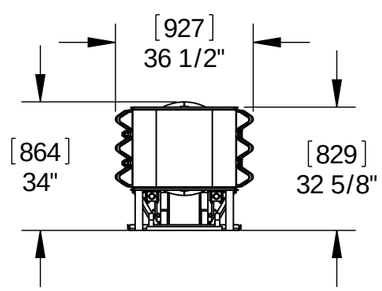

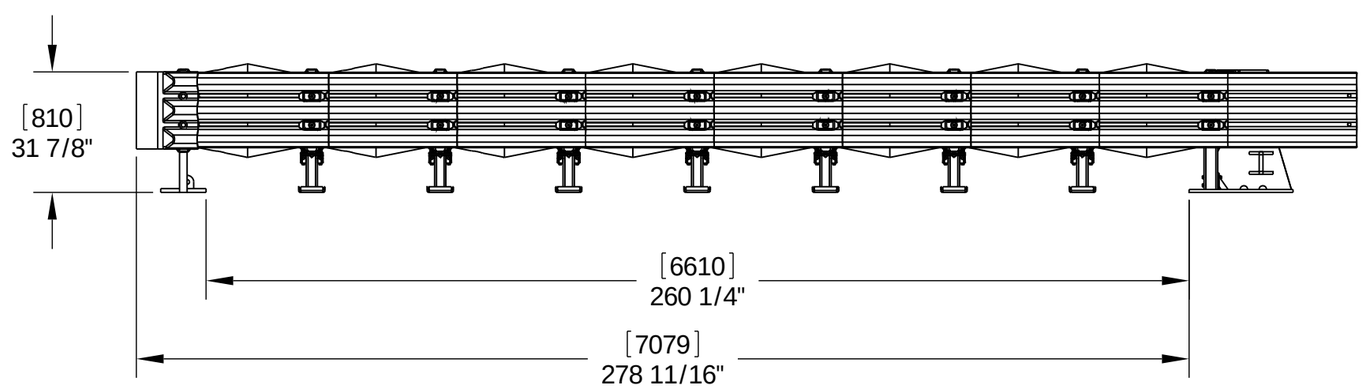

NOTES:

1. ITEM #4 NOT SHOWN.

© 2005 Barrier Sytems Inc.

The information heron is proprietary to Barrier Systems Inc. shall not be disclosed, duplicated or used otherwise without the express written approval of Barrier Systems Inc.

REV.	CHANGES	DATE	BY	REQ'D	NEXT ASSY.	ITEM
A	SEE ECN 00675	9/14/05	CMB			

SCALE: 1:40

	DATE	INIT.
DRAWN BY	9/14/05	CMB
		GAD

Standard Tolerance
Angular +/- 1/2 Deg.
Fractional +/- 1/16
Dec. XXX= +/- .010
Dec. .XX= +/- .030

TITLE: TAU-II 30" 100kph COMPACT BACKSTOP, CONCRETE, BLACK NOSE

MODEL	DRAWING NUMBER	REV
	30T100CBC	A

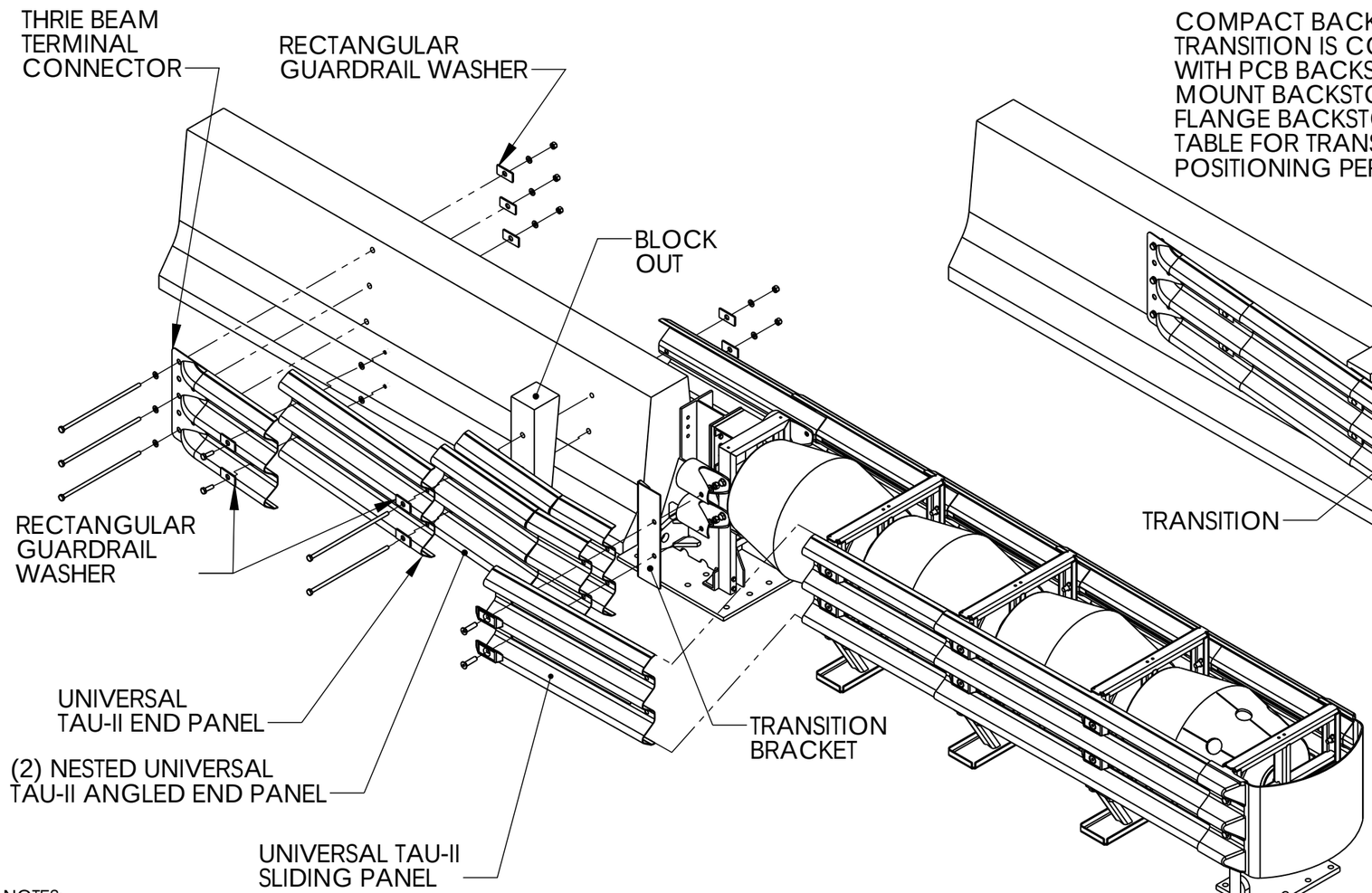

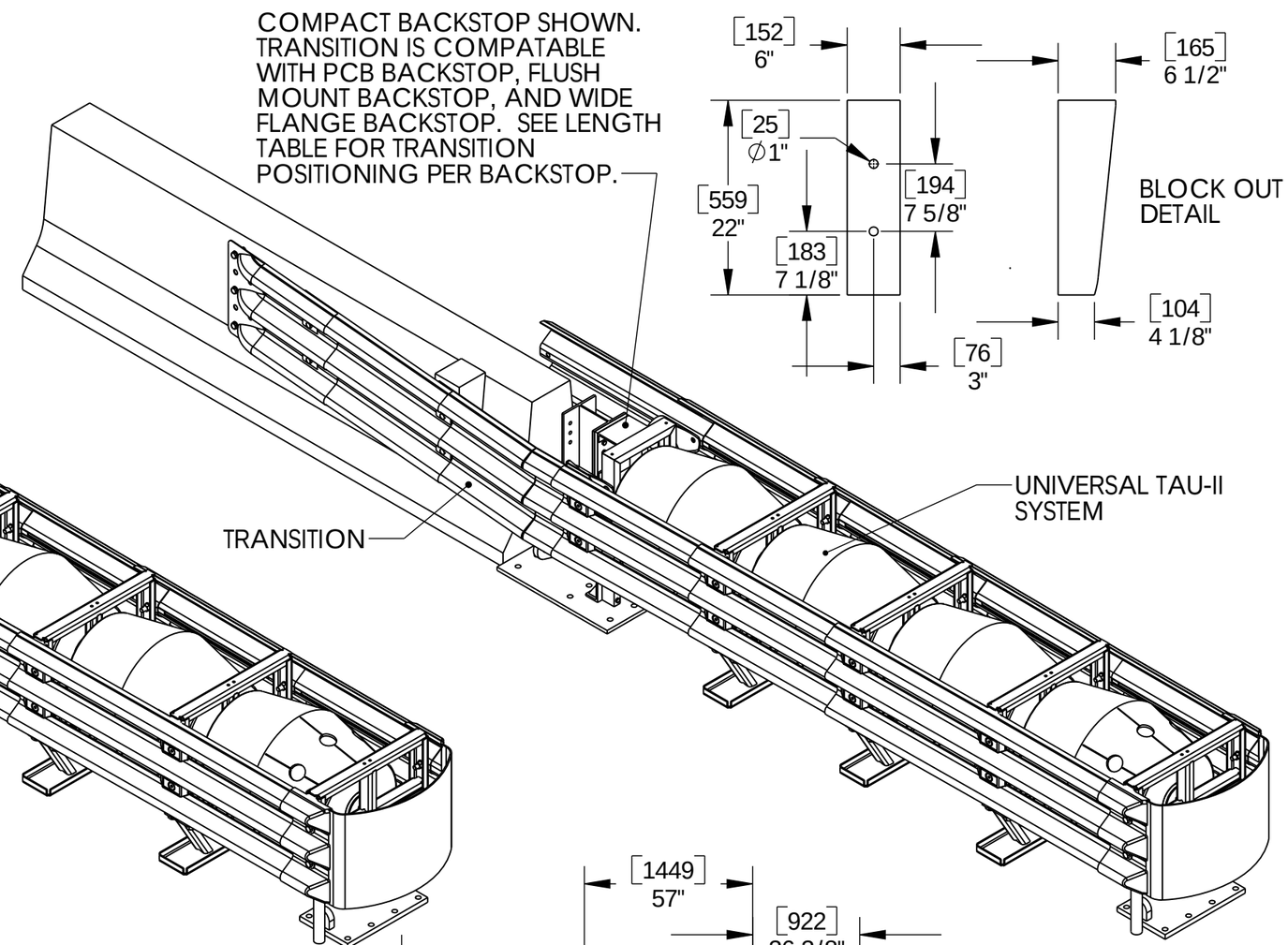

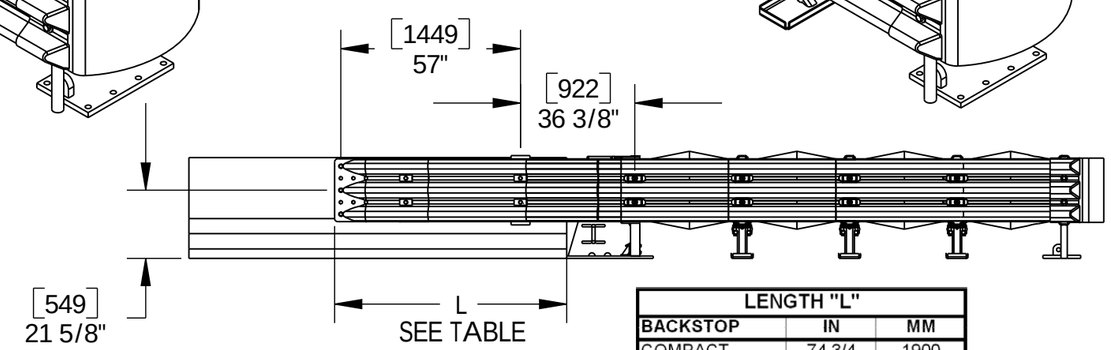

LENGTH "L"		
BACKSTOP	IN	MM
COMPACT	74 3/4	1900
PCB	94 3/4	2400
FLUSH MOUNT	89 3/8	2270
WIDE FLANGE	128 1/2	3260

NOTES:

1.) UNIVERSAL TAU-II SYSTEM TO BE INSTALLED PER MANUFACTURERS INSTRUCTIONS.
2.) TRANSITION SHOWN IS COMPATABLE WITH COMPACT BACKSTOP (SHOWN), FLUSH MOUNT BACKSTOP, PCB BACKSTOP, AND WIDE FLANGE BACKSTOP. IT IS APPLICABLE WITH ASPHALT ANCHORING PACKAGES FOR PCB BACKSTOP AND PCB BRACE KIT FOR COMPACT BACKSTOP.
3.)THRIE BEAM TERMINAL CONNECTOR PER AASHTO HARDWARE SPECIFICATION RTE01.
4.) STANDARD TIMBER OR PLASTIC OFFSET BLOCKS FIELD TRIMMED FOR USE. BLOCK OUT DETIAL SHOWS DIMENSIONS FOR F-SHAPE SAFETY SHAPED BARRIER. ACTUAL DIMENSIONS SHOULD REFLECT SHAPE OF BARRIER TRANSITIONED TO.
5.) PANELS AND BLOCKOUT ATTACHED TO BARRIER WALL WITH 5/8" [16mm] BOLTS WITH BEAM WASHER AND NUT WITH WASHER AND BEAM WASHER. 20" [500mm] BOLTS MAY BE FIELD TRIMMED. LENGTH MAY VARY WITH DIFFERENT BARRIER SHAPES. HOLES DRILLED THROUGH MEDIAN BARRIER ARE 3/4" [20mm]. MECHANICAL OR CHEMICALLY BONDED ANCHORS MAY BE USED THAT MEET OREXCEED 15,000 LBF SHEAR AND PULL OUT STRENGTH.
6.) ATTACH THRIE BEAM TERMINAL CONNECTOR TO MEDIAN BARRIER WITH (3) 5/8" [16mm] BOLTS WITH WASHERS AND NUT WITH WASHERS AND BEAM WASHERS. REFERENCE NOTE 5 FOR DETAILS.
7.) ATTACH THRIE BEAM TERMINAL CONNECTOR TO UNIVERSAL TAU-II END PANEL WITH 5/8" [16mm] X 2" [50mm] BOLTS WITH BEAM WASHER AND NUT WITH WASHER.
8.) TRANSITION BRACKET TO BE INSTALLED OVER PIPE PANEL MOUNTS UNDER THE (2) NESTED ANGLED END PANELS AND THE SLIDING PANEL. BEND IN TRANSITION BRACKET FACES REARWARD AND FITS AROUND PIPE PANEL MOUNTS. JOINT IS SECURED WITH SLIDING BOLTS. SLIDING BOLTS TO BE TORQUED PER MANUFACTURERS SPECIFICATIONS.

© 2005 Barrier Sytems Inc.

The information heron is proprietary to Barrier Systems Inc. shall not be disclosed, duplicated or used otherwise without the express written approval of Barrier Systems Inc.

REV.	CHANGES	DATE	BY	REQ'D	NEXT ASSY.	ITEM
				1	NA	1

SCALE: 1:25

	DATE	INIT.
DRAWN BY	06/06/05	GAD
		GAD

Standard Tolerance
Angular +/- 1/2 Deg.
Fractional +/- 1/16
Dec. XXX= +/- .010
Dec. .XX= +/- .030

TITLE: UNIVERSAL TAU-II TRANSITION TO MEDIAN BARRIER

MODEL	DRAWING NUMBER	REV
	B050606	

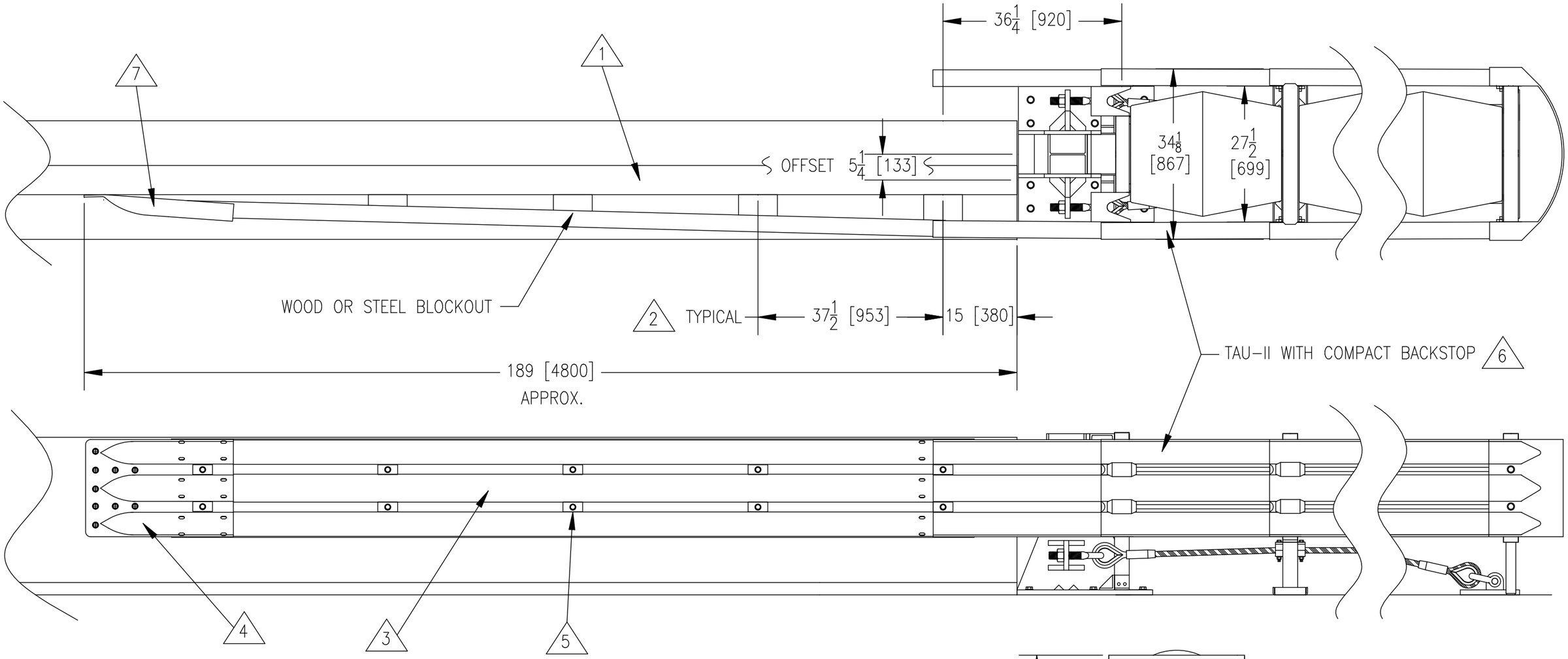

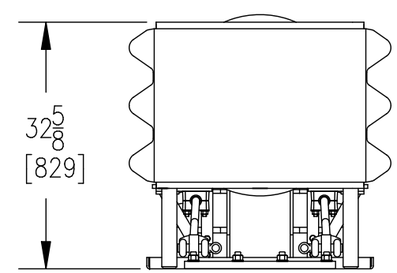

NOTES:

1.) REINFORCEMENT OF SAFETY SHAPED BARRIER END MAY BE NEEDED. REFER TO BSI SPECIFICATION B010714 OR B010819 FOR FOUNDATION REQUIREMENTS.

2.) SUPPORT SPACING AND BLOCKOUTS SHOWN ARE IN ACCORDANCE WITH NEVADA DOT SPECIFICATION R-8.4.3.

3.) 4-SPACE THRIE BEAM GUARDRAIL PER AASHTO HARDWARE SPECIFICATION RTM01b.

4.) THRIE BEAM BRIDGE SHOE PER AASHTO HARDWARE SPECIFICATION RTE01b.

5.) RECTANGULAR GUARDRAIL WASHER PER AASHTO HARDWARE SPECIFICATION FWR03.

6.) TAU-II SYSTEM TO BE INSTALLED PER MANUFACTURER INSTRUCTIONS.

7.) OVERLAP THRIE BEAM OR BRIDGE SHOE ACCORDING TO DIRECTION OF TRAFFIC. UNDERLYING PART SHOULD BE DOWNSTREAM OF TRAFFIC AS SHOWN.

© 2001 Barrier Systems, Inc.

The information heron is proprietary to Barrier Systems Inc. and shall not be disclosed, duplicated or used otherwise without the express written approval of Barrier Systems Inc

REV.	CHANGES	DATE	BY	REQ'D	NEXT ASSY.	ITEM
B	SEE ECN 00368	4/26/02	GAD			
A	RELEASE PREP.	11/19/01	GAD	NA	NA	NA

SCALE: 1=20

	DATE	INIT.
DRAWN BY	07/02/01	RGC
APPR'D BY	11/20/01	JSM

Standard Tolerance
Angular ± 1/2°
Fractional ± 1/16
Dec .XXX= ± .010
Dec .XX= ± .030

TITLE: TAU-II WITH COMPACT BACKSTOP, TRANSITION TO SAFETY SHAPE P.C.B, OFFSET

MODEL	DRAWING NUMBER	REV.
	B010726	B

NOTES:

1.) REFERENCE UNIVERSAL TAU-II FOUNDATION DIMENSION CHART FOR SPECIFIC SYSTEM FOUNDATION DIMENSIONS.
2.) FOUNDATION MATERIAL, SPECIFICATIONS, AND ANCHORAGE MUST BE IN ACCORDANCE WITH BSI FOUNDATION SPECIFICATIONS FOR A CONCRETE PAD. REFERENCE BSI DRAWING A040113.
3.) THE CONCRETE REINFORCEMENT SHOWN IS RECOMMENDED TO ENSURE ADEQUATE FOUNDATION INTEGRITY FOR PROPER IMPACT PERFORMANCE. VARIATIONS MAY BE REVIEWED AND DETERMINATIONS MADE AS TO EQUIVALENCE BY PROJECT ENGINEER.
4.) ALL REBAR IS #5 [15mm].
5.) IF FOUNDATION EXTENDS FROM A CONCRETE CURB, WALL, ABUTMENT, OR OTHER CONCRETE HAZARD, PLACE BACKSTOP AGAINST THE HAZARD AND SUBTRACT 10" FROM DIMENSION "L".
6.) TORQUE ANCHORS TO 120 FT-LBF [160 N-m].
7.) ANCHORING COMPOUND MUST MEET BSI SPECIFICATIONS.

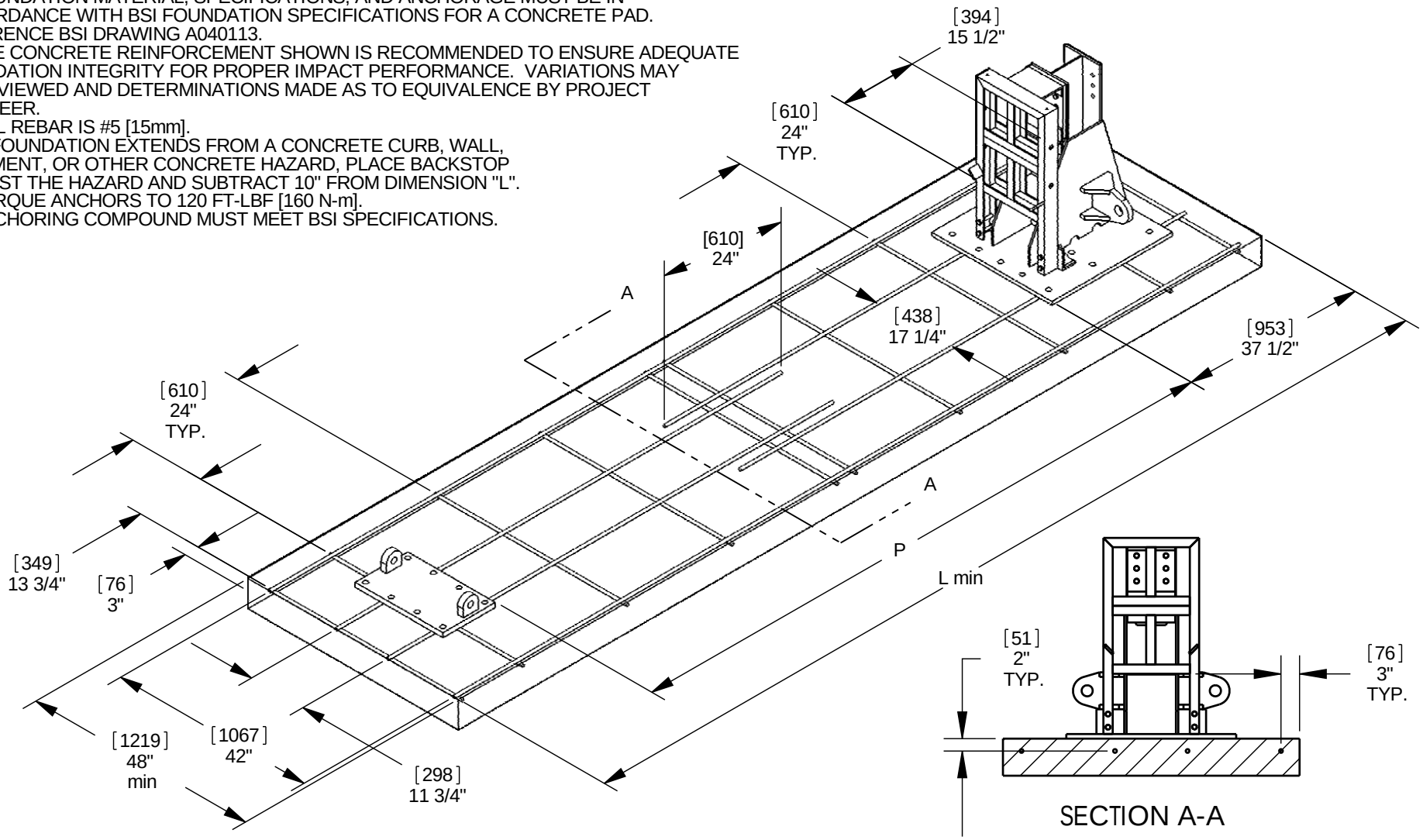

REV.	CHANGES	DATE	BY	REQ'D	NEXT ASSY.	ITEM
				1	B010708	1

SCALE: 1:24

	DATE	INIT.
DRAWN BY	01/08/04	GAD
APPR'D BY		JSM

Standard Tolerance

Angular	±	1/2°
Fractional	±	1/16"
Dec .XXX=	±	.010
Dec .XX=	±	.030

BARRIER SYSTEMS
A LINDSAY TRANSPORTATION SOLUTIONS COMPANY

TITLE :
UNIVERSAL TAU-II FOUNDATION, COMPACT BACKSTOP

SHEET	DRAWING NUMBER	REV.
1 OF 1	A040102	0

FOUNDATION SPECIFICATIONS:

THE TAU-II CRASH CUSHION SYSTEM HAS BEEN DESIGNED TO ATTACH TO CONCRETE OR ASPHALT FOUNDATIONS. USE THE ANCHORAGE SPECIFIED BELOW DEPENDING ON THE FOUNDATION AT THE JOB SITE. REFERENCE UNIVERSAL TAU-II FOUNDATION DRAWINGS FOR FURTHER DETAIL.

1.) CONCRETE PAD

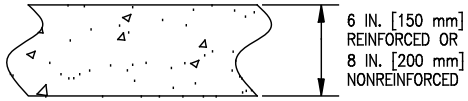

FOUNDATION: MINIMUM 6 IN. [150 mm] REINFORCED PCC PAD OR 8 IN. [200 mm] NONREINFORCED PCC PAD

ANCHORAGE: 3/4 IN. [20 mm] X 8 $\frac{1}{4}$ IN. [210 mm] GALVANIZED ANCHOR WITH 6 IN. [150 mm] EMBEDMENT

2.) ASPHALT OVER SUBBASE

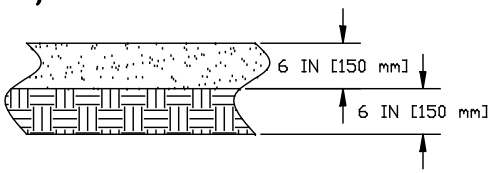

FOUNDATION: MINIMUM 6 IN [150 mm] AC OVER 6 IN. [150 mm] COMPACTED DGA SUBBASE

ANCHORAGE: 3/4 IN. [20 mm] X 18 IN. [460 mm] GALVANIZED ANCHORS WITH 16 IN. [410 mm] EMBEDMENT

ASPHALT ANCHORING KIT REQUIRED

3.) ASPHALT ONLY

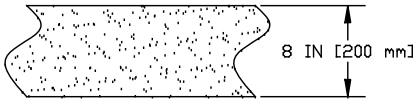

FOUNDATION: MINIMUM 8 IN. [200 mm] AC

ANCHORAGE: 3/4 IN. [20 mm] X 18 IN. [460 mm] GALVANIZED ANCHORS WITH 16 IN. [410 mm] EMBEDMENT

ASPHALT ANCHORING KIT REQUIRED

4.) ASPHALT OVER P.C. CONCRETE

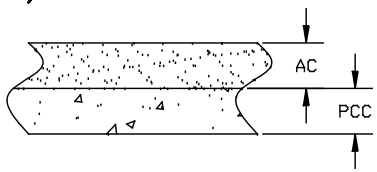

FOUNDATION: AC OVER PCC.

ANCHORAGE: 3/4 IN. [20 mm] GALVANIZED ANCHORS WITH MINIMUM 6 IN. [150 mm] EMBEDMENT IN PCC - ASPHALT ANCHORING KIT NOT REQUIRED
OR
IF 6 IN. [150 mm] EMBEDMENT IN PCC IS NOT POSSIBLE USE
3/4 IN. [20 mm] X 18 IN. [460 mm] GALVANIZED ANCHORS WITH 16 IN. [410 mm] EMBEDMENT - ASPHALT ANCHORING KIT REQUIRED

MATERIAL SPECIFICATIONS

PORTLAND CEMENT CONCRETE (PCC)

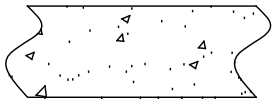

STONE AGGREGATE CONCRETE MIX, 4,000 PSI [28 MPa] MINIMUM COMPRESSIVE STRENGTH (SAMPLING PER ASTM C31-84 OR ASTM C42-84A, TESTING PER ASTM C39-84)

ASPHALTIC CONCRETE (AC)

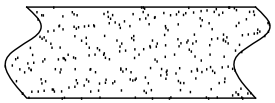

AR-4000 A.C. (PER ASTM D3381 '83) .75" MAXIMUM, MEDIUM (TYPE A OR B) AGGREGATE

SIEVE SIZE	% PASSING
1"	100
3/4"	95-100
3/8"	65-80
No. 4	49-54
No. 8	36-40
No. 30	18-21
No. 200	3-8

COMPACTED SUBBASE (DGA)

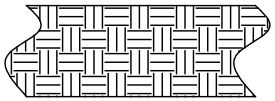

6 IN. [150 mm] MINIMUM DEPTH, 95% COMPACTION, CLASS 2 AGGREGATE

SIEVE SIZE	% PASSING
3"	100
2 1/2"	90-100
No. 4	40-90
No. 200	0-25

REV.	CHANGES	DATE	BY
A	SEE ECN 00589	03/02/04	GAD

REQ'D	NEXT ASSY.	ITEM

SCALE: FULL

	DATE	INIT.
DRAWN BY	01/09/04	GAD
APPR'D BY		JSM

Standard Tolerance
Angular ± 1/2°
Fractional ± 1/16
Dec .XXX= ± .010
Dec .XX= ± .030

TITLE:
FOUNDATION SPECIFICATIONS

MODEL	DRAWING NUMBER	REV.
	A040113	A