INFORMATION HANDOUT

For Contract No. 05-0Q5904
At 05-SCr-9-3.8/18.7

Identified by
Project ID 0500000317

PERMITS

Department of Parks and Recreation

Right of Entry Permit

MATERIALS INFORMATION

Final Foundation Report

RIGHT OF ENTRY PERMIT

Agency: Department of Parks and Recreation

Project: Temporary Use of state park land to permit construction of certain road stability and drainage improvements along State Highway #9; Henry Cowell Redwoods State Park, State Parcel 11422 & 11423

This Right of Entry Permit (Permit) is made and entered into this 28th day of March, 2014, between the State of California, acting by and through its Director of the Department of Parks and Recreation, hereinafter called State and the California Department of Transportation, its officers, employees, agents and contractors, hereinafter called Permittee.

RECITALS

- Whereas, the State owns, operates, and maintains the State Park unit known as Henry Cowell Redwoods State Park, in the County of Santa Cruz, State of California; and
- Whereas, Permittee has applied to State for permission to utilize a +/- .37 acre portion of this State Park unit for purposes of undertaking and implementing certain road improvements and construction activities required for improved drainage and road stability purposes to State Highway #9 located within Henry Cowell Redwoods State Park,
- Whereas, both parties have entered into formal discussions and have together agreed in concept, to initiate actions to convey to Permittee the noted +/- .37 acres of park land through the State of California Transfer of Jurisdiction process associated with the Land Bank Exchange Agreement, No. A-13545,
- Now therefore, the State desires to accommodate Permittee's application for permission to temporarily enter and utilize State Park lands for noted purposes acknowledging that the formal Transfer of Jurisdiction process is in process.

TERMS AND CONDITIONS

This Permit hereby gives the Permittee the rights stated below which are revocable at will, and is/are not transferable to any other party. This Permit does not create an interest in the real property herein described or depicted and is further subject to the following terms and conditions:

1. **Project Description:** By this Permit, State hereby gives permission to Permittee to enter upon those lands as depicted on the attached Exhibit "B" (the Property) solely for the purpose of undertaking a road improvement project the project limits of which are shown on Exhibit "B".

2. **Permit Subject to Laws and Permits:** Permittee shall, at Permittee's sole cost and expense, comply with the requirements *and mitigations identified by Permittee's environmental document, including* all municipal, state, and federal authorities now in force or which may be in force pertaining to the project and use of the Property as provided by this Permit. This Permit is expressly made subject to any and all laws and regulatory permits or approvals, including any conditions of such permits and approvals issued or required to be issued by such regulatory agencies.

   Prior to commencement of any work, Permittee shall obtain all such legally required permits or approvals and submit to the State full and complete copies of all permits and approvals, including documentation related to or referenced in such permits and approvals, along with the corresponding agency contact and telephone numbers, and related California Environmental Quality Act (CEQA) and/or National Environmental Policy Act (NEPA) documentation.

3. **Term of Permit:** This Permit shall only be for the period beginning on December 1, 2014 and ending on November 1, 2015, or as may be reasonably extended by written mutual agreement.

4. **Consideration:** Permittee pledges to diligently follow through and undertake all necessary actions to complete in a timely manner, the acquisition of the subject property through the existing Land Bank Exchange involving the two state agencies. Permittee further agrees to fully implement all measures

contained within the project's Categorical Exemption/Categorical Exclusion designed to avoid or minimize potential impacts to marbled murrelet, marbled murrelet critical habitat, migratory birds and biological resources in the vicinity of the proposed project as delineated in Exhibit "C" attached.

5. **Permit Subject to Existing Claims:** This Permit is subject to existing contracts, permits, licenses, encumbrances and claims which may affect the Property.

6. **Waiver of Claims and Indemnity:** Permittee waives all claims against State, its officers, agents and employees, for loss or damage caused by, arising out of, or in any way connected with the exercise of this Permit, and Permittee agrees to protect, save harmless, indemnify, and defend State, its officers, agents and employees, or contractors from any and all loss, damage or liability which may be suffered or incurred by State, its officers, agents and employees, or contractors, caused by, arising out of, or in any way connected with the exercise by Permittee of the rights hereby granted, and the project for which this Permit is granted, except those arising out of the sole active negligence of State. Permittee will further cause such indemnification and waiver of claims in favor of State to be inserted in each contract that Permittee executes for the provision of services in connection with the project for which this Permit is issued.

7. **Contractors:** Permittee shall incorporate the terms, conditions, and requirements contained herein when contracting out all or any portion of the work permitted hereunder. Permittee shall be responsible for ensuring contractor/subcontractor compliance with terms and conditions contained herein. Failure of contractors to abide by State's terms and conditions shall constitute default by Permittee (see Paragraph 20) allowing State to terminate this Permit and seek all legal remedies.

8. **Insurance Requirements:** Permittee shall require its contractor to have the commercial general liability, property, vehicle and workers' compensation insurance policy or policies that meet the requirements of the State of California contracting laws applicable to the Project and state agencies such as Permittee.

   Any such policies shall contain an endorsement naming DPR as an additionally named insured at no cost to DPR. Any such policies shall contain an endorsement naming DPR as loss payable, and provide that payments for any loss or damage to the Property, its resources, improvements and/or facilities caused by Permittee's contractor shall be made to DPR and Permittee as co-payees, to be used to repair, rebuild, restore or replace the insured property at DPR's discretion. If the payments are not used for repair, rebuilding, restoration or replacement of the insured property, they shall be made payable directly to DPR as reimbursement for the loss or damage and may be used for other rebuilding, repair, or replacement as determined by DPR, at its sole discretion, to be necessary and appropriate.

   Permittee shall provide to DPR evidence that the insurance required to be carried by this provision, including any endorsement affecting the additional insured status, is in full force and effect and that premiums there fore have been paid.

9. **Reservation of Rights:** State Reserves the right to use the Property in any manner, provided such use does not unreasonably interfere with Permittee's rights herein.

10. **Access Limits and Conditions:** Access to the Property shall be limited to the access designated by State and as depicted on "Exhibit B".

11. **Notice of Work:** Prior to any entry upon the Property for any of the purposes hereinabove set forth, Permittee shall notify the authorities in charge of State Park named below by written notice at least prior to commencement of work. Permittee shall also notify authorities in charge of the State Park at least forty-eight (48) hours of any change in the project schedule or prior to cessation of work.

District Name:	, Chet Bardo Sector Superintendent Santa Cruz District
Address:	303 Big Trees Park Road Felton, CA 95018
Telephone:	831) 335-6385
Fax:	831) 335-6395

12. **Limits of Work:** In no event shall this Permit authorize work in excess or contrary to the terms and conditions of any regulatory agency, permit, or approval. Under no circumstances, whether or not permitted or authorized by any regulatory agency, permit, or approval, shall work exceed that which is reasonably necessary to carry out the purpose or project limits set forth in Exhibit "B" herein.

13. **Public Safety:** Permittee shall erect orange plastic temporary construction fencing prior to commencement of work to prohibit public access to the construction zone. Permittee shall remove

such fencing within two (2) days of the completion of work. Permittee shall, or cause its contractors or subcontractors to take any and all other necessary and reasonable steps to protect the public from harm due to the work.

14. **Compliance with Monitoring and Mitigation Measures:** Natural resource monitoring and mitigation measures identified by the District's Environmental Scientist shall be completed in consultation with and to the satisfaction of the State Environmental scientist by dates stated therein.

    Activities conducted within the boundaries defined in this Permit will comply with all State and Federal environmental laws, including but not limited to the Endangered Species Act, CEQA, and Section 5024 of the Public Resources Code.

    Archaeological consultants working within the boundaries of State Park Property shall obtain a permit from the California State Parks Cultural Resource Division prior to commencing any investigations of the Premises.

    Permittee shall consult with State District resource specialists (environmental scientist, historian, and archaeologist) to determine site-specific conditions and avoidance measures for the protection of natural and cultural resources.

    State will advise Permittee if any new historical resources (including archaeological sites), special status species, Threatened/Endangered Species protocols, or other resource issues are identified within the proposed project site. Permittee shall consult with State resource specialists to determine the appropriate level of avoidance/mitigation necessary to protect the resource(s) during future work.

    In making any excavation on said Property of State, Permittee shall make all excavation activities available to the State archaeologist for observation and monitoring. During excavation, the State archaeological monitor may observe and report to the State on all excavation activities. State archaeological monitor shall be empowered to stop construction activities in the event the monitor determines that significant cultural resource values are being disturbed. In the event that significant cultural resource values are being disturbed, all work within thirty feet (30') of the find shall be immediately halted.

    In the event that previously undocumented cultural resources are encountered during the project construction (including but not limited to dark soil containing shellfish, bone, flaked stone, ground stone, or deposits of historic trash), work within the immediate vicinity of the find would be temporarily halted or diverted until a State qualified cultural resource specialist has evaluated the find and implemented appropriate treatment and disposition of the artifact(s). Once any significant cultural resources are found in a project location, a qualified historian and/or archaeologist would monitor any ground-disturbing work in that area from that point forward.

    Should Permittee, Permittee's contractors or subcontractors find any cultural or historical resources in the absence of a State archaeologist, Permittee agrees to halt all work within thirty feet (30') of the find and immediately notify the State Park Archaeologist or State Park Ranger. Permittee further covenants that work shall not resume in the area of the find until authorized by the State Park Archaeologist.

    In the event that human remains are discovered, work shall immediately cease in the area of the find and the project manager/site supervisor will notify the appropriate State personnel. Any human remains and/or funerary objects will be left in place or returned to the point of discovery and covered with soil. The State District Superintendent or authorized representative will notify the County Coroner, in accordance with California Health and Safety Code §7050.5 and the Native American Heritage Commission (NAHC) or Tribal Representative. If a Native American monitor is on site at the time of the discovery, the monitor will be responsible for notifying the appropriate Native American authorities.

    If the coroner or tribal representative determines the remains represent Native American interment, the NAHC in Sacramento and/or tribe will be consulted to identify the most likely descendants and appropriate disposition of the remains. Work will not resume in the area of the find until proper disposition is complete (PRC §5097.98). No human remains or funerary objects will be cleaned, photographed, analyzed, or removed from the site prior to determination. If it is determined that the find indicates a sacred or religious site, the site will be avoided to the maximum extent practicable. Formal consultation with the State Historic Preservation Office and review by the Native American Heritage Commission/Tribal Cultural representatives shall also occur as necessary to define additional site mitigation or future restrictions.

    Permittee, Permittee's contractor or subcontractor shall provide a written work schedule to State so that the State archaeological monitor can arrange to be on site on the necessary days. Permittee agrees to include the State archaeologist in any preconstruction meetings with the prime or

subcontractors. The archaeologist shall be provided at least two (2) weeks advanced notice of the commencement of work undertaken pursuant to this Permit.

15. **Restoration of Property:** Permittee shall be responsible for restoration, repair, and revegetation of the Property in consultation with and to the satisfaction of the State Environmental scientist within one (1) year after completion of the project.

16. **Right to Halt Work:** The State reserves the right to halt work and demand mitigation measures at any time, with or without prior notice to Permittee, in the event the State determines that any provision contained herein is violated, or any other threat to the health and safety of visitors or users of the State Park arises.

17. **Use Restrictions:** The use of the Property by Permittee's guest or invitees shall be restricted to the daytime hours between sunrise and sunset on a day-by-day basis, unless otherwise approved in advance in writing by State. No person may use or occupy the Property overnight.

    Activities on the Property shall be conducted only in a manner, which will not interfere with the orderly operation of the recreation area. Permittee agrees to immediately discontinue or remove any disorderly conduct and/or contraband. Contraband includes, but is not limited to: beer, alcoholic beverages, illegal and illicit drugs, firearms, explosives and edged weapons.

    Use of all established roads and trails by any motorized vehicle, (including but not limited to motorcycle, car, truck, jeep, tractor, or all-terrain vehicle) shall be limited to only the Permittee, Permittee's employees, agents or contractors for patrol, maintenance or repair purposes only and shall be subject to all other conditions and/or restrictions of this Permit.

    Permittee shall not use or allow the Property to be used, either in whole or in part, for any purpose other than as herein set forth, without the prior written consent of the State.

18. **DPR's Right to Enter:** At all times during the term of this Permit, there shall be and is hereby expressly reserved to State and to any of its agencies, contractors, agents, employees, representatives or licensees, the right at any and all times, and any and all places, to temporarily enter upon said Property to survey, inspect, or perform any other lawful State purposes.

    Permittee agrees to not interfere with State's right to enter.

    State agrees to indemnify Permittee for any damages that Permittee should incur as a direct result of State's negligent exercise of its rights under this paragraph.

19. **Protection of Property:** Permittee shall protect the Property, including all improvements and the natural resources thereon, at all times at Permittee's sole cost and expense, and Permittee shall strictly adhere to the following restrictions:

    (a) Permittee may not place or dump garbage, trash or refuse anywhere upon or within the Property, except in self-contained trash receptacles that are maintained to State's satisfaction by Permittee.

    (b) Permittee may not commit or create, or suffer to be committed or created, any waste, hazardous condition and/or nuisance to occur upon the Property.

    (c) Permittee may not cut, prune or remove any native trees or brush upon the Property, except for routine fire protection, trail clearing, maintenance or the elimination of safety hazards without first obtaining written permission by the District Superintendent.

    (d) Permittee may not disturb, move or remove any rocks or boulders upon the Property except for routine fire protection, trail clearing, maintenance or the elimination of safety hazards without first obtaining written permission by the District Superintendent.

    (e) Permittee may not grade or regrade, or alter in any way, the ground surface of the Property, except for regrading of the roads for fire protection, trail clearing, maintenance or the elimination of safety hazards without first obtaining written permission by the District Superintendent.

    (f) Permittee may not bait, poison, trap, hunt or engage in any other activity which results in the killing, maiming or injury of animals or wildlife upon the Property, except for mice and rats, and rattlesnakes in the event such snakes pose an immediate danger to persons on the Property without first obtaining written permission by the District Superintendent.

    (g) Permittee may not use or dispose of hazardous substances on the Property.

(h) Permittee shall exercise due diligence in the protection of the Property against damage or destruction by fire, vandalism or other cause.

20. **Default:** In the event of a default or breach by Permittee of any of the terms or conditions set forth in this Permit, State may at any time thereafter, without limiting State in the exercise of any right of remedy at law or in equity which State may have by reason of such default or breach:

(a) Maintain this Permit in full force and effect and recover the consideration, if any, and other monetary charges as they become due, without terminating Permittee's right to use of State Property, irrespective of whether Permittee shall have abandoned the Property.

(b) Terminate this Permit whereupon Permittee shall immediately surrender possession of the Property to State. In such event, State shall be entitled to recover from Permittee all damages incurred by State by reason of Permittee's default including, but not limited to, the following:

(i) any amount necessary to compensate State for all the detriment proximately caused by Permittee's failure to perform its obligations under this Permit or which in the ordinary course of events would be likely to result therefrom; plus

(ii) at State's election, such other amounts in addition to or in lieu of the foregoing as may be permitted from time to time by applicable law. Upon termination of this Permit, State shall have the right to make any reasonable repairs, alterations or modifications to the Property, which State, in its sole discretion, deems reasonable and necessary for the State's use of the Property.

20.1 State's Right to Cure Permittee's Default: At any time, after Permittee is in default or material breach of this Permit, State may, but is not required to, cure such default or breach at Permittee's cost. If State at any time, by reason of such default or breach, pays any sum or does any act that requires the payment of any sum, the sum paid by State shall be due immediately from Permittee to State at the time the sum is paid, and if paid at a late date shall bear the maximum interest allowed by California law from the date the sum is paid by State until State is reimbursed by Permittee.

21. **Revocation of Permit:** The State shall have the absolute right to revoke this Permit at will, with or without cause and for any reason upon ten (10) days written notice to Permittee. Written notice to Permittee may be accomplished by electronic or facsimile transmission, and the notice period set forth in this paragraph shall begin on the date of the written notice. If Permittee is in breach of the Permit or owes money to the State pursuant to this Permit, any prepaid monies paid by Permittee to State shall be held and applied by the State as an offset toward damages and/or amounts owed. Nothing stated herein shall limit the State's exercise of its legal and equitable remedies.

22. **Recovery of Legal Fees:** If any action including actions or proceedings under Title II of the United States Code is brought by the State to enforce or interpret any provisions of this Permit or to restrain the breach of any agreement contained herein, or for the recovery of possession of the Property, or to protect any rights given to the State against Permittee, and if the State shall prevail in such action on trial or appeal, the Permittee shall pay to the State such amount in attorney's fees in said action as the court shall determine to be reasonable, which shall be fixed by the court as part of the costs of said action.

23. **Voluntary Execution and Independence of Counsel:** By their respective signatures below each party hereto affirms that they have read and understood this Permit and have received independent counsel and advice from their attorneys with respect to the advisability of executing this Permit.

24. **Reliance on Investigations:** Permittee accepts this Permit, and the Property to which it pertains, in its as-is condition and has made such investigation of the facts pertaining to this Permit and all the matters pertaining thereto as it deems necessary.

25. **Entire Agreement:** The parties further declare and represent that no inducement, promise or agreement not herein expressed has been made to them and this Permit contains the entire agreement of the parties, and that the terms of this agreement are contractual and not a mere recital.

26. **Warranty of Authority:** The undersigned represents that they have the authority to, and does, bind the person or entity on whose behalf and for whom they are signing this Permit and the attendant documents provided for herein, and this Permit and said additional documents are, accordingly, binding on said person or entity.

27. **Assignment:** This Permit shall is not assignable. It may not be mortgaged, hypothecated, or transferred by Permittee, whether voluntary or involuntary or by operation of law, nor shall Permittee

let or sublet or grant any license of permit with respect to the use and occupancy of the Property or any portion thereof, without the written consent of State being first had and obtained.

28. Choice of Law: This Permit will be governed and construed by the laws of the State of California.

-

-

-

STATE OF CALIFORNIA
Department of Parks and Recreation

By: _____
Name: Chet Bardo
Title: District Superintendent

California Department of Transportation

By: Nancy Johnson 4/9/14
Name: Nancy Johnson
Title: Chief, SLO Acquisition Branch, R/Way

SUBJECT SITE

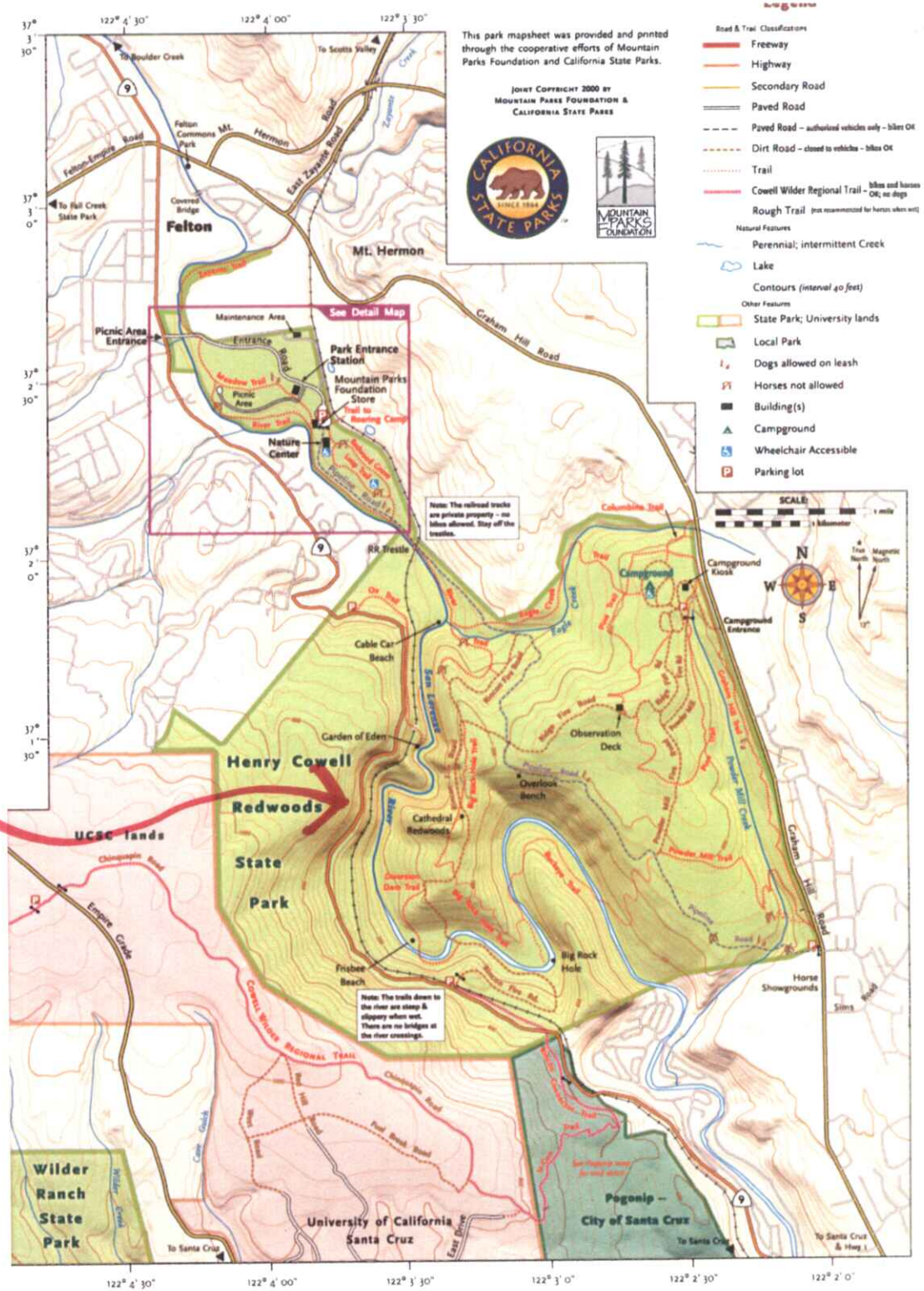

EXHIBIT A

NOTE: The State of California or its officers or agents shall not be responsible for the accuracy or completeness of digital images of this map.

HENRY COWELL REDWOODS STATE PARK

SECTION 27 T. 11S, R. 2W, M.D.B & M

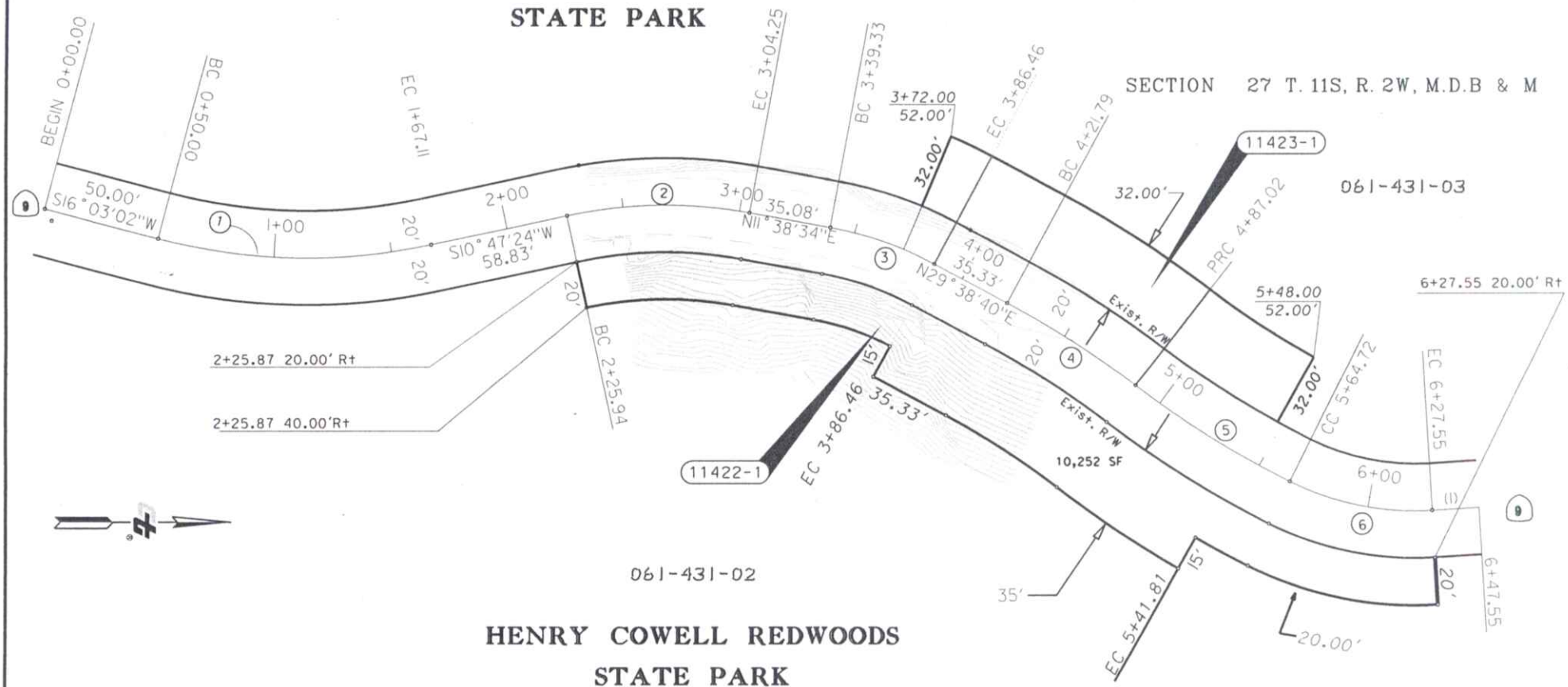

061-431-02

HENRY COWELL REDWOODS STATE PARK

SECTION 27, T. 11S, R. 2W, M.D.B & M

LINE TABLE

NO.	BEARING	DISTANCE
1	N 2°08'26" E	20.00'

CURVE DATA

No.	R	Δ	L
1	250.00'	26°50'26"	117.11'
2	200.00'	22°25'58"	78.31'
3	150.00'	18°00'06"	47.13'
4	400.00'	9°20'40"	65.24'
5	400.00'	11°07'46"	77.70'
6	120.00'	30°00'00"	62.83'

EXHIBIT B

STATE OF CALIFORNIA
BUSINESS, TRANSPORTATION AND HOUSING AGENCY
DEPARTMENT OF TRANSPORTATION

RIGHT OF WAY TRANSFER OF JURISDICTION

EXHIBIT B

PARCEL 11422-1 & 11423-1

NOT TO SCALE

DISTRICT	COUNTY	ROUTE	EA	SHEET NO.	TOTAL SHEETS
05	SCR	9	00590	2	2

CATEGORICAL EXEMPTION/ CATEGORICAL EXCLUSION DETERMINATION FORM

05-SCr-9	1.92/22.98	0Q590	0500000317
Dist.-Co.-Rte. (or Local Agency)	P.M/P.M.	E.A. (State project)	

PROJECT DESCRIPTION:

Caltrans proposes a Storm Water /Source Control project with specific remediation measures at four locations along Route 9 in Santa Cruz County between PMs 1.92/22.98. The intent of this potential project is to reduce the flow of sediment into the San Lorenzo River.

CEQA COMPLIANCE *(for State Projects only)*

Based on an examination of this proposal, supporting information, and the following statements (See 14 CCR 15300 et seq.):

- If this project falls within exempt class 3, 4, 5, 6 or 11, it does not impact an environmental resource of hazardous or critical concern where designated, precisely mapped and officially adopted pursuant to law.
- There will not be a significant cumulative effect by this project and successive projects of the same type in the same place, over time.
- There is not a reasonable possibility that the project will have a significant effect on the environment due to unusual circumstances.
- This project does not damage a scenic resource within an officially designated state scenic highway.
- This project is not located on a site included on any list compiled pursuant to Govt. Code § 65962.5 ("Cortese List").
- This project does not cause a substantial adverse change in the significance of a historical resource.

CALTRANS CEQA DETERMINATION (Check one)

☐ **Exempt by Statute.** (PRC 21080[b]; 14 CCR 15260 et seq.)

Based on an examination of this proposal, supporting information, and the above statements, the project is:

☒ **Categorically Exempt. Class 1.** (PRC 21084; 14 CCR 15300 et seq.)

☐ **Categorically Exempt. General Rule exemption.** [This project does not fall within an exempt class, but it can be seen with certainty that there is no possibility that the activity may have a significant effect on the environment (CCR 15061[b][3])

Matt Fowler	10/23/13	Doug Hessing	10/23/13
Print Name: Environmental Branch Chief		Print Name: Project Manager/DLA Engineer	
Signature	Date	Signature	Date

NEPA COMPLIANCE

In accordance with 23 CFR 771.117, and based on an examination of this proposal and supporting information, the State has determined that this project:

- does not individually or cumulatively have a significant impact on the environment as defined by NEPA and is excluded from the requirements to prepare an Environmental Assessment (EA) or Environmental Impact Statement (EIS), and
- has considered unusual circumstances pursuant to 23 CFR 771.117(b) (http://www.fhwa.dot.gov/hep/23cfr771.htm - sec.771.117).

In non-attainment or maintenance areas for Federal air quality standards, the project is either exempt from all conformity requirements, or conformity analysis has been completed pursuant to 42 USC 7506(c) and 40 CFR 93.

CALTRANS NEPA DETERMINATION (Check one)

☒ **Section 6004:** The State has been assigned, and hereby certifies that it has carried out, the responsibility to make this determination pursuant to Chapter 3 of Title 23, United States Code, Section 326 and a Memorandum of Understanding (MOU) dated June 7, 2010, executed between the FHWA and the State. The State has determined that the project is a Categorical Exclusion under:

- ☐ **23 CFR 771.117(c): activity (c)(___)**
- ☐ **23 CFR 771.117(d): activity (d)(___)**
- X **Activity _1__ listed in the MOU between FHWA and the State**

☐ **Section 6005:** Based on an examination of this proposal and supporting information, the State has determined that the project is a CE under Section 6005 of 23 U.S.C. 327.

Matt Fowler	10/23/13	Doug Hessing	10/23/13
Print Name: Environmental Branch Chief		Print Name: Project Manager/DLA Engineer	
Signature	Date	Signature	Date

Briefly list environmental commitments on continuation sheet. Reference additional information, as appropriate (e.g., air quality studies, documentation of conformity exemption, FHWA conformity determination if Section 6005 project; §106 commitments; §4(f); §7 results; Wetlands Finding; Floodplain Finding; additional studies; and design conditions).

EXHIBIT C

CATEGORICAL EXEMPTION/CATEGORICAL EXCLUSION DETERMINATION FORM
Continuation Sheet

05-SCr-9	1.92/22.98	0Q590	0500000317
Dist.-Co.-Rte. (or Local Agency)	P.M/P.M.	E.A. (State project)	

Location 1 (PM 3.76) – The existing storm damaged fill slope along the east side of (SR) route 9 would be stabilized by constructing a soldier pile and tie back retaining wall.
Location 2 (PM 10.72) – The existing storm damaged Corrugated Metal Pipe (CMP) which extends under the route from the west to the east side of the route (through a concrete crib retaining wall on the east side) and continues along the top of the fill slope down towards the San Lorenzo River would be replaced entirely with High Density Polyethylene (HDPE) Fusion Weld pipe (24" diameter). The outlet end of the HDPE pipe (including a Flared End Section with Rock Slope Protection) would be placed above the ordinary high water mark of the river
Location 3 (PM 12.22) – The existing storm damaged CMP which extends under the route from the west to the east side and outlets on the east side will be replaced. The outlet end of the HDPE pipe (including a Flared End Section with Rock Slope Protection) would be placed above the ordinary high water mark of the river. The existing drainage inlet on the west side of the route would be replaced with a new inlet and a second inlet would be placed on the east side of the route. A drainage cleanout will be placed on the east side of San Lorenzo Avenue at the angle point of the HDPE pipe.
Location 4 (PM 18.71) – The existing storm damaged maintenance turnaround on the west side of the route would be paved to prevent further erosion and would include two drainage inlets. The existing K-Rail would be removed and be replaced with an earthen berm around the outside of the turnaround. The existing plastic drainage pipe (24" diameter), which extends under the route from the east to the west side and the existing drainage inlet on the east side would remain in place; however, HDPE Fusion Weld pipe (24" diameter) would be connected to the end of the existing pipe and extend into the drainage ditch (above the ground and around the existing trees) next to the turnaround. The outlet end of the HDPE pipe (including a Flared End Section with Rock Slope Protection) would be placed above the ordinary high water mark of the San Lorenzo River. In addition, a drainage inlet would be placed at the juncture of the existing and HDPE pipe.

The following measures shall serve to avoid or minimize potential impacts to marbled murrelet, marbled murrelet critical habitat, migratory birds and biological resources in vicinity of the proposed project:

1. Pre-construction surveys for migratory birds shall be conducted at Location 1 by a Caltrans Biologist 10 days prior to the tree removals, unless the trees are removed outside of the migratory bird nesting season and the marbled murrelet nesting season (February 1 – September 15).

2. Prior to tree removals, the two large trees in the BSA at Location 1, an 84-inch DBH coast redwood (PM 3.76) and an 48-inch DBH Douglas fir (PM 3.78) shall be fitted with a wrap of wooden planks around the trunks that will protect the trees from damage by heavy equipment and then wrapped with ESA fencing and marked with flagging or tags that state "DO NOT CUT".

3. A Caltrans Biologist shall monitor the tree removals at Location 1 to ensure the correct trees are removed and monitor the construction site on a monthly basis to ensure avoidance and minimization efforts are being followed.

4. Work conducted during the marbled murrelet nesting season (March 15 – September 15) at Location 1 shall not begin until two hours after sunrise, and shall end two hours before sunset each day, according to The U.S. Naval Observatory as the official source, to avoid the time period when marbled murrelets would be most likely to travel through the BSA.

5. Construction crews working at Location 1 shall be given training by a Caltrans Biologist to visually recognize a marbled murrelet in breeding plumage, and be familiar with marbled murrelet vocalizations.

6. If at any time during construction, marbled murrelet occupancy is detected by the work crews or the Caltrans Biologist, and/or disturbance may affect individual murrelets, then work must cease and consultation would need to be reinitiated with the USFWS.

7. All trash and construction-related debris shall be properly contained and regularly removed from the project site to avoid opportunistic predators of marbled murrelets (e.g., ravens, jays). Following construction, all trash and construction debris shall be removed from work areas.

8. When not in use, motorized equipment shall be shut down.

9. Upon detection of a live, dead or injured marbled murrelet, all construction activities shall stop and initial notification must be made by telephone and writing to the Ventura Fish and Wildlife Office, 2493 Portola Road, Suite B, Ventura, California 93003, (805) 644-1766, within three working days of its finding.

10. Tree removals in the BSA at Location 1 shall be replaced at a ratio of 2:1, and irrigated in the dry season for 1 year upon completion of construction activity. All disturbed ground shall be re-vegetated with native plants. Seed mixes and mulches used on the project will be from source materials that will not introduce exotic species.

11. Additional environmental review may be required for staging areas if they are not located on previously disturbed ground.

12. The BSA is defined as the areas that may be directly, indirectly, temporarily, or permanently impacted by construction and construction-related activities. For the purpose of this project, the BSA is the largest total areas where impacts may happen to natural communities/habitats within the project, and includes potential disturbance areas for both permanent (the retaining wall) and temporary impacts. Caltrans determined the proposed cut/fill limits (the area of potential effects) where excavation and or heavy equipment could have a disturbance effect on the ground and vegetation. A 20-ft buffer was placed around all of the cut/fill limits and will be represented on the project plans.

FOUNDATION REVIEW

DIVISION OF ENGINEERING SERVICES
GEOTECHNICAL SERVICES

To: **Structure Design**
1. Design
2. R.E. Pending File
3. Specifications & Estimates
4. File

Geotechnical Services
1. GD - North ; South ; West
2 GS File Room

Date: 6/17/13

Sidehill Viaduct : Ret Wall
Structure Name

05 - SCr - 009 - 3.76
District County Route ~~km~~ Post
mi.

05000317

District Project Development
District Project Engineer

05-0Q5901 36-0117
E.A. Number Structure Number

Foundation Report By: R. Turner Dated: 3/11/13

Reviewed By: M. Bergman (SD) R. Price (GS)

General Plan Dated: 3/12/13 Foundation Plan Dated: 3/19/13

[X] No changes. [ ] The following changes are necessary.

FOUNDATION CHECKLIST

Pile Types and Design Loads
___ Pile Lengths
___ Predrilling
___ Pile Load Test
___ Substitution of H Piles For Concrete Piles [ ] Yes [ ] No

___ Footing Elevations, Design Loads, and Locations
___ Seismic Data
___ Location of Adjacent Structures and Utilities
___ Stability of Cuts or Fills
___ Fill Time Delay

___ Effect of Fills on Abutments and Bents
___ Fill Surcharge
___ Approach Paving Slabs
___ Scour
___ Ground Water
___ Tremie Seals/Type D Excavation

Structure Design Bridge Design Branch No.

Geotechnical Services

Rev. 06/02

M e m o r a n d u m

Flex your power!
Be energy efficient!

To: MR JOEY AQUINO
Senior Project Engineer, Branch 3
DIVISION OF ENGINEERING SERVICES
STRUCTURE DESIGN

Attn: Michael Bergman

Date: March 11, 2013
File: 05-SCr-009-PM3.7/18.7
Stormwater Mitigation
EFIS 050000317
EA 05-0Q5901

From: **DEPARTMENT OF TRANSPORTATION**
DIVISION OF ENGINEERING SERVICES
GEOTECHNICAL SERVICES

Subject: Final Foundation Report

Scope of Work

A Foundation Report (FR) is provided for the above referenced project. The project is located on Highway 9 in Santa Cruz County, between Santa Cruz and Felton. Construction of a retaining wall and viaduct near post mile 3.8 is proposed to support the outside shoulder of the northbound lane and prevent sediment transport to the San Lorenzo River below the highway. Review of published geologic data and previous geotechnical reports, field reconnaissance, geotechnical instrumentation, and foundation calculations were performed as part of the geotechnical investigation.

The purpose of this report is to document geotechnical conditions and provide foundation recommendations. This report supercedes the Revised Preliminary Foundation Report dated April 10, 2012 and the Foundation Report dated March 6, 2013.

Project Description

The existing roadway on this rural section of Highway 9 consists of two 11-foot wide lanes with narrow shoulders. The outside edge of pavement on the northbound lane is backed by an unpaved shoulder approximately 2-5 feet wide. Steep, tree-lined slopes adjacent to the unpaved shoulder stand above the railroad and the San Lorenzo River far below the highway. The edge of pavement on the southbound lane abuts the toe of the cut slope above the road. Cut slopes above the road are approximately 1:1 with some localized cuts adjacent to the highway as steep as ½:1, while slopes below the road vary from approximately ¾:1 to 1:1. Redwood trees line the tight curves and limit sight distance on this windy section of highway. Existing concrete barriers on top of retaining walls are located at either end of the project limits.

The project proposes to construct an anchored soldier pile wall from “LOL” Station 201+59.41 to 202+95.41, for an approximate length of 136 feet. The maximum lagged height of the wall will be 30 feet with 3 rows of ground anchors. Single-column bent supported reinforced concrete slab viaducts are proposed from “LOL1” Station 200+17.41 to 201+59.41 and Station 202+95.41 to 203+97.41. Refer to the attached General Plan provided by Structure Design.

Pertinent Reports and Investigations

The following publications were used to assist in the assessment of site conditions:

1. *District Preliminary Geotechnical Report.* Dellamas, Zeke. EA 05-0Q5900. June 8, 2009.

2. *Revised Preliminary Foundation Report.* Turner, Ryan. EA 05-0Q5901. April 10, 2012.

Field and Site Investigation

Geotechnical personnel performed site reconnaissance and a subsurface investigation to monitor the stability of the slopes and determine foundation conditions within the project limits. Global stability of the slope below the northbound lane was evaluated by looking for signs of slope instability, such as pavement and soil cracking, or freshly displaced soil indicative of scarps. Longitudinal cracking was observed in the northbound lane from approximately "LOC1" Station 103+50 to 104+80. A slope inclinometer was installed within the area of pavement distress, but has not shown signs of movement at the time of this report. Continued reading of the instrument is planned and any new information will be conveyed to the design team as it is collected. Cut slopes above the highway appear stable.

Review of historic job files encountered records of an emergency cut slope repair above the highway within the project limits completed in 2005. The slope was re-graded to remove a shallow mobilized mass that was saturated during winter storms. The repaired slope is well-vegetated and appears to be performing well, with no observed evidence of global instability.

Three mud rotary borings were advanced within the project limits to determine the subsurface conditions to be used for foundation design. In-situ soil strength parameters were determined using the Standard Penetration Test (SPT) for cohesionless soils. Laboratory tests were used to determine the particle size distribution and corrosion potential of representative samples obtained at depth. Refer to Table 1 for a summary of subsurface investigation information.

Table 1. Subsurface Exploration Summary

Boring	*Completion Date*	*Equipment*	*Hammer Type*	*Hammer Efficiency (%)*	*Approximate Ground Elevation (ft)*	*Depth (ft)*
RC-12-001	1-31-2012	CME75	Auto	79	470.8	45.25
RC-12-002	2-1-2012	CME75	Auto	79	473.1	35.30
RC-12-003	2-8-2012	B47	Manual	57	468.8	50.50

Site Geology and Subsurface Conditions

Physical Setting

The project is located in the Santa Cruz Mountains in the Coast Range Geomorphic Province. The Santa Cruz Mountains are a northwest trending mountain range separating the Santa Clara

Valley from the Pacific Ocean. Terrain is characterized by steep-sided mountains and incised drainages tributary to larger rivers and streams. Highway 9 follows the western bank of the San Lorenzo River as it flows through the Henry Cowell Redwoods State Park toward its confluence with the Pacific Ocean in Santa Cruz.

The regional climate is generally mild with strong coastal influence. Average temperatures and rainfall amounts are regionally variable, depending on the terrain and elevation. On the lower segment of Route 9, which experiences weather similar to the City of Santa Cruz, average maximum and minimum temperatures are 68.0 and 45.0 degrees Fahrenheit. In higher terrain, near Boulder Creek, the average maximum and minimum temperatures are 73.7 and 42.7 degrees Fahrenheit. Little or no precipitation commonly falls during the summer months, while moderate to heavy precipitation in the form of rainfall occurs in the winter. Average annual rainfall in Santa Cruz is approximately 30.0 inches, with a record rainfall of 59.8 inches. Average annual rainfall in Boulder Creek is approximately 50.0 inches, with a record rainfall of 114.0 inches.

Regional Geology

Uplift of the Santa Cruz Mountains along folds and faults has exposed marine sandstone, mudstone, shale, and intrusive and extrusive volcanic rocks. Rocks exposed to the west of the San Andreas Fault are primarily Tertiary sedimentary and volcanic formations deposited in marine basins underlain by older Salinian metamorphic and granitic bedrock. The Santa Cruz Mountains are divided by major strike-slip faults into a series of blocks of varying stratigraphic sequences. Refer to Attachment 2, Geologic Map and Legend of Santa Cruz County, California, compiled by Earl E. Brabb, 1997, for the mapped geology of the region.

Within the project limits, the predominantly mapped geologic unit is quartz diorite (identified in the field as granodiorite), an intrusive, crystalline, igneous rock. The granodiorite weathers from a granular sandy soil to a fine-grained clayey soil, as can be observed in the fill slopes constructed with material excavated from uphill cut slopes. Exposures of the intact rock in the 2005 cut slope repair are visible, and appear globally stable at slope angles of 1:1 and steeper.

Geotechnical Site Conditions

Borings drilled in the northbound lane within the project limits encountered granular soils of weathered parent rock overlying slightly weathered to decomposed igneous rock (granodiorite). The depth from the roadway to the contact between the soil and intact rock encountered in the borings varied throughout the site, from approximately 2 feet at the southern end of the project limits, to approximately 20 feet in the location of landsliding.

Groundwater

Groundwater was not encountered in an open standpipe monitoring well installed during the subsurface investigation from the roadway elevation to a depth of approximately 35.3 feet. Groundwater elevations will continue to be read periodically to determine if groundwater will influence design and construction of the proposed structure.

Table 2. Groundwater Elevations

Boring	Date	Depth to Groundwater (ft)	Groundwater Elevation(ft)
RC-10-002	3-6-2012	Dry	Unknown
RC-10-002	4-5-2012	Dry	Unknown
RC-10-002	6-28-2012	Dry	Unknown
RC-10-002	2-14-2013	Dry	Unknown

Corrosion Evaluation

The department considers a site to be potentially corrosive to the foundation elements if the following conditions exist for the representative soil and/or water samples taken at the site: minimum resistivity of 1000 ohm-cm or less and/or PH of 5.5 or less.

Bulk soil samples were obtained during the subsurface investigation and tested for corrosion potential at the District Materials Laboratory. The results of the corrosion testing are presented in Table 3. Based on the results, soils are not considered corrosive to foundation elements.

Table 3. Corrosion Testing Summary

Boring	*Depth (ft)*	*pH*	*Resistivity ohm-cm*	*Chloride ppm*	*Sulphate ppm*	*Corrosive*
RC-10-002	1.0-3.0	8.2	3150	-	-	NO
RC-10-002	23.0-25.0	8.2	5620	-	-	NO
RC-10-003	1.0-4.0	8.0	4410	-	-	NO

Seismic Recommendations

Based on the *Caltrans Seismic Design Procedure*, the following active and potentially active faults are located within the vicinity of the project site. The Caltrans ARS Online Tool was used to develop preliminary acceleration response spectrum curves for deterministic and probabilistic seismic prediction models. An estimated average shear wave velocity of 1772 ft/sec (540 m/s) for the upper 100 feet was estimated to develop the curve. The ARS curve is presented in figure 1. A basin factor of 1.0 was assumed for this location and the Caltrans ARS Online Tool applied a near fault factor to the data. Faults with potential to influence the project site are presented in Table 4. Tabular values are provided in attachment 7.

Table 4. Active and Potentially Active Faults

Fault Name	*Fault Type*	*Moment magnitude of maximum credible earthquake*	*Peak ground acceleration T=0 sec (gravity)*
Monterey Bay-Tularcitos	RLSS	7.3	0.26
San Andreas Fault Zone	RLSS	7.9	0.27

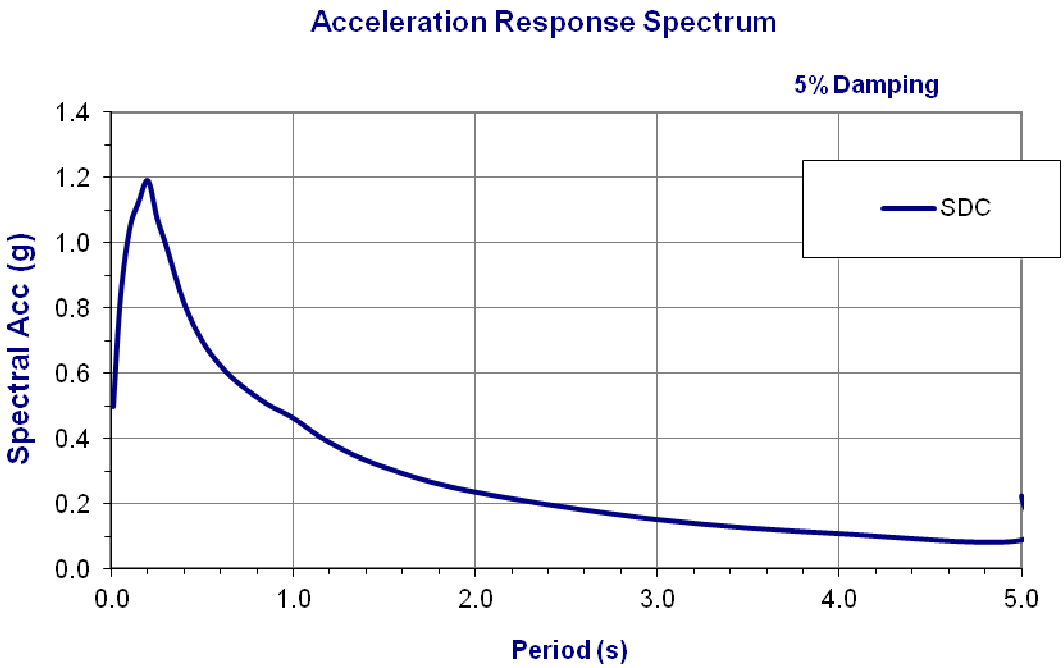

Figure 1. Preliminary ARS Curve

Liquefaction is the partial or complete loss of soil strength due to the build-up of excess pore water pressure during a seismic event. Liquefaction potential in the project area is considered low due to the presence of shallow rock.

Slope Stability Analysis

Slope stability analysis of the existing slope was performed using the limit equilibrium slope stability modeling program SLOPE/W to determine in-situ soil parameters for design of the retaining wall. Soil unit weight, friction angle, and cohesion of the soil overlying rock were varied to back-calculate a factor of safety of approximately 1.0 for a circular sliding surface. The failure surface was modeled beginning at the observed pavement cracking, passing through a point tangent to the observed top of rock contact, and toeing out in the soil slope below the highway. For design purposes, an assumed thickness of 30 feet of soil overlying rock should be used. Failure planes were confined to the soil and not allowed to pass through the rock. Cohesion was assumed to be zero, because evidence indicates that movement along the slide plane has occurred. Values of residual cohesion along mobilized slide planes are difficult to predict without extensive laboratory testing and can lead to unconservative analysis results if over-predicted. The following soil parameters were determined from the analysis:

SOIL $\Phi' = 32^\circ$ $c' = 0$ psf Total Unit Weight = 125 pcf

ROCK $\Phi' = 38^\circ$ $c' = 0$ psf Total Unit Weight = 140 pcf

A slope stability model of the retaining wall and slope was then modeled using the same soil parameters to determine the required resisting force provided by the ground anchors to achieve a global slope stability factor of safety of 1.3 or greater. Per BDS 5.5.5.7.1, the required horizontal resisting force provided by the retaining wall (P_{TOTAL}) shall be the greater of 1.44 times the resultant of the active earth pressure, calculated using Coulomb's theory with the soil parameters listed above and ignoring wall friction (δ), or the horizontal component of force required to resist landslide forces and provide a global slope stability factor of safety of 1.3, as determined in the slope stability analysis. A traffic surcharge of 240 pounds per square foot on the travelled way was considered for both cases. A design lagged wall height of 30 feet was assumed for the analysis. Analysis results are listed in Table 5.

Table 5: Wall Loading

Force Determination Analysis Method	P_{TOTAL} *(kips/ft)*
Coulomb Active Earth Pressure Resultant x 1.44	28.3
Limit Equilibrium Slope Stability (SLOPE/W) FS=1.3	31.6

Slope stability of the wall was also evaluated considering seismic loading by applying a horizontal force to the wall equal to the weight of the retained soil multiplied by one-third of the peak ground acceleration. The pseudo-static factor of safety was approximately equal to 1.1, indicating adequate stability during the design seismic event.

Foundation Recommendations

Anchored Solider Pile Wall

Stabilization of the landsliding is proposed by constructing an anchored soldier pile wall. A design lagged height of 30 feet is recommended. Pile sections will consist of side-by-side wide flange steel sections centered in a 36" diameter drilled hole. Ground anchors will be installed through the space between the flanges of the adjacent steel pile sections at an inclination of 20 degrees from horizontal. Three rows of ground anchors are recommended, with a maximum vertical anchor spacing of 9 feet and horizontal pile spacing of 8 feet. Recommended ground anchor unbonded lengths are presented in Table 6. Unbonded lengths were calculated to extend a minimum of 10 feet past the estimated bedrock surface underlying the residual soils in the area of landsliding, to ensure construction of the bonded zone in competent material.

Table 6: Ground Anchor Recommendations

Ground Anchor Row	*Unbonded Length (ft)*
1	35
2	30
3	25

An 8-foot or wider bench sloped away from the wall as detailed in the plans is recommended in front of the wall. Slope the ends of the bench up to at a maximum slope of 1.5:1 (H:V). A chimney drain in front of the wall to allow for water moving through the buried portion of the lagging to drain freely is recommended. Fully encapsulate a two-foot wide layer of Class III permeable material in geosynthetic filter fabric with an 8" diameter slotted pipe 6" above the

base of the permeable material. Outlet the slotted collector pipe with a solid pipe section sloped to drain through the bench and outlet through the slope below the wall.

Pile axial loads were resolved from the vertical component of the ground anchor forces and the axial load applied at the pile head by the slab at each pile. Piles are assumed to obtain their axial resistance in side resistance only. Pile lengths below the bottom of lagging required to resist axial loads are presented in Table 7. Pile tip elevations are provided in the Pile & Tieback Data Table in the project plans. Due to the potential for movement of the bench, consideration of the development of passive pile resistance is recommended to begin at 5 feet below the bottom of lagging elevation. Negligible pile settlements are anticipated.

Table 7: Solider Pile Recommendations

Pile Type	Service-I Limit State Factored Load (kips)	Strength-I Limit State Factored Load (kips)	Extreme Limit State Factored Load (kips)	Controlling Required Nominal Axial Compression Resistance: Strength Limit State-I φ=0.55 (kips)	Recommended Pile Length Below Lagging
36" Drilled Hole	175	187	83	340	15.0 feet

Viaduct

Widening and support of the highway is proposed by construction of viaducts on the northbound side of the highway on either end of the anchored soldier pile retaining wall. Single column viaduct bents supported on permanently cased 36" diameter cast-in-drilled-hole (CIDH) foundations with 24" diameter rock sockets below the casing are proposed. Permanent casing will serve to prevent caving in the soils and weathered rock near the surface and act as the column form where the viaduct column extends above the ground. A cast-in-place cutoff wall and slope paving behind the columns will prevent erosion of material from beneath the structure. Installation of a geocomposite drain on the rear side of the cutoff wall is recommended to prevent build-up of hydrostatic pressures. Refer to attached General Plan for typical details. Viaduct pile axial loads were provided by Structure Design. Piles are assumed to derive axial resistance from side resistance in the rock-socketed portions. Negligible pile settlements of less than 1 inch are anticipated. Pile design recommendations are summarized in the following tables.

Foundation Design Recommendations

Support Location	Pile Type	Service-I Limit State Factored Load per Support(kips)	Strength –I Limit State Factored Load per Support(kips)	Extreme Limit State Factored Load per Support(kips)	Required Nominal Axial Resistance (kips)				24" Rock Socket Design Tip Elevations (ft)	24" Rock Socket Specified Tip Elevation (ft)	36" Permanent Casing Specified Tip Elevation (ft)
					Strength Limit		Extreme Event				
					Comp. φ=0.55	Tension φ=0.40	Comp. φ=1.0	Tension φ=1.0			
Bent 1	36" CIDH w/ 24" Rock Socket	129	210	30	382	N/A	30	N/A	441.50 (a-I) 454.50 (a-II), 441.50 (c) 433.50 (d)	433.50	459.50
Bent 2	36" CIDH w/ 24" Rock Socket	231	359	116	653	N/A	116	N/A	433.78 (a-I) 450.78 (a-II), 433.78 (c) 433.78 (d)	433.78	459.78
Bent 3	36" CIDH w/ 24" Rock Socket	213	332	95	604	N/A	95	N/A	434.87 (a-I) 452.87 (a-II), 434.87 (c) 433.87 (d)	433.87	459.87
Bent 4	36" CIDH w/ 24" Rock Socket	230	357	94	649	N/A	94	N/A	433.91 (a-I) 452.91 (a-II), 433.91 (c) 433.91 (d)	433.91	459.91
Bent 5	36" CIDH w/ 24" Rock Socket	129	210	80	382	N/A	80	N/A	441.45 (a-I) 453.45 (a-II), 441.45 (c) 433.45 (d)	433.45	459.45
Bent 6	36" CIDH w/ 24" Rock Socket	124	203	39	369	N/A	39	N/A	440.83 (a-I) 452.83(a-II), 440.83 (c) 432.83 (d)	432.83	457.83
Bent 7	36" CIDH w/ 24" Rock Socket	219	341	109	620	N/A	109	N/A	432.07 (a-I) 450.07(a-II), 432.07 (c) 432.07 (d)	432.07	457.07
Bent 8	36" CIDH w/ 24" Rock Socket	219	341	86	620	N/A	86	N/A	431.01 (a-I) 450.01 (a-II), 431.01 (c) 431.01 (d)	431.01	456.01
Bent 9	36" CIDH w/ 24" Rock Socket	124	203	65	369	N/A	65	N/A	437.49 (a-I) 448.49 (a-II), 437.49 (c) 429.49 (d)	429.49	454.49

Notes:

1) *Design tip elevations are controlled by: (a-I) Compression (Strength Limit), (a-II) Compression (Extreme Event), (c) Service Limit State 1" maximum settlement, and (d) lateral.*
2) *The specified tip elevations shall not be raised above the design tip elevations.*

Pile Data Table						
Location	Pile Type	Nominal Resistance (kips)		Design Tip Elevation (ft)	Specified 24" Rock Socket Tip Elevation (ft)	36" Permanent Steel Casing Specified Tip Elevation (ft)
		Compression	Tension			
Bent 1	36" CIDH w/ 24" Rock Socket	382	N/A	441.50 (a-I) 454.50 (a-II), 441.50 (c) 433.50 (d)	433.50	459.50
Bent 2	36" CIDH w/ 24" Rock Socket	653	N/A	433.78 (a-I) 450.78 (a-II), 433.78 (c) 433.78 (d)	433.78	459.78
Bent 3	36" CIDH w/ 24" Rock Socket	604	N/A	434.87 (a-I) 452.87 (a-II), 434.87 (c) 433.87 (d)	433.87	459.87
Bent 4	36" CIDH w/ 24" Rock Socket	649	N/A	433.91 (a-I) 452.91 (a-II), 433.91 (c) 433.91 (d)	433.91	459.91
Bent 5	36" CIDH w/ 24" Rock Socket	382	N/A	441.45 (a-I) 453.45 (a-II), 441.45 (c) 433.45 (d)	433.45	459.45
Bent 6	36" CIDH w/ 24" Rock Socket	369	N/A	440.83 (a-I) 452.83(a-II), 440.83 (c) 432.83 (d)	432.83	457.83
Bent 7	36" CIDH w/ 24" Rock Socket	620	N/A	432.07 (a-I) 450.07(a-II), 432.07 (c) 432.07 (d)	432.07	457.07
Bent 8	36" CIDH w/ 24" Rock Socket	620	N/A	431.01 (a-I) 450.01 (a-II), 431.01 (c) 431.01 (d)	431.01	456.01
Bent 9	36" CIDH w/ 24" Rock Socket	369	N/A	437.49 (a-I) 448.49 (a-II), 437.49 (c) 429.49 (d)	429.49	454.49

Notes:

1) *Design tip elevations for Bents are controlled by: (a-I) Compression (Strength Limit), (a-II) Compression (Extreme Event), (c) Service Limit State 1" maximum settlement, and (d) lateral.*
2) *The specified tip elevations shall not be raised above the design tip elevations.*

Construction Considerations

Construction of the viaduct and retaining wall will likely require full closure of the highway.

Groundwater was not encountered in the open standpipe monitoring well installed on site, but may be encountered in deep foundation excavations for the soldier piles and viaduct. Design and construction methods of the foundations should consider the possibility of encountering

groundwater and provisions to control groundwater in pile excavations shall be proposed by the contractor in the pile installation plan.

Caving of drilled excavations for the anchored soldier pile wall and viaduct supports may occur due to presence of loose granular soils near the surface and steeply dipping fractures in the rock underlying soils. The use of drilling fluids, temporary casings, placement of tremie seals to stabilize fractured material and allow re-drilling, or other methods may be required to maintain excavation stability and/or prevent an inward hydraulic pressure gradient if groundwater is encountered. Drill records for the anchored soldier pile wall constructed at post mile 3.9 (EA 05-452504) indicate that caving occurred in a portion of the 24" diameter drilled soldier pile excavations. Slurry cement backfill and re-drilling was successfully used to advance excavations through caving zones in the same geologic unit (granodiorite). See the attached construction records.

Construction of a working bench in front of the wall may be difficult due to the steep slopes and narrow roadway width. Excavation of the northbound lane may be required to gain access to the slopes in front of the proposed retaining wall layout line, resulting in backfilling behind the soldier piles and lagging. Care shall be taken to ensure proper compaction of the retaining wall backfill prior to stressing of ground anchors to prevent deflection of the solider piles into the backfill. Per Standard Specification Section 19-3.03E(3), a minimum backfill height of 5 feet behind lagging shall be provided prior to drilling and installation of the ground anchors.

Standard Specification 2-1.06B "Supplemental Project Information", discloses to bidders and contractors a list of pertinent information available for their inspection prior to bid opening. Items listed to be included in the Information Handout will be provided in Acrobat (.pdf) format to the Addressee of this report via electronic mail.

Data and information attached with the project plans are:

A. Log of Test Borings.

Data and information included in the Information Handout provided to the Bidders and Contractors are:

A. Foundation Report for the Retaining Wall dated March 11, 2013.

Data and information available for inspection at the District Office:

A. Borehole core samples.

The District Office is located at 50 Higuera Street, San Luis Obispo, California, 93401. Contact Ryan Turner at (805) 549-3750 to arrange inspection of the borehole core samples.

If you have any questions or comments, please contact Ryan Turner at (805) 549-3750 or Mike Finegan at (805) 549-3194.

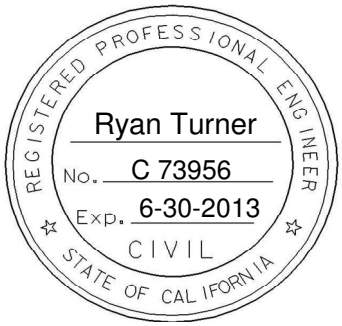

RYAN TURNER, P.E.
Transportation Engineer Civil
Geotechnical Design – North
Branch D

MICHAEL S. FINEGAN, P.E.
Branch Chief
Geotechnical Design – North
Branch D

c: Caroline Reyes/ Design
Doug Hessing/ Project Manager
Andrew Tan / PCE
Douglas Lambert / DME
Structure Construction RE Pending File/ RE_Pending_File@dot.ca.gov

LIST OF ATTACHMENTS

Vicinity Map	Attachment 1
Geologic Map	Attachment 2
Foundation Plan	Attachment 3
General Plan	Attachment 4
Drilling Observations	Attachment 5
Slope Inclinometer Results	Attachment 6
Tabular ARS Data	Attachment 7

VICINITY MAP

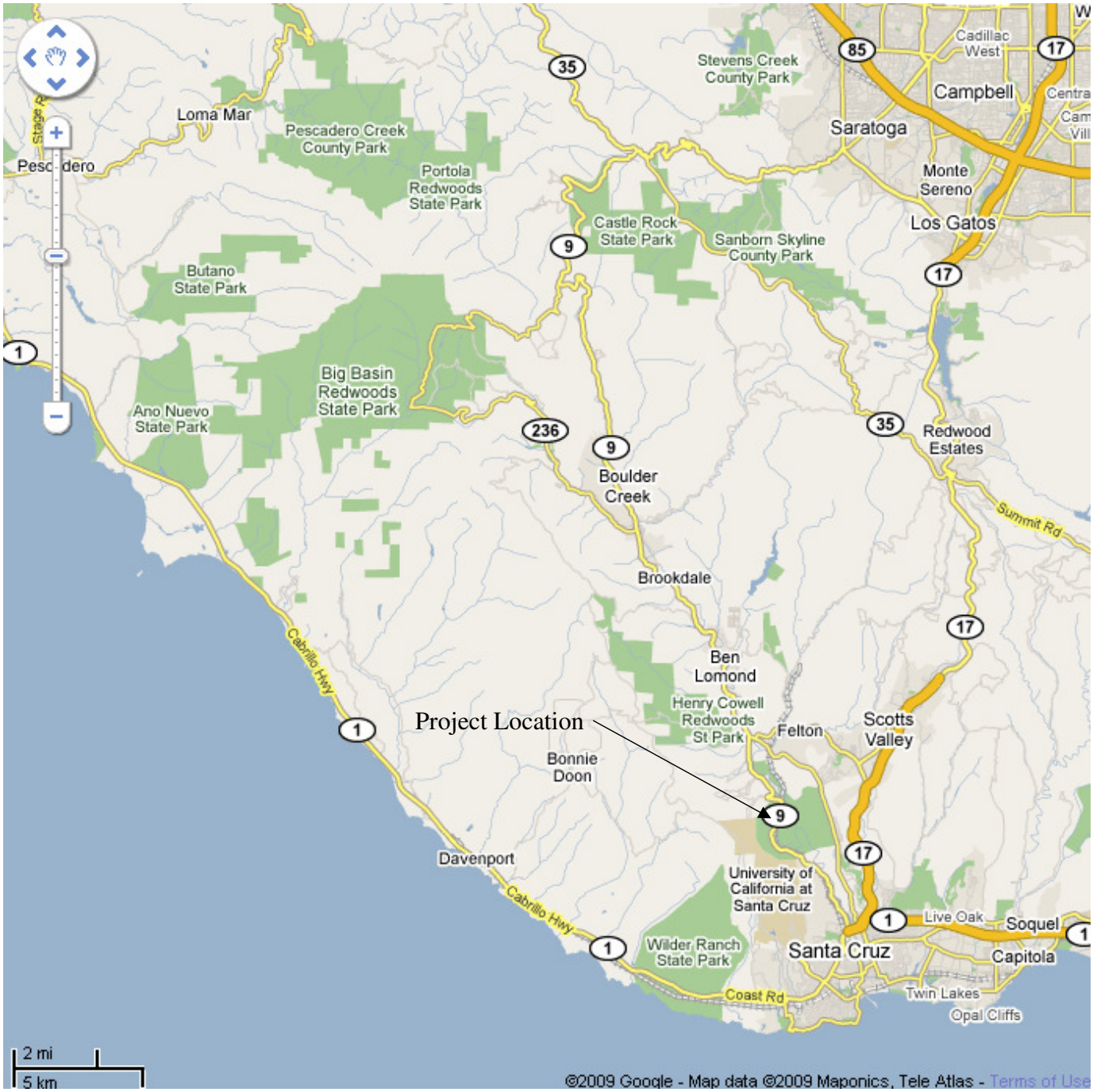

Attachment 1

EA-05-0Q5901

05-SCR-9-3.76

Storm Water Mitigation

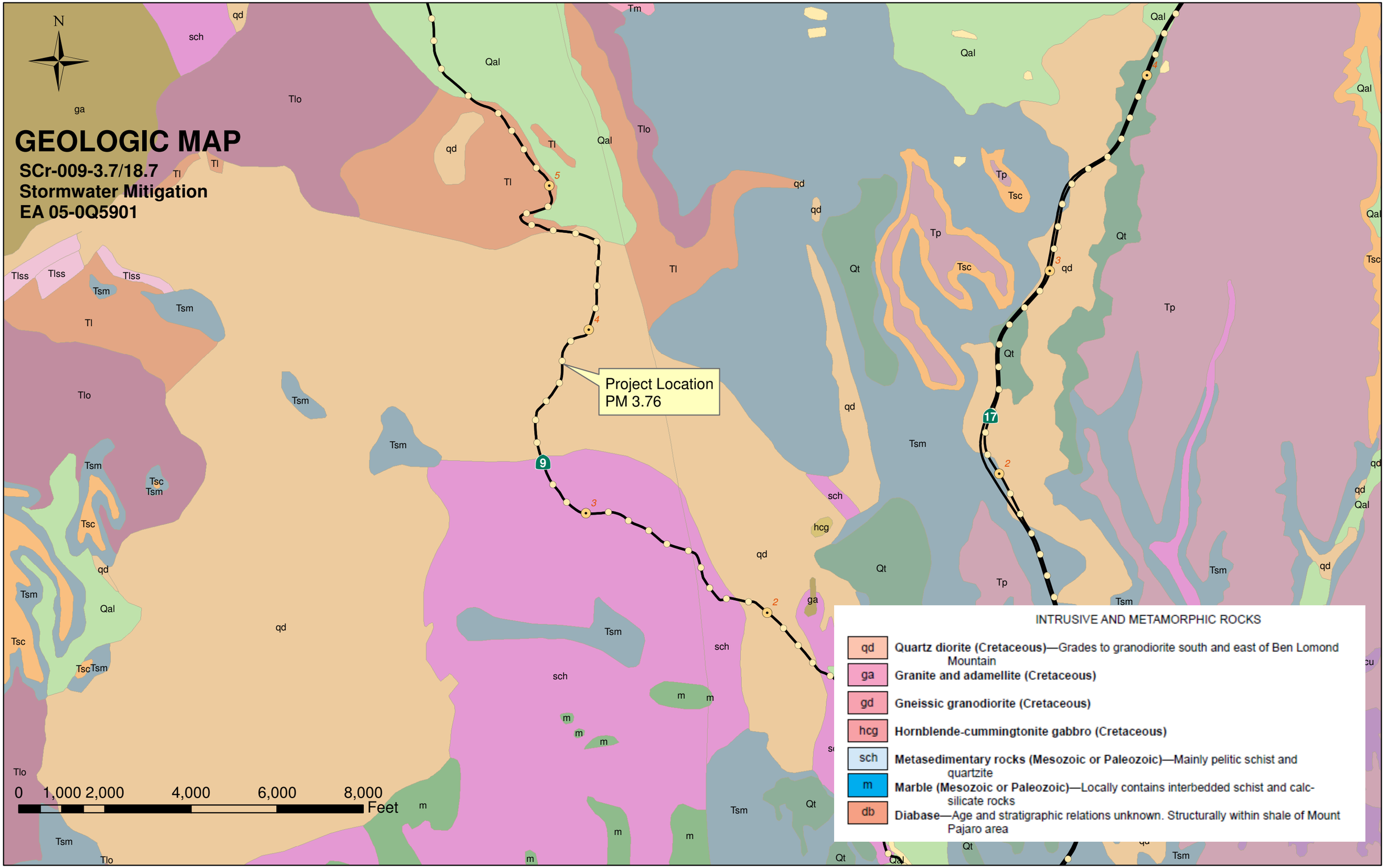

Attachment 2

DIST	COUNTY	ROUTE	POST MILES TOTAL PROJECT	SHEET NO.	TOTAL SHEETS
05	SCr	9			

REGISTERED CIVIL ENGINEER X DATE

PLANS APPROVAL DATE

The State of California or its officers or agents shall not be responsible for the accuracy or completeness of electronic copies of this plan sheet.

REGISTERED PROFESSIONAL ENGINEER CIVIL STATE OF CALIFORNIA

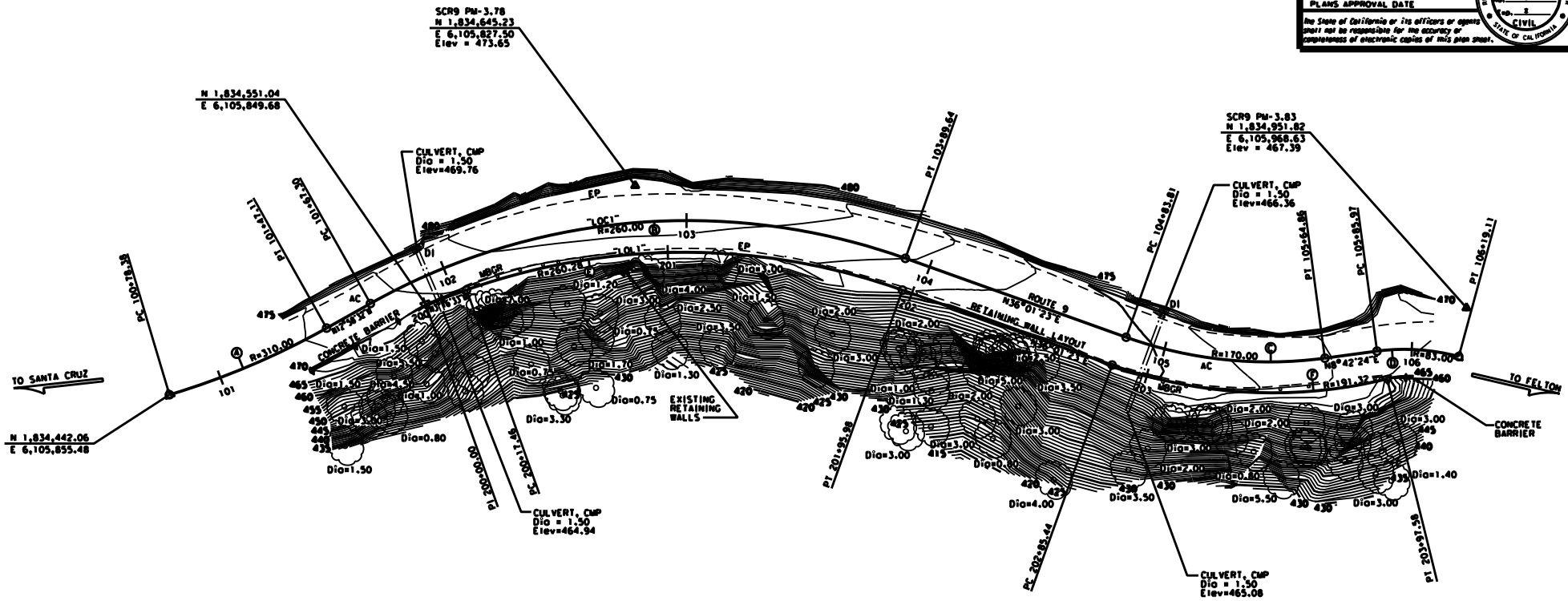

SURVEY CONTROL

SCR9 PM-3.78
Fnd 1"IP w/ CALTRANS CONTROL PP w/NAIL
14.87 FT Lt. ROUTE 9
Sta. 102+80.48
N 1,834,645.23
E 6,105,827.50
Elev. = 473.65

SCR9 PM-3.83
Fnd LEAD AND TACK, FLUSH IN CONCRETE
19.75 FT Lt. ROUTE 9
Sta. 106+17.36
N 1,834,951.82
E 6,105,968.63
Elev. = 467.39

CURVE DATA "LOC1" LINE

No.	R	Δ	T	L
A	310.00	12°42'08"	34.50	68.73
B	260.00	48°59'54"	118.48	222.35
C	170.00	27°18'59"	41.31	81.05
D	83.00	22°52'15"	16.79	33.13

CURVE DATA "LOL1" LINE

No.	R	Δ	T	L
E	260.28	39°17'56"	92.93	178.52
F	191.32	33°35'07"	57.74	112.14

PRELIMINARY INVESTIGATION SECTION

SCALE 1"=20' | VERT.DATUM NAVD88 | HORZ.DATUM NAD83(92)(1991.35) | ALIGNMENT TIES Dist. Traverse Survey | PHOTOGRAMMETRY INV AS OF 3 | SURVEYED BY DISTRICT | DRAWN BY L. ZOLNIKOV 04/2012 | CHECKED D. IVY 04/2012 | CHECKED L. LEE 04/2012

DESIGN BY X CHECKED X
DETAILS BY X CHECKED X
QUANTITIES BY X CHECKED X

STATE OF CALIFORNIA DEPARTMENT OF TRANSPORTATION

DIVISION OF ENGINEERING SERVICES STRUCTURE DESIGN DESIGN BRANCH 3

BRIDGE NO. 36E0039 | POST MILE 3.76

RET WALL/SIDEHILL VIADUCT-LOC1
FOUNDATION PLAN

STRUCTURES FOUNDATION PLAN SHEET (ENGLISH) REV. 09-01-101

ORIGINAL SCALE IN INCHES FOR REDUCED PLANS 0 1 2 3

UNIT: 3646
PROJECT NUMBER & PHASE: 0500000317 1 CONTRACT NO.: X
FILE => BREQUEST

DISPLAYED PRINTS BEARING EARLIER REVISION DATES

REVISION DATES 01/31/12 01/31/13 01/31/14 SHEET X OF X

USERNAME => ROSER DATE PLOTTED => 8/JUNE TIME PLOTTED => 8/TIME

36-retwall-loc1-e-fpl01.dgn 3/4/2013 9:58:06 AM

Attachment 3

DIST	COUNTY	ROUTE	POST MILES TOTAL PROJECT	SHEET No.	TOTAL SHEETS
05	SCr	9			

REGISTERED CIVIL ENGINEER X DATE

PLANS APPROVAL DATE

REGISTERED PROFESSIONAL ENGINEER Michael K Bergman No. 78483 Exp. 9-30-13 CIVIL STATE OF CALIFORNIA

The State of California or its officers or agents shall not be responsible for the accuracy or completeness of electronic copies of this plan sheet.

INCOMPLETE PLAN FOR DESIGN STUDY PRINTED

DATE: 04-MAR-2013

Office of Structure Design
STATE OF CALIFORNIA

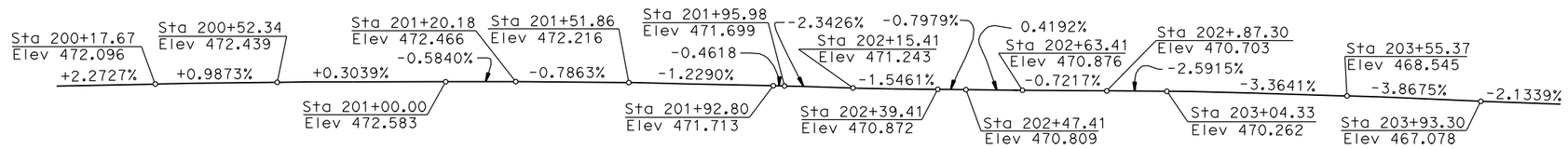

PROFILE GRADE

NO SCALE

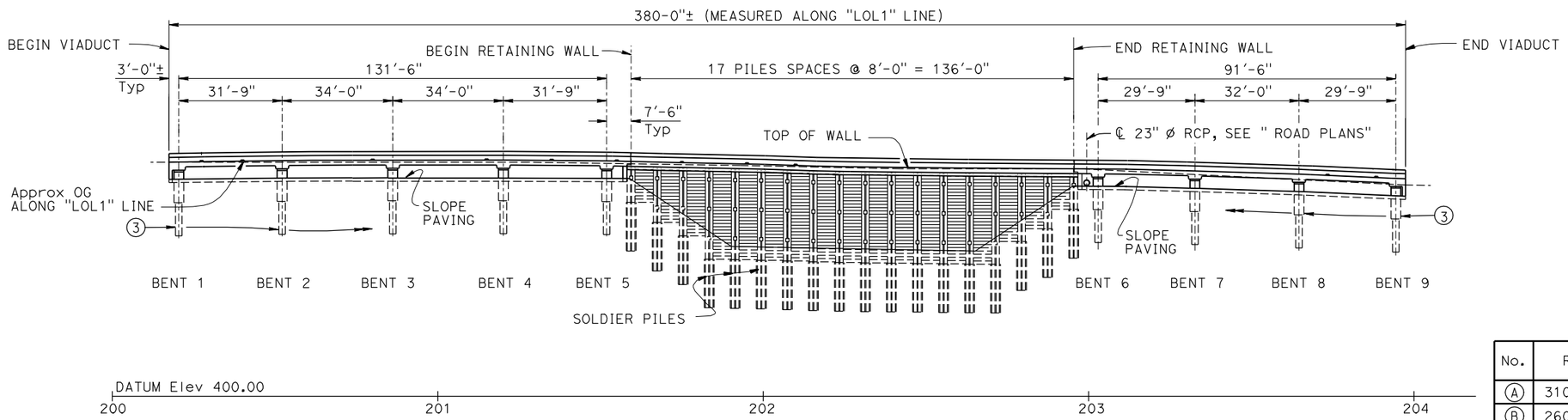

DEVELOPED ELEVATION

1" = 20'

NOTES:

1. Paint "RETAINING WALL @ PM 3.76"
2. Paint "WALL NO. 36E0039"
3. 36" ø CIDH Piles with permanent steel casing and 24" ø CIDH rock socket

CURVE DATA

No.	R	Δ	T	L
A	310.00'	12°42'08"	34.50'	68.73'
B	260.00'	48°59'54"	118.48'	222.35'
C	170.00'	27°18'59"	41.31'	81.05'
D	83.00'	22°52'15"	16.79'	33.13'
E	260.28'	39°17'56"	92.93'	178.52'
F	191.32'	33°35'07"	57.74'	112.14'
G	134.37'	16°24'53"	19.38'	38.50'
H	200.00'	5°00'23"	8.74'	17.48'
I	244.75'	27°41'26"	60.32'	118.29'
J	200.00'	32°56'25"	59.13'	114.98
K	110.00'	3°36'00"	3.46'	6.91'

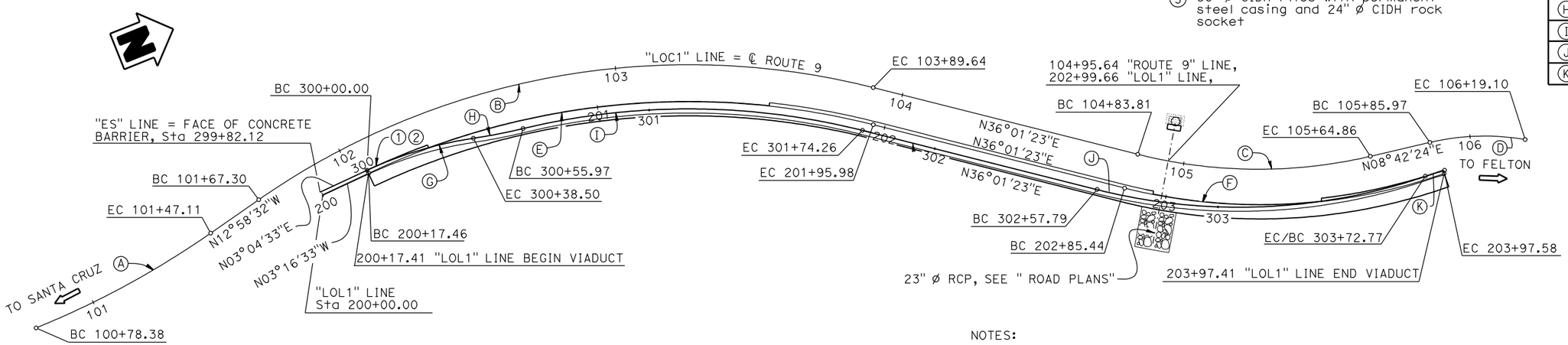

PLAN

1" = 20'

NOTES:

1. For Index to Plan, General Notes, Standard Plans List and Pile data, see "INDEX TO PLAN No.1 & 2" sheets
2. For Typical Section, see GENERAL PLAN NO. 2" sheet

NOTE:
THE CONTRACTOR SHALL VERIFY ALL CONTROLLING FIELD DIMENSIONS BEFORE ORDERING OR FABRICATING ANY MATERIAL.

HIGHWAY 9 STORMWATER MITIGATION

SIDEHILL VIADUCT/RETAINING WALL @ PM 3.76

GENERAL PLAN NO. 1

DESIGN	BY M Bergman/A V Herrera	CHECKED	LOAD & RESISTANCE FACTOR DESIGN	LIVE LOADING: HL93 W/"LOW-BOY"; PERMIT DESIGN VEHICLE
DETAILS	BY S Motalebi/N Gwynn	CHECKED	LAYOUT BY Mike Bergman	CHECKED Art V Herrera
QUANTITIES	BY	CHECKED	SPECIFICATIONS BY X	PLANS AND SPECS COMPARED X

X
DESIGN ENGINEER

ORIGINAL SCALE IN INCHES FOR REDUCED PLANS 0 1 2 3

STATE OF CALIFORNIA
DEPARTMENT OF TRANSPORTATION

DIVISION OF ENGINEERING SERVICES
STRUCTURE DESIGN
DESIGN BRANCH 3

BRIDGE NO. 36E0039
POST MILE 3.76

UNIT: 3578
PROJECT NUMBER & PHASE: 0500000317-1
CONTRACT NO.: 05-005901

DISREGARD PRINTS BEARING EARLIER REVISION DATES

REVISION DATES: 5-22-12, 10-3-12

SHEET 1 OF

STRUCTURES DESIGN GENERAL PLAN SHEET (ENGLISH) (REV.09-01-10)

FILE => 36e0039-a-gp1.dgn

USERNAME => s136540 DATE PLOTTED => 04-MAR-2013 TIME PLOTTED => 13:54

Attachment 4

DIST	COUNTY	ROUTE	POST MILES TOTAL PROJECT	SHEET No.	TOTAL SHEETS
05	SCr	9			

INCOMPLETE PLAN FOR DESIGN STUDY PRINTED
DATE: 04-MAR-2013
Office of Structure Design
STATE OF CALIFORNIA

REGISTERED CIVIL ENGINEER X DATE

PLANS APPROVAL DATE

REGISTERED PROFESSIONAL ENGINEER Michael K Bergman No. 78483 Exp. 9-30-13 CIVIL STATE OF CALIFORNIA

The State of California or its officers or agents shall not be responsible for the accuracy or completeness of electronic copies of this plan sheet.

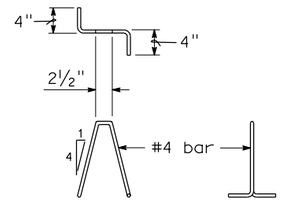

BAR CHAIR DETAIL

NO SCALE

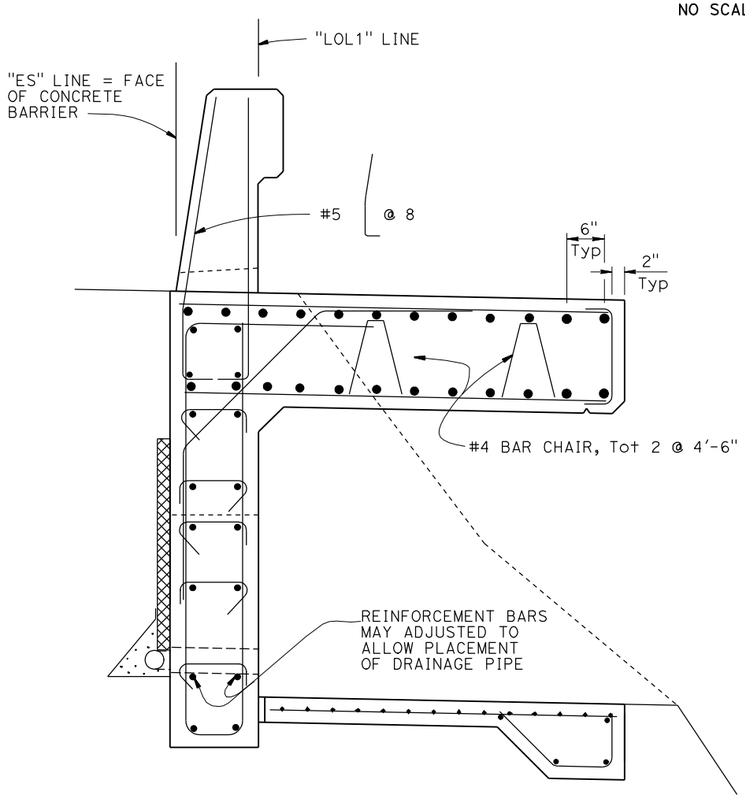

NOTES:
1. For limits of Typical Section without paving notch, see "TOP SLAB REINOFRCEMENT NO. 1" and "TOP SLAB REINFORCEMENT NO. 2" sheets
2. For details not shown, see "TYPICAL SECTION WITH PAVING NOTCH"

TYPICAL SECTION WITHOUT PAVING NOTCH

1" = 1'-0"

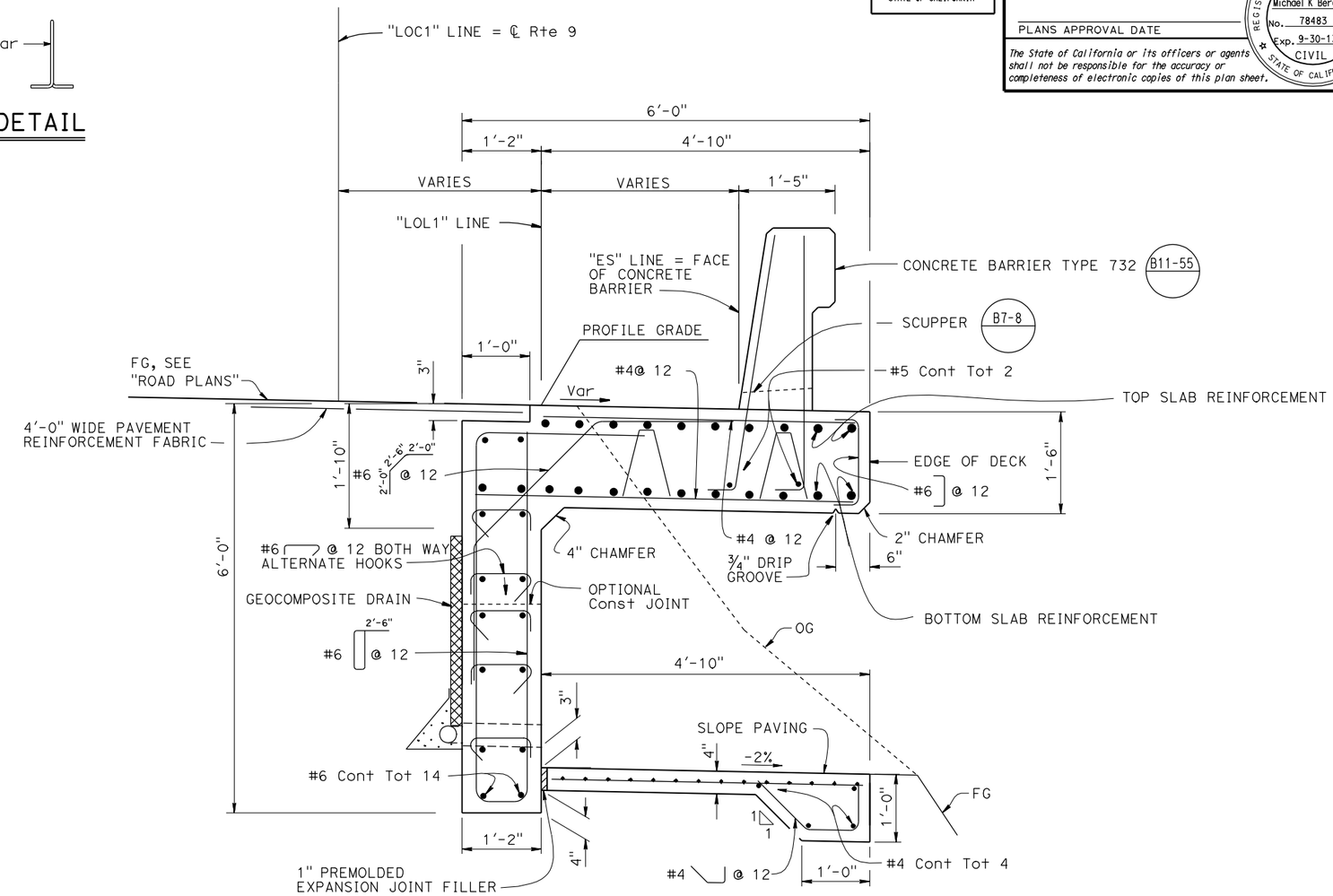

NOTES:
1. For Scupper locations, see "STRUCTURE PLANS NO. 1", "STRUCTURE PLANS NO. 2" and "STRUCTURE PLANS NO. 3" sheets
2. For slab reinforcement not shown,see "BOTTOM SLAB REINFORCEMENT NO. 1", "BOTTOM SLAB REINFORCEMENT NO. 2", TOP SLAB REINFORCEMENT NO. 1" and "TOP SLAB REINFORCEMENT NO. 2" sheets
3. For details not shown, see "TYPICAL SECTION WITHOUT PAVING NOTCH"
4. For "GEOCOMPOSITE DRAIN" details, see "DRAINAGE DETAILS" sheet
5. For slope paving reinfocement see"SECTION B-B" on "BENT DETAILS" sheet

TYPICAL SECTION WITH PAVING NOTCH

1" = 1'-0"

HIGHWAY 9 STORMWATER MITIGATION

SIDEHILL VIADUCT/RETAINING WALL @ PM 3.76

TYPICAL SECTION NO. 1

	BY	CHECKED
DESIGN	Art V Herrera	-
DETAILS	S Motalebi/N Gwynn	-
QUANTITIES		X

STATE OF CALIFORNIA
DEPARTMENT OF TRANSPORTATION

DIVISION OF ENGINEERING SERVICES
STRUCTURE DESIGN
DESIGN BRANCH 3

BRIDGE NO. 36E0039
POST MILE 3.76

STRUCTURES DESIGN DETAIL SHEET (ENGLISH) (REV. 09-01-10)

ORIGINAL SCALE IN INCHES FOR REDUCED PLANS 0 1 2 3

UNIT: 3578
PROJECT NUMBER & PHASE: 05000003171
CONTRACT NO.: 05-005901

DISREGARD PRINTS BEARING EARLIER REVISION DATES

REVISION DATES: 11-27-12, 1-14-13

SHEET 11 OF X

FILE => 36e0039-1-ts01.dgn

USERNAME => s136540 DATE PLOTTED => 04-MAR-2013 TIME PLOTTED => 13:51

Attachment 4

DIST	COUNTY	ROUTE	POST MILES TOTAL PROJECT	SHEET No.	TOTAL SHEETS
05	SCr	9			

INCOMPLETE PLAN FOR DESIGN STUDY PRINTED

DATE: 04-MAR-2013

Office of Structure Design
STATE OF CALIFORNIA

REGISTERED CIVIL ENGINEER X DATE

PLANS APPROVAL DATE

REGISTERED PROFESSIONAL ENGINEER Michael K Bergman No. 78483 Exp. 9-30-13 CIVIL STATE OF CALIFORNIA

The State of California or its officers or agents shall not be responsible for the accuracy or completeness of electronic copies of this plan sheet.

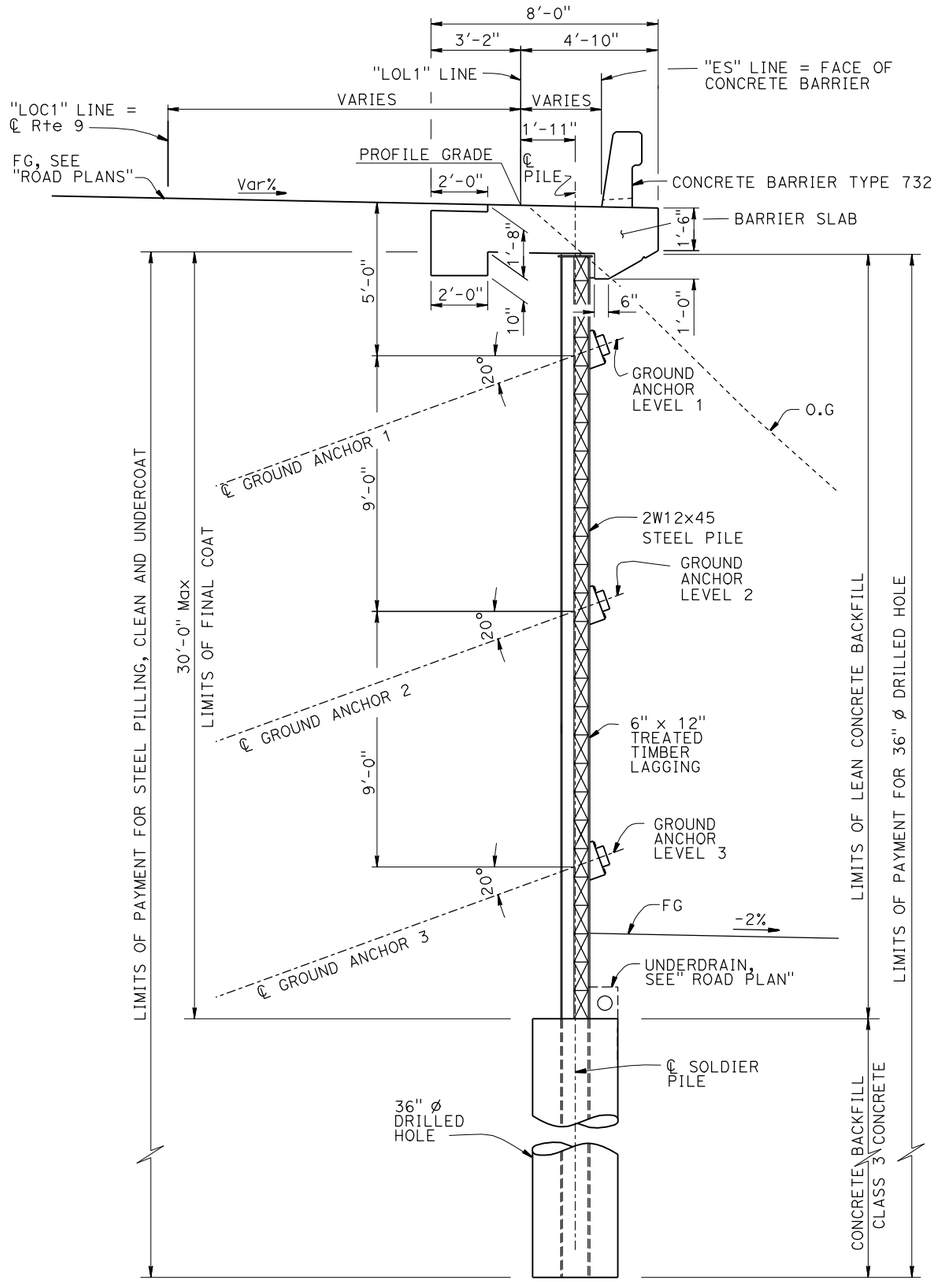

TYPICAL SECTION - RETAINING WALL

3/8" = 1'-0"

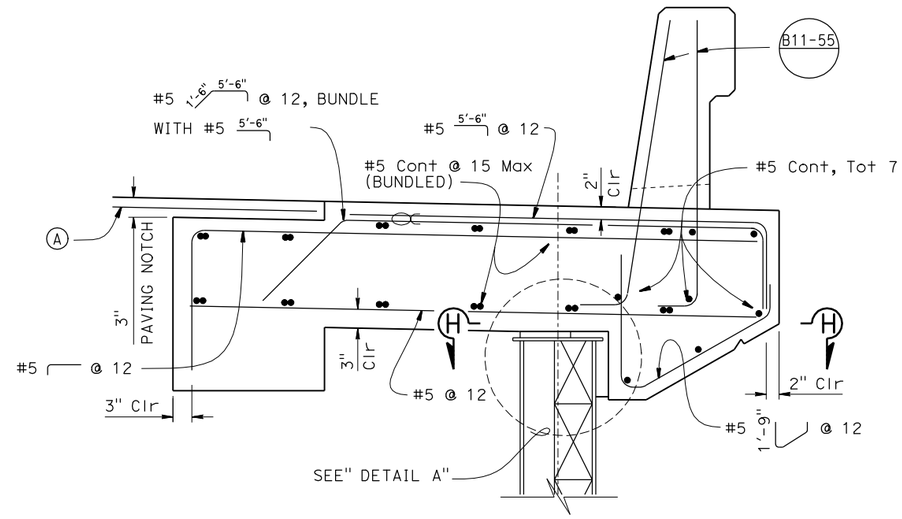

PART TYPICAL SECTION

1" = 1'-0"

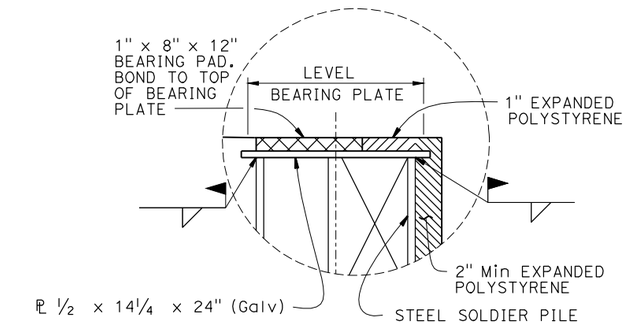

DETAIL A

NO SCALE

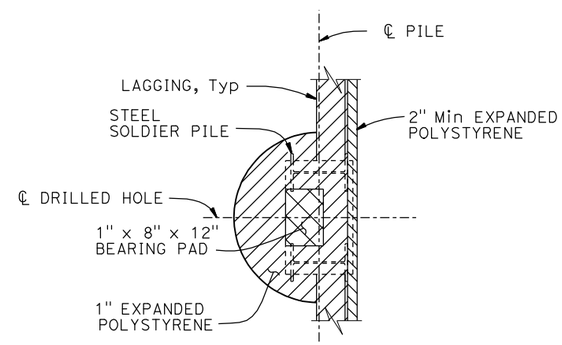

SECTION H-H

3/4" = 1'-0"

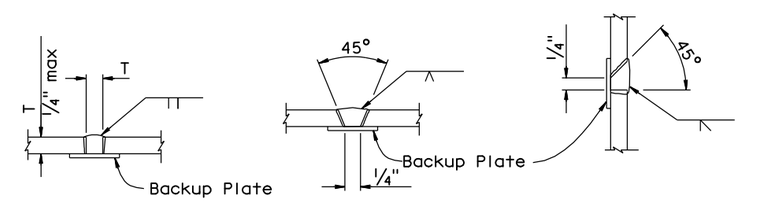

SQUARE GROOVE SINGLE VEE-GROOVE SINGLE BEVEL-GROOVE

PILE WELDING DETAIL-BUTT JOINTS

Notes:

1. Single Vee-Groove And Square Groove Permitted for all positions.
2. Single Bevel-Groove permitted for horizontal joints only

NOTES:

1. Not all barrier reinforcement shown
2. No expansion joints in concrete barrier or barrier slab within wall limits
3. Shape the top treated timber lagging to be parallel with the bottom of concrete barrier slab
4. Place treated timber logging level

LEGEND:

(A) 4'-0" wide pavement reinforcing fabric

∝ Indicates bundled bars

HIGHWAY 9 STORMWATER MITIGATION

SIDEHILL VIADUCT/RETAINING WALL @ PM 3.76

TYPICAL SECTION NO. 2

	BY	CHECKED
DESIGN	Mike Bergman	-
DETAILS	S Motalebi/N Gwynn	-
QUANTITIES		X

STATE OF CALIFORNIA DEPARTMENT OF TRANSPORTATION

DIVISION OF ENGINEERING SERVICES STRUCTURE DESIGN DESIGN BRANCH 3

BRIDGE NO. 36E0039

POST MILE 3.76

STRUCTURES DESIGN DETAIL SHEET (ENGLISH) (REV. 09-01-10)

ORIGINAL SCALE IN INCHES FOR REDUCED PLANS 0 1 2 3

UNIT: 3578

PROJECT NUMBER & PHASE: 05000003171

CONTRACT NO.: 05-005901

DISREGARD PRINTS BEARING EARLIER REVISION DATES

REVISION DATES 11-29-12 1-14-13

SHEET 12 OF X

FILE => 36e0039-1-ts02.dgn

USERNAME => s136540 DATE PLOTTED => 04-MAR-2013 TIME PLOTTED => 13:51

Attachment 4

SANTA CRUZ TIMBER
LAGGING WALL

05-45503

S-PILE #	DRILL* DEPTH FOR SLURRY (FT.)	DRILL* DEPTH FOR TIP (FT.)	DIFF. (FT)	% OF SHAFT REQUIRING SLURRY RE-DRILL
1	53	60	7	88
2		57		
3		55		
4		53		
5	31	52	21	60
6	18	52	34	35
7		53		
8	30	53	23	57
9		55		
10	29	57	28	51
11	35	58	23	60
12	40	59	19	68
13	43	59	16	73
14	46	59	13	77
15	42	59	17	71
16	45	58	13	78
17	47	57	10	82

* DEPTHS FOR TOP OF HOLE

STATE OF CALIFORNIA DEPARTMENT OF TRANSPORTATION

DC CEM-480 (OLD DC-52 REV. 11/92) (SB-3520-0) SHEET OF

JOB STAMP | ITEM | FILE NO

SANTA CRUZ TIMBER
LAGGING WALL

LOCATION | CROSS REF. | YES NO

CALC BY | DATE

CHK BY | DATE

S-PILE #	DRILL DEPTH FOR SLURRY (FT.)	DRILL DEPTH FOR TIP (FT.)	DIFF. (FT.)	% OF SHAFT REQUIRING SLURRY RE-DRILL
18	43	57	14	75
19	45	57	12	79
20	40	58	18	69
21	44	61	17	72
22	47	63	16	75

FOR DATE | SHEET | JOB STAMP

CEM-480 (10/95)

Santa Cruz Timber Lagging Wall

CT 05-452504

DRILLED HOLE

SLURRIED AT.

ELEV. FROM TOP OF DIRT

Pile#	Sta.	P.G. Elev. @ RWLOL	Top of Pile Elev.	Bot of Pile Elev.	Spacing	# Lagging	Bot Of Lagging El	Top Of Cl3 conc	Drilled Hole 750 mm m		Soldier Pile W360x196 m	W14x132 ft	Timber Lagging ea	Length(ft)
Beg. Wall	106.500	496.450	495.98	474.98										
1	107.100	496.478	495.97	474.97	2.30	14.00	491.40	487.97	53'	~~19.74~~	60'	21.00	69.00	14.00	8.00
2	109.400	496.426	495.92	474.92	2.30	17.00	490.41	487.92		~~18.89~~	57'	21.00	69.00	17.00	8.00
3	111.700	496.365	495.86	474.86	2.30	21.00	489.10	487.86		~~18.13~~	55'	21.00	69.00	21.00	8.00
4	114.000	496.297	495.79	474.79	2.30	25.00	487.78	487.79		~~17.33~~	53'	21.00	69.00	25.00	8.00
5	116.300	496.221	495.71	474.71	2.30	25.00	487.70	487.71	31'	~~17.09~~	52'	21.00	69.00	25.00	8.00
6	118.600	496.136	495.63	474.63	2.30	25.00	487.61	487.63	18'	~~16.97~~	52'	21.00	69.00	25.00	8.00
7	120.900	496.044	495.53	474.53	2.30	25.00	487.52	487.53		~~17.27~~	53'	21.00	69.00	25.00	8.00
8	123.200	495.943	495.43	474.43	2.30	25.00	487.42	487.43	30'	~~17.55~~	53'	21.00	69.00	25.00	8.00
9	125.500	495.835	495.33	474.33	2.30	25.00	487.31	487.33		~~18.13~~	55'	21.00	69.00	25.00	8.00
10	127.800	495.718	495.21	474.21	2.30	25.00	487.20	487.21	29'	~~18.77~~	57'	21.00	69.00	25.00	8.00
11	130.100	495.593	495.08	474.08	2.30	25.00	487.07	487.08	35'	~~19.07~~	58'	21.00	69.00	25.00	8.00
PRVC	131.705	495.502	494.99				494.81							
12	132.400	495.462	494.95	473.95	2.30	25.00	486.94	486.95	40'	~~19.22~~	59'	21.00	69.00	25.00	8.00
13	134.700	495.330	494.83	473.83	2.30	25.00	486.82	486.83	43'	~~19.32~~	59'	21.00	69.00	25.00	8.00
14	137.000	495.225	494.72	473.72	2.30	25.00	486.70	486.72	46'	~~19.32~~	59'	21.00	69.00	25.00	8.00
15	139.300	495.127	494.62	473.62	2.30	25.00	486.61	486.62	42'	~~19.35~~	59'	21.00	69.00	25.00	8.00
16	141.600	495.041	494.53	473.53	2.30	25.00	486.52	486.53	45'	~~19.01~~	58'	21.00	69.00	25.00	8.00
17	143.900	494.968	494.46	473.46	2.30	25.00	486.45	486.46	47'	~~18.64~~	57'	21.00	69.00	25.00	8.00
18	146.200	494.907	494.40	473.40	2.30	25.00	486.39	486.40	43'	~~18.58~~	57'	21.00	69.00	25.00	8.00
19	148.500	494.859	494.35	473.35	2.30	25.00	486.34	486.35	45'	~~18.61~~	57'	21.00	69.00	25.00	8.00
20	150.800	494.823	494.31	473.31	2.30	25.00	486.30	486.31	40'	~~19.04~~	58'	21.00	69.00	25.00	8.00
21	153.100	494.860	494.29	473.29	2.30	25.00	486.28	486.29	44'	~~19.99~~	61'	21.00	69.00	25.00	8.00
22	155.400	494.790	494.28	473.28	2.30	25.00	486.27	486.28	47'	~~20.78~~	63'	21.00	69.00	25.00	8.00
E1	157.648				2.44	25.00								25.00	8.00
E2	160.086				2.44	25.00								25.00	8.00
E3	152.524				2.44	21.00								21.00	8.00
E4	164.962				2.44	21.00								21.00	8.00
E5	167.400				2.44	16.00								16.00	8.00
E6	169.838				2.438	15.00								15.00	8.00
E7	172.276				2.44	10.00								10.00	8.00
E8	174.714				2.44	6.00								6.00	8.00
E9	177.152														
									410.80	m	462.00	m	1,518.00 ft	666.00 ea	

Cobb 328 B

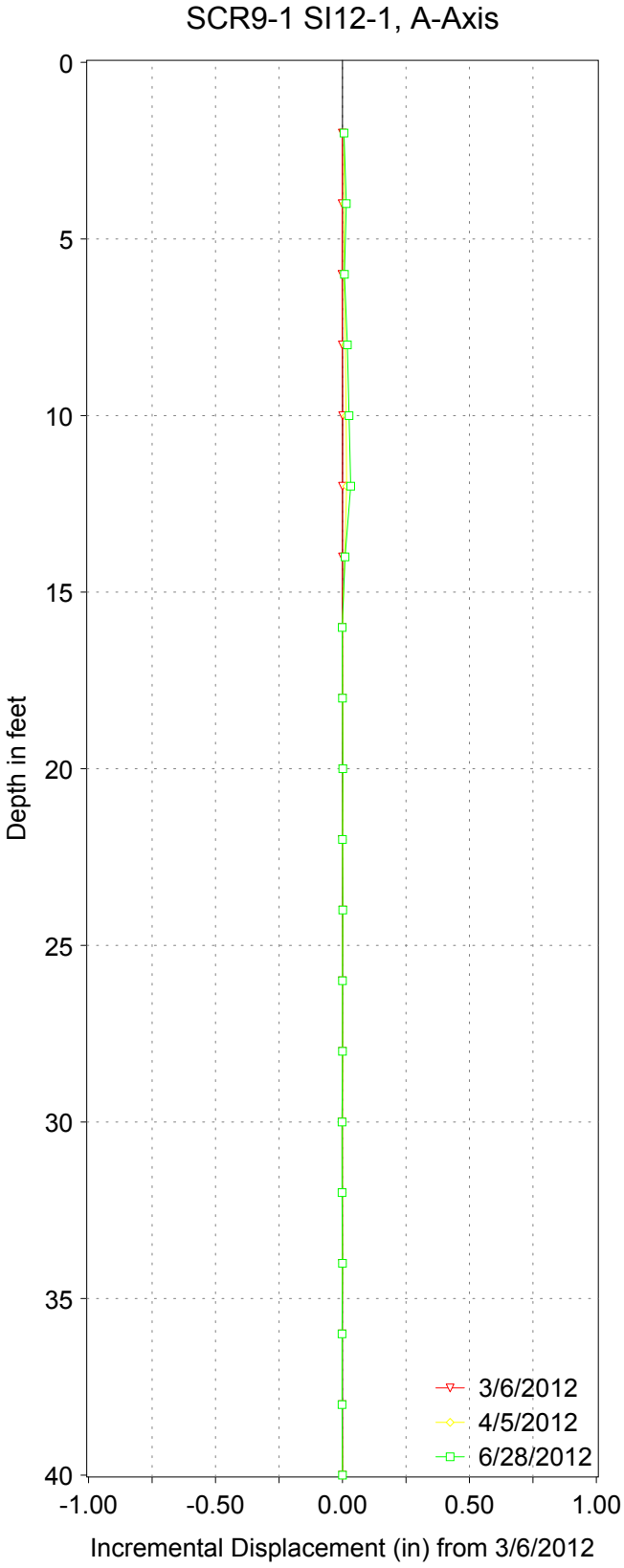

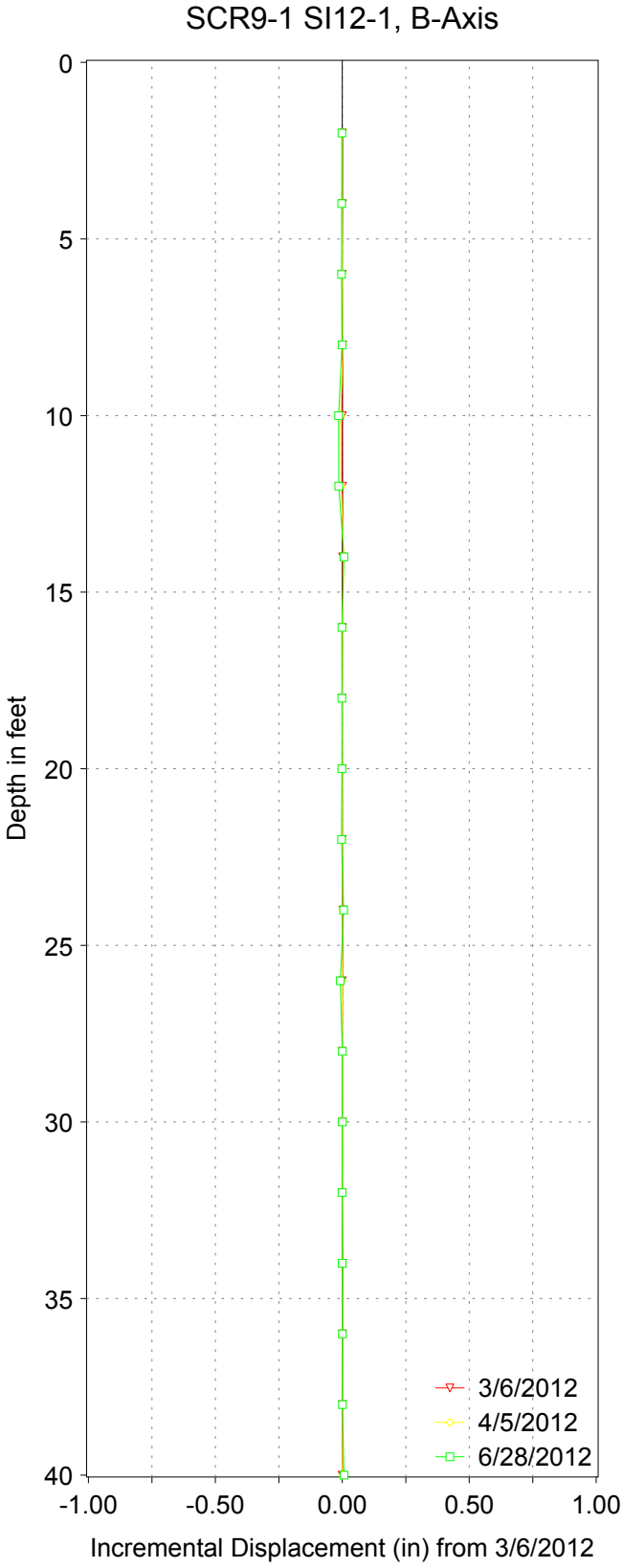

SCR-9-3.76 Storm Water Project
Initial reading 3/6/12

Attachment 6

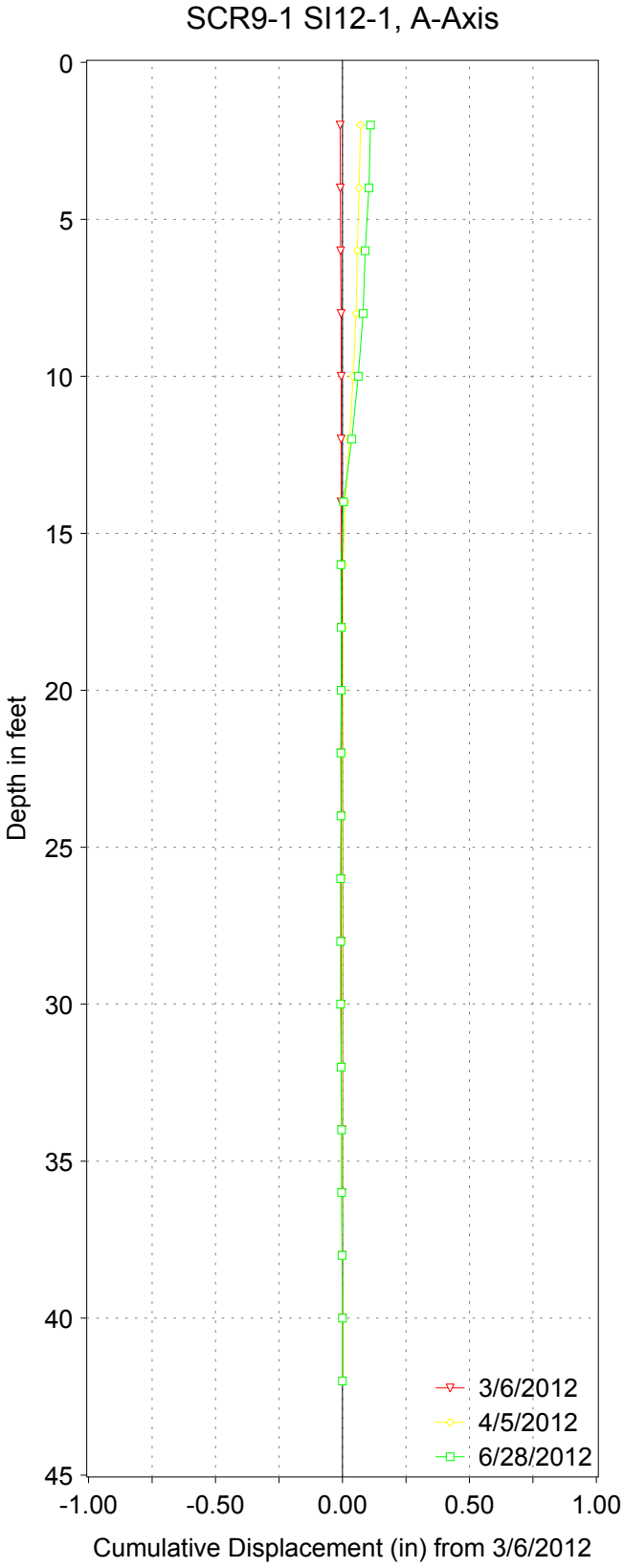

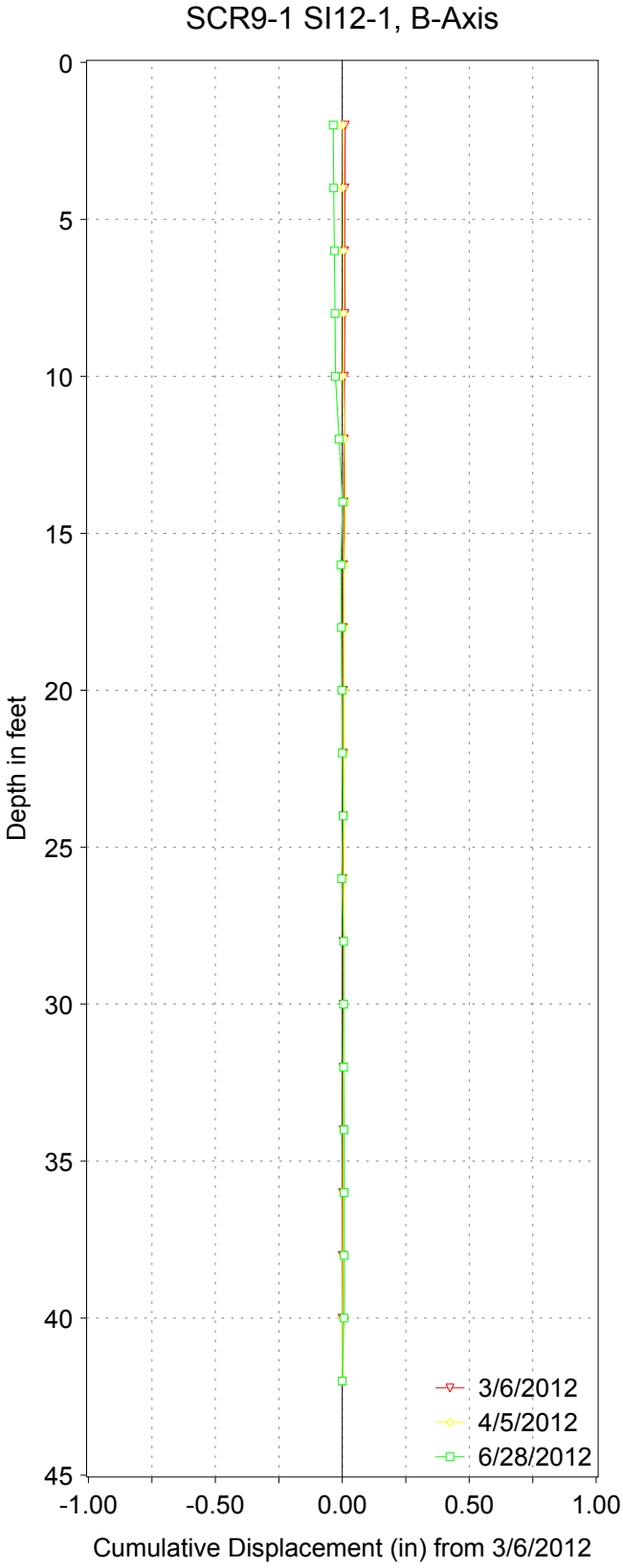

SCr-9-3.76 Storm Water Project
Initial Rerading 3/6/12

Attachment 6

Sidehill Viaduct/Retaining Wall @ PM 3.76

Bridge No. **36C0039** **SDC Controlling Procedure :** **Probabilistic**

Period (s)	SDC	
0.010	0.497	
0.050	0.833	
0.100	1.041	
0.150	1.125	
0.200	1.189	
0.250	1.075	
0.300	0.990	
0.400	0.812	
0.500	0.697	
0.600	0.622	
0.700	0.568	
0.850	0.507	
1.000	0.462	
1.200	0.387	
1.500	0.312	
2.000	0.236	
3.000	0.152	
4.000	0.109	
5.000	0.089	
5.000	0.225	

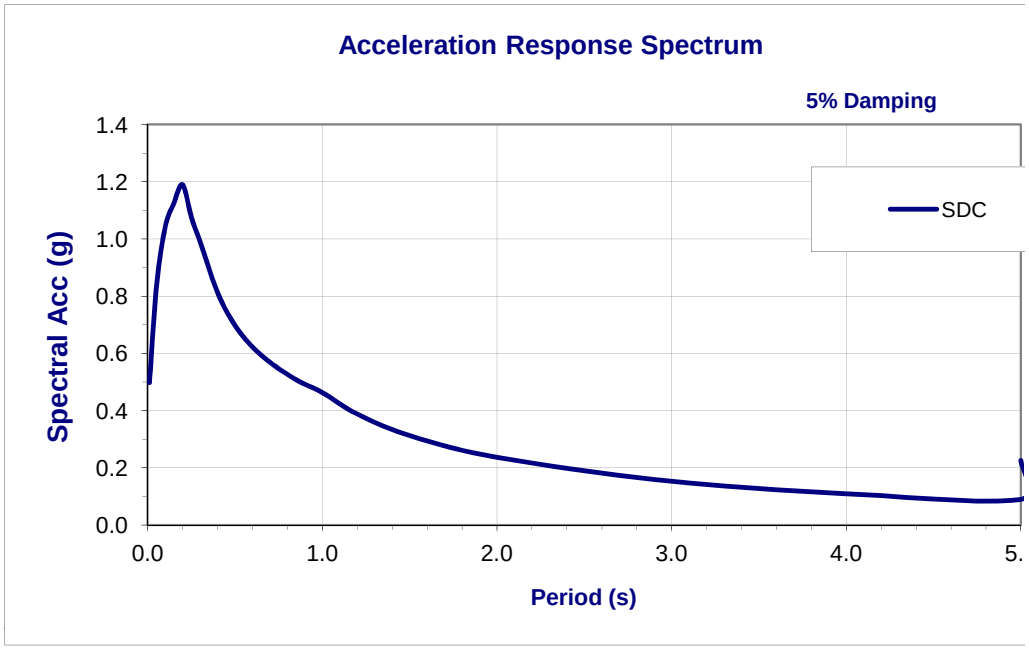

Deterministic Procedure Data

Fault	Zayante-Vergeles Lower 2011 CFM		R_{rup}	8.87	km
Fault ID	163		R_{jb}	0.00	km
Style	Strike-Slip		R_x	5.33	km
Mmax	7		V_{S30}	540.00	m/s
Dip	16	deg	$Z_{1.0}$	N/A	m
Z_{TOR}	0	km	$Z_{2.5}$	N/A	km

Notes

ARS curve was modified for Near Fault Directivity Effect (SDC Section 6.1.2.1)

ARS curve was modified for basin effect