Dist	COUNTY	ROUTE	POST MILES TOTAL PROJECT	SHEET No.	TOTAL SHEETS
05	Mon	101	R12.6/R15.5	1	42

INDEX OF PLANS

SHEET No.	DESCRIPTION
1	TITLE AND LOCATION MAP
2-5	TYPICAL CROSS SECTIONS
6-14	LAYOUTS
15-18	DRAINAGE PLAN, PROFILES, DETAILS AND QUANTITIES
19	UTILITY PLAN
20	CONSTRUCTION AREA SIGNS
21-27	PAVEMENT DELINEATION PLANS AND QUANTITIES
28	SUMMARY OF QUANTITIES
29-32	HIGHWAY PLANTING
33-42	REVISED AND NEW STANDARD PLANS

THE STANDARD PLANS LIST APPLICABLE TO THIS CONTRACT IS INCLUDED IN THE NOTICE TO BIDDERS AND SPECIAL PROVISIONS BOOK.

STATE OF CALIFORNIA

DEPARTMENT OF TRANSPORTATION

PROJECT PLANS FOR CONSTRUCTION ON

STATE HIGHWAY

IN MONTEREY COUNTY
ABOUT 6 MILES NORTH OF BRADLEY
FROM 2.9 MILES NORTH OF JOLON ROAD UNDERCROSSING
TO AT ALVARADO ROAD OVERCROSSING

TO BE SUPPLEMENTED BY STANDARD PLANS DATED MAY 2006

LOCATION MAP

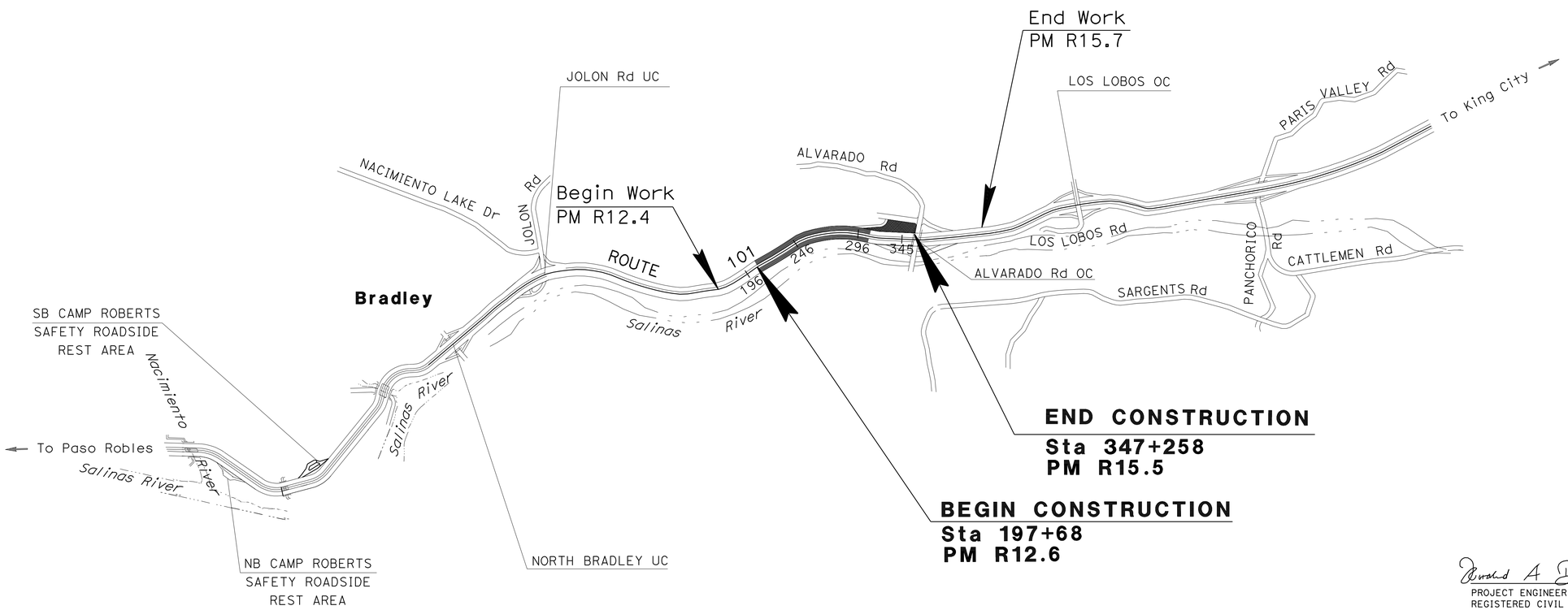

NO SCALE

THE CONTRACTOR SHALL POSSESS THE CLASS (OR CLASSES) OF LICENSE AS SPECIFIED IN THE "NOTICE TO BIDDERS."

PROJECT MANAGER: KEN DOSTALEK

DESIGN ENGINEER: ARTHUR RAMIREZ

Khalid A Dahir 8-25-09
PROJECT ENGINEER DATE
REGISTERED CIVIL ENGINEER

November 2, 2009
PLANS APPROVAL DATE

REGISTERED PROFESSIONAL ENGINEER — KHALID A. DAHIR — No. 70240 — Exp. 9/30/10 — CIVIL — STATE OF CALIFORNIA

THE STATE OF CALIFORNIA OR ITS OFFICERS OR AGENTS SHALL NOT BE RESPONSIBLE FOR THE ACCURACY OR COMPLETENESS OF SCANNED COPIES OF THIS PLAN SHEET.

CONTRACT No. **05-0Q2004**

LAST REVISION 08-26-09 | DATE PLOTTED => 05-NOV-2009 | TIME PLOTTED => 11:32

Dist	COUNTY	ROUTE	POST MILES TOTAL PROJECT	SHEET No.	TOTAL SHEETS
05	Mon	101	R12.6/R15.5	2	42

Khalid A Dahir 8-25-09
REGISTERED CIVIL ENGINEER DATE

11-2-09
PLANS APPROVAL DATE

REGISTERED PROFESSIONAL ENGINEER KHALID A. DAHIR No. 70240 Exp. 9/30/10 CIVIL STATE OF CALIFORNIA

THE STATE OF CALIFORNIA OR ITS OFFICERS OR AGENTS SHALL NOT BE RESPONSIBLE FOR THE ACCURACY OR COMPLETENESS OF SCANNED COPIES OF THIS PLAN SHEET.

NOTES:

1. DIMENSIONS OF THE STRUCTURAL SECTIONS ARE SUBJECT TO TOLERANCES SPECIFIED IN THE STANDARD SPECIFICATIONS.
2. SUPERELEVATION AS SHOWN OR AS DIRECTED BY THE ENGINEER
3. STATIONING SHOWN IS FOR CONSTRUCTION PURPOSES ONLY
4. FOG SEAL COAT SHALL BE APPLIED TO NEW AND EXISTING SHOULDERS BETWEEN STA 197+68 AND 303+28

DESIGN DESIGNATION (Mon-101)

2010 ADT= 16 530 D = 55%
2020 ADT= 20 390 T = 4%
2030 ADT= 24 250 V = 65 MPH
2020 DHV= 1 339
2030 DHV= 1 531

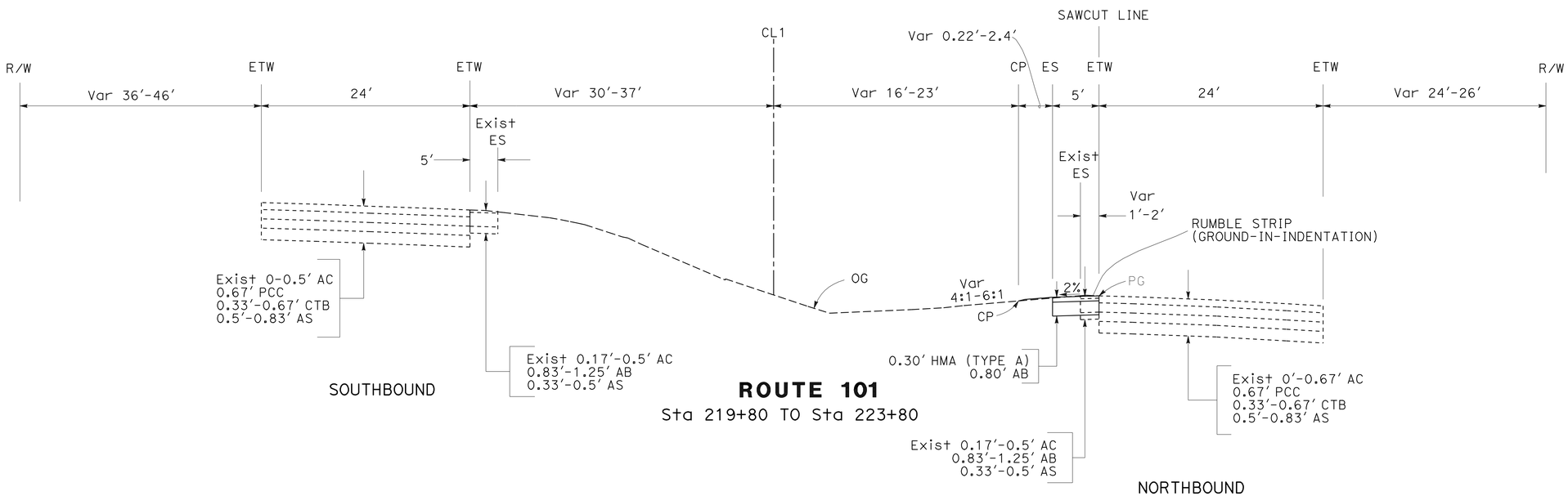

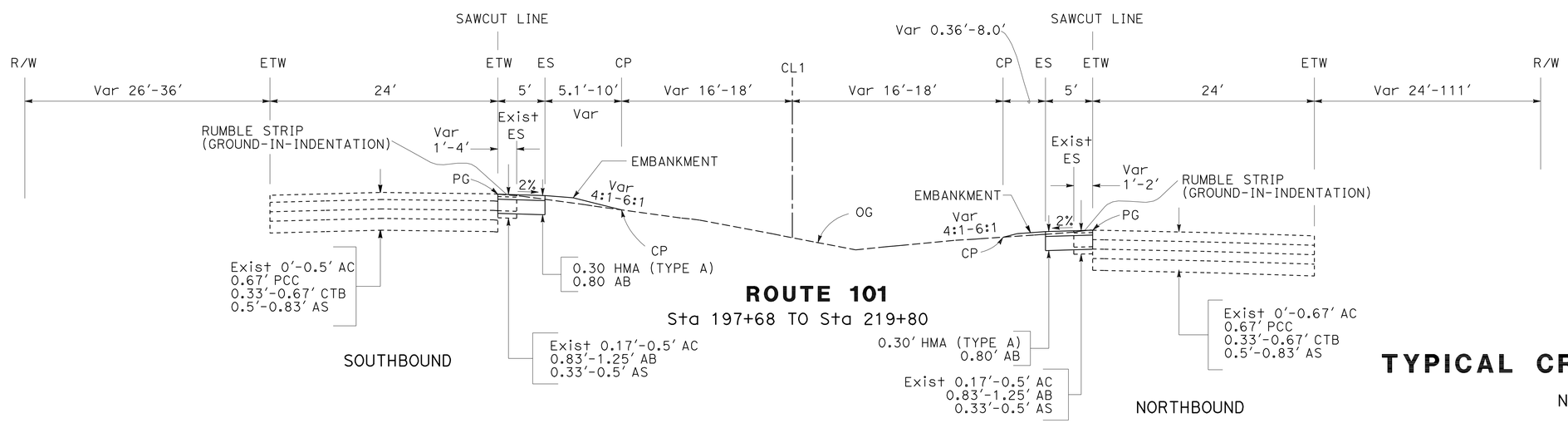

TYPICAL CROSS SECTIONS

NO SCALE

X-1

REVISED BY	DATE REVISED

CALCULATED-DESIGNED BY	CHECKED BY
JOHNNY REYES	KHALID DAHIR

FUNCTIONAL SUPERVISOR: ARTHUR RAMIREZ

STATE OF CALIFORNIA - DEPARTMENT OF TRANSPORTATION
Caltrans
06-DESIGN

LAST REVISION 08-25-09 | DATE PLOTTED => 05-NOV-2009 | TIME PLOTTED => 11:32

Dist	COUNTY	ROUTE	POST MILES TOTAL PROJECT	SHEET No.	TOTAL SHEETS
05	Mon	101	R12.6/R15.5	3	42

Khalid A Dahir 8-25-09
REGISTERED CIVIL ENGINEER DATE

11-2-09
PLANS APPROVAL DATE

REGISTERED PROFESSIONAL ENGINEER KHALID A. DAHIR No. 70240 Exp. 9/30/10 CIVIL STATE OF CALIFORNIA

THE STATE OF CALIFORNIA OR ITS OFFICERS OR AGENTS SHALL NOT BE RESPONSIBLE FOR THE ACCURACY OR COMPLETENESS OF SCANNED COPIES OF THIS PLAN SHEET.

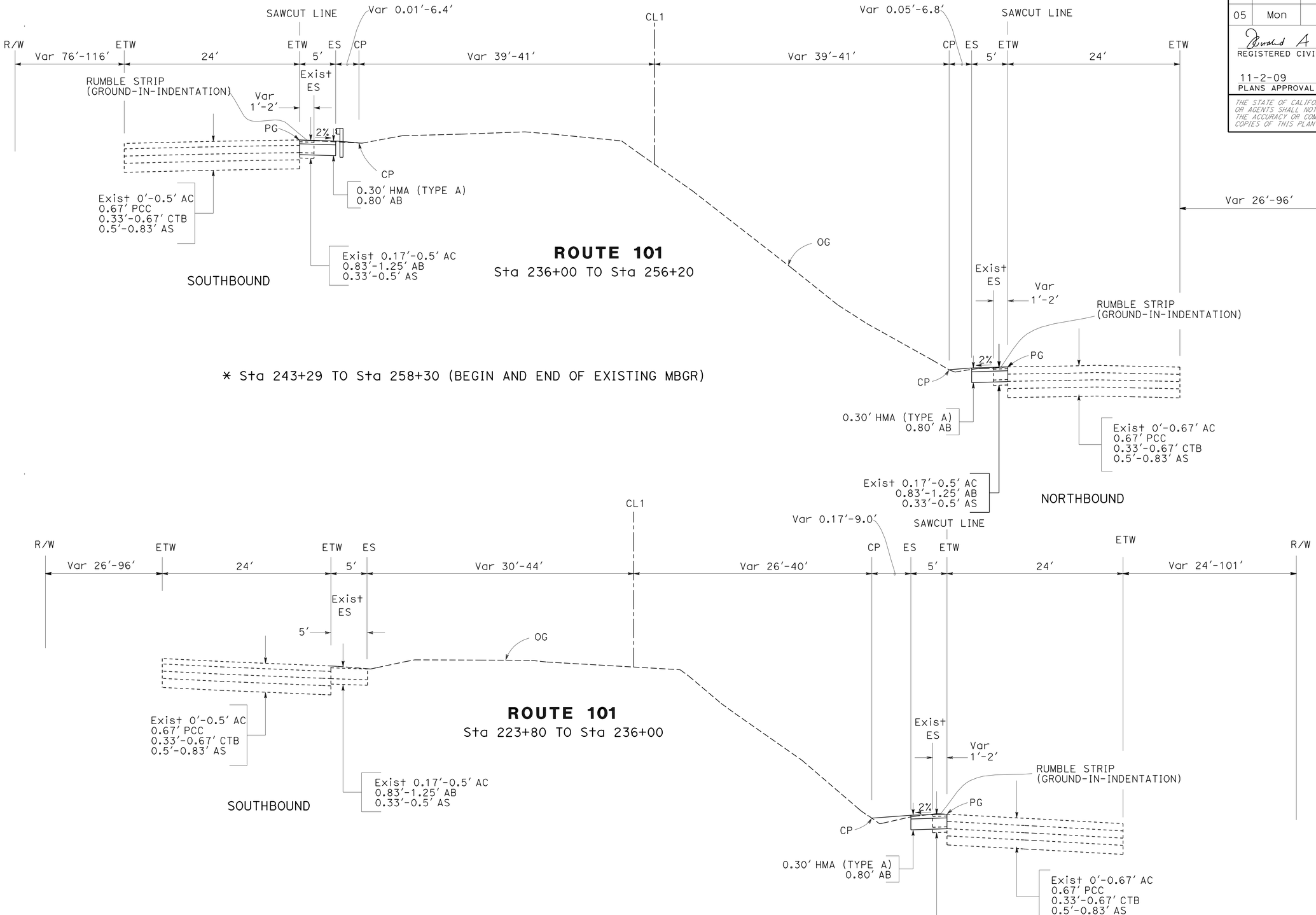

TYPICAL CROSS SECTIONS

NO SCALE

X-2

REVISED BY	DATE REVISED

CALCULATED-DESIGNED BY: JOHNNY REYES
CHECKED BY: KHALID DAHIR
FUNCTIONAL SUPERVISOR: ARTHUR RAMIREZ

STATE OF CALIFORNIA - DEPARTMENT OF TRANSPORTATION
Caltrans
06-DESIGN

LAST REVISION 08-17-09
DATE PLOTTED => 05-NOV-2009
TIME PLOTTED => 11:33

Dist	COUNTY	ROUTE	POST MILES TOTAL PROJECT	SHEET No.	TOTAL SHEETS
05	Mon	101	R12.6/R15.5	4	42

REGISTERED CIVIL ENGINEER 8-25-09 DATE

11-2-09
PLANS APPROVAL DATE

REGISTERED PROFESSIONAL ENGINEER KHALID A. DAHIR No. 70240 Exp 9/30/10 CIVIL STATE OF CALIFORNIA

THE STATE OF CALIFORNIA OR ITS OFFICERS OR AGENTS SHALL NOT BE RESPONSIBLE FOR THE ACCURACY OR COMPLETENESS OF SCANNED COPIES OF THIS PLAN SHEET.

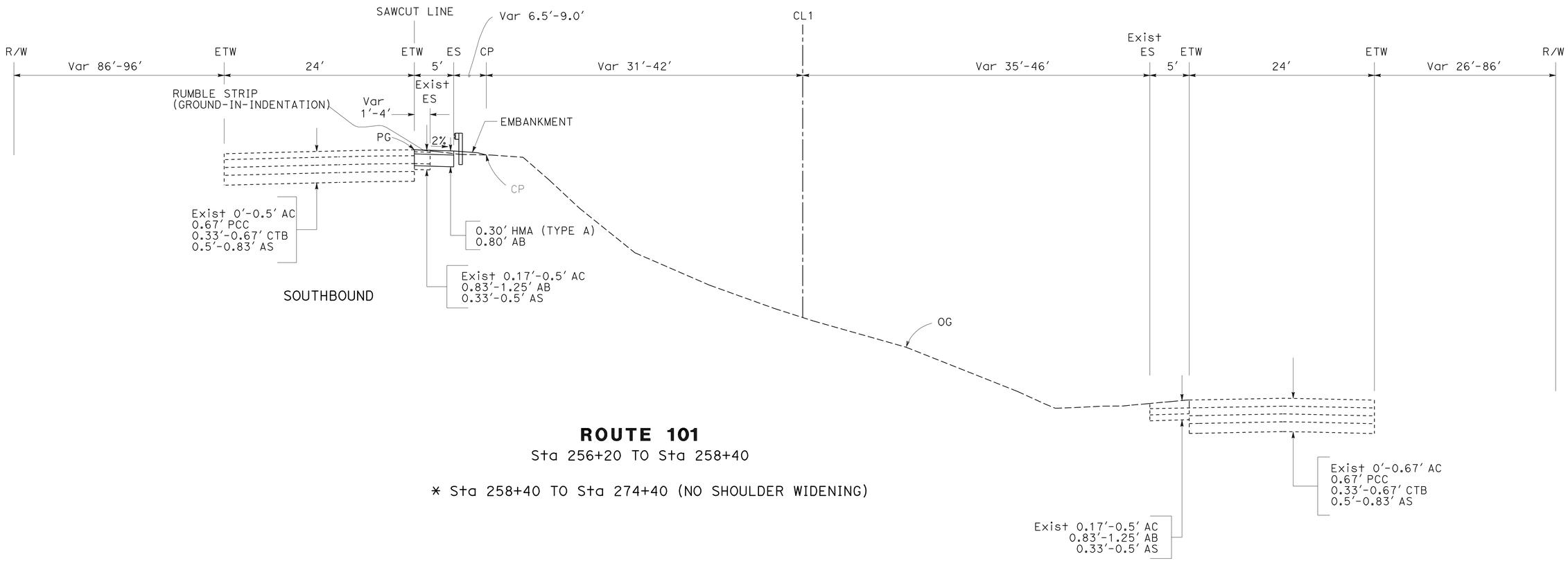

ROUTE 101

Sta 256+20 TO Sta 258+40

* Sta 258+40 TO Sta 274+40 (NO SHOULDER WIDENING)

TYPICAL CROSS SECTION

NO SCALE

X-3

REVISED BY	
DATE REVISED	
CALCULATED-DESIGNED BY	JOHNNY REYES
CHECKED BY	KHALID DAHIR
FUNCTIONAL SUPERVISOR	ARTHUR RAMIREZ

STATE OF CALIFORNIA - DEPARTMENT OF TRANSPORTATION
Caltrans
06-DESIGN

LAST REVISION 08-25-09 | DATE PLOTTED => 05-NOV-2009 | TIME PLOTTED => 11:33

Dist	COUNTY	ROUTE	POST MILES TOTAL PROJECT	SHEET No.	TOTAL SHEETS
05	Mon	101	R12.6/R15.5	5	42

REGISTERED CIVIL ENGINEER 8-25-09 DATE

11-2-09
PLANS APPROVAL DATE

REGISTERED PROFESSIONAL ENGINEER KHALID A. DAHIR No. 70240 Exp. 9/30/10 CIVIL STATE OF CALIFORNIA

THE STATE OF CALIFORNIA OR ITS OFFICERS OR AGENTS SHALL NOT BE RESPONSIBLE FOR THE ACCURACY OR COMPLETENESS OF SCANNED COPIES OF THIS PLAN SHEET.

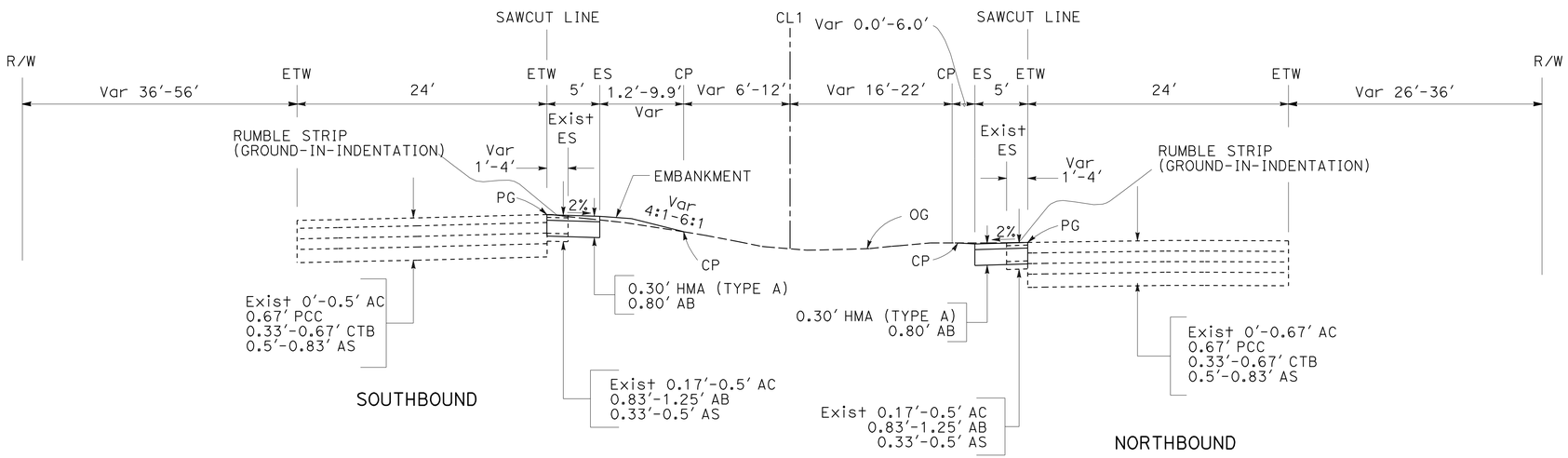

ROUTE 101

Sta 286+00 TO Sta 303+28

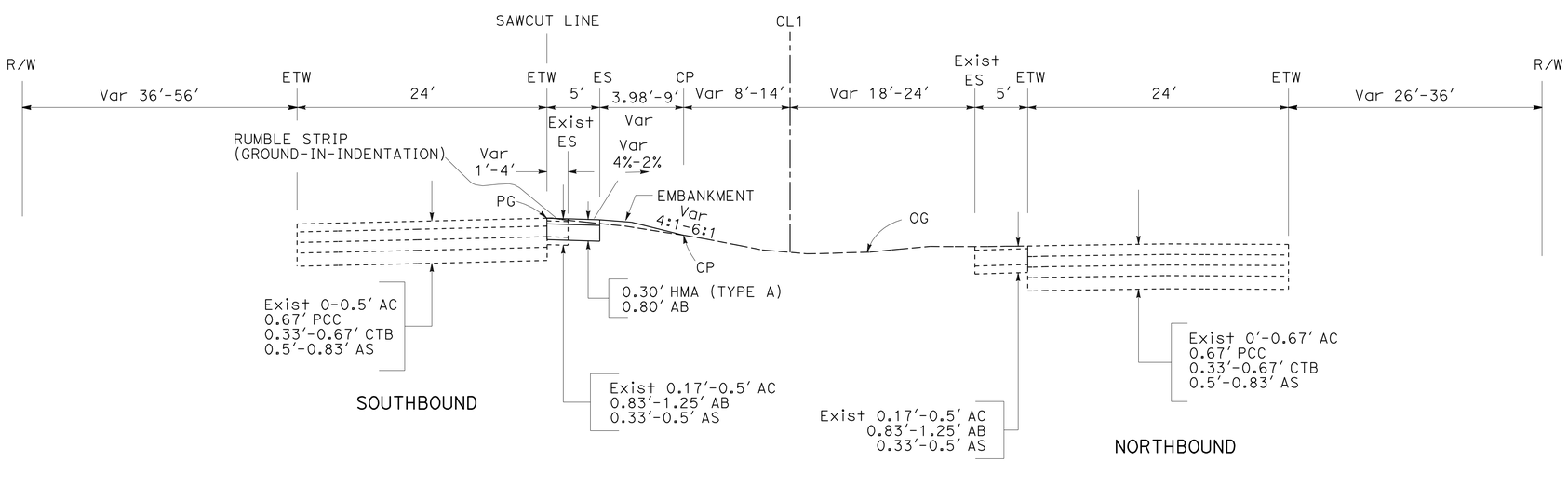

ROUTE 101

Sta 274+40 TO Sta 286+00

TYPICAL CROSS SECTIONS

NO SCALE

X-4

STATE OF CALIFORNIA - DEPARTMENT OF TRANSPORTATION
Caltrans®
06-DESIGN

FUNCTIONAL SUPERVISOR: ARTHUR RAMIREZ
CALCULATED-DESIGNED BY: JOHNNY REYES
CHECKED BY: KHALID DAHIR
REVISED BY
DATE REVISED

LAST REVISION 08-25-09
DATE PLOTTED => 05-NOV-2009
TIME PLOTTED => 11:33

Dist	COUNTY	ROUTE	POST MILES TOTAL PROJECT	SHEET No.	TOTAL SHEETS
05	Mon	101	R12.6/R15.5	6	42

Khalid A Dahir 8-25-09
REGISTERED CIVIL ENGINEER DATE

11-2-09
PLANS APPROVAL DATE

REGISTERED PROFESSIONAL ENGINEER KHALID A. DAHIR No. 70240 Exp. 9/30/10 CIVIL STATE OF CALIFORNIA

THE STATE OF CALIFORNIA OR ITS OFFICERS OR AGENTS SHALL NOT BE RESPONSIBLE FOR THE ACCURACY OR COMPLETENESS OF SCANNED COPIES OF THIS PLAN SHEET.

NOTE: FOR ACCURATE RIGHT OF WAY AND ACCESS DATA, CONTACT RIGHT OF WAY ENGINEERING AT THE DISTRICT OFFICE.

LEGEND

REMOVE TREE

PROTECT SURVEY MONUMENT

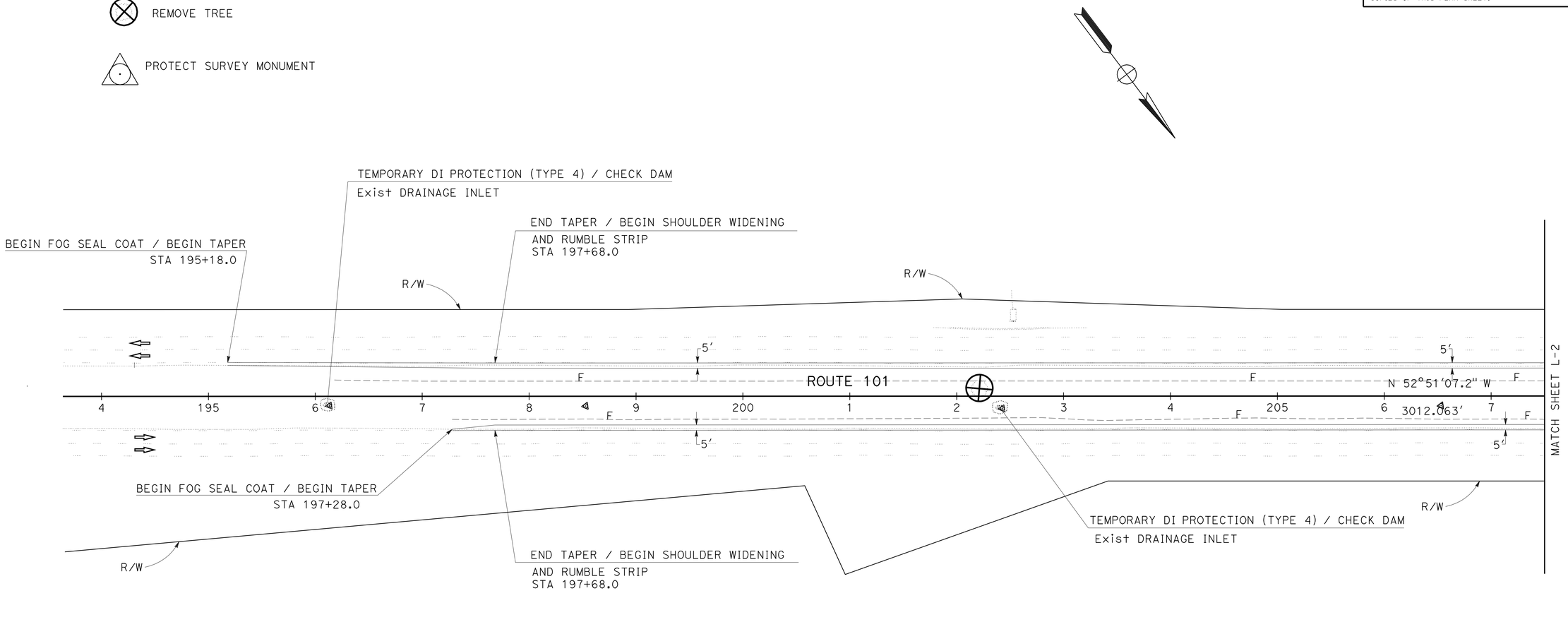

LAYOUT L-1

SCALE: 1"=50'

STATE OF CALIFORNIA - DEPARTMENT OF TRANSPORTATION
Caltrans
06-DESIGN

FUNCTIONAL SUPERVISOR: ARTHUR RAMIREZ

CALCULATED-DESIGNED BY: JOHNNY REYES
CHECKED BY: KHALID DAHIR

REVISED BY
DATE REVISED

LAST REVISION 08-19-09
DATE PLOTTED => 05-NOV-2009
TIME PLOTTED => 11:33

Dist	COUNTY	ROUTE	POST MILES TOTAL PROJECT	SHEET No.	TOTAL SHEETS
05	Mon	101	R12.6/R15.5	7	42

Khalid A Dahir 8-25-09
REGISTERED CIVIL ENGINEER DATE

11-2-09
PLANS APPROVAL DATE

REGISTERED PROFESSIONAL ENGINEER KHALID A. DAHIR No. 70240 Exp. 9/30/10 CIVIL STATE OF CALIFORNIA

THE STATE OF CALIFORNIA OR ITS OFFICERS OR AGENTS SHALL NOT BE RESPONSIBLE FOR THE ACCURACY OR COMPLETENESS OF SCANNED COPIES OF THIS PLAN SHEET.

NOTE: FOR ACCURATE RIGHT OF WAY AND ACCESS DATA, CONTACT RIGHT OF WAY ENGINEERING AT THE DISTRICT OFFICE.

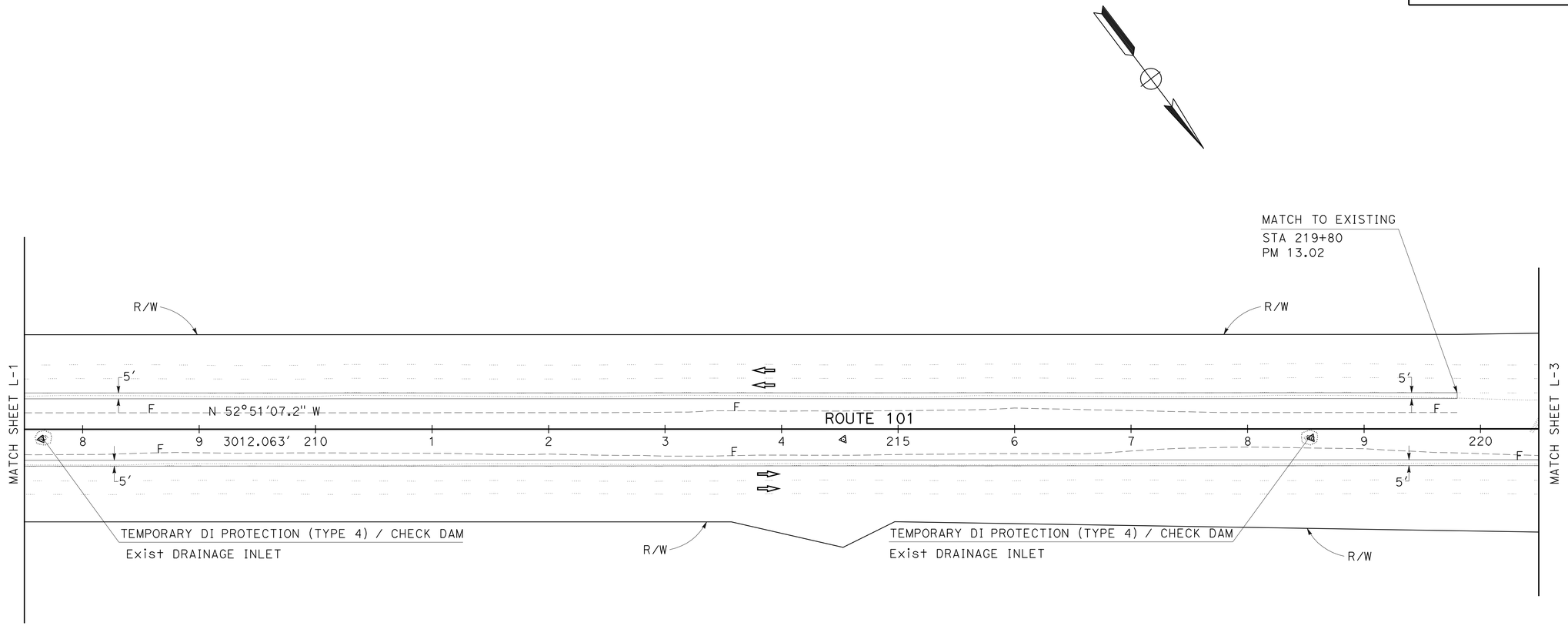

LAYOUT L-2

SCALE: 1"=50'

STATE OF CALIFORNIA - DEPARTMENT OF TRANSPORTATION
Caltrans
06-DESIGN

FUNCTIONAL SUPERVISOR: ARTHUR RAMIREZ
CALCULATED-DESIGNED BY: JOHNNY REYES
CHECKED BY: KHALID DAHIR
REVISED BY
DATE REVISED

LAST REVISION 08-19-09
DATE PLOTTED => 05-NOV-2009
TIME PLOTTED => 11:33

Dist	COUNTY	ROUTE	POST MILES TOTAL PROJECT	SHEET No.	TOTAL SHEETS
05	Mon	101	R12.6/R15.5	8	42

Khalid A Dahir 8-25-09
REGISTERED CIVIL ENGINEER DATE

11-2-09
PLANS APPROVAL DATE

REGISTERED PROFESSIONAL ENGINEER
KHALID A. DAHIR
No. 70240
Exp 9/30/10
CIVIL
STATE OF CALIFORNIA

THE STATE OF CALIFORNIA OR ITS OFFICERS OR AGENTS SHALL NOT BE RESPONSIBLE FOR THE ACCURACY OR COMPLETENESS OF SCANNED COPIES OF THIS PLAN SHEET.

NOTE: FOR ACCURATE RIGHT OF WAY AND ACCESS DATA, CONTACT RIGHT OF WAY ENGINEERING AT THE DISTRICT OFFICE.

CURVE DATA

No.	R	Δ	T	L
1	3993.51′	12°38′45″	442.51′	881.42′

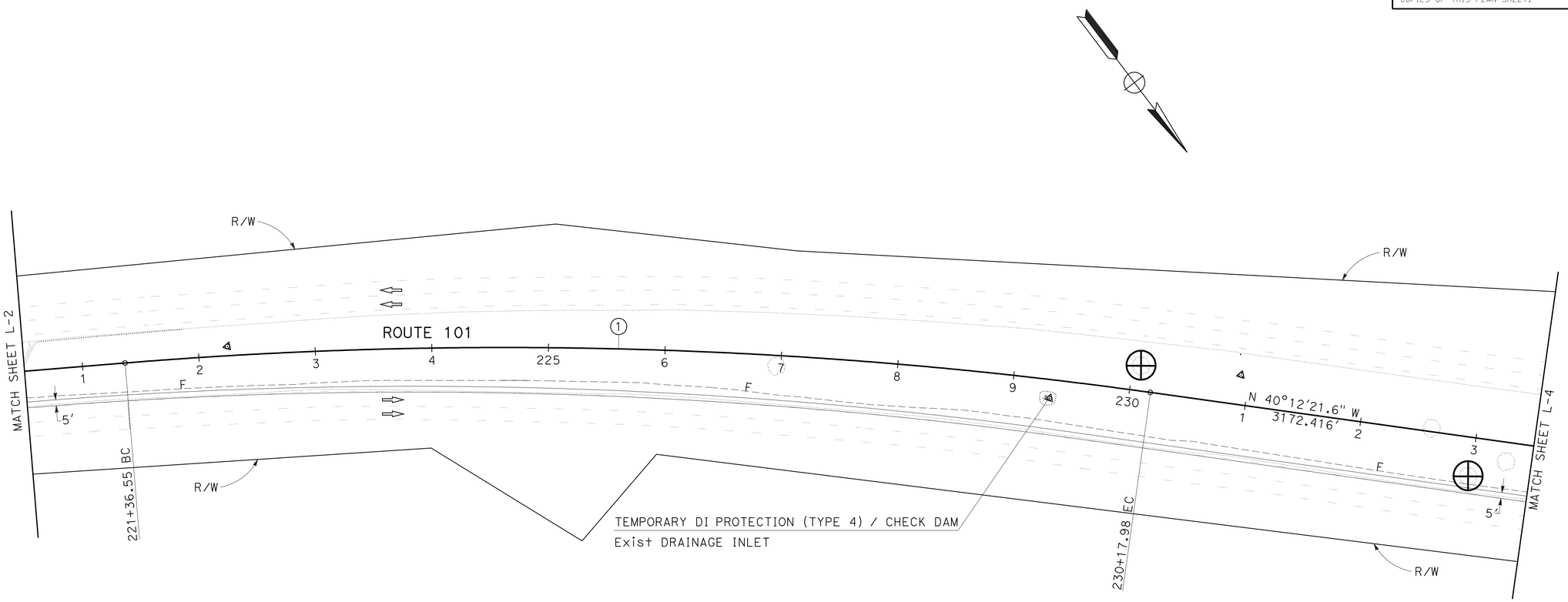

SCALE: 1″=50′

LAYOUT
L-3

STATE OF CALIFORNIA - DEPARTMENT OF TRANSPORTATION
Caltrans
06-DESIGN

FUNCTIONAL SUPERVISOR: ARTHUR RAMIREZ
CALCULATED-DESIGNED BY: JOHNNY REYES
CHECKED BY: KHALID DAHIR
REVISED BY
DATE REVISED

LAST REVISION 08-25-09
DATE PLOTTED => 05-NOV-2009
TIME PLOTTED => 11:33

Dist	COUNTY	ROUTE	POST MILES TOTAL PROJECT	SHEET No.	TOTAL SHEETS
05	Mon	101	R12.6/R15.5	9	42

Khalid A Dahir 8-25-09
REGISTERED CIVIL ENGINEER DATE

11-2-09
PLANS APPROVAL DATE

REGISTERED PROFESSIONAL ENGINEER KHALID A. DAHIR No. 70240 Exp 9/30/10 CIVIL STATE OF CALIFORNIA

THE STATE OF CALIFORNIA OR ITS OFFICERS OR AGENTS SHALL NOT BE RESPONSIBLE FOR THE ACCURACY OR COMPLETENESS OF SCANNED COPIES OF THIS PLAN SHEET.

NOTE: FOR ACCURATE RIGHT OF WAY AND ACCESS DATA, CONTACT RIGHT OF WAY ENGINEERING AT THE DISTRICT OFFICE.

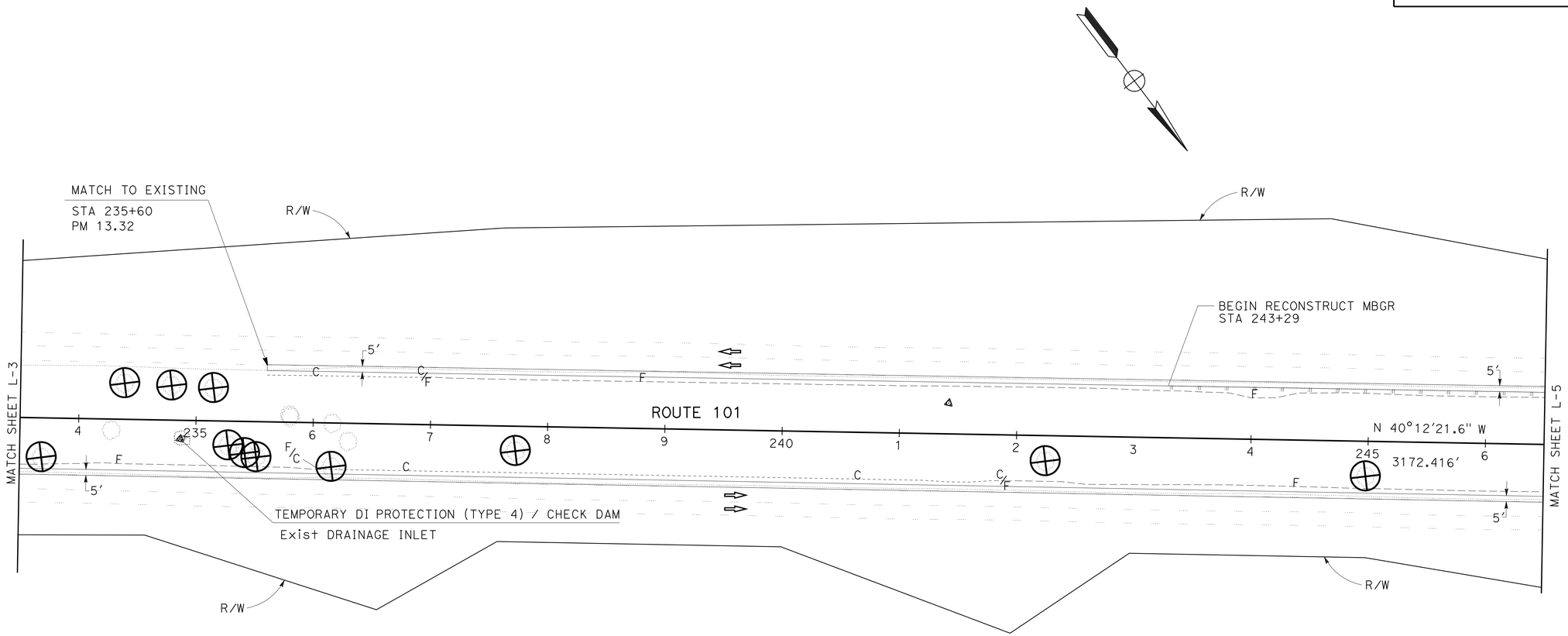

LAYOUT L-4

SCALE: 1"=50'

REVISED BY	DATE REVISED

CALCULATED-DESIGNED BY: JOHNNY REYES
CHECKED BY: KHALID DAHIR
FUNCTIONAL SUPERVISOR: ARTHUR RAMIREZ

STATE OF CALIFORNIA - DEPARTMENT OF TRANSPORTATION
Caltrans
06-DESIGN

LAST REVISION 08-25-09
DATE PLOTTED => 05-NOV-2009
TIME PLOTTED => 11:33

Dist	COUNTY	ROUTE	POST MILES TOTAL PROJECT	SHEET No.	TOTAL SHEETS
05	Mon	101	R12.6/R15.5	10	42

REGISTERED CIVIL ENGINEER 8-25-09 DATE

11-2-09
PLANS APPROVAL DATE

REGISTERED PROFESSIONAL ENGINEER KHALID A. DAHIR No. 70240 Exp. 9/30/10 CIVIL STATE OF CALIFORNIA

THE STATE OF CALIFORNIA OR ITS OFFICERS OR AGENTS SHALL NOT BE RESPONSIBLE FOR THE ACCURACY OR COMPLETENESS OF SCANNED COPIES OF THIS PLAN SHEET.

NOTE: FOR ACCURATE RIGHT OF WAY AND ACCESS DATA,
CONTACT RIGHT OF WAY ENGINEERING AT THE DISTRICT OFFICE.

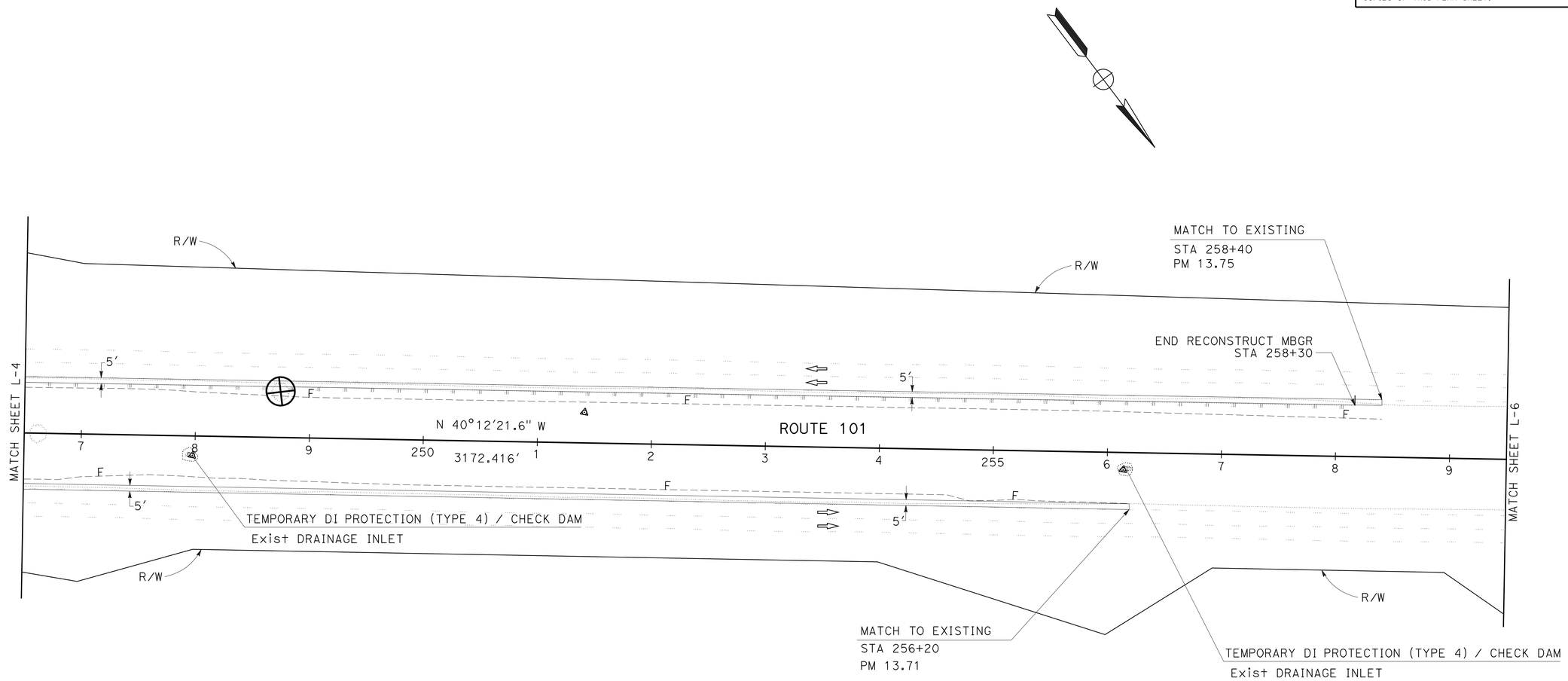

LAYOUT
L-5

SCALE: 1"=50'

REVISED BY	DATE REVISED

CALCULATED-DESIGNED BY	CHECKED BY
JOHNNY REYES	KHALID DAHIR

FUNCTIONAL SUPERVISOR: ARTHUR RAMIREZ

STATE OF CALIFORNIA - DEPARTMENT OF TRANSPORTATION
Caltrans
06-DESIGN

LAST REVISION 08-25-09 | DATE PLOTTED => 05-NOV-2009 | TIME PLOTTED => 11:33

Dist	COUNTY	ROUTE	POST MILES TOTAL PROJECT	SHEET No.	TOTAL SHEETS
05	Mon	101	R12.6/R15.5	11	42

Khalid A Dahir 8-25-09
REGISTERED CIVIL ENGINEER DATE

11-2-09
PLANS APPROVAL DATE

REGISTERED PROFESSIONAL ENGINEER
KHALID A. DAHIR
No. 70240
Exp 9/30/10
CIVIL
STATE OF CALIFORNIA

THE STATE OF CALIFORNIA OR ITS OFFICERS OR AGENTS SHALL NOT BE RESPONSIBLE FOR THE ACCURACY OR COMPLETENESS OF SCANNED COPIES OF THIS PLAN SHEET.

NOTE: FOR ACCURATE RIGHT OF WAY AND ACCESS DATA, CONTACT RIGHT OF WAY ENGINEERING AT THE DISTRICT OFFICE.

CURVE DATA

No.	R	Δ	T	L
2	3068.50′	27°38′06″	754.69′	1480.00′

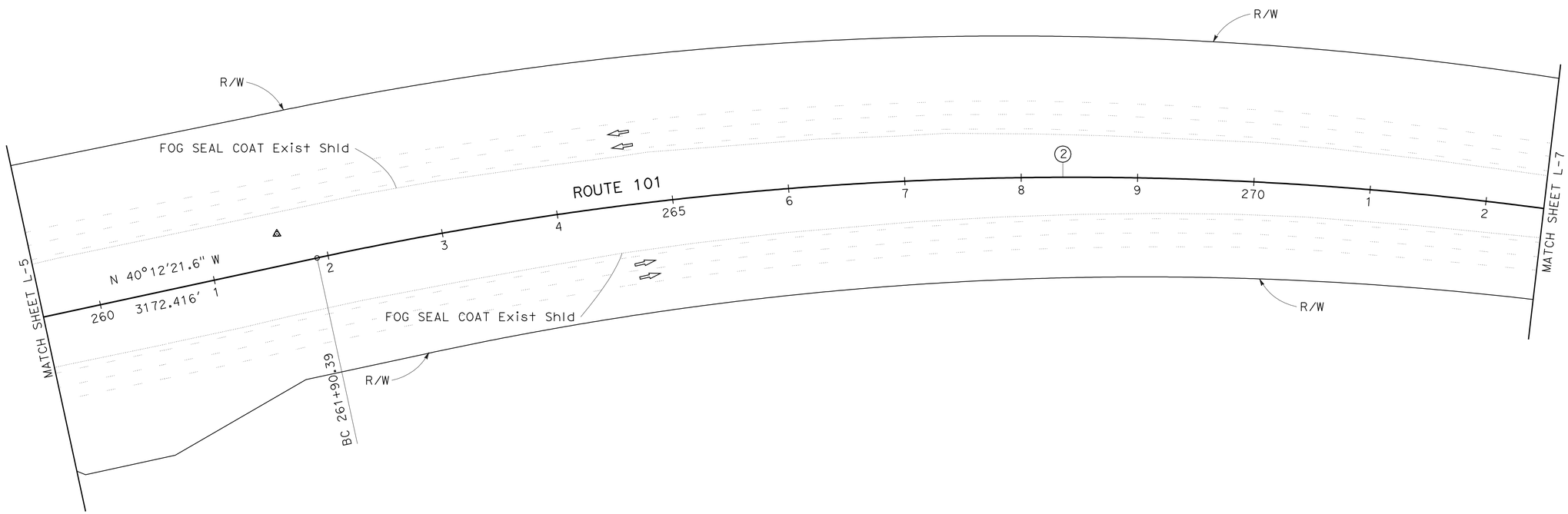

SCALE: 1″=50′

LAYOUT
L-6

REVISED BY	DATE REVISED

CALCULATED-DESIGNED BY	CHECKED BY
JOHNNY REYES	KHALID DAHIR

FUNCTIONAL SUPERVISOR: ARTHUR RAMIREZ

STATE OF CALIFORNIA - DEPARTMENT OF TRANSPORTATION
Caltrans®
06-DESIGN

LAST REVISION 08-19-09
DATE PLOTTED => 05-NOV-2009
TIME PLOTTED => 11:34

Dist	COUNTY	ROUTE	POST MILES TOTAL PROJECT	SHEET No.	TOTAL SHEETS
05	Mon	101	R12.6/R15.5	12	42

REGISTERED CIVIL ENGINEER 8-25-09 DATE

11-2-09
PLANS APPROVAL DATE

REGISTERED PROFESSIONAL ENGINEER KHALID A. DAHIR No. 70240 Exp. 9/30/10 CIVIL STATE OF CALIFORNIA

THE STATE OF CALIFORNIA OR ITS OFFICERS OR AGENTS SHALL NOT BE RESPONSIBLE FOR THE ACCURACY OR COMPLETENESS OF SCANNED COPIES OF THIS PLAN SHEET.

NOTE: FOR ACCURATE RIGHT OF WAY AND ACCESS DATA, CONTACT RIGHT OF WAY ENGINEERING AT THE DISTRICT OFFICE.

CURVE DATA

No.	R	Δ	T	L
2	3068.50′	27°38′06″	754.69′	1480.00′

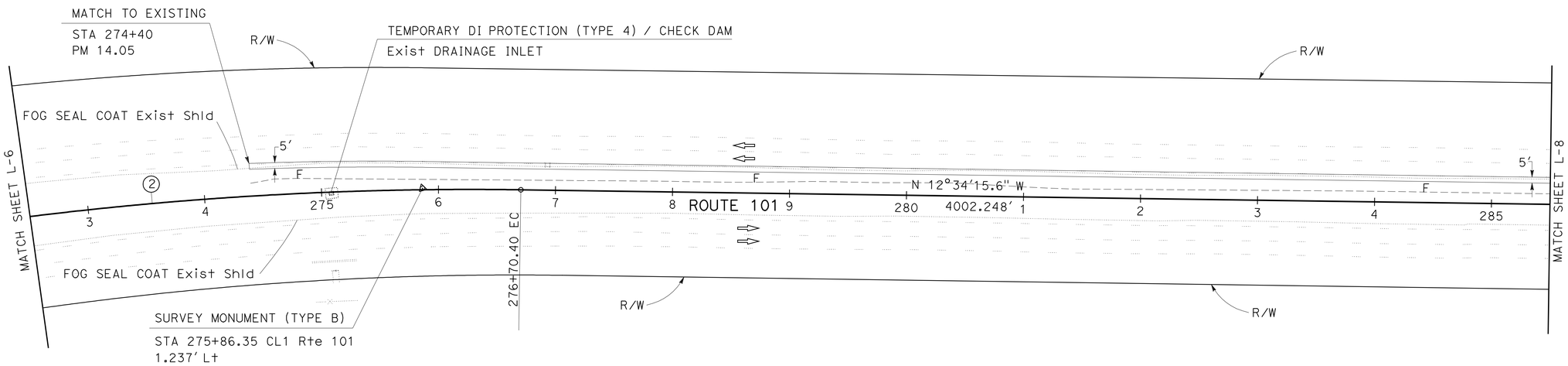

LAYOUT L-7

SCALE: 1"=50′

STATE OF CALIFORNIA - DEPARTMENT OF TRANSPORTATION
Caltrans
06-DESIGN

FUNCTIONAL SUPERVISOR: ARTHUR RAMIREZ
CALCULATED-DESIGNED BY: JOHNNY REYES
CHECKED BY: KHALID DAHIR
REVISED BY
DATE REVISED

LAST REVISION 08-25-09
DATE PLOTTED => 05-NOV-2009
TIME PLOTTED => 11:34

Dist	COUNTY	ROUTE	POST MILES TOTAL PROJECT	SHEET No.	TOTAL SHEETS
05	Mon	101	R12.6/R15.5	13	42

Khalid A Dahir 8-25-09
REGISTERED CIVIL ENGINEER DATE

11-2-09
PLANS APPROVAL DATE

REGISTERED PROFESSIONAL ENGINEER KHALID A. DAHIR No. 70240 Exp. 9/30/10 CIVIL STATE OF CALIFORNIA

THE STATE OF CALIFORNIA OR ITS OFFICERS OR AGENTS SHALL NOT BE RESPONSIBLE FOR THE ACCURACY OR COMPLETENESS OF SCANNED COPIES OF THIS PLAN SHEET.

NOTE: FOR ACCURATE RIGHT OF WAY AND ACCESS DATA,
CONTACT RIGHT OF WAY ENGINEERING AT THE DISTRICT OFFICE.

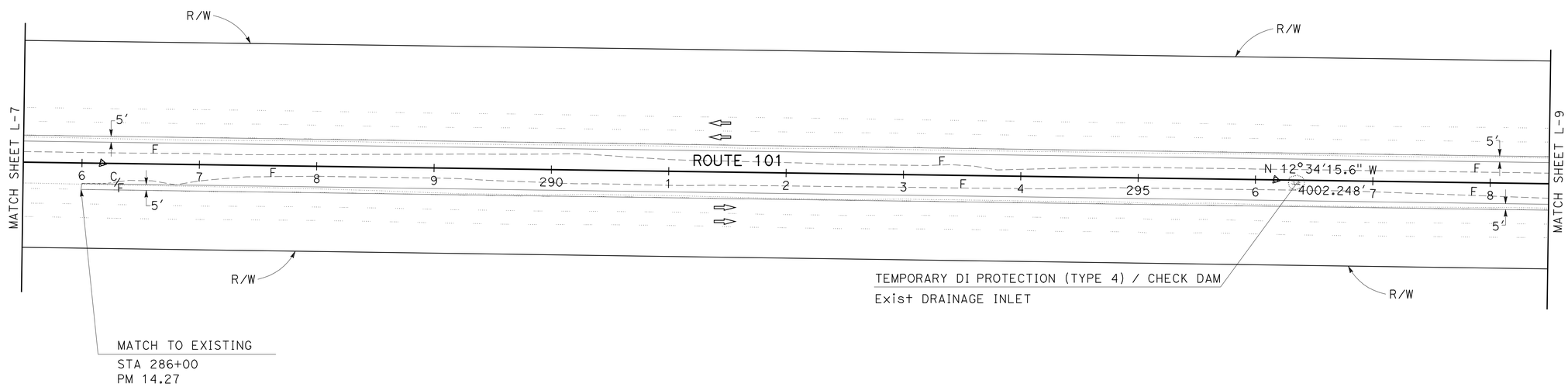

LAYOUT
L-8

SCALE: 1"=50'

STATE OF CALIFORNIA - DEPARTMENT OF TRANSPORTATION
Caltrans®
06-DESIGN

FUNCTIONAL SUPERVISOR: ARTHUR RAMIREZ
CALCULATED-DESIGNED BY: JOHNNY REYES
CHECKED BY: KHALID DAHIR
REVISED BY
DATE REVISED

LAST REVISION 08-25-09
DATE PLOTTED => 05-NOV-2009
TIME PLOTTED => 11:34

Dist	COUNTY	ROUTE	POST MILES TOTAL PROJECT	SHEET No.	TOTAL SHEETS
05	Mon	101	R12.6/R15.5	14	42

Khalid A Dahir 8-25-09
REGISTERED CIVIL ENGINEER DATE

11-2-09
PLANS APPROVAL DATE

REGISTERED PROFESSIONAL ENGINEER
KHALID A. DAHIR
No. 70240
Exp 9/30/10
CIVIL
STATE OF CALIFORNIA

THE STATE OF CALIFORNIA OR ITS OFFICERS OR AGENTS SHALL NOT BE RESPONSIBLE FOR THE ACCURACY OR COMPLETENESS OF SCANNED COPIES OF THIS PLAN SHEET.

NOTE: FOR ACCURATE RIGHT OF WAY AND ACCESS DATA,
CONTACT RIGHT OF WAY ENGINEERING AT THE DISTRICT OFFICE.

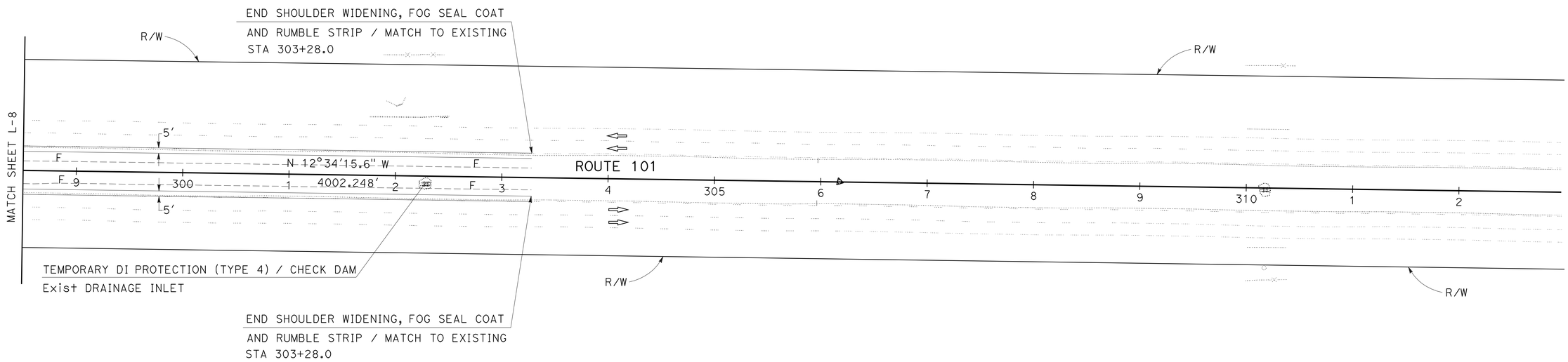

LAYOUT
L-9

SCALE: 1"=50'

STATE OF CALIFORNIA - DEPARTMENT OF TRANSPORTATION
Caltrans
06-DESIGN

FUNCTIONAL SUPERVISOR: ARTHUR RAMIREZ
CALCULATED-DESIGNED BY: JOHNNY REYES
CHECKED BY: KHALID DAHIR
REVISED BY
DATE REVISED

LAST REVISION 08-25-09
DATE PLOTTED => 05-NOV-2009
TIME PLOTTED => 11:34

Dist	COUNTY	ROUTE	POST MILES TOTAL PROJECT	SHEET No.	TOTAL SHEETS
05	Mon	101	R12.6/R15.5	15	42

Khalid A Dahir 8-25-09
REGISTERED CIVIL ENGINEER DATE

11-2-09
PLANS APPROVAL DATE

REGISTERED PROFESSIONAL ENGINEER
KHALID A. DAHIR
No. 70240
Exp. 9/30/10
CIVIL
STATE OF CALIFORNIA

THE STATE OF CALIFORNIA OR ITS OFFICERS OR AGENTS SHALL NOT BE RESPONSIBLE FOR THE ACCURACY OR COMPLETENESS OF SCANNED COPIES OF THIS PLAN SHEET.

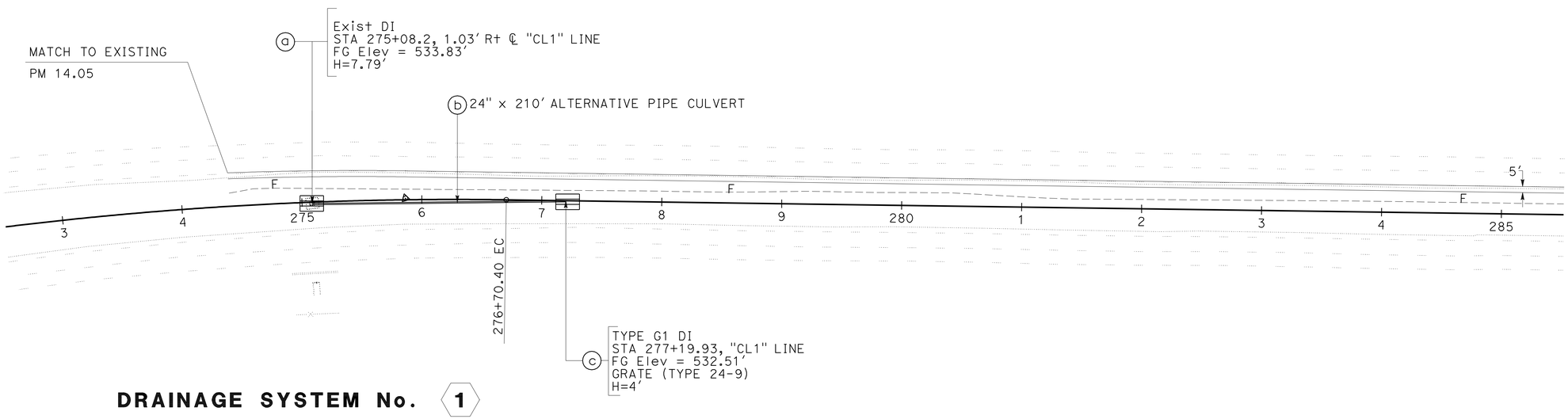

DRAINAGE SYSTEM No. 1

THIS PLAN ACCURATE FOR DRAINAGE WORK ONLY.

SCALE: 1"=50'

DRAINAGE PLAN

D-1

REVISED BY	DATE REVISED

CALCULATED-DESIGNED BY	CHECKED BY
JOHNNY REYES	KHALID DAHIR

FUNCTIONAL SUPERVISOR: ARTHUR RAMIREZ

STATE OF CALIFORNIA - DEPARTMENT OF TRANSPORTATION
Caltrans
06-DESIGN

LAST REVISION 08-25-09
DATE PLOTTED => 05-NOV-2009
TIME PLOTTED => 11:34

Dist	COUNTY	ROUTE	POST MILES TOTAL PROJECT	SHEET No.	TOTAL SHEETS
05	Mon	101	R12.6/R15.5	16	42

REGISTERED CIVIL ENGINEER 8-25-09 DATE

11-2-09
PLANS APPROVAL DATE

REGISTERED PROFESSIONAL ENGINEER KHALID A. DAHIR No. 70240 Exp. 9/30/10 CIVIL STATE OF CALIFORNIA

THE STATE OF CALIFORNIA OR ITS OFFICERS OR AGENTS SHALL NOT BE RESPONSIBLE FOR THE ACCURACY OR COMPLETENESS OF SCANNED COPIES OF THIS PLAN SHEET.

ABBREVIATION

S = SLOPE

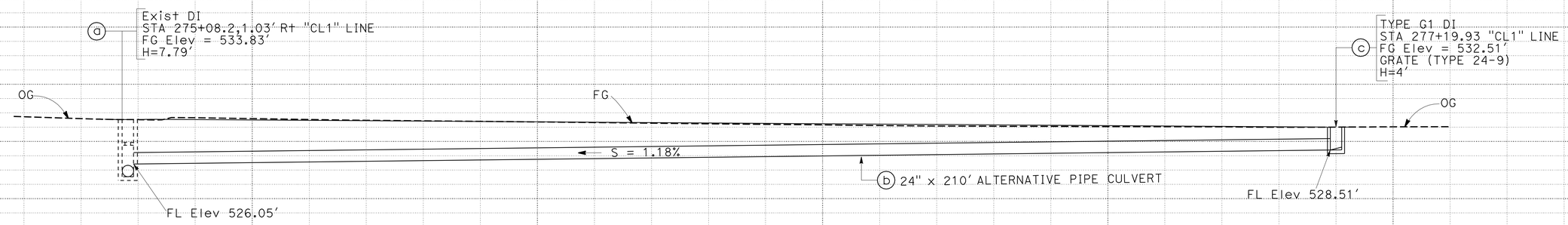

DRAINAGE SYSTEM No. 1

DRAINAGE PROFILES

SCALE: Horiz 1"=10'
Vert 1"=10'

DP-1

STATION	274+80	275+20	275+60	276+00	276+40	276+80	277+20	277+60	TOTAL
CY Exc									
CY Emb									

STATE OF CALIFORNIA - DEPARTMENT OF TRANSPORTATION
Caltrans 06-DESIGN

FUNCTIONAL SUPERVISOR: ARTHUR RAMIREZ
CALCULATED-DESIGNED BY: JOHNNY REYES
CHECKED BY: KHALID DAHIR
REVISED BY
DATE REVISED

LAST REVISION 08-25-09
DATE PLOTTED => 05-NOV-2009
TIME PLOTTED => 11:34

Dist	COUNTY	ROUTE	POST MILES TOTAL PROJECT	SHEET No.	TOTAL SHEETS
05	Mon	101	R12.6/R15.5	17	42

REGISTERED CIVIL ENGINEER 8-25-09 DATE

11-2-09
PLANS APPROVAL DATE

REGISTERED PROFESSIONAL ENGINEER KHALID A. DAHIR No. 70240 Exp. 9/30/10 CIVIL STATE OF CALIFORNIA

THE STATE OF CALIFORNIA OR ITS OFFICERS OR AGENTS SHALL NOT BE RESPONSIBLE FOR THE ACCURACY OR COMPLETENESS OF SCANNED COPIES OF THIS PLAN SHEET.

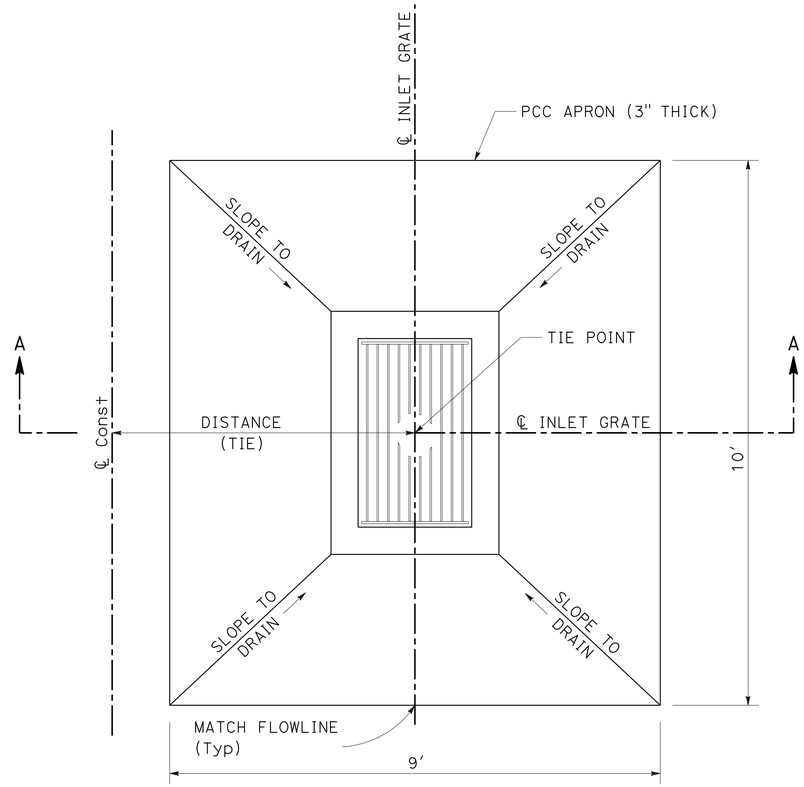

MEDIAN INLET IN DIRT AREAS WITH CONCRETE APRON

TYPICAL APRON TIE POINTS

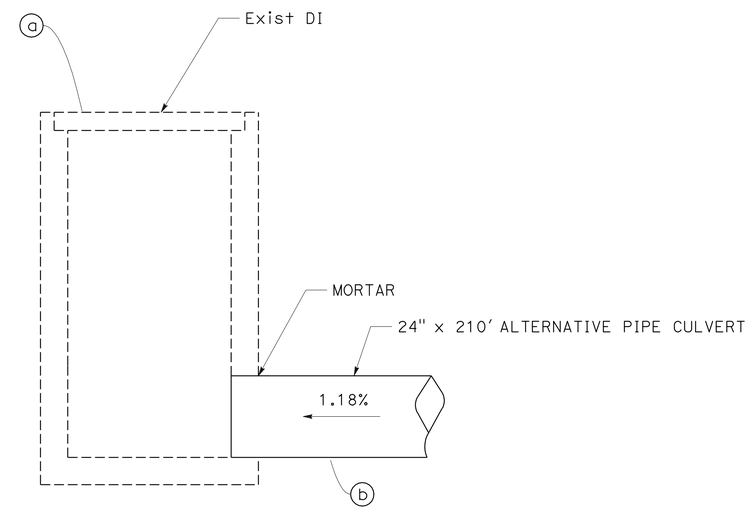

DRAINAGE SYSTEM No. 1 a,b

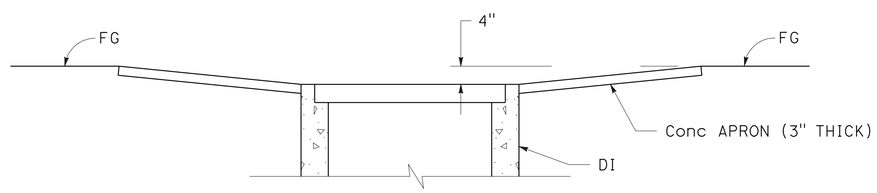

SECTION A-A

DEPRESSED DRAINAGE INLET WITH CONCRETE APRON

Sta 277+19.93
Sta 275+08

THIS PLAN ACCURATE FOR DRAINAGE WORK ONLY.

DRAINAGE DETAILS DD-1

REVISED BY	DATE REVISED

CALCULATED-DESIGNED BY: JOHNNY REYES
CHECKED BY: KHALID DAHIR
FUNCTIONAL SUPERVISOR: ARTHUR RAMIREZ

STATE OF CALIFORNIA - DEPARTMENT OF TRANSPORTATION
Caltrans
06-DESIGN

LAST REVISION 08-25-09 | DATE PLOTTED => 05-NOV-2009 | TIME PLOTTED => 11:34

Dist	COUNTY	ROUTE	POST MILES TOTAL PROJECT	SHEET No.	TOTAL SHEETS
05	Mon	101	R12.6/R15.5	18	42

REGISTERED CIVIL ENGINEER 8-25-09 DATE

11-2-09
PLANS APPROVAL DATE

REGISTERED PROFESSIONAL ENGINEER KHALID A. DAHIR No. 70240 Exp 9/30/10 CIVIL STATE OF CALIFORNIA

THE STATE OF CALIFORNIA OR ITS OFFICERS OR AGENTS SHALL NOT BE RESPONSIBLE FOR THE ACCURACY OR COMPLETENESS OF SCANNED COPIES OF THIS PLAN SHEET.

ALTERNATIVE PIPE CULVERT

SIZE	TYPE	DESCRIPTION
24"	18 GAGE	GALVANIZED CSP WITH POLYMERIC COATING
24"	12 GAGE	ALUMINUM PIPE
24"	14 GAGE	GALVANIZED CSP WITH BITUMINOUS COATING
24"	12 GAGE	GALVANIZED CSP
24"		PLASTIC PIPE
24"		REINFORCED CONCRETE PIPE(RCP)

ABBREVIATIONS:

WTJ - WATER TIGHT JOINT

DRAINAGE QUANTITIES

DRAINAGE PLAN SHEET No.	DRAINAGE SYSTEM No.	DRAINAGE UNIT	DRAINAGE INLET: MINOR CONCRETE (MINOR STRUCTURE)	DRAINAGE INLET: FRAME AND GRATE (TYPE 24-9) (N)	DRAINAGE INLET: Misc IRON AND STEEL	DRAINAGE INLET: HEIGHT OF INLET (H) (N)	24" ALTERNATIVE PIPE CULVERT	MORTAR (N)	PIPE JOINT CLASSIFICATION	DESCRIPTION	STATION	DRAINAGE UNIT No.	DRAINAGE SYSTEM No.	DRAINAGE PLAN SHEET No.
			CY	EA	LB	LF	LF	EA						
D-1	1	a				7.79		1		Exist DRAINAGE INLET	275+08.2	a	1	D-1
		b					210		WTJ	ALTERNATIVE PIPE CULVERT		b		
		c	1.2	1	263	4		1		DRAINAGE INLET(TYPE G1 DI)	277+19.93	c		
			2.0							CONCRETE APRON	277+19.93, 275+08			
TOTAL			3.2	1	263		210	2						

(N) NOT A SEPARATE PAY ITEM, FOR INFORMATION ONLY.

DRAINAGE QUANTITIES
DQ-1

STATE OF CALIFORNIA - DEPARTMENT OF TRANSPORTATION
Caltrans® 06-DESIGN

FUNCTIONAL SUPERVISOR: ARTHUR RAMIREZ
CALCULATED-DESIGNED BY: JOHNNY REYES
CHECKED BY: KHALID DAHIR
REVISED BY
DATE REVISED

LAST REVISION 08-19-09
DATE PLOTTED => 05-NOV-2009
TIME PLOTTED => 11:35

Dist	COUNTY	ROUTE	POST MILES TOTAL PROJECT	SHEET No.	TOTAL SHEETS
05	Mon	101	R12.6/R15.5	19	42

Khalid A Dahir 8-25-09
REGISTERED CIVIL ENGINEER DATE

11-2-09
PLANS APPROVAL DATE

REGISTERED PROFESSIONAL ENGINEER KHALID A. DAHIR No. 70240 Exp. 9/30/10 CIVIL STATE OF CALIFORNIA

THE STATE OF CALIFORNIA OR ITS OFFICERS OR AGENTS SHALL NOT BE RESPONSIBLE FOR THE ACCURACY OR COMPLETENESS OF SCANNED COPIES OF THIS PLAN SHEET.

POTHOLE INFORMATION

#	STATION	UTILITY	NORTHING	EASTING	ELEVATION OF UTILITY (FT)	OFFSET FROM CL1	REMARKS
1	289+23.01	WATER	1,863,634.44	6,007,815.17	537.22	9.53′ R+	3.42′ FROM OG TO TOP OF WATER LINE
2	289+22.27	WATER	1,863,629.12	6,007,794.67	536.96	11.64′ L+	4.83′ FROM OG TO TOP OF WATER LINE

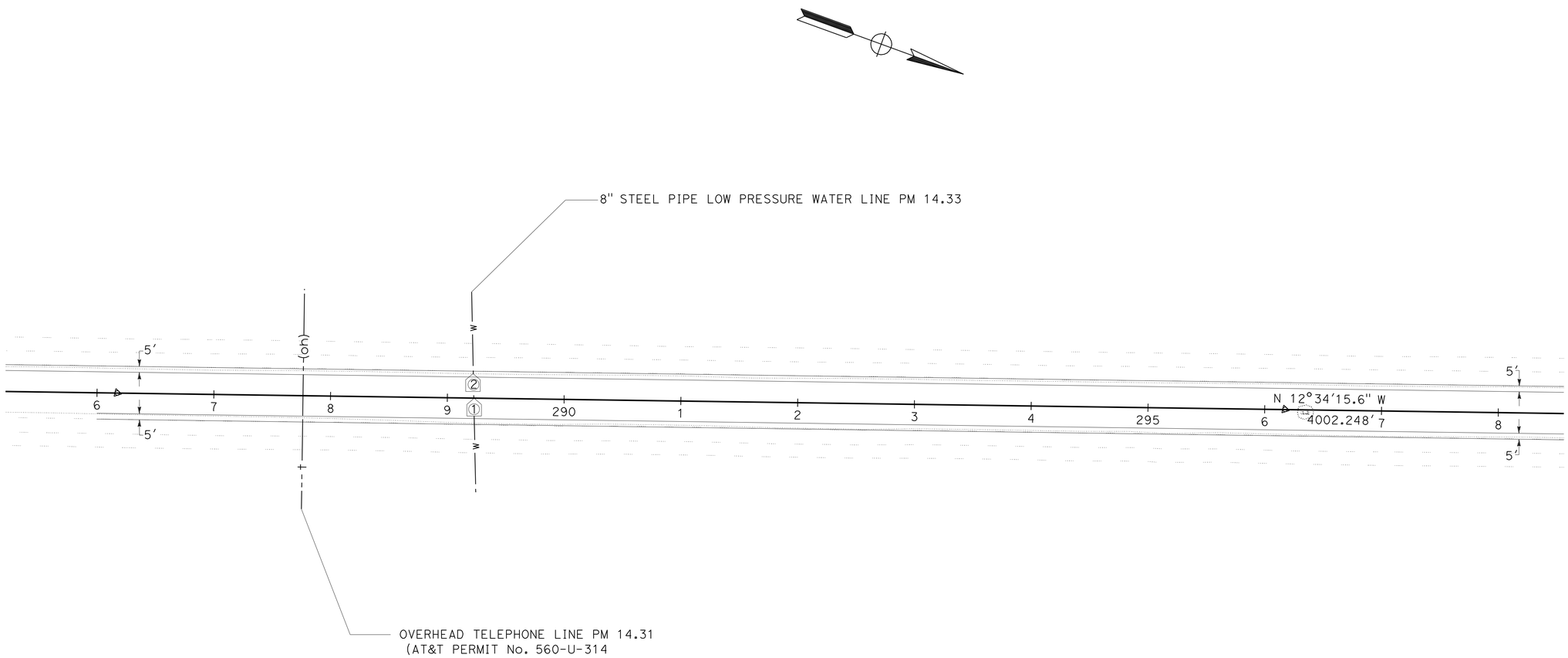

THIS PLAN ACCURATE FOR UTILITY WORK ONLY.

SCALE: 1"=50′

UTILITY
U-1

STATE OF CALIFORNIA - DEPARTMENT OF TRANSPORTATION
Caltrans
06-DESIGN

FUNCTIONAL SUPERVISOR: ARTHUR RAMIREZ
CALCULATED-DESIGNED BY: JOHNNY REYES
CHECKED BY: KHALID DAHIR
REVISED BY
DATE REVISED

LAST REVISION 08-25-09
DATE PLOTTED => 05-NOV-2009
TIME PLOTTED => 11:35

Dist	COUNTY	ROUTE	POST MILES TOTAL PROJECT	SHEET No.	TOTAL SHEETS
05	Mon	101	R12.6/R15.5	20	42

REGISTERED ~~CIVIL~~ ENGINEER 8/26/09 DATE

11-2-09
PLANS APPROVAL DATE

REGISTERED PROFESSIONAL ENGINEER HUE NGUYEN No. 74484 Exp. 12/31/09 CIVIL STATE OF CALIFORNIA

THE STATE OF CALIFORNIA OR ITS OFFICERS OR AGENTS SHALL NOT BE RESPONSIBLE FOR THE ACCURACY OR COMPLETENESS OF SCANNED COPIES OF THIS PLAN SHEET.

NOTE:

LOCATIONS OF CONSTRUCTION AREA SIGNS SHOWN ARE APPROXIMATE, EXACT SIGN LOCATIONS TO BE DETERMINED BY THE ENGINEER.

STATIONARY MOUNTED CONSTRUCTION AREA SIGNS

SIGN No.	SIGN CODE	No. OF SIGNS	PANEL SIZE	No. OF POST AND SIZE	SIGN MESSAGE
A	W20-1	4	60" x 60"	2 - 6" x 6"	ROAD WORK AHEAD
B	G20-2	4	36" x 18"	1 - 4" x 4"	END ROAD WORK
C	W20-1	1	36" x 36"	1 - 4" x 6"	ROAD WORK AHEAD

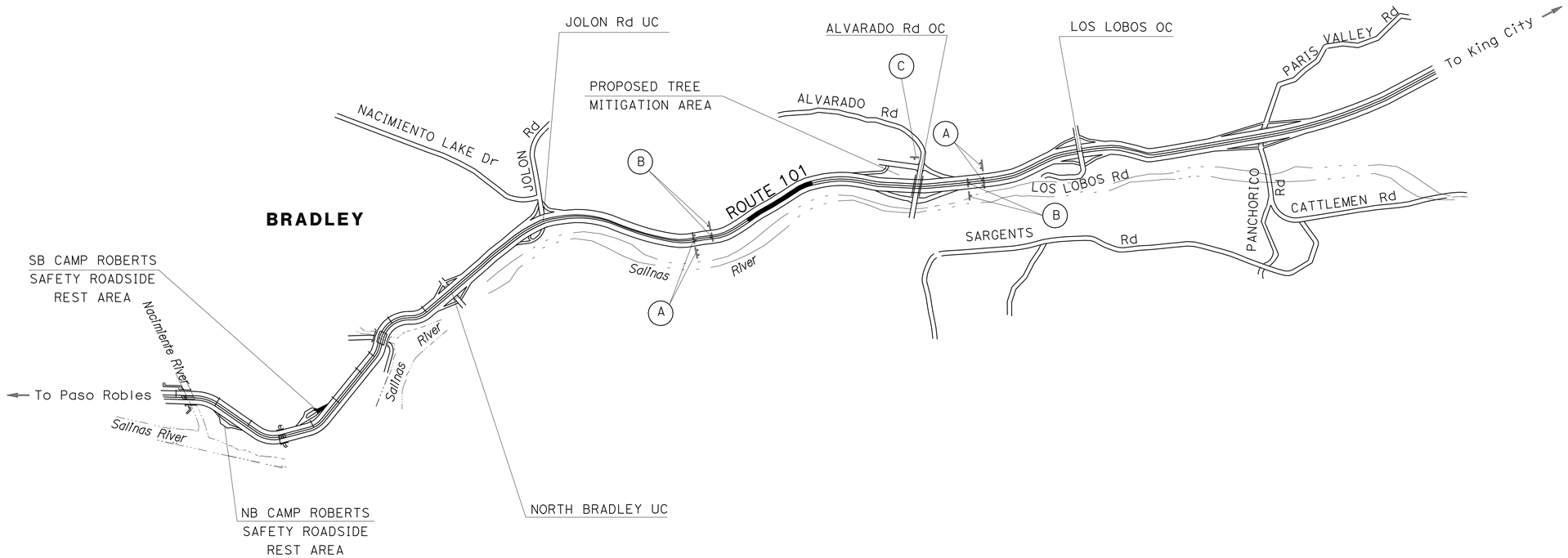

THIS PLAN ACCURATE FOR CONSTRUCTION AREA SIGNS ONLY

CONSTRUCTION AREA SIGNS
CS-1

NO SCALE

STATE OF CALIFORNIA - DEPARTMENT OF TRANSPORTATION
Caltrans TRAFFIC DESIGN

FUNCTIONAL SUPERVISOR: MOHAMMED QATAMI
CALCULATED-DESIGNED BY: QUAN H. TRINH
CHECKED BY: HUE NGUYEN
REVISED BY: QT
DATE REVISED: 09-21-09

LAST REVISION DATE PLOTTED => 05-NOV-2009
08-12-09 TIME PLOTTED => 11:35

Dist	COUNTY	ROUTE	POST MILES TOTAL PROJECT	SHEET No.	TOTAL SHEETS
05	Mon	101	R12.6/R15.5	21	42

REGISTERED CIVIL ENGINEER 8/26/09 DATE

11-2-09
PLANS APPROVAL DATE

REGISTERED PROFESSIONAL ENGINEER HUE NGUYEN No. 74484 Exp. 12/31/09 CIVIL STATE OF CALIFORNIA

THE STATE OF CALIFORNIA OR ITS OFFICERS OR AGENTS SHALL NOT BE RESPONSIBLE FOR THE ACCURACY OR COMPLETENESS OF SCANNED COPIES OF THIS PLAN SHEET.

NOTES:

FOR ACCURATE RIGHT OF WAY AND ACCESS DATA,
CONTACT RIGHT OF WAY ENGINEERING AT THE DISTRICT OFFICE.

LEGEND:

- THERMOPLASTIC TRAFFIC STRIPE (SPRAYABLE) DETAIL No.
- I_L OBJECT MARKER, CA TYPE L-1(OM2-1V)
- I_G DELINEATOR, CLASS 1(TYPE G)
- I_{GG} GUARD RAILING DELINEATOR (TYPE G)
- DIRECTION OF TRAFFIC

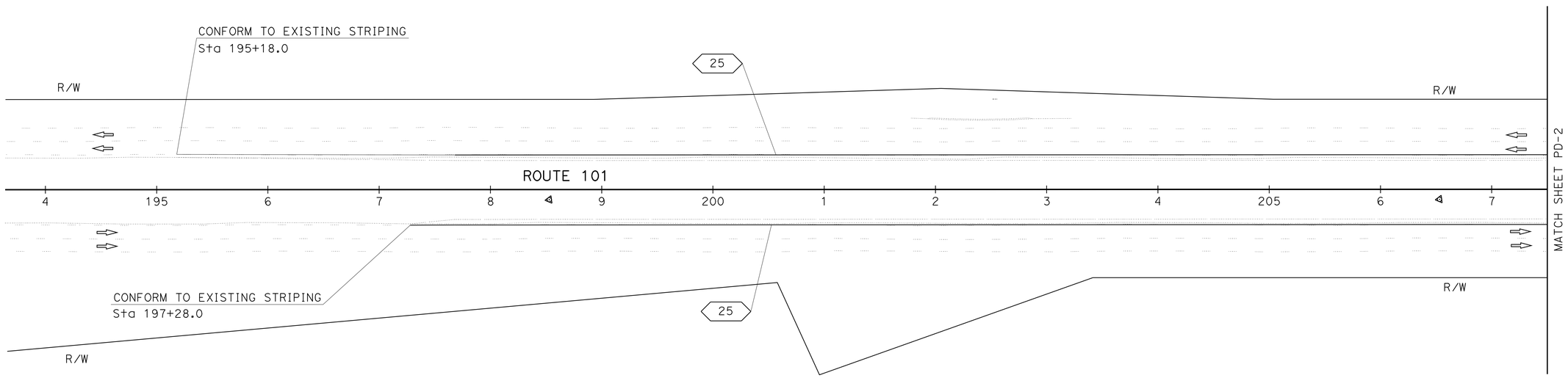

THIS PLAN ACCURATE FOR PAVEMENT DELINEATION WORK ONLY

PAVEMENT DELINEATION PLAN

SCALE: 1"=50'

PD-1

QUAN H. TRINH	REVISED BY: QT
HUE NGUYEN	DATE REVISED: 09-16-09
CALCULATED-DESIGNED BY	
CHECKED BY	
FUNCTIONAL SUPERVISOR	MOHAMMED QATAMI

STATE OF CALIFORNIA - DEPARTMENT OF TRANSPORTATION
Caltrans
TRAFFIC DESIGN

LAST REVISION 10-14-09 DATE PLOTTED => 05-NOV-2009 TIME PLOTTED => 11:35

Dist	COUNTY	ROUTE	POST MILES TOTAL PROJECT	SHEET No.	TOTAL SHEETS
05	Mon	101	R12.6/R15.5	22	42

REGISTERED CIVIL ENGINEER 8/26/09 DATE

11-2-09
PLANS APPROVAL DATE

REGISTERED PROFESSIONAL ENGINEER HUE NGUYEN No. 74484 Exp. 12/31/09 CIVIL STATE OF CALIFORNIA

THE STATE OF CALIFORNIA OR ITS OFFICERS OR AGENTS SHALL NOT BE RESPONSIBLE FOR THE ACCURACY OR COMPLETENESS OF SCANNED COPIES OF THIS PLAN SHEET.

NOTE:

FOR ACCURATE RIGHT OF WAY AND ACCESS DATA,
CONTACT RIGHT OF WAY ENGINEERING AT THE DISTRICT OFFICE.

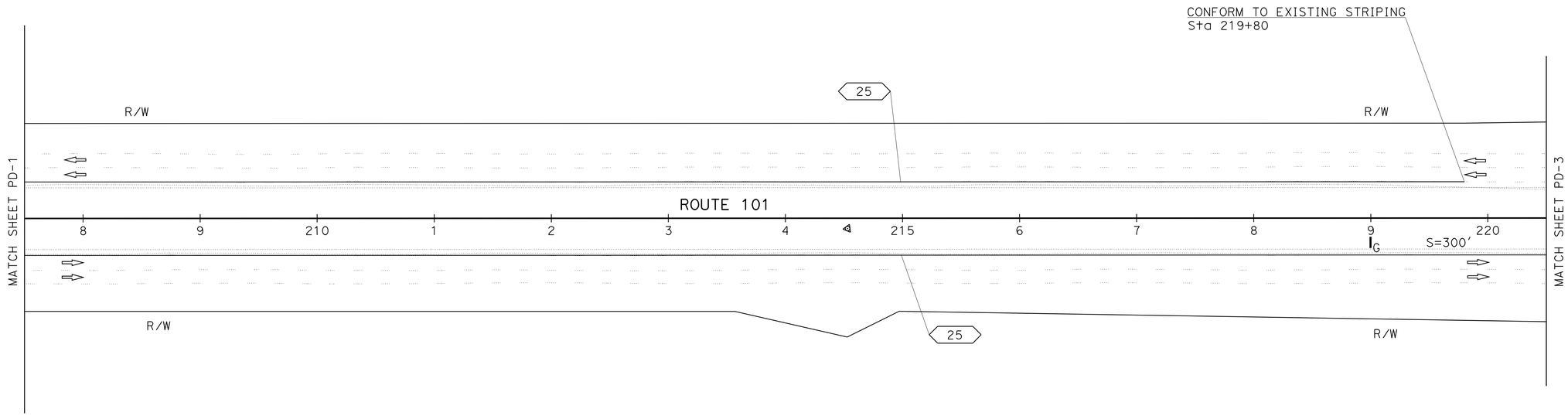

THIS PLAN ACCURATE FOR PAVEMENT DELINEATION WORK ONLY

PAVEMENT DELINEATION PLAN

SCALE: 1"= 50'

PD-2

QUAN H. TRINH	CALCULATED-DESIGNED BY
HUE NGUYEN	CHECKED BY
QT	REVISED BY
09-16-09	DATE REVISED
MOHAMMED QATAMI	FUNCTIONAL SUPERVISOR

STATE OF CALIFORNIA - DEPARTMENT OF TRANSPORTATION
Caltrans
TRAFFIC DESIGN

LAST REVISION 09-16-09 DATE PLOTTED => 05-NOV-2009 TIME PLOTTED => 11:35

Dist	COUNTY	ROUTE	POST MILES TOTAL PROJECT	SHEET No.	TOTAL SHEETS
05	Mon	101	R12.6/R15.5	23	42

REGISTERED CIVIL ENGINEER 8/26/09 DATE

11-2-09
PLANS APPROVAL DATE

REGISTERED PROFESSIONAL ENGINEER
HUE NGUYEN
No. 74484
Exp. 12/31/09
CIVIL
STATE OF CALIFORNIA

THE STATE OF CALIFORNIA OR ITS OFFICERS OR AGENTS SHALL NOT BE RESPONSIBLE FOR THE ACCURACY OR COMPLETENESS OF SCANNED COPIES OF THIS PLAN SHEET.

NOTE: FOR ACCURATE RIGHT OF WAY AND ACCESS DATA, CONTACT RIGHT OF WAY ENGINEERING AT THE DISTRICT OFFICE.

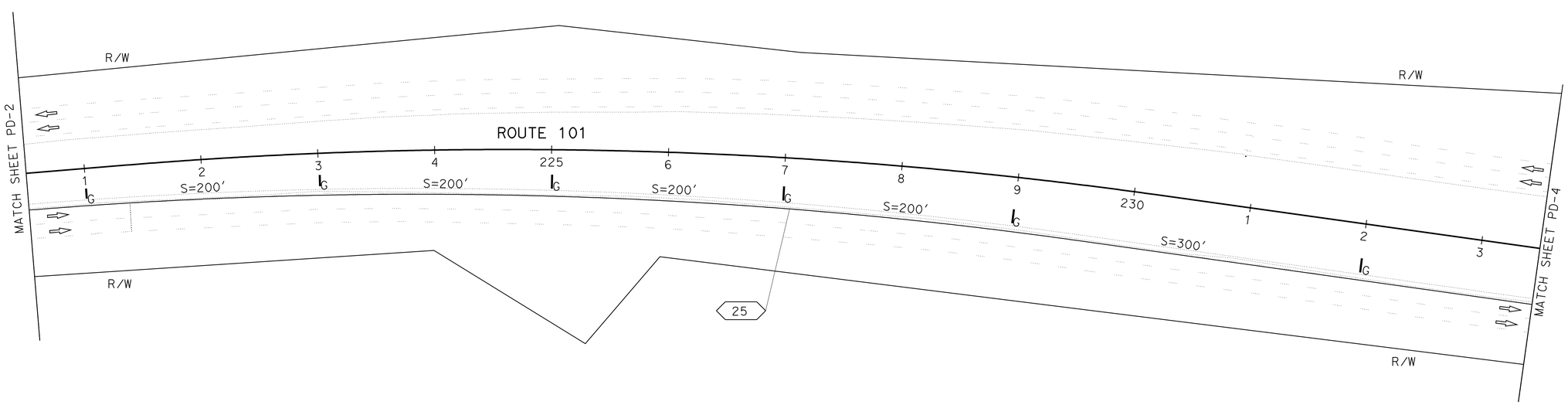

THIS PLAN ACCURATE FOR PAVEMENT DELINEATION WORK ONLY

PAVEMENT DELINEATION PLAN

SCALE: 1" = 50′

PD-3

QUAN H. TRINH	QT
HUE NGUYEN	09-16-09
MOHAMMED QATAMI	

REVISED BY / DATE REVISED

CALCULATED-DESIGNED BY / CHECKED BY

FUNCTIONAL SUPERVISOR

STATE OF CALIFORNIA - DEPARTMENT OF TRANSPORTATION

Caltrans

TRAFFIC DESIGN

LAST REVISION 09-16-09 | DATE PLOTTED => 05-NOV-2009 | TIME PLOTTED => 11:35

Dist	COUNTY	ROUTE	POST MILES TOTAL PROJECT	SHEET No.	TOTAL SHEETS
05	Mon	101	R12.6/R15.5	24	42

REGISTERED CIVIL ENGINEER DATE

11-2-09
PLANS APPROVAL DATE

REGISTERED PROFESSIONAL ENGINEER
HUE NGUYEN
No. 74484
Exp. 12/31/09
CIVIL
STATE OF CALIFORNIA

THE STATE OF CALIFORNIA OR ITS OFFICERS OR AGENTS SHALL NOT BE RESPONSIBLE FOR THE ACCURACY OR COMPLETENESS OF SCANNED COPIES OF THIS PLAN SHEET.

NOTE: FOR ACCURATE RIGHT OF WAY AND ACCESS DATA, CONTACT RIGHT OF WAY ENGINEERING AT THE DISTRICT OFFICE.

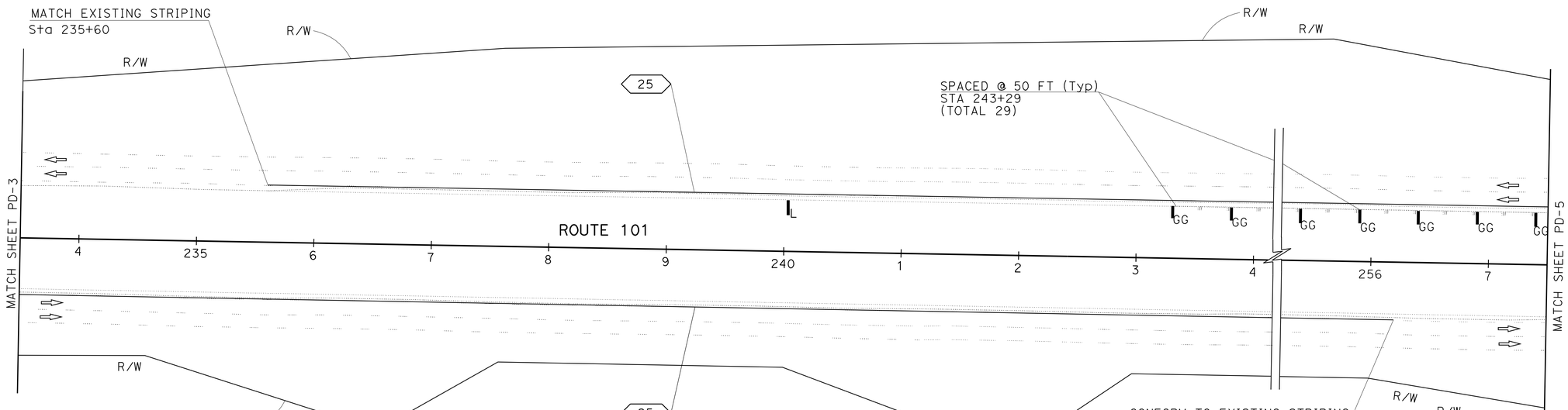

THIS PLAN ACCURATE FOR PAVEMENT DELINEATION WORK ONLY

PAVEMENT DELINEATION PLAN

SCALE: 1" = 50'

PD-4

STATE OF CALIFORNIA - DEPARTMENT OF TRANSPORTATION
Caltrans
TRAFFIC DESIGN

FUNCTIONAL SUPERVISOR: MOHAMMED QATAMI
CALCULATED-DESIGNED BY: QUAN H. TRINH
CHECKED BY: HUE NGUYEN
REVISED BY: QT
DATE REVISED: 09-21-09

LAST REVISION 09-21-09 | DATE PLOTTED => 05-NOV-2009 | TIME PLOTTED => 11:35

BORDER LAST REVISED 4/11/2008 | RELATIVE BORDER SCALE IS IN INCHES 0 1 2 3 | USERNAME => trstrk | DGN FILE => 500200na004.dgn | CU 06385 | EA 0Q2001

Dist	COUNTY	ROUTE	POST MILES TOTAL PROJECT	SHEET No.	TOTAL SHEETS
05	Mon	101	R12.6/R15.5	25	42

REGISTERED ~~CIVIL~~ ENGINEER 8/26/09 DATE

11-2-09
PLANS APPROVAL DATE

REGISTERED PROFESSIONAL ENGINEER
HUE NGUYEN
No. 74484
Exp 12/31/09
CIVIL
STATE OF CALIFORNIA

THE STATE OF CALIFORNIA OR ITS OFFICERS OR AGENTS SHALL NOT BE RESPONSIBLE FOR THE ACCURACY OR COMPLETENESS OF SCANNED COPIES OF THIS PLAN SHEET.

NOTE: FOR ACCURATE RIGHT OF WAY AND ACCESS DATA, CONTACT RIGHT OF WAY ENGINEERING AT THE DISTRICT OFFICE.

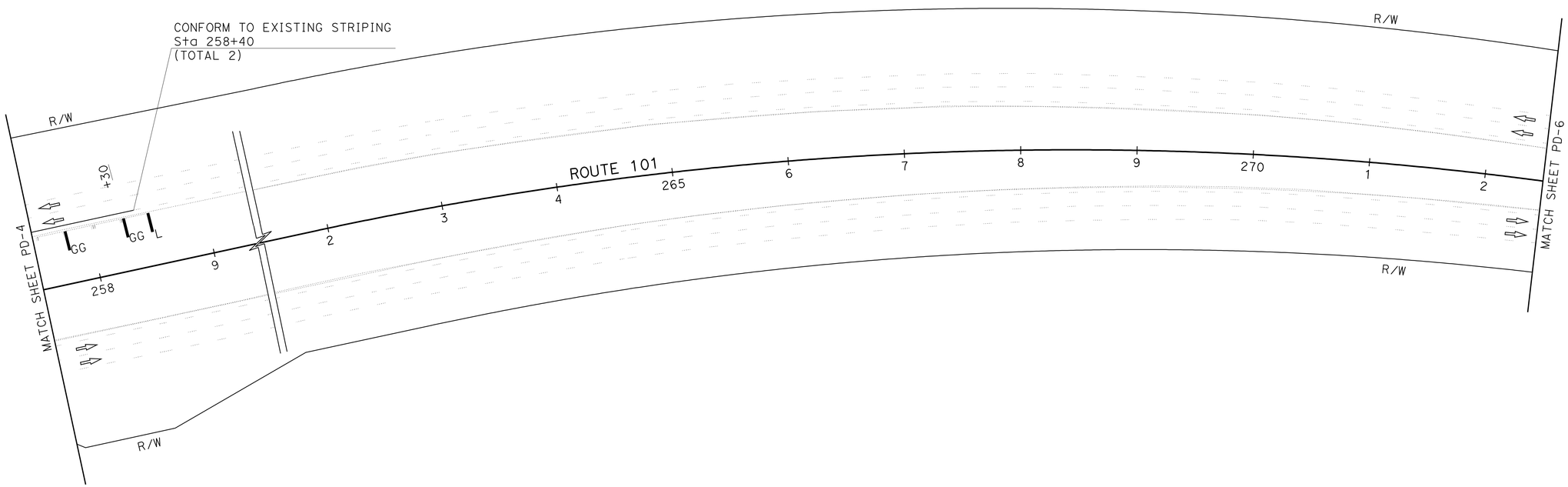

THIS PLAN ACCURATE FOR PAVEMENT DELINEATION WORK ONLY

PAVEMENT DELINEATION PLAN

SCALE: 1" = 50'

PD-5

QUAN H. TRINH	QT
HUE NGUYEN	09-21-09
MOHAMMED QATAMI	

REVISED BY / DATE REVISED

CALCULATED-DESIGNED BY / CHECKED BY

FUNCTIONAL SUPERVISOR

STATE OF CALIFORNIA - DEPARTMENT OF TRANSPORTATION

Caltrans

TRAFFIC DESIGN

LAST REVISION 09-21-09 | DATE PLOTTED => 05-NOV-2009 | TIME PLOTTED => 11:35

Dist	COUNTY	ROUTE	POST MILES TOTAL PROJECT	SHEET No.	TOTAL SHEETS
05	Mon	101	R12.6/R15.5	26	42

REGISTERED ~~CIVIL~~ ENGINEER 8/26/09 DATE

11-2-09
PLANS APPROVAL DATE

REGISTERED PROFESSIONAL ENGINEER
HUE NGUYEN
No. 74484
Exp. 12/31/09
CIVIL
STATE OF CALIFORNIA

THE STATE OF CALIFORNIA OR ITS OFFICERS OR AGENTS SHALL NOT BE RESPONSIBLE FOR THE ACCURACY OR COMPLETENESS OF SCANNED COPIES OF THIS PLAN SHEET.

NOTE: FOR ACCURATE RIGHT OF WAY AND ACCESS DATA, CONTACT RIGHT OF WAY ENGINEERING AT THE DISTRICT OFFICE.

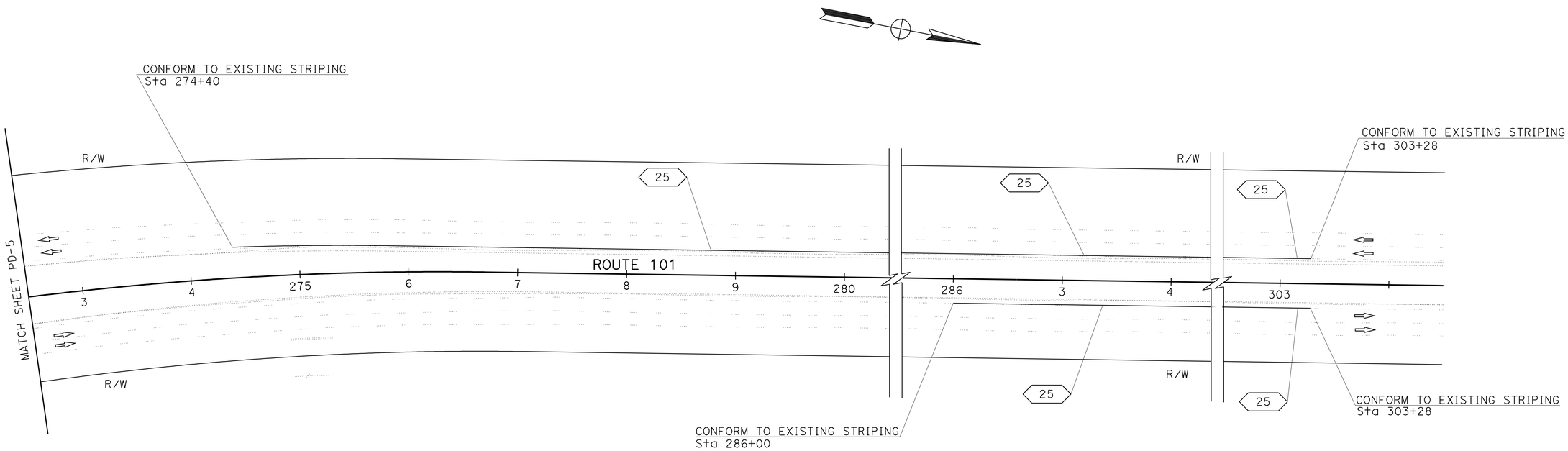

THIS PLAN ACCURATE FOR PAVEMENT DELINEATION WORK ONLY

PAVEMENT DELINEATION PLAN

SCALE: 1" = 50'

PD-6

REVISED BY	DATE REVISED
QT	09-21-09

CALCULATED-DESIGNED BY: QUAN H. TRINH
CHECKED BY: HUE NGUYEN
FUNCTIONAL SUPERVISOR: MOHAMMED QATAMI

STATE OF CALIFORNIA - DEPARTMENT OF TRANSPORTATION
Caltrans
TRAFFIC DESIGN

LAST REVISION 09-21-09 | DATE PLOTTED => 05-NOV-2009 | TIME PLOTTED => 11:36

Dist	COUNTY	ROUTE	POST MILES TOTAL PROJECT	SHEET No.	TOTAL SHEETS
05	Mon	101	R12.6/R15.5	27	42

REGISTERED CIVIL ENGINEER 8/26/09 DATE

11-2-09
PLANS APPROVAL DATE

REGISTERED PROFESSIONAL ENGINEER HUE NGUYEN No. 74484 Exp 12/31/09 CIVIL STATE OF CALIFORNIA

THE STATE OF CALIFORNIA OR ITS OFFICERS OR AGENTS SHALL NOT BE RESPONSIBLE FOR THE ACCURACY OR COMPLETENESS OF ELECTRONIC COPIES OF THIS PLAN SHEET.

PAVEMENT DELINEATION QUANTITIES

STATION LIMIT	THERMOPLASTIC TRAFFIC STRIPE (SPRAYABLE)	PAVEMENT MARKER (RETROREFLECTIVE)	REMOVE PAVEMENT MARKER
	4" SOLID YELLOW Det 25	ONE- WAY YELLOW TYPE H	
	LF	EA	EA
ROUTE 101 (NB) Sta 197+28 - Sta 256+20	5892	124	248
ROUTE 101 (NB) Sta 286+00 - Sta 303+28	1728	37	74
ROUTE 101 (SB) Sta 195+18 - Sta 219+80	2462	53	106
ROUTE 101(SB) Sta 235+60 - Sta 258+40	2280	49	98
ROUTE 101(SB) Sta 274+40 - Sta 303+28	2888	62	124
TOTAL	15250	325	650

OBJECT MARKER AND DELINEATOR

LOCATION	OBJECT MARKER (TYPE L-1)	DELINEATOR CLASS 1(TYPE G)	GUARDRAIL DELINEATOR
	EA	EA	EA
ROUTE 101(NB) (Sta 221+00 - Sta 232+00)		7	
ROUTE 101(SB)	2		
ROUTE 101(SB) (Sta 243+29 - Sta 258+30)			31
TOTAL	2	7	31

PAVEMENT DELINEATION QUANTITIES
PDQ-1

STATE OF CALIFORNIA - DEPARTMENT OF TRANSPORTATION
Caltrans TRAFFIC DESIGN

FUNCTIONAL SUPERVISOR: MOHAMMED QATAMI
CALCULATED-DESIGNED BY: QUAN TRINH
CHECKED BY: HUE NGUYEN
REVISED BY: QT
DATE REVISED: 09-16-09

LAST REVISION 09-16-09
DATE PLOTTED => 05-NOV-2009
TIME PLOTTED => 11:36

Dist	COUNTY	ROUTE	POST MILES TOTAL PROJECT	SHEET No.	TOTAL SHEETS
05	Mon	101	R12.6/R15.5	28	42

REGISTERED CIVIL ENGINEER DATE 8-25-09

11-2-09
PLANS APPROVAL DATE

REGISTERED PROFESSIONAL ENGINEER KHALID A. DAHIR No. 70240 Exp. 9/30/10 CIVIL STATE OF CALIFORNIA

THE STATE OF CALIFORNIA OR ITS OFFICERS OR AGENTS SHALL NOT BE RESPONSIBLE FOR THE ACCURACY OR COMPLETENESS OF SCANNED COPIES OF THIS PLAN SHEET.

ROADWAY QUANTITIES

STATION	DIRECTION	WORK DESCRIPTION	HOT MIX ASPHALT (TYPE A)	ASPHALTIC EMULSION (FOG SEAL COAT)	TACK COAT	CLASS 2 AB	ROADWAY EXCAVATION	EMBANKMENT (N)	RECONSTRUCT MBGR	RECONSTRUCT TERMINAL SYSTEM (TYPE ET)	RECONSTRUCT END ANCHOR ASSEMBLY (TYPE SFT)
			Ton	Ton	Ton	CY	CY	CY	LF	EA	EA
Sta 197+68 TO Sta 219+80	NB/SB		498		1.0	655	962	600			
Sta 219+80 TO Sta 223+80	NB		45		0.1	60	82	10			
Sta 223+80 TO Sta 236+00	NB		137		0.3	196	248	100			
Sta 236+00 TO Sta 256+20	NB/SB		454		0.9	598	823	240			
Sta 256+20 TO Sta 258+40	SB		25		0.05	48	45	30			
Sta 274+40 TO Sta 286+00	SB		152		0.3	171	236	130			
Sta 286+00 TO Sta 303+28	NB/SB		389		0.8	512	704	360			
Sta 197+68 TO Sta 303+28	NB/SB			50							
Sta 243+29 TO Sta 258+30	NB/SB								1445	1	1
		TOTAL	1700	50	3.4	2240	3100	1470	1445	1	1

(N) NOT A SEPARATE PAY ITEM, FOR INFORMATION PURPOSES ONLY

WATER POLLUTION CONTROL

PLAN SHEET No.	TEMPORARY CHECK DAM	TEMPORARY DRAINAGE INLET PROTECTION
	FT	EA
L-1	40	2
L-2	40	2
L-3	20	1
L-4	20	1
L-5	40	2
L-7	20	1
L-8	20	1
L-9	20	1
TOTAL	220	11

RUMBLE STRIP

STATION	LOCATION	
	NB	SB
	Sta	Sta
Sta 197+68 TO Sta 219+80	23	23
Sta 219+80 TO Sta 223+80	4	
Sta 223+80 TO Sta 256+20	35	35
Sta 256+20 TO Sta 258+40		2
Sta 274+40 TO Sta 286+00		12
Sta 286+00 TO Sta 303+28	18	18
SUBTOTAL	80	90
TOTAL	170	

PERMANENT EROSION CONTROL

STATION	EROSION CONTROL (DRILL SEED)	(N) SEED	(N) FIBER	(N) STABILIZING EMULSION	* TEMPORARY FENCE (TYPE ESA)
	ACRE	LB	LB	LB	LF
194+00 TO 207+49	1.68	44	881	420	
207+49 TO 220+49	1.66	43	872	415	
220+49 TO 233+50	1.21	31	635	302	463
233+50 TO 246+50	1.10	28	575	274	537
246+50 TO 259+50	0.55	14	289	138	
259+50 TO 272+49	1.89	49	993	473	
272+49 TO 285+50	1.23	32	645	307	
285+50 TO 298+50	1.25	32	655	312	
298+50 TO 306+96	0.71	18	373	178	
TOTAL	11.28	291	5918	2819	1000

(N) NOT A SEPARATE PAY ITEM, FOR INFORMATION PURPOSES ONLY

* EXACT LOCATIONS OF TEMPORARY FENSE (TYPE ESA) TO BE DETERMINED BY THE ENGINEER.

REPLACE SURVEY MONUMENT

STATION	OFFSET	REPLACE SURVEY MONUMENT
		EA
STA 275+86.35 CL1 Rte 101	1.237' Lt	1
	TOTAL	1

TREE REMOVAL (N) (CLEARING AND GRUBBING)

SHEET No.	STATION	LEFT	RIGHT	DBH (Ft)	SPECIES
L-1	202+43		X	1.33-0.83	LIVE OAK
L-3	230+10		X	1.31	LIVE OAK
L-3	233+00	X		0.98	LIVE OAK
L-4	233+68	X		0.98	LIVE OAK
L-4	234+40		X	0.49	BLUE OAK
L-4	234+80		X	0.49	BLUE OAK
L-4	235+16		X	1.64	LIVE OAK
L-4	235+27	X		1.31	LIVE OAK
L-4	235+42	X		0.98	BLUE OAK
L-4	235+51	X		0.98	BLUE OAK
L-4	236+16	X		1.31	LIVE OAK
L-4	237+73	X		1.31	LIVE OAK
L-4	242+24	X		1.97	LIVE OAK
L-4	244+99	X		0.97	BLUE OAK
L-5	248+75		X	0.98	LIVE OAK

NOTE: (N) NOT A SEPARATE PAY ITEM, FOR INFORMATION ONLY.

SUMMARY OF QUANTITIES

Q-1

REVISED BY | DATE REVISED
JOHNNY REYES | KHALID DAHIR
CALCULATED-DESIGNED BY | CHECKED BY
FUNCTIONAL SUPERVISOR
ARTHUR RAMIREZ

STATE OF CALIFORNIA - DEPARTMENT OF TRANSPORTATION
Caltrans
06-DESIGN

LAST REVISION 08-25-09 | DATE PLOTTED => 09-NOV-2009 | TIME PLOTTED => 13:17

Dist	COUNTY	ROUTE	POST MILES TOTAL PROJECT	SHEET No.	TOTAL SHEETS
05	Mon	101	R12.6/R15.5	29	42

LICENSED LANDSCAPE ARCHITECT

11-2-09
PLANS APPROVAL DATE

LICENSED LANDSCAPE ARCHITECT
Laurie D. Dunn No. 3506
Signature
4/30/10
Renewal date
8/26/09
Date
STATE OF CALIFORNIA

THE STATE OF CALIFORNIA OR ITS OFFICERS OR AGENTS SHALL NOT BE RESPONSIBLE FOR THE ACCURACY OR COMPLETENESS OF SCANNED COPIES OF THIS PLAN SHEET.

ABBREVIATIONS

AMEND — amendment
B & B — balled and burlapped
Dia — diameter
EA — each
lb — pound
oz. — ounce
Ft — foot/feet
SQFT — square feet
CF — cubic feet
Max — maximum
Min — minimum
NCN — no common name
No. — number
Pkt — packet
PLT ESTB — plant establishment
Pvmt — pavement
R/W — right of way
SF — state furnished
TRVD — traveled

APPLICABLE WHEN CIRCLED:

1 - Quantities shown are "per plant" unless shown as SQFT or SQYD application rates.
2 - Sufficient to receive root ball.
3 - Does not apply to mulch areas.
4 - As shown on plans.
5 - Unless otherwise shown on plans.
6 - See detail.
7 - See Special Provisions.
8 - Plant hole is 36 inches diameter by 48 inches deep.

PLANT LIST AND PLANTING SPECIFICATIONS

PLANT GROUP	PLANT No.	SYMBOL	BOTANICAL NAME	COMMON NAME	SIZE	QUANTITY EACH	HOLE SIZE (INCH) Dia	HOLE SIZE (INCH) DEPTH	BASIN TYPE	IRON SULFATE 1	SOIL AMEND 1	COMMERCIAL FERTILIZER 1 PLANTING	COMMERCIAL FERTILIZER 1 PLT ESTB	BASIN MULCH	STAKING	PLANTING LIMITS MINIMUM DISTANCE (Ft) FROM TRVD WAY	PVMT	FENCE	WALL	PAVED DITCH	EARTH DITCH	ON CENTER (Ft)	REMARKS
A	1		QUERCUS AGRIFOLIA	COAST LIVE OAK	No.1	54	36	48	6 8	-	6 CF	1 Pkt	-	8 CF	-	30	-	20	15	15	17	10	PLANT COMBINATION 1 6 TREE
	2		BACCHARIS PILULARIS	COYOTE BRUSH	No.1	54						1Pkt											PLANT COMBINATION 1 6 SHRUB
O	3		QUERCUS AGRIFOLIA	COAST LIVE OAK	ACORN	108																	PLANT COMBINATION 1 6 ACORN
A	4		QUERCUS DOUGLASII	BLUE OAK	No.1	46	36	48	6 8	-	6 CF	1Pkt	-	8 CF	-	30	-	20	15	15	17	10	PLANT COMBINATION 2 6 TREE
	5		BACCHARIS PILULARIS	COYOTE BRUSH	No.1	46						1Pkt											PLANT COMBINATION 2 6 SHRUB
O	6		QUERCUS DOUGLASII	BLUE OAK	ACORN	92																	PLANT COMBINATION 2 6 ACORN

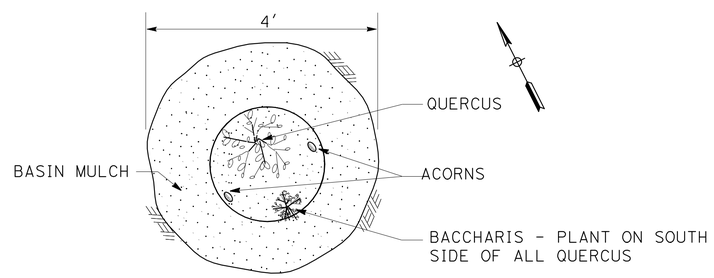

PLAN

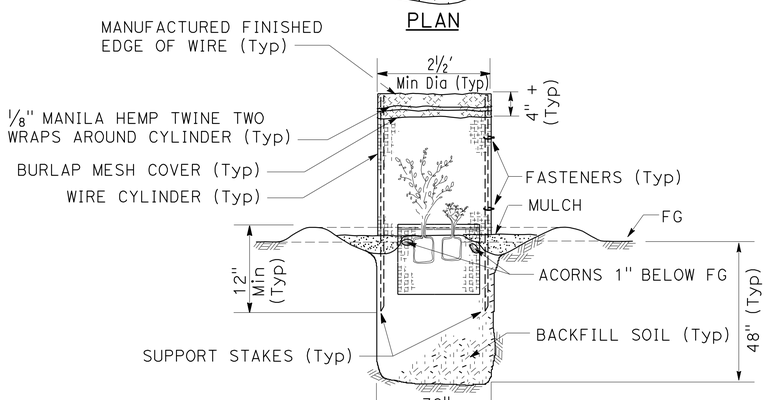

SECTION FLAT AREA

PLANTING BASIN AND HOLE WITH FOLIAGE AND ROOT PROTECTION

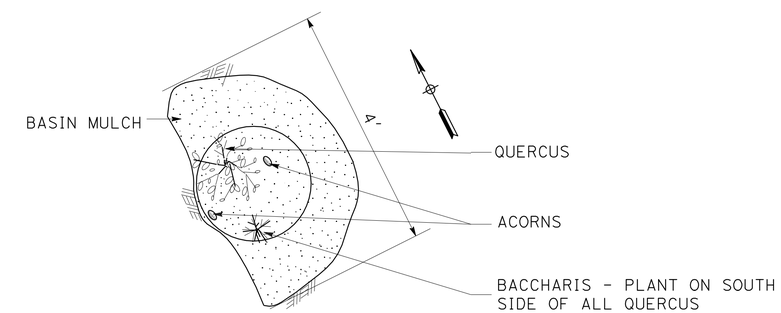

PLAN

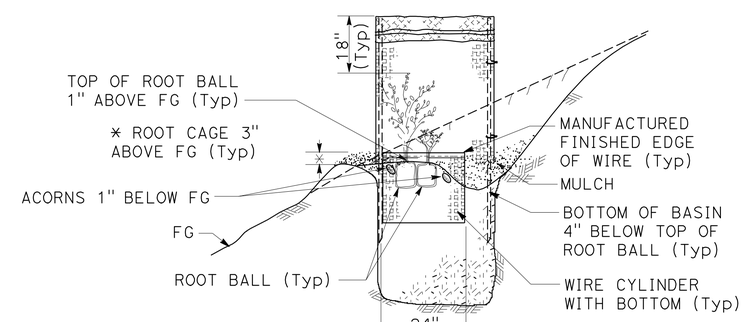

SECTION SLOPE AREA

PLANT LIST
NO SCALE
PL-1

REVISED BY | DATE REVISED
CALCULATED-DESIGNED BY | CHECKED BY
SENIOR LANDSCAPE ARCHITECT
STATE OF CALIFORNIA - DEPARTMENT OF TRANSPORTATION
Caltrans

LAST REVISION 08-26-09 | DATE PLOTTED => 09-NOV-2009 | TIME PLOTTED => 13:30

Dist	COUNTY	ROUTE	POST MILES TOTAL PROJECT	SHEET No.	TOTAL SHEETS
05	Mon	101	R12.6/R15.5	30	42

LICENSED LANDSCAPE ARCHITECT

11-2-09
PLANS APPROVAL DATE

LICENSED LANDSCAPE ARCHITECT
Laurie D. Dunn No. 3506
Signature
4/30/10
Renewal Date
8/26/09
Date
STATE OF CALIFORNIA

THE STATE OF CALIFORNIA OR ITS OFFICERS OR AGENTS SHALL NOT BE RESPONSIBLE FOR THE ACCURACY OR COMPLETENESS OF SCANNED COPIES OF THIS PLAN SHEET.

NOTE:

FOR COMPLETE RIGHT OF WAY AND ACCURATE ACCESS DATA, SEE RIGHT OF WAY RECORD MAPS AT DISTRICT OFFICE.

PLANTING NOTES:

1. PLANTING LAYOUT IS DIAGRAMATIC.
2. PLANTING PATTERN SHALL HAVE RANDOM APPEARANCE, AVOID STRAIGHT ROWS.
3. PRIOR TO PLANTING AND BACKFILLING BASINS, FILL EACH BASIN HALFWAY WITH WATER AND DRAIN.

PLANTING LEGEND:

-·-·-·-·- LIMITS OF ROADSIDE CLEARING

-------- LIMITS OF MOWING

PLANT COMBINATION 1
1-#1 QUERCUS AGRIFOLIA
1-#1 BACCHARIS PILULARIS
2-ACORNS QUERCUS AGRIFOLIA

PLANT COMBINATION 2
1-#1 QUERCUS DOUGLASII
1-#1 BACCHARIS PILULARIS
2-ACORNS QUERCUS DOUGLASII

TOTAL PLANT QUANTITIES	
46	QUERCUS DOUGLASII
46	BACCHARIS PILULARIS
92	QUERCUS DOUGLASII ACORNS
PLANT COMBINATION 2	

TOTAL PLANT QUANTITIES	
54	QUERCUS AGRIFOLIA
54	BACCHARIS PILULARIS
108	QUERCUS AGRIFOLIA ACORNS
PLANT COMBINATION 1	

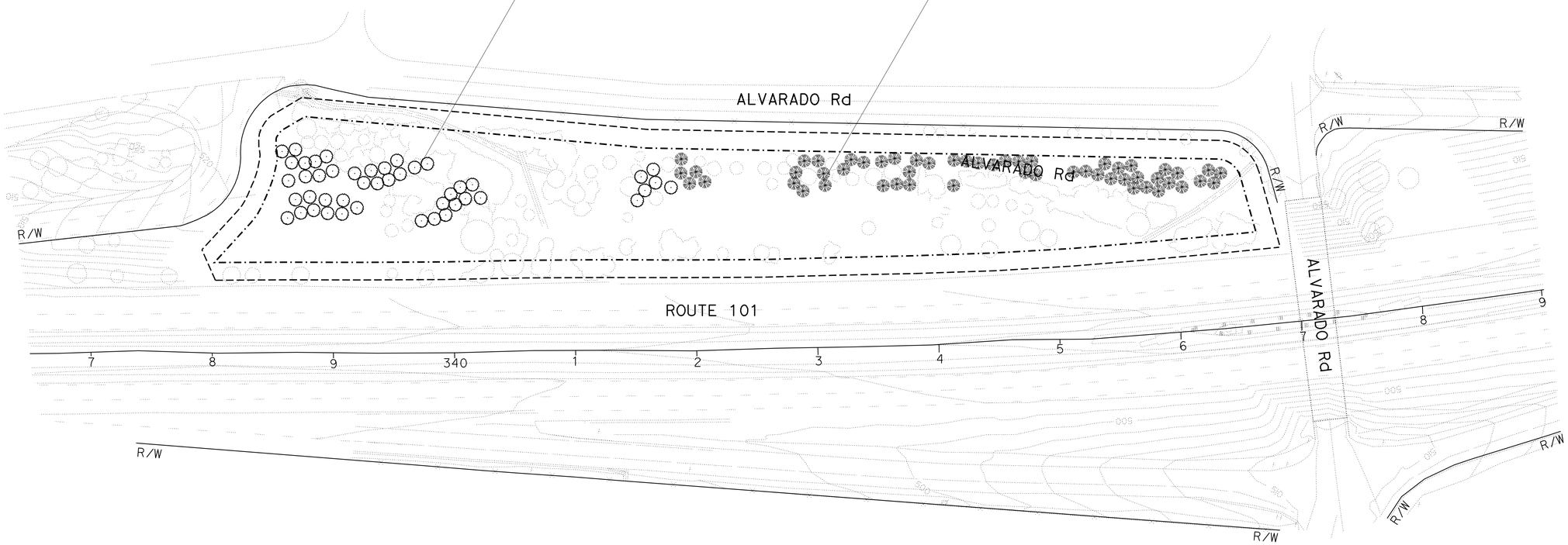

THIS PLAN IS ACCURATE FOR PLANTING WORK ONLY

PLANTING PLAN

SCALE 1"-50'

PP-1

STATE OF CALIFORNIA - DEPARTMENT OF TRANSPORTATION
LANDSCAPE ARCHITECTURE

SENIOR LANDSCAPE ARCHITECT: DENNIS REEVES

CALCULATED-DESIGNED BY: KATHLEEN JENKINS
CHECKED BY: LAURIE D. CUMMINGS

REVISED BY
DATE REVISED

LAST REVISION 08-26-09
DATE PLOTTED => 05-NOV-2009
TIME PLOTTED => 11:36

Dist	COUNTY	ROUTE	POST MILES TOTAL PROJECT	SHEET No.	TOTAL SHEETS
05	Mon	101	R12.6/R15.5	31	42

LICENSED LANDSCAPE ARCHITECT

11-2-09
PLANS APPROVAL DATE

LICENSED LANDSCAPE ARCHITECT
Laurie D. Dunn No. 3506
Signature
4/30/10
Renewal Date
8/26/09
Date
STATE OF CALIFORNIA

THE STATE OF CALIFORNIA OR ITS OFFICERS OR AGENTS SHALL NOT BE RESPONSIBLE FOR THE ACCURACY OR COMPLETENESS OF SCANNED COPIES OF THIS PLAN SHEET.

NOTE:

FOR COMPLETE RIGHT OF WAY AND ACCURATE ACCESS DATA, SEE RIGHT OF WAY RECORD MAPS AT DISTRICT OFFICE.

IRRIGATION NOTES:

1. PLASTIC PIPE (IRRIGATION LINE) SHALL NOT EXCEED 250 FT IN LENGTH.
2. ¾" PLASTIC PIPE (IRRIGATION LINE) AND 1" PLASTIC (SUPPLY LINE) (MAIN) SHALL BE INSTALLED ON GRADE.
3. UNLABELED LATERAL PLASTIC PIPE (SUPPLY LINE) SHALL BE 1".
4. LATERAL SUPPLY LINE FOR TYPE D-1 SPRINKLERS SHALL CONFORM TO THE FOLLOWING:

PIPE SIZE	Max FLOW (GPM)
1"	57

A-X-XXX
- QUANTITY TYPE D SPRINKLERS
- G/Min (GALLONS PER MINUTE)
- CCA NUMBER

IRRIGATION LEGEND:

¾" PLASTIC PIPE (IRRIGATION LINE)

1" PLASTIC PIPE (SUPPLY LINE) (MAIN)

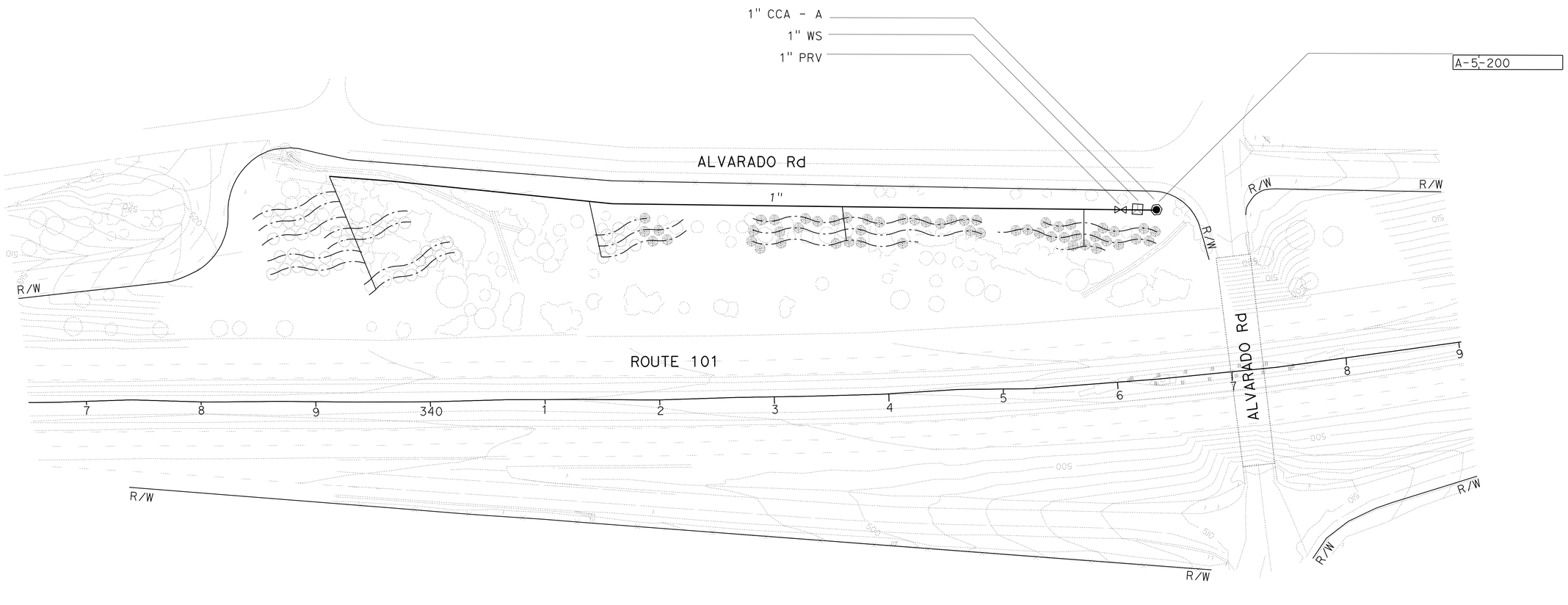

THIS PLAN ACCURATE FOR IRRIGATION WORK ONLY.

IRRIGATION PLAN
SCALE 1"=50'

IP-1

STATE OF CALIFORNIA - DEPARTMENT OF TRANSPORTATION
Caltrans®
LANDSCAPE ARCHITECTURE

SENIOR LANDSCAPE ARCHITECT: DENNIS REEVES

CALCULATED-DESIGNED BY: KATHLEEN JENKINS
CHECKED BY: LAURIE D. CUMMINGS

REVISED BY
DATE REVISED

LAST REVISION 08-26-09
DATE PLOTTED => 09-NOV-2009
TIME PLOTTED => 13:31

Dist	COUNTY	ROUTE	POST MILES TOTAL PROJECT	SHEET No.	TOTAL SHEETS
05	Mon	101	R12.6/R15.5	32	42

LICENSED LANDSCAPE ARCHITECT

11-2-09
PLANS APPROVAL DATE

LICENSED LANDSCAPE ARCHITECT
Laurie D. Dunn No. 3506
Signature
4/30/10
Renewal Date
8/26/09
Date
STATE OF CALIFORNIA

THE STATE OF CALIFORNIA OR ITS OFFICERS OR AGENTS SHALL NOT BE RESPONSIBLE FOR THE ACCURACY OR COMPLETENESS OF SCANNED COPIES OF THIS PLAN SHEET.

SPRINKLER SCHEDULE

SYMBOL	TYPE	DESCRIPTION	SPRAY PATTERN	OPERATING PRESSURE (PSI)	PRESSURE COMPENSATING	PLUS/MINUS 5% ② DISCHARGE: GALLONS PER MINUTE (GPM)	GALLONS PER HOUR (GPH)	RADIUS (Ft)	WIDTH x LENGTH (Ft)	MATERIAL	INLET CONNECTION (NPT INCH)	POSITIVE-LOCKING ADJ ARC STOP	BACKSPLASH PREVENTER	DIFFUSER PIN	DISTANCE CONTROL FLAP	ADJ DISCHARGE	RISER: TYPE	MATERIAL: PLASTIC	GALVANIZED	SIZE (IPS INCH)	HEIGHT (INCH)	FLOW SHUTOFF DEVICE	⑤ SWING JOINT (TYPE)	RISER SUPPORT	SPRINKLER PROTECTOR (TYPE)	REMARKS
-	D-1	EMITTER	-	35	X	-	1	-	-	PL	-	-	-	-	-	-	-	-	-	-	-	-	-	-	-	2 EMITTERS PER PLANTING BASIN

X IN BOX DENOTES REQUIREMENT

APPLICABLE WHEN CIRCLED BELOW:

1 - See Special Provisions.
② - If a pressure compensating device is specified, the discharge and radii shown reflect its use.
3 - Arc Stop shall be fitted with a nut and bolt.
4 - Vinyl-coated cast iron housing.
5 - Swing Joints required adjacent to shoulders, curbs, sidewalks, and dikes.
6 - Unless otherwise shown on plans.

ABBREVIATIONS

F — full circle
P — part circle
F/P — full/part circle
Q — quarter circle
T — third circle
H — half circle
TT — two third circle
TQ — three quarter circle
CST — center strip
SST — side strip
EST — end strip
Ft — feet/foot
GPM — gallons per minute
GPH — gallons per hour
Adj — adjustable
PL — plastic
B/B — brass/bronze
B/PL — brass/plastic
B/B/PL — brass/bronze/plastic
NPT — national pipe thread
IPS — iron pipe size
PSI — pounds per square inch

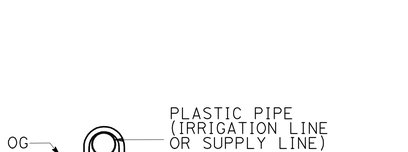

SECTION

PLASTIC PIPE ANCHOR

THIS PLAN ACCURATE FOR IRRIGATION WORK ONLY.

NO SCALE

IRRIGATION SCHEDULE AND DETAILS
LD-1

REVISED BY | DATE REVISED
CALCULATED-DESIGNED BY | CHECKED BY
SENIOR LANDSCAPE ARCHITECT
STATE OF CALIFORNIA - DEPARTMENT OF TRANSPORTATION
Caltrans

LAST REVISION 08-26-09
DATE PLOTTED => 05-NOV-2009
TIME PLOTTED => 11:37

DIST	COUNTY	ROUTE	POST MILES TOTAL PROJECT	SHEET NO.	TOTAL SHEETS
05	Mon	101	R12.6/R15.5	33	42

REGISTERED CIVIL ENGINEER

November 17, 2006
PLANS APPROVAL DATE

REGISTERED PROFESSIONAL ENGINEER Dallas Forester No. C37765 Exp. 12-31-06 CIVIL STATE OF CALIFORNIA

The State of California or its officers or agents shall not be responsible for the accuracy or completeness of electronic copies of this plan sheet.

To accompany plans dated 11-2-09

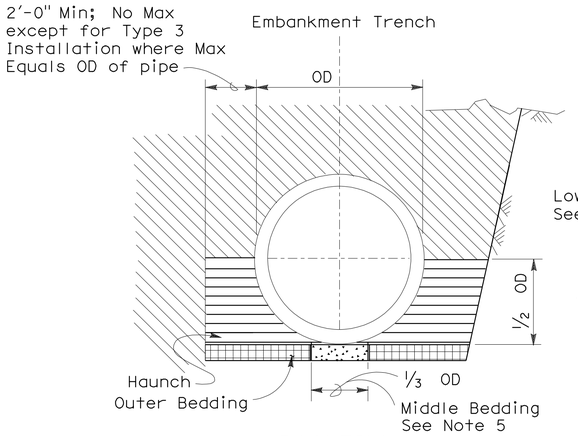

BACKFILL

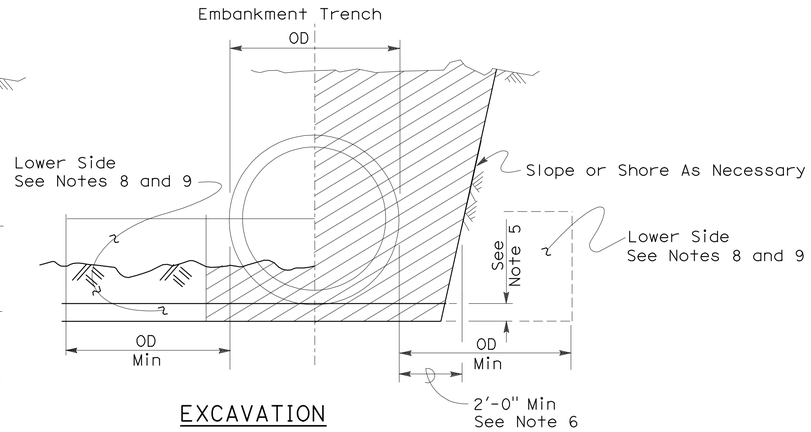

EXCAVATION

Roadway Embankment

Structure Backfill (Culvert) See Note 6

Structure Backfill (Culvert) See Note 6

Loose Backfill

Excavation Structure (Culvert)

TYPE 1 INSTALLATION:

The haunch and outer bedding shall be compacted to a minimum 90 percent relative compaction. In addition, the minimum sand equivalent in these areas shall be 30 and the maximum percentage passing the 75 μm sieve size shall be 12.

TYPE 2 INSTALLATION:

The haunch and outer bedding shall be compacted to a minimum 90 percent relative compaction. In addition, the minimum sand equivalent in these areas shall be 25.

TYPE 3 INSTALLATION:

The haunch and outer bedding shall be compacted to a minimum 85 percent relative compaction. 90 percent relative compaction will be required where the fill over the pipe is less than 4'-0" or 1/2 OD.

NOTES:

1. Unless otherwise shown on the plans or specified in the special provision, the Contractor shall have the option of selecting the class of RCP and the type of installation to be used, provided the height of cover does not exceed the value shown for the RCP selected.
   Example: 24" RCP culvert with maximum cover of 19'-0" the options are:
   a) Class III or stronger with Installation Type 1.
   b) Class III Special or stronger with Installation Type 2.
   c) Class IV Special or stronger with Installation Type 3.
   Cover is defined as the maximum vertical distance from top of the pipe to finished grade within the length of any given culvert.
2. The class of RCP and Installation Type selected shall be the same throughout the length of any given culvert.
3. The "length of any culvert" is defined as the culvert between:
   a) Successive drainage structure (inlets, junction boxes, headwalls, etc.).
   b) A drainage structure and the inlet or outlet end of the culvert.
   c) The inlet and outlet end of the culvert when there are no intervening drainage structures.
4. Oval and arch shaped RCP shall not be used.
5. 1/25 OD Min, not less than 3".
6. Slurry cement backfill may be substituted for backfill in the outer bedding and haunch areas. If slurry is used the outer and middle beddings shall be omitted. Prior to installation the soil under the middle 1/3 of the outside diameter of the pipe shall be softened by scarifying or other means to a minimum depth of 1/25 OD, but not less than 3". Where slurry cement backfill is used clear distance to trench wall may be reduced as set forth in Section 19-3.062 of the Standard Specifications.
7. Backfill shall be placed full width of excavation except where dimensions are shown for backfill width or thickness. Dimensions shown are minimums.
8. Lower side shall be suitable material as determined by the Engineer. Otherwise it shall be considered unsuitable as set forth in Section 19-2.02 of the Standard Specifications. See Note 9.
9. Where the pipe is placed in a trench, if the trench walls are sloped at 5 vertical to 1 horizontal or steeper for at least 90 percent of the trench height or up to not less than 12" from the grading plane, the firmness of the soil in the lower side need not be considered.
10. Non-reinforced precast concrete pipe sizes 3'-0" or smaller may be placed under installation Types 1, 2 or 3.

INSTALLATION TYPE 1

MINIMUM CLASS AND D-LOAD	COVER	
	108" Dia AND SMALLER	OVER 108" Dia
Class II 1000D	14.9'	12.9'
Class III 1350D	15.0' - 20.9'	13.0' - 18.9'
Class III Special 1700D	21.0' - 26.9'	19.0' - 24.9'
Class IV 2000D	27.0' - 31.9'	25.0' - 29.9'
Class IV Special 2500D	32.0' - 40.9'	30.0' - 38.9'
Class V 3000D	41.0' - 49.9'	39.0' - 46.9'
Class V Special 3600D	50.0' - 59.0'	47.0' - 58.0'

INSTALLATION TYPE 2

MINIMUM CLASS AND D-LOAD	COVER
Class II 1000D	9.9'
Class III 1350D	10.0'- 14.9'
Class III Special 1700D	15.0' - 19.9'
Class IV 2000D	20.0' - 24.9'
Class IV Special 2500D	25.0' - 31.9'
Class V 3000D	32.0' - 38.9'
Class V Special 3600D	39.0' - 47.0'

INSTALLATION TYPE 3

MINIMUM CLASS AND D-LOAD	COVER	
	48" Dia AND SMALLER	OVER 48" Dia
Class II 1000D	7.9'	5.9'
Class III 1350D	8.0' - 10.9'	6.0' - 8.9'
Class III Special 1700D	11.0' - 14.9'	9.0' - 12.9'
Class IV 2000D	15.0' - 17.9'	13.0' - 15.9'
Class IV Special 2500D	18.0' - 21.9'	16.0' - 19.9'
Class V 3000D	22.0' - 26.9'	20.0' - 24.9'
Class V Special 3600D	30.0' - 33.0'	25.0' - 31.0'

STATE OF CALIFORNIA
DEPARTMENT OF TRANSPORTATION

EXCAVATION AND BACKFILL CONCRETE PIPE CULVERTS

NO SCALE

RSP A62DA DATED NOVEMBER 17, 2006 SUPERSEDES STANDARD PLAN A62DA DATED MAY 1, 2006 - PAGE 20 OF THE STANDARD PLANS BOOK DATED MAY 2006.

REVISED STANDARD PLAN RSP A62DA

2006 REVISED STANDARD PLAN RSP A62DA

10-26-06

DIST	COUNTY	ROUTE	POST MILES TOTAL PROJECT	SHEET NO.	TOTAL SHEETS
05	Mon	101	R12.6/R15.5	34	42

Mark S. Turner
PROFESSIONAL LAND SURVEYOR

June 30, 2006
PLANS APPROVAL DATE

LICENSED LAND SURVEYOR
Mark S. Turner
No. 6228
Exp. 3-31-08
STATE OF CALIFORNIA

The State of California or its officers or agents shall not be responsible for the accuracy or completeness of electronic copies of this plan sheet.

To accompany plans dated 11-2-09

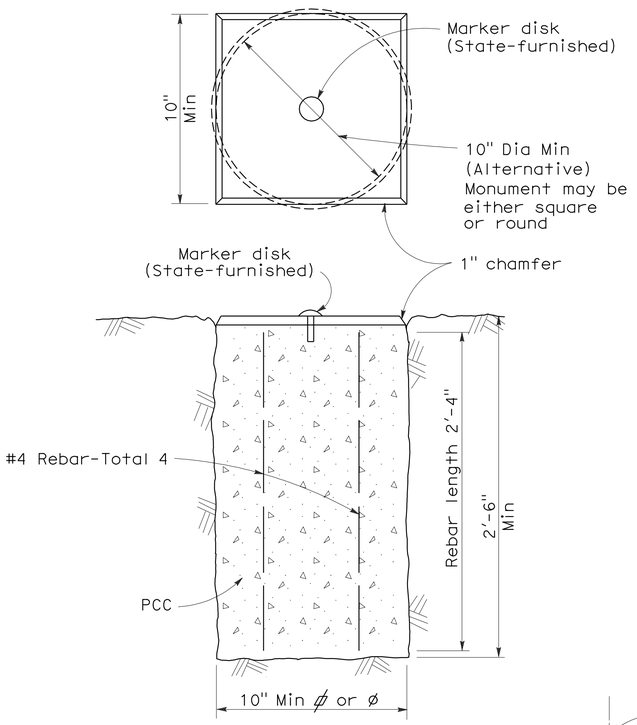

TYPE A

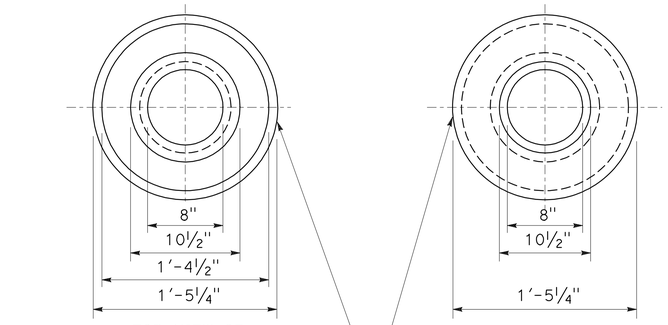

TOP VIEW OF
MONUMENT OF WELL RING

BOTTOM VIEW OF
MONUMENT OF WELL RING

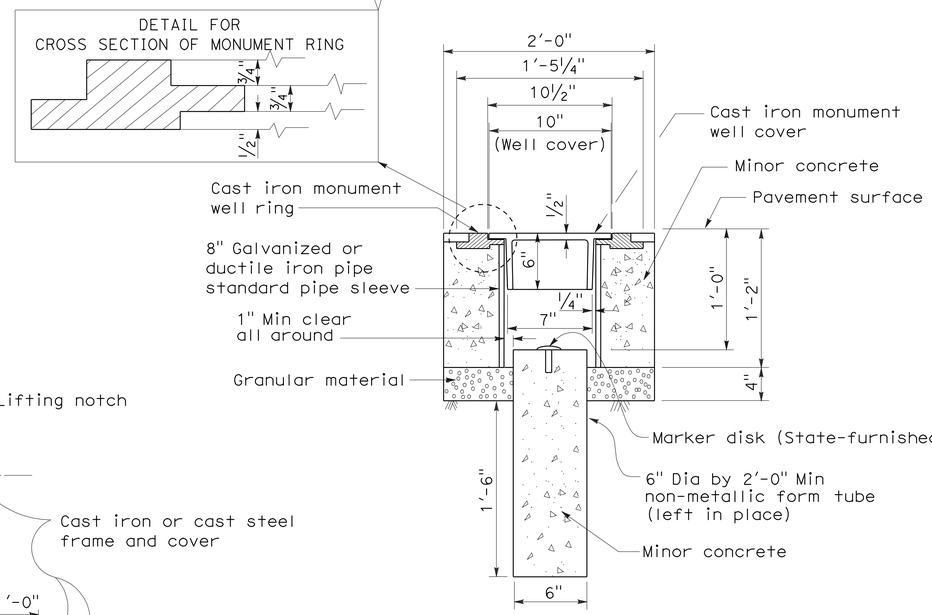

TYPE B

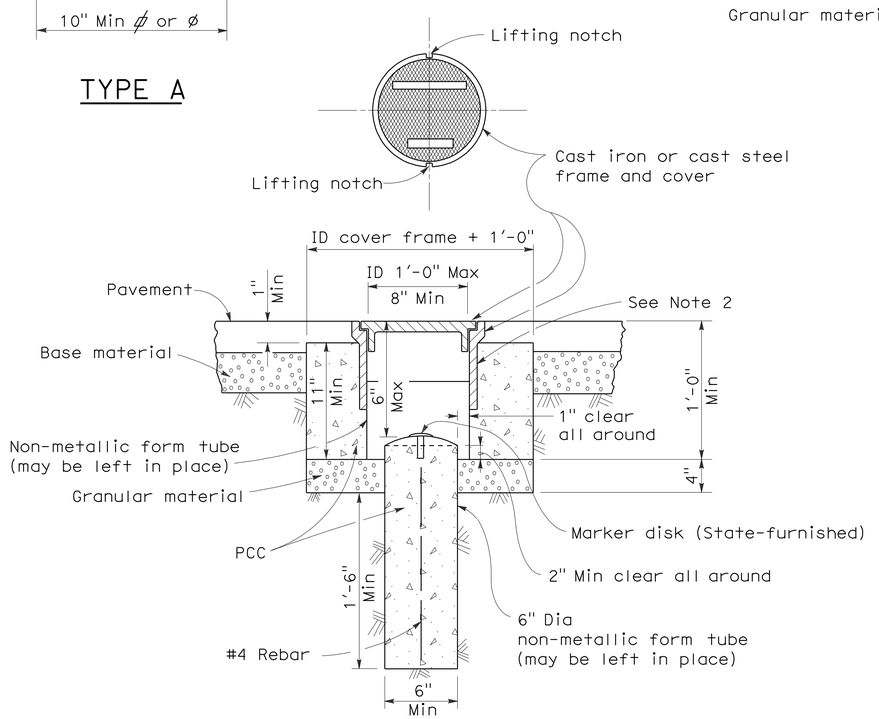

TYPE D
Alternative No. 1

NOTES:

1. The configuration of the cast iron or cast steel frame and cover may vary from that shown.
2. Frame shall be embedded in the concrete a minimum of 3".
3. Type D monument shall be either Alternative No. 1 or Alternative No. 2 at the contractor's option.
4. All portland cement concrete shall be Class 2 or minor concrete with 1" maximum aggregate.

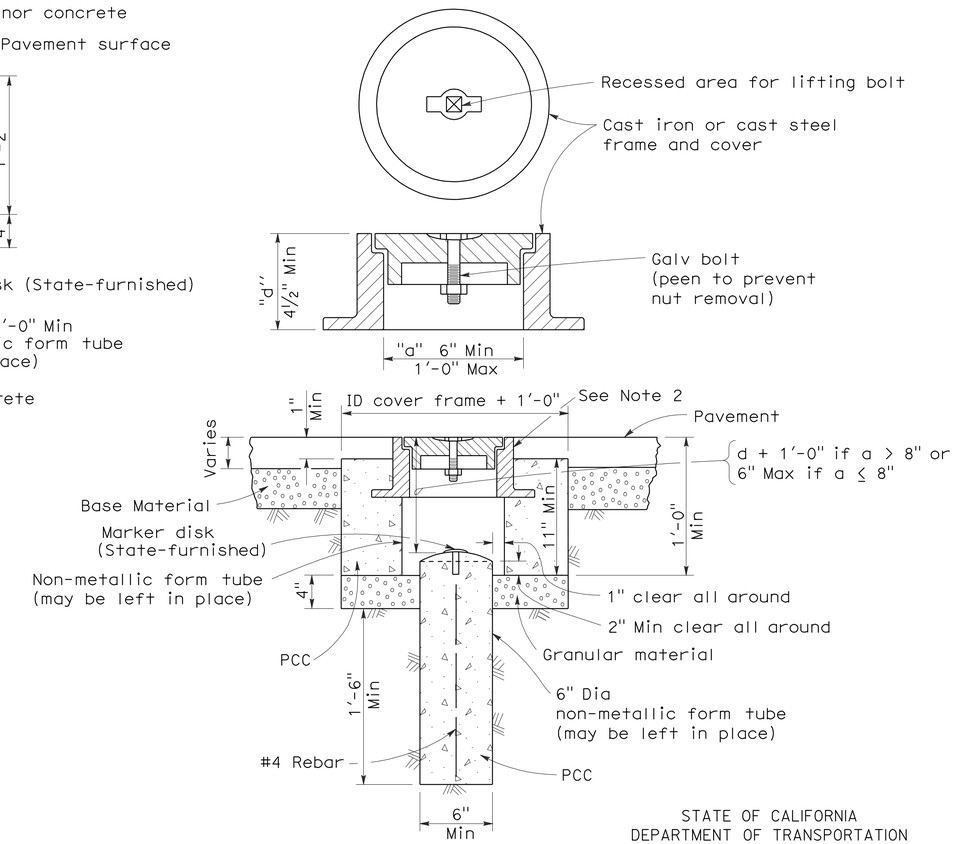

TYPE D
Alternative No. 2

STATE OF CALIFORNIA
DEPARTMENT OF TRANSPORTATION

SURVEY MONUMENTS

NO SCALE

RSP A74 DATED JUNE 30, 2006 SUPERSEDES STANDARD PLAN DATED MAY 1, 2006 - PAGE 28 OF THE STANDARD PLANS BOOK DATED MAY 2006.

REVISED STANDARD PLAN RSP A74

2006 REVISED STANDARD PLAN RSP A74

5-24-06

DIST	COUNTY	ROUTE	POST MILES TOTAL PROJECT	SHEET NO.	TOTAL SHEETS
05	Mon	101	R12.6/R15.5	35	42

Raymond Don Tsztoo
REGISTERED CIVIL ENGINEER

January 18, 2008
PLANS APPROVAL DATE

REGISTERED PROFESSIONAL ENGINEER Raymond Don Tsztoo No. C37332 Exp. 6-30-08 CIVIL STATE OF CALIFORNIA

The State of California or its officers or agents shall not be responsible for the accuracy or completeness of electronic copies of this plan sheet.

To accompany plans dated 11-2-09

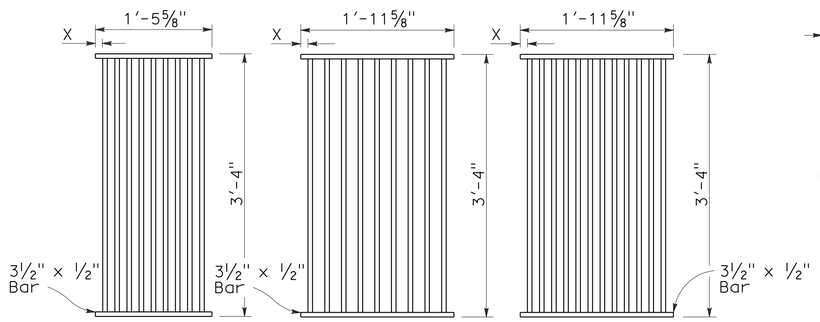

TYPE 18-9

1⅜" Clear spacing. Use within the roadbed on highways where bicycles and pedestrians are excluded.

TYPE 24-9

2" Clear spacing. Use in locations off the roadbed on all types of highways.

TYPE 24-12

1⅜" Clear spacing. Use within the roadbed on highways where bicycles and pedestrians are excluded.

RECTANGULAR GRATE DETAILS

(See table below)

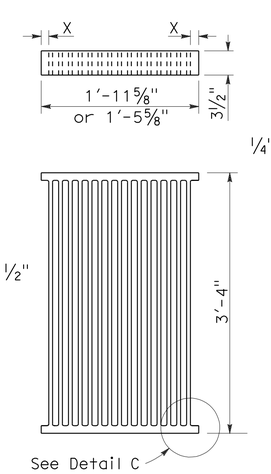

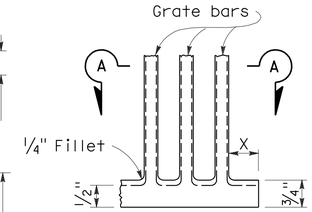

DETAIL C

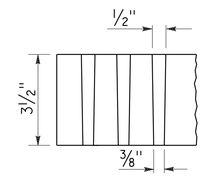

SECTION A-A

ALTERNATIVE CAST NODULAR IRON GRATE OR CAST STEEL GRATE

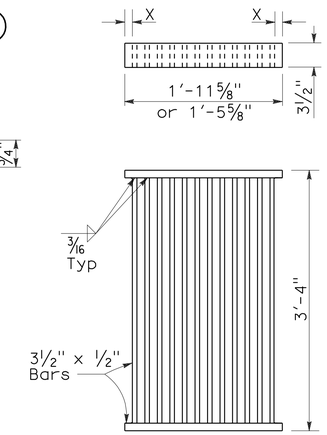

ALTERNATIVE WELDED GRATE

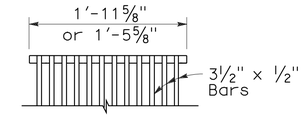

CAST END BLOCK

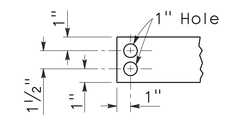

END OF BAR

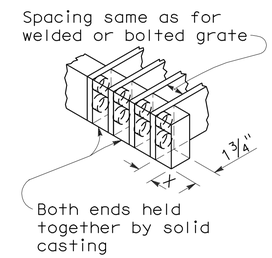

ALTERNATIVE CAST NODULAR IRON OR CAST STEEL END BLOCK GRATE

NOTES:

1. Grate type numbers refer to approximate width of grate in inches and number of bars, respectively.
2. Contractor has the option of using cast nodular iron, cast steel, welded, bolted, or cast end block grate.
3. See Special Provisions for requirements pertaining to galvanizing or asphalt dipping of grates and frames.
4. Rounded top of bars optional on all grates.
5. Pipe inlets with a grate shall be placed so that bars parallel direction of principle surface flow.
6. Full penetration butt welds may be substituted for the fillet welds on all anchors.
7. Standard square, hexagon, round or equivalent headed anchors may be substituted for the right angle hooks on the anchors shown on this plan.
8. Grate and frame weights are based on welded grates (weights of face angles, steps, protection bars, etc. are not included).

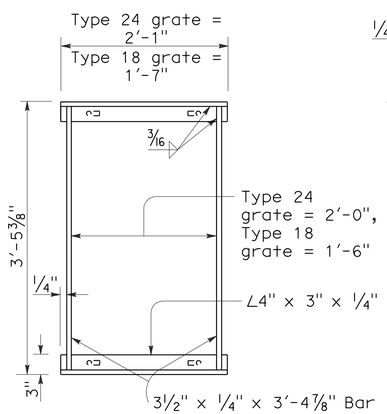

TYPICAL FRAME

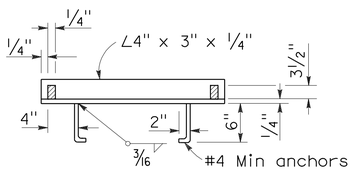

CROSS SECTION

(Thru frame)

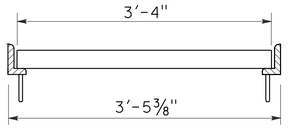

LONGITUDINAL SECTION

(Thru frame and grate)

RECTANGULAR FRAME DETAILS

(For all rectangular grates)

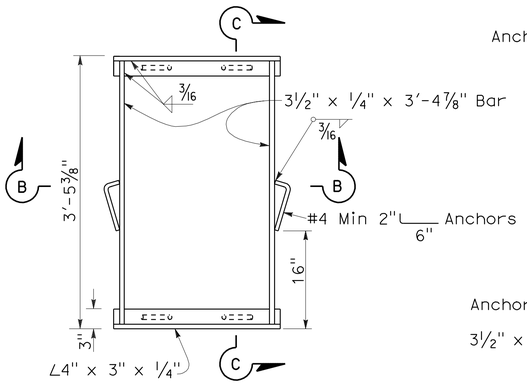

TYPICAL FRAME

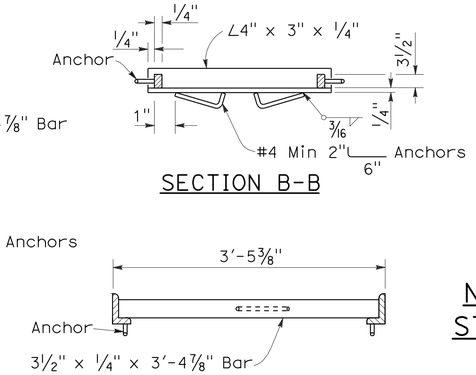

SECTION B-B

SECTION C-C

ALTERNATIVE ANCHOR FOR RECTANGULAR FRAME

(For details not shown, See Rectangular Frame Details)

INLET TYPE	GRATE TYPE	No. OF GRATES	WEIGHT LB
GDO	24-12	2	634
GOL-7	24-12	1	326
GOL-10	24-12	1	326
GO,G1,G2,G3,G4 (TYPE 24)	24-9	1	263
	24-12	1	326
G4 (TYPE 18),G5,G6	18-9	1	249
GT1	18-9	2	498
GT2	18-9	2	498
GT3	24-12	2	652
GT4	24-12	2	652
TRASH RACK			22

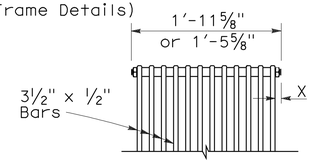

BOLTED END BLOCK

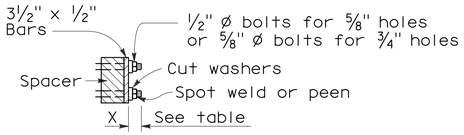

BOLTING DETAIL

ALTERNATIVE BOLTED GRATE

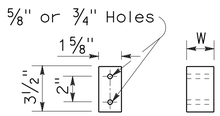

BAR SPACER

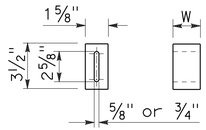

ALTERNATIVE SPACER

W = 1⅜" or 2"

GRATE BAR SPACING TABLE

TYPE	No. OF BARS	CLEAR BAR SPACING	X
18-9	9	1⅜"	1 1/16"
24-9	9	2"	1 9/16"
24-12	12	1⅜"	1¼"

INLET TYPE	COVER TYPE	WEIGHT LB
OS	PLATE	174
OL-7	PLATE	170
OL-10	PLATE	170
OL-14	PLATE	170
OL-21	PLATE	170
OCP	PLATE	112
OCPI	PLATE	112
OCPI	REDWOOD	42
OMP	PLATE	177
OMPI	PLATE	177

BASIS FOR MISC IRON & STEEL FINAL PAY WEIGHTS FOR DRAINAGE INLETS

(See General Notes, No 8)

STATE OF CALIFORNIA
DEPARTMENT OF TRANSPORTATION

GRATE DETAILS

NO SCALE

RSP D77A DATED JANUARY 18, 2008 SUPERSEDES STANDARD PLAN D77A DATED MAY 1, 2006 - PAGE 155 OF THE STANDARD PLANS BOOK DATED MAY 2006.

REVISED STANDARD PLAN RSP D77A

2006 REVISED STANDARD PLAN RSP D77A

12-14-07

DIST	COUNTY	ROUTE	POST MILES TOTAL PROJECT	SHEET NO.	TOTAL SHEETS
05	Mon	101	R12.6/R15.5	36	42

LICENSED LANDSCAPE ARCHITECT

June 5, 2009
PLANS APPROVAL DATE

Gregory A. Balzer 2576 LICENSED LANDSCAPE ARCHITECT STATE OF CALIFORNIA
10-28-10 Renewal Date
2-28-11 Renewal Date
5-14-09 Date

The State of California or its officers or agents shall not be responsible for the accuracy or completeness of electronic copies of this plan sheet.

To accompany plans dated 11-2-09

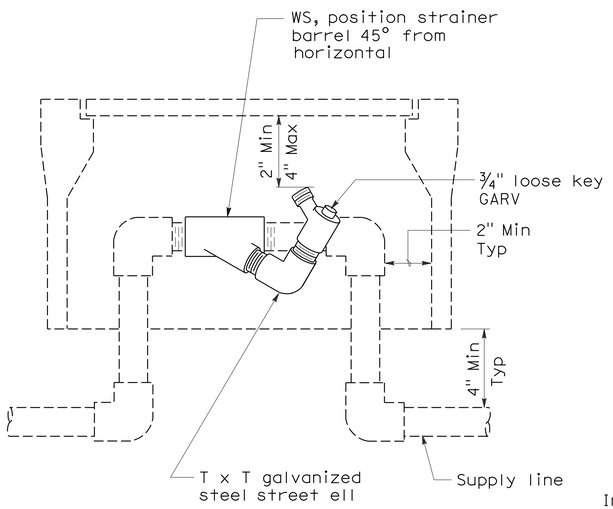

ELEVATION
WYE STRAINER

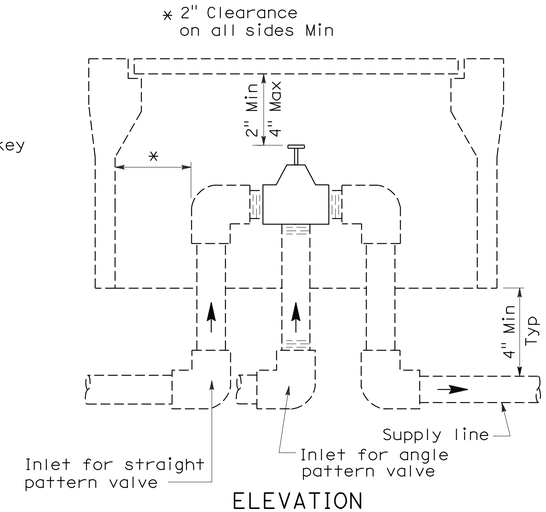

ELEVATION
VALVE

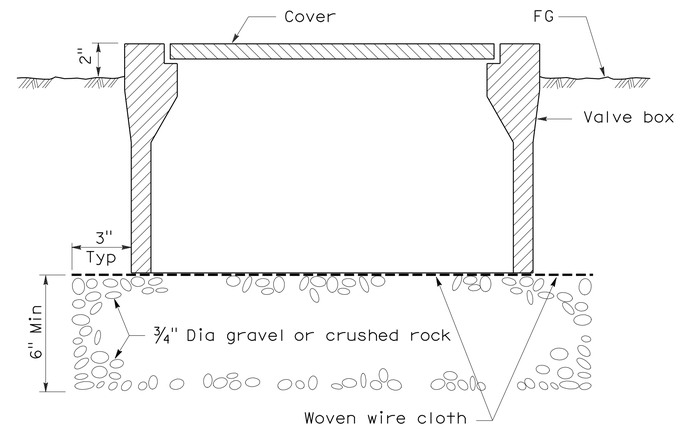

SECTION
VALVE BOX

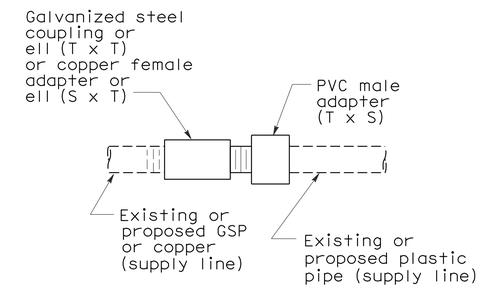

PLAN
GALVANIZED OR COPPER PIPE CONNECTION TO PLASTIC PIPE

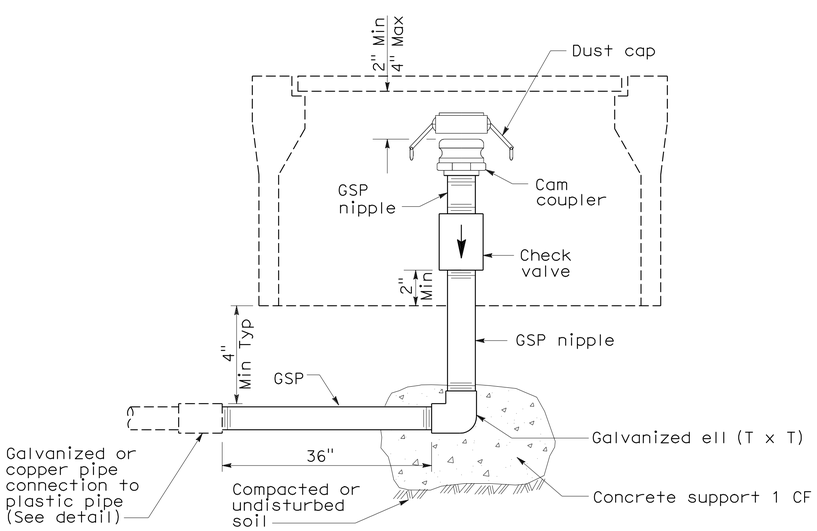

ELEVATION
CAM COUPLER ASSEMBLY

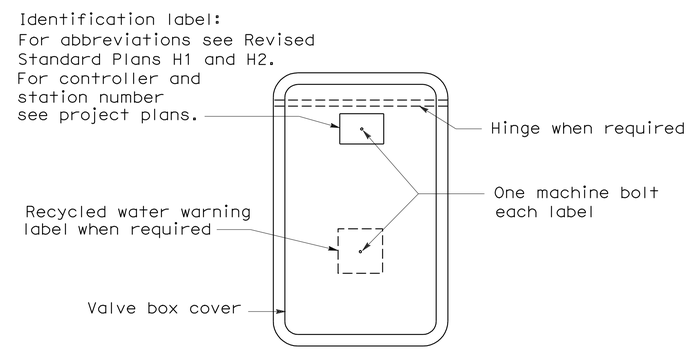

PLAN

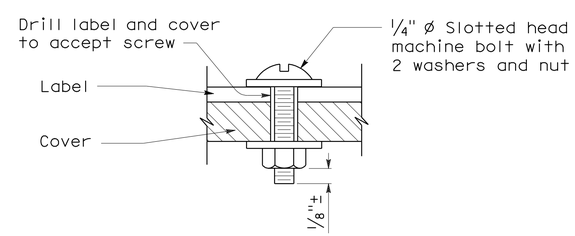

SECTION
VALVE BOX IDENTIFICATION

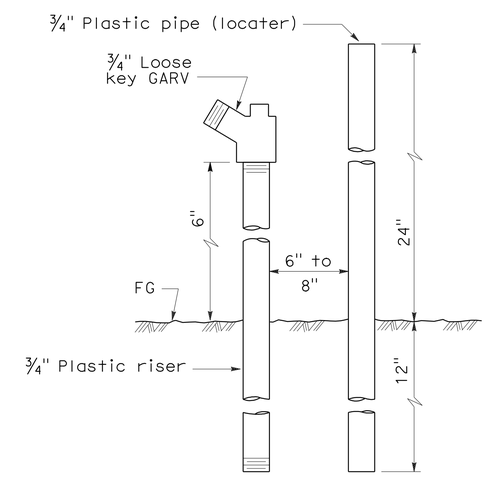

ELEVATION
FLUSH VALVE

STATE OF CALIFORNIA
DEPARTMENT OF TRANSPORTATION

PLANTING AND IRRIGATION DETAILS

NO SCALE

RSP H7 DATED JUNE 5, 2009 SUPERSEDES STANDARD PLAN H7
DATED MAY 1, 2006 - PAGE 207 OF THE STANDARD PLANS BOOK DATED MAY 2006.

REVISED STANDARD PLAN RSP H7

2006 REVISED STANDARD PLAN RSP H7

5-28-09

DIST	COUNTY	ROUTE	POST MILES TOTAL PROJECT	SHEET NO.	TOTAL SHEETS
05	Mon	101	R12.6/R15.5	37	42

Randell D. Hiatt
REGISTERED CIVIL ENGINEER

June 6, 2008
PLANS APPROVAL DATE

REGISTERED PROFESSIONAL ENGINEER
Randell D. Hiatt
No. C50200
Exp. 6-30-09
CIVIL
STATE OF CALIFORNIA

The State of California or its officers or agents shall not be responsible for the accuracy or completeness of electronic copies of this plan sheet.

To accompany plans dated 11-2-09

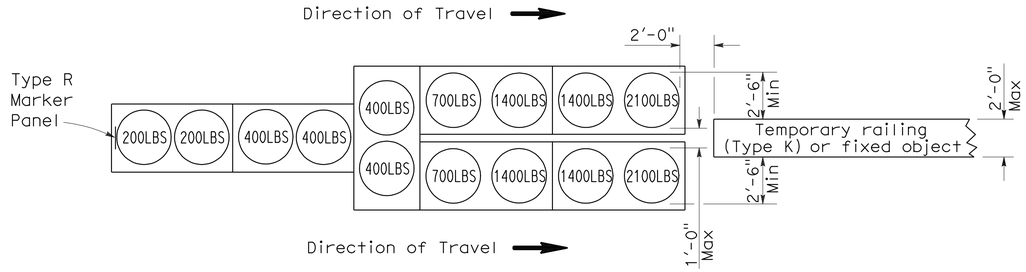

ARRAY 'TU14'

Approach speed 45 mph or more

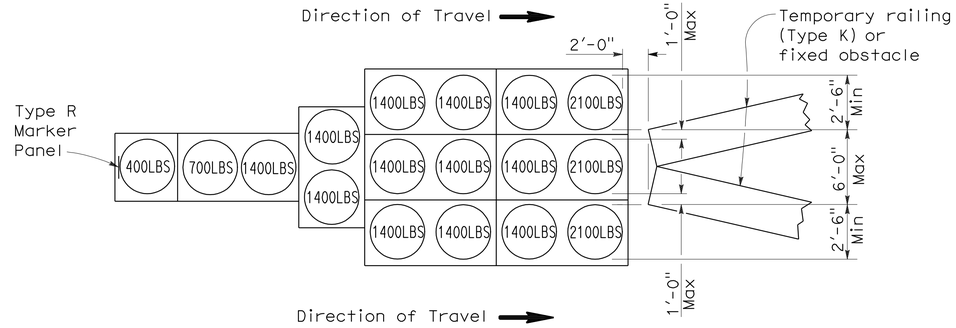

ARRAY 'TU17'

Approach speed less than 45 mph

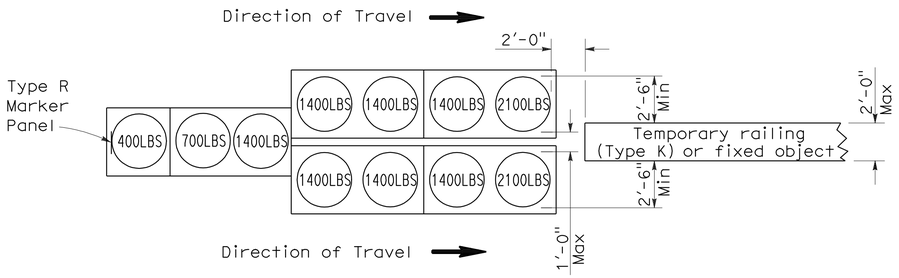

ARRAY 'TU11'

Approach speed less than 45 mph

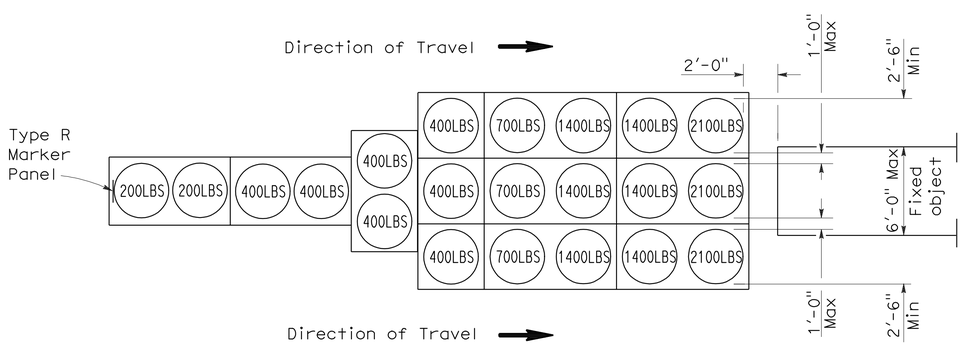

ARRAY 'TU21'

Approach speed 45 mph or more

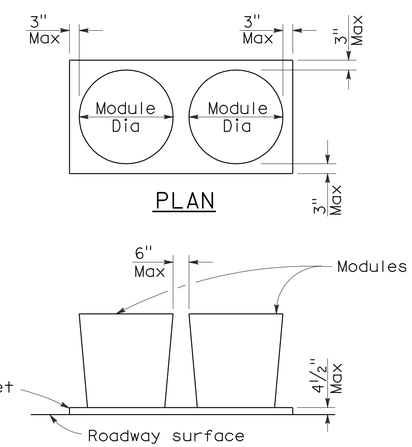

ELEVATION

CRASH CUSHION PALLET DETAIL

See Note 7

NOTES:

1. (XXX) Indicates sand filled module location and weight of sand in pounds for each module. Module spacing is based on the greater diameter of the module.
2. All sand weights are nominal.
3. Temporary crash cushion arrays shall not encroach on the traveled way.
4. Place the top of Type R marker panel 1" below the module lid.
5. Refer to Standard Plan A73B for marker details.
6. Approach speeds indicated conform to NCHRP 350 Report criteria.
7. Use of pallets is optional.

STATE OF CALIFORNIA
DEPARTMENT OF TRANSPORTATION

TEMPORARY CRASH CUSHION, SAND FILLED (UNIDIRECTIONAL)

NO SCALE

RSP T1A DATED JUNE 6, 2008 SUPERSEDES STANDARD PLAN T1A
DATED MAY 1, 2006 - PAGE 211 OF THE STANDARD PLANS BOOK DATED MAY 2006.

REVISED STANDARD PLAN RSP T1A

2006 REVISED STANDARD PLAN RSP T1A

5-15-08

DIST	COUNTY	ROUTE	POST MILES TOTAL PROJECT	SHEET NO.	TOTAL SHEETS
05	Mon	101	R12.6/R15.5	38	42

Randell D. Hiatt
REGISTERED CIVIL ENGINEER

June 6, 2008
PLANS APPROVAL DATE

REGISTERED PROFESSIONAL ENGINEER
Randell D. Hiatt
No. C50200
Exp. 6-30-09
CIVIL
STATE OF CALIFORNIA

The State of California or its officers or agents shall not be responsible for the accuracy or completeness of electronic copies of this plan sheet.

To accompany plans dated 11-2-09

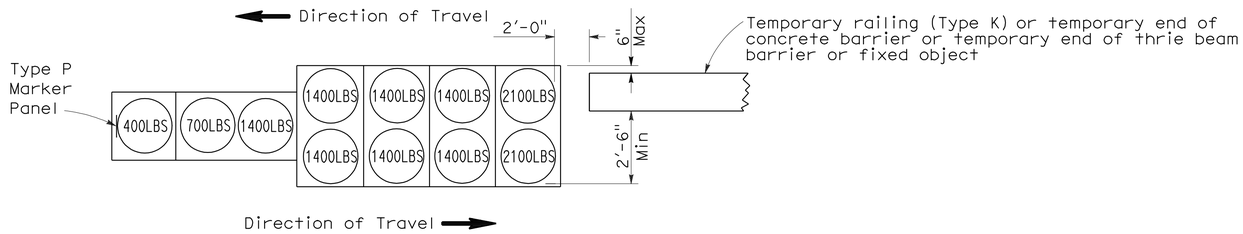

ARRAY 'TB11'

Approach speed less than 45 mph

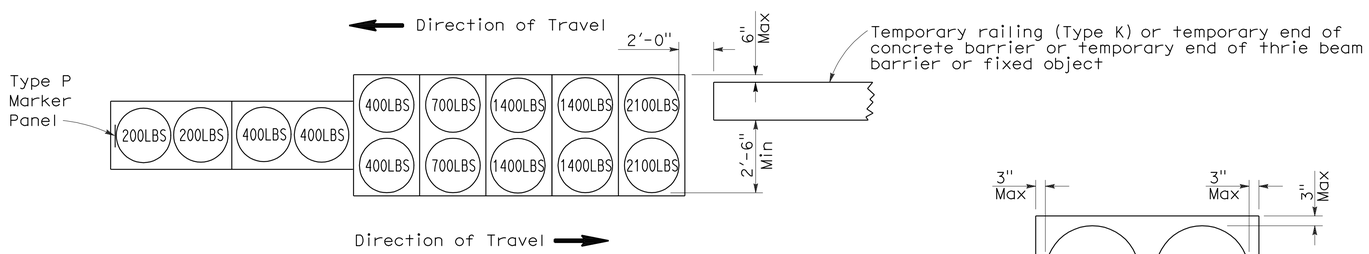

ARRAY 'TB14'

Approach speed 45 mph or more

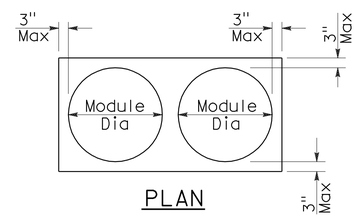

PLAN

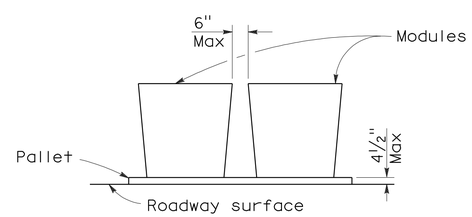

ELEVATION

CRASH CUSHION PALLET DETAIL

See Note 7

NOTES:

1. (XXX) Indicates sand filled module location and weight of sand in pounds for each module. Module spacing is based on the greater diameter of the module.
2. All sand weights are nominal.
3. Temporary crash cushion arrays shall not encroach on the traveled way.
4. Place the Type P marker panel so that the bottom of the panel rests upon the pallet.
5. Refer to Standard Plan A73B for marker details.
6. Approach speeds indicated conform to NCHRP 350 Report criteria.
7. Use of pallets is optional.

STATE OF CALIFORNIA
DEPARTMENT OF TRANSPORTATION

TEMPORARY CRASH CUSHION, SAND FILLED (BIDIRECTIONAL)

NO SCALE

RSP T1B DATED JUNE 6, 2008 SUPERSEDES STANDARD PLAN T1B
DATED MAY 1, 2006 - PAGE 212 OF THE STANDARD PLANS BOOK DATED MAY 2006.

REVISED STANDARD PLAN RSP T1B

2006 REVISED STANDARD PLAN RSP T1B

5-15-08

DIST	COUNTY	ROUTE	POST MILES TOTAL PROJECT	SHEET NO.	TOTAL SHEETS
05	Mon	101	R12.6/R15.5	39	42

Randell D. Hiatt
REGISTERED CIVIL ENGINEER

June 6, 2008
PLANS APPROVAL DATE

REGISTERED PROFESSIONAL ENGINEER
Randell D. Hiatt
No. C50200
Exp. 6-30-09
CIVIL
STATE OF CALIFORNIA

The State of California or its officers or agents shall not be responsible for the accuracy or completeness of electronic copies of this plan sheet.

To accompany plans dated 11-2-09

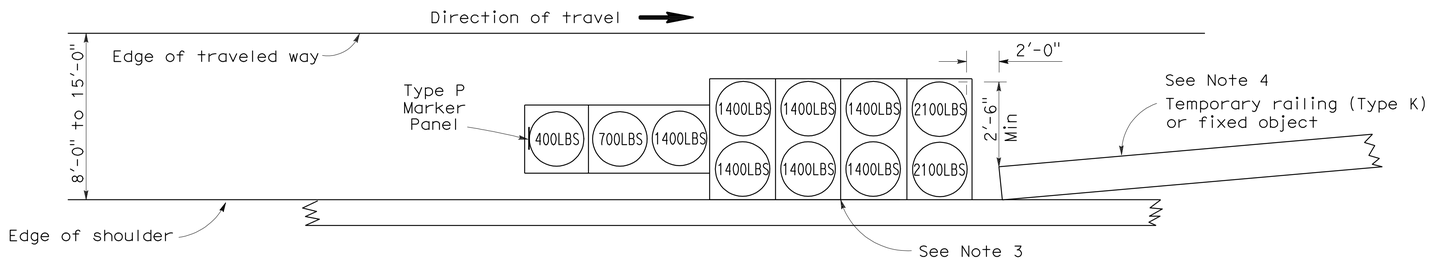

ARRAY 'TS11'

Approach speed less than 45 mph
See Note 9

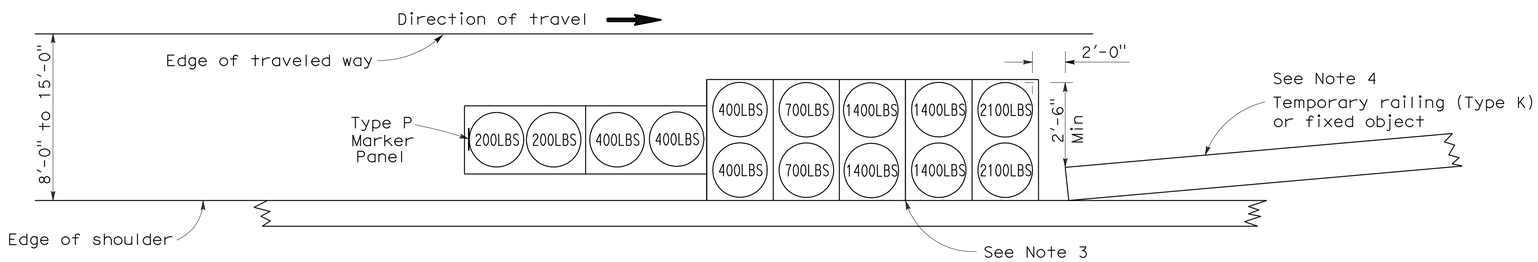

ARRAY 'TS14'

Approach speed 45 mph or more
See Note 9

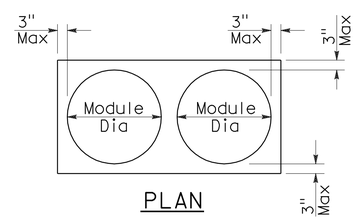

PLAN

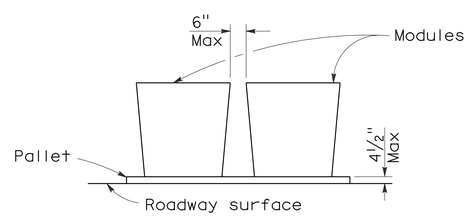

ELEVATION

CRASH CUSHION PALLET DETAIL

See Note 11

NOTES:

1. (XXX) Indicates sand filled module location and weight of sand in pounds for each module. Module spacing is based on the greater diameter of the module.
2. All sand weights are nominal.
3. The temporary crash cushion arrays shown on this plan shall be used only in locations where there will be traffic on one side of the temporary crash cushion array.
4. If the fixed object or approach end of the temporary railing is less than 15'-0" from the edge of traveled way, a temporary crash cushion is required in a construction or work zone.
5. Temporary crash cushion arrays shall not encroach on the traveled way.
6. Arrays for median shoulders shall conform to details shown on this plan for outside shoulders.
7. Place the Type P marker panel so that the bottom of the panel rests upon the pallet and faces traffic.
8. Refer to Standard Plan A73B for marker details.
9. For shoulder widths less than 8'-0", appropriate approved crash cushion protection, other than sand filled modules, shall be provided at fixed objects and at approach ends of temporary railing. The specific type of crash cushion shall be as shown on the project plans or as specified in the Special Provisions, or if not shown on the project plans or specified in the Special Provisions, shall be as approved by the Engineer.
10. Approach speeds indicated conform to NCHRP 350 Report criteria.
11. Use of pallets is optional.

STATE OF CALIFORNIA
DEPARTMENT OF TRANSPORTATION

TEMPORARY CRASH CUSHION, SAND FILLED (SHOULDER INSTALLATIONS)

NO SCALE

RSP T2 DATED JUNE 6, 2008 SUPERSEDES STANDARD PLAN T2
DATED MAY 1, 2006 - PAGE 213 OF THE STANDARD PLANS BOOK DATED MAY 2006.

REVISED STANDARD PLAN RSP T2

2006 REVISED STANDARD PLAN RSP T2

5-15-08

DIST	COUNTY	ROUTE	POST MILES TOTAL PROJECT	SHEET NO.	TOTAL SHEETS
05	Mon	101	R12.6/R15.5	40	42

REGISTERED CIVIL ENGINEER

November 17, 2006
PLANS APPROVAL DATE

REGISTERED PROFESSIONAL ENGINEER
Greg W. Edwards
No. C36386
Exp. 6-30-08
CIVIL
STATE OF CALIFORNIA

The State of California or its officers or agents shall not be responsible for the accuracy or completeness of electronic copies of this plan sheet.

To accompany plans dated 11-2-09

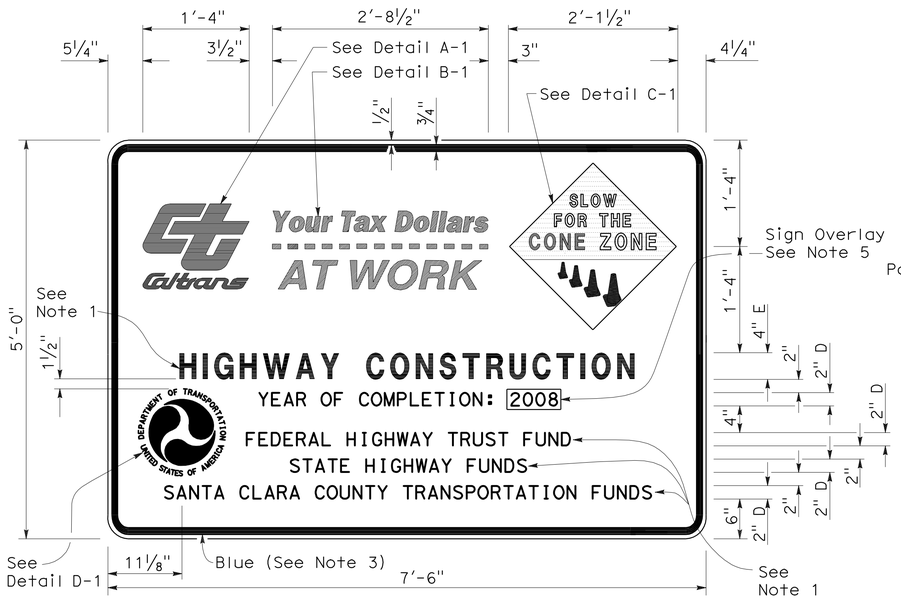

TYPE 1

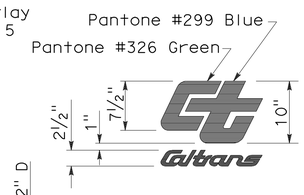

DETAIL A-1

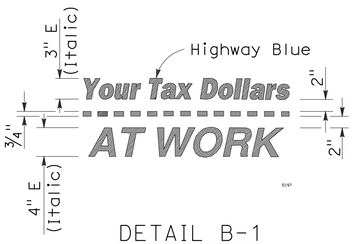

DETAIL B-1
(See Note 3)

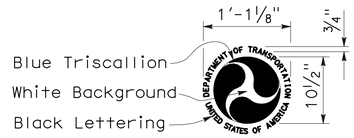

DETAIL D-1
(See Note 6)

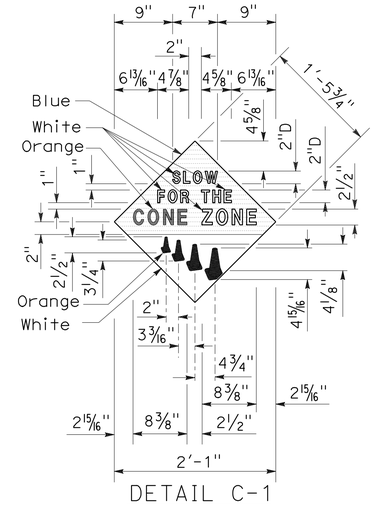

DETAIL C-1
(See Note 4)

NOTES:

1. The sign messages shown for type of project and fund types are examples only. See the Special Provisions for the applicable type of project and fund type messages to be used.
2. Except as otherwise shown, the legend of sign shall be black on a white background (non-reflective).
3. The border of the signs and details "B-1" and "B-2" shall be blue (non-reflective).
4. The diamond in details "C-1" and "C-2" shall be blue for the background of message, " SLOW FOR THE CONE ZONE", and white background for the orange cones. The color and type of font for the "SLOW FOR THE CONE ZONE" message shall be: "SLOW" white D; "FOR THE" white D; "CONE" orange Arial font; "ZONE" white Arial font.
5. Year of completion of project construction shown on the overlay is an example only. See the Special Provisions.
6. Use when the Project involves Federal Highway Trust Fund.

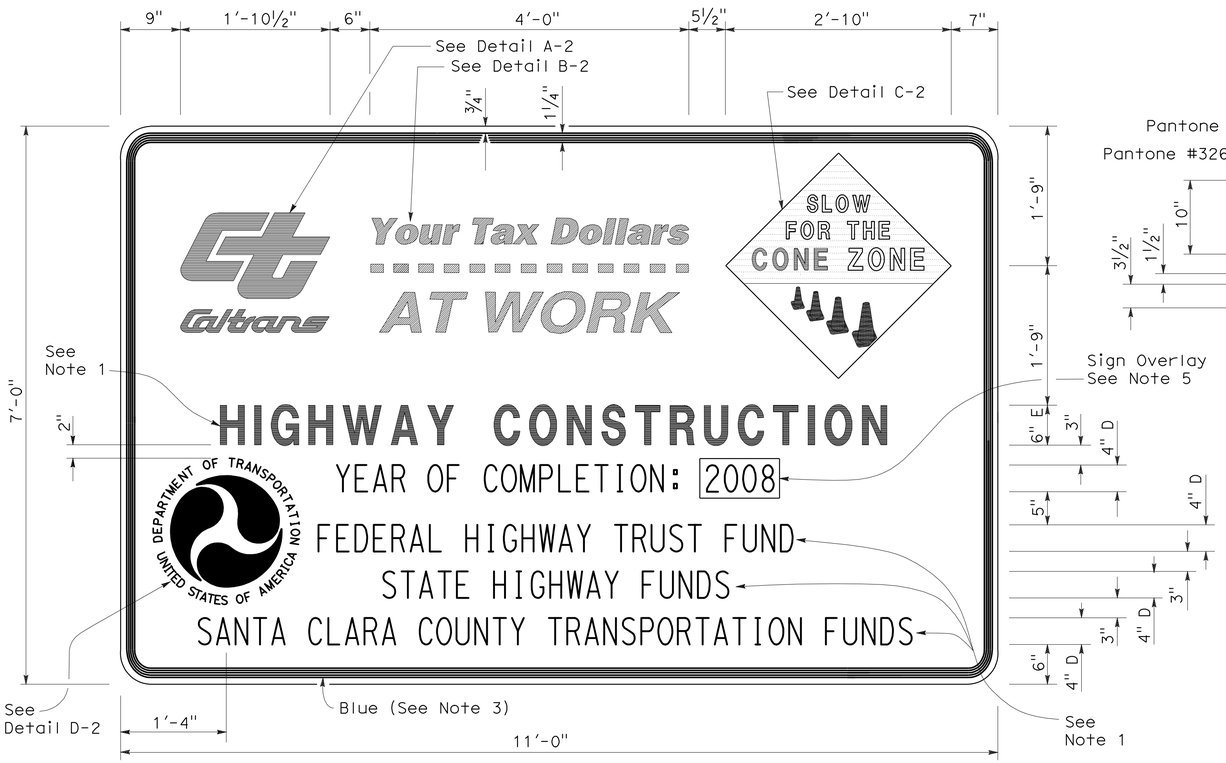

TYPE 2

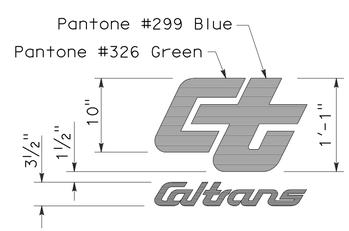

DETAIL A-2

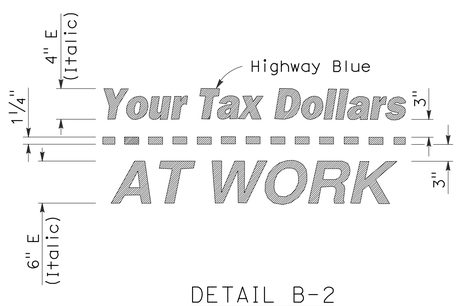

DETAIL B-2
(See Note 3)

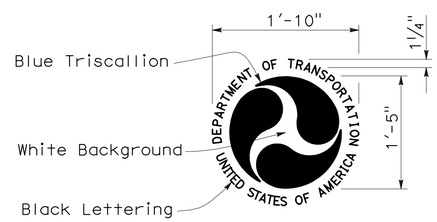

DETAIL D-2
(See Note 6)

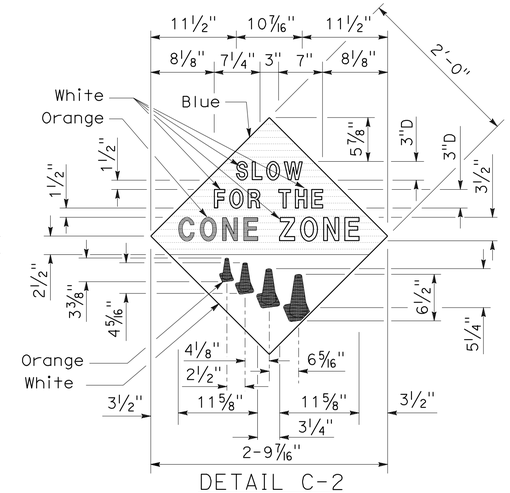

DETAIL C-2
(See Note 4)

STATE OF CALIFORNIA
DEPARTMENT OF TRANSPORTATION

CONSTRUCTION PROJECT FUNDING IDENTIFICATION SIGNS

NO SCALE

RSP T7 DATED NOVEMBER 17, 2006 SUPERSEDES STANDARD PLAN T7
DATED MAY 1, 2006 - PAGE 217 OF THE STANDARD PLANS BOOK DATED MAY 2006.

REVISED STANDARD PLAN RSP T7

2006 REVISED STANDARD PLAN RSP T7

9-7-06

DIST	COUNTY	ROUTE	POST MILES TOTAL PROJECT	SHEET NO.	TOTAL SHEETS
05	Mon	101	R12.6/R15.5	41	42

Robert B Schott
LICENSED LANDSCAPE ARCHITECT

August 15, 2008
PLANS APPROVAL DATE

LICENSED LANDSCAPE ARCHITECT Robert B. Schott 3625 Signature 11-04-08 Renewal Date 08-11-08 Date STATE OF CALIFORNIA

The State of California or its officers or agents shall not be responsible for the accuracy or completeness of electronic copies of this plan sheet.

To accompany plans dated 11-2-09

FLEXIBLE SEDIMENT BARRIER SPACING TABLE

SLOPE OF ROADWAY (PERCENT)	0 to 0.9	1 to 1.9	2 to 2.9	3 to 4	5+
INTERVAL BETWEEN BARRIERS	50′	35′	30′	25′	20′
ANGLE FROM FACE OF CURB	70°	70°	70°	45°	45°
SUGGESTED BARRIER LENGTH	6′	6′	6′	6′	6′

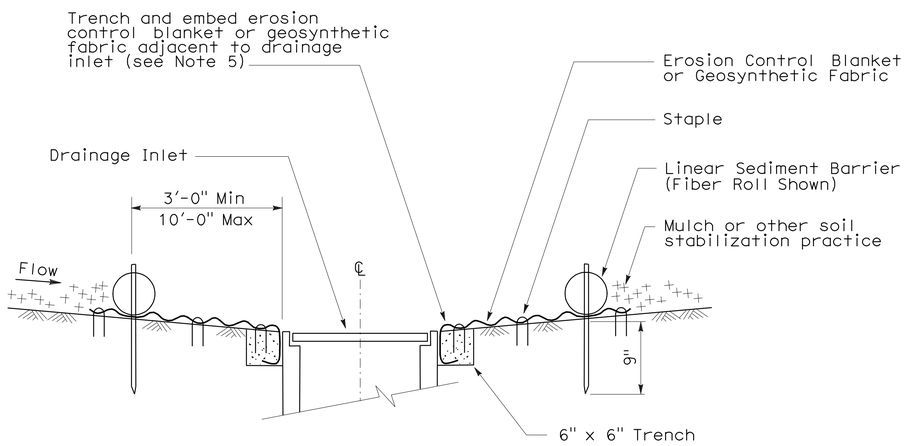

SECTION A-A

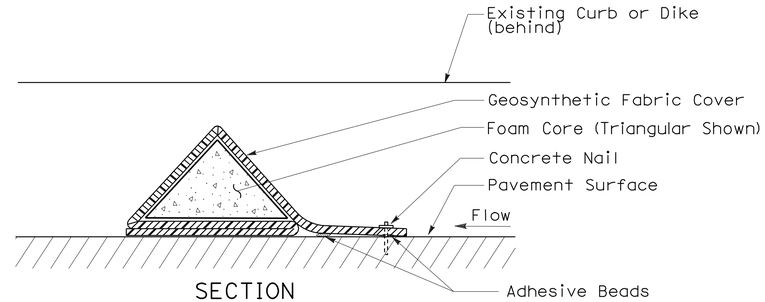

SECTION

FLEXIBLE SEDIMENT BARRIER DETAIL (FOAM BARRIER SHOWN)

NOTES:

1. See Standard Plan T51 for Temporary Silt Fence.
2. Dimensions may vary to fit field conditions.
3. Install a minimum of 3 flexible sediment barriers upstream of each drainage inlet to be protected.
4. Position erosion control blanket or geosynthetic fabric at edge of concrete apron and secure in trench.
5. Erosion control blanket or geosynthetic fabric is not required if the area adjacent to the drainage inlet is vegetated.

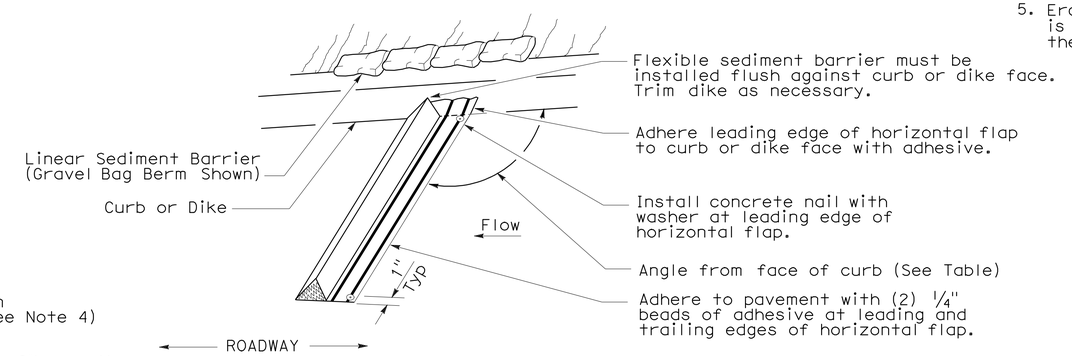

PERSPECTIVE

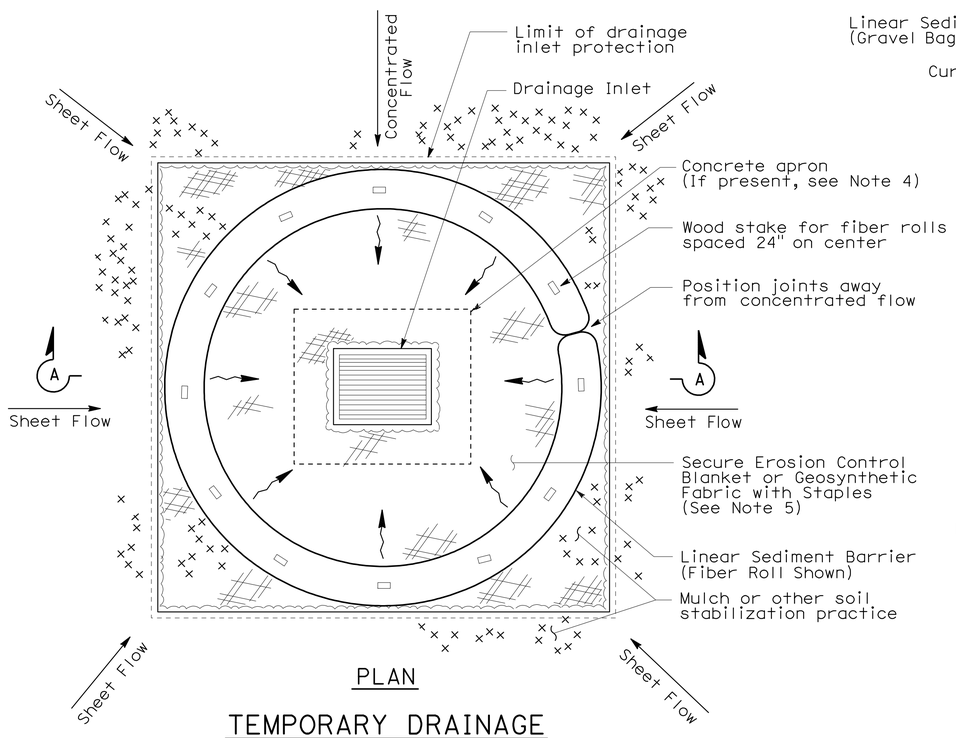

PLAN

TEMPORARY DRAINAGE INLET PROTECTION (TYPE 4A)

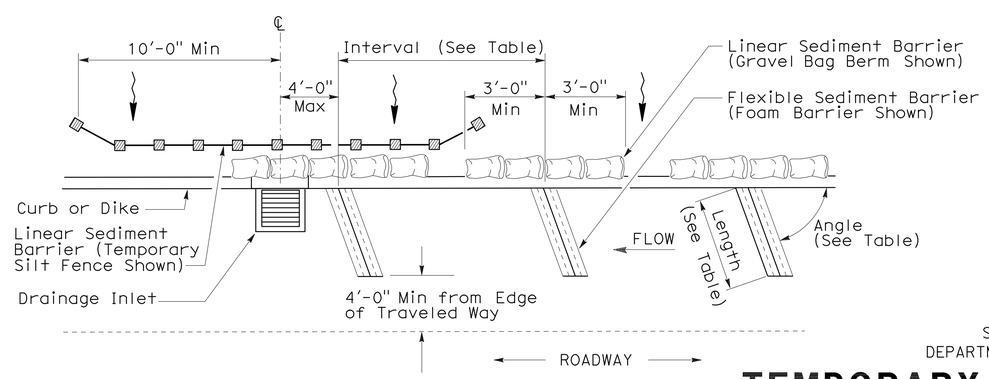

PLAN

TEMPORARY DRAINAGE INLET PROTECTION (TYPE 4B) FLEXIBLE SEDIMENT BARRIER

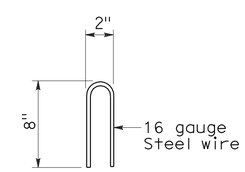

STAPLE DETAIL

STATE OF CALIFORNIA
DEPARTMENT OF TRANSPORTATION

TEMPORARY WATER POLLUTION CONTROL DETAILS (TEMPORARY DRAINAGE INLET PROTECTION)

NO SCALE

NSP T63 DATED AUGUST 15, 2008 SUPPLEMENTS THE STANDARD PLANS BOOK DATED MAY 2006.

NEW STANDARD PLAN NSP T63

2006 NEW STANDARD PLAN NSP T63

7-11-08

DIST	COUNTY	ROUTE	POST MILES TOTAL PROJECT	SHEET NO.	TOTAL SHEETS
05	Mon	101	R12.6/R15.5	42	42

LICENSED LANDSCAPE ARCHITECT

April 3, 2009
PLANS APPROVAL DATE

LICENSED LANDSCAPE ARCHITECT — Robert B. Schott — 3025 — Signature — 11-30-10 Renewal Date — 2-25-09 Date — STATE OF CALIFORNIA

The State of California or its officers or agents shall not be responsible for the accuracy or completeness of electronic copies of this plan sheet.

To accompany plans dated 11-2-09

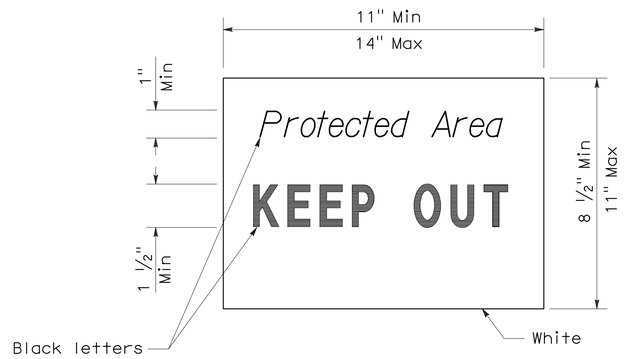

SIGN DETAIL

NOTE:

1. Temporary silt fence and temporary straw bale barrier shown for reference purposes only.

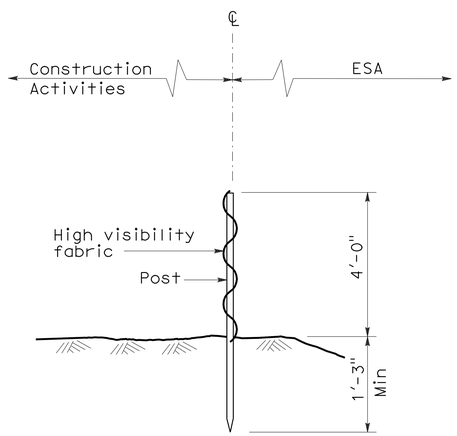

SECTION
TEMPORARY FENCE (TYPE ESA)

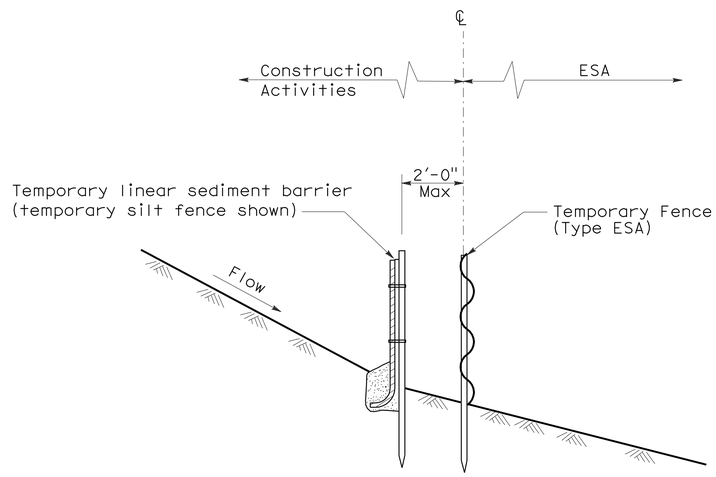

SECTION
PLACEMENT DETAIL
FOR TEMPORARY LINEAR SEDIMENT BARRIER
USED WITH TEMPORARY
FENCE (TYPE ESA)
(See Note 1)

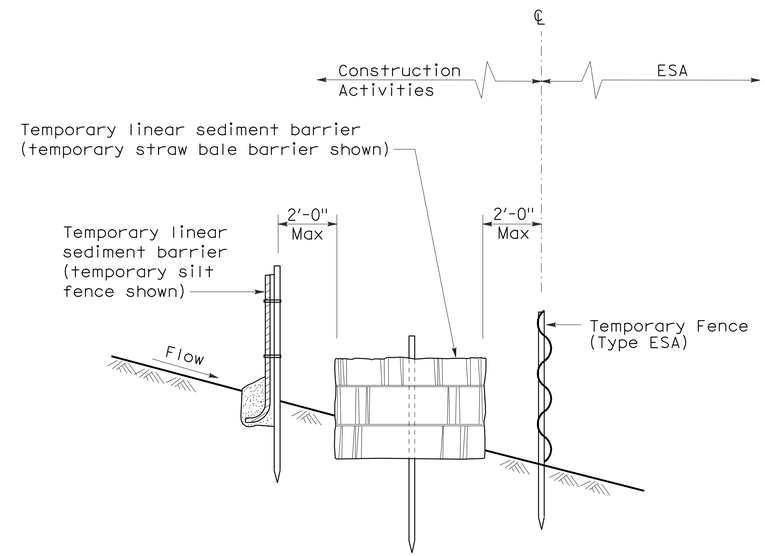

SECTION
PLACEMENT DETAIL
FOR TEMPORARY SILT FENCE
AND TEMPORARY STRAW BALE BARRIER
USED WITH TEMPORARY FENCE (TYPE ESA)
(See Note 1)

STATE OF CALIFORNIA
DEPARTMENT OF TRANSPORTATION

TEMPORARY WATER POLLUTION CONTROL DETAILS [TEMPORARY FENCE (TYPE ESA)]

NO SCALE

NSP T65 DATED APRIL 3, 2009 SUPPLEMENTS
THE STANDARD PLANS BOOK DATED MAY 2006.

NEW STANDARD PLAN NSP T65

2006 NEW STANDARD PLAN NSP T65