Dist	COUNTY	ROUTE	POST MILES TOTAL PROJECT	SHEET No.	TOTAL SHEETS
05	Mon	1	12.1	1	26

INDEX OF PLANS

SHEET No.	DESCRIPTION
1	TITLE AND LOCATION MAP
2-3	TYPICAL CROSS SECTIONS
4	LAYOUT
5	CONSTRUCTION DETAILS
6	TEMPORARY WATER POLLUTION CONTROL DETAILS
7-11	DRAINAGE PLANS, PROFILES, DETAILS AND QUANTITIES
12	UTILITY PLANS
13	CONSTRUCTION AREA SIGNS
14-16	STAGE CONSTRUCTION PLANS AND TRAFFIC HANDLING PLANS
17	PAVEMENT DELINEATION PLAN
18	SUMMARY OF QUANTITIES
19-26	REVISED AND NEW STANDARD PLANS

THE STANDARD PLANS LIST APPLICABLE TO THIS CONTRACT IS INCLUDED IN THE NOTICE TO BIDDERS AND SPECIAL PROVISIONS BOOK.

STATE OF CALIFORNIA

DEPARTMENT OF TRANSPORTATION

PROJECT PLANS FOR CONSTRUCTION ON

STATE HIGHWAY

IN MONTEREY COUNTY
NEAR GORDA
AT NORTH WILLOW SIDEHILL VIADUCT

TO BE SUPPLEMENTED BY STANDARD PLANS DATED MAY 2006

LOCATION MAP

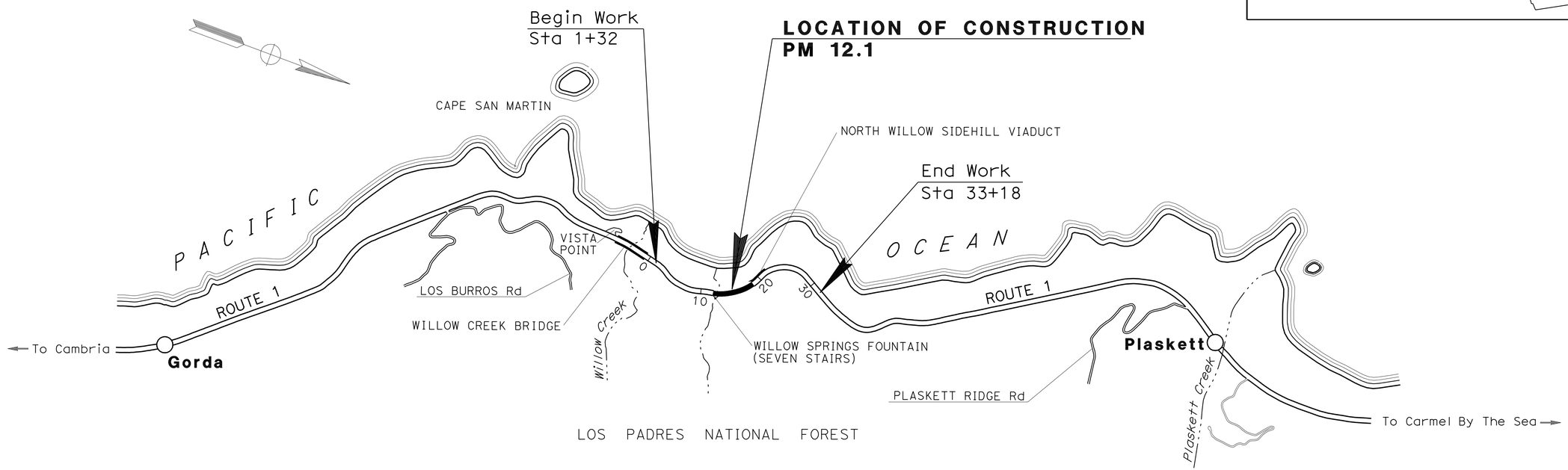

NO SCALE

THE CONTRACTOR SHALL POSSESS THE CLASS (OR CLASSES) OF LICENSE AS SPECIFIED IN THE "NOTICE TO BIDDERS."

PROJECT MANAGER: KEN DOSTALEK

DESIGN ENGINEER: MARK S LEICHTFUSS

Mark S. Leichtfuss 12-03-08
PROJECT ENGINEER DATE
REGISTERED CIVIL ENGINEER

December 14, 2009
PLANS APPROVAL DATE

REGISTERED PROFESSIONAL ENGINEER MARK S. LEICHTFUSS No. 69124 Exp. 6/30/10 CIVIL STATE OF CALIFORNIA

THE STATE OF CALIFORNIA OR ITS OFFICERS OR AGENTS SHALL NOT BE RESPONSIBLE FOR THE ACCURACY OR COMPLETENESS OF SCANNED COPIES OF THIS PLAN SHEET.

CONTRACT No. **05-0P3204**

LAST REVISION 12-03-08

DATE PLOTTED => 22-DEC-2009
TIME PLOTTED => 07:53

Dist	COUNTY	ROUTE	POST MILES TOTAL PROJECT	SHEET No.	TOTAL SHEETS
05	Mon	1	12.1	2	26

REGISTERED CIVIL ENGINEER 12-03-08 DATE

12-14-09
PLANS APPROVAL DATE

REGISTERED PROFESSIONAL ENGINEER MARK S. LEICHTFUSS No. 69124 Exp. 6-30-10 CIVIL STATE OF CALIFORNIA

THE STATE OF CALIFORNIA OR ITS OFFICERS OR AGENTS SHALL NOT BE RESPONSIBLE FOR THE ACCURACY OR COMPLETENESS OF SCANNED COPIES OF THIS PLAN SHEET.

NOTES:
1. DIMENSIONS OF THE PAVEMENT STRUCTURES (STRUCTURAL SECTIONS) ARE SUBJECT TO TOLERANCES SPECIFIED IN THE STANDARD SPECIFICATIONS.
2. SUPERELVATION AS SHOWN OR AS DIRECTED BY THE ENGINEER.
3. FOR EXACT DIKE LOCATIONS SEE LAYOUT SHEET.

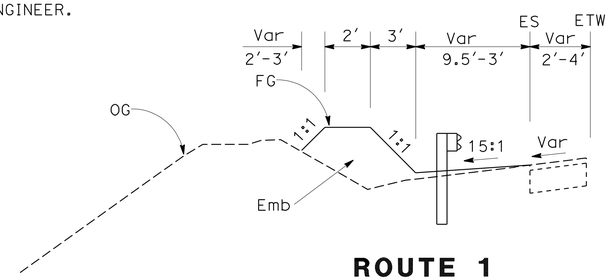

ROUTE 1
Sta "A" 17+50 TO Sta 18+25

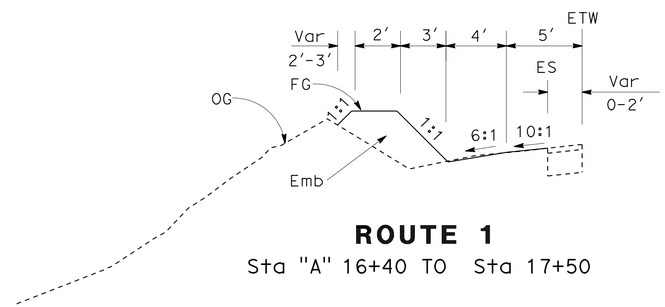

ROUTE 1
Sta "A" 16+40 TO Sta 17+50

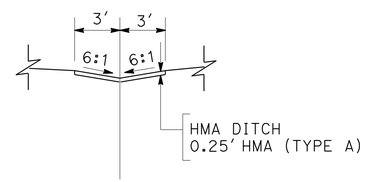

Sta "A" 12+05 TO Sta 16+40

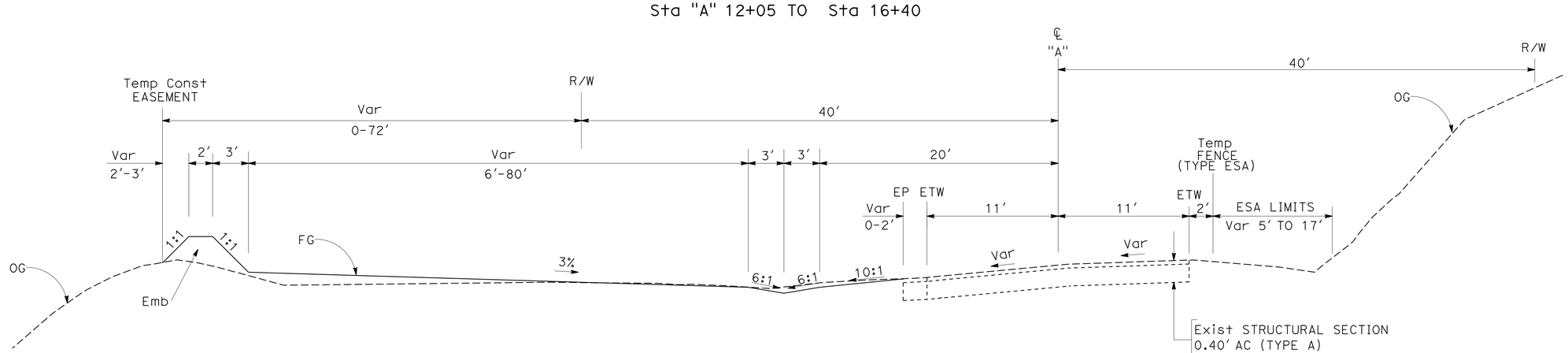

ROUTE 1
Sta "A" 12+05 TO Sta 16+40

TYPICAL CROSS SECTIONS

NO SCALE

X-1

STATE OF CALIFORNIA - DEPARTMENT OF TRANSPORTATION
Caltrans®
DESIGN

FUNCTIONAL SUPERVISOR: RON R. KRAEMER

CALCULATED-DESIGNED BY: MARK S. LEICHTFUSS
CHECKED BY: AMJED HETTINI

REVISED BY
DATE REVISED

LAST REVISION 12-03-08
DATE PLOTTED => 22-DEC-2009
TIME PLOTTED => 07:53

Dist	COUNTY	ROUTE	POST MILES TOTAL PROJECT	SHEET No.	TOTAL SHEETS
05	Mon	1	12.1	3	26

REGISTERED CIVIL ENGINEER 12-03-08 DATE

12-14-09
PLANS APPROVAL DATE

REGISTERED PROFESSIONAL ENGINEER MARK S. LEICHTFUSS No. 69124 Exp. 6-30-10 CIVIL STATE OF CALIFORNIA

THE STATE OF CALIFORNIA OR ITS OFFICERS OR AGENTS SHALL NOT BE RESPONSIBLE FOR THE ACCURACY OR COMPLETENESS OF SCANNED COPIES OF THIS PLAN SHEET.

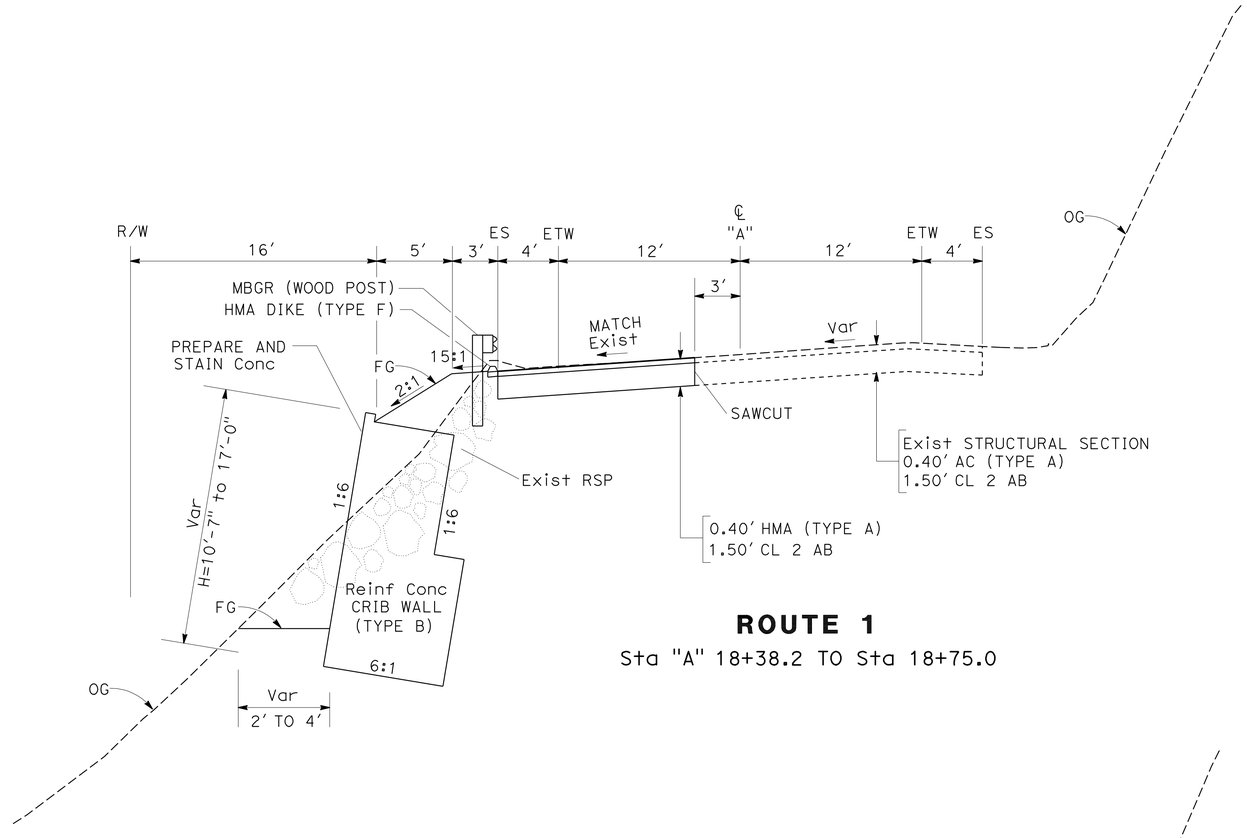

ROUTE 1

Sta "A" 18+38.2 TO Sta 18+75.0

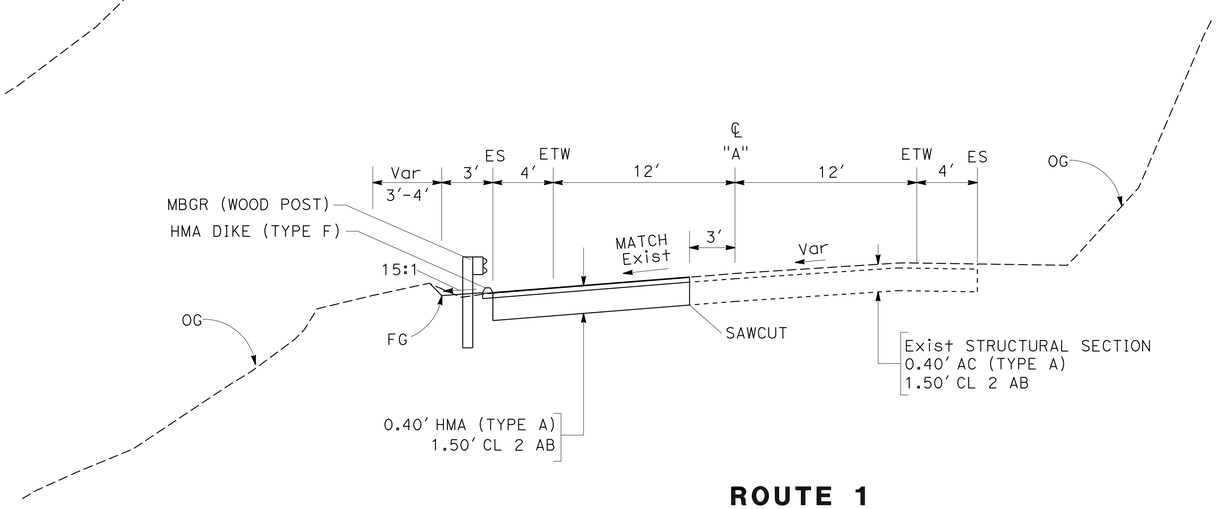

ROUTE 1

Sta "A" 18+25 TO Sta 18+38.2

TYPICAL CROSS SECTIONS

NO SCALE

X-2

STATE OF CALIFORNIA - DEPARTMENT OF TRANSPORTATION
Caltrans
DESIGN

FUNCTIONAL SUPERVISOR: RON R. KRAEMER

CALCULATED-DESIGNED BY: MARK S. LEICHTFUSS
CHECKED BY: AMJED HETTINI

REVISED BY
DATE REVISED

LAST REVISION 12-03-08 DATE PLOTTED => 22-DEC-2009 TIME PLOTTED => 07:54

Dist	COUNTY	ROUTE	POST MILES TOTAL PROJECT	SHEET No.	TOTAL SHEETS
05	Mon	1	12.1	4	26

REGISTERED CIVIL ENGINEER 12-2-08 DATE

12-14-09
PLANS APPROVAL DATE

REGISTERED PROFESSIONAL ENGINEER MARK S. LEICHTFUSS No. 69124 Exp. 6-30-10 CIVIL STATE OF CALIFORNIA

THE STATE OF CALIFORNIA OR ITS OFFICERS OR AGENTS SHALL NOT BE RESPONSIBLE FOR THE ACCURACY OR COMPLETENESS OF SCANNED COPIES OF THIS PLAN SHEET.

NOTES:
1. FOR COMPLETE RIGHT OF WAY DATA, SEE RIGHT OF WAY RECORD MAPS AT DISTRICT OFFICE.
2. PROTECT MASONARY STONE WALL, HEADWALL, AND STAIRS FROM ALL CONSTRUCTION ACTIVITIES
3. PLACE ESA FENCE ALONG NB SHOULDER OR AS DIRECTED BY ENGINEER.
4. SEE DRAINAGE PLANS FOR DRAINAGE INFORMATION.

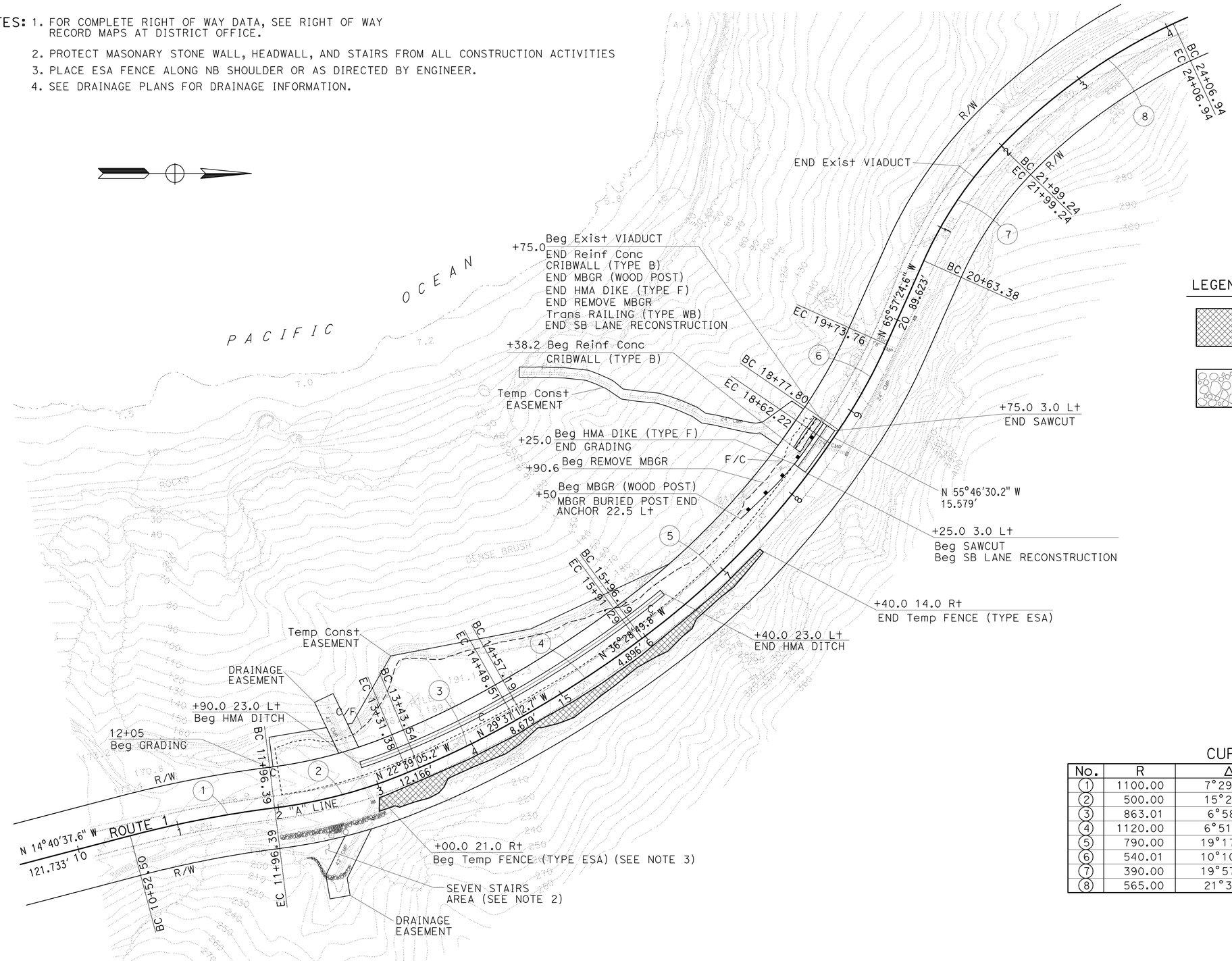

LEGEND

ENVIRONMENTALLY SENSITIVE AREA (ESA)

EXIST MASONARY STONE

CURVE DATA

No.	R	Δ	T	L
1	1100.00	7°29'40"	72.04	143.88
2	500.00	15°28'7"	67.91	134.99
3	863.01	6°58'7"	52.55	104.96
4	1120.00	6°51'37"	67.13	134.10
5	790.00	19°17'40"	134.29	266.04
6	540.01	10°10'54"	48.11	95.96
7	390.00	19°57'32"	68.62	135.86
8	565.00	21°3'44"	105.03	207.70

LAYOUT

SCALE 1" = 50'

L-1

STATE OF CALIFORNIA - DEPARTMENT OF TRANSPORTATION
Caltrans
DESIGN

FUNCTIONAL SUPERVISOR: RON R. KRAEMER
CALCULATED-DESIGNED BY: MARK S. LEICHTFUSS
CHECKED BY: AMJED HETTINI
REVISED BY
DATE REVISED

LAST REVISION 12-23-08
DATE PLOTTED => 22-DEC-2009
TIME PLOTTED => 07:54

Dist	COUNTY	ROUTE	POST MILES TOTAL PROJECT	SHEET No.	TOTAL SHEETS
05	Mon	1	12.1	5	26

REGISTERED CIVIL ENGINEER 12-03-08 DATE

12-14-09
PLANS APPROVAL DATE

REGISTERED PROFESSIONAL ENGINEER MARK S. LEICHTFUSS No. 69124 Exp. 6-30-10 CIVIL STATE OF CALIFORNIA

THE STATE OF CALIFORNIA OR ITS OFFICERS OR AGENTS SHALL NOT BE RESPONSIBLE FOR THE ACCURACY OR COMPLETENESS OF SCANNED COPIES OF THIS PLAN SHEET.

NOTES:
1. SEE UTILITY PLAN U-1 FOR ADDITIONAL INFORMATION
2. SEE LAYOUT PLAN L-1 FOR MBGR INFORMATION
3. STRUCTURE BACKFILL (CRIB WALL) SHALL BE TYPE E

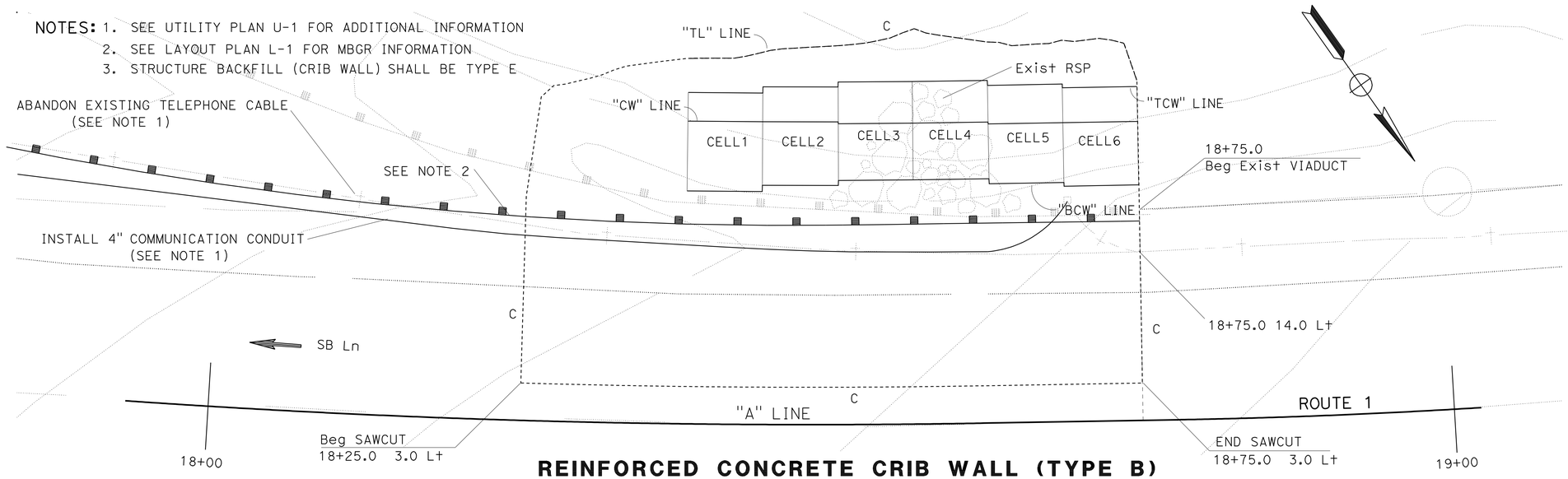

LEGEND

"CW" = TOP OF CRIB WALL
"TCW" = TOE OF CRIB WALL BENCH
"BCW" = BACK EDGE OF CRIB WALL BENCH
"TL" = TOE LINE

REINFORCED CONCRETE CRIB WALL (TYPE B)

Sta "A" 18+38.2 TO 18+75.0
SCALE: 1"=5'

CELL	H	OFFSET FROM "CW" TO "A"	"CW" Elev	OFFSET FROM "TCW" TO "A"	"TCW" Elev	OFFSET FROM "BCW" TO "A"	"BCW" Elev
1	10'-7"	24.3 Lt	211.2	26.6 Lt	201.4	18.7 Lt	200.0
2	13'-4"	24.3 Lt	211.2	27.1 Lt	198.7	19.2 Lt	197.3
3	17'-0"	24.2 Lt	212.1	27.5 Lt	195.9	19.6 Lt	194.6
4	17'-0"	24.2 Lt	212.1	27.5 Lt	195.9	19.6 Lt	194.6
5	15'-2"	24.0 Lt	213.0	27.1 Lt	198.6	19.2 Lt	197.3
6	13'-4"	24.0 Lt	213.0	26.8 Lt	200.5	18.9 Lt	199.1

NOTE: FOR DETAILS NOT SHOWN, SEE STANDARD PLAN C7A

STATION	OFFSET FROM "TL" TO "A"	"TL" Elev
18+38.20	29.3 Lt	205.0
18+44.38	29.9 Lt	203.9
18+50.63	30.6 Lt	201.2
18+56.78	31.7 Lt	198.4
18+63.00	30.6 Lt	201.1
18+69.00	30.6 Lt	203.0
18+75.00	26.8 Lt	204.1

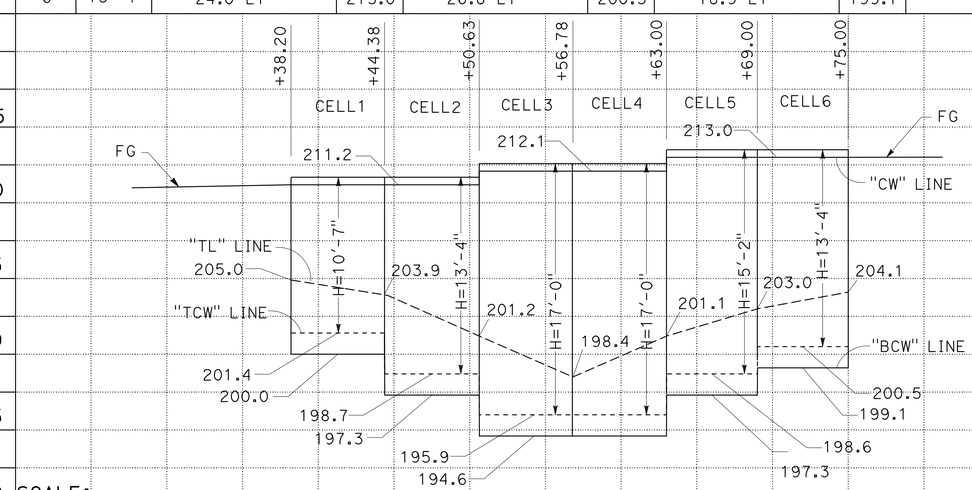

REINFORCED CONCRETE CRIB WALL (TYPE B) PROFILE

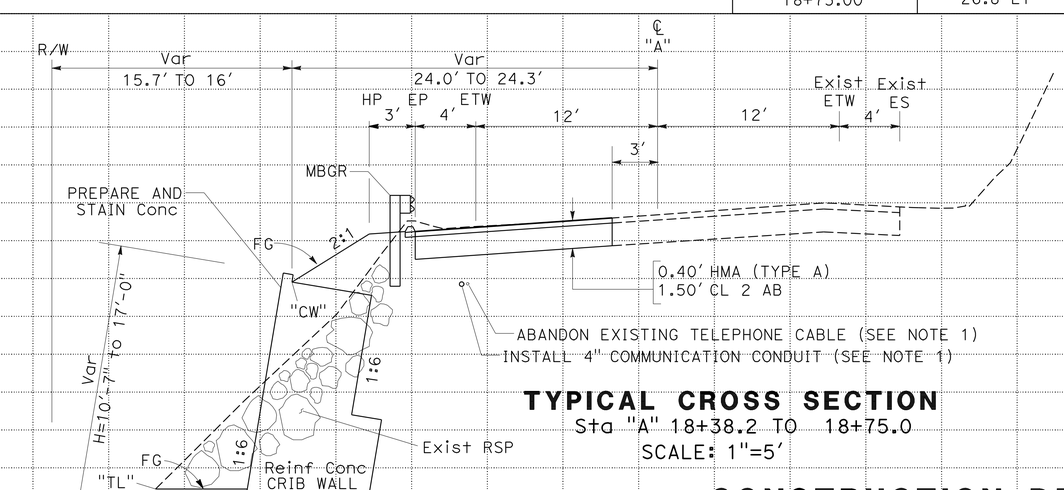

TYPICAL CROSS SECTION

Sta "A" 18+38.2 TO 18+75.0
SCALE: 1"=5'

CONSTRUCTION DETAIL

SCALE AS SHOWN

C-1

TOTAL

STATE OF CALIFORNIA - DEPARTMENT OF TRANSPORTATION
DESIGN
FUNCTIONAL SUPERVISOR RON R. KRAEMER
CALCULATED-DESIGNED BY MARK S. LEICHTFUSS
CHECKED BY AMJED HETTINI
REVISED BY
DATE REVISED

LAST REVISION 12-03-08
DATE PLOTTED => 22-DEC-2009
TIME PLOTTED => 07:54

Dist	COUNTY	ROUTE	POST MILES TOTAL PROJECT	SHEET No.	TOTAL SHEETS
05	Mon	1	12.1	6	26

REGISTERED CIVIL ENGINEER 12-03-08 DATE

12-14-09
PLANS APPROVAL DATE

REGISTERED PROFESSIONAL ENGINEER MARK S. LEICHTFUSS No. 69124 Exp. 6-30-10 CIVIL STATE OF CALIFORNIA

THE STATE OF CALIFORNIA OR ITS OFFICERS OR AGENTS SHALL NOT BE RESPONSIBLE FOR THE ACCURACY OR COMPLETENESS OF SCANNED COPIES OF THIS PLAN SHEET.

NOTES: 1. DIMENSIONS MAY VARY TO FIT FIELD CONDITIONS.

2. IF HMA APRON IS PRESENT, POSITION FIBER ROLL AT EDGE OF HMA APRON.

LEGEND

× MULCH OR OTHER SOIL STABILIZATION PRACTICE

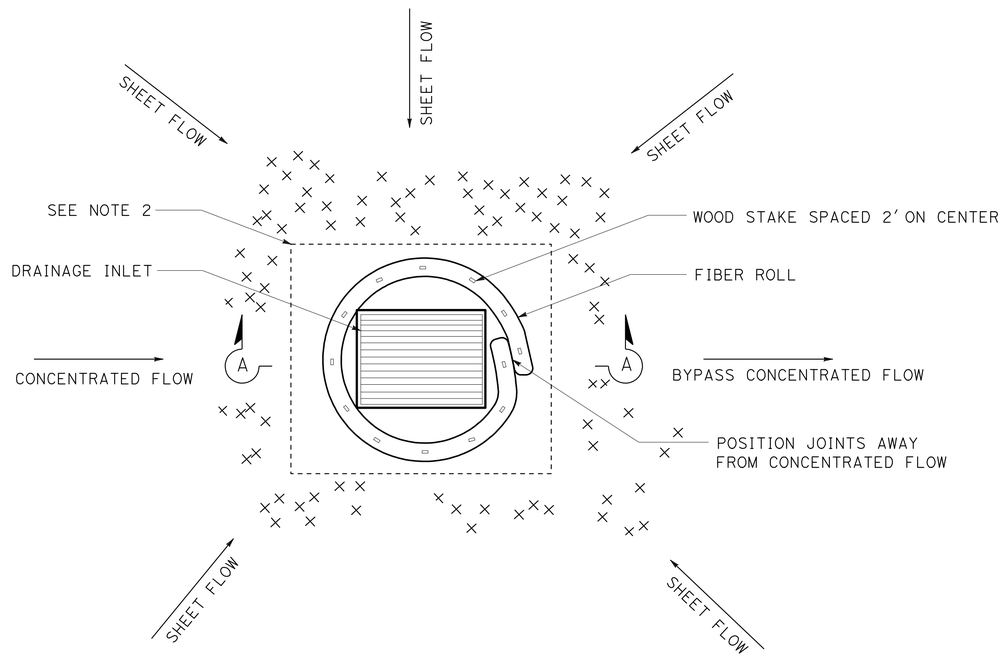

DRAIN INLET PROTECTION TYPE 4A (mod)

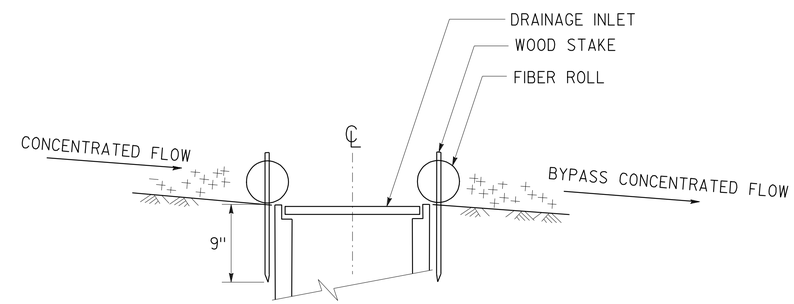

SECTION A-A

TEMPORARY WATER POLLUTION CONTROL DETAILS (TEMPORARY DRAINAGE INLET PROTECTION)

NO SCALE

THIS PLAN ACCURATE FOR TEMPORARY WATER POLLUTION CONTROL WORK ONLY.

WPCD-1

STATE OF CALIFORNIA - DEPARTMENT OF TRANSPORTATION
Caltrans®
DESIGN

FUNCTIONAL SUPERVISOR: RON R. KRAEMER

CALCULATED-DESIGNED BY: MARK S. LEICHTFUSS
CHECKED BY: AMJED HETTINI

REVISED BY
DATE REVISED

LAST REVISION 12-03-08
DATE PLOTTED => 22-DEC-2009
TIME PLOTTED => 07:54

Dist	COUNTY	ROUTE	POST MILES TOTAL PROJECT	SHEET No.	TOTAL SHEETS
05	Mon	1	12.1	7	26

REGISTERED CIVIL ENGINEER — DATE 12-03-08

12-14-09
PLANS APPROVAL DATE

REGISTERED PROFESSIONAL ENGINEER — MARK S. LEICHTFUSS No. 69124 Exp. 6-30-10 CIVIL — STATE OF CALIFORNIA

THE STATE OF CALIFORNIA OR ITS OFFICERS OR AGENTS SHALL NOT BE RESPONSIBLE FOR THE ACCURACY OR COMPLETENESS OF SCANNED COPIES OF THIS PLAN SHEET.

NOTES:

1. FOR COMPLETE RIGHT OF WAY DATA, SEE RIGHT OF WAY RECORD MAPS AT DISTRICT OFFICE.
2. PROTECT EXISTING STONE WALL, HEADWALL, AND STAIRS FROM ALL CONSTRUCTION ACTIVITIES.
3. Exist DOWN DRAIN ON SLOPE SURFACE.

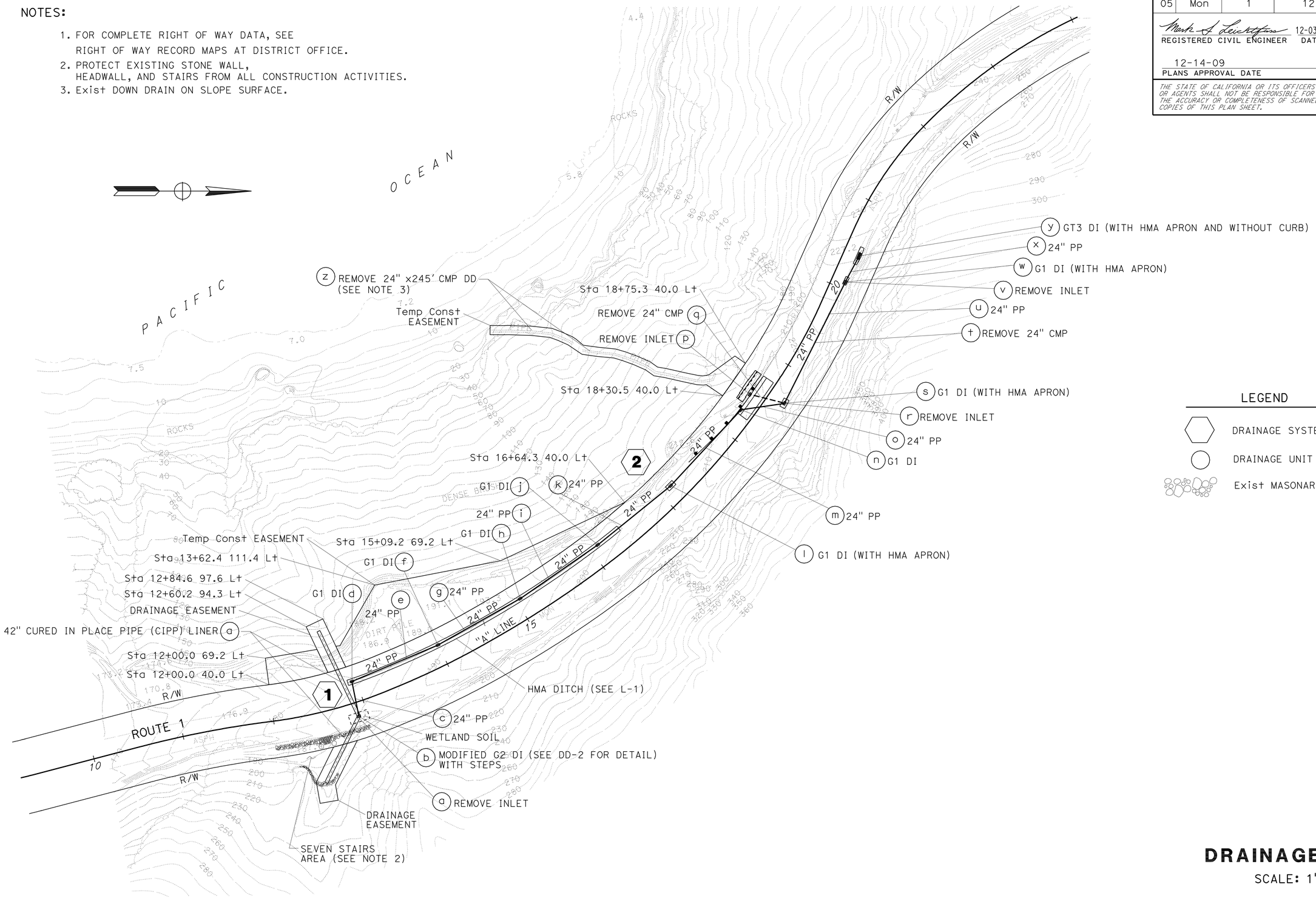

LEGEND

- DRAINAGE SYSTEM No.
- DRAINAGE UNIT
- Exist MASONARY STONE

THIS PLAN ACCURATE FOR DRAINAGE WORK ONLY.

DRAINAGE PLAN

SCALE: 1" = 50'

D-1

STATE OF CALIFORNIA - DEPARTMENT OF TRANSPORTATION
Caltrans®
DESIGN

FUNCTIONAL SUPERVISOR: RON R. KRAEMER

CALCULATED-DESIGNED BY: MARK S. LEICHTFUSS
CHECKED BY: AMJED HETTINI

REVISED BY | DATE REVISED

LAST REVISION 12-03-08 | DATE PLOTTED => 22-DEC-2009 | TIME PLOTTED => 07:55

Dist	COUNTY	ROUTE	POST MILES TOTAL PROJECT	SHEET No.	TOTAL SHEETS
05	Mon	1	12.1	8	26

REGISTERED CIVIL ENGINEER 12-03-08 DATE

12-14-09
PLANS APPROVAL DATE

REGISTERED PROFESSIONAL ENGINEER MARK S. LEICHTFUSS No. 69124 Exp. 6-30-10 CIVIL STATE OF CALIFORNIA

THE STATE OF CALIFORNIA OR ITS OFFICERS OR AGENTS SHALL NOT BE RESPONSIBLE FOR THE ACCURACY OR COMPLETENESS OF SCANNED COPIES OF THIS PLAN SHEET.

NOTES:

1. DI GRATE ELEVATIONS ARE AT CENTER OF GRATE.
2. ALL PLASTIC PIPE (PP) HAS SMOOTH INTERIOR.
3. LINER SHALL BE TRIMMED 1" INSIDE FRONT FACE OF ROCK HEADWALL AND NEATLY GROUTED.
4. ROCK HEADWALL SHALL NOT BE REMOVED NOR DAMAGED.
5. PLACE SLURRY CEMENT BACKFILL IN VOIDS UNDER 42" CMP INVERT.

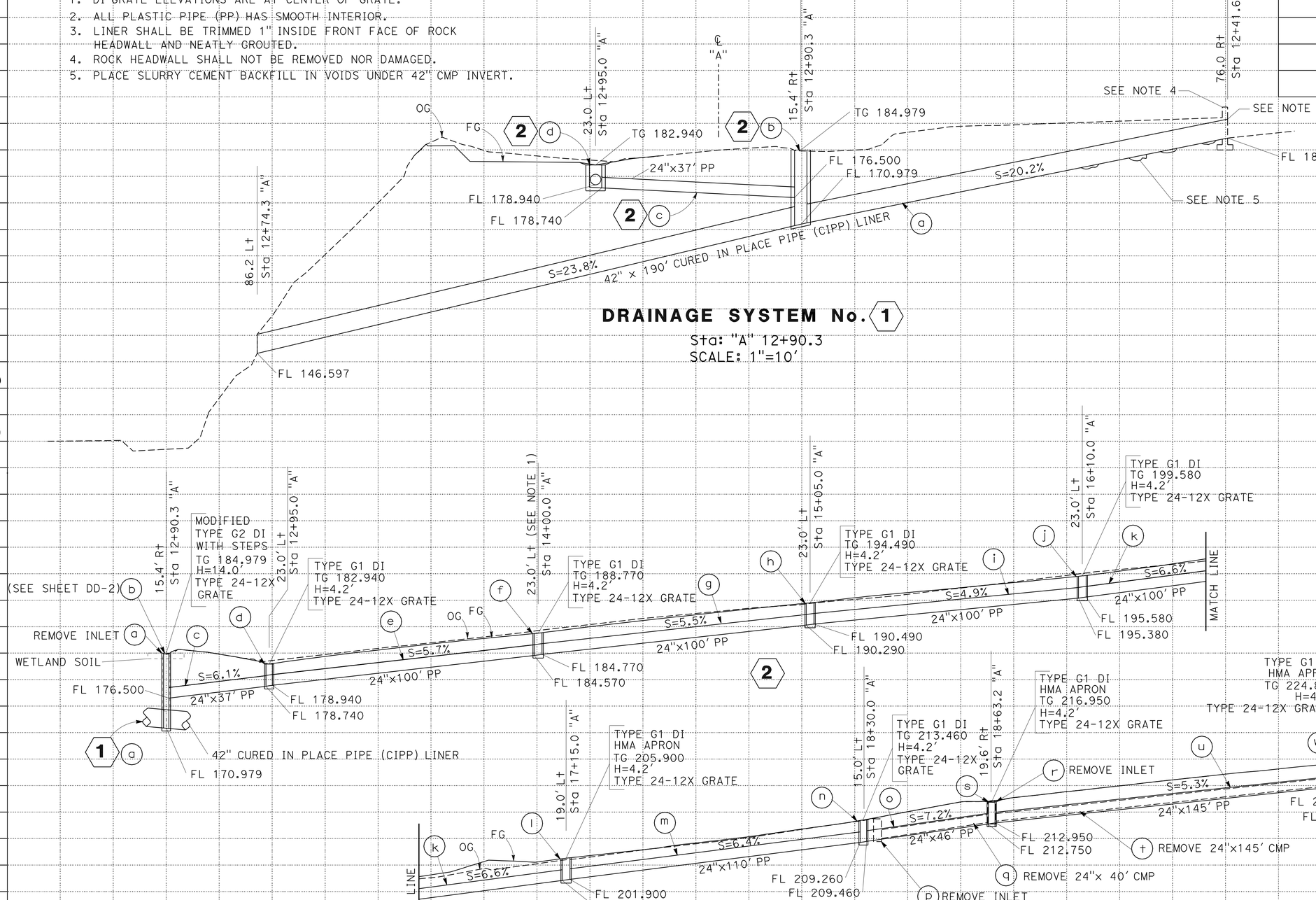

DRAINAGE SYSTEM No. 1

Sta: "A" 12+90.3
SCALE: 1"=10'

DRAINAGE SYSTEM No. 2

Sta 12+90.3 TO 20+40.0
SCALE: Horiz: 1"=20'
Vert: 1"=10'

DRAINAGE PROFILE

SCALE AS SHOWN

DP-1

STATION		TOTAL
CY	Exc	
	Emb	

REVISED BY | DATE REVISED
MARK S. LEICHTFUSS | AMJED HETTINI
CALCULATED-DESIGNED BY | CHECKED BY
FUNCTIONAL SUPERVISOR: RON R. KRAEMER

STATE OF CALIFORNIA - DEPARTMENT OF TRANSPORTATION
DESIGN

LAST REVISION 12-03-08 | DATE PLOTTED => 22-DEC-2009 | TIME PLOTTED => 07:55

Dist	COUNTY	ROUTE	POST MILES TOTAL PROJECT	SHEET No.	TOTAL SHEETS
05	Mon	1	12.1	9	26

REGISTERED CIVIL ENGINEER 12-03-08 DATE

12-14-09
PLANS APPROVAL DATE

REGISTERED PROFESSIONAL ENGINEER MARK S. LEICHTFUSS No. 69124 Exp. 6-30-10 CIVIL STATE OF CALIFORNIA

THE STATE OF CALIFORNIA OR ITS OFFICERS OR AGENTS SHALL NOT BE RESPONSIBLE FOR THE ACCURACY OR COMPLETENESS OF SCANNED COPIES OF THIS PLAN SHEET.

NOTE:
1. CONSTRUCT HMA APRONS WITH A THICKNESS OF 0.25'.

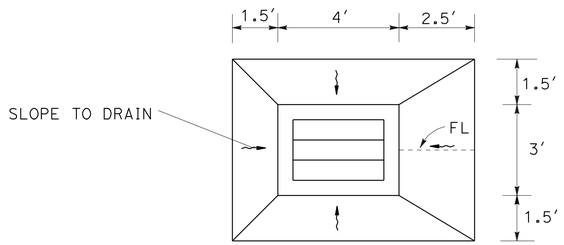

HMA INLET APRON FOR SYSTEM 2 (I) (S)

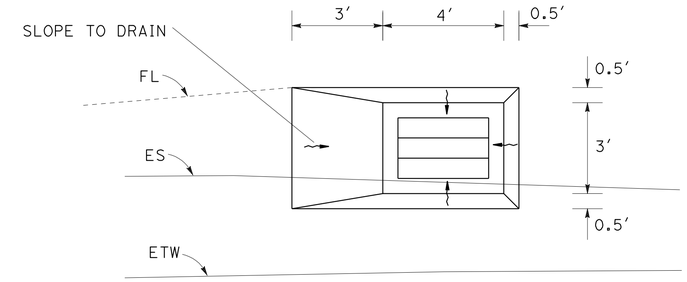

HMA INLET APRON SYSTEM 2 (W)

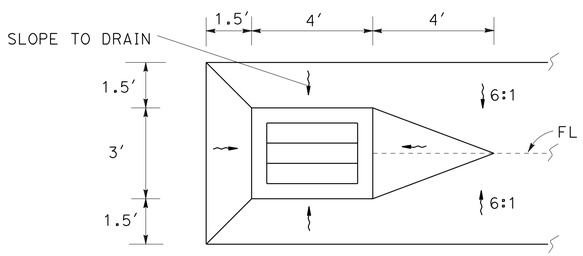

INLET AND HMA DITCH DETAIL FOR SYSTEM 2 (d)

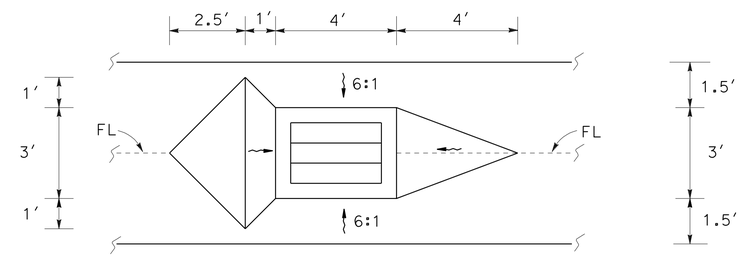

INLET AND HMA DITCH DETAIL FOR SYSTEM 2 (f) (h) (j)

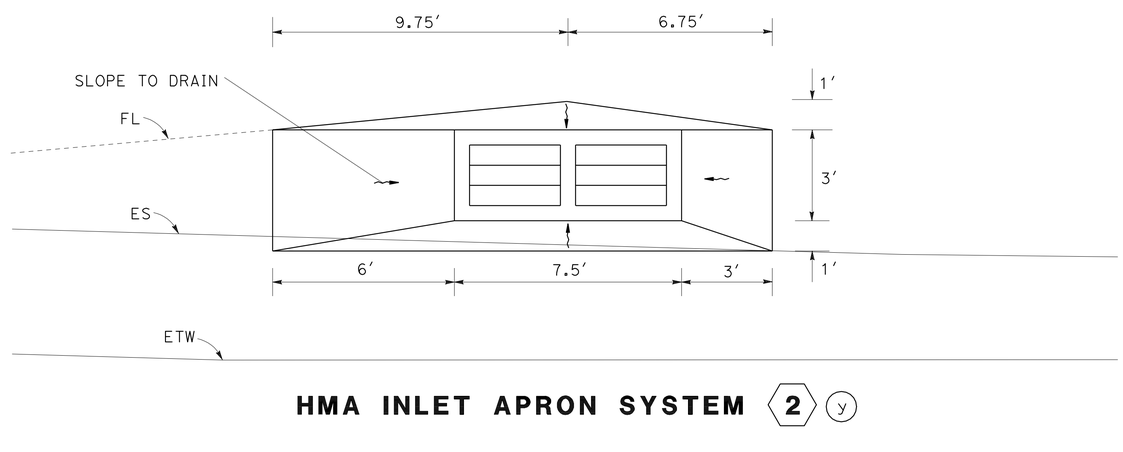

HMA INLET APRON SYSTEM 2 (y)

DRAINAGE DETAILS

NO SCALE

DD-1

STATE OF CALIFORNIA - DEPARTMENT OF TRANSPORTATION
Caltrans
DESIGN

FUNCTIONAL SUPERVISOR: RON R. KRAEMER
CALCULATED-DESIGNED BY: MARK S. LEICHTFUSS
CHECKED BY: AMJED HETTINI
REVISED BY
DATE REVISED

LAST REVISION 12-03-08 DATE PLOTTED => 22-DEC-2009 TIME PLOTTED => 07:55

Dist	COUNTY	ROUTE	POST MILES TOTAL PROJECT	SHEET No.	TOTAL SHEETS
05	Mon	1	12.1	10	26

REGISTERED CIVIL ENGINEER 12-03-08 DATE

12-14-09
PLANS APPROVAL DATE

REGISTERED PROFESSIONAL ENGINEER MARK S. LEICHTFUSS No. 69124 Exp. 6-30-10 CIVIL STATE OF CALIFORNIA

THE STATE OF CALIFORNIA OR ITS OFFICERS OR AGENTS SHALL NOT BE RESPONSIBLE FOR THE ACCURACY OR COMPLETENESS OF SCANNED COPIES OF THIS PLAN SHEET.

NOTE:

1. SHORE AS NECESSARY OR AS DIRECTED BY ENGINEER.

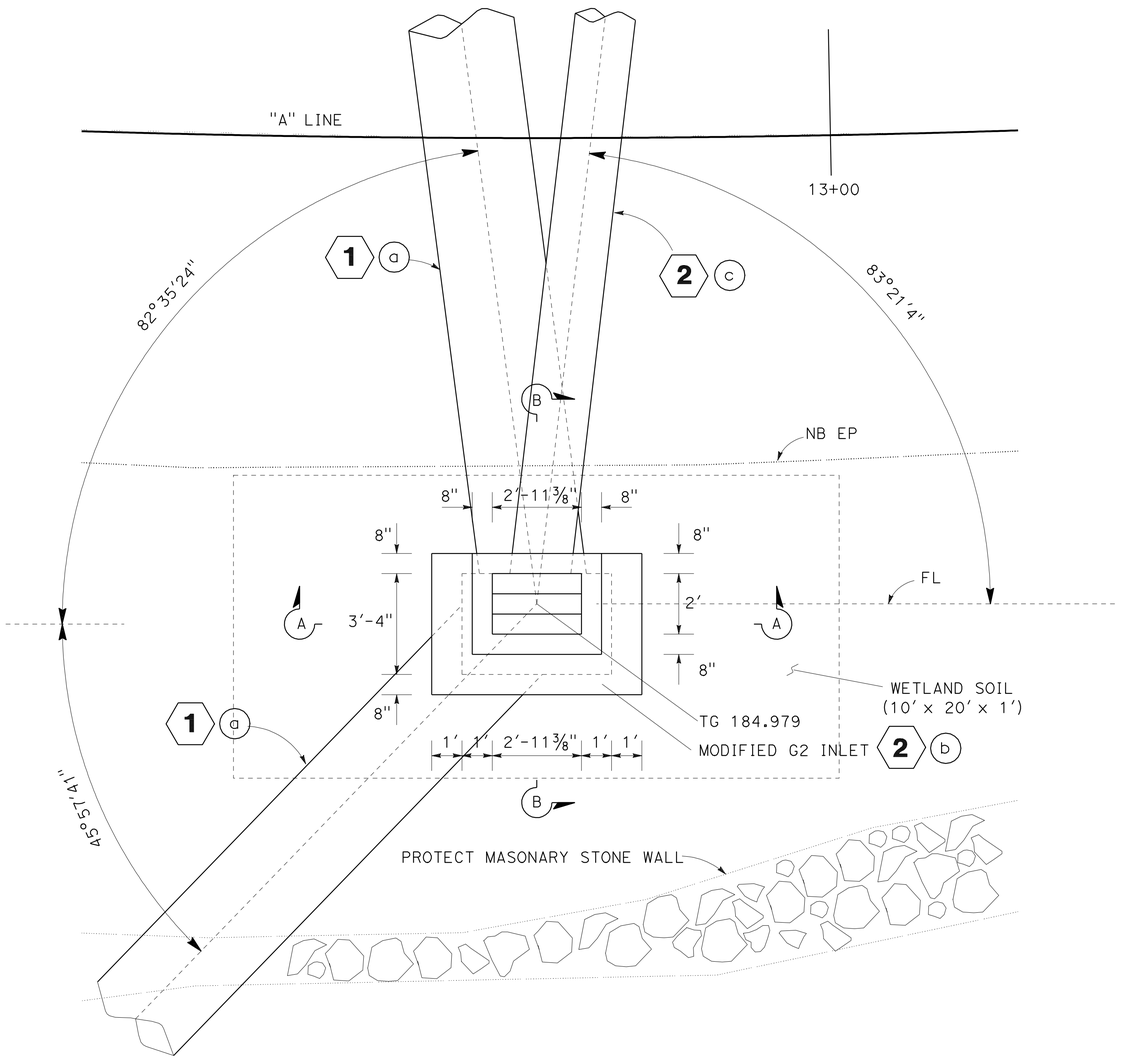

MODIFIED G2 INLET DETAIL - SYSTEM 2 b

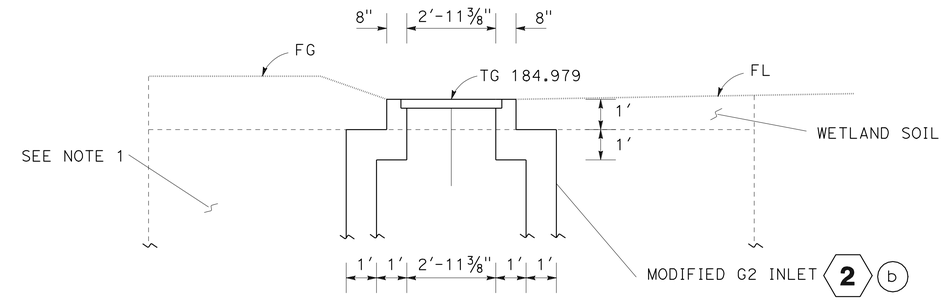

SECTION A-A

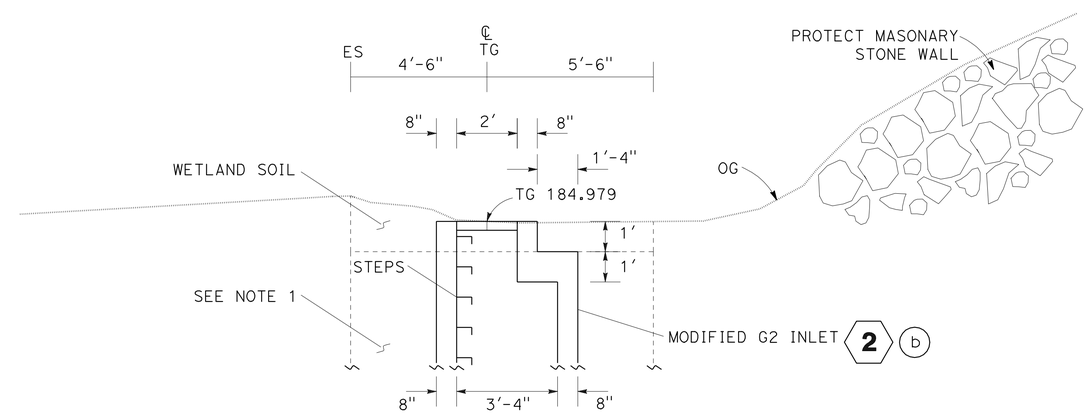

SECTION B-B

DRAINAGE DETAILS

NO SCALE

DD-2

STATE OF CALIFORNIA - DEPARTMENT OF TRANSPORTATION
Caltrans
DESIGN

FUNCTIONAL SUPERVISOR: RON R. KRAEMER
CALCULATED-DESIGNED BY: MARK S. LEICHTFUSS
CHECKED BY: AMJED HETTINI
REVISED BY
DATE REVISED

LAST REVISION 12-03-08
DATE PLOTTED => 22-DEC-2009
TIME PLOTTED => 07:55

Dist	COUNTY	ROUTE	POST MILES TOTAL PROJECT	SHEET No.	TOTAL SHEETS
05	Mon	1	12.1	11	26

REGISTERED CIVIL ENGINEER 12-03-08 DATE

12-14-09
PLANS APPROVAL DATE

REGISTERED PROFESSIONAL ENGINEER MARK S. LEICHTFUSS No. 69124 Exp. 6-30-10 CIVIL STATE OF CALIFORNIA

THE STATE OF CALIFORNIA OR ITS OFFICERS OR AGENTS SHALL NOT BE RESPONSIBLE FOR THE ACCURACY OR COMPLETENESS OF SCANNED COPIES OF THIS PLAN SHEET.

NOTE:
1. (N) NOT A SEPARATE PAY ITEM. FOR INFORMATION ONLY.

DRAINAGE SYSTEM No.	DRAINAGE UNIT No.	42" CURED IN PLACE PIPE LINER (CIPP) LF	24" PLASTIC PIPE (SMOOTH INTERIOR) LF	MINOR CONCRETE (MINOR STRUCTURE) CUYD	MISC IRON AND STEEL LB	(N) TYPE 24-12X GRATE EA	(N) HEIGHT OF INLET LF	(N) STEPS EA	WETLAND SOIL SQYD	REMOVE PIPE LF	REMOVE INLET EA	(N) HMA INLET APRON EA	HMA (TYPE A) TON	PLACE HMA (Misc AREA) SQYD	REMOVE DOWNDRAIN LF	CLEANING, INSPECTING AND REPAIRING HOST PIPE LF	DESCRIPTION	STATION	DRAINAGE SYSTEM No.	DRAINAGE UNIT No.
1	a	190														190	42 " CURED-IN-PLACE PIPE (CIPP) LINER	Sta 12+41.6 76.0 Rt TO Sta 12+74.3 86.2 Rt "A" LINE	1	a
2	a										1						REMOVE INLET	Sta 12+90.3 15.4' Rt "A" LINE	2	a
	b			7.43	239	1	14.0	13	23								MODIFIED DI TYPE G2 WITH STEPS, TYPE 24-12X GRATE	Sta 12+90.3 15.4' Rt "A" LINE		b
	c		37														24" PLASTIC PIPE WITH SMOOTH INTERIOR (TRENCH ACROSS HWY)	Sta 12+90.3 15.4 Rt TO Sta 12+95.0 23.0 Lt "A" LINE		c
	d			1.21	239	1	4.2										DI TYPE G1, TYPE 24-12X GRATE	Sta 12+95.0 23.0 Lt "A" LINE		d
	e		100														24" PLASTIC PIPE WITH SMOOTH INTERIOR	Sta 12+95.0 23.0 Lt TO Sta 14+00.0 23.0 Lt "A" LINE		e
	f			1.21	239	1	4.2										DI TYPE G1, TYPE 24-12X GRATE	Sta 14+00.0 23.0 Lt "A" LINE		f
	g		100														24" PLASTIC PIPE WITH SMOOTH INTERIOR	Sta 14+00.0 23.0 Lt TO Sta 15+05 23.0 Lt "A" LINE		g
	h			1.21	239	1	4.2										DI TYPE G1, TYPE 24-12X GRATE	Sta 15+05 23.0 Lt "A" LINE		h
	i		100														24" PLASTIC PIPE WITH SMOOTH INTERIOR	Sta 15+05 23.0 Lt TO Sta 16+10.0 23.0 Lt "A" LINE		i
	j			1.21	239	1	4.2										DI TYPE G1, TYPE 24-12X GRATE	Sta 16+10.0 23.0 Lt "A" LINE		j
	k		100														24" PLASTIC PIPE WITH SMOOTH INTERIOR	Sta 16+10.0 23.0 Lt TO Sta 17+15.0 19.0 Lt "A" LINE		k
	l			1.21	239	1	4.2					1	1.1	4			DI TYPE G1, TYPE 24-12X GRATE (WITH HMA APRON)	Sta 17+15.0 19.0 Lt "A" LINE		l
	m		110														24" PLASTIC PIPE WITH SMOOTH INTERIOR	Sta 17+15.0 19.0 Lt TO Sta 18+30.0 15.0 Lt "A" LINE		m
	n			1.21	239	1	4.2										DI TYPE G1, TYPE 24-12X GRATE	Sta 18+30.0 15.0 Lt "A" LINE		n
	o		46														24" PLASTIC PIPE WITH SMOOTH INTERIOR (TRENCH ACROSS HWY)	Sta 18+30.0 15.0 Lt TO Sta 18+63.2 19.6 Rt "A" LINE		o
	p										1						REMOVE INLET	Sta 18+49.5 16.8 Lt "A" LINE		p
	q									40							REMOVE 24" CMP (TRENCH ACROSS HWY)	Sta 18+49.5 16.8 Lt TO Sta 18+63.2 19.6 Rt "A" LINE		q
	r										1						REMOVE INLET	Sta 18+63.2 19.6 Rt "A" LINE		r
	s			1.21	239	1	4.2					1	1.1	4			DI TYPE G1, TYPE 24-12X GRATE (WITH HMA APRON)	Sta 18+63.2 19.6 Rt "A" LINE		s
	t									145							REMOVE 24" CMP (TRENCH DOWN NB SHOULDER)	Sta 18+63.2 19.6 Rt TO Sta 20+08.0 15.0 Rt "A" LINE		t
	u		145														24" PP WITH SMOOTH INTERIOR	Sta 18+63.2 19.6 Rt TO Sta 20+08.0 15.0 Rt "A" LINE		u
	v										1						REMOVE INLET	Sta 20+08.0 15.0 Rt "A" LINE		v
	w			1.21	239	1	4.2					1	0.5	2			DI TYPE G1, TYPE 24-12X GRATE (WITH HMA APRON)	Sta 20+08.0 15.0 Rt "A" LINE		w
	x		27														24" PP WITH SMOOTH INTERIOR (TRENCH DOWN SB SHOULDER)	Sta 20+08.0 15.0 Rt TO Sta 20+40.0 17.0 Rt "A" LINE		x
	y			2.08	478	2	4.0					1	1.6	5.8			DI TYPE GT3, TYPE 24-12X GRATES (WITH HMA APRON) w/o CURB	Sta 20+40.0 17.0 Rt "A" LINE		y
	z														245		REMOVE 24" CMP DOWNDRAIN	Sta 16+86.0 274.0 Lt TO Sta 18+46.0 60.0 Lt "A" LINE		z
TOTAL		190	765	19.19	2629				23	185	4		4.3	15.8	245	190				

DRAINAGE QUANTITIES

DQ-1

STATE OF CALIFORNIA - DEPARTMENT OF TRANSPORTATION
Caltrans® DESIGN

FUNCTIONAL SUPERVISOR: RON R. KRAEMER
CALCULATED-DESIGNED BY: MARK S. LEICHTFUSS
CHECKED BY: AMJED HETTINI
REVISED BY
DATE REVISED

LAST REVISION 12-03-08 DATE PLOTTED => 22-DEC-2009 TIME PLOTTED => 07:55

Dist	COUNTY	ROUTE	POST MILES TOTAL PROJECT	SHEET No.	TOTAL SHEETS
05	Mon	1	12.1	12	26

REGISTERED CIVIL ENGINEER 12-03-08 DATE

12-14-09
PLANS APPROVAL DATE

REGISTERED PROFESSIONAL ENGINEER MARK S. LEICHTFUSS No. 69124 Exp. 6-30-10 CIVIL STATE OF CALIFORNIA

THE STATE OF CALIFORNIA OR ITS OFFICERS OR AGENTS SHALL NOT BE RESPONSIBLE FOR THE ACCURACY OR COMPLETENESS OF SCANNED COPIES OF THIS PLAN SHEET.

NOTES:

1. FOR COMPLETE RIGHT OF WAY DATA, SEE RECORD MAPS AT DISTRICT OFFICE.
2. UTILITY WORK SHALL BE PERFORMED BY SBC/AT&T (CA) AFTER CONSTRUCTION.
3. TEMPORARY TELEPHONE CABLE (SURFACE) SHALL BE INSTALLED BY SBC/AT&T (CA) PRIOR TO CONSTRUCTION.
4. DEPTH OF EXISTING Tel CABLE IS APPROXIMATELY 42" BELOW FINISH GRADE.
5. 4" COMMUNICATION CONDUIT SHALL BE INSTALLED DURING CRIB WALL CONSTRUCTION.
6. PLACE 4" COMMUNICATION CONDUIT UNDER 24" PP.
7. THE 4" COMMUNICATION CONDUIT SHALL HAVE A MINIMUM DEPTH OF 42".
8. PRESERVE 10' OF EXISTING Tel CABLE COMING OUT OF VIADUCT AT STA 18+75 AND RELOCATE CABLE TO THE BACK SIDE OF MBGR OR AS DIRECTED BY ENGINEER.
9. PROTECT EXISTING STONE WALL, HEADWALL, AND STAIRS FROM ALL CONSTRUCTION ACTIVITIES.
10. PROTECT Temp TELEPHONE CABLE (SURFACE) FROM ALL CONSTRUCTION ACTIVITIES.

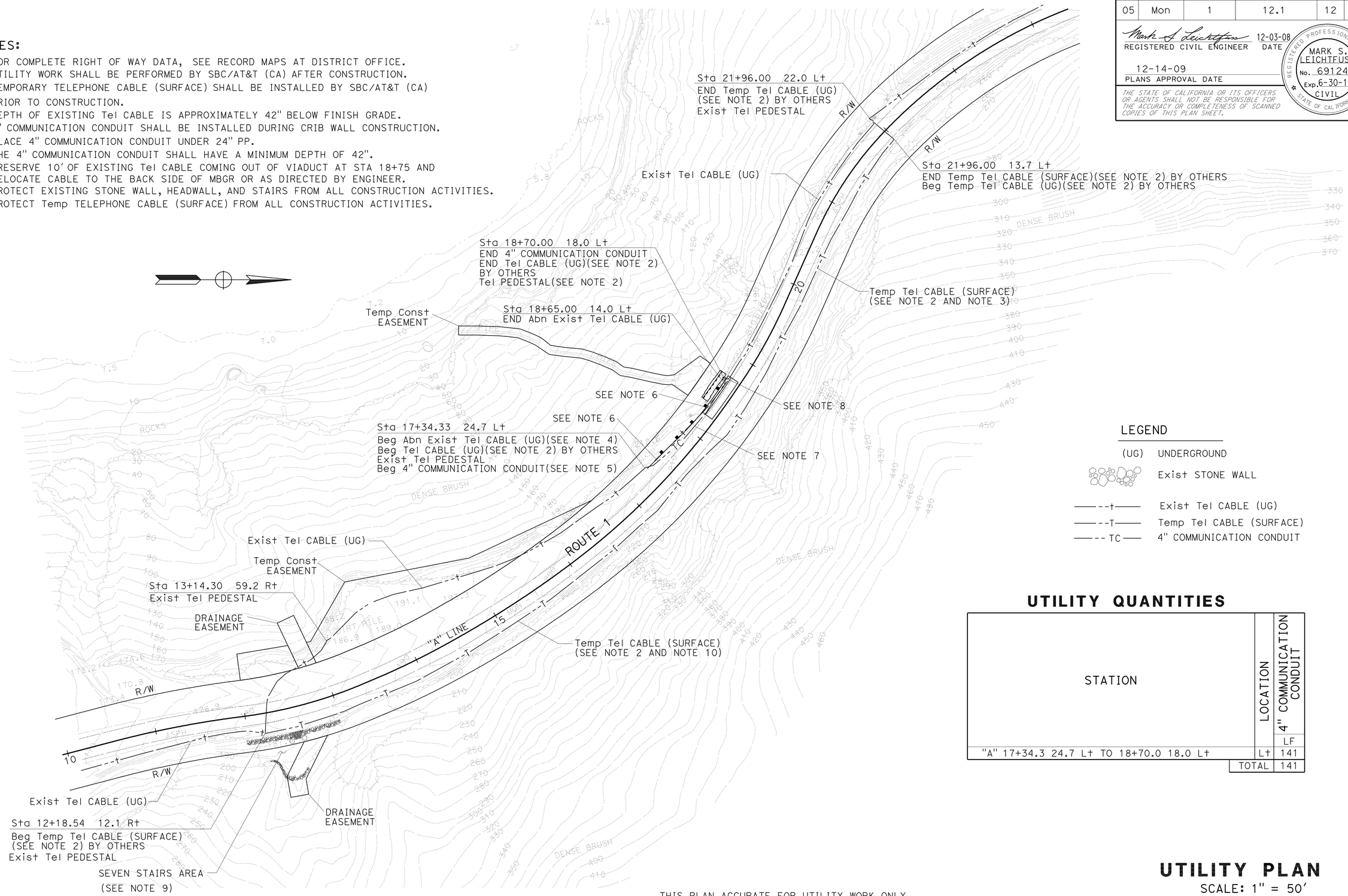

LEGEND

(UG)	UNDERGROUND
	Exist STONE WALL
——--t——	Exist Tel CABLE (UG)
——--T——	Temp Tel CABLE (SURFACE)
——-- TC ——	4" COMMUNICATION CONDUIT

UTILITY QUANTITIES

STATION	LOCATION	4" COMMUNICATION CONDUIT LF
"A" 17+34.3 24.7 Lt TO 18+70.0 18.0 Lt	Lt	141
	TOTAL	141

THIS PLAN ACCURATE FOR UTILITY WORK ONLY.

UTILITY PLAN

SCALE: 1" = 50'

U-1

STATE OF CALIFORNIA - DEPARTMENT OF TRANSPORTATION
Caltrans
DESIGN

FUNCTIONAL SUPERVISOR: RON R. KRAEMER
CALCULATED-DESIGNED BY: MARK S. LEICHTFUSS
CHECKED BY: AMJED HETTINI
REVISED BY
DATE REVISED

LAST REVISION 12-03-08
DATE PLOTTED => 22-DEC-2009
TIME PLOTTED => 07:56

Dist	COUNTY	ROUTE	POST MILES TOTAL PROJECT	SHEET No.	TOTAL SHEETS
05	Mon	1	12.1	13	26

REGISTERED CIVIL ENGINEER 12-03-08 DATE

12-14-09
PLANS APPROVAL DATE

REGISTERED PROFESSIONAL ENGINEER MARK S. LEICHTFUSS No. 69124 Exp. 6-30-10 CIVIL STATE OF CALIFORNIA

THE STATE OF CALIFORNIA OR ITS OFFICERS OR AGENTS SHALL NOT BE RESPONSIBLE FOR THE ACCURACY OR COMPLETENESS OF SCANNED COPIES OF THIS PLAN SHEET.

NOTES:

1. EXACT SIGN LOCATIONS TO BE DETERMINED BY THE ENGINEER.
2. ADDITIONAL CONSTRUCTION AREA SIGNS SHOWN ON THE OTHER PLAN SHEETS.

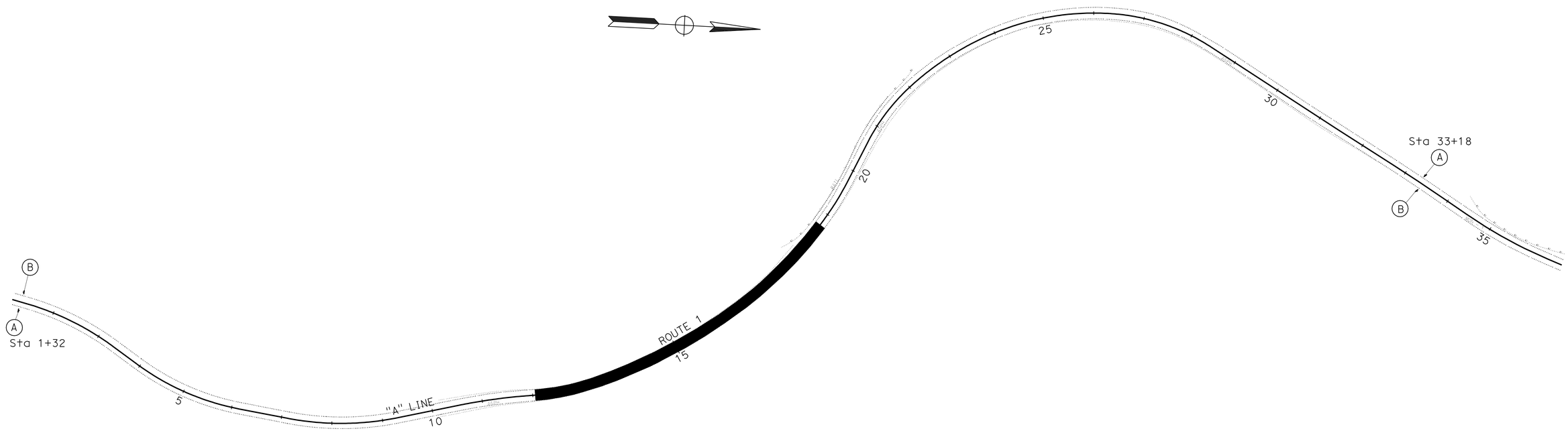

STATIONARY MOUNTED CONSTRUCTION AREA SIGNS

SIGN No.	SIGN CODE	PANEL SIZE	SIGN MESSAGE	No. OF POST AND SIZE	No. OF SIGNS
A	W20-1	48"x48"	ROAD WORK AHEAD	1-4"x6"	2
B	G20-2	36"x18"	END ROAD WORK	1-4"x4"	2

THIS PLAN ACCURATE FOR CONSTRUCTION AREA SIGN WORK ONLY.

CONSTRUCTION AREA SIGNS

SCALE: 1"=100'

CS-1

STATE OF CALIFORNIA - DEPARTMENT OF TRANSPORTATION
Caltrans®
DESIGN

FUNCTIONAL SUPERVISOR: RON R. KRAEMER

CALCULATED-DESIGNED BY: MARK S. LEICHTFUSS
CHECKED BY: AMJED HETTINI

REVISED BY
DATE REVISED

LAST REVISION 12-03-08 DATE PLOTTED => 22-DEC-2009 TIME PLOTTED => 07:56

Dist	COUNTY	ROUTE	POST MILES TOTAL PROJECT	SHEET No.	TOTAL SHEETS
05	Mon	1	12.1	14	26

REGISTERED CIVIL ENGINEER 12-03-08 DATE

12-14-09
PLANS APPROVAL DATE

REGISTERED PROFESSIONAL ENGINEER MARK S. LEICHTFUSS No. 69124 Exp. 6-30-10 CIVIL STATE OF CALIFORNIA

THE STATE OF CALIFORNIA OR ITS OFFICERS OR AGENTS SHALL NOT BE RESPONSIBLE FOR THE ACCURACY OR COMPLETENESS OF SCANNED COPIES OF THIS PLAN SHEET.

NOTES:

1. SIGN LOCATIONS ARE APPROXIMATE ONLY. EXACT LOCATIONS TO BE DETERMINED BY THE ENGINEER.
2. COVER ALL CONFLICTING SIGNS.

LEGEND

- DIRECTION OF TRAFFIC THIS STAGE (ONE LANE EACH DIRECTION)
- DIRECTION OF TRAFFIC THIS STAGE (ONE LANE OPEN)
- CHANNELIZER (SURFACE MOUNTED)
- TEMPORARY RAILING (TYPE K)
- CONSTRUCT THIS STAGE
- P OBJECT MARKER TYPE P (CA)
- FLAGGER
- TEMPORARY CRASH CUSHION , SAND FILLED (BIDIRECTIONAL)(ARRAY 'TB14')
- FLASHING BEACON (PORTABLE)
- SIGN NUMBER

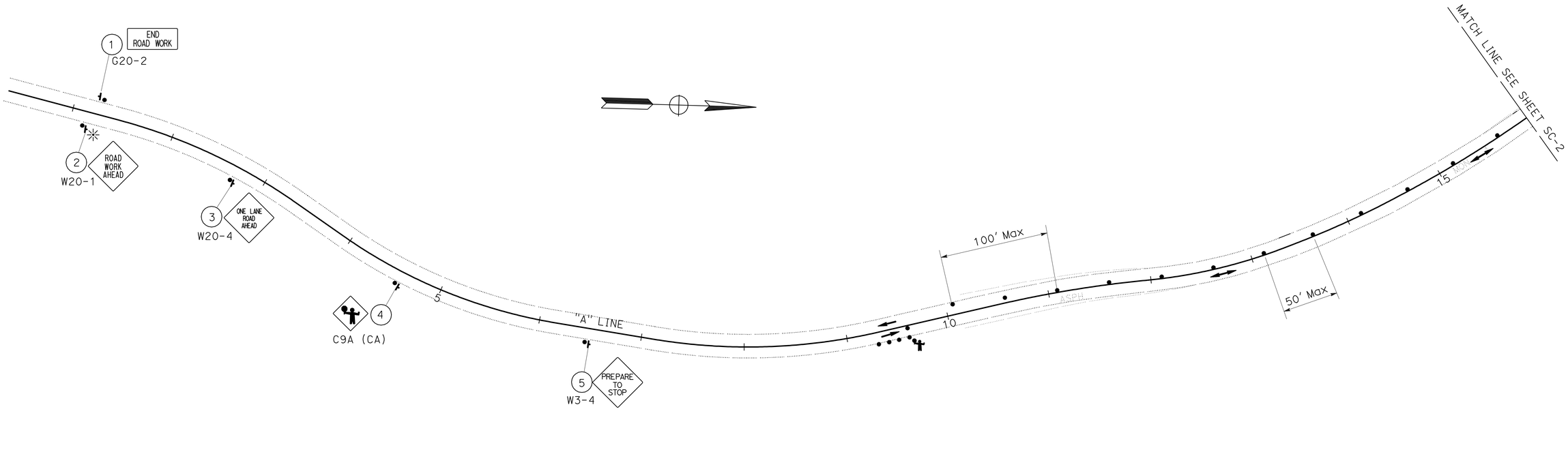

THIS PLAN ACCURATE FOR STAGE CONSTRUCTION AND TRAFFIC HANDLING ONLY.

STAGE CONSTRUCTION AND TRAFFIC HANDLING PLAN

SCALE: 1"=50'

SC-1

STATE OF CALIFORNIA - DEPARTMENT OF TRANSPORTATION
Caltrans
DESIGN

FUNCTIONAL SUPERVISOR: RON R. KRAEMER

CALCULATED-DESIGNED BY: MARK S. LEICHTFUSS
CHECKED BY: AMJED HETTINI

REVISED BY
DATE REVISED

LAST REVISION 12-03-08
DATE PLOTTED => 22-DEC-2009
TIME PLOTTED => 07:56

Dist	COUNTY	ROUTE	POST MILES TOTAL PROJECT	SHEET No.	TOTAL SHEETS
05	Mon	1	12.1	15	26

REGISTERED CIVIL ENGINEER 12-03-08 DATE

12-14-09
PLANS APPROVAL DATE

REGISTERED PROFESSIONAL ENGINEER MARK S. LEICHTFUSS No. 69124 Exp. 6-30-10 CIVIL STATE OF CALIFORNIA

THE STATE OF CALIFORNIA OR ITS OFFICERS OR AGENTS SHALL NOT BE RESPONSIBLE FOR THE ACCURACY OR COMPLETENESS OF SCANNED COPIES OF THIS PLAN SHEET.

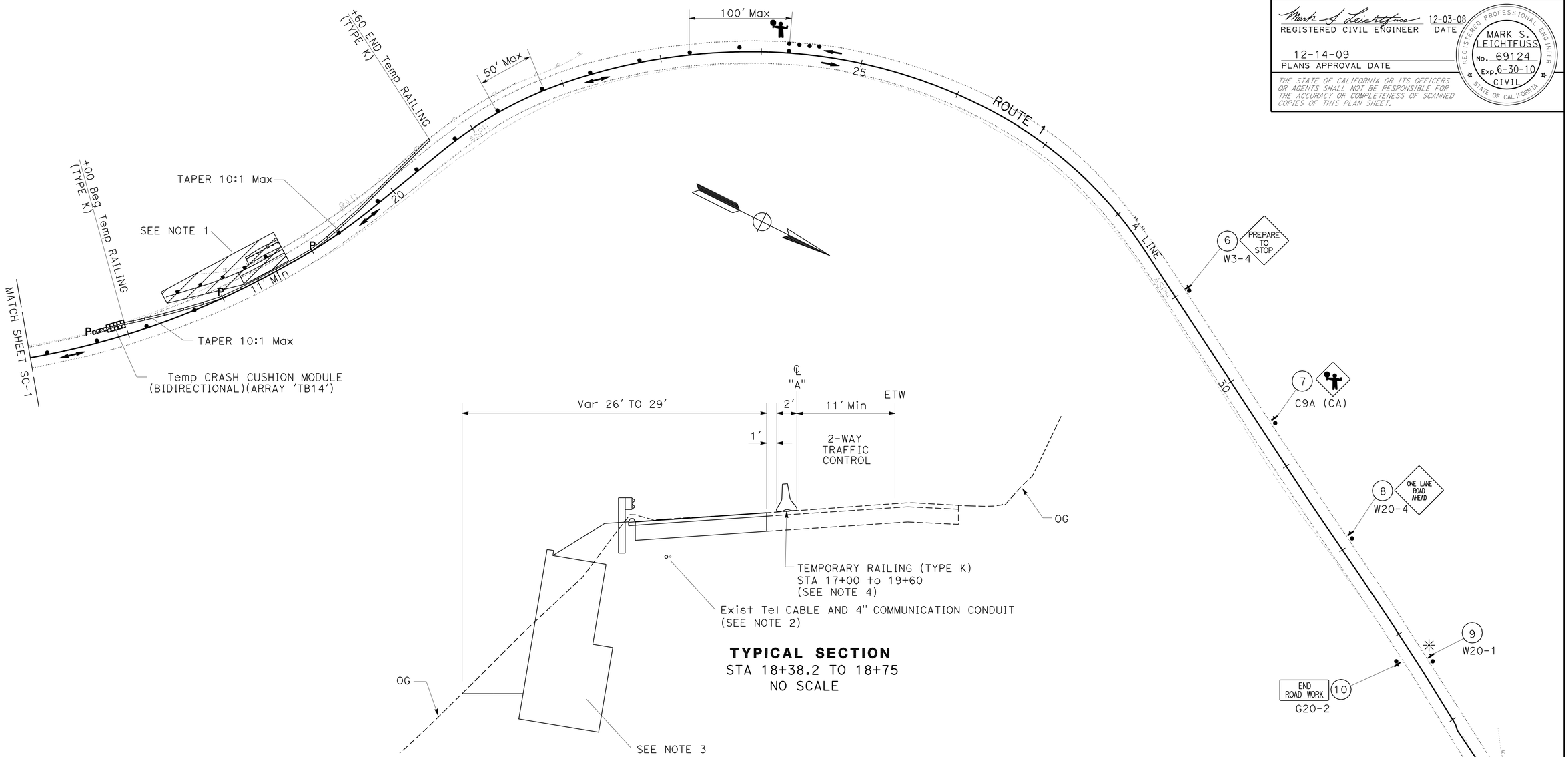

TYPICAL SECTION
STA 18+38.2 TO 18+75
NO SCALE

NOTES:

1. PLACE TRAFFIC CONTROL ITEMS, REMOVE MBGR, CONSTRUCT CRIB WALL, MBGR, DRAINAGE ITEMS, TELEPHONE, CABLE CONDUIT, AND ROADBED.
2. SEE UTILITY PLAN U-1 FOR ADDITIONAL INFORMATION.
3. SEE Const DETAIL C-1 FOR ADDITIONAL INFORMATION.
4. Temp RAILING (TYPE K) SHALL BE PINNED IF PLACED LESS THAN 2' FROM EDGE OF EXCAVATION.

THIS PLAN ACCURATE FOR STAGE CONSTRUCTION AND TRAFFIC HANDLING WORK ONLY.

STAGE CONSTRUCTION AND TRAFFIC HANDLING PLAN

SCALE: 1" = 50'

SC-2

STATE OF CALIFORNIA - DEPARTMENT OF TRANSPORTATION
Caltrans® DESIGN

FUNCTIONAL SUPERVISOR: RON R. KRAEMER
CALCULATED-DESIGNED BY: MARK S. LEICHTFUSS
CHECKED BY: AMJED HETTINI
REVISED BY
DATE REVISED

LAST REVISION 12-03-08
DATE PLOTTED => 22-DEC-2009
TIME PLOTTED => 07:56

Dist	COUNTY	ROUTE	POST MILES TOTAL PROJECT	SHEET No.	TOTAL SHEETS
05	Mon	1	12.1	16	26

REGISTERED CIVIL ENGINEER 12-03-08 DATE

12-14-09
PLANS APPROVAL DATE

REGISTERED PROFESSIONAL ENGINEER MARK S. LEICHTFUSS No. 69124 Exp. 6-30-10 CIVIL STATE OF CALIFORNIA

THE STATE OF CALIFORNIA OR ITS OFFICERS OR AGENTS SHALL NOT BE RESPONSIBLE FOR THE ACCURACY OR COMPLETENESS OF SCANNED COPIES OF THIS PLAN SHEET.

CONSTRUCTION AREA SIGNS (STATIONARY MOUNTED)

SHEET No.	SIGN No.	SIGN CODE	SIGN MESSAGE	PANEL SIZE	QUANTITY
SC-1	1	G20-2	END ROAD WORK	36" x 18"	1
	2	W20-1	ROAD WORK AHEAD	48" x 48"	1
	3	W20-4	ONE LANE ROAD AHEAD	48" x 48"	1
	4	C9A (CA)	FLAGGER	48" x 48"	1
	5	W3-4	PREPARE TO STOP	48" x 48"	1
SC-2	6	W3-4	PREPARE TO STOP	48" x 48"	1
	7	C9A (CA)	FLAGGER	48" x 48"	1
	8	W20-4	ONE LANE ROAD AHEAD	48" x 48"	1
	9	W20-1	ROAD WORK AHEAD	48" x 48"	1
	10	G20-2	END ROAD WORK	36" x 18"	1

STAGE CONSTRUCTION PAVEMENT DELINEATION

STAGE No.	SHEET No.	TEMPORARY CRASH CUSHION MODULE	OBJECT MARKER TYPE P (CA)		FLASHING BEACON (PORTABLE)	CHANNELIZER (SURFACE MOUNTED)
			L†	R†		
		EA	EA	EA	EA	EA
1	SC-1				1	17
	SC-2	14	2	1	1	19
TOTAL		14	3		2	46

TEMPORARY RAILING (TYPE K)

STAGE No.	SHEET No.	DIRECTION	STATION LIMITS	TEMPORARY RAILING (TYPE K)
				LF
1	SC-2	SB	"A" 17+00 to 20+60	360
			TOTAL	360

STAGE CONSTRUCTION AND TRAFFIC HANDLING QUANTITIES

SCQ-1

REVISED BY | DATE REVISED
MARK S. LEICHTFUSS | AMJED HETTINI
CALCULATED-DESIGNED BY | CHECKED BY
FUNCTIONAL SUPERVISOR: RON R. KRAEMER
STATE OF CALIFORNIA - DEPARTMENT OF TRANSPORTATION
Caltrans® DESIGN

LAST REVISION 12-03-08 | DATE PLOTTED => 22-DEC-2009 TIME PLOTTED => 07:56

Dist	COUNTY	ROUTE	POST MILES TOTAL PROJECT	SHEET No.	TOTAL SHEETS
05	Mon	1	12.1	17	26

REGISTERED CIVIL ENGINEER 12-03-08 DATE

12-14-09
PLANS APPROVAL DATE

REGISTERED PROFESSIONAL ENGINEER MARK S. LEICHTFUSS No. 69124 Exp. 6-30-10 CIVIL STATE OF CALIFORNIA

THE STATE OF CALIFORNIA OR ITS OFFICERS OR AGENTS SHALL NOT BE RESPONSIBLE FOR THE ACCURACY OR COMPLETENESS OF SCANNED COPIES OF THIS PLAN SHEET.

LEGEND

21 TRAFFIC LINE DETAIL No.

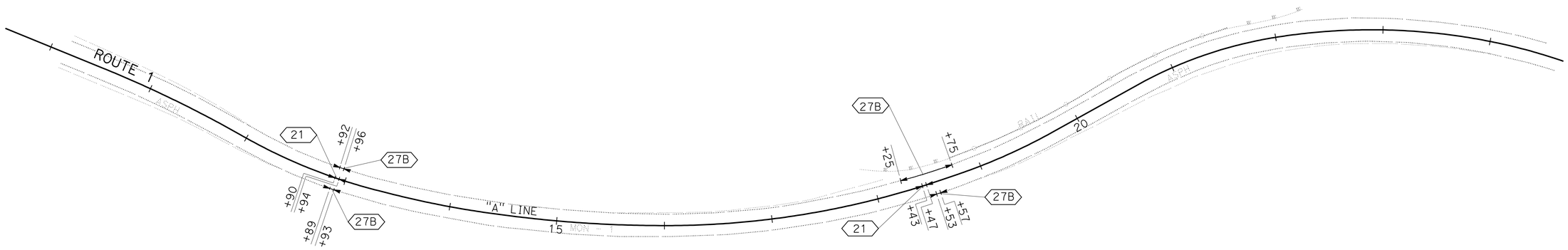

LOCATION	DETAIL No.	4" THERMOPLASTIC TRAFFIC STRIPE
		LF
"A" LINE 12+89 to "A" LINE 12+93 Rt	27B	4
"A" LINE 12+90 to "A" LINE 12+94	21	4
"A" LINE 12+92 to "A" LINE 12+96 Rt	27B	4
"A" LINE 18+25 to "A" LINE 18+75 Lt	27B	50
"A" LINE 18+43 to "A" LINE 18+47	21	4
"A" LINE 18+53 to "A" LINE 18+57 Rt	27B	4
TOTAL		70

THIS PLAN ACCURATE FOR PAVEMENT DELINEATION ONLY.

PAVEMENT DELINEATION QUANTITIES

SCALE: 1" = 50'

PD-1

STATE OF CALIFORNIA - DEPARTMENT OF TRANSPORTATION
Caltrans
DESIGN

FUNCTIONAL SUPERVISOR: RON R. KRAEMER

CALCULATED-DESIGNED BY: MARK S. LEICHTFUSS
CHECKED BY: AMJED HETTINI

REVISED BY
DATE REVISED

LAST REVISION 12-03-08
DATE PLOTTED => 22-DEC-2009
TIME PLOTTED => 07:56

Dist	COUNTY	ROUTE	POST MILES TOTAL PROJECT	SHEET No.	TOTAL SHEETS
05	Mon	1	12.1	18	26

REGISTERED CIVIL ENGINEER 12-03-08 DATE

12-14-09
PLANS APPROVAL DATE

REGISTERED PROFESSIONAL ENGINEER MARK S. LEICHTFUSS No. 69124 Exp. 6-30-10 CIVIL STATE OF CALIFORNIA

THE STATE OF CALIFORNIA OR ITS OFFICERS OR AGENTS SHALL NOT BE RESPONSIBLE FOR THE ACCURACY OR COMPLETENESS OF SCANNED COPIES OF THIS PLAN SHEET.

NOTE: (N) NOT A SEPARATE PAY ITEM. FOR INFORMATION ONLY.

PLACE ASPHALT CONCRETE DIKE

STATION	LOCATION	PLACE HMA DIKE (TYPE F)
		LF
"A" 18+25 TO 18+75.0	L+	50
TOTAL		50

METAL BEAM GUARD RAILING

STATION	LOCATION	MBGR (WOOD POST)	REMOVE MBGR	MBGR BURIED POST END ANCHOR	Trans RAILING (TYPE WB)
		LF	LF	EA	EA
"A" 17+50.0 TO 18+75.0	L+	125			
"A" 17+90.0 TO 18+75.0	L+		85		
"A" 17+50.0	L+			1	
"A" 18+75.0	L+				1
TOTAL		125	85	1	1

ROADWAY QUANTITIES

STATION	LOCATION	HOT MIX ASPHALT (TYPE A)	PLACE HMA (Misc AREA)	CLASS 2 AGGREGATE BASE	ROADWAY EXCAVATION	(N) EMBANKMENT	IMPORTED BORROW
		TON	SQYD	CUYD	CUYD	CUYD	CUYD
"A" 18+25.0 TO 18+75.0	L+	20		45			
"A" 18+25 TO 18+75.0 DIKE (TYPE F)	L+	0.7					
"A" 12+05.0 TO 18+25.0	L+				180	410	30
"A" 12+90.0 TO 16+40.0 L+ 23.0 DITCH	L+	39	229				
FROM SHEET DQ-1		4.3					
FROM SHEET DQ-1			16				
FROM SHEET DQ-1							
TOTAL		64	245	45	180		30

EROSION CONTROL

STATION	LOCATION	EROSION CONTROL (COMPOST BLANKET)	(N) PURE LIVE SEED
		CUYD	LB
"A" 12+05.0 TO 18+75.0 Var L+	R+	50	18.6
TOTAL		50	

TEMPORARY CONSTRUCTION SITE BMPS

STATION	LOCATION	TEMPORARY SILT FENCE	TEMPORARY CONCRETE WASHOUT FACILITY	TEMPORARY CHECK DAM	TEMPORARY DRAINAGE INLET PROTECTION	TEMPORARY FIBER ROLL	TEMPORARY COVER	TEMPORARY FENCE (TYPE ESA)
		LF	EA	LF	EA	LF	SQFT	LF
"A" 12+05.0 TO 18+75.0	L+	670						
"A" 12+25.0 30.0 L+	L+		1					
"A" 10+50.0 60.0 L+	L+			50				
Sta VARIES	Var				10			
"A" 18+25.0 TO 18+75.0 33.0 L+	L+					50		
Sta VARIES	L+						2500	
"A" 13+00.0 TO 18+00.0 14.0 R+								440
TOTAL		670	1	50	10	50	2500	440

REINFORCED CONCRETE CRIB WALL

STATION	LOCATION	Reinf Conc CRIB WALL (TYPE B)	STRUCTURE BACKFILL (TYPE E)(CRIB WALL)	STRUCTURE Excav (CRIB WALL)	(N) PREPARE AND STAIN Conc
		SQFT	CUYD	CUYD	SQFT
"A" 18+38.2 TO 18+75.0	L+	519			519
"A" 18+38.2 TO 18+75.0	L+		201		
"A" 18+38.2 TO 18+75.0	L+			200	
TOTAL		519	201	200	519

SUMMARY OF QUANTITIES

Q-1

STATE OF CALIFORNIA - DEPARTMENT OF TRANSPORTATION
Caltrans®
DESIGN
FUNCTIONAL SUPERVISOR: RON R. KRAEMER
CALCULATED-DESIGNED BY: MARK S. LEICHTFUSS
CHECKED BY: AMJED HETTINI
REVISED BY
DATE REVISED

LAST REVISION 12-03-08 DATE PLOTTED => 22-DEC-2009 TIME PLOTTED => 07:57

DIST	COUNTY	ROUTE	POST MILES TOTAL PROJECT	SHEET NO.	TOTAL SHEETS
05	Mon	1	12.1	19	26

Randell D. Hiatt
REGISTERED CIVIL ENGINEER

June 6, 2008
PLANS APPROVAL DATE

REGISTERED PROFESSIONAL ENGINEER
Randell D. Hiatt
No. C50200
Exp. 6-30-09
CIVIL
STATE OF CALIFORNIA

The State of California or its officers or agents shall not be responsible for the accuracy or completeness of electronic copies of this plan sheet.

To accompany plans dated 12-14-09

NOTES:

1. When necessary to place dike in front of face of guard railing, only Type C dike may be used. For dike details, see Standard Plan A87B.
2. For standard railing post embedment, see Standard Plans A77C3.
3. Guard railing delineation to be used where shown on the Project Plans.
4. When dike or curb is placed under guard railing, the maximum height of the dike or curb shall be 4". Mountable dike should not be used. For dike and curb details, see Revised Standard Plans RSP A87A and Standard Plan A87B.
5. For details of typical distance between the face of rail and hinge point, see Standard Plan A77C3.

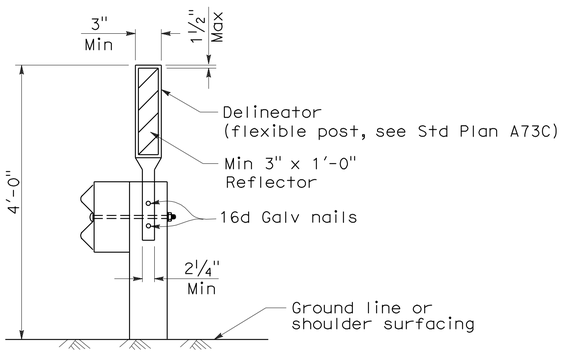

GUARD RAILING DELINEATION

See Note 3

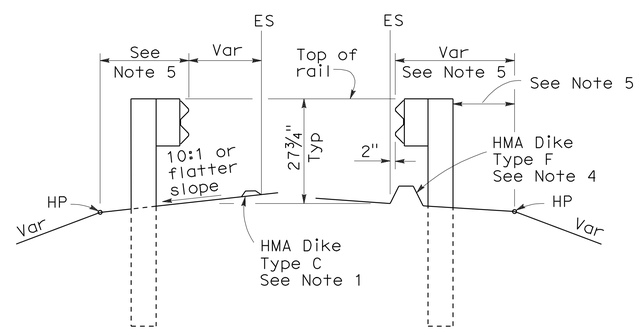

DIKE POSITIONING

See Note 1

STATE OF CALIFORNIA
DEPARTMENT OF TRANSPORTATION

METAL BEAM GUARD RAILING TYPICAL RAILING DELINEATION AND DIKE POSITIONING DETAILS

NO SCALE

RSP A77C4 DATED JUNE 6, 2008 SUPERSEDES STANDARD PLAN A77C4
DATED MAY 1, 2006 - PAGE 47 OF THE STANDARD PLANS BOOK DATED MAY 2006.

REVISED STANDARD PLAN RSP A77C4

2006 REVISED STANDARD PLAN RSP A77C4

12-10-07

DIST	COUNTY	ROUTE	POST MILES TOTAL PROJECT	SHEET NO.	TOTAL SHEETS
05	Mon	1	12.1	20	26

REGISTERED CIVIL ENGINEER

June 5, 2009
PLANS APPROVAL DATE

Glenn DeCou No. C34547 Exp. 9-30-09 CIVIL — REGISTERED PROFESSIONAL ENGINEER — STATE OF CALIFORNIA

The State of California or its officers or agents shall not be responsible for the accuracy or completeness of electronic copies of this plan sheet.

To accompany plans dated 12-14-09

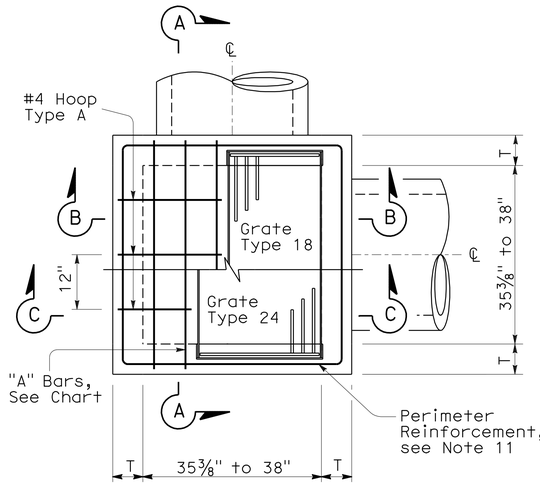

STANDARD TYPE G2 OR G4

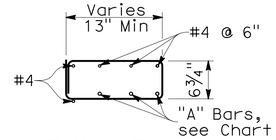

TYPICAL SECTION
(HOOP TYPE A)

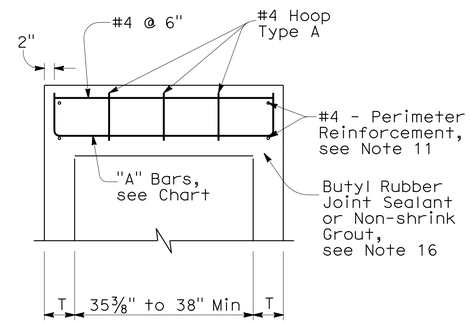

SECTION A-A

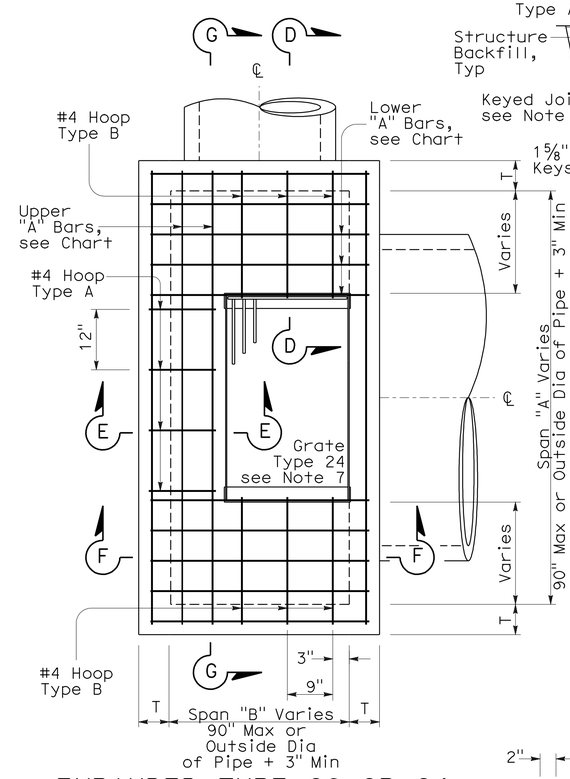

EXPANDED TYPE G2 OR G4
(Top Rebar Not Shown)

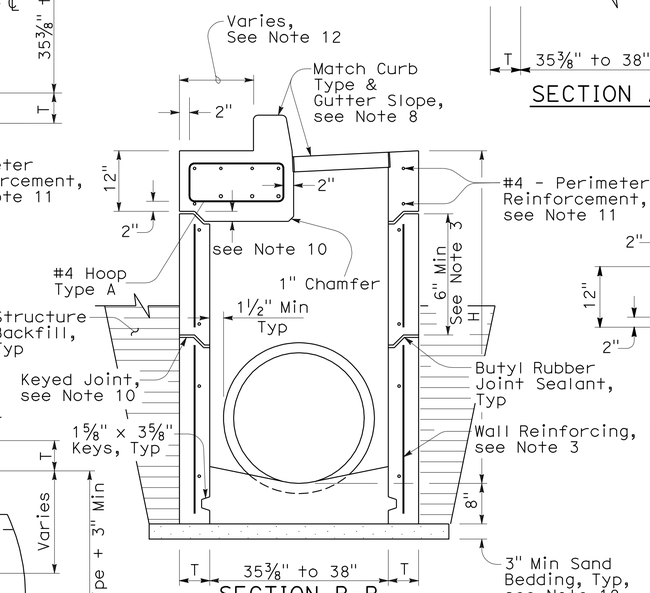

SECTION B-B
(with G4 Top)

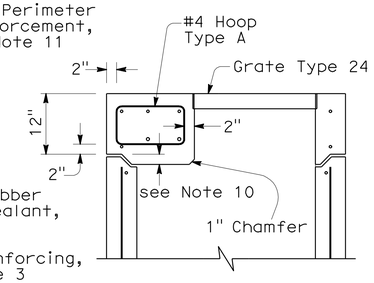

SECTION C-C
(with G2 Top)

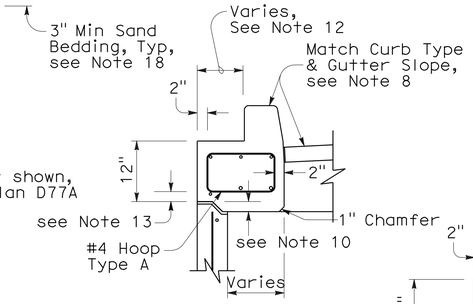

SECTION E-E
(with G4 Top)

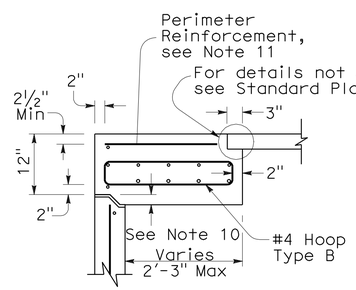

SECTION D-D

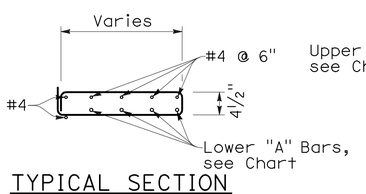

TYPICAL SECTION
(HOOP TYPE B)

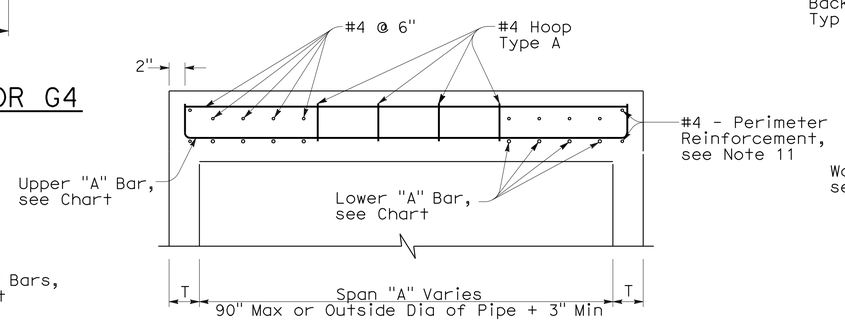

SECTION G-G

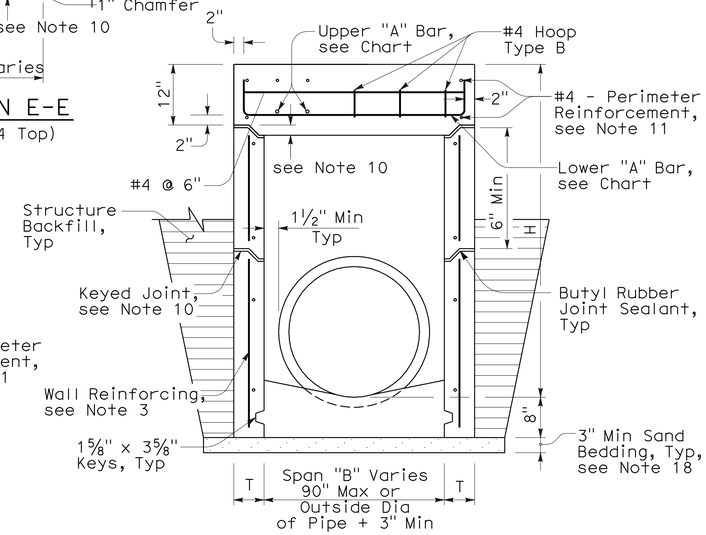

SECTION F-F
(with G2 Top)

NOTES:

1. "H" is the difference in elevation between the outlet pipe flow line and the normal gutter grade line undepressed.
2. For "T" wall thickness: T=6" when "H" is 8' or less. T=8" when "H" is over 8'.
3. Wall reinforcing not required when "H" is 8' or less and the unsupported width or length is 6'-0" or less. Reinforce wall exceeding these limits with #4 bars @ 1'-6" ± centers placed 2" clear to the inside of inlet unless otherwise shown. Short independent wall sections or height adjustment rings 6" to 24" high must have a minimum of two #4 horizontal bars.
4. Seal pre-cast inlets connection openings between wall and pipe with non-shrink grout or resilient connectors as specified in the Special Provisions.
5. Steps - None required where "H" is less than 2'-6". Where "H" is 2'-6" or more, install steps with lowest rung 1'-0" above the floor and highest rung not more than 6" below bottom of lid. The distance between steps must not exceed 1'-0" and be uniform throughout the length of the wall. Place steps in the wall without an opening. Steps inserts may be substituted for the bar steps. Step inserts must comply with State Industrial Safety Requirements. See Standard Plan D74C for step details.
6. Pipe(s) can be placed in any wall.
7. Set inlet so that grate bars are parallel to direction of principal surface flow.
8. Type G4 inlet can use Grate Type 18 or 24. Type G2 inlet uses Grate Type 24. See Revised Standard Plan RSP D77A and Standard Plan D77B for grate and frame details and weights of miscellaneous Iron and Steel.
9. G4 inlet details are the same as the G2 with the addition of a curb and sloped grate that matches the adjacent curb and gutter depression. See Standard Plans D78A & D78B for gutter and inlet depresssion details. See Revised Standard Plan RSP A87A & Standard Plan A87B for Curb and Dike Details.
10. Provide pre-cast inlets with separate top sections for final grade adjustment under Standard Specifcation Section 51-1.02. Provide keyed joints between the top and wall and multiple wall sections. Joint design may vary but must be 1" to 3" in depth.
11. Perimeter reinforcement serves as a rigid frame to position and attach the required structural reinforcement and may be tack welded at outer corners when using ASTM A706 weldable bars.
12. This dimension will vary with different grates, curbs types, box width and wall thickness.
13. 2" unless inlet is expanded in the Span "A" direction, then clearance is 2" plus the diameter of the lower "A" bar.
14. Place "A" Bars at an angle so hooked ends will maintain 2" clear coverage.
15. Refer to Standard Plan D73, Table A for concrete quantities.
16. Non-shrink grout can be used for upper most joint to facilitate final top grade adjustment.
17. Slope inlet floors 4:1 towards the outlet pipe. Pre-cast inlets may have monolithic sloped floors, flat floors, or no floors in which case a sloped floor must be cast in the field. Inlet floors do not require reinforcing.
18. Extend sand bedding under all structure backfill.

TOP REINFORCEMENT CHART

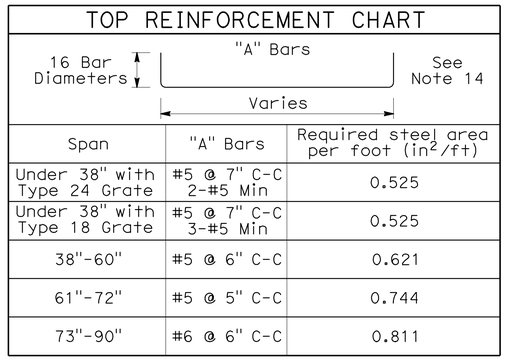

Span	"A" Bars	Required steel area per foot (in^2/ft)
Under 38" with Type 24 Grate	#5 @ 7" C-C 2-#5 Min	0.525
Under 38" with Type 18 Grate	#5 @ 7" C-C 3-#5 Min	0.525
38"-60"	#5 @ 6" C-C	0.621
61"-72"	#5 @ 5" C-C	0.744
73"-90"	#6 @ 6" C-C	0.811

STATE OF CALIFORNIA
DEPARTMENT OF TRANSPORTATION

DRAINAGE INLETS (PRECAST)

NO SCALE

NSP D73A DATED JUNE 5, 2009 SUPPLEMENTS THE STANDARD PLANS BOOK DATED MAY 2006.

NEW STANDARD PLAN NSP D73A

2006 NEW STANDARD PLAN NSP D73A

3-16-09

DIST	COUNTY	ROUTE	POST MILES TOTAL PROJECT	SHEET NO.	TOTAL SHEETS
05	Mon	1	12.1	21	26

Randell D. Hiatt
REGISTERED CIVIL ENGINEER

June 6, 2008
PLANS APPROVAL DATE

REGISTERED PROFESSIONAL ENGINEER
Randell D. Hiatt
No. C50200
Exp. 6-30-09
CIVIL
STATE OF CALIFORNIA

The State of California or its officers or agents shall not be responsible for the accuracy or completeness of electronic copies of this plan sheet.

To accompany plans dated 12-14-09

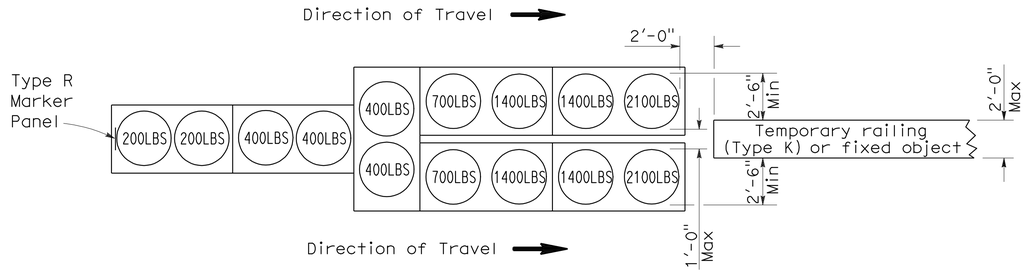

ARRAY 'TU14'

Approach speed 45 mph or more

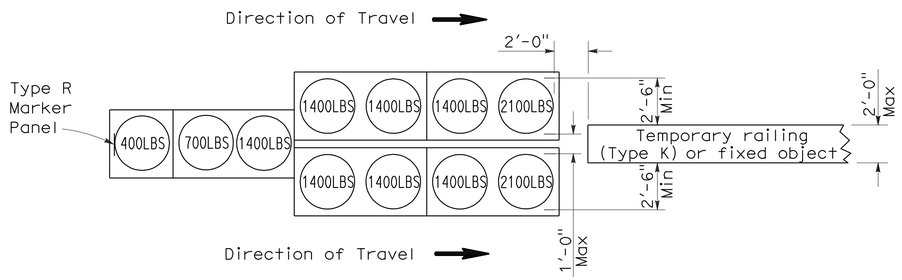

ARRAY 'TU11'

Approach speed less than 45 mph

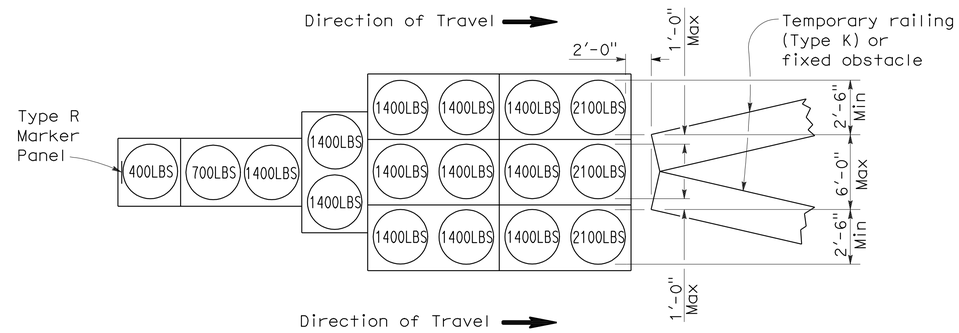

ARRAY 'TU17'

Approach speed less than 45 mph

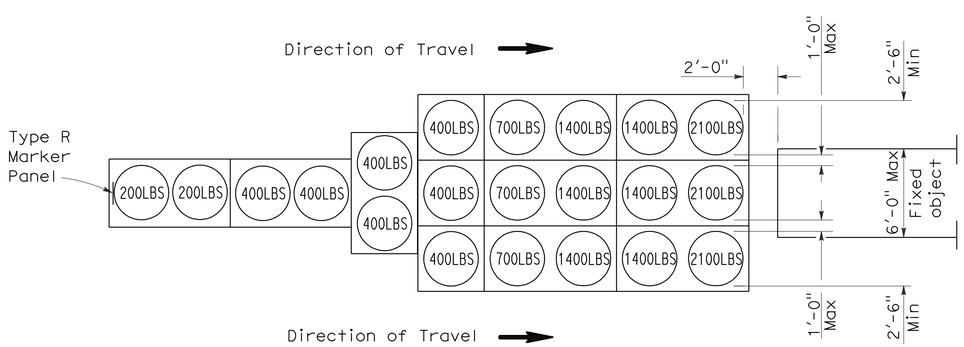

ARRAY 'TU21'

Approach speed 45 mph or more

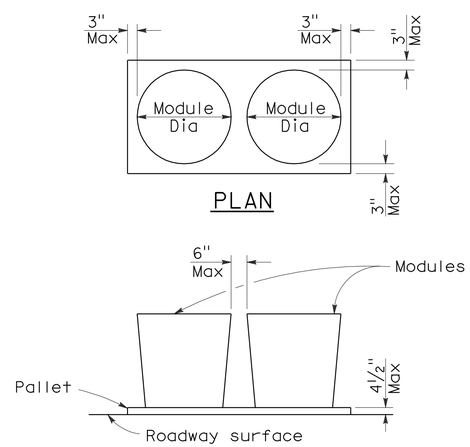

ELEVATION

CRASH CUSHION PALLET DETAIL

See Note 7

NOTES:

1. (XXX) Indicates sand filled module location and weight of sand in pounds for each module. Module spacing is based on the greater diameter of the module.
2. All sand weights are nominal.
3. Temporary crash cushion arrays shall not encroach on the traveled way.
4. Place the top of Type R marker panel 1" below the module lid.
5. Refer to Standard Plan A73B for marker details.
6. Approach speeds indicated conform to NCHRP 350 Report criteria.
7. Use of pallets is optional.

STATE OF CALIFORNIA
DEPARTMENT OF TRANSPORTATION

TEMPORARY CRASH CUSHION, SAND FILLED (UNIDIRECTIONAL)

NO SCALE

RSP T1A DATED JUNE 6, 2008 SUPERSEDES STANDARD PLAN T1A
DATED MAY 1, 2006 - PAGE 211 OF THE STANDARD PLANS BOOK DATED MAY 2006.

REVISED STANDARD PLAN RSP T1A

2006 REVISED STANDARD PLAN RSP T1A

DIST	COUNTY	ROUTE	POST MILES TOTAL PROJECT	SHEET NO.	TOTAL SHEETS
05	Mon	1	12.1	22	26

Randell D. Hiatt
REGISTERED CIVIL ENGINEER

June 6, 2008
PLANS APPROVAL DATE

REGISTERED PROFESSIONAL ENGINEER
Randell D. Hiatt
No. C50200
Exp. 6-30-09
CIVIL
STATE OF CALIFORNIA

The State of California or its officers or agents shall not be responsible for the accuracy or completeness of electronic copies of this plan sheet.

To accompany plans dated 12-14-09

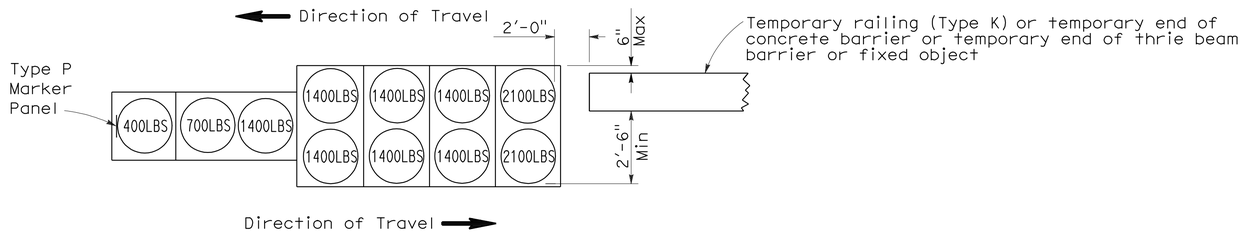

ARRAY 'TB11'

Approach speed less than 45 mph

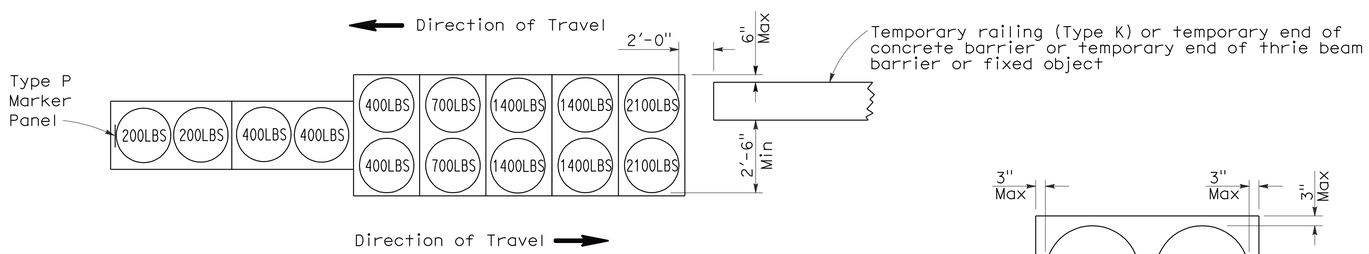

ARRAY 'TB14'

Approach speed 45 mph or more

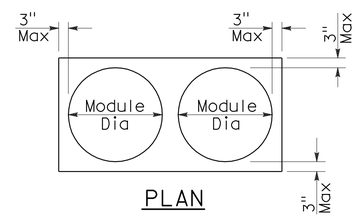

PLAN

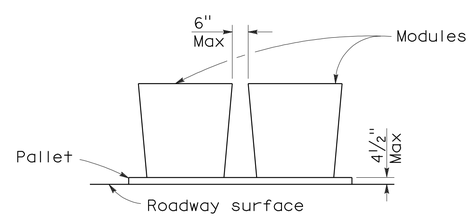

ELEVATION

CRASH CUSHION PALLET DETAIL

See Note 7

NOTES:

1. (XXX) Indicates sand filled module location and weight of sand in pounds for each module. Module spacing is based on the greater diameter of the module.
2. All sand weights are nominal.
3. Temporary crash cushion arrays shall not encroach on the traveled way.
4. Place the Type P marker panel so that the bottom of the panel rests upon the pallet.
5. Refer to Standard Plan A73B for marker details.
6. Approach speeds indicated conform to NCHRP 350 Report criteria.
7. Use of pallets is optional.

STATE OF CALIFORNIA
DEPARTMENT OF TRANSPORTATION

TEMPORARY CRASH CUSHION, SAND FILLED (BIDIRECTIONAL)

NO SCALE

RSP T1B DATED JUNE 6, 2008 SUPERSEDES STANDARD PLAN T1B
DATED MAY 1, 2006 - PAGE 212 OF THE STANDARD PLANS BOOK DATED MAY 2006.

REVISED STANDARD PLAN RSP T1B

2006 REVISED STANDARD PLAN RSP T1B

5-15-08

DIST	COUNTY	ROUTE	POST MILES TOTAL PROJECT	SHEET NO.	TOTAL SHEETS
05	Mon	1	12.1	23	26

Randell D. Hiatt
REGISTERED CIVIL ENGINEER

June 6, 2008
PLANS APPROVAL DATE

REGISTERED PROFESSIONAL ENGINEER
Randell D. Hiatt
No. C50200
Exp. 6-30-09
CIVIL
STATE OF CALIFORNIA

The State of California or its officers or agents shall not be responsible for the accuracy or completeness of electronic copies of this plan sheet.

To accompany plans dated 12-14-09

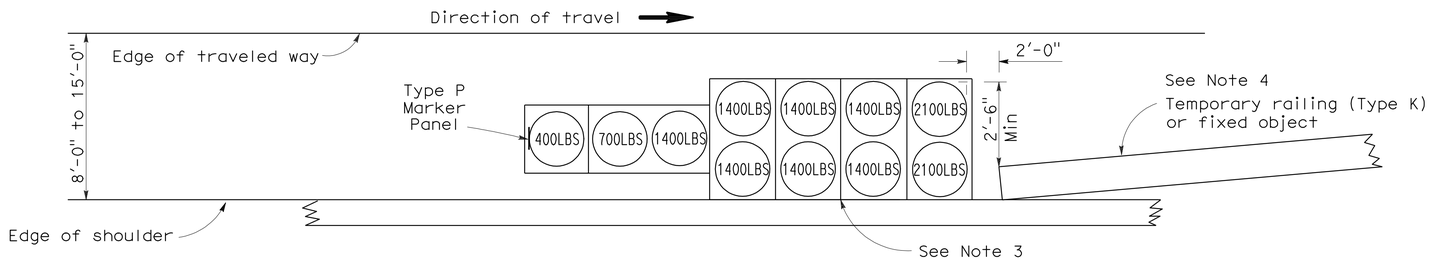

ARRAY 'TS11'

Approach speed less than 45 mph
See Note 9

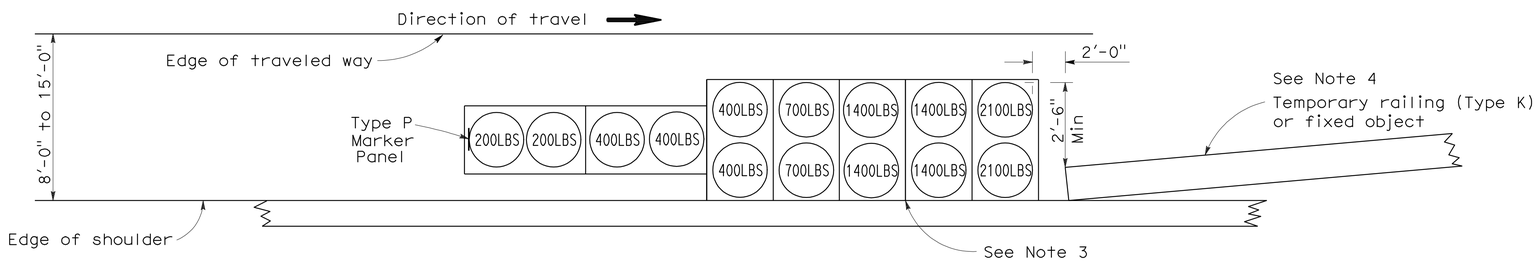

ARRAY 'TS14'

Approach speed 45 mph or more
See Note 9

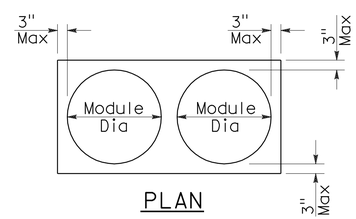

PLAN

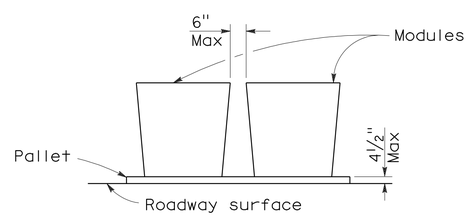

ELEVATION

CRASH CUSHION PALLET DETAIL

See Note 11

NOTES:

1. (XXX) Indicates sand filled module location and weight of sand in pounds for each module. Module spacing is based on the greater diameter of the module.
2. All sand weights are nominal.
3. The temporary crash cushion arrays shown on this plan shall be used only in locations where there will be traffic on one side of the temporary crash cushion array.
4. If the fixed object or approach end of the temporary railing is less than 15'-0" from the edge of traveled way, a temporary crash cushion is required in a construction or work zone.
5. Temporary crash cushion arrays shall not encroach on the traveled way.
6. Arrays for median shoulders shall conform to details shown on this plan for outside shoulders.
7. Place the Type P marker panel so that the bottom of the panel rests upon the pallet and faces traffic.
8. Refer to Standard Plan A73B for marker details.
9. For shoulder widths less than 8'-0", appropriate approved crash cushion protection, other than sand filled modules, shall be provided at fixed objects and at approach ends of temporary railing. The specific type of crash cushion shall be as shown on the project plans or as specified in the Special Provisions, or if not shown on the project plans or specified in the Special Provisions, shall be as approved by the Engineer.
10. Approach speeds indicated conform to NCHRP 350 Report criteria.
11. Use of pallets is optional.

STATE OF CALIFORNIA
DEPARTMENT OF TRANSPORTATION

TEMPORARY CRASH CUSHION, SAND FILLED (SHOULDER INSTALLATIONS)

NO SCALE

RSP T2 DATED JUNE 6, 2008 SUPERSEDES STANDARD PLAN T2
DATED MAY 1, 2006 - PAGE 213 OF THE STANDARD PLANS BOOK DATED MAY 2006.

REVISED STANDARD PLAN RSP T2

2006 REVISED STANDARD PLAN RSP T2

5-15-08

DIST	COUNTY	ROUTE	POST MILES TOTAL PROJECT	SHEET NO.	TOTAL SHEETS
05	Mon	1	12.1	24	26

Robert B Schott
LICENSED LANDSCAPE ARCHITECT

April 3, 2009
PLANS APPROVAL DATE

LICENSED LANDSCAPE ARCHITECT
Robert B. Schott 3695
Signature
11-30-10
Renewal Date
2-25-09
Date
STATE OF CALIFORNIA

The State of California or its officers or agents shall not be responsible for the accuracy or completeness of electronic copies of this plan sheet.

To accompany plans dated 12-14-09

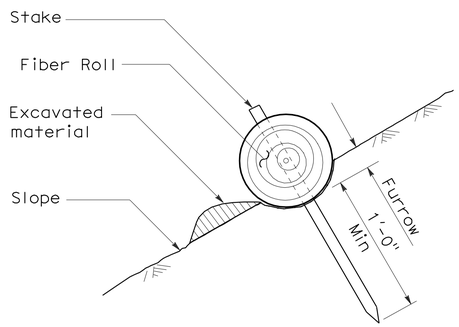

SECTION

TEMPORARY FIBER ROLL (TYPE 1)

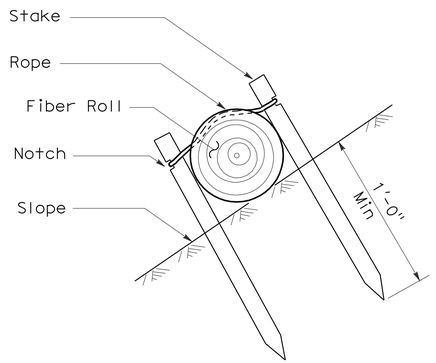

SECTION

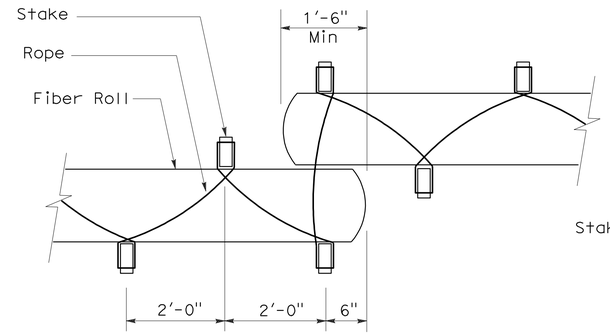

PLAN

TEMPORARY FIBER ROLL (TYPE 2)

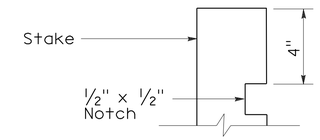

ELEVATION

STAKE NOTCH DETAIL

NOTES:

1. Temporary fiber roll spacing varies depending upon slope inclination.
2. Installations shown in the perspectives are for slope inclination of 10:1 and steeper.

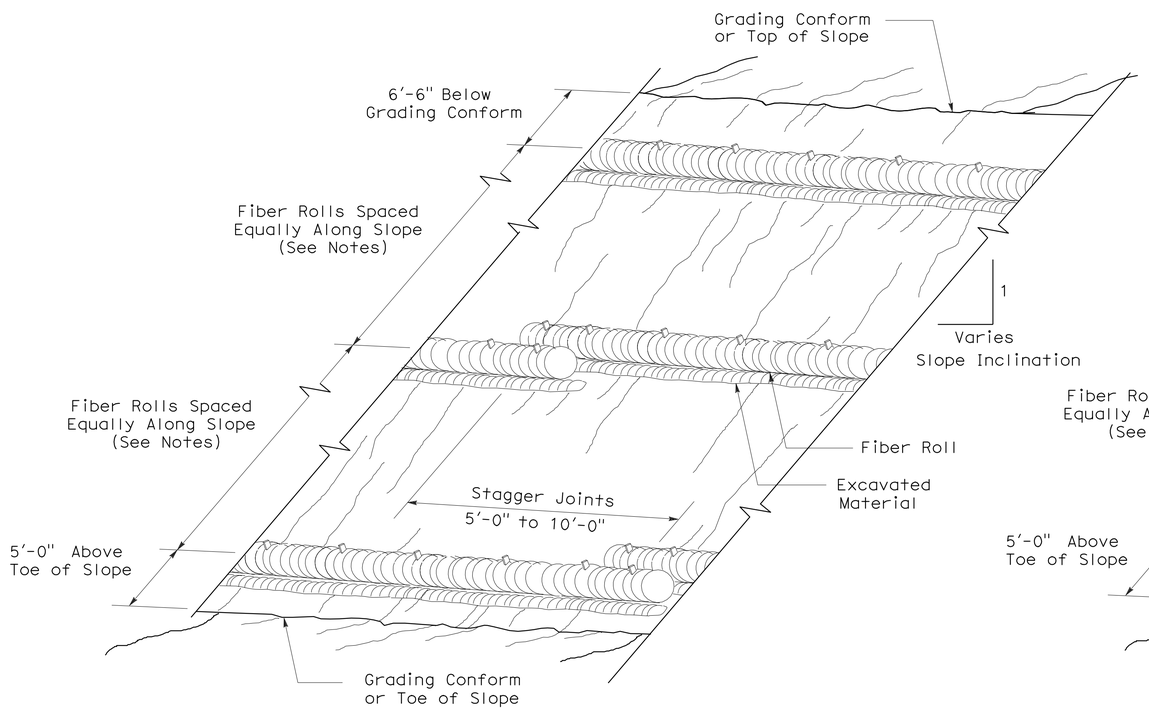

PERSPECTIVE

TEMPORARY FIBER ROLL (TYPE 1)

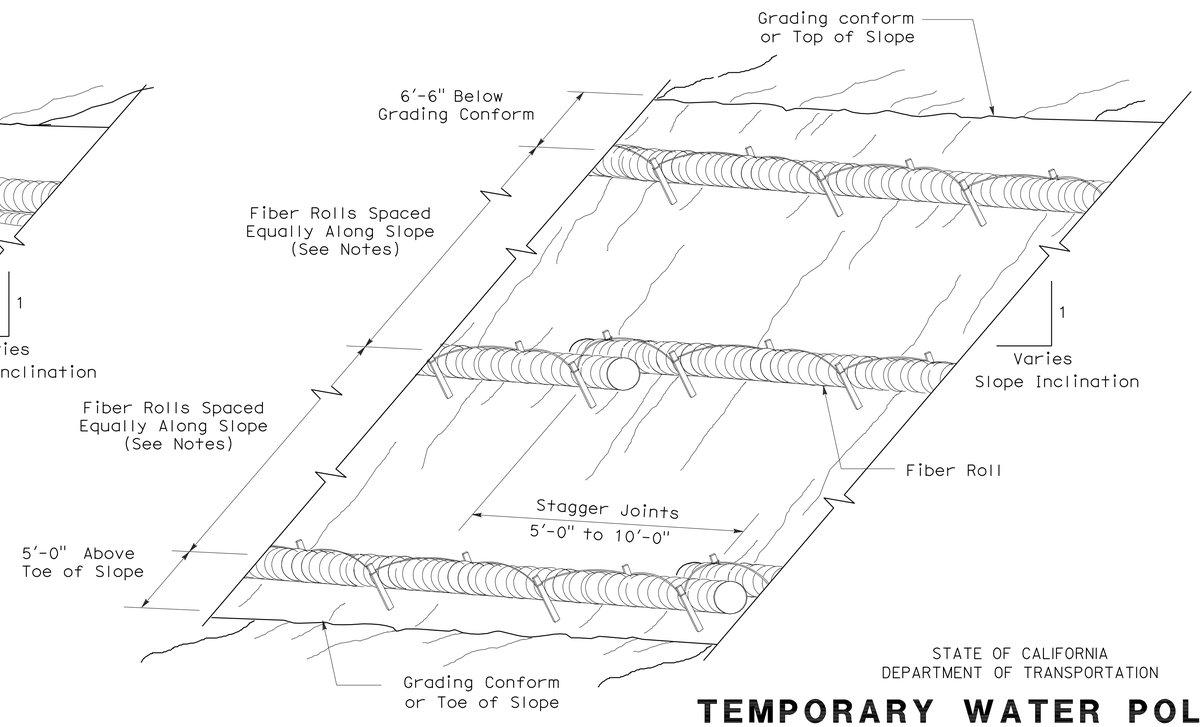

PERSPECTIVE

TEMPORARY FIBER ROLL (TYPE 2)

STATE OF CALIFORNIA
DEPARTMENT OF TRANSPORTATION

TEMPORARY WATER POLLUTION CONTROL DETAILS (TEMPORARY FIBER ROLL)

NO SCALE

RSP T56 DATED APRIL 3, 2009 SUPERSEDES STANDARD PLAN T56 DATED MAY 1, 2006 - PAGE 232 OF THE STANDARD PLANS BOOK DATED MAY 2006.

REVISED STANDARD PLAN RSP T56

2006 REVISED STANDARD PLAN RSP T56

2-23-09

DIST	COUNTY	ROUTE	POST MILES TOTAL PROJECT	SHEET NO.	TOTAL SHEETS
05	Mon	1	12.1	25	26

LICENSED LANDSCAPE ARCHITECT

August 15, 2008
PLANS APPROVAL DATE

The State of California or its officers or agents shall not be responsible for the accuracy or completeness of electronic copies of this plan sheet.

LICENSED LANDSCAPE ARCHITECT — Robert B. Schott — Signature — 11-04-08 Renewal Date — 08-11-08 Date — STATE OF CALIFORNIA

To accompany plans dated 12-14-09

FLEXIBLE SEDIMENT BARRIER SPACING TABLE

SLOPE OF ROADWAY (PERCENT)	0 to 0.9	1 to 1.9	2 to 2.9	3 to 4	5+
INTERVAL BETWEEN BARRIERS	50′	35′	30′	25′	20′
ANGLE FROM FACE OF CURB	70°	70°	70°	45°	45°
SUGGESTED BARRIER LENGTH	6′	6′	6′	6′	6′

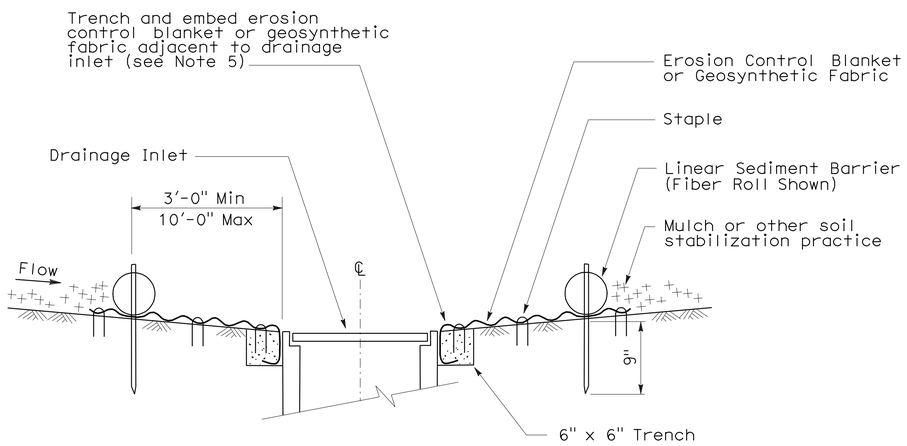

SECTION A-A

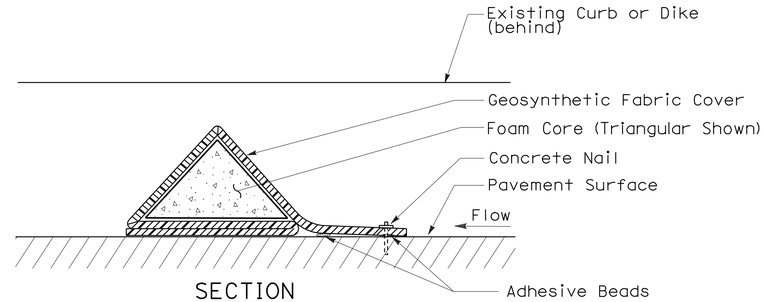

SECTION

FLEXIBLE SEDIMENT BARRIER DETAIL (FOAM BARRIER SHOWN)

NOTES:

1. See Standard Plan T51 for Temporary Silt Fence.
2. Dimensions may vary to fit field conditions.
3. Install a minimum of 3 flexible sediment barriers upstream of each drainage inlet to be protected.
4. Position erosion control blanket or geosynthetic fabric at edge of concrete apron and secure in trench.
5. Erosion control blanket or geosynthetic fabric is not required if the area adjacent to the drainage inlet is vegetated.

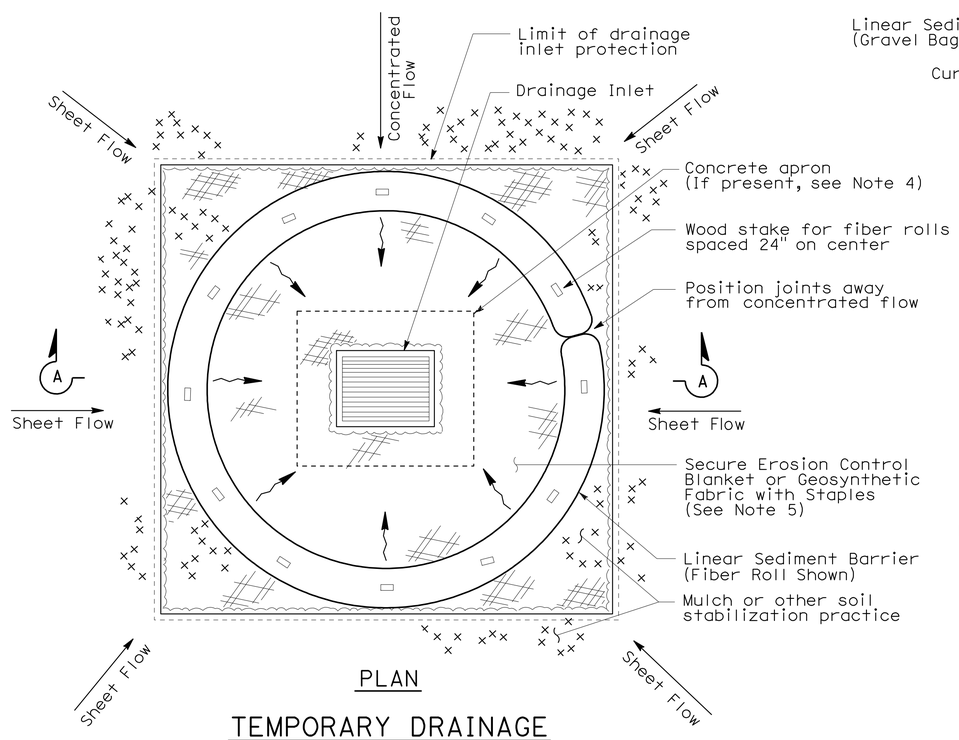

PLAN

TEMPORARY DRAINAGE INLET PROTECTION (TYPE 4A)

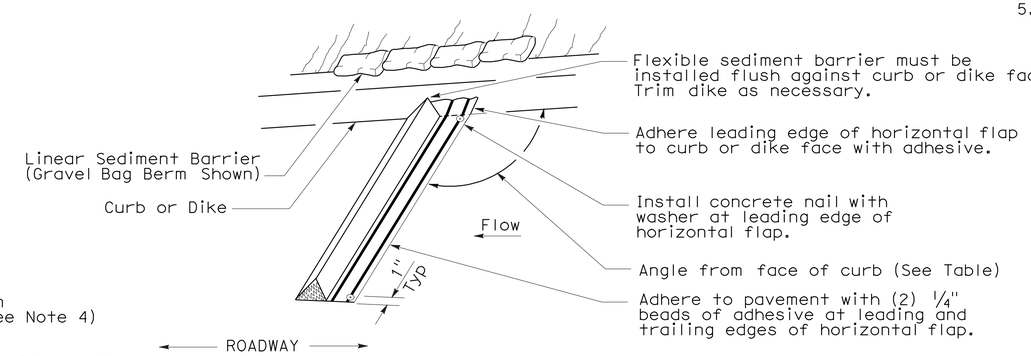

PERSPECTIVE

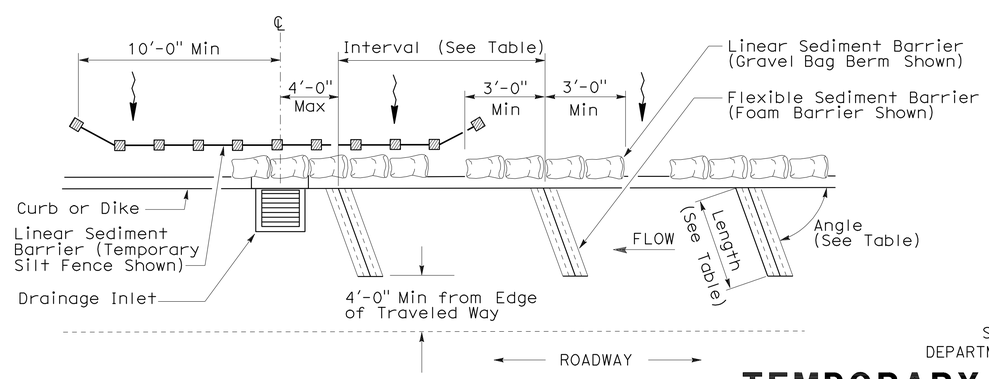

PLAN

TEMPORARY DRAINAGE INLET PROTECTION (TYPE 4B) FLEXIBLE SEDIMENT BARRIER

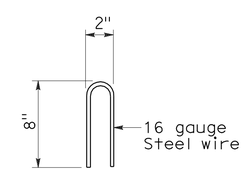

STAPLE DETAIL

STATE OF CALIFORNIA
DEPARTMENT OF TRANSPORTATION

TEMPORARY WATER POLLUTION CONTROL DETAILS (TEMPORARY DRAINAGE INLET PROTECTION)

NO SCALE

NSP T63 DATED AUGUST 15, 2008 SUPPLEMENTS THE STANDARD PLANS BOOK DATED MAY 2006.

NEW STANDARD PLAN NSP T63

2006 NEW STANDARD PLAN NSP T63

DIST	COUNTY	ROUTE	POST MILES TOTAL PROJECT	SHEET NO.	TOTAL SHEETS
05	Mon	1	12.1	26	26

LICENSED LANDSCAPE ARCHITECT

April 3, 2009
PLANS APPROVAL DATE

LICENSED LANDSCAPE ARCHITECT Robert B. Schott 3625 Signature 11-30-10 Renewal Date 2-25-09 Date STATE OF CALIFORNIA

The State of California or its officers or agents shall not be responsible for the accuracy or completeness of electronic copies of this plan sheet.

To accompany plans dated 12-14-09

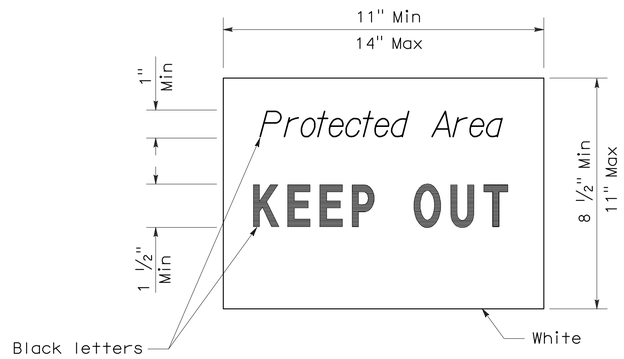

SIGN DETAIL

NOTE:

1. Temporary silt fence and temporary straw bale barrier shown for reference purposes only.

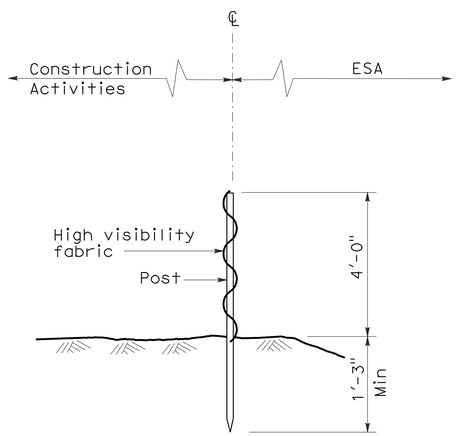

SECTION
TEMPORARY FENCE (TYPE ESA)

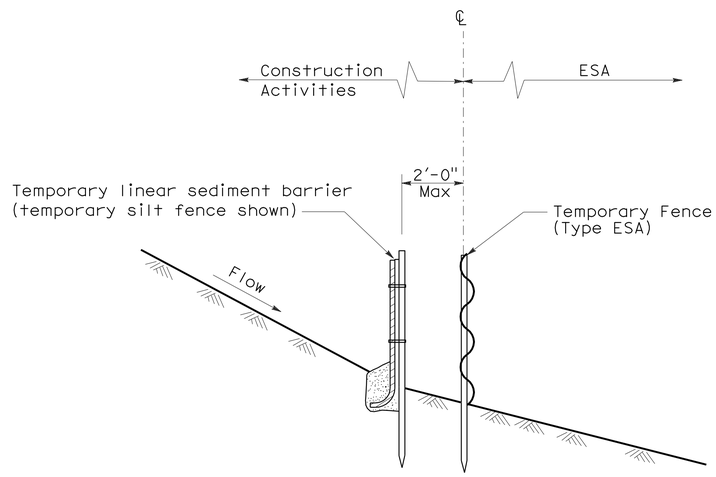

SECTION
PLACEMENT DETAIL
FOR TEMPORARY LINEAR SEDIMENT BARRIER
USED WITH TEMPORARY
FENCE (TYPE ESA)
(See Note 1)

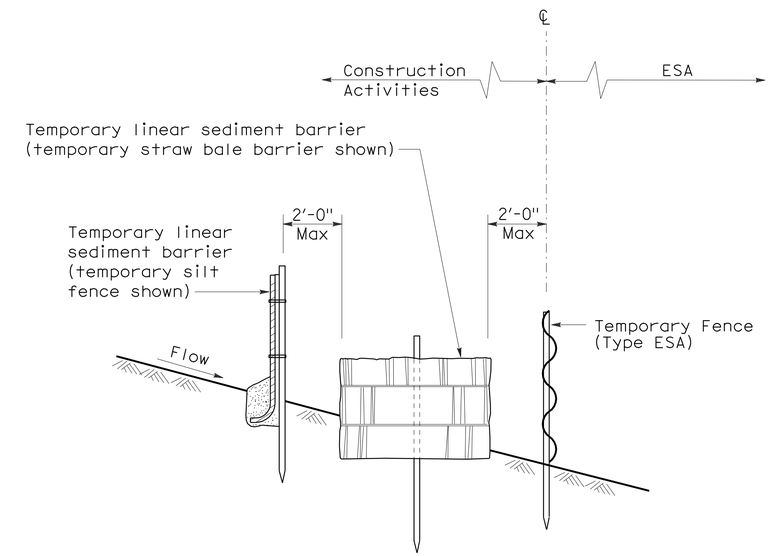

SECTION
PLACEMENT DETAIL
FOR TEMPORARY SILT FENCE
AND TEMPORARY STRAW BALE BARRIER
USED WITH TEMPORARY FENCE (TYPE ESA)
(See Note 1)

STATE OF CALIFORNIA
DEPARTMENT OF TRANSPORTATION

TEMPORARY WATER POLLUTION CONTROL DETAILS [TEMPORARY FENCE (TYPE ESA)]

NO SCALE

NSP T65 DATED APRIL 3, 2009 SUPPLEMENTS
THE STANDARD PLANS BOOK DATED MAY 2006.

NEW STANDARD PLAN NSP T65

2006 NEW STANDARD PLAN NSP T65