Dist	COUNTY	ROUTE	POST MILES TOTAL PROJECT	SHEET No.	TOTAL SHEETS
05	Mon	1	72.4/R101.6	1	51

INDEX OF PLANS

SHEET No.	DESCRIPTION
1	TITLE AND LOCATION MAP
2	LOCATIONS OF CONSTRUCTION
3	CONSTRUCTION DETAILS
4-5	CONSTRUCTION AREA SIGNS
6-42	ELECTRICAL PLANS
43-51	REVISED STANDARD PLANS

THE STANDARD PLANS LIST APPLICABLE TO THIS CONTRACT IS INCLUDED IN THE NOTICE TO BIDDERS AND SPECIAL PROVISIONS BOOK.

STATE OF CALIFORNIA

DEPARTMENT OF TRANSPORTATION

PROJECT PLANS FOR CONSTRUCTION ON

STATE HIGHWAY

IN MONTEREY COUNTY
AT VARIOUS LOCATIONS
FROM 0.1 MILE NORTH OF CARMEL RIVER BRIDGE
TO 0.4 MILE SOUTH OF SANTA CRUZ COUNTY LINE

TO BE SUPPLEMENTED BY STANDARD PLANS DATED MAY 2006

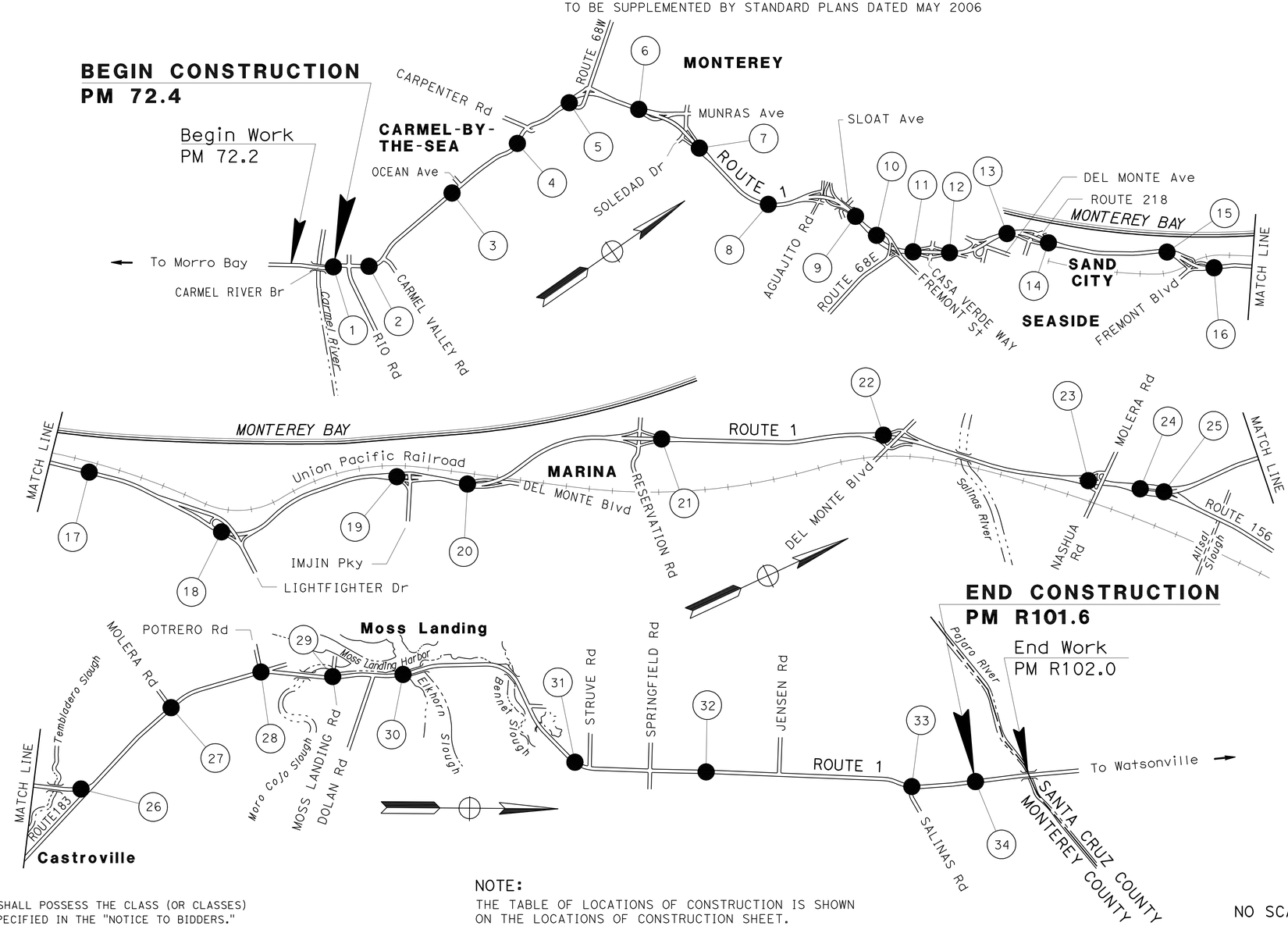

LOCATION MAP

PROJECT MANAGER DOUG HESSING

DESIGN ENGINEER WILLARD TULLOCK

THE CONTRACTOR SHALL POSSESS THE CLASS (OR CLASSES) OF LICENSE AS SPECIFIED IN THE "NOTICE TO BIDDERS."

NOTE:
THE TABLE OF LOCATIONS OF CONSTRUCTION IS SHOWN ON THE LOCATIONS OF CONSTRUCTION SHEET.

PROJECT ENGINEER REGISTERED CIVIL ENGINEER — DATE 03-13-09

REGISTERED PROFESSIONAL ENGINEER WILLARD D. TULLOCK II No. 29778 Exp. 3-31-11 CIVIL STATE OF CALIFORNIA

May 4, 2009
PLANS APPROVAL DATE

THE STATE OF CALIFORNIA OR ITS OFFICERS OR AGENTS SHALL NOT BE RESPONSIBLE FOR THE ACCURACY OR COMPLETENESS OF SCANNED COPIES OF THIS PLAN SHEET.

CONTRACT No. **05-0N2604**

LAST REVISION 03-16-09 DATE PLOTTED => 20-JAN-2010 TIME PLOTTED => 05:46

Dist	COUNTY	ROUTE	POST MILES TOTAL PROJECT	SHEET No.	TOTAL SHEETS
05	Mon	1	72.4/R101.6	2	51

REGISTERED CIVIL ENGINEER 03-16-09 DATE

5-4-09
PLANS APPROVAL DATE

REGISTERED PROFESSIONAL ENGINEER WILLARD D. TULLOCK II No. 29778 Exp. 3-31-11 CIVIL STATE OF CALIFORNIA

THE STATE OF CALIFORNIA OR ITS OFFICERS OR AGENTS SHALL NOT BE RESPONSIBLE FOR THE ACCURACY OR COMPLETENESS OF SCANNED COPIES OF THIS PLAN SHEET.

LOCATIONS OF CONSTRUCTION

LOCATION No.	LOCATION	POST MILE	SIDE OF HIGHWAY	DESCRIPTION
1	S OF OLIVER Rd	72.40	NB	MVDS
2	S OF CARMEL VALLEY Rd	72.76	NB	MVDS
3	S OF OCEAN Ave	73.71	NB	MVDS
4	S OF CARPENTER Rd	74.40	NB	MVDS
5	N OF CARPENTER Rd	74.92	NB	REP & VSN
		75.00	SB	MVDS, CCTV & AP
6	S OF MUNRAS Ave UC	R75.58	SB	MVDS
7	N OF SOLEDAD Dr UC	R76.21	SB	MVDS & CCTV
8	S OF AGUAJITO Rd UC	R76.94	NB	MVDS
9	N OF SLOAT Ave UC	R77.63	SB	MVDS & CCTV
10	S OF Rte 68 Sep	R77.89	SB	REP & VSN
		R78.01	NB	MVDS, CCTV, AP & VSN
11	N OF Fremont St OC	R78.29	NB	REP & VSN
		R78.33	SB	MVDS & AP
12	N OF CASA VERDE WAY UC	R78.51	SB	MVDS & AP
		R78.75	NB	REP & VSN
13	N OF DEL MONTE Ave OH	R78.97	NB	REP & VSN
		R79.02	SB	MVDS, CCTV & AP
		R79.16	SB	REP & VSN
		R79.20	NB	REP & VSN
14	N OF CANYON DEL REY Blvd UC	R79.47	NB	MVDS
15	S OF FREMONT Blvd UC	R80.45	NB	MVDS & AP
		R80.48	SB	REP & VSN
16	N OF FREMONT Blvd UC	R80.86	NB	MVDS
17	N OF FREMONT Blvd UC	R81.56	NB	MVDS
18	S OF LIGHTFIGHTER Dr OC*	R82.79	NB	MVDS
19	S OF IMJIN Pky OC**	R84.33	NB	MVDS
20	S OF DEL MONTE Blvd UC	R84.97	NB	MVDS
21	N OF RESERVATION Rd UC	R86.69	NB	MVDS
22	S OF DEL MONTE Blvd OC	R88.35	SB	REP & VSN
		R88.36	NB	REP & VSN
		R88.58	NB	MVDS & AP
		R88.66	SB	REP & VSN
23	S OF MOLERA/NASHUA Rd OC	R90.17	NB	REP & VSN
		90.37	NB	MVDS & AP
24	S OF Rte 156 Sep	90.74	NB	MVDS
25	Rte 156 Sep	90.98	SB	MVDS & CCTV
26	S OF Rte 183 Jct	92.10	NB	MVDS, CCTV & AP
	Rte 183 Jct	92.21	NB	REP & VSN
27	MOLERA Rd	94.39	NB	MVDS, AP & VSN
28	POTRERO Rd	95.19	NB	MVDS, AP & VSN
29	MOSS LANDING Rd	95.83	SB	MVDS, CCTV, AP & VSN
30	S OF ELKHORN SLOUGH Br	96.42	NB	MVDS
31	S OF STRUVE Rd	98.20	SB	MVDS
32	S OF JENSEN Rd	99.30	SB	MVDS
33	SALINAS Rd	T101.02	SB	MVDS, CCTV, AP & VSN
34	S OF PAJARO RIVER Br	R101.58	NB	MVDS

* FORMER FORT ORD MAIN ENTRANCE
** FORMER 12th St

ABBREVIATIONS:

AP	ACCESS POINT
MVDS	MICROWAVE VEHICLE DETECTION SYSTEM
Pky	PARKWAY
REP	WIRELESS REPEATER
VSN	VEHICLE SENSOR NODE

LOCATIONS OF CONSTRUCTION

LC-1

REVISED BY | DATE REVISED
WILLARD TULLOCK | JOHN BULLARD
CALCULATED-DESIGNED BY | CHECKED BY
FUNCTIONAL SUPERVISOR | DOUGLAS LAMBERT
STATE OF CALIFORNIA - DEPARTMENT OF TRANSPORTATION
Caltrans 06-DESIGN

LAST REVISION 03-12-09 | DATE PLOTTED => 20-JAN-2010 | TIME PLOTTED => 05:46

Dist	COUNTY	ROUTE	POST MILES TOTAL PROJECT	SHEET No.	TOTAL SHEETS
05	Mon	1	72.4/R101.6	3	51

REGISTERED CIVIL ENGINEER 03-16-09 DATE

5-4-09
PLANS APPROVAL DATE

REGISTERED PROFESSIONAL ENGINEER WILLARD D. TULLOCK II No. 29778 Exp. 3-31-11 CIVIL STATE OF CALIFORNIA

THE STATE OF CALIFORNIA OR ITS OFFICERS OR AGENTS SHALL NOT BE RESPONSIBLE FOR THE ACCURACY OR COMPLETENESS OF SCANNED COPIES OF THIS PLAN SHEET.

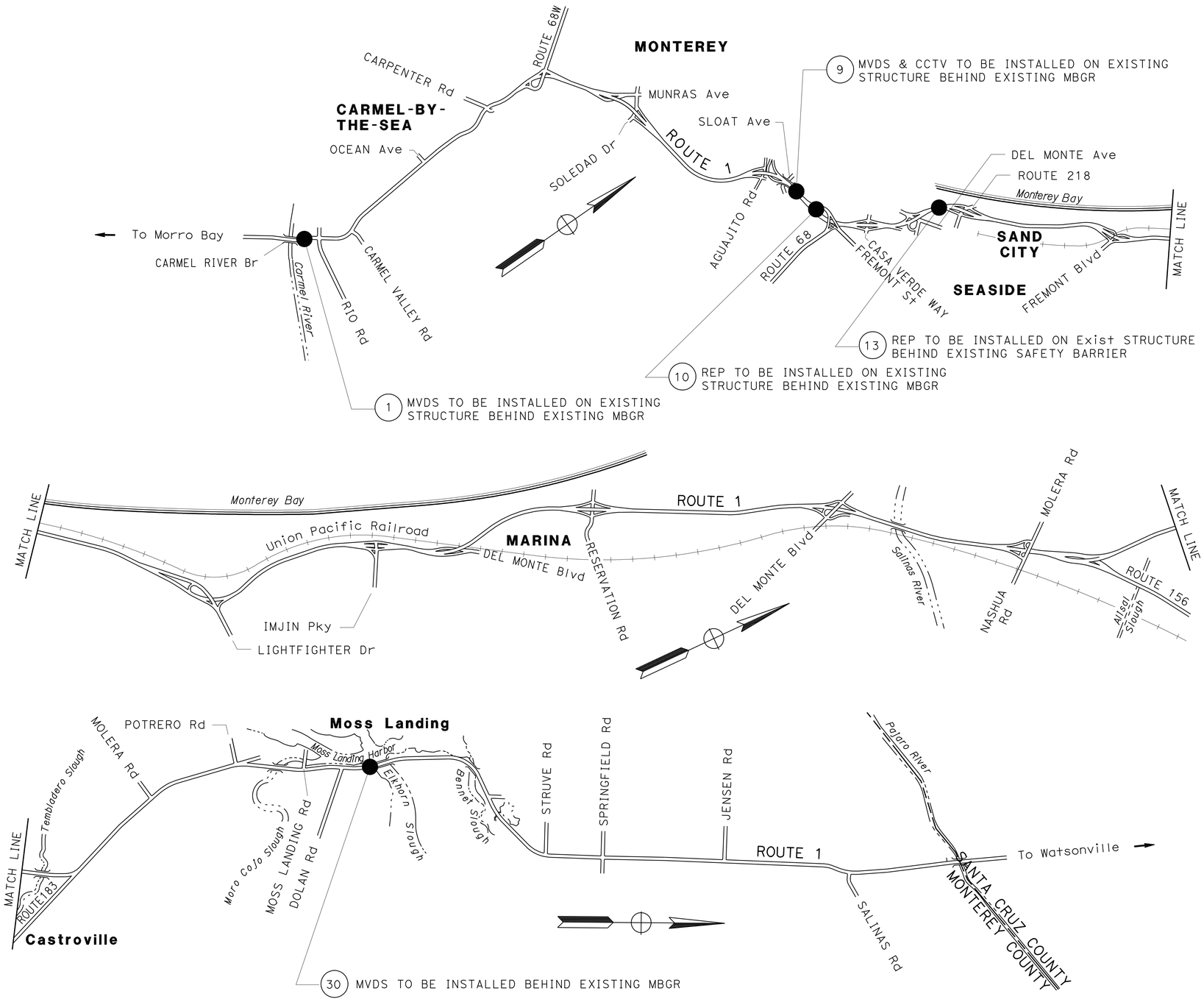

CONSTRUCTION DETAILS

NO SCALE

C-1

STATE OF CALIFORNIA - DEPARTMENT OF TRANSPORTATION
Caltrans
06-DESIGN

FUNCTIONAL SUPERVISOR: DOUGLAS LAMBERT
CALCULATED-DESIGNED BY: WILLARD TULLOCK
CHECKED BY: JOHN BULLARD
REVISED BY
DATE REVISED

LAST REVISION 03-12-09
DATE PLOTTED => 20-JAN-2010
TIME PLOTTED => 05:47

Dist	COUNTY	ROUTE	POST MILES TOTAL PROJECT	SHEET No.	TOTAL SHEETS
05	Mon	1	72.4/R101.6	4	51

REGISTERED CIVIL ENGINEER 03-16-09 DATE

5-4-09
PLANS APPROVAL DATE

REGISTERED PROFESSIONAL ENGINEER WILLARD D. TULLOCK II No. 29778 Exp. 3-31-11 CIVIL STATE OF CALIFORNIA

THE STATE OF CALIFORNIA OR ITS OFFICERS OR AGENTS SHALL NOT BE RESPONSIBLE FOR THE ACCURACY OR COMPLETENESS OF SCANNED COPIES OF THIS PLAN SHEET.

LEGEND

● WORK LOCATIONS (SEE TITLE SHEET AND LOCATIONS OF CONSTRUCTION SHEETS)

NOTES:
1. LOCATIONS OF CONSTRUCTION AREA SIGNS SHOWN ARE APPROXIMATE. EXACT LOCATIONS WILL BE DETERMINED BY THE ENGINEER.
2. SEE SHEET CS-2 FOR ADDITIONAL SIGNS REQUIRED.

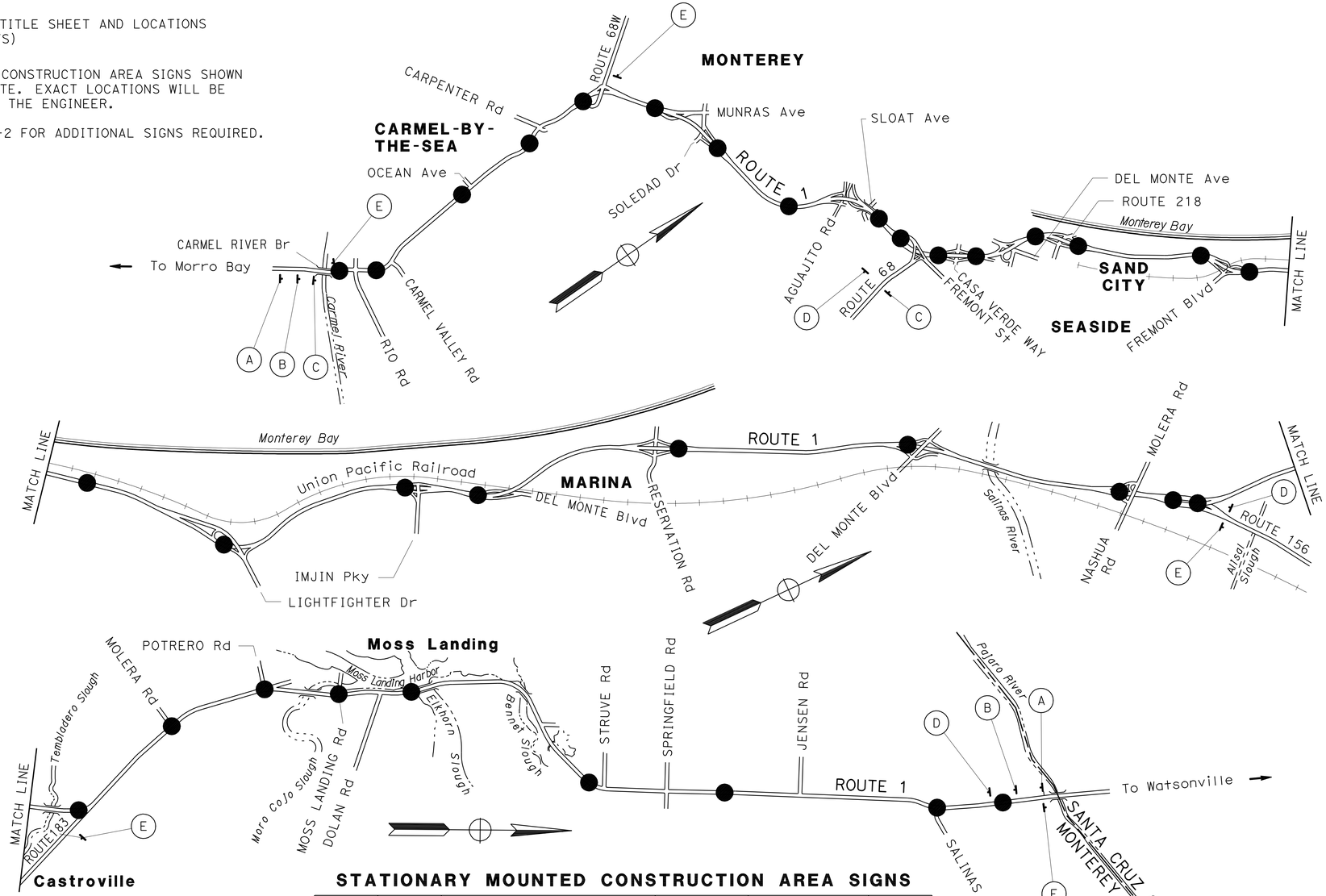

STATIONARY MOUNTED CONSTRUCTION AREA SIGNS

SIGN No.	SIGN CODE	SIGN MESSAGE	PANEL SIZE	No. OF POSTS AND SIZE	No. OF SIGNS (EA)
A	G20-1	ROAD WORK NEXT 29 MILES	36" x 18"	1 - 4" x 4"	2
B	TYPE-2	HIGHWAY IMPROVEMENT STATE HIGHWAY FUNDS CORRIDOR MOBILITY IMPROVEMENT	7' x 11'	2 - 6" x 8"	2
C	W20-1	ROAD WORK AHEAD	36" x 36"	1 - 4" x 6"	1
D	W20-1	ROAD WORK AHEAD	48" x 48"	1 - 4" x 6"	3
E	G20-2	END ROAD WORK	36" x 18"	1 - 4" x 4"	5

THIS PLAN ACCURATE FOR CONSTRUCTION AREA SIGN WORK ONLY.

CONSTRUCTION AREA SIGNS

NO SCALE

CS-1

STATE OF CALIFORNIA - DEPARTMENT OF TRANSPORTATION
Caltrans
06-DESIGN

FUNCTIONAL SUPERVISOR: DOUGLAS LAMBERT
CALCULATED-DESIGNED BY: WILLARD TULLOCK
CHECKED BY: JOHN BULLARD
REVISED BY
DATE REVISED

LAST REVISION 03-03-09
DATE PLOTTED => 20-JAN-2010
TIME PLOTTED => 05:47

Dist	COUNTY	ROUTE	POST MILES TOTAL PROJECT	SHEET No.	TOTAL SHEETS
05	Mon	1	72.4/R101.6	5	51

REGISTERED CIVIL ENGINEER 03-16-09 DATE

5-4-09
PLANS APPROVAL DATE

REGISTERED PROFESSIONAL ENGINEER XAVIER IVANHOE ALFARO No. 17488 Exp. 6/30/09 CIVIL STATE OF CALIFORNIA

THE STATE OF CALIFORNIA OR ITS OFFICERS OR AGENTS SHALL NOT BE RESPONSIBLE FOR THE ACCURACY OR COMPLETENESS OF SCANNED COPIES OF THIS PLAN SHEET.

LOCATIONS OF ADDITIONAL STATIONARY MOUNTED ''ROAD WORK AHEAD'' (W20-1) SIGNS

INTERSECTION/RAMP	ENTERS FROM:	PM	LATITUDE & LONGITUDE	PANEL SIZE	No. & POST SIZE	Qty
OLIVER Rd	LEFT	72.400	36°32′13.15"N 121°54′42.24"W	36" x 36"	1 - 4" x 6"	1
RIO Rd	LEFT & RIGHT	72.614	36°32′21.98"N 121°54′36.60"W	36" x 36"	1 - 4" x 6"	2
CARMEL VALLEY Rd	RIGHT	72.921	36°32′36.10"N 121°54′29.76"W	36" x 36"	1 - 4" x 6"	1
ATHERTON Dr	LEFT	73.140	36°32′46.88"N 121°54′34.48"W	36" x 36"	1 - 4" x 6"	1
SOUTH CARMEL HILLS Dr	LEFT & RIGHT	73.280	36°32′54.42"N 121°54′35.86"W	36" x 36"	1 - 4" x 6"	2
NORTH MESA Dr	LEFT	73.540	36°33′07.51"N 121°54′38.03"W	36" x 36"	1 - 4" x 6"	1
MORSE Dr	RIGHT	73.590	36°33′10.04"N 121°54′38.33"W	36" x 36"	1 - 4" x 6"	1
OCEAN Ave	LEFT & RIGHT	73.800	36°33′21.42"N 121°54′40.13"W	36" x 36"	1 - 4" x 6"	2
FLANDERS Dr	RIGHT	73.900	36°33′27.73"N 121°54′41.23"W	36" x 36"	1 - 4" x 6"	1
3rd Ave	LEFT	74.060	36°33′34.37"N 121°54′42.17"W	36" x 36"	1 - 4" x 6"	1
VALLEY Way	LEFT	74.070	36°33′35.21"N 121°54′42.30"W	36" x 36"	1 - 4" x 6"	1
HANDLEY Dr	LEFT	74.470	36°33′54.84"N 121°54′44.51"W	36" x 36"	1 - 4" x 6"	1
CARPENTER Rd	LEFT & RIGHT	74.560	36°33′59.24"N 121°54′46.54"W	36" x 36"	1 - 4" x 6"	2
SOUTH SAN LUIS Ave	LEFT	74.600	36°34′01.51"N 121°54′46.63"W	36" x 36"	1 - 4" x 6"	1
NORTH SAN LUIS Ave	LEFT	74.680	36°34′05.45"N 121°54′45.81"W	36" x 36"	1 - 4" x 6"	1
Rte 68 NORTHBOUND CONNECTOR	RIGHT (NORTHBOUND)	75.010	36°34′23.30"N 121°54′46.01"W	36" x 36"	1 - 4" x 6"	1
Rte 68 SOUTHBOUND CONNECTOR	RIGHT (SOUTHBOUND)	75.034	36°34′23.30"N 121°54′47.29"W	36" x 36"	1 - 4" x 6"	1
MUNRAS Ave SOUTHBOUND ON-RAMP	RIGHT (SOUTHBOUND)	R75.640	36°34′43.95"N 121°54′23.48"W	36" x 36"	1 - 4" x 6"	1
SOLEDAD Dr NORTHBOUND ON-RAMP	RIGHT (NORTHBOUND)	R76.180	36°34′56.13"N 121°53′46.51"W	36" x 36"	1 - 4" x 6"	1
AQUAJITO Rd SOUTHBOUND ON-RAMP	RIGHT (SOUTHBOUND)	R77.240	36°35′21.63"N 121°52′55.03"W	36" x 36"	1 - 4" x 6"	1
FREMONT St NORTHBOUND ON-RAMP	RIGHT (NORTHBOUND)	R77.580	36°35′36.00"N 121°52′34.17"W	36" x 36"	1 - 4" x 6"	1
Rte 68 WESTBOUND CONNECTOR	RIGHT (SOUTHBOUND)	R77.890	36°35′38.02"N 121°52′26.97"W	36" x 36"	1 - 4" x 6"	1
Rte 68 EASTBOUND CONNECTOR	RIGHT (NORTHBOUND)	R78.255	36°35′47.40"N 121°51′58.88"W	36" x 36"	1 - 4" x 6"	1
CASA VERDE Way SOUTHBOUND ON-RAMP	RIGHT (SOUTHBOUND)	R78.400	36°35′51.00"N 121°51′57.42"W	36" x 36"	1 - 4" x 6"	1
CASA VERDE Way NORTHBOUND ON-RAMP	RIGHT (NORTHBOUND)	R78.590	36°36′02.09"N 121°51′46.05"W	36" x 36"	1 - 4" x 6"	1
HANNON Ave (DEL MONTE Ave) SB ON-RAMP	RIGHT (SOUTHBOUND)	R78.760	36°36′07.13"N 121°51′43.58"W	36" x 36"	1 - 4" x 6"	1
ENGLISH Ave (DEL MONTE Ave) NB ON-RAMP	RIGHT (NORTHBOUND)	R78.870	36°36′15.51"N 121°51′39.29"W	36" x 36"	1 - 4" x 6"	1
Rte 218 SOUTHBOUND ON-RAMP	RIGHT (SOUTHBOUND)	R79.260	36°36′32.73"N 121°51′35.34"W	36" x 36"	1 - 4" x 6"	1
Rte 218 NORTHBOUND ON-RAMP	RIGHT (NORTHBOUND)	R79.518	36°36′41.70"N 121°51′18.97"W	36" x 36"	1 - 4" x 6"	1
FREMONT Blvd SOUTHBOUND ON-RAMP	RIGHT (SOUTHBOUND)	R80.620	36°37′23.96"N 121°50′39.73"W	36" x 36"	1 - 4" x 6"	1
FREMONT Blvd NORTHBOUND ON-RAMP	RIGHT (NORTHBOUND)	R80.870	36°37′32.80"N 121°50′21.91"W	36" x 36"	1 - 4" x 6"	1
LIGHTFIGHTER Dr SOUTHBOUND ON-RAMP	RIGHT (SOUTHBOUND)	R82.452	36°38′37.08"N 121°49′21.68"W	36" x 36"	1 - 4" x 6"	1
LIGHTFIGHTER Dr NORTHBOUND ON-RAMP	RIGHT (NORTHBOUND)	R83.046	36°39′01.80"N 121°48′52.55"W	36" x 36"	1 - 4" x 6"	1
IMJIN Pky SOUTHBOUND ON-RAMP	RIGHT (SOUTHBOUND)	R84.331	36°40′03.74"N 121°48′38.38"W	36" x 36"	1 - 4" x 6"	1
IMJIN Pky NORTHBOUND ON-RAMP	RIGHT (NORTHBOUND)	R84.637	36°40′21.15"N 121°48′39.30"W	36" x 36"	1 - 4" x 6"	1
DEL MONTE Blvd SOUTHBOUND ON-RAMP	RIGHT (SOUTHBOUND)	R84.969	36°40′27.47"N 121°48′35.55"W	36" x 36"	1 - 4" x 6"	1
RESERVATION Rd SOUTHBOUND ON-RAMP	RIGHT (SOUTHBOUND)	R86.320	36°41′40.15"N 121°48′23.73"W	36" x 36"	1 - 4" x 6"	1
RESERVATION Rd NORTHBOUND ON-RAMP	RIGHT (NORTHBOUND)	R86.661	36°42′00.00"N 121°48′09.82"W	36" x 36"	1 - 4" x 6"	1
DEL MONTE Blvd SOUTHBOUND ON-RAMP	RIGHT (SOUTHBOUND)	R88.513	36°43′22.75"N 121°47′28.75"W	36" x 36"	1 - 4" x 6"	1
DEL MONTE Blvd NORTHBOUND ON-RAMP	RIGHT (NORTHBOUND)	R88.562	36°43′31.17"N 121°47′20.92"W	36" x 36"	1 - 4" x 6"	1
NASHUA Rd/MOLERA Rd SOUTHBOUND ON-RAMP	RIGHT (SOUTHBOUND)	R90.186	36°44′33.35"N 121°46′26.50"W	36" x 36"	1 - 4" x 6"	1
NASHUA Rd/MOLERA Rd NORTHBOUND ON-RAMP	RIGHT (NORTHBOUND)	R90.336	36°44′45.45"N 121°46′15.04"W	36" x 36"	1 - 4" x 6"	1
Rte 156 WESTBOUND CONNECTOR	RIGHT (SOUTHBOUND)	R90.865	36°45′03.81"N 121°46′03.19"W	36" x 36"	1 - 4" x 6"	1
Rte 183 (MERRITT St)	RIGHT	T92.213	36°46′14.63"N 121°45′53.63"W	36" x 36"	1 - 4" x 6"	1
MOLERA Rd	LEFT	94.400	36°46′49.37"N 121°46′40.37"W	36" x 36"	1 - 4" x 6"	1
POTRERO Rd	LEFT	95.190	36°47′27.48"N 121°47′01.74"W	36" x 36"	1 - 4" x 6"	1
SOUTH MOSS LANDING Rd	LEFT	95.190	36°47′27.85"N 121°47′01.56"W	36" x 36"	1 - 4" x 6"	1
NORTH MOSS LANDING Rd	LEFT	95.810	36°47′59.46"N 121°47′00.00"W	36" x 36"	1 - 4" x 6"	1
DOLAN Rd	RIGHT	96.101	36°48′09.29"N 121°47′01.20"W	36" x 36"	1 - 4" x 6"	1
JETTY Rd	LEFT	97.000	36°49′01.12"N 121°47′09.32"W	36" x 36"	1 - 4" x 6"	1
SOUTH STRUVE Rd	LEFT	97.600	36°49′24.44"N 121°46′47.91"W	36" x 36"	1 - 4" x 6"	1
NORTH STRUVE Rd	LEFT	98.350	36°49′51.40"N 121°46′15.52"W	36" x 36"	1 - 4" x 6"	1
SPRINGFIELD Rd	LEFT & RIGHT	98.850	36°50′17.52"N 121°46′15.60"W	36" x 36"	1 - 4" x 6"	2
JENSEN Rd	LEFT	99.920	36°51′13.83"N 121°46′15.87"W	36" x 36"	1 - 4" x 6"	1
SALINAS Rd	RIGHT	T101.040	36°52′11.00"N 121°46′11.05"W	36" x 36"	1 - 4" x 6"	1

NOTE: 1. THE LOCATIONS ARE APPROXIMATE. EXACT LOCATIONS WILL BE DETERMINED BY THE ENGINEER.

CONSTRUCTION AREA SIGNS

CS-2

STATE OF CALIFORNIA - DEPARTMENT OF TRANSPORTATION
Caltrans
06-DESIGN

FUNCTIONAL SUPERVISOR: DOUGLAS LAMBERT
CALCULATED-DESIGNED BY: WILLARD TULLOCK
CHECKED BY: JOHN BULLARD
REVISED BY
DATE REVISED

LAST REVISION 03-12-09
DATE PLOTTED => 20-JAN-2010
TIME PLOTTED => 05:47

Dist	COUNTY	ROUTE	POST MILES TOTAL PROJECT	SHEET No.	TOTAL SHEETS
05	Mon	1	72.4/R101.6	6	51

REGISTERED ELECTRICAL ENGINEER 03-16-09 DATE

5-4-09
PLANS APPROVAL DATE

REGISTERED PROFESSIONAL ENGINEER XAVIER IVANHOE ALFARO No. 17488 Exp. 6/30/09 ELECTRICAL STATE OF CALIFORNIA

THE STATE OF CALIFORNIA OR ITS OFFICERS OR AGENTS SHALL NOT BE RESPONSIBLE FOR THE ACCURACY OR COMPLETENESS OF SCANNED COPIES OF THIS PLAN SHEET.

NOTES: (SHEET E-2 TO E-21)

2 MVDS SENSOR, NEMA 4 ENCLOSURE, ON Exist TYPE 9B CANTILEVER FLASHING BEACON, SEE SHEET E-22 FOR DETAILS.

3 MVDS SENSOR, CCTV CAMERA, NEMA 4 ENCLOSURE, ON Exist CANTILEVER SIGN, SEE SHEET E-23, E-28, AND E-35 FOR DETAILS.

4 MVDS SENSOR, NEMA 4 ENCLOSURE, AND PV PANELS ON VDS 30 POLE, SEE SHEET E-24 AND E-29 FOR DETAILS.

5 MVDS SENSOR, AP, NEMA 4 ENCLOSURE, AND PV PANELS ON VDS 30 POLE, SEE SHEET E-25, E-30 AND E-36 FOR DETAILS.

6 MVDS SENSOR, CCTV CAMERA, NEMA 4 ENCLOSURE, AND PV PANELS ON CCTV 30 POLE, SEE SHEET E-26, E-31, AND E-35 FOR DETAILS.

7 MVDS SENSOR, CCTV CAMERA, NEMA 4 ENCLOSURE, AND PV PANELS ON CCTV/VDS 40 POLE, SEE SHEET E-26, E-32, AND E-35 FOR DETAILS.

8 MVDS SENSOR, CCTV CAMERA, AP, NEMA 4 ENCLOSURE, AND PV PANELS ON CCTV/VDS 30 POLE, SEE SHEET E-27, E-33, E-35 AND E-36 FOR DETAILS.

9 MVDS SENSOR, CCTV CAMERA, AP, NEMA 4 ENCLOSURE, AND PV PANELS ON CCTV/VDS 40 POLE, SEE SHEET E-27, E-34, E-35 AND E-36 FOR DETAILS.

10 WIRELESS REPEATER ON Exist ELECTROLIER, SEE SHEET E-36 FOR DETAILS.

11 VEHICLE SENSOR NODE. SEE SHEET E-37 FOR DETAILS.

12 120/240 V, SINGLE-PHASE, 3-WIRE, TYPE III-CF SERVICE EQUIPMENT ENCLOSURE WITH THE FOLLOWING CIRCUIT BREAKERS:

CTID No. 05440010077730L

AMPERES	VOLTS	POLES	LOAD	METER	PHOTOELECTRIC CONTROL TYPE
100	240	2	MAIN	YES	———
30	240	2	LIGHTING	YES	V
15	120	1	LIGHTING CONTROL	YES	———
15	120	1	SIGN LIGHTING	YES	———
15	120	1	SPARE	YES	———

CTID No. 05440010077730T

AMPERES	VOLTS	POLES	LOAD	METER	PHOTOELECTRIC CONTROL TYPE
100	240	2	MAIN	YES	———
20	120	1	MVDS	YES	———
20	120	1	CCTV	YES	———
15	120	1	SPARE	YES	———

ABBREVIATIONS:

CTID - CALTRANS IDENTIFICATION
MVDS - MICROWAVE VEHICLE DETECTION SYSTEM
WVDS - WIRELESS VEHICLE DETECTION SYSTEM
PG&E - PACIFIC GAS AND ELECTRIC COMPANY
PV - PHOTOVOLTAIC
OCC - OUTDOOR CAT5E CABLE
RJ - REGISTERED JACK
RS-232 - STANDARD FOR SERIAL COMMUNICATIONS
AP - ACCESS POINT
RP - WIRELESS REPEATER
VSN - VEHICLE SENSOR NODE
VDS - VEHICLE DETECTION SYSTEM
WCL - WIRELESS COMMUNICATION LINK

LEGEND:

◇ VEHICLE SENSOR NODE

R WIRELESS REPEATER

A ACCESS POINT

THIS PLAN IS ACCURATE FOR ELECTRICAL WORK ONLY.

WIRELESS VEHICLE DETECTION SYSTEM
MICROWAVE VEHICLE DETECTION SYSTEM
CLOSED CIRCUIT TELEVISION SYSTEM

E-1

STATE OF CALIFORNIA - DEPARTMENT OF TRANSPORTATION
Caltrans ELECTRICAL DESIGN

FUNCTIONAL SUPERVISOR: ALI BAKHDOUD
CALCULATED-DESIGNED BY: ANHHUY NGUYEN
CHECKED BY: XAVIER ALFARO
REVISED BY
DATE REVISED

LAST REVISION 03-11-09 DATE PLOTTED => 20-JAN-2010 TIME PLOTTED => 05:47

Dist	COUNTY	ROUTE	POST MILES TOTAL PROJECT	SHEET No.	TOTAL SHEETS
05	Mon	1	72.4/R101.6	7	51

REGISTERED ELECTRICAL ENGINEER 03-16-09 DATE

5-4-09
PLANS APPROVAL DATE

REGISTERED PROFESSIONAL ENGINEER XAVIER IVANHOE ALFARO No. 17488 Exp. 6/30/09 ELECTRICAL STATE OF CALIFORNIA

THE STATE OF CALIFORNIA OR ITS OFFICERS OR AGENTS SHALL NOT BE RESPONSIBLE FOR THE ACCURACY OR COMPLETENESS OF SCANNED COPIES OF THIS PLAN SHEET.

LOCATION NUMBER	LOCATION	APPROXIMATE POST MILE	SIDE OF FREEWAY	NUMBER OF LANES/DIRECTION	EQUIPMENT TYPE					MOUNTING LOCATION								NOTES
										Min SETBACK FROM ETW (FEET)	LATITUDE			LONGITUDE			EXISTING ELECTROLIER/SIGN/FB NUMBER	
					MVDS	CCTV	PV PANELS	ACCESS POINT	REPEATER		DEGREES	MINUTES	SECONDS	DEGREES	MINUTES	SECONDS		
1	SOUTH OF OLIVER Rd	72.40	NB	1N1S	1												A7230	2
2	SOUTH OF CARMEL VALLEY Rd	72.76	NB	1N1S	1		2			20′	36	32	28.00	-121	54	30.97		4 *
3	SOUTH OF OCEAN Ave	73.71	NB	2N1S	1		2			20′	36	33	16.42	-121	54	38.72		4 *
4	SOUTH OF CARPENTER Rd	74.40	NB	2N2S	1													2
5	NORTH OF CARPENTER Rd	74.92	NB	1N					1								K7492	10
		75.00	SB	2N3S	1	1	4	1		30′	36	34	22.57	-121	54	47.73		9
6	SOUTH OF MUNRAS Ave	R75.58	SB	3N3S	1		2			30′	36	34	43.68	-121	54	20.73		4 *
7	NORTH OF SOLEDAD Dr	R76.21	SB	3N3S	1	1	4			30′	36	34	58.06	-121	53	45.12		7 *
8	SOUTH OF AQUAJITO Rd	R76.94	NB	2N2S	1		2			30′	36	35	7.5	-121	53	1.5		4 *
9	NORTH OF SLOAT Ave	R77.63	SB	4N4S	1	1											LL7764	3
10	SOUTH OF ROUTE 68 Sep	R77.88	SB	2S					1								7788	10
		R78.01	NB	5N3S	1	1	4	1		4′ Min FROM Exist MBGR	36	35	39.61	-121	52	12.06		9 POLE PROTECTED BY Exist MBGR
11	NORTH OF FREMONT St	R78.29	NB	1N					1								V7829	10
		R78.33	SB	3N3S	1		2	1		30′	36	35	51.91	-121	51	57.26		5
12	NORTH OF CASA VERDE Way	R78.51	SB	3N3S	1		2	1		30′	36	35	58.24	-121	51	50.44		5
		R78.75	NB	1N1S					1								X7867	10
13	NORTH OF DEL MONTE Ave	R78.97	NB	1N					1								77892	10
		R79.02	SB	3N3S	1	1	4	1		30′	36	36	23.12	-121	51	40.85		8
		R79.16	SB	1S					1								AA7915	10
		R79.20	NB	1N					1								BB792C	10
14	NORTH OF CANYON DEL REY Blvd	R79.47	NB	3N3S	1		2			30′	36	36	40.69	-121	51	19.75		4 *
15	SOUTH OF FREMONT Blvd	R80.45	NB	3N2S	1		2	1		4′ Min FROM Exist MBGR	36	37	20.35	-121	50	42.36		5 POLE PROTECTED BY Exist MBGR
		R80.48	SB	1S					1								EE8048	10
16	NORTH OF FREMONT Blvd	R80.86	NB	3N4S	1		2			30′	36	37	32.18	-121	50	21.97		4 *

* LOCATION NOT SHOWN ON PLANS

WIRELESS VEHICLE DETECTION SYSTEM
MICROWAVE VEHICLE DETECTION SYSTEM
CLOSED CIRCUIT TELEVISION SYSTEM

THIS PLAN IS ACCURATE FOR ELECTRICAL WORK ONLY.

E-2

REVISED BY | DATE REVISED
ANHHUY NGUYEN | XAVIER ALFARO
CALCULATED-DESIGNED BY | CHECKED BY
FUNCTIONAL SUPERVISOR: ALI BAKHDOUD
STATE OF CALIFORNIA - DEPARTMENT OF TRANSPORTATION
Caltrans® ELECTRICAL DESIGN

LAST REVISION 03-10-09 | DATE PLOTTED => 20-JAN-2010 | TIME PLOTTED => 05:47

Dist	COUNTY	ROUTE	POST MILES TOTAL PROJECT	SHEET No.	TOTAL SHEETS
05	Mon	1	72.4/R101.6	8	51

REGISTERED ELECTRICAL ENGINEER 03-16-09 DATE

5-4-09
PLANS APPROVAL DATE

REGISTERED PROFESSIONAL ENGINEER XAVIER IVANHOE ALFARO No. 17488 Exp. 6/30/09 ELECTRICAL STATE OF CALIFORNIA

THE STATE OF CALIFORNIA OR ITS OFFICERS OR AGENTS SHALL NOT BE RESPONSIBLE FOR THE ACCURACY OR COMPLETENESS OF SCANNED COPIES OF THIS PLAN SHEET.

LOCATION NUMBER	APPROXIMATE LOCATION	APPROXIMATE POST MILE	SIDE OF FREEWAY	NUMBER OF LANES/DIRECTION	EQUIPMENT TYPE					MOUNTING LOCATION								NOTES
										Min SETBACK FROM ETW (FEET)	LATITUDE			LONGITUDE			EXISTING ELECTROLIER/SIGN/FB NUMBER	
					MVDS	CCTV	PV PANELS	ACCESS POINT	REPEATER		DEGREES	MINUTES	SECONDS	DEGREES	MINUTES	SECONDS		
17	NORTH OF FREMONT Blvd	R81.56	NB	3N3S	1		2			30′	36	37	53.95	-121	50	4.85		* 4
18	SOUTH OF LIGHTFIGHTER Dr	R82.79	NB	4N4S	1		2			30′	36	38	44.74	-121	48	59.30		* 4
19	SOUTH OF IMJIN Pky	R84.33	NB	4N4S	1		2			30′	36	40	2.16	-121	48	49.61		* 4
20	SOUTH OF DEL MONTE Blvd	R84.97	NB	4N3S	1		2			30′	36	40	31.59	-121	48	29.69		* 4
21	NORTH OF RESERVATION Rd	R86.69	NB	3N3S	1		2			30′	36	41	57.33	-121	48	10.72		* 4
22	SOUTH OF DEL MONTE Blvd	R88.35	SB	1S					1								D8835	10
		R88.36	NB	1N					1								D8836	10
		R88.58	NB	3N2S	1		2	1		30′	36	43	27.14	-121	47	23.56		5
		R88.66	SB	1S					1								E8866	10
23	SOUTH OF MOLERA NASHUA Rd	R90.17	NB	1N					1								H9017	10
		90.37	NB	3N4S	1		2	1		30′	36	44	43.35	-121	46	16.17		* 5
24	SOUTH OF ROUTE 156 Sep	90.74	NB	2N2S	1		2			30′	36	44	58.65	-121	46	3.43		* 4
25	ROUTE 156 Sep	90.98	SB	2N2S	1	1	4			30′	36	45	9.61	-121	45	57.26		* 6
26	SOUTH OF ROUTE 183 Jct	92.10	NB	2N1S	1	1	4	1		30′	36	46	10.45	-121	45	53.78		8
		92.21	NB	1N1S					1								K9221	10
27	MOLERA Rd	94.39	NB	3N2S	1		2	1		20′	36	46	49.30	-121	46	39.13		5
28	POTERO Rd	95.19	NB	3N2S	1		2	1		20′	36	47	27.04	-121	47	0.25		5
29	MOSS LANDING Rd	95.83	SB	3N3S	1	1	4	1		20′	36	48	0.58	-121	46	59.70		8
30	SOUTH OF ELKHORN SLOUGH BRIDGE	96.42	NB	1N1S	1		2			4′ Min FROM Exist MBGR	36	48	31.26	-121	47	2.70		* 4 POLE PROTECTED BY Exist MBGR
31	SOUTH OF STRUVE Rd	98.20	SB	1N1S	1		2			20′	36	49	44.74	-121	46	19.52		* 4
32	SOUTH OF JENSEN Rd	99.30	SB	1N1S	1		2			20′	36	50	43.67	-121	46	16.52		* 4
33	SALINAS Rd	T101.02	SB	3N3S	1	1	4	1		20′	36	52	10.68	-121	46	12.90		8
34	SOUTH OF PAJARO RIVER BRIDGE	R101.58	NB	2N2S	1		2			30′	36	52	39.27	-121	46	15.54		* 4

* LOCATION NOT SHOWN ON PLANS

WIRELESS VEHICLE DETECTION SYSTEM
MICROWAVE VEHICLE DETECTION SYSTEM
CLOSED CIRCUIT TELEVISION SYSTEM

E-3

THIS PLAN IS ACCURATE FOR ELECTRICAL WORK ONLY.

REVISED BY | DATE REVISED
ANHHUY NGUYEN | XAVIER ALFARO
CALCULATED-DESIGNED BY | CHECKED BY
FUNCTIONAL SUPERVISOR: ALI BAKHDOUD

STATE OF CALIFORNIA - DEPARTMENT OF TRANSPORTATION
Caltrans® ELECTRICAL DESIGN

LAST REVISION 03-10-09 | DATE PLOTTED => 20-JAN-2010 | TIME PLOTTED => 05:48

Dist	COUNTY	ROUTE	POST MILES TOTAL PROJECT	SHEET No.	TOTAL SHEETS
05	Mon	1	72.4/R101.6	9	51

REGISTERED ELECTRICAL ENGINEER 03-16-09 DATE

5-4-09
PLANS APPROVAL DATE

REGISTERED PROFESSIONAL ENGINEER
XAVIER IVANHOE ALFARO
No. 17488
Exp. 6/30/09
ELECTRICAL
STATE OF CALIFORNIA

THE STATE OF CALIFORNIA OR ITS OFFICERS OR AGENTS SHALL NOT BE RESPONSIBLE FOR THE ACCURACY OR COMPLETENESS OF SCANNED COPIES OF THIS PLAN SHEET.

NOTES:
1. FOR COMPLETE RIGHT OF WAY AND ACCURATE ACCESS DATA, SEE RIGHT OF WAY RECORD MAPS AT DISTRICT OFFICE.
2. FOR ADDITIONAL NOTES AND LOCATIONS SEE SHEET E-1, E-2, AND E-3.
3. Exist TRAFFIC SIGNAL SYSTEM NOT SHOWN.

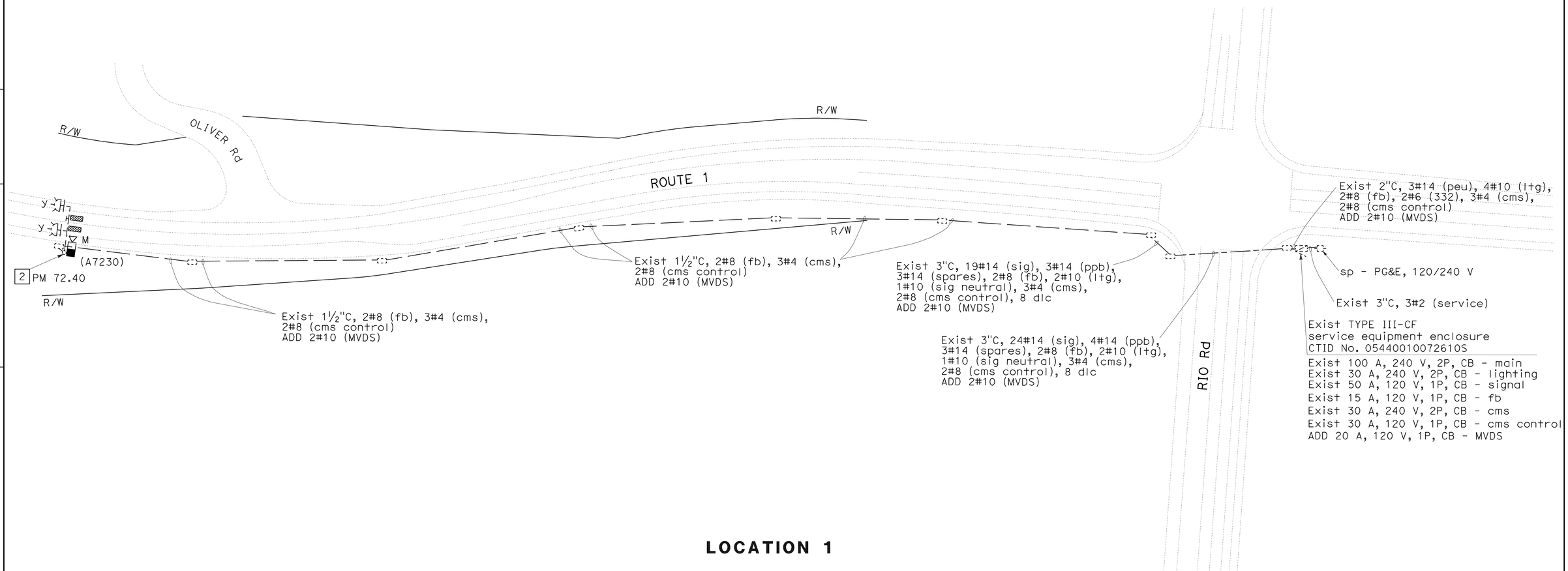

LOCATION 1

MICROWAVE VEHICLE DETECTION SYSTEM

SCALE: 1"=50'

E-4

THIS PLAN IS ACCURATE FOR ELECTRICAL WORK ONLY. EXISTING UTILITY FACILITIES HAVE NOT BEEN POSITIVELY IDENTIFIED.

REVISED BY	DATE REVISED

CALCULATED-DESIGNED BY: ANHHUY NGUYEN
CHECKED BY: XAVIER ALFARO

FUNCTIONAL SUPERVISOR: ALI BAKHDOUD

STATE OF CALIFORNIA - DEPARTMENT OF TRANSPORTATION
Caltrans® ELECTRICAL DESIGN

LAST REVISION DATE PLOTTED => 20-JAN-2010
03-09-09 TIME PLOTTED => 05:48

Dist	COUNTY	ROUTE	POST MILES TOTAL PROJECT	SHEET No.	TOTAL SHEETS
05	Mon	1	72.4/R101.6	10	51

REGISTERED ELECTRICAL ENGINEER 03-16-09 DATE

5-4-09
PLANS APPROVAL DATE

REGISTERED PROFESSIONAL ENGINEER XAVIER IVANHOE ALFARO No. 17488 Exp. 6/30/09 ELECTRICAL STATE OF CALIFORNIA

THE STATE OF CALIFORNIA OR ITS OFFICERS OR AGENTS SHALL NOT BE RESPONSIBLE FOR THE ACCURACY OR COMPLETENESS OF SCANNED COPIES OF THIS PLAN SHEET.

NOTES:

1. FOR COMPLETE RIGHT OF WAY AND ACCURATE ACCESS DATA, SEE RIGHT OF WAY RECORD MAPS AT DISTRICT OFFICE.
2. FOR ADDITIONAL NOTES AND LOCATIONS SEE SHEET E-1, E-2, AND E-3.
3. Exist TRAFFIC SIGNAL SYSTEM NOT SHOWN.

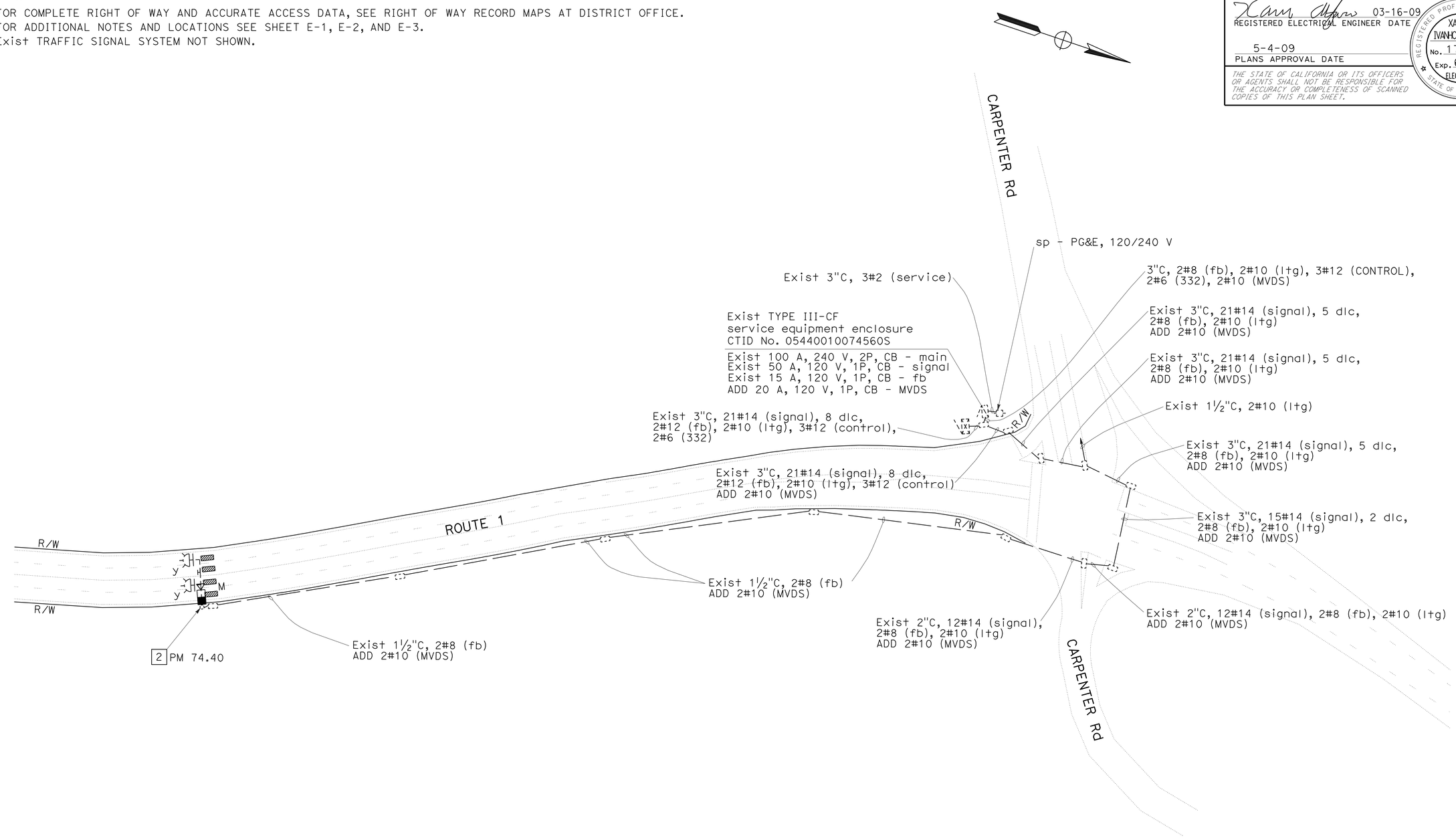

LOCATION 4

MICROWAVE VEHICLE DETECTION SYSTEM

SCALE: 1"-50'

E-5

THIS PLAN IS ACCURATE FOR ELECTRICAL WORK ONLY.

EXISTING UTILITY FACILITIES HAVE NOT BEEN POSITIVELY IDENTIFIED.

STATE OF CALIFORNIA - DEPARTMENT OF TRANSPORTATION
Caltrans® ELECTRICAL DESIGN

FUNCTIONAL SUPERVISOR: ALI BAKHDOUD

CALCULATED-DESIGNED BY: ANHHUY NGUYEN
CHECKED BY: XAVIER ALFARO

REVISED BY
DATE REVISED

LAST REVISION 03-09-09
DATE PLOTTED => 20-JAN-2010
TIME PLOTTED => 05:48

Dist	COUNTY	ROUTE	POST MILES TOTAL PROJECT	SHEET No.	TOTAL SHEETS
05	Mon	1	72.4/R101.6	11	51

REGISTERED ELECTRICAL ENGINEER 03-16-09 DATE

5-4-09
PLANS APPROVAL DATE

REGISTERED PROFESSIONAL ENGINEER
XAVIER IVANHOE ALFARO
No. 17488
Exp. 6/30/09
ELECTRICAL
STATE OF CALIFORNIA

THE STATE OF CALIFORNIA OR ITS OFFICERS OR AGENTS SHALL NOT BE RESPONSIBLE FOR THE ACCURACY OR COMPLETENESS OF SCANNED COPIES OF THIS PLAN SHEET.

NOTES:
1. FOR COMPLETE RIGHT OF WAY AND ACCURATE ACCESS DATA, SEE RIGHT OF WAY RECORD MAPS AT DISTRICT OFFICE.
2. FOR ADDITIONAL NOTES AND LOCATIONS SEE SHEET E-1, E-2, AND E-3.

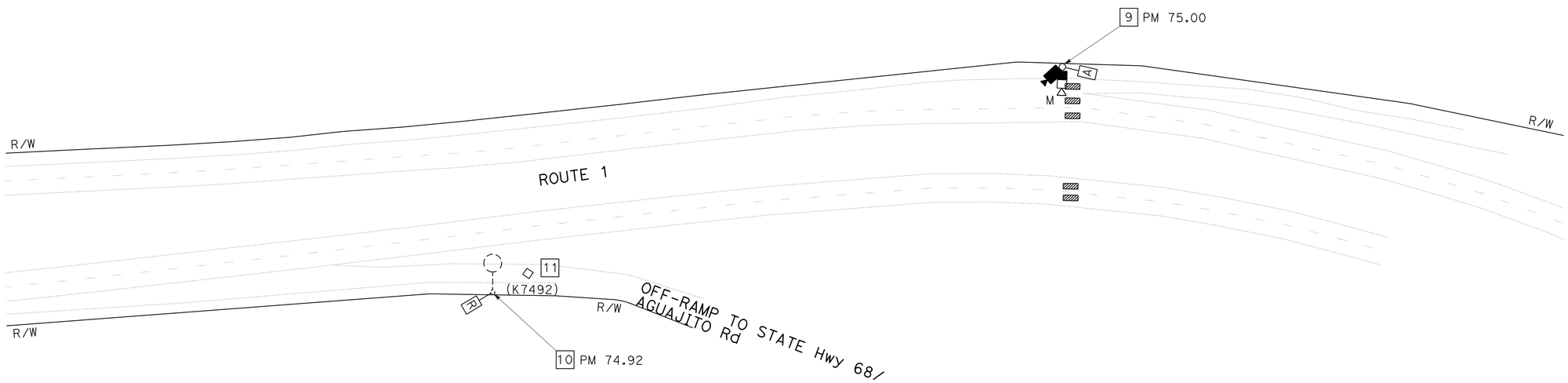

LOCATION 5

WIRELESS VEHICLE DETECTION SYSTEM
MICROWAVE VEHICLE DETECTION SYSTEM
CLOSED CIRCUIT TELEVISION SYSTEM

SCALE: 1"=50'

E-6

THIS PLAN IS ACCURATE FOR ELECTRICAL WORK ONLY.

EXISTING UTILITY FACILITIES HAVE NOT BEEN POSITIVELY IDENTIFIED.

STATE OF CALIFORNIA - DEPARTMENT OF TRANSPORTATION
Caltrans® ELECTRICAL DESIGN

FUNCTIONAL SUPERVISOR: ALI BAKHDOUD
CALCULATED-DESIGNED BY: ANHHUY NGUYEN
CHECKED BY: XAVIER ALFARO
REVISED BY
DATE REVISED

LAST REVISION 03-09-09
DATE PLOTTED => 20-JAN-2010
TIME PLOTTED => 05:48

Dist	COUNTY	ROUTE	POST MILES TOTAL PROJECT	SHEET No.	TOTAL SHEETS
05	Mon	1	72.4/R101.6	12	51

REGISTERED ELECTRICAL ENGINEER 03-16-09 DATE

5-4-09
PLANS APPROVAL DATE

REGISTERED PROFESSIONAL ENGINEER
XAVIER IVANHOE ALFARO
No. 17488
Exp. 6/30/09
ELECTRICAL
STATE OF CALIFORNIA

THE STATE OF CALIFORNIA OR ITS OFFICERS OR AGENTS SHALL NOT BE RESPONSIBLE FOR THE ACCURACY OR COMPLETENESS OF SCANNED COPIES OF THIS PLAN SHEET.

NOTES:

1. FOR COMPLETE RIGHT OF WAY AND ACCURATE ACCESS DATA, SEE RIGHT OF WAY RECORD MAPS AT DISTRICT OFFICE.
2. FOR ADDITIONAL NOTES AND LOCATIONS SEE SHEET E-1, E-2, AND E-3.

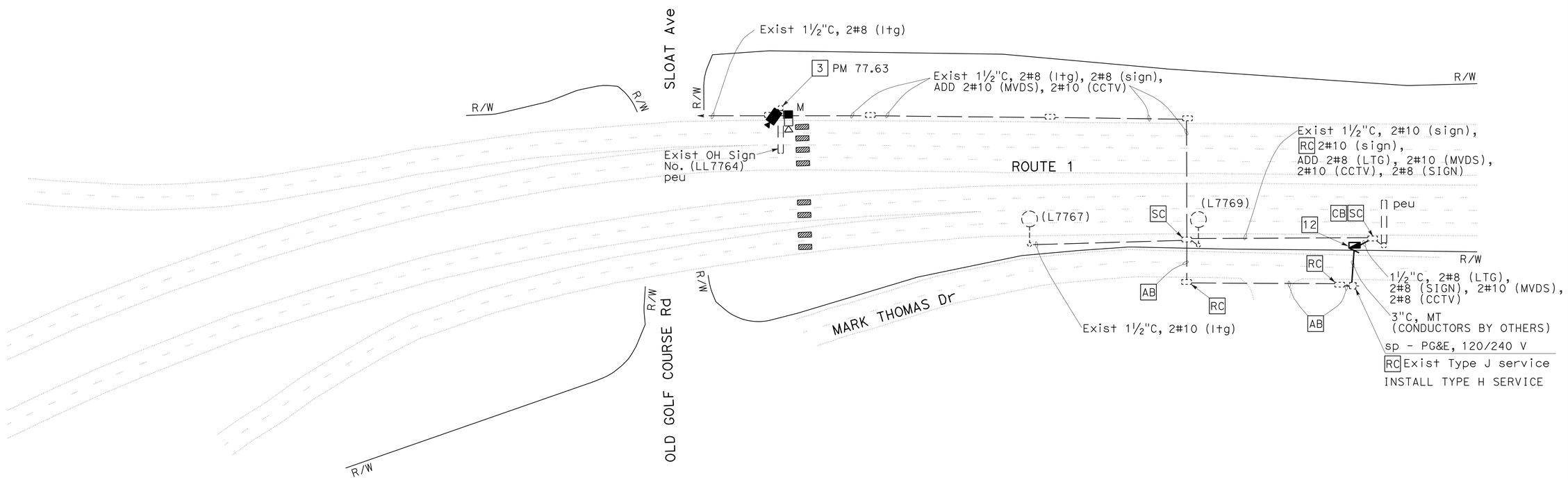

LOCATION 9

MICROWAVE VEHICLE DETECTION SYSTEM
CLOSED CIRCUIT TELEVISION SYSTEM

SCALE: 1"=50'

E-7

THIS PLAN IS ACCURATE FOR ELECTRICAL WORK ONLY.

EXISTING UTILITY FACILITIES HAVE NOT BEEN POSITIVELY IDENTIFIED.

STATE OF CALIFORNIA - DEPARTMENT OF TRANSPORTATION
Caltrans ELECTRICAL DESIGN

FUNCTIONAL SUPERVISOR: ALI BAKHDOUD
CALCULATED-DESIGNED BY: ANHHUY NGUYEN
CHECKED BY: XAVIER ALFARO
REVISED BY
DATE REVISED

LAST REVISION 03-09-09
DATE PLOTTED => 20-JAN-2010
TIME PLOTTED => 05:48

Dist	COUNTY	ROUTE	POST MILES TOTAL PROJECT	SHEET No.	TOTAL SHEETS
05	Mon	1	72.4/R101.6	13	51

REGISTERED ELECTRICAL ENGINEER 03-16-09 DATE

5-4-09
PLANS APPROVAL DATE

REGISTERED PROFESSIONAL ENGINEER
XAVIER IVANHOE ALFARO
No. 17488
Exp. 6/30/09
ELECTRICAL
STATE OF CALIFORNIA

THE STATE OF CALIFORNIA OR ITS OFFICERS OR AGENTS SHALL NOT BE RESPONSIBLE FOR THE ACCURACY OR COMPLETENESS OF SCANNED COPIES OF THIS PLAN SHEET.

NOTES:

1. FOR COMPLETE RIGHT OF WAY AND ACCURATE ACCESS DATA, SEE RIGHT OF WAY RECORD MAPS AT DISTRICT OFFICE.
2. FOR ADDITIONAL NOTES AND LOCATIONS SEE SHEET E-1, E-2, AND E-3.

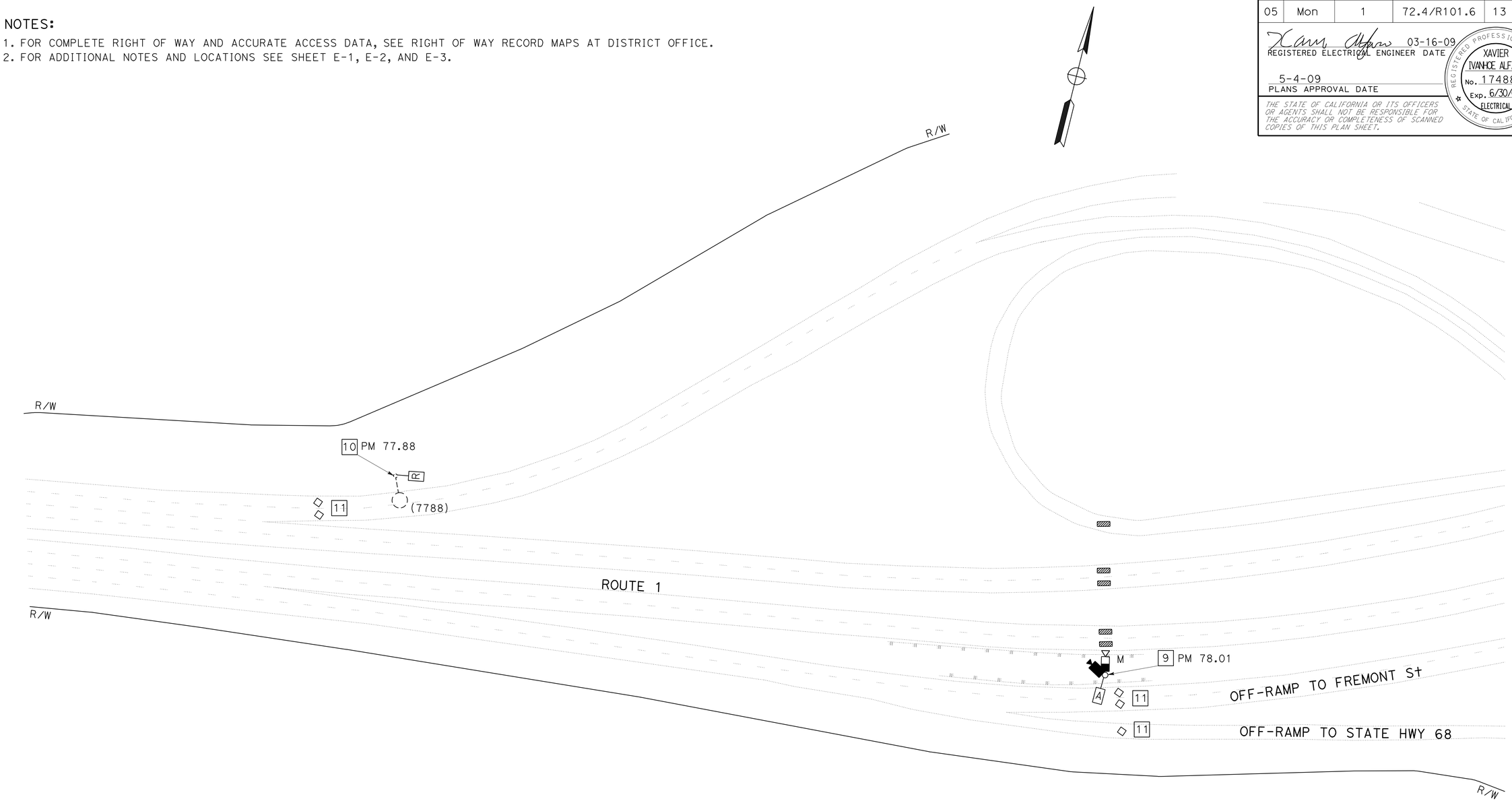

LOCATION 10

WIRELESS VEHICLE DETECTION SYSTEM
MICROWAVE VEHICLE DETECTION SYSTEM
CLOSED CIRCUIT TELEVISION SYSTEM

SCALE: 1"=50'

E-8

THIS PLAN IS ACCURATE FOR ELECTRICAL WORK ONLY.

EXISTING UTILITY FACILITIES HAVE NOT BEEN POSITIVELY IDENTIFIED.

STATE OF CALIFORNIA - DEPARTMENT OF TRANSPORTATION
Caltrans® ELECTRICAL DESIGN

FUNCTIONAL SUPERVISOR: ALI BAKHDOUD
CALCULATED-DESIGNED BY: ANHHUY NGUYEN
CHECKED BY: XAVIER ALFARO
REVISED BY
DATE REVISED

LAST REVISION 03-09-09
DATE PLOTTED => 20-JAN-2010
TIME PLOTTED => 05:49

Dist	COUNTY	ROUTE	POST MILES TOTAL PROJECT	SHEET No.	TOTAL SHEETS
05	Mon	1	72.4/R101.6	14	51

REGISTERED ELECTRICAL ENGINEER 03-16-09 DATE

5-4-09
PLANS APPROVAL DATE

REGISTERED PROFESSIONAL ENGINEER
XAVIER IVANHOE ALFARO
No. 17488
Exp. 6/30/09
ELECTRICAL
STATE OF CALIFORNIA

THE STATE OF CALIFORNIA OR ITS OFFICERS OR AGENTS SHALL NOT BE RESPONSIBLE FOR THE ACCURACY OR COMPLETENESS OF SCANNED COPIES OF THIS PLAN SHEET.

NOTES:

1. FOR COMPLETE RIGHT OF WAY AND ACCURATE ACCESS DATA, SEE RIGHT OF WAY RECORD MAPS AT DISTRICT OFFICE.
2. FOR ADDITIONAL NOTES AND LOCATIONS SEE SHEET E-1, E-2, AND E-3.

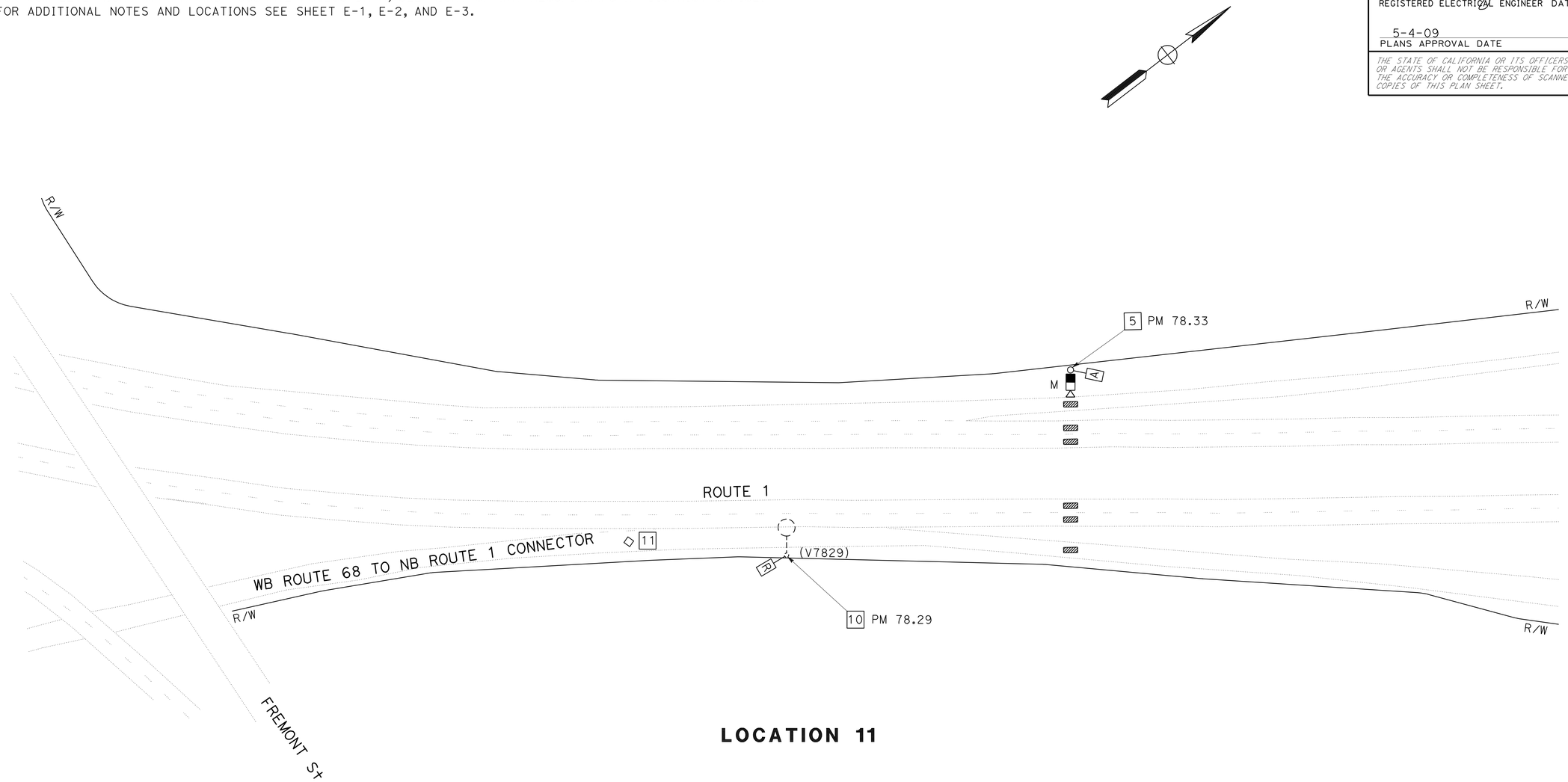

LOCATION 11

WIRELESS VEHICLE DETECTION SYSTEM
MICROWAVE VEHICLE DETECTION SYSTEM

SCALE: 1"=50'

E-9

THIS PLAN IS ACCURATE FOR ELECTRICAL WORK ONLY.

EXISTING UTILITY FACILITIES HAVE NOT BEEN POSITIVELY IDENTIFIED.

STATE OF CALIFORNIA - DEPARTMENT OF TRANSPORTATION
Caltrans® ELECTRICAL DESIGN

FUNCTIONAL SUPERVISOR: ALI BAKHDOUD
CALCULATED-DESIGNED BY: ANHHUY NGUYEN
CHECKED BY: XAVIER ALFARO
REVISED BY
DATE REVISED

LAST REVISION 03-03-09
DATE PLOTTED => 20-JAN-2010
TIME PLOTTED => 05:49

Dist	COUNTY	ROUTE	POST MILES TOTAL PROJECT	SHEET No.	TOTAL SHEETS
05	Mon	1	72.4/R101.6	15	51

REGISTERED ELECTRICAL ENGINEER 03-16-09 DATE

5-4-09
PLANS APPROVAL DATE

REGISTERED PROFESSIONAL ENGINEER
XAVIER IVANHOE ALFARO
No. 17488
Exp. 6/30/09
ELECTRICAL
STATE OF CALIFORNIA

THE STATE OF CALIFORNIA OR ITS OFFICERS OR AGENTS SHALL NOT BE RESPONSIBLE FOR THE ACCURACY OR COMPLETENESS OF SCANNED COPIES OF THIS PLAN SHEET.

NOTES:

1. FOR COMPLETE RIGHT OF WAY AND ACCURATE ACCESS DATA, SEE RIGHT OF WAY RECORD MAPS AT DISTRICT OFFICE.
2. FOR ADDITIONAL NOTES AND LOCATIONS SEE SHEET E-1, E-2, AND E-3.

LOCATION 12

WIRELESS VEHICLE DETECTION SYSTEM
MICROWAVE VEHICLE DETECTION SYSTEM

SCALE: 1"=50'

E-10

THIS PLAN IS ACCURATE FOR ELECTRICAL WORK ONLY.

EXISTING UTILITY FACILITIES HAVE NOT BEEN POSITIVELY IDENTIFIED.

STATE OF CALIFORNIA - DEPARTMENT OF TRANSPORTATION
Caltrans® ELECTRICAL DESIGN

FUNCTIONAL SUPERVISOR: ALI BAKHDOUD
CALCULATED-DESIGNED BY: ANHHUY NGUYEN
CHECKED BY: XAVIER ALFARO
REVISED BY
DATE REVISED

LAST REVISION 03-09-09
DATE PLOTTED => 20-JAN-2010
TIME PLOTTED => 05:49

Dist	COUNTY	ROUTE	POST MILES TOTAL PROJECT	SHEET No.	TOTAL SHEETS
05	Mon	1	72.4/R101.6	16	51

REGISTERED ELECTRICAL ENGINEER 03-16-09 DATE

5-4-09
PLANS APPROVAL DATE

REGISTERED PROFESSIONAL ENGINEER
XAVIER IVANHOE ALFARO
No. 17488
Exp. 6/30/09
ELECTRICAL
STATE OF CALIFORNIA

THE STATE OF CALIFORNIA OR ITS OFFICERS OR AGENTS SHALL NOT BE RESPONSIBLE FOR THE ACCURACY OR COMPLETENESS OF SCANNED COPIES OF THIS PLAN SHEET.

NOTES:

1. FOR COMPLETE RIGHT OF WAY AND ACCURATE ACCESS DATA, SEE RIGHT OF WAY RECORD MAPS AT DISTRICT OFFICE.
2. FOR ADDITIONAL NOTES AND LOCATIONS SEE SHEET E-1, E-2, AND E-3.

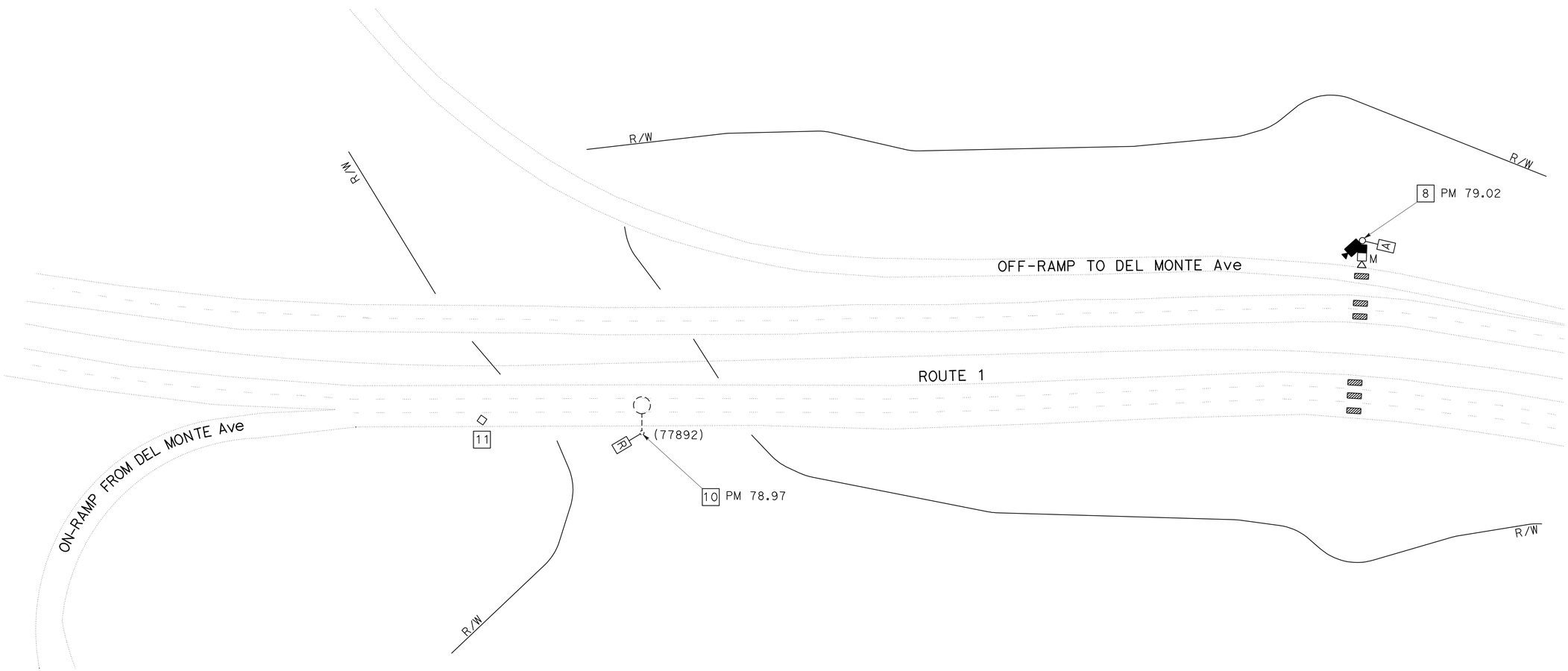

LOCATION 13

WIRELESS VEHICLE DETECTION SYSTEM
MICROWAVE VEHICLE DETECTION SYSTEM
CLOSED CIRCUIT TELEVISION SYSTEM

THIS PLAN IS ACCURATE FOR ELECTRICAL WORK ONLY.

EXISTING UTILITY FACILITIES HAVE NOT BEEN POSITIVELY IDENTIFIED.

SCALE: 1"=50'

E-11

STATE OF CALIFORNIA - DEPARTMENT OF TRANSPORTATION
Caltrans® ELECTRICAL DESIGN

FUNCTIONAL SUPERVISOR: ALI BAKHDOUD
CALCULATED-DESIGNED BY: ANHHUY NGUYEN
CHECKED BY: XAVIER ALFARO
REVISED BY
DATE REVISED

LAST REVISION 03-09-09
DATE PLOTTED => 20-JAN-2010
TIME PLOTTED => 05:49

Dist	COUNTY	ROUTE	POST MILES TOTAL PROJECT	SHEET No.	TOTAL SHEETS
05	Mon	1	72.4/R101.6	17	51

REGISTERED ELECT ENGINEER 03-16-09 DATE

5-4-09
PLANS APPROVAL DATE

REGISTERED PROFESSIONAL ENGINEER XAVIER IVANHOE ALFARO No. 17488 Exp. 6/30/09 ELECT STATE OF CALIFORNIA

THE STATE OF CALIFORNIA OR ITS OFFICERS OR AGENTS SHALL NOT BE RESPONSIBLE FOR THE ACCURACY OR COMPLETENESS OF ELECTRONIC COPIES OF THIS PLAN SHEET.

NOTES:

1. FOR COMPLETE RIGHT OF WAY AND ACCURATE ACCESS DATA, SEE RIGHT OF WAY RECORD MAPS AT DISTRICT OFFICE.
2. FOR ADDITIONAL NOTES AND LOCATIONS SEE SHEET E-1, E-2, AND E-3.

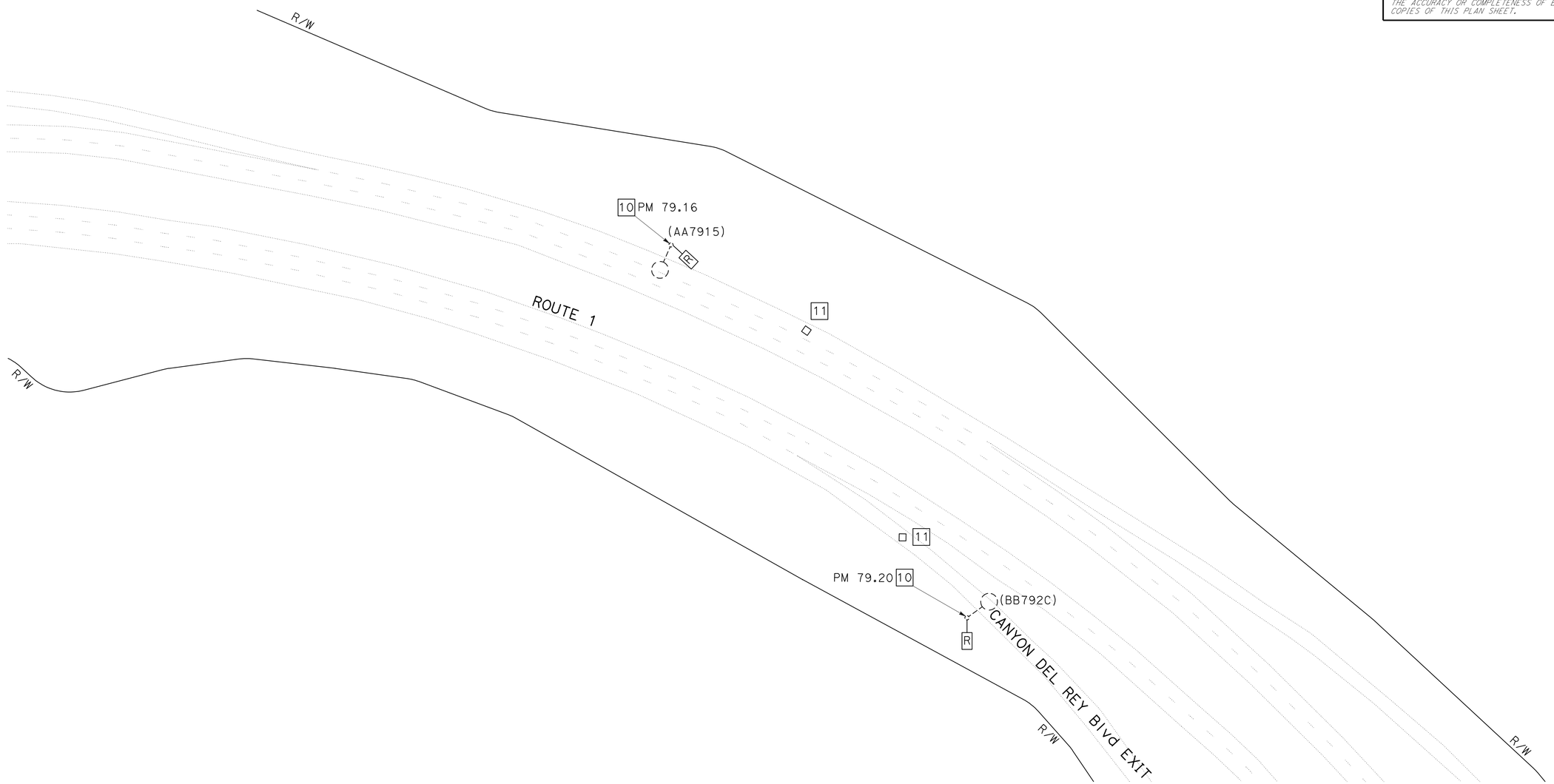

LOCATION 13

WIRELESS VEHICLE DETECTION SYSTEM

SCALE: 1"=50'

E-12

THIS PLAN IS ACCURATE FOR ELECTRICAL WORK ONLY.

EXISTING UTILITY FACILITIES HAVE NOT BEEN POSITIVELY IDENTIFIED.

STATE OF CALIFORNIA - DEPARTMENT OF TRANSPORTATION
Caltrans **ELECTRICAL DESIGN**

FUNCTIONAL SUPERVISOR: ALI BAKHDOUD

CALCULATED-DESIGNED BY: ANHHUY NGUYEN
CHECKED BY: XAVIER ALFARO

REVISED BY | DATE REVISED

LAST REVISION 03-09-09 | DATE PLOTTED => 20-JAN-2010 | TIME PLOTTED => 05:49

BORDER LAST REVISED 3/1/2007 | RELATIVE BORDER SCALE IS IN INCHES 0 1 2 3 | USERNAME => trmikesl | DGN FILE => 50n260ua012.dgn | CU 06391 | EA 0N2601

Dist	COUNTY	ROUTE	POST MILES TOTAL PROJECT	SHEET No.	TOTAL SHEETS
05	Mon	1	72.4/R101.6	18	51

REGISTERED ELECTRICAL ENGINEER 03-16-09 DATE

5-4-09
PLANS APPROVAL DATE

REGISTERED PROFESSIONAL ENGINEER
XAVIER IVANHOE ALFARO
No. 17488
Exp. 6/30/09
ELECTRICAL
STATE OF CALIFORNIA

THE STATE OF CALIFORNIA OR ITS OFFICERS OR AGENTS SHALL NOT BE RESPONSIBLE FOR THE ACCURACY OR COMPLETENESS OF SCANNED COPIES OF THIS PLAN SHEET.

NOTES:

1. FOR COMPLETE RIGHT OF WAY AND ACCURATE ACCESS DATA, SEE RIGHT OF WAY RECORD MAPS AT DISTRICT OFFICE.
2. FOR ADDITIONAL NOTES AND LOCATIONS SEE SHEET E-1, E-2, AND E-3.

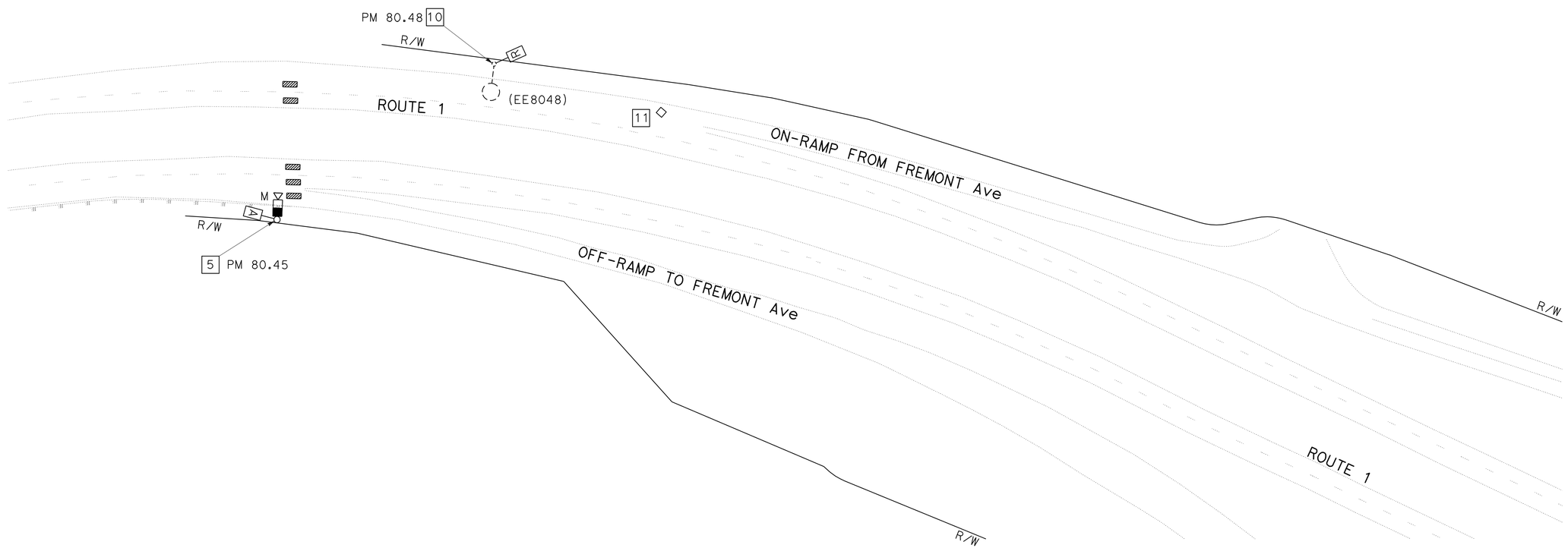

LOCATION 15

WIRELESS VEHICLE DETECTION SYSTEM
MICROWAVE VEHICLE DETECTION SYSTEM

SCALE: 1"=50'

E-13

THIS PLAN IS ACCURATE FOR ELECTRICAL WORK ONLY.

EXISTING UTILITY FACILITIES HAVE NOT BEEN POSITIVELY IDENTIFIED.

STATE OF CALIFORNIA - DEPARTMENT OF TRANSPORTATION
Caltrans® ELECTRICAL DESIGN

FUNCTIONAL SUPERVISOR: ALI BAKHDOUD
CALCULATED-DESIGNED BY: ANHHUY NGUYEN
CHECKED BY: XAVIER ALFARO
REVISED BY
DATE REVISED

LAST REVISION 03-09-09
DATE PLOTTED => 20-JAN-2010
TIME PLOTTED => 05:49

Dist	COUNTY	ROUTE	POST MILES TOTAL PROJECT	SHEET No.	TOTAL SHEETS
05	Mon	1	72.4/R101.6	19	51

REGISTERED ELECTRICAL ENGINEER 03-16-09 DATE

5-4-09
PLANS APPROVAL DATE

REGISTERED PROFESSIONAL ENGINEER
XAVIER IVANHOE ALFARO
No. 17488
Exp. 6/30/09
ELECTRICAL
STATE OF CALIFORNIA

THE STATE OF CALIFORNIA OR ITS OFFICERS OR AGENTS SHALL NOT BE RESPONSIBLE FOR THE ACCURACY OR COMPLETENESS OF SCANNED COPIES OF THIS PLAN SHEET.

NOTES:

1. FOR COMPLETE RIGHT OF WAY AND ACCURATE ACCESS DATA, SEE RIGHT OF WAY RECORD MAPS AT DISTRICT OFFICE.
2. FOR ADDITIONAL NOTES AND LOCATIONS SEE SHEET E-1, E-2, AND E-3.

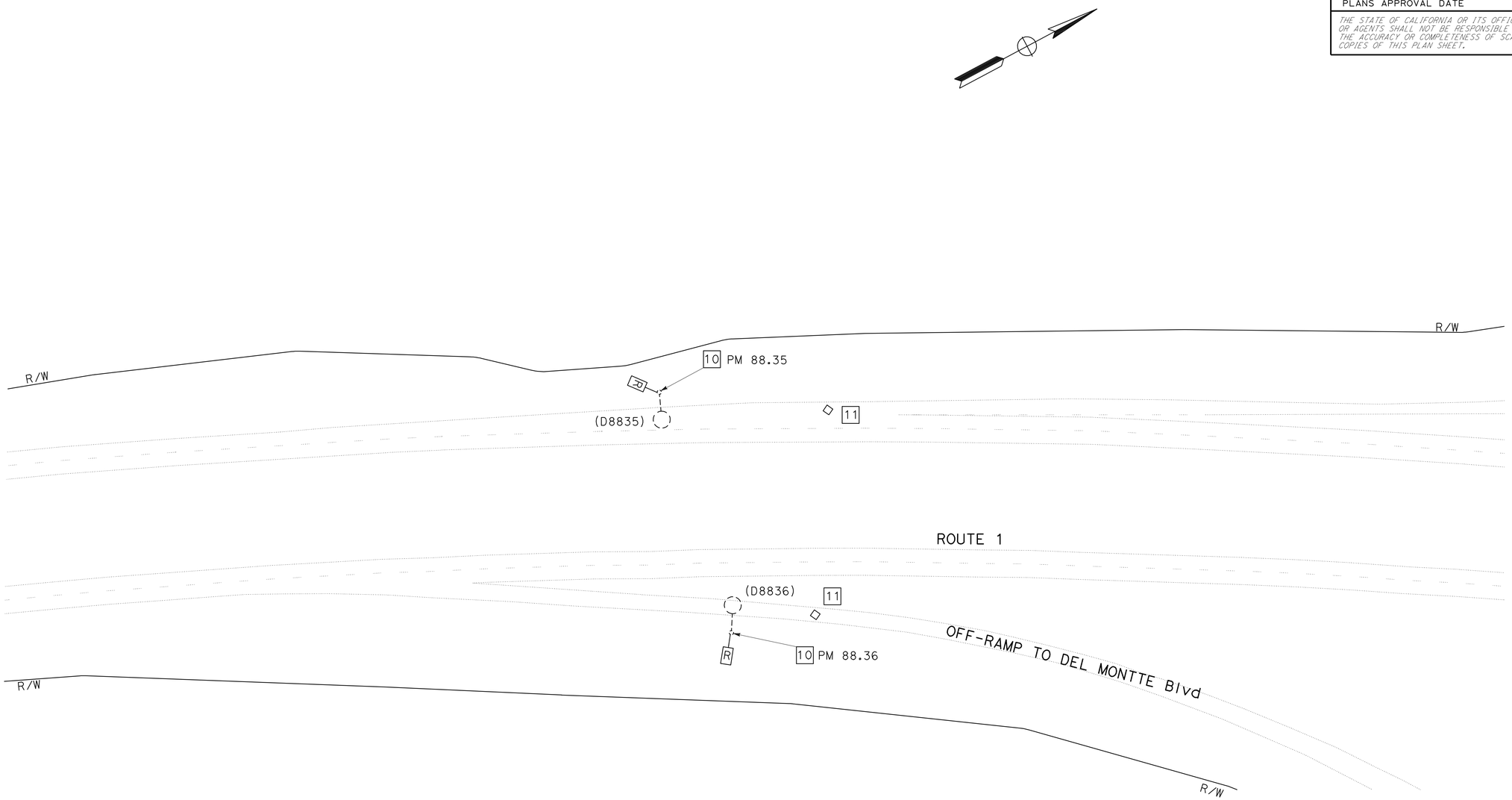

LOCATION 22

WIRELESS VEHICLE DETECTION SYSTEM

SCALE: 1"=50'

E-14

THIS PLAN IS ACCURATE FOR ELECTRICAL WORK ONLY.

EXISTING UTILITY FACILITIES HAVE NOT BEEN POSITIVELY IDENTIFIED.

STATE OF CALIFORNIA - DEPARTMENT OF TRANSPORTATION
Caltrans® **ELECTRICAL DESIGN**

FUNCTIONAL SUPERVISOR: ALI BAKHDOUD

CALCULATED-DESIGNED BY: ANHHUY NGUYEN
CHECKED BY: XAVIER ALFARO

REVISED BY
DATE REVISED

LAST REVISION 03-09-09
DATE PLOTTED => 20-JAN-2010
TIME PLOTTED => 05:50

Dist	COUNTY	ROUTE	POST MILES TOTAL PROJECT	SHEET No.	TOTAL SHEETS
05	Mon	1	72.4/R101.6	20	51

REGISTERED ELECTRICAL ENGINEER 03-16-09 DATE

5-4-09
PLANS APPROVAL DATE

REGISTERED PROFESSIONAL ENGINEER
XAVIER IVANHOE ALFARO
No. 17488
Exp. 6/30/09
ELECTRICAL
STATE OF CALIFORNIA

THE STATE OF CALIFORNIA OR ITS OFFICERS OR AGENTS SHALL NOT BE RESPONSIBLE FOR THE ACCURACY OR COMPLETENESS OF ELECTRONIC COPIES OF THIS PLAN SHEET.

NOTES:

1. FOR COMPLETE RIGHT OF WAY AND ACCURATE ACCESS DATA, SEE RIGHT OF WAY RECORD MAPS AT DISTRICT OFFICE.
2. FOR ADDITIONAL NOTES AND LOCATIONS SEE SHEET E-1, E-2, AND E-3.

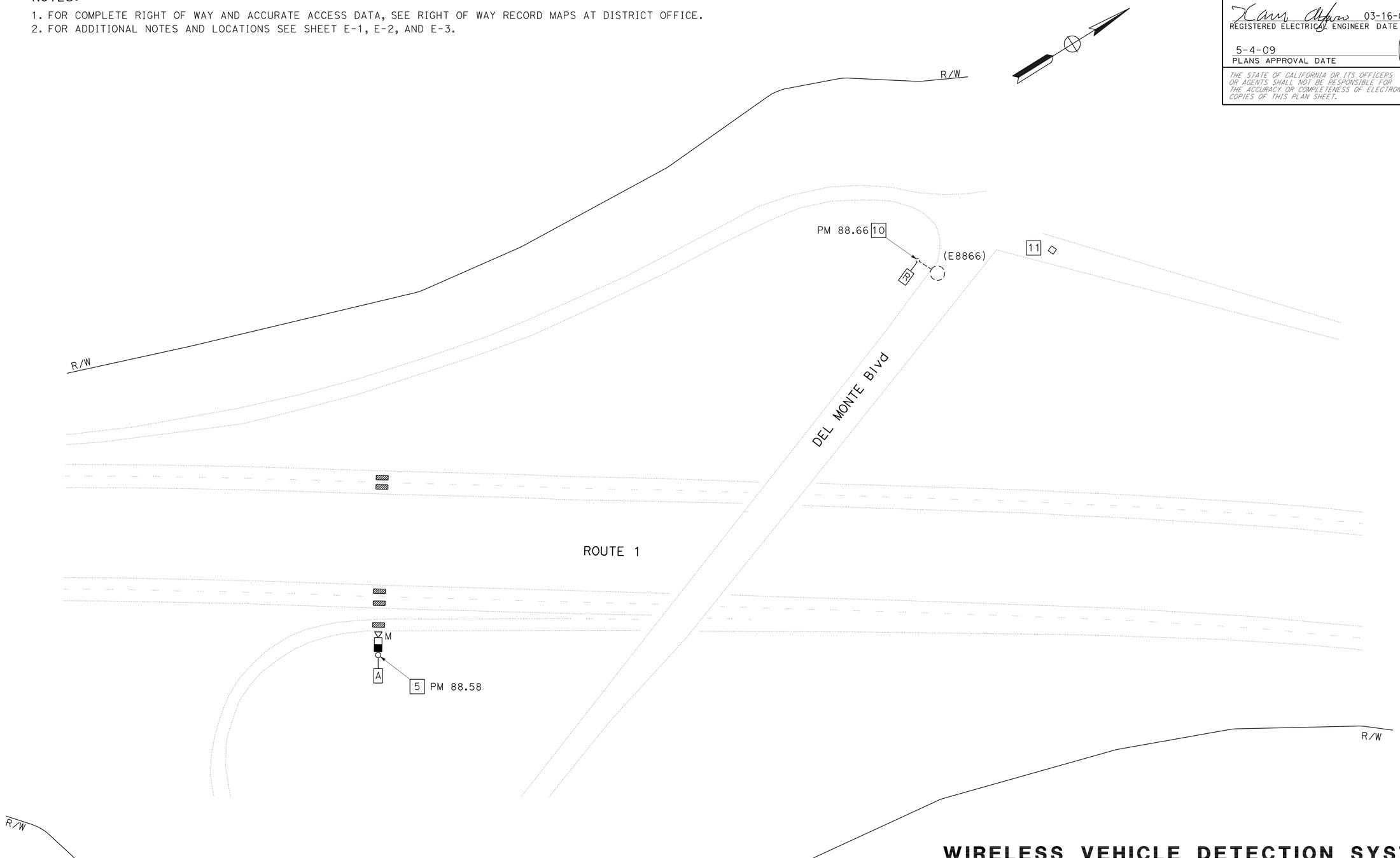

LOCATION 22

WIRELESS VEHICLE DETECTION SYSTEM
MICROWAVE VEHICLE DETECTION SYSTEM

SCALE: 1"=50'

E-15

THIS PLAN IS ACCURATE FOR ELECTRICAL WORK ONLY.

EXISTING UTILITY FACILITIES HAVE NOT BEEN POSITIVELY IDENTIFIED.

STATE OF CALIFORNIA - DEPARTMENT OF TRANSPORTATION
Caltrans **ELECTRICAL DESIGN**

FUNCTIONAL SUPERVISOR: ALI BAKHDOUD
CALCULATED-DESIGNED BY: ANHHUY NGUYEN
CHECKED BY: XAVIER ALFARO
REVISED BY
DATE REVISED

LAST REVISION 03-09-09
DATE PLOTTED => 20-JAN-2010
TIME PLOTTED => 05:50

Dist	COUNTY	ROUTE	POST MILES TOTAL PROJECT	SHEET No.	TOTAL SHEETS
05	Mon	1	72.4/R101.6	21	51

REGISTERED ELECTRICAL ENGINEER 03-16-09 DATE

5-4-09
PLANS APPROVAL DATE

REGISTERED PROFESSIONAL ENGINEER
XAVIER IVANHOE ALFARO
No. 17488
Exp. 6/30/09
ELECTRICAL
STATE OF CALIFORNIA

THE STATE OF CALIFORNIA OR ITS OFFICERS OR AGENTS SHALL NOT BE RESPONSIBLE FOR THE ACCURACY OR COMPLETENESS OF SCANNED COPIES OF THIS PLAN SHEET.

NOTES:

1. FOR COMPLETE RIGHT OF WAY AND ACCURATE ACCESS DATA, SEE RIGHT OF WAY RECORD MAPS AT DISTRICT OFFICE.
2. FOR ADDITIONAL NOTES AND LOCATIONS SEE SHEET E-1, E-2, AND E-3.

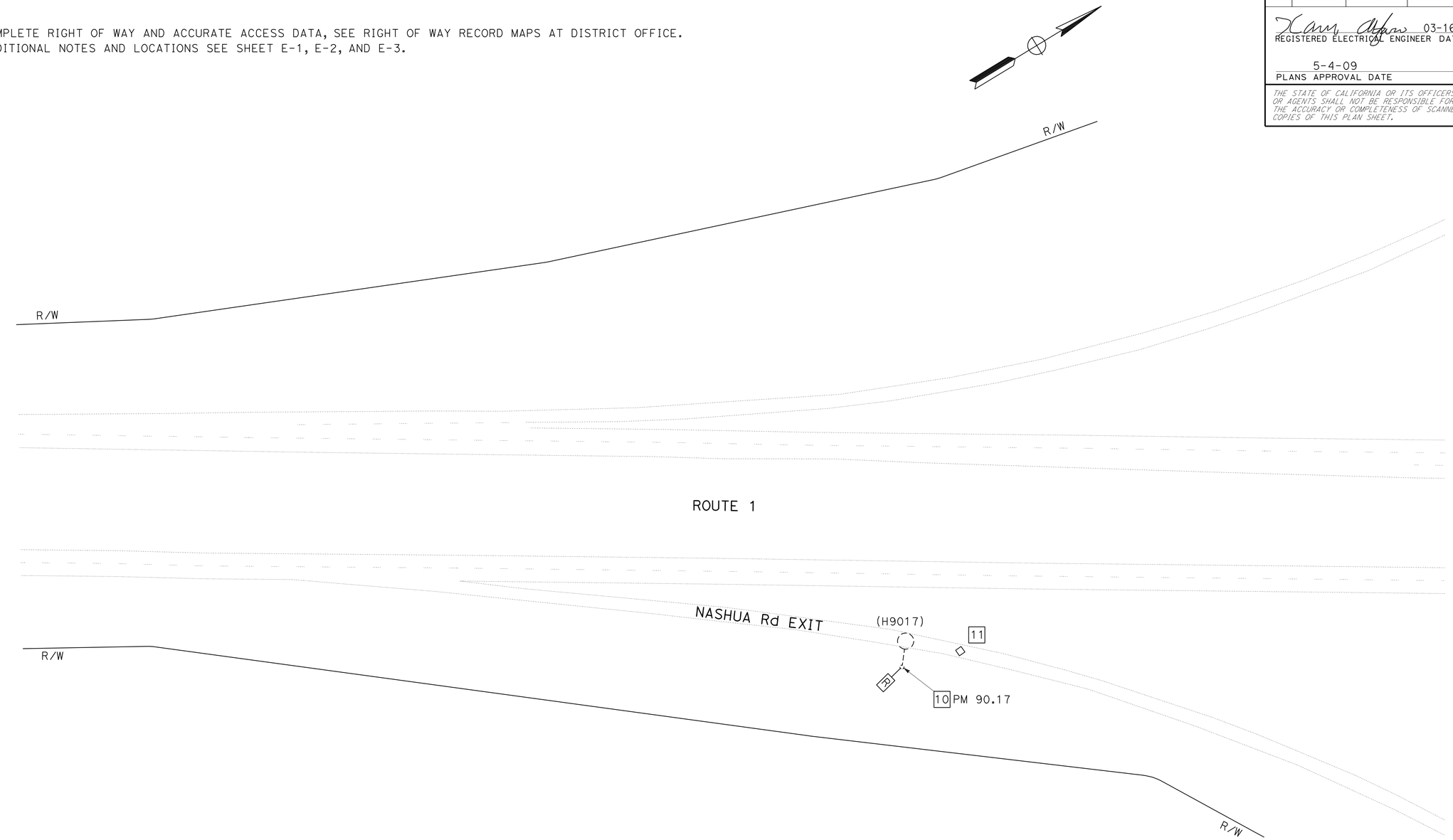

LOCATION 23

WIRELESS VEHICLE DETECTION SYSTEM

SCALE: 1"=50'

E-16

THIS PLAN IS ACCURATE FOR ELECTRICAL WORK ONLY.

EXISTING UTILITY FACILITIES HAVE NOT BEEN POSITIVELY IDENTIFIED.

STATE OF CALIFORNIA - DEPARTMENT OF TRANSPORTATION
Caltrans® ELECTRICAL DESIGN

FUNCTIONAL SUPERVISOR: ALI BAKHDOUD
CALCULATED-DESIGNED BY: XAVIER ALFARO
CHECKED BY: ANHHUY NGUYEN
REVISED BY
DATE REVISED

LAST REVISION 03-09-09
DATE PLOTTED => 20-JAN-2010
TIME PLOTTED => 05:50

Dist	COUNTY	ROUTE	POST MILES TOTAL PROJECT	SHEET No.	TOTAL SHEETS
05	Mon	1	72.4/R101.6	22	51

REGISTERED ELECTRICAL ENGINEER 03-16-09 DATE

5-4-09
PLANS APPROVAL DATE

REGISTERED PROFESSIONAL ENGINEER
XAVIER IVANHOE ALFARO
No. 17488
Exp. 6/30/09
ELECTRICAL
STATE OF CALIFORNIA

THE STATE OF CALIFORNIA OR ITS OFFICERS OR AGENTS SHALL NOT BE RESPONSIBLE FOR THE ACCURACY OR COMPLETENESS OF SCANNED COPIES OF THIS PLAN SHEET.

NOTES:

1. FOR COMPLETE RIGHT OF WAY AND ACCURATE ACCESS DATA, SEE RIGHT OF WAY RECORD MAPS AT DISTRICT OFFICE.
2. FOR ADDITIONAL NOTES AND LOCATIONS SEE SHEET E-1, E-2, AND E-3.

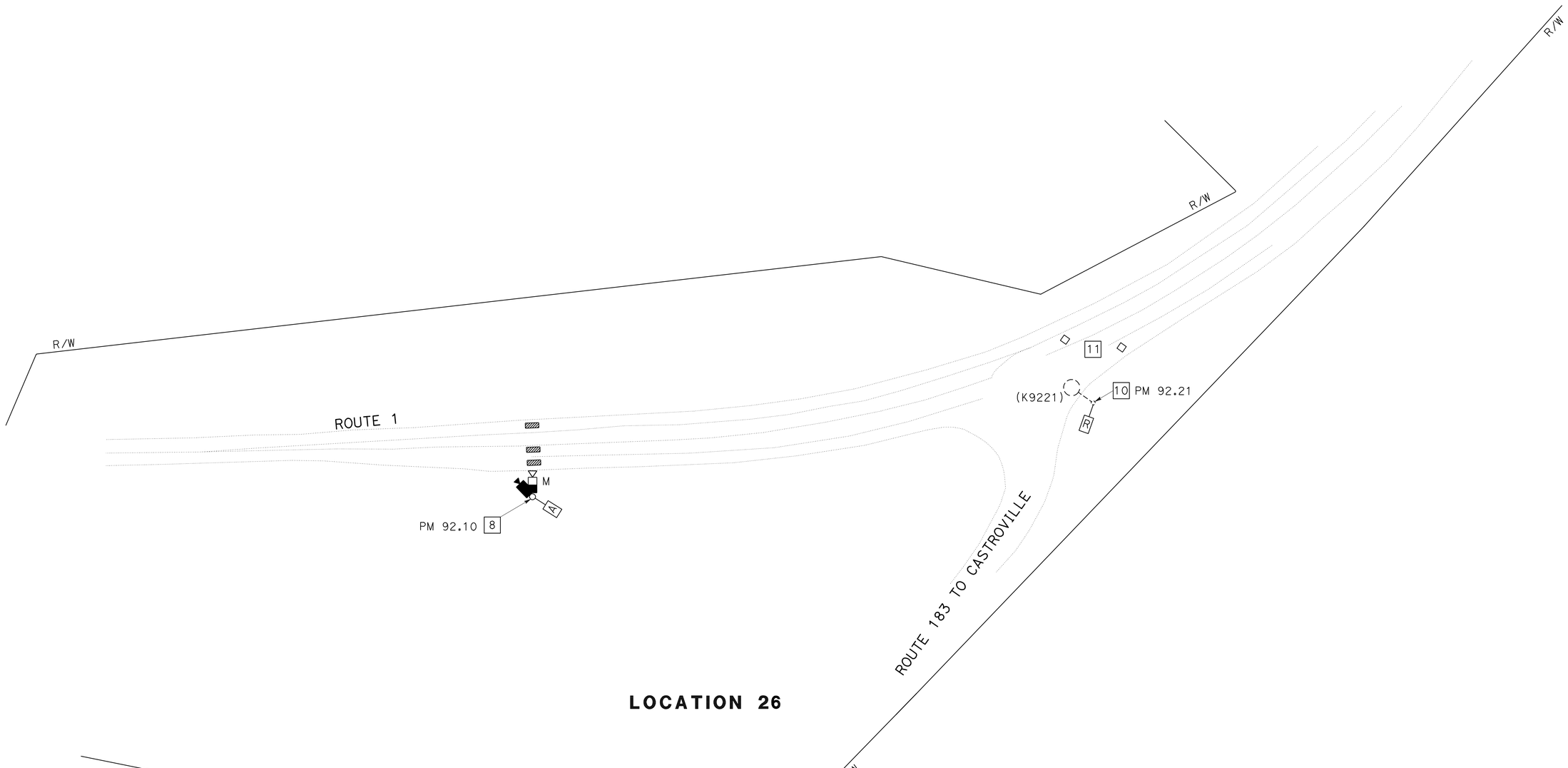

LOCATION 26

WIRELESS VEHICLE DETECTION SYSTEM
MICROWAVE VEHICLE DETECTION SYSTEM
CLOSED CIRCUIT TELEVISION SYSTEM

THIS PLAN IS ACCURATE FOR ELECTRICAL WORK ONLY.

EXISTING UTILITY FACILITIES HAVE NOT BEEN POSITIVELY IDENTIFIED.

SCALE: 1"=50'

E-17

STATE OF CALIFORNIA - DEPARTMENT OF TRANSPORTATION
Caltrans® ELECTRICAL DESIGN

FUNCTIONAL SUPERVISOR: ALI BAKHDOUD
CALCULATED-DESIGNED BY: ANHHUY NGUYEN
CHECKED BY: XAVIER ALFARO
REVISED BY
DATE REVISED

LAST REVISION DATE PLOTTED => 20-JAN-2010
03-09-09 TIME PLOTTED => 05:50

Dist	COUNTY	ROUTE	POST MILES TOTAL PROJECT	SHEET No.	TOTAL SHEETS
05	Mon	1	72.4/R101.6	23	51

REGISTERED ELECTRICAL ENGINEER 03-16-09 DATE

5-4-09
PLANS APPROVAL DATE

REGISTERED PROFESSIONAL ENGINEER
XAVIER IVANHOE ALFARO
No. 17488
Exp. 6/30/09
ELECTRICAL
STATE OF CALIFORNIA

THE STATE OF CALIFORNIA OR ITS OFFICERS OR AGENTS SHALL NOT BE RESPONSIBLE FOR THE ACCURACY OR COMPLETENESS OF SCANNED COPIES OF THIS PLAN SHEET.

NOTES:

1. FOR COMPLETE RIGHT OF WAY AND ACCURATE ACCESS DATA, SEE RIGHT OF WAY RECORD MAPS AT DISTRICT OFFICE.
2. FOR ADDITIONAL NOTES AND LOCATIONS SEE SHEET E-1, E-2, AND E-3.

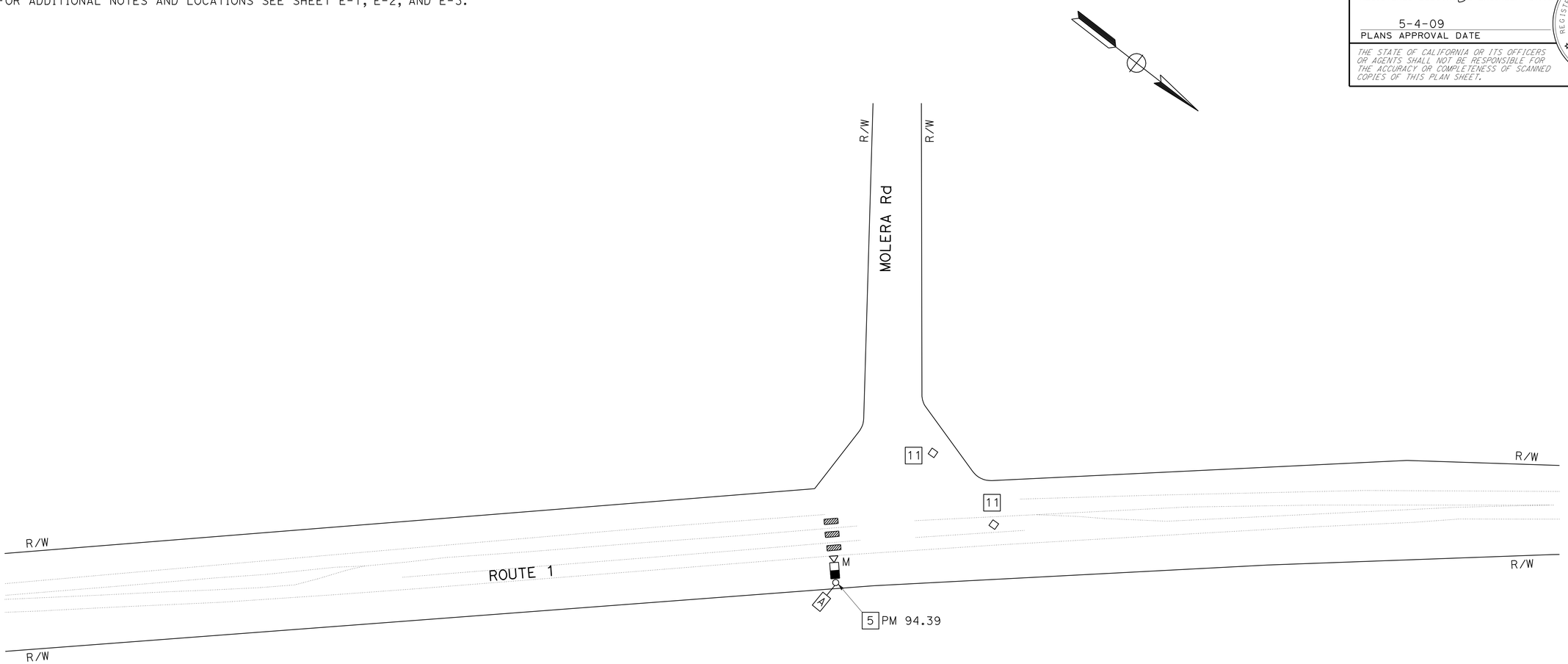

LOCATION 27

WIRELESS VEHICLE DETECTION SYSTEM
MICROWAVE VEHICLE DETECTION SYSTEM

THIS PLAN IS ACCURATE FOR ELECTRICAL WORK ONLY.

EXISTING UTILITY FACILITIES HAVE NOT BEEN POSITIVELY IDENTIFIED.

SCALE: 1"=50'

E-18

STATE OF CALIFORNIA - DEPARTMENT OF TRANSPORTATION
Caltrans® **ELECTRICAL DESIGN**

FUNCTIONAL SUPERVISOR: ALI BAKHDOUD

CALCULATED-DESIGNED BY: ANHHUY NGUYEN
CHECKED BY: XAVIER ALFARO

REVISED BY
DATE REVISED

LAST REVISION DATE PLOTTED => 20-JAN-2010
03-09-09 TIME PLOTTED => 05:50

Dist	COUNTY	ROUTE	POST MILES TOTAL PROJECT	SHEET No.	TOTAL SHEETS
05	Mon	1	72.4/R101.6	24	51

REGISTERED ELECTRICAL ENGINEER 03-16-09 DATE

5-4-09
PLANS APPROVAL DATE

REGISTERED PROFESSIONAL ENGINEER
XAVIER IVANHOE ALFARO
No. 17488
Exp. 6/30/09
ELECTRICAL
STATE OF CALIFORNIA

THE STATE OF CALIFORNIA OR ITS OFFICERS OR AGENTS SHALL NOT BE RESPONSIBLE FOR THE ACCURACY OR COMPLETENESS OF SCANNED COPIES OF THIS PLAN SHEET.

NOTES:

1. FOR COMPLETE RIGHT OF WAY AND ACCURATE ACCESS DATA, SEE RIGHT OF WAY RECORD MAPS AT DISTRICT OFFICE.
2. FOR ADDITIONAL NOTES AND LOCATIONS SEE SHEET E-1, E-2, AND E-3.

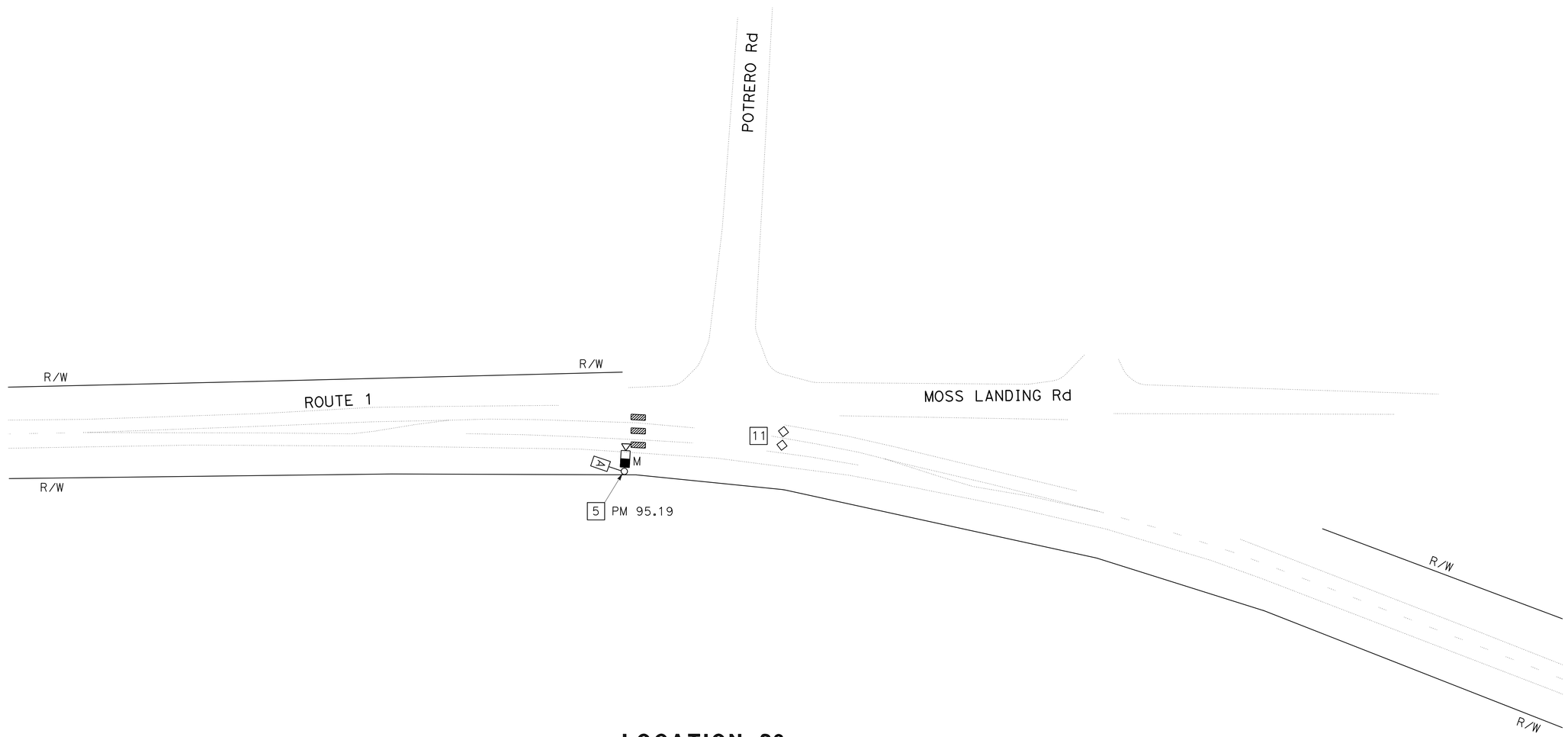

LOCATION 28

WIRELESS VEHICLE DETECTION SYSTEM
MICROWAVE VEHICLE DETECTION SYSTEM

THIS PLAN IS ACCURATE FOR ELECTRICAL WORK ONLY.

EXISTING UTILITY FACILITIES HAVE NOT BEEN POSITIVELY IDENTIFIED.

SCALE: 1"=50'

E-19

STATE OF CALIFORNIA - DEPARTMENT OF TRANSPORTATION
Caltrans® ELECTRICAL DESIGN

FUNCTIONAL SUPERVISOR: ALI BAKHDOUD

CALCULATED-DESIGNED BY: ANHHUY NGUYEN
CHECKED BY: XAVIER ALFARO

REVISED BY
DATE REVISED

LAST REVISION 03-10-09
DATE PLOTTED => 20-JAN-2010
TIME PLOTTED => 05:50

Dist	COUNTY	ROUTE	POST MILES TOTAL PROJECT	SHEET No.	TOTAL SHEETS
05	Mon	1	72.4/R101.6	25	51

REGISTERED ELECTRICAL ENGINEER 03-16-09 DATE

5-4-09
PLANS APPROVAL DATE

REGISTERED PROFESSIONAL ENGINEER
XAVIER IVANHOE ALFARO
No. 17488
Exp. 6/30/09
ELECTRICAL
STATE OF CALIFORNIA

THE STATE OF CALIFORNIA OR ITS OFFICERS OR AGENTS SHALL NOT BE RESPONSIBLE FOR THE ACCURACY OR COMPLETENESS OF SCANNED COPIES OF THIS PLAN SHEET.

NOTES:

1. FOR COMPLETE RIGHT OF WAY AND ACCURATE ACCESS DATA, SEE RIGHT OF WAY RECORD MAPS AT DISTRICT OFFICE.
2. FOR ADDITIONAL NOTES AND LOCATIONS SEE SHEET E-1, E-2, AND E-3.

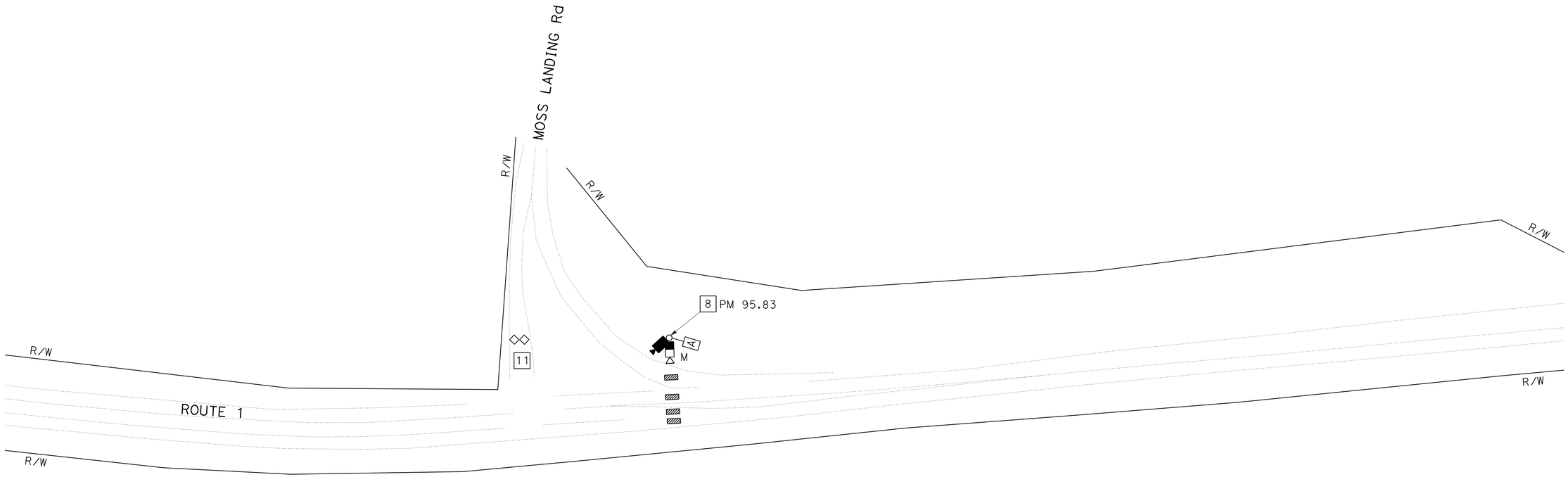

LOCATION 29

WIRELESS VEHICLE DETECTION SYSTEM
MICROWAVE VEHICLE DETECTION SYSTEM
CLOSED CIRCUIT TELEVISION SYSTEM

THIS PLAN IS ACCURATE FOR ELECTRICAL WORK ONLY.

EXISTING UTILITY FACILITIES HAVE NOT BEEN POSITIVELY IDENTIFIED.

SCALE: 1"=50'

E-20

STATE OF CALIFORNIA - DEPARTMENT OF TRANSPORTATION
Caltrans® ELECTRICAL DESIGN

FUNCTIONAL SUPERVISOR: ALI BAKHDOUD

CALCULATED-DESIGNED BY: ANHHUY NGUYEN
CHECKED BY: XAVIER ALFARO

REVISED BY
DATE REVISED

LAST REVISION 03-10-09
DATE PLOTTED => 20-JAN-2010
TIME PLOTTED => 05:51

Dist	COUNTY	ROUTE	POST MILES TOTAL PROJECT	SHEET No.	TOTAL SHEETS
05	Mon	1	72.4/R101.6	26	51

REGISTERED ELECTRICAL ENGINEER 03-16-09 DATE

5-4-09
PLANS APPROVAL DATE

REGISTERED PROFESSIONAL ENGINEER
XAVIER IVANHOE ALFARO
No. 17488
Exp. 6/30/09
ELECTRICAL
STATE OF CALIFORNIA

THE STATE OF CALIFORNIA OR ITS OFFICERS OR AGENTS SHALL NOT BE RESPONSIBLE FOR THE ACCURACY OR COMPLETENESS OF SCANNED COPIES OF THIS PLAN SHEET.

NOTES:

1. FOR COMPLETE RIGHT OF WAY AND ACCURATE ACCESS DATA, SEE RIGHT OF WAY RECORD MAPS AT DISTRICT OFFICE.
2. FOR ADDITIONAL NOTES AND LOCATIONS SEE SHEET E-1, E-2, AND E-3.

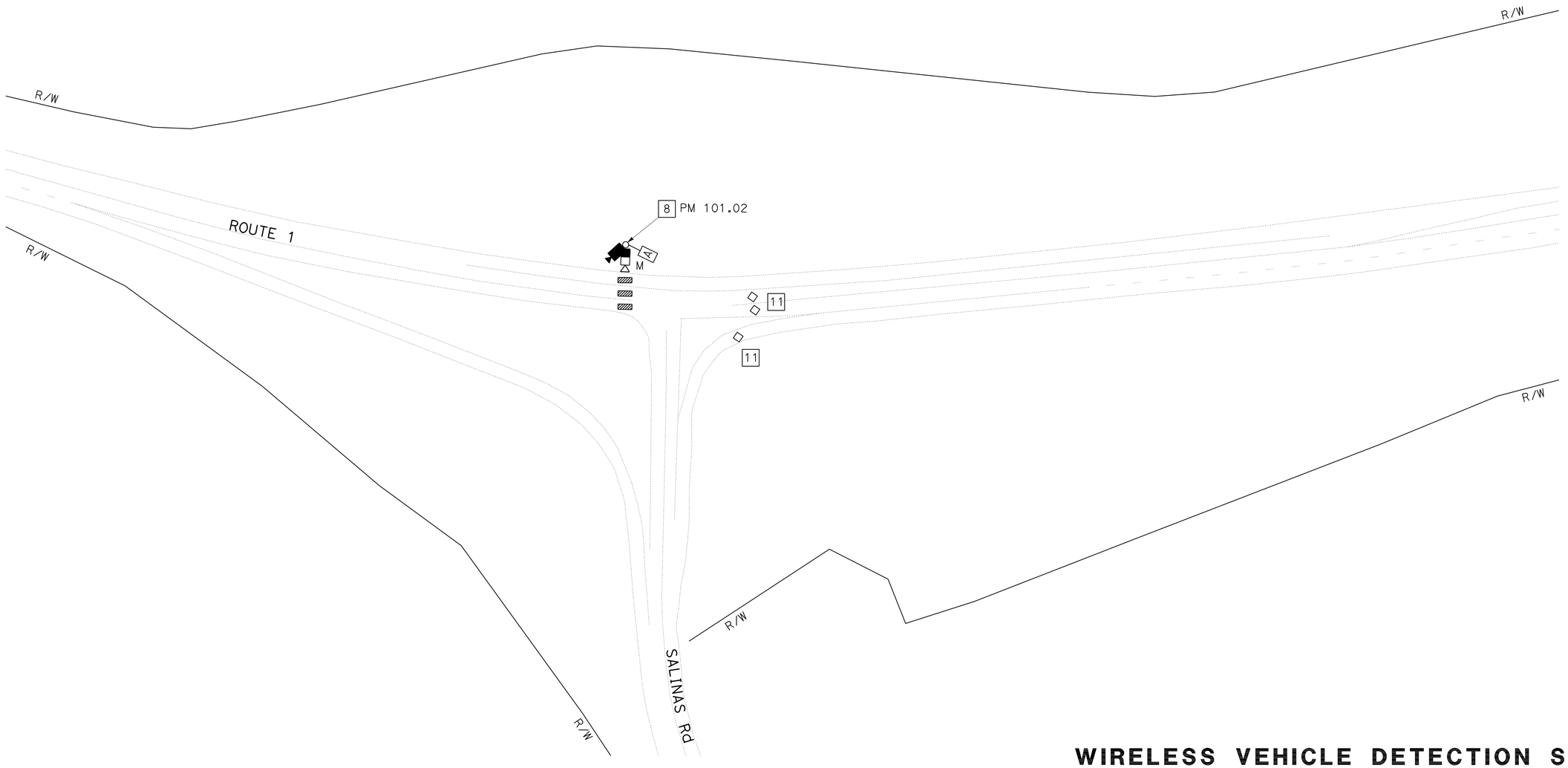

LOCATION 33

WIRELESS VEHICLE DETECTION SYSTEM
MICROWAVE VEHICLE DETECTION SYSTEM
CLOSED CIRCUIT TELEVISION SYSTEM

THIS PLAN IS ACCURATE FOR ELECTRICAL WORK ONLY.

EXISTING UTILITY FACILITIES HAVE NOT BEEN POSITIVELY IDENTIFIED.

SCALE: 1"=50'

E-21

STATE OF CALIFORNIA - DEPARTMENT OF TRANSPORTATION
Caltrans® ELECTRICAL DESIGN

FUNCTIONAL SUPERVISOR: ALI BAKHDOUD
CALCULATED-DESIGNED BY: ANHHUY NGUYEN
CHECKED BY: XAVIER ALFARO
REVISED BY
DATE REVISED

LAST REVISION 03-10-09
DATE PLOTTED => 20-JAN-2010
TIME PLOTTED => 06:51

Dist	COUNTY	ROUTE	POST MILES TOTAL PROJECT	SHEET No.	TOTAL SHEETS
05	Mon	1	72.4/R101.6	27	51

REGISTERED ELECTRICAL ENGINEER 03-16-09 DATE

5-4-09
PLANS APPROVAL DATE

REGISTERED PROFESSIONAL ENGINEER XAVIER IVANHOE ALFARO No. 17488 Exp. 6/30/09 ELECTRICAL STATE OF CALIFORNIA

THE STATE OF CALIFORNIA OR ITS OFFICERS OR AGENTS SHALL NOT BE RESPONSIBLE FOR THE ACCURACY OR COMPLETENESS OF SCANNED COPIES OF THIS PLAN SHEET.

NOTES: (THIS SHEET ONLY)

1. MVDS CABLE TO MVDS SENSOR UNIT.
2. Min DIMENSIONS 24" W x 24" H x 8" D NEMA 4 ENCLOSURE WITH HINGED DOOR, PADLOCK HASP AND INTERIOR PANEL FOR THE EQUIPMENT.

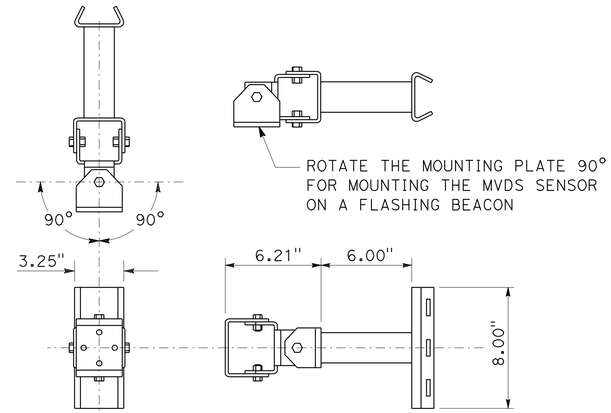

MVDS SENSOR MOUNTING BRACKET (3-AXIS VERSION)

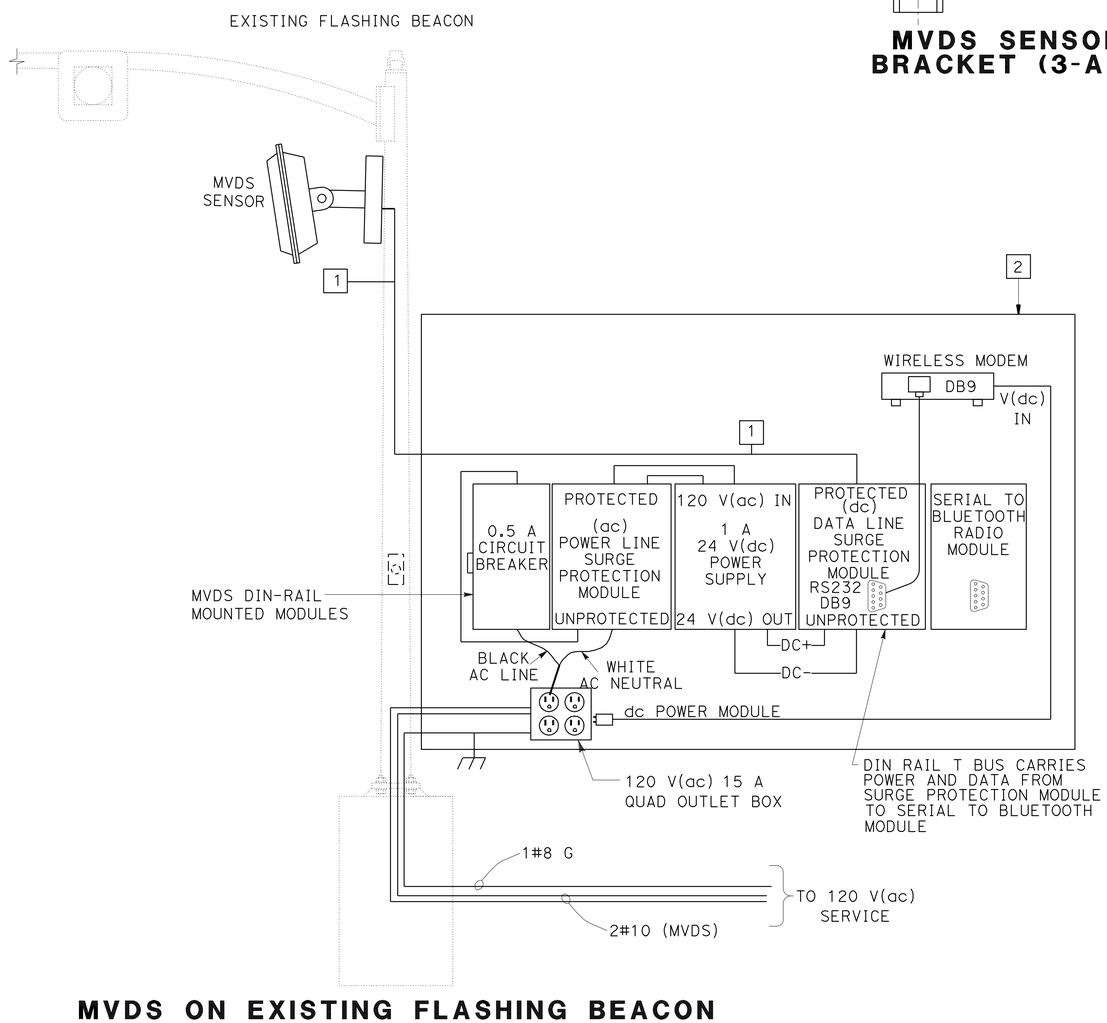

MVDS ON EXISTING FLASHING BEACON AND NEMA ENCLOSURE WIRING DETAIL

(Loc 1, 4)

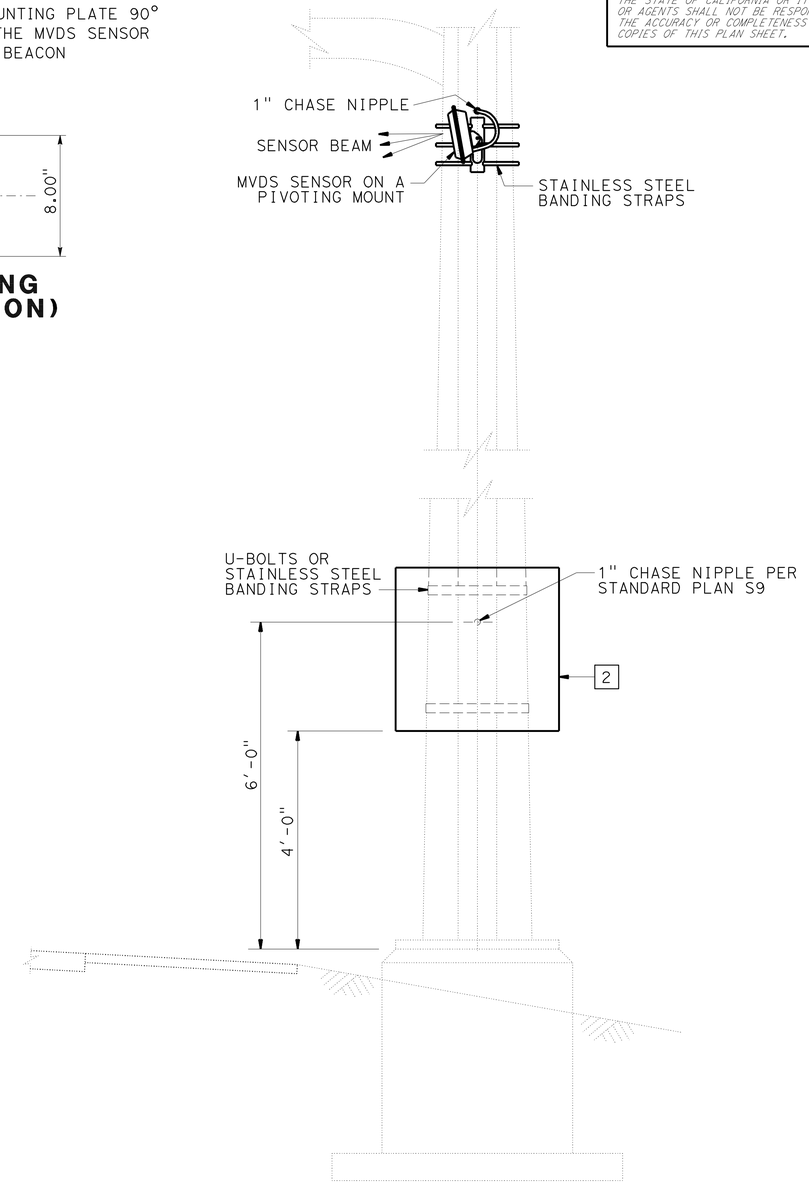

Loc 1, 4

MICROWAVE VEHICLE DETECTION SYSTEM (ELECTRICAL DETAILS)

NO SCALE

E-22

THIS PLAN IS ACCURATE FOR ELECTRICAL WORK ONLY.

STATE OF CALIFORNIA - DEPARTMENT OF TRANSPORTATION
Caltrans ELECTRICAL DESIGN

FUNCTIONAL SUPERVISOR: ALI BAKHDOUD
CALCULATED-DESIGNED BY: XAVIER ALFARO
CHECKED BY: ANHHUY NGUYEN
REVISED BY
DATE REVISED

LAST REVISION 03-10-09
DATE PLOTTED => 20-JAN-2010
TIME PLOTTED => 05:51

Dist	COUNTY	ROUTE	POST MILES TOTAL PROJECT	SHEET No.	TOTAL SHEETS
05	Mon	1	72.4/R101.6	28	51

REGISTERED ELECTRICAL ENGINEER 03-16-09 DATE

5-4-09
PLANS APPROVAL DATE

REGISTERED PROFESSIONAL ENGINEER XAVIER IVANHOE ALFARO No. 17488 Exp. 6/30/09 ELECTRICAL STATE OF CALIFORNIA

THE STATE OF CALIFORNIA OR ITS OFFICERS OR AGENTS SHALL NOT BE RESPONSIBLE FOR THE ACCURACY OR COMPLETENESS OF SCANNED COPIES OF THIS PLAN SHEET.

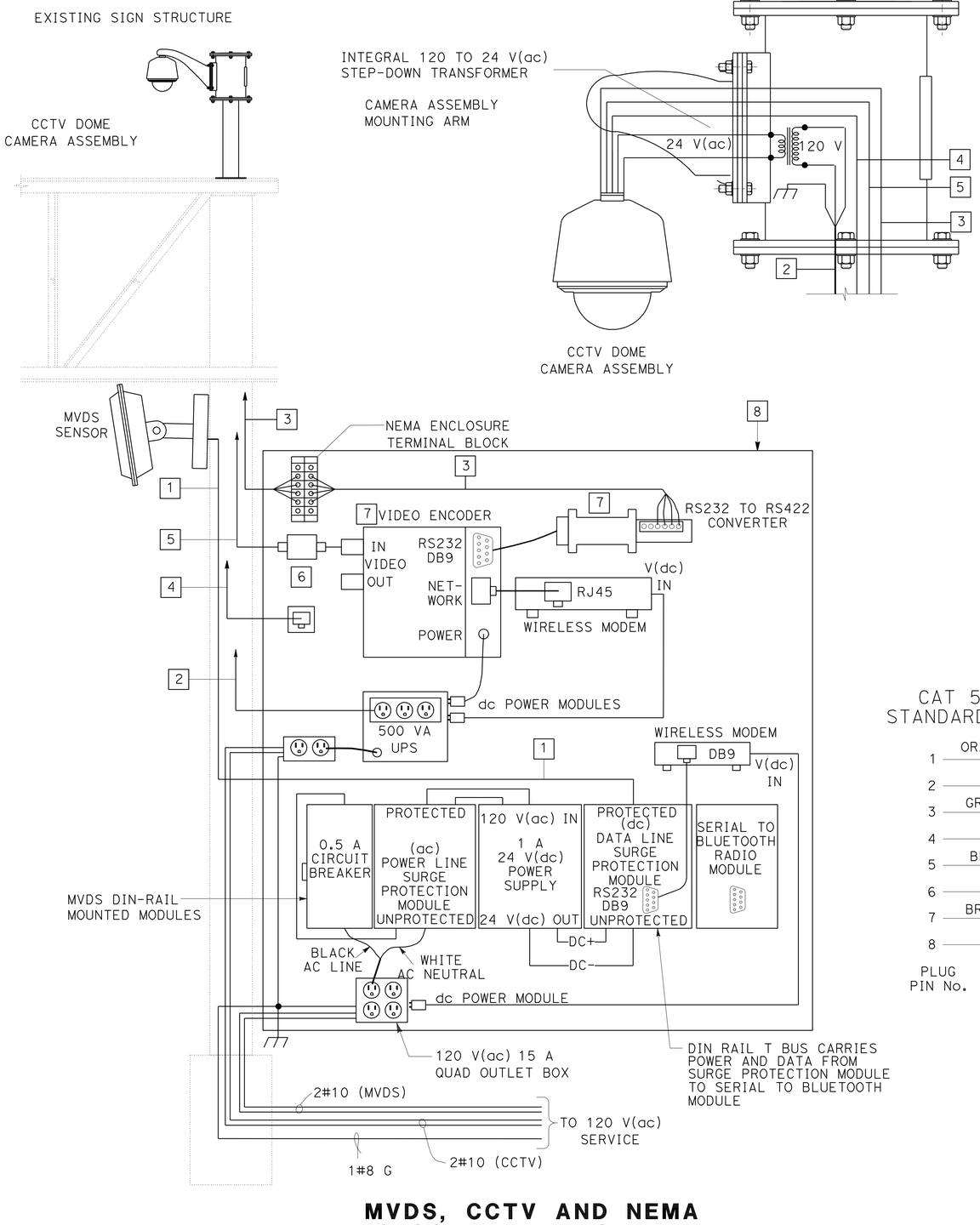

MVDS, CCTV AND NEMA ENCLOSURE WIRING DETAIL
(Loc 9)

NOTES: (THIS SHEET ONLY)

1. MVDS CABLE TO MVDS SENSOR UNIT.
2. CCTV POWER CORD.
3. 3-PAIR SIC CABLE. USE 2 PAIR FOR EIA-422 PAN/TILT/ZOOM COMMUNICATION BETWEEN THE CCTV CAMERA AND VIDEO ENCODER. ONE PAIR WILL REMAIN AS A SPARE. COLORS MAY VARY.
4. OCC (OUTDOOR CAT5E CABLE). PLUG INTO THE RJ-45 DATA PORT IN THE CCTV DOME CAMERA ASSEMBLY.
5. RG-59U COAXIAL CABLE: CENTER CONDUCTOR: 20 AWG SOLID COPPER
   BRAID SHIELD: WOVEN COPPER BRAID WITH MINIMIM 80% COVERAGE
   DIELECTRIC INSULATING MATERIAL: POLYURETHANE OR POLYETHYLENE
   OUTER JACKET: BLACK PVC
6. COAXIAL CABLE SURGE/LIGHTNING PROTECTOR: SURGE HANDLING: 5 kA; IMPEDANCE: 75 Ω;
   INSERTION LOSS: <0.1 dB @ 500 MHz; CONNECTORS: TYPE F OR BNC
7. STATE-FURNISHED AND INSTALLED MATERIAL.
8. Min DIMENSIONS 24" W x 24" H x 12" D NEMA 4 ENCLOSURE WITH HINGED DOOR, PADLOCK HASP AND INTERIOR PANEL FOR THE EQUIPMENT.

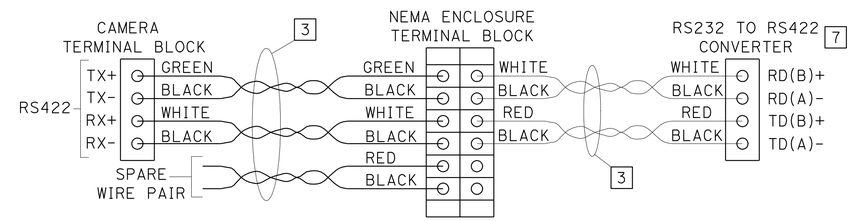

2 OR 3-PAIR RS-422 CABLE CONNECTIONS

OCC
CAT 5E 10BASE-T
STANDARD PATCH CABLE

PLUG PIN No.		PLUG OR JACK PIN No.
1	ORANGE/WHITE	1
2	ORANGE	2
3	GREEN/WHITE	3
4	BLUE	4
5	BLUE/WHITE	5
6	GREEN	6
7	BROWN/WHITE	7
8	BROWN	8

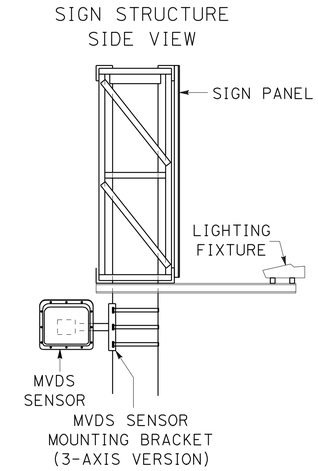

MVDS MOUNTING AND ORIENTATION DETAIL

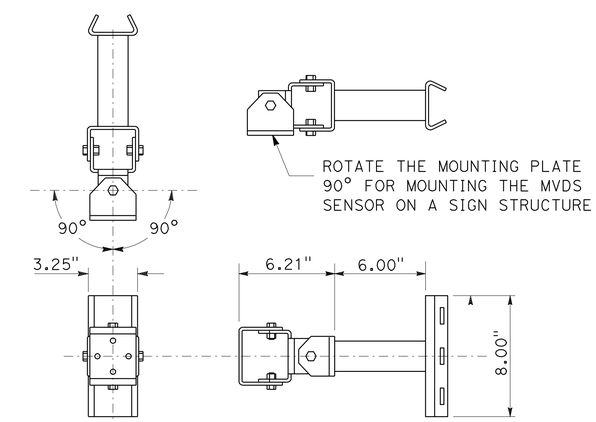

MVDS SENSOR MOUNTING BRACKET (3-AXIS VERSION)

MICROWAVE VEHICLE DETECTION SYSTEM
CLOSED CIRCUIT TELEVISION SYSTEM
(ELECTRICAL DETAILS)

NO SCALE

E-23

THIS PLAN IS ACCURATE FOR ELECTRICAL WORK ONLY.

STATE OF CALIFORNIA - DEPARTMENT OF TRANSPORTATION
Caltrans® ELECTRICAL DESIGN

FUNCTIONAL SUPERVISOR: ALI BAKHDOUD
CALCULATED-DESIGNED BY: ANHHUY NGUYEN
CHECKED BY: XAVIER ALFARO
REVISED BY
DATE REVISED

LAST REVISION 03-10-09 | DATE PLOTTED => 20-JAN-2010 | TIME PLOTTED => 05:51

Dist	COUNTY	ROUTE	POST MILES TOTAL PROJECT	SHEET No.	TOTAL SHEETS
05	Mon	1	72.4/R101.6	29	51

REGISTERED ELECTRICAL ENGINEER 03-16-09 DATE

5-4-09
PLANS APPROVAL DATE

REGISTERED PROFESSIONAL ENGINEER XAVIER IVANHOE ALFARO No. 17488 Exp. 6/30/09 ELECTRICAL STATE OF CALIFORNIA

THE STATE OF CALIFORNIA OR ITS OFFICERS OR AGENTS SHALL NOT BE RESPONSIBLE FOR THE ACCURACY OR COMPLETENESS OF SCANNED COPIES OF THIS PLAN SHEET.

NOTES: (THIS SHEET ONLY)

1. WIRELESS MODEM. SECURE TO MOUNTING BACKPLATE INSIDE NEMA 4 ENCLOSURE.
2. LOAD/CHARGE CONTROLLER. SECURE TO MOUNTING BACKPLATE INSIDE NEMA 4 ENCLOSURE.
3. MVDS SURGE PROTECTION MODULE DIN-RAIL MOUNTED. SECURE TO MOUNTING BACKPLATE INSIDE NEMA 4 ENCLOSURE.
4. SERIAL TO BLUETOOTH RADIO MODULE DIN-RAIL MOUNTED. SECURE TO MOUNTING BACKPLATE INSIDE NEMA 4 ENCLOSURE.
5. Min DIMENSIONS 30" W x 24" H x 8" D NEMA 4 ENCLOSURE WITH HINGED DOOR, PADLOCK HASP AND INTERIOR PANEL FOR THE EQUIPMENT.

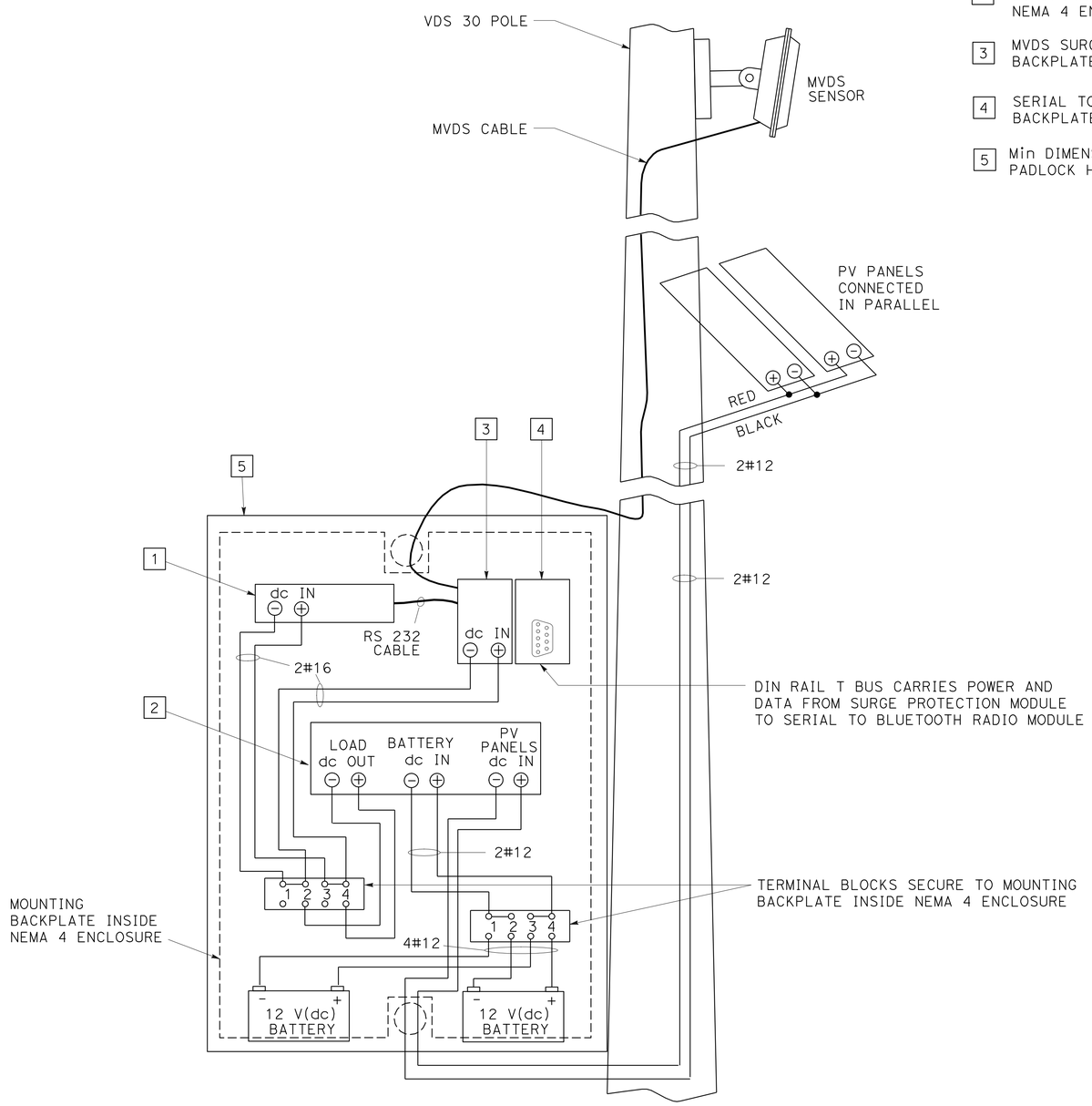

MVDS, PV AND NEMA ENCLOSURE WIRING DETAIL

(Loc 2, 3, 6, 8, 14, 16-21, 24, 30-32, 34)

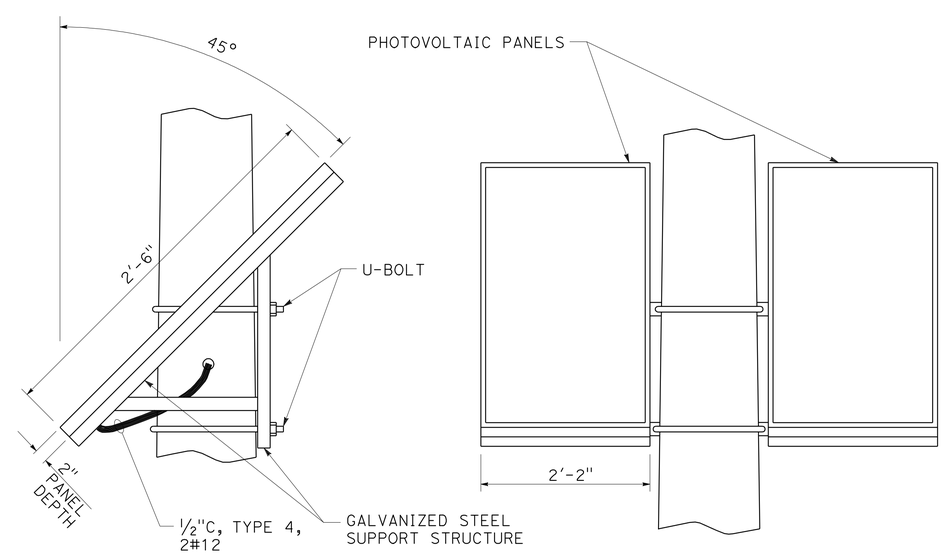

PHOTOVOLTAIC PANEL SUPPORT STRUCTURE

THIS PLAN IS ACCURATE FOR ELECTRICAL WORK ONLY.

MICROWAVE VEHICLE DETECTION SYSTEM
(ELECTRICAL DETAILS)

NO SCALE

E-24

STATE OF CALIFORNIA - DEPARTMENT OF TRANSPORTATION
Caltrans® ELECTRICAL DESIGN

FUNCTIONAL SUPERVISOR: ALI BAKHDOUD
CALCULATED-DESIGNED BY: XAVIER ALFARO
CHECKED BY: ANHHUY NGUYEN
REVISED BY
DATE REVISED

LAST REVISION 03-10-09 | DATE PLOTTED => 20-JAN-2010 | TIME PLOTTED => 05:52

Dist	COUNTY	ROUTE	POST MILES TOTAL PROJECT	SHEET No.	TOTAL SHEETS
05	Mon	1	72.4/R101.6	30	51

REGISTERED ELECTRICAL ENGINEER 03-16-09 DATE

5-4-09
PLANS APPROVAL DATE

REGISTERED PROFESSIONAL ENGINEER XAVIER IVANHOE ALFARO No. 17488 Exp. 6/30/09 ELECTRICAL STATE OF CALIFORNIA

THE STATE OF CALIFORNIA OR ITS OFFICERS OR AGENTS SHALL NOT BE RESPONSIBLE FOR THE ACCURACY OR COMPLETENESS OF SCANNED COPIES OF THIS PLAN SHEET.

NOTES: (THIS SHEET ONLY)

1. WIRELESS MODEM. SECURE TO MOUNTING BACKPLATE INSIDE NEMA 4 ENCLOSURE.
2. LOAD/CHARGE CONTROLLER. SECURE TO MOUNTING BACKPLATE INSIDE NEMA 4 ENCLOSURE.
3. MVDS SURGE PROTECTION MODULE DIN-RAIL MOUNTED. SECURE TO MOUNTING BACKPLATE INSIDE NEMA 4 ENCLOSURE.
4. SERIAL TO BLUETOOTH RADIO MODULE DIN-RAIL MOUNTED. SECURE TO MOUNTING BACKPLATE INSIDE NEMA 4 ENCLOSURE.
5. Min DIMENSIONS 30" W x 24" H x 8" D NEMA 4 ENCLOSURE WITH HINGED DOOR, PADLOCK HASP AND INTERIOR PANEL FOR THE EQUIPMENT.
6. POWER OVER ETHERNET INJECTOR.
7. OUTDOOR CAT 5E CABLE TO ACCESS POINT.

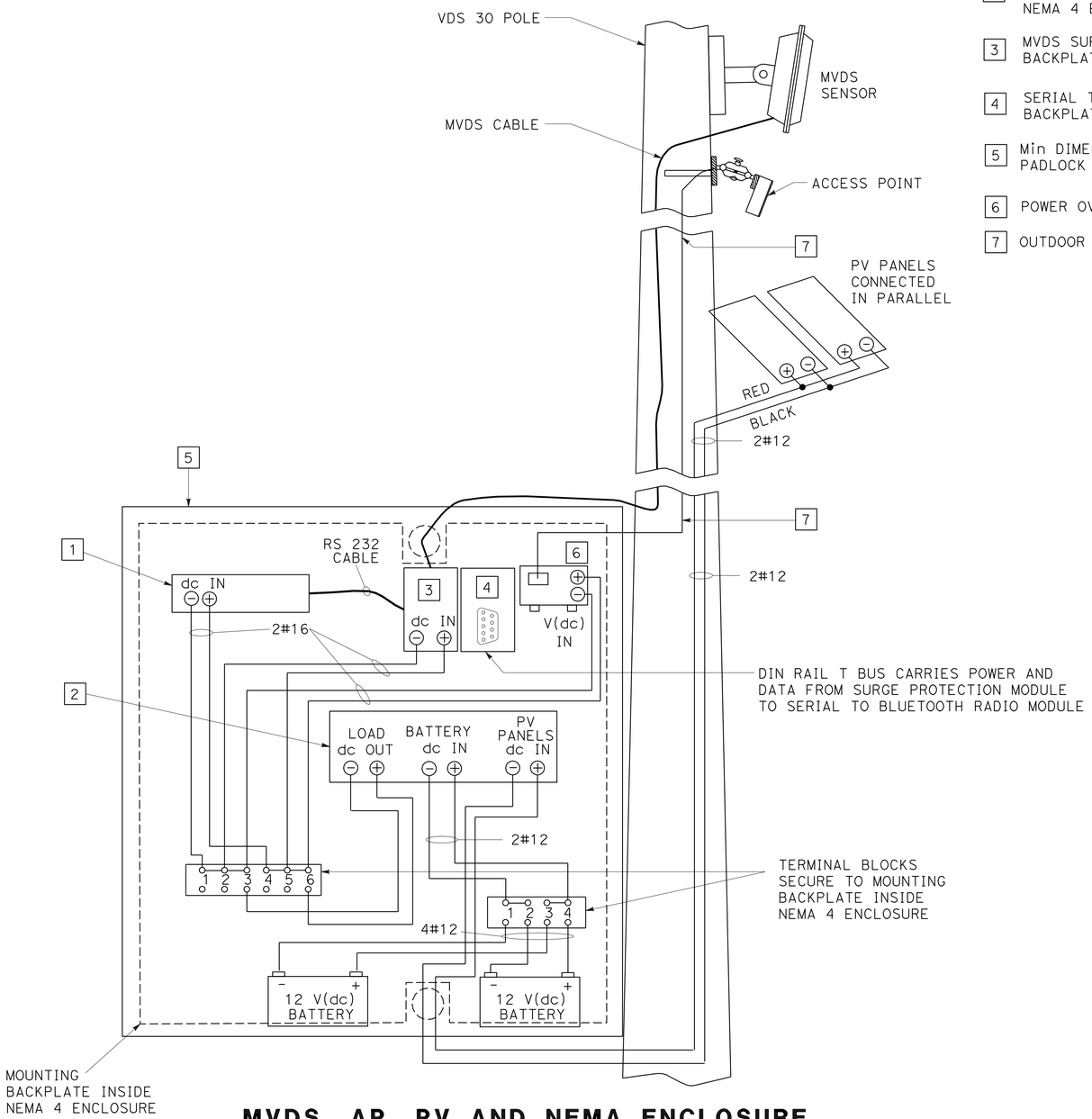

MVDS, AP, PV AND NEMA ENCLOSURE WIRING DETAIL

(Loc 11, 12, 15, 22, 23, 27, 28)

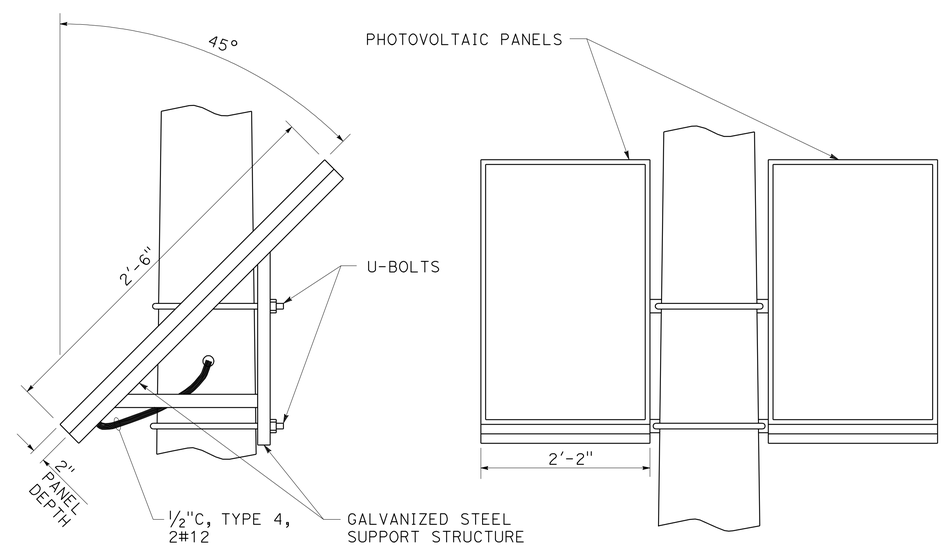

PHOTOVOLTAIC PANEL SUPPORT STRUCTURE

MICROWAVE VEHICLE DETECTION SYSTEM
(ELECTRICAL DETAILS)

NO SCALE

E-25

THIS PLAN IS ACCURATE FOR ELECTRICAL WORK ONLY.

STATE OF CALIFORNIA - DEPARTMENT OF TRANSPORTATION
Caltrans® ELECTRICAL DESIGN

FUNCTIONAL SUPERVISOR: ALI BAKHDOUD
CALCULATED-DESIGNED BY: XAVIER ALFARO
CHECKED BY: ANHHUY NGUYEN
REVISED BY
DATE REVISED

LAST REVISION 03-10-09
DATE PLOTTED => 20-JAN-2010
TIME PLOTTED => 05:52

Dist	COUNTY	ROUTE	POST MILES TOTAL PROJECT	SHEET No.	TOTAL SHEETS
05	Mon	1	72.4/R101.6	31	51

REGISTERED ELECTRICAL ENGINEER 03-16-09 DATE

5-4-09
PLANS APPROVAL DATE

REGISTERED PROFESSIONAL ENGINEER XAVIER IVANHOE ALFARO No. 17488 Exp. 6/30/09 ELECTRICAL STATE OF CALIFORNIA

THE STATE OF CALIFORNIA OR ITS OFFICERS OR AGENTS SHALL NOT BE RESPONSIBLE FOR THE ACCURACY OR COMPLETENESS OF SCANNED COPIES OF THIS PLAN SHEET.

NOTES: (THIS SHEET ONLY)

1. CCTV POWER CORD.
2. 3-PAIR SIC CABLE. USE 2 PAIR FOR EIA-422 PAN/TILT/ZOOM COMMUNICATION BETWEEN THE CCTV CAMERA AND VIDEO ENCODER. ONE PAIR WILL REMAIN AS A SPARE. COLORS MAY VARY.
3. OCC (OUTDOOR CAT5E CABLE). PLUG INTO THE RJ-45 DATA PORT IN THE CCTV DOME CAMERA ASSEMBLY.
4. RG-59U COAXIAL CABLE: CENTER CONDUCTOR: 20 AWG SOLID COPPER
   BRAID SHIELD: WOVEN COPPER BRAID WITH MINIMIM 80% COVERAGE (ALUMINUM FOIL SHIELDING OR FOIL WRAP IS NOT ACCEPTABLE)
   DIELECTRIC INSULATING MATERIAL: POLYURETHANE OR POLYETHYLENE
   OUTER JACKET: BLACK PVC
5. COAXIAL CABLE SURGE/LIGHTNING PROTECTOR: SURGE HANDLING: 5 kA; IMPEDANCE: 75 Ω
   INSERTION LOSS: <0.1 dB @ 500 MHz, CONNECTORS: TYPE F OR BNC
6. LOAD/CHARGE CONTROLLER.
7. DUPLEX BOX WITH CAT 5E RJ45 JACK WALLPLATE.
8. STATE-FURNISHED AND INSTALLED MATERIAL.
9. DC VOLTAGE CONVERTER:
   INPUT: 12 V(dc)
   OUTPUT: 24 V(dc), 100 W
   OPERATING TEMPERATURE RANGE: -25.5 °C TO +85 °C
10. Min DIMENSIONS 30" W x 24" H x 8" D NEMA 4 ENCLOSURE WITH HINGED DOOR, PADLOCK HASP AND INTERIOR PANEL FOR THE EQUIPMENT.

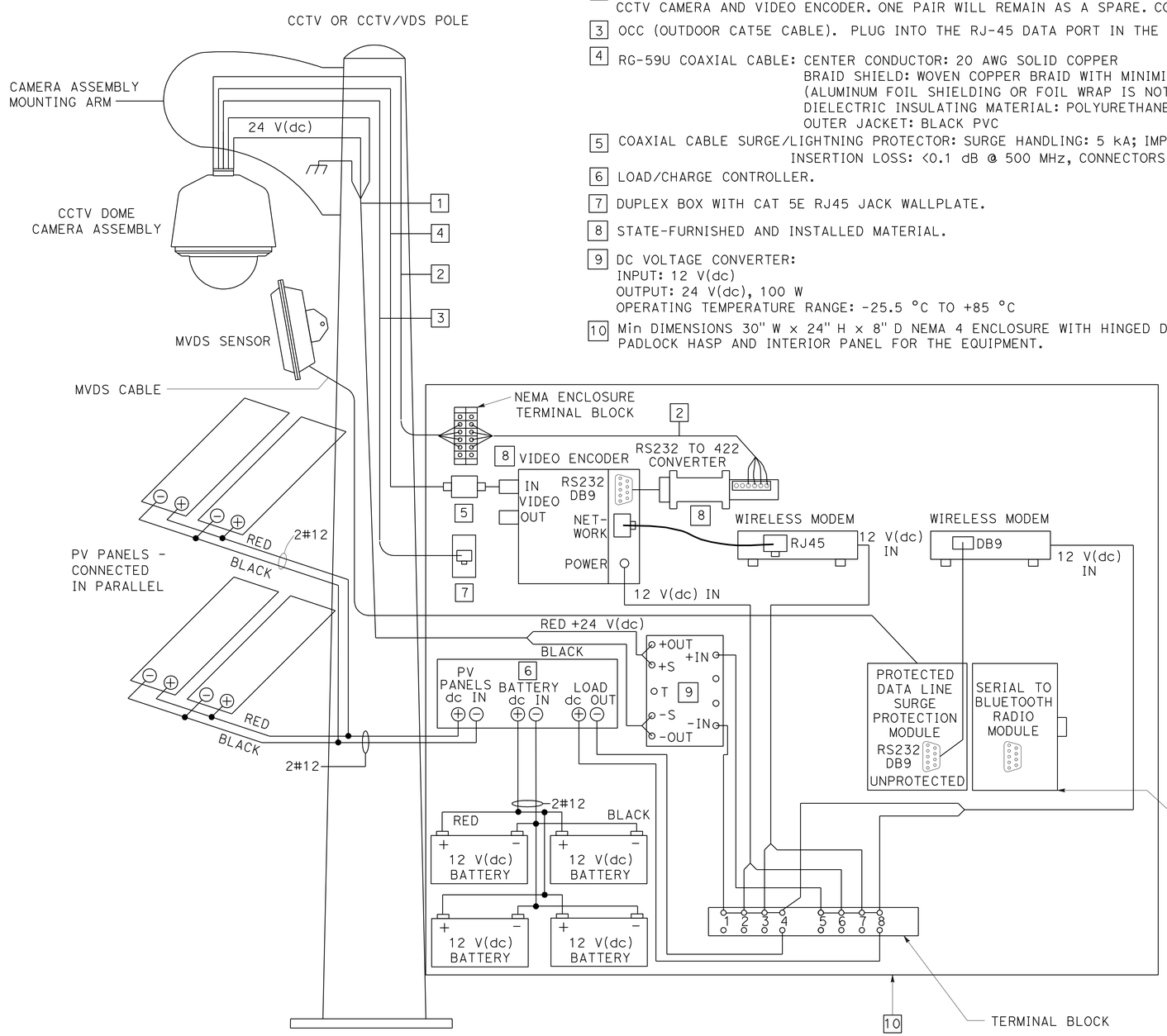

MVDS, CCTV, PV AND NEMA ENCLOSURE WIRING DETAIL
(Loc 25)

OCC
CAT 5E 10BASE-T
STANDARD PATCH CABLE

PLUG PIN No.		PLUG OR JACK PIN No.
1	ORANGE/WHITE	1
2	ORANGE	2
3	GREEN/WHITE	3
4	BLUE	4
5	BLUE/WHITE	5
6	GREEN	6
7	BROWN/WHITE	7
8	BROWN	8

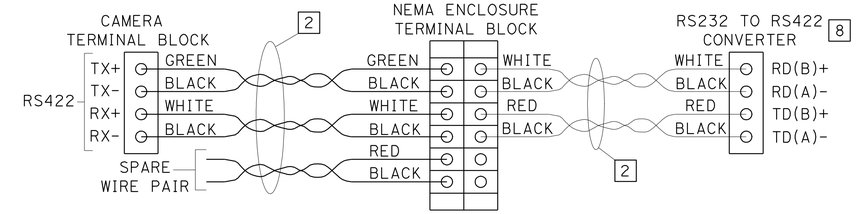

2 OR 3-PAIR RS-422 CABLE CONNECTIONS

DIN-RAIL
T BUS CARRIES POWER AND DATA FROM SURGE PROTECTION MODULE TO SERIAL TO BLUETOOTH MODULE

MICROWAVE VEHICLE DETECTION SYSTEM
CLOSED CIRCUIT TELEVISION SYSTEM
(ELECTRICAL DETAILS)

NO SCALE

E-26

THIS PLAN IS ACCURATE FOR ELECTRICAL WORK ONLY.

STATE OF CALIFORNIA - DEPARTMENT OF TRANSPORTATION
Caltrans® ELECTRICAL DESIGN

FUNCTIONAL SUPERVISOR: ALI BAKHDOUD
CALCULATED-DESIGNED BY: XAVIER ALFARO
CHECKED BY: ANHHUY NGUYEN
REVISED BY
DATE REVISED

LAST REVISION DATE PLOTTED => 20-JAN-2010
TIME PLOTTED => 06:52
03-10-09

Dist	COUNTY	ROUTE	POST MILES TOTAL PROJECT	SHEET No.	TOTAL SHEETS
05	Mon	1	72.4/R101.6	32	51

REGISTERED ELECTRICAL ENGINEER 03-16-09 DATE

5-4-09
PLANS APPROVAL DATE

REGISTERED PROFESSIONAL ENGINEER XAVIER IVANHOE ALFARO No. 17488 Exp. 6/30/09 ELECTRICAL STATE OF CALIFORNIA

THE STATE OF CALIFORNIA OR ITS OFFICERS OR AGENTS SHALL NOT BE RESPONSIBLE FOR THE ACCURACY OR COMPLETENESS OF SCANNED COPIES OF THIS PLAN SHEET.

NOTES: (THIS SHEET ONLY)

1. CCTV POWER CORD.
2. 3-PAIR SIC CABLE. USE 2 PAIR FOR EIA-422 PAN/TILT/ZOOM COMMUNICATION BETWEEN THE CCTV CAMERA AND VIDEO ENCODER. ONE PAIR WILL REMAIN AS A SPARE. COLORS MAY VARY.
3. OCC (OUTDOOR CAT5E CABLE). PLUG INTO THE RJ-45 DATA PORT IN THE CCTV DOME CAMERA ASSEMBLY.
4. RG-59U COAXIAL CABLE: CENTER CONDUCTOR: 20 AWG SOLID COPPER
   BRAID SHIELD: WOVEN COPPER BRAID WITH MINIMIM 80% COVERAGE (ALUMINUM FOIL SHIELDING OR FOIL WRAP IS NOT ACCEPTABLE)
   DIELECTRIC INSULATING MATERIAL: POLYURETHANE OR POLYETHYLENE
   OUTER JACKET: BLACK PVC
5. COAXIAL CABLE SURGE/LIGHTNING PROTECTOR: SURGE HANDLING: 5 kA; IMPEDANCE: 75 Ω
   INSERTION LOSS: <0.1 dB @ 500 MHz, CONNECTORS: TYPE F OR BNC
6. LOAD/CHARGE CONTROLLER.
7. ACCESS POINT HAS INTERNAL CELLULAR MODEM WITH ETHERNET ROUTER.
8. DUPLEX BOX WITH CAT 5E RJ45 JACK WALLPLATE.
9. STATE-FURNISHED AND INSTALLED MATERIAL.
10. DC VOLTAGE CONVERTER:
    INPUT: 12 V(dc)
    OUTPUT: 24 V(dc), 100 W
    OPERATING TEMPERATURE RANGE: -25.5 °C TO +85 °C
11. Min DIMENSIONS 30" W x 24" H x 8" D NEMA 4 ENCLOSURE WITH HINGED DOOR, PADLOCK HASP AND INTERIOR PANEL FOR THE EQUIPMENT.

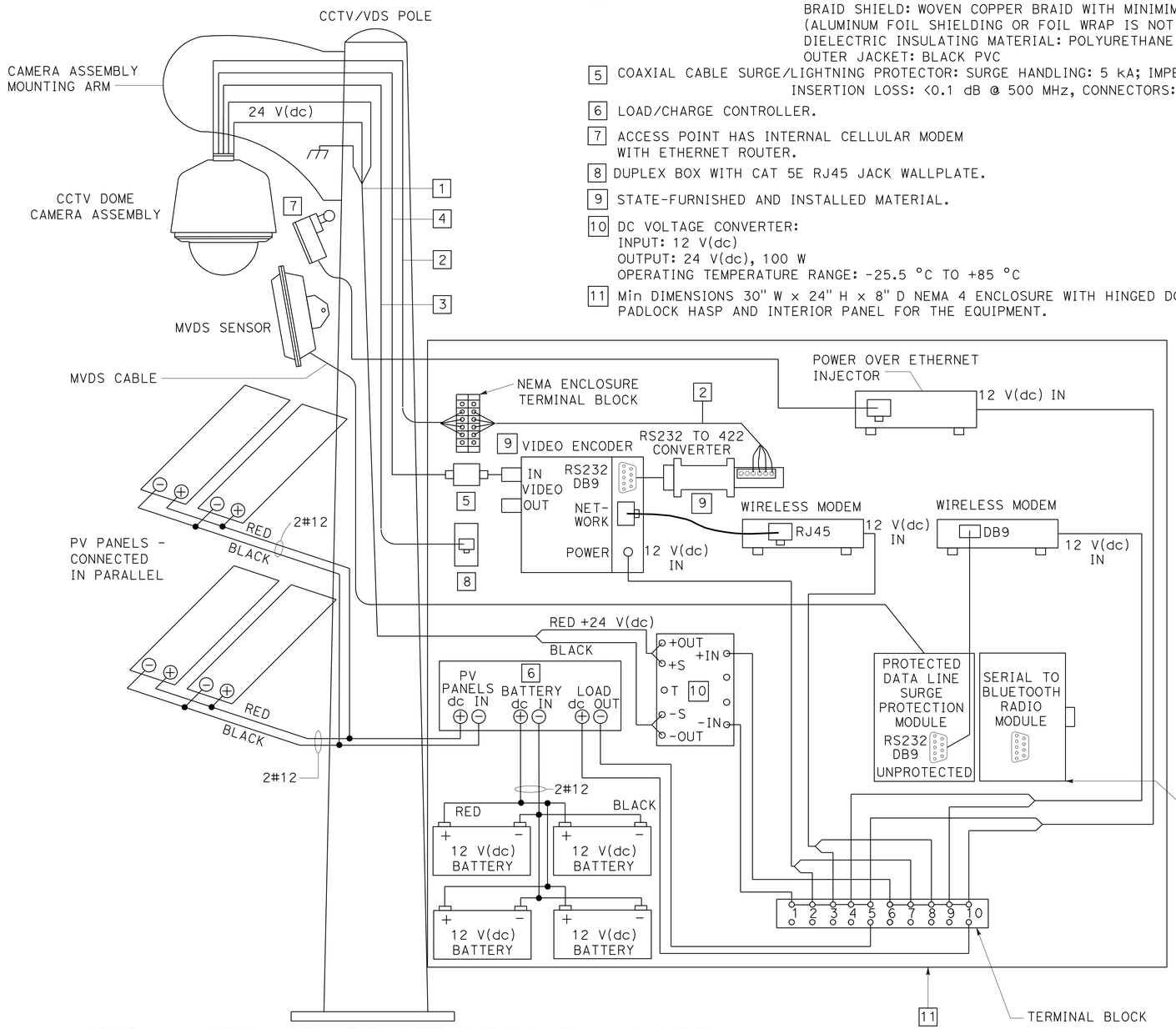

OCC
CAT 5E 10BASE-T
STANDARD PATCH CABLE

PLUG PIN No.		PLUG OR JACK PIN No.
1	ORANGE/WHITE	1
2	ORANGE	2
3	GREEN/WHITE	3
4	BLUE	4
5	BLUE/WHITE	5
6	GREEN	6
7	BROWN/WHITE	7
8	BROWN	8

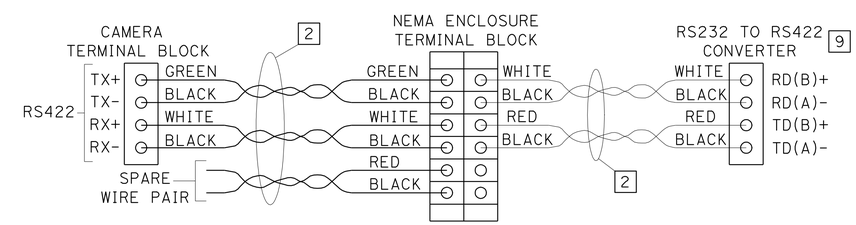

2 OR 3-PAIR RS-422 CABLE CONNECTIONS

MVDS, CCTV, AP, PV AND NEMA ENCLOSURE WIRING DETAIL

(Loc 5, 10, 13, 26, 29, 33)

THIS PLAN IS ACCURATE FOR ELECTRICAL WORK ONLY.

WIRELESS VEHICLE DETECTION SYSTEM
MICROWAVE VEHICLE DETECTION SYSTEM
CLOSED CIRCUIT TELEVISION SYSTEM
(ELECTRICAL DETAILS)

NO SCALE

E-27

REVISED BY | DATE REVISED
ANHHUY NGUYEN | XAVIER ALFARO
CALCULATED-DESIGNED BY | CHECKED BY
FUNCTIONAL SUPERVISOR: ALI BAKHDOUD
STATE OF CALIFORNIA - DEPARTMENT OF TRANSPORTATION
Caltrans ELECTRICAL DESIGN

LAST REVISION 03-13-09 | DATE PLOTTED => 20-JAN-2010 | TIME PLOTTED => 05:52

DIST	COUNTY	ROUTE	POST MILES TOTAL PROJECT	SHEET No	TOTAL SHEETS
05	Mon	1	72.4/R101.6	33	51

REGISTERED CIVIL ENGINEER 8/4/08 DATE

5-4-09
PLANS APPROVAL DATE

REGISTERED PROFESSIONAL ENGINEER ANDREW BUI No. C63560 Exp. 9/30/10 CIVIL STATE OF CALIFORNIA

The State of California or its officers or agents shall not be responsible for the accuracy or completeness of electronic copies of this plan sheet.

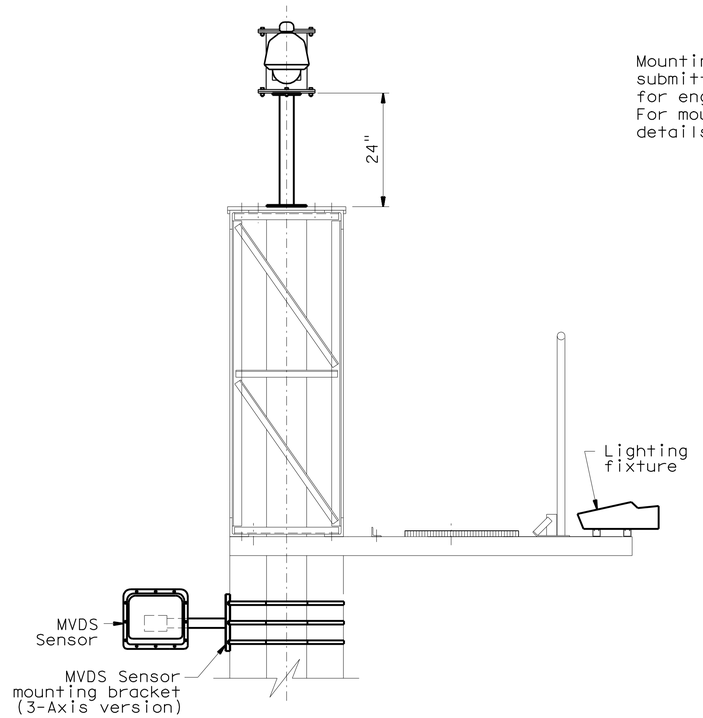

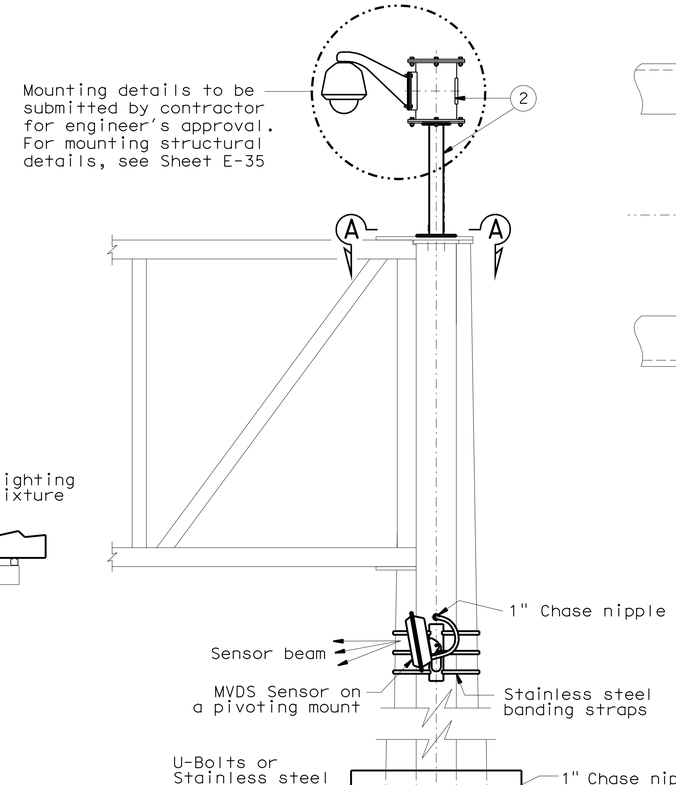

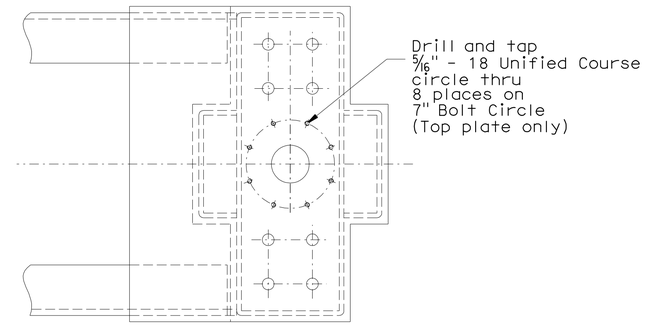

SECTION A-A

SCALE: 2"=1'

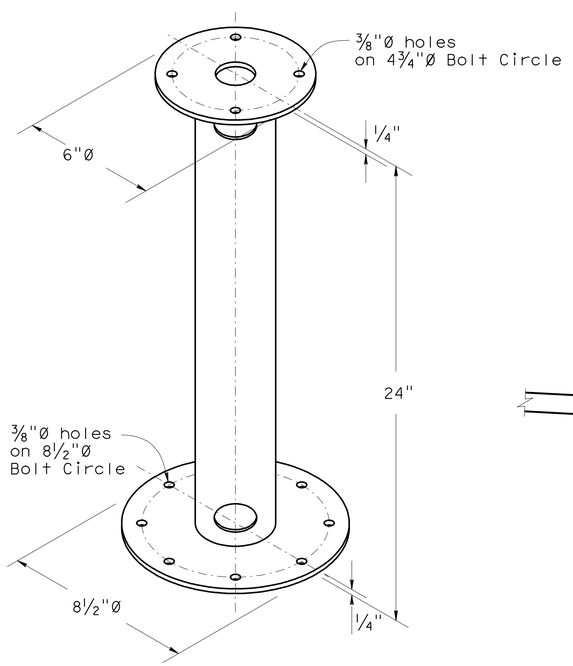

CAMERA MOUNT DETAIL

SCALE: 1 1/2"= 1'

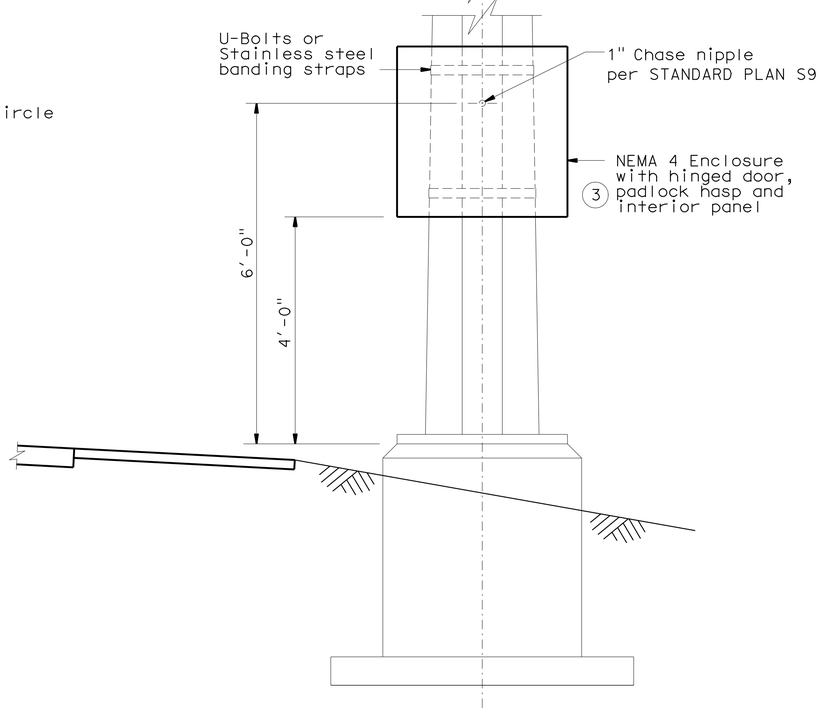

Loc 9

SCALE: 3/4"= 1'

SPECIFICATIONS:

Design : AASHTO Standard Specifications for Structural Support for Highway Signs, Luminaries and Traffic Signals dated 2001.

LOADING:

Wind Loadings : 100 mph.

UNIT STRESSES:

Structural Steel : fy = 48,000 psi tapered steel tube.
fy = 36,000 psi unless otherwise noted.

Anchor bolts : A307.

Reinforcing Concrete : f'c = 3,600 psi.
f'y = 60,000 psi.

NOTES:

1 Drill and Tap 8 holes in top mounting plate. Bolt the camera mount to top plate. Bolt Camera to top plate of camera mount.

2 See camera mount detail on this sheet.

3 Nema enclosure, Size 24"W x 24"H x 12"D.

CLOSED CIRCUIT TELEVISION SYSTEM
WIRELESS VEHICLE DETECTION SYSTEM
MICROWAVE VEHICLE DETECTION SYSTEM
(ON EXISTING BOX BEAM OH SIGN STRUCTURE)
(MOUNTING DETAILS)

E-28

CALCULATED/ DESIGNED BY	E LOPEZ	DATE 7/24/08	DETAILS A R DUDSAK
CHECKED BY	A BUI	X	QUANTITIES X

PROJECT ENGINEER ANDREW BUI

STATE OF CALIFORNIA - DEPARTMENT OF TRANSPORTATION
Caltrans SPECIAL DESIGNS BRANCH

LAST REVISION 3-12-09 DATE PLOTTED => 20-JAN-2010 TIME PLOTTED => 05:52

ORIGINAL SCALE IN INCHES FOR REDUCED PLANS 0 1 2 3

USERNAME => trmikesl
DGN FILE =>spec_des_br_proj/2008sd/05-0N2601/05_0n2601_e28.dgn

CU 06391 EA 0N2601

DIST	COUNTY	ROUTE	POST MILES TOTAL PROJECT	SHEET No	TOTAL SHEETS
05	Mon	1	72.4/R101.6	34	51

REGISTERED CIVIL ENGINEER 2/23/09 DATE

5-4-09
PLANS APPROVAL DATE

REGISTERED PROFESSIONAL ENGINEER ANDREW BUI No. C63560 Exp. 9/30/10 CIVIL STATE OF CALIFORNIA

The State of California or its officers or agents shall not be responsible for the accuracy or completeness of electronic copies of this plan sheet.

TABLE A

Pole Type	Pole Data: Height "h"	Min OD: BASE	Min OD: TOP	Thickness	Base Plate Data: "C"	Thickness	Anchor Bolts: SIZE	Anchor Bolts: BC = BOLT CIRCLE	"d" 2'-0" Ø CIDH Pile: LEVEL GROUND	"d" 2'-0" Ø CIDH Pile: SLOPING GROUND	Structural Steel LBS plus 3.5% Galvanizing
VDS 30	30'	8"	3⅞"	0.1793"	1'-0"	1"	1" x 3'-0 x 4"	11"	12'-0"	12'-0"	475

TABLE B

Attachment	Mounting Height
Enclosure	4'-0" Max bottom Clr
Photovoltaic	13' Max
MVDS	29' Max

TABLE C

Spread Footing		
Ground	Footing Size Length x Width x Depth	Reinforcement Top & Bottom
Level	6'-0" x 6'-0" x 1'-6"	7 - #4
Sloping	7'-0" x 7'-0" x 1'-6"	8 - #4

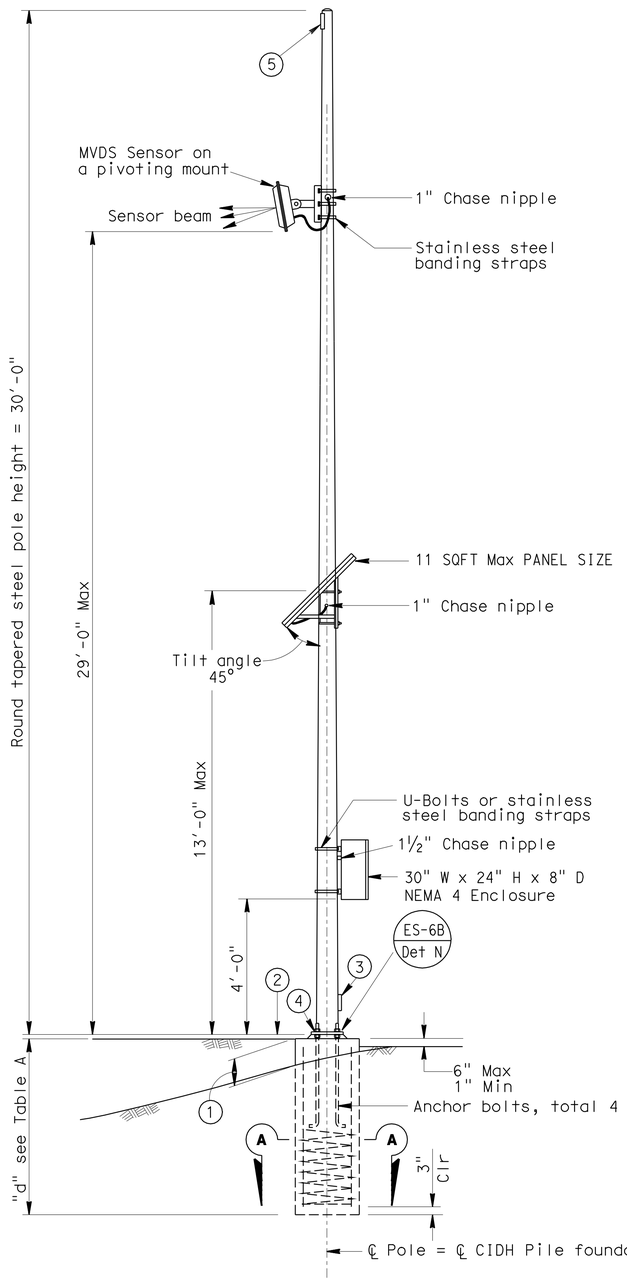

ELEVATION VDS 30

(Location 2,3,6,8,14,16-21,24,30-32,34)

NO SCALE

NOTE:
THE CONTRACTOR SHALL VERIFY ALL CONTROLLING FIELD DIMENSIONS BEFORE ORDERING OR FABRICATING ANY MATERIAL.

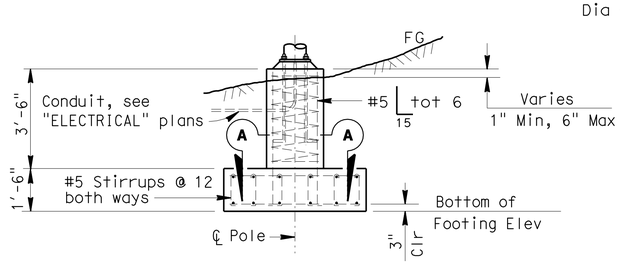

ALTERNATIVE FOOTING ELEVATION

(See TABLE C)

NO SCALE

1. 1'-3" Max for sloped finished grade
2. Bottom of base plate
3. Handhole (ES-7M)
4. Fatigue resistant weld (ES-7M Det F)
5. Install cover plate and gasket over luminaire arm attachment

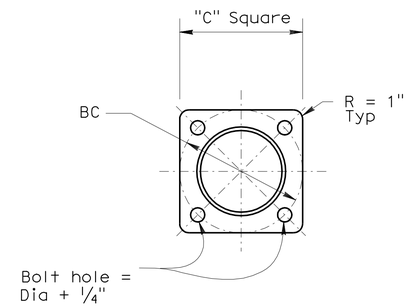

BASE PLATE

SCALE: 1½"= 1'

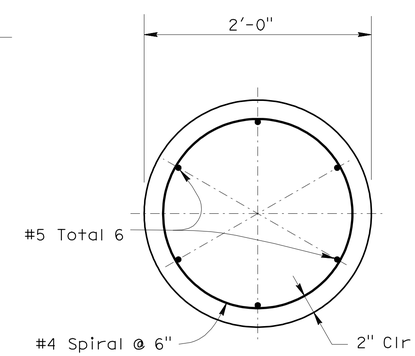

SECTION A-A

SCALE: 1½"= 1'

GENERAL NOTES:

SPECIFICATIONS

Design : AASHTO Standard specifications for structural supports for highway signs, luminaires and traffic signals dated 2001.

LOADING

Wind Loadings : 100 mph

UNIT STRESSES

Structural Steel : fy = 48,000 psi tapered steel tube
fy = 36,000 psi unless otherwise noted.

Anchor bolts = A307

Reinforced Concrete : f'c = 3,600 psi
fy = 60,000 psi

NOTES:

1. All steel shall be galvanized after fabrication.
2. During pole erection the post shall be raked as necessary with the use of leveling nuts to provide a plumb pole axis.
3. The foundation shall be treated as level ground condition if the slope inclination is flatter than 2H:1V.
4. For devices mounted and mounting heights, see TABLE B.

MICROWAVE VEHICLE DETECTION SYSTEM (POLE DETAILS)

E-29

STATE OF CALIFORNIA - DEPARTMENT OF TRANSPORTATION
Caltrans SPECIAL DESIGNS BRANCH

PROJECT ENGINEER ANDREW BUI | CALCULATED/DESIGNED BY E LOPEZ | CHECKED BY A BUI | DATE 6-23-08 6-23-08 | DETAILS D W JUSTICE JR | QUANTITIES E LOPEZ

LAST REVISION 3-12-09 | DATE PLOTTED => 20-JAN-2010 | TIME PLOTTED => 05:53

ORIGINAL SCALE IN INCHES FOR REDUCED PLANS 0 1 2 3

USERNAME => trmikesl
DGN FILE => spec_des_br_proj/2008sd/05-0n2601/05_0n2601_e29.dgn

CU 06391 | EA 0N2601

DIST	COUNTY	ROUTE	POST MILES TOTAL PROJECT	SHEET No	TOTAL SHEETS
05	Mon	1	72.4/R101.6	35	51

REGISTERED CIVIL ENGINEER 2/23/09 DATE

5-4-09
PLANS APPROVAL DATE

REGISTERED PROFESSIONAL ENGINEER ANDREW BUI No. C63560 Exp. 9/30/10 CIVIL STATE OF CALIFORNIA

The State of California or its officers or agents shall not be responsible for the accuracy or completeness of electronic copies of this plan sheet.

TABLE A

Pole Type	Pole Data: Height "h"	Min OD: BASE	Min OD: TOP	Thickness	Base Plate Data: "C"	Thickness	Anchor Bolts: SIZE	Anchor Bolts: BC = BOLT CIRCLE	"d" 2'-0" Ø CIDH Pile: LEVEL GROUND	"d" 2'-0" Ø CIDH Pile: SLOPING GROUND	Structural Steel LBS plus 3.5% Galvanizing
VDS 30	30'	8"	3⅞"	0.1793"	1'-0"	1"	1" x 3'-0 x 4"	11"	12'-0"	12'-0"	475

TABLE B

Attachment	Mounting Height
Enclosure	4'-0" Max bottom Clr
Photovoltaic	13' Max
MVDS	27' Max
AP	25' Max

TABLE C

Spread Footing		
Ground	Footing Size Length x Width x Depth	Reinforcement Top & Bottom
Level	6'-0" x 6'-0" x 1'-6"	7 - #4
Sloping	7'-0" x 7'-0" x 1'-6"	8 - #4

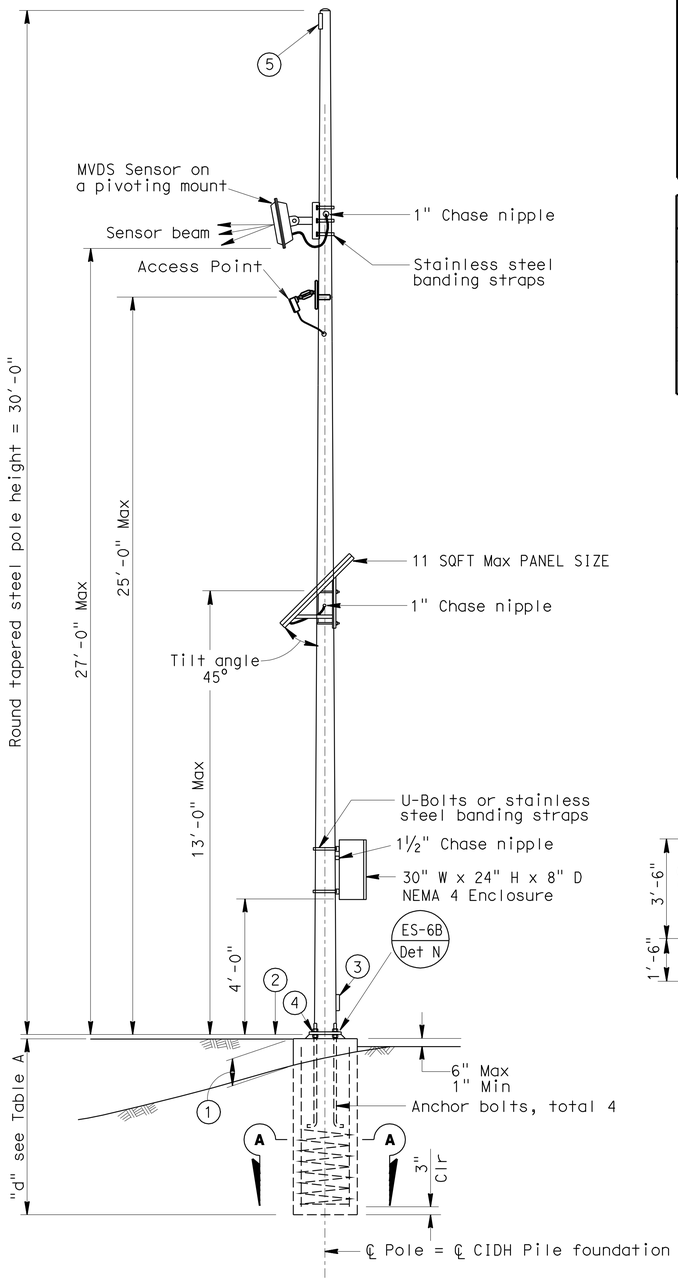

ELEVATION
VDS 30

(Location 11,12,15,22,23,27,28)
NO SCALE

NOTE:
THE CONTRACTOR SHALL VERIFY ALL CONTROLLING FIELD DIMENSIONS BEFORE ORDERING OR FABRICATING ANY MATERIAL.

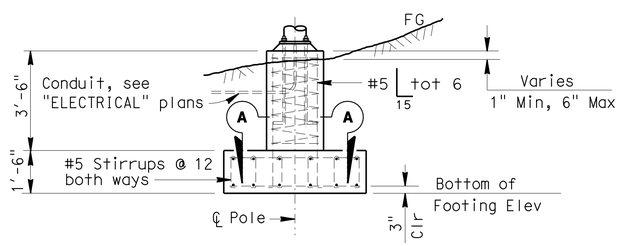

ALTERNATIVE FOOTING ELEVATION

(See Table C)
NO SCALE

1. 1'-3" Max for sloped finished grade
2. Bottom of base plate
3. Handhole (ES-7M)
4. Fatigue resistant weld (ES-7M Det F)
5. Install cover plate and gasket over luminaire arm attachment

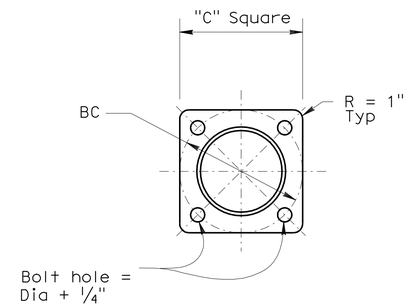

BASE PLATE

SCALE: 1½"= 1'

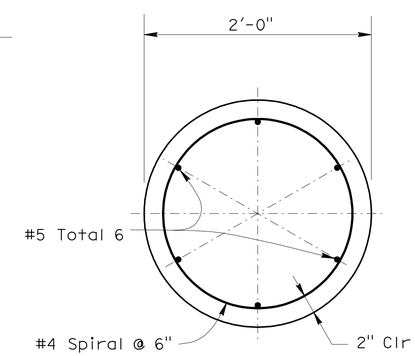

SECTION A-A

SCALE: 1½"= 1'

GENERAL NOTES:

SPECIFICATIONS

Design : AASHTO Standard specifications for structural supports for highway signs, luminaires and traffic signals dated 2001.

LOADING

Wind Loadings : 100 mph

UNIT STRESSES

Structural Steel : fy = 48,000 psi tapered steel tube
fy = 36,000 psi unless otherwise noted.

Anchor bolts = A307

Reinforced Concrete : f'c = 3,600 psi
fy = 60,000 psi

NOTES:

1. All steel shall be galvanized after fabrication.
2. During pole erection the post shall be raked as necessary with the use of leveling nuts to provide a plumb pole axis.
3. The foundation shall be treated as level ground condition if the slope inclination is flatter than 2H:1V.
4. For devices mounted and mounting heights, see TABLE B.

WIRELESS VEHICLE DETECTION SYSTEM
MICROWAVE VEHICLE DETECTION SYSTEM
(POLE DETAILS)

E-30

STATE OF CALIFORNIA - DEPARTMENT OF TRANSPORTATION
Caltrans
SPECIAL DESIGNS BRANCH

PROJECT ENGINEER ANDREW BUI
CALCULATED/DESIGNED BY E LOPEZ
CHECKED BY A BUI
DATE 6-23-08 6-23-08
DETAILS D W JUSTICE JR
QUANTITIES E LOPEZ

LAST REVISION 3-12-09
DATE PLOTTED => 20-JAN-2010
TIME PLOTTED => 05:53

ORIGINAL SCALE IN INCHES FOR REDUCED PLANS 0 1 2 3

USERNAME => trmikesl
DGN FILE => spec_des_br_proj/2008sd/05-0n2601/05_0n2601_e30.dgn

CU 06391
EA 0N2601

DIST	COUNTY	ROUTE	POST MILES TOTAL PROJECT	SHEET No	TOTAL SHEETS
05	Mon	1	72.4/R101.6	36	51

REGISTERED CIVIL ENGINEER 2/23/09 DATE

5-4-09
PLANS APPROVAL DATE

REGISTERED PROFESSIONAL ENGINEER ANDREW BUI No. C63560 Exp. 9/30/10 CIVIL STATE OF CALIFORNIA

The State of California or its officers or agents shall not be responsible for the accuracy or completeness of electronic copies of this plan sheet.

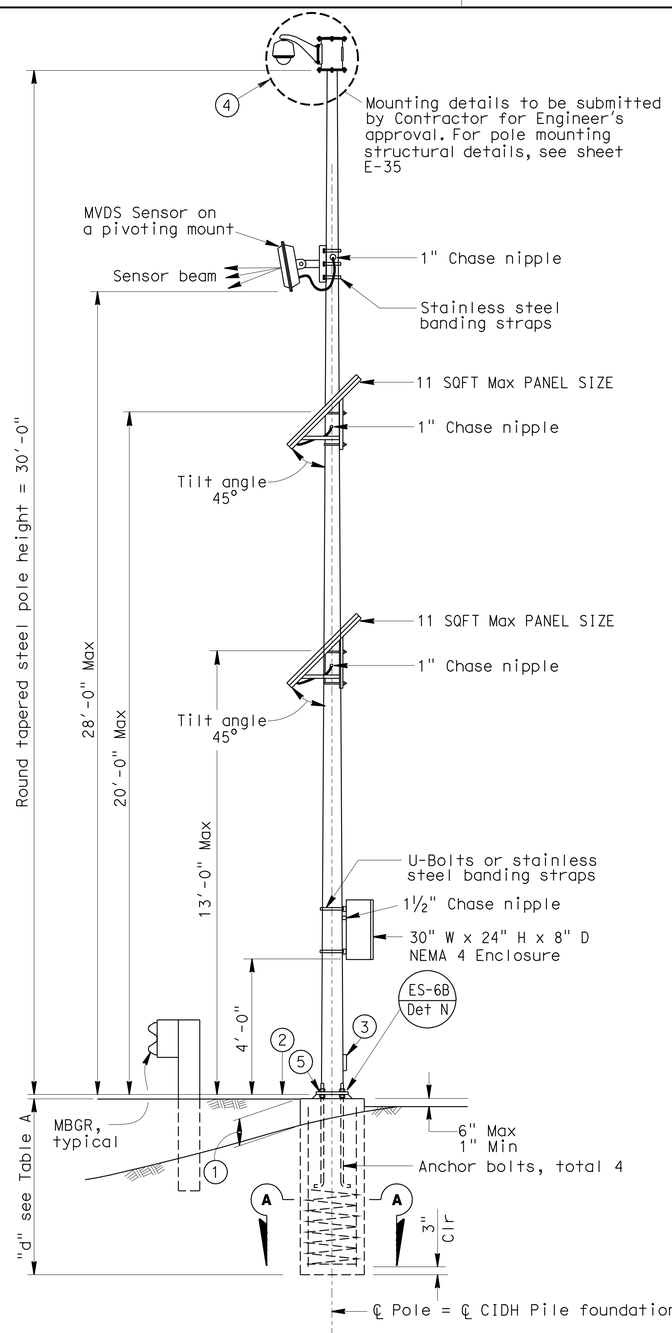

ELEVATION
CCTV 30
(Location 25)
NO SCALE

1. 1'-3" Max for sloped finished grade
2. Bottom of base plate
3. Handhole (ES-7M)
4. Camera with mounting arm
5. Fatigue resistant weld (ES-7M Det F)

NOTE:
THE CONTRACTOR SHALL VERIFY ALL CONTROLLING FIELD DIMENSIONS BEFORE ORDERING OR FABRICATING ANY MATERIAL.

TABLE A

Pole Type	Pole Data: Height "h"	Pole Data: Min OD BASE	Pole Data: Min OD TOP	Pole Data: Thickness	Base Plate Data: "C"	Base Plate Data: Thickness	Base Plate Data: Anchor Bolts SIZE	Base Plate Data: Anchor Bolts BC = BOLT CIRCLE	"d" 2'-0" Ø CIDH Pile: LEVEL GROUND	"d" 2'-0" Ø CIDH Pile: SLOPING GROUND	Structural Steel LBS plus 3.5% Galvanizing
CCTV 30	30'	8"	3⅞"	0.1793"	1'-0"	1"	1" x 3'-0 x 4"	11"	12'-0"	12'-0"	475

TABLE B

Attachment	Mounting Height
Enclosure	4'-0" Max bottom Clr
Photovoltaic	13'- 20'
MVDS	28' Max

TABLE C

Spread Footing		
Ground	Footing Size Length x Width x Depth	Reinforcement Top & Bottom
Level	6'-0" x 6'-0" x 1'-6"	7 - #4
Sloping	7'-0" x 7'-0" x 1'-6"	8 - #4

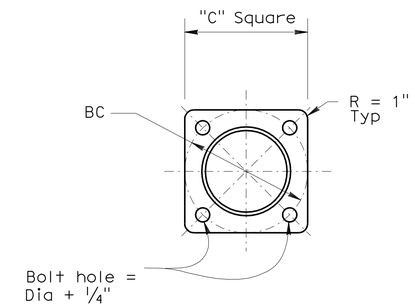

BASE PLATE
SCALE: 1½"= 1'

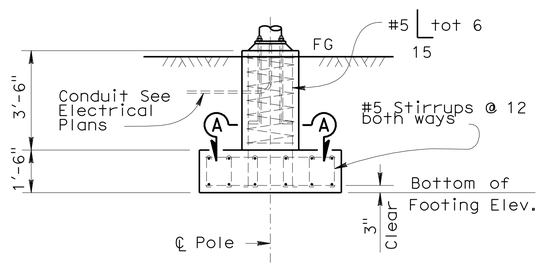

ALTERNATIVE FOOTING ELEVATION
(See TABLE C)
NO SCALE

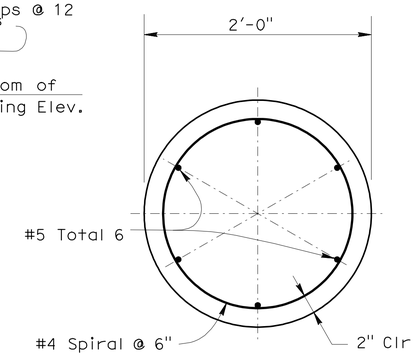

SECTION A-A
SCALE: 1½"= 1'

GENERAL NOTES:

SPECIFICATIONS

Design : AASHTO Standard specifications for structural supports for highway signs, luminaires and traffic signals dated 2001.

LOADING

Wind Loadings : 100 mph

UNIT STRESSES

Structural Steel : fy = 48,000 psi tapered steel tube
fy = 36,000 psi unless otherwise noted.

Anchor bolts = A307

Reinforced Concrete : f'c = 3,600 psi
fy = 60,000 psi

NOTES:

1. All steel shall be galvanized after fabrication.
2. During pole erection the post shall be raked as necessary with the use of leveling nuts to provide a plumb pole axis.
3. The foundation shall be treated as level ground condition if the slope inclination is flatter than 2H:1V.
4. For devices mounted and mounting heights, see TABLE B.

CLOSED CIRCUIT TELEVISION SYSTEM
MICROWAVE VEHICLE DETECTION SYSTEM
(POLE DETAILS)

E-31

STATE OF CALIFORNIA - DEPARTMENT OF TRANSPORTATION
Caltrans
SPECIAL DESIGNS BRANCH

PROJECT ENGINEER ANDREW BUI
CALCULATED/DESIGNED BY E LOPEZ
CHECKED BY A BUI
DETAILS D W JUSTICE Jr
QUANTITIES E LOPEZ
DATE 6-20-08 6-20-08

LAST REVISION 3-12-09
DATE PLOTTED => 20-JAN-2010
TIME PLOTTED => 05:53

ORIGINAL SCALE IN INCHES FOR REDUCED PLANS 0 1 2 3

USERNAME => trmikesl
DGN FILE => spec_des_br_proj/2008sd/05-0n2601/05_0n2601_e31.dgn

CU 06391
EA 0N2601

DIST	COUNTY	ROUTE	POST MILES TOTAL PROJECT	SHEET No	TOTAL SHEETS
05	Mon	1	72.4/R101.6	37	51

REGISTERED CIVIL ENGINEER 2/23/09 DATE

5-4-09
PLANS APPROVAL DATE

REGISTERED PROFESSIONAL ENGINEER ANDREW BUI No. C63560 Exp. 9/30/10 CIVIL STATE OF CALIFORNIA

The State of California or its officers or agents shall not be responsible for the accuracy or completeness of electronic copies of this plan sheet.

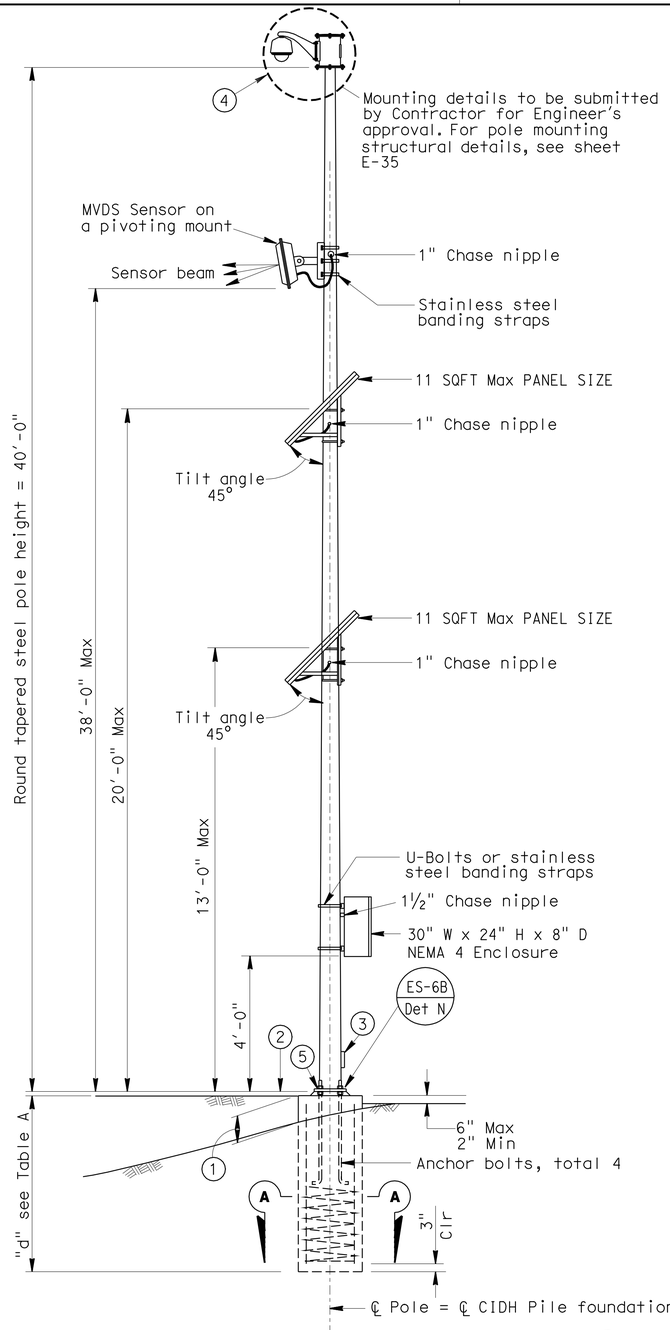

ELEVATION
CCTV/VDS 40
(Location 7)
NO SCALE

TABLE A

Pole Type	Pole Data: Height "h"	Pole Data: Min OD BASE	Pole Data: Min OD TOP	Pole Data: Thickness	Base Plate Data: "C"	Base Plate Data: Thickness	Base Plate Data: Anchor Bolts SIZE	Base Plate Data: Anchor Bolts BC = BOLT CIRCLE	"d" 2'-0" Ø CIDH Pile: LEVEL GROUND	"d" 2'-0" Ø CIDH Pile: SLOPING GROUND	Structural Steel LBS plus 3.5% Galvanizing
CCTV/VDS 40	40'	9⅜"	3⅞"	0.1793"	1'-1"	1"	1¼" x 3'-0 x 4"	1'-1"	12'-0"	12'-0"	650

TABLE B

Attachment	Mounting Height
Enclosure	4'-0" Max bottom Clr
Photovoltaic	13'- 20'
MVDS	38' Max

TABLE C

Spread Footing		
Ground	Footing Size Length x Width x Depth	Reinforcement Top & Bottom
Level	6'-0" x 6'-0" x 1'-6"	7 - #4
Sloping	7'-0" x 7'-0" x 1'-6"	8 - #4

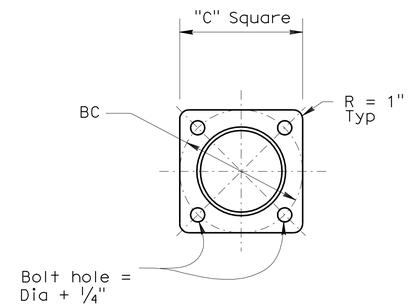

BASE PLATE
SCALE: 1½"= 1'

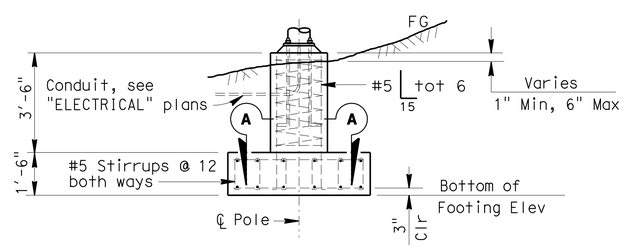

ALTERNATIVE FOOTING ELEVATION
(See TABLE C)
NO SCALE

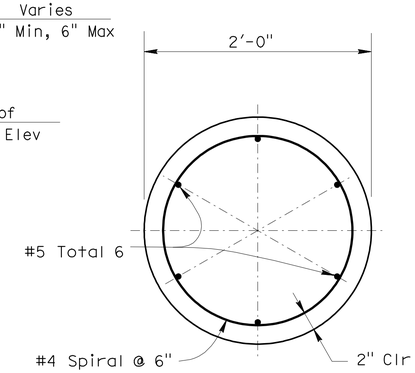

SECTION A-A
SCALE: 1½"= 1'

GENERAL NOTES:

SPECIFICATIONS

Design : AASHTO Standard specifications for structural supports for highway signs, luminaires and traffic signals dated 2001.

LOADING

Wind Loadings : 100 mph

UNIT STRESSES

Structural Steel : fy = 48,000 psi tapered steel tube
fy = 36,000 psi unless otherwise noted.

Anchor bolts = A307

Reinforced Concrete : f'c = 3,600 psi
fy = 60,000 psi

NOTES:

1. All steel shall be galvanized after fabrication.
2. During pole erection the post shall be raked as necessary with the use of leveling nuts to provide a plumb pole axis.
3. The foundation shall be treated as level ground condition if the slope inclination is flatter than 2H:1V.
4. For devices mounted and mounting heights, see TABLE B.

(1) 1'-3" Max for sloped finished grade
(2) Bottom of base plate
(3) Handhole (ES-7M)
(4) Camera with mounting arm
(5) Fatigue resistant weld (ES-7M Det F)

NOTE:
THE CONTRACTOR SHALL VERIFY ALL CONTROLLING FIELD DIMENSIONS BEFORE ORDERING OR FABRICATING ANY MATERIAL.

CLOSED CIRCUIT TELEVISION SYSTEM
MICROWAVE VEHICLE DETECTION SYSTEM
(POLE DETAILS)

E-32

CALCULATED/DESIGNED BY	E LOPEZ
CHECKED BY	A BUI
DETAILS	D W JUSTICE JR
QUANTITIES	E LOPEZ
DATE	6-23-08
	6-23-08
PROJECT ENGINEER	ANDREW BUI

STATE OF CALIFORNIA - DEPARTMENT OF TRANSPORTATION
Caltrans
SPECIAL DESIGNS BRANCH

LAST REVISION 3-12-09
DATE PLOTTED => 20-JAN-2010
TIME PLOTTED => 05:54

ORIGINAL SCALE IN INCHES FOR REDUCED PLANS 0 1 2 3

USERNAME => trmikesl
DGN FILE => spec_des_br_proj/2008sd/05-0n2601/05_0n2601_e32.dgn

CU 06391
EA 0N2601

DIST	COUNTY	ROUTE	POST MILES TOTAL PROJECT	SHEET No	TOTAL SHEETS
05	Mon	1	72.4/R101.6	38	51

REGISTERED CIVIL ENGINEER 2/23/09 DATE

5-4-09
PLANS APPROVAL DATE

REGISTERED PROFESSIONAL ENGINEER ANDREW BUI No. C63560 Exp. 9/30/10 CIVIL STATE OF CALIFORNIA

The State of California or its officers or agents shall not be responsible for the accuracy or completeness of electronic copies of this plan sheet.

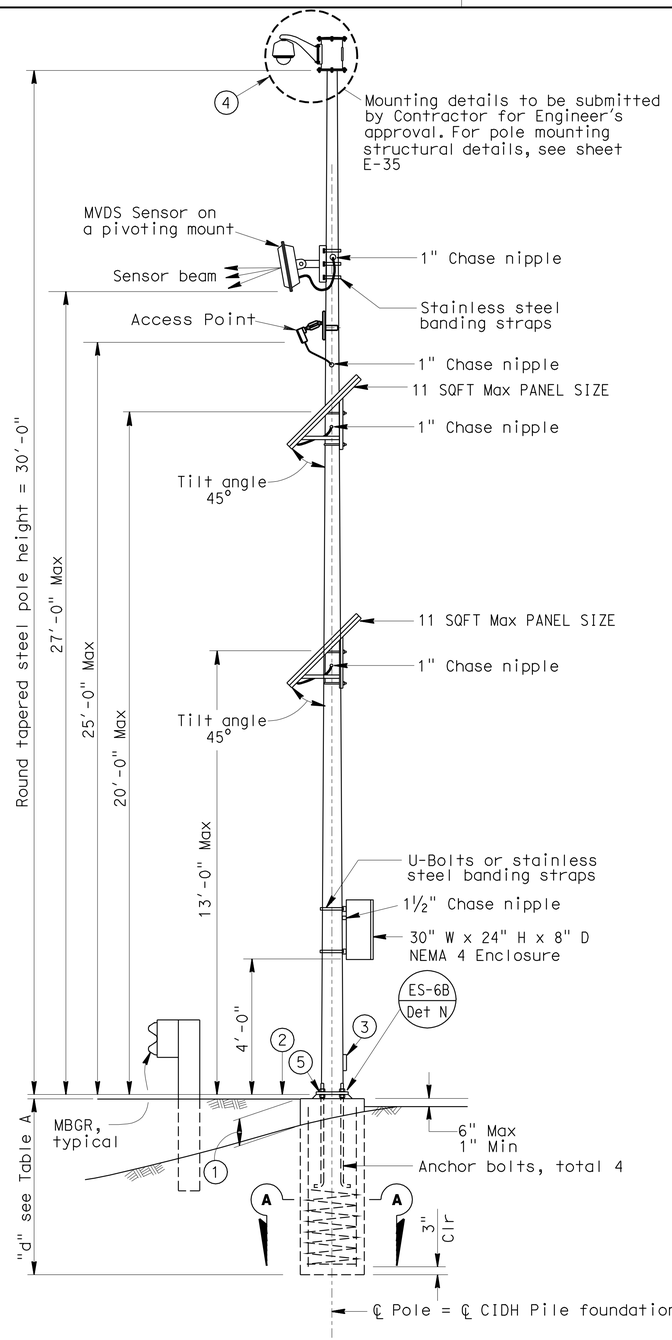

ELEVATION
CCTV/VDS 30
(Location 13, 26,29,33)
NO SCALE

NOTE:
THE CONTRACTOR SHALL VERIFY ALL CONTROLLING FIELD DIMENSIONS BEFORE ORDERING OR FABRICATING ANY MATERIAL.

1. 1'-3" Max for sloped finished grade
2. Bottom of base plate
3. Handhole (ES-7M)
4. Camera with mounting arm
5. Fatigue resistant weld (ES-7M Det F)

TABLE A

Pole Type	Pole Data: Height "h"	Min OD: BASE	Min OD: TOP	Thickness	Base Plate Data: "C"	Thickness	Anchor Bolts: SIZE	Anchor Bolts: BC = BOLT CIRCLE	"d" 2'-0" Ø CIDH Pile: LEVEL GROUND	"d" 2'-0" Ø CIDH Pile: SLOPING GROUND	Structural Steel LBS plus 3.5% Galvanizing
CCTV/VDS 30	30'	8"	3⅞"	0.1793"	1'-0"	1"	1" x 3'-0 x 4"	11"	12'-0"	12'-0"	475

TABLE B

Attachment	Mounting Height
Enclosure	4'-0" Max bottom Clr
Photovoltaic	13'- 20'
MVDS	27' Max
AP	25' Max

TABLE C

Spread Footing		
Ground	Footing Size Length x Width x Depth	Reinforcement Top & Bottom
Level	6'-0" x 6'-0" x 1'-6"	7 - #4
Sloping	7'-0" x 7'-0" x 1'-6"	8 - #4

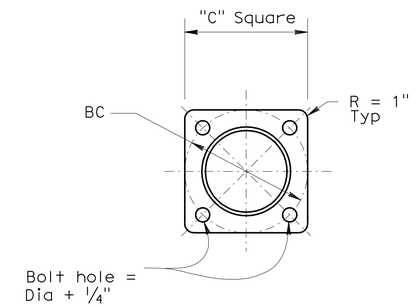

BASE PLATE
SCALE: 1½"= 1'

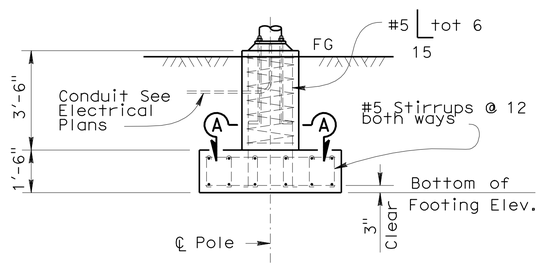

ALTERNATIVE FOOTING ELEVATION
(See TABLE C)
NO SCALE

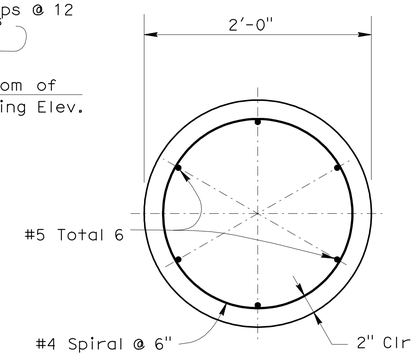

SECTION A-A
SCALE: 1½"= 1'

GENERAL NOTES:

SPECIFICATIONS

Design : AASHTO Standard specifications for structural supports for highway signs, luminaires and traffic signals dated 2001.

LOADING

Wind Loadings : 100 mph

UNIT STRESSES

Structural Steel : fy = 48,000 psi tapered steel tube
fy = 36,000 psi unless otherwise noted.

Anchor bolts = A307

Reinforced Concrete : f'c = 3,600 psi
fy = 60,000 psi

NOTES:

1. All steel shall be galvanized after fabrication.
2. During pole erection the post shall be raked as necessary with the use of leveling nuts to provide a plumb pole axis.
3. The foundation shall be treated as level ground condition if the slope inclination is flatter than 2H:1V.
4. For devices mounted and mounting heights, see TABLE B

CLOSED CIRCUIT TELEVISION SYSTEM
WIRELESS VEHICLE DETECTION SYSTEM
MICROWAVE VEHICLE DETECTION SYSTEM
(POLE DETAILS)

E-33

STATE OF CALIFORNIA - DEPARTMENT OF TRANSPORTATION
Caltrans
SPECIAL DESIGNS BRANCH

PROJECT ENGINEER ANDREW BUI
CALCULATED/DESIGNED BY E LOPEZ
CHECKED BY A BUI
DETAILS D W JUSTICE JR
QUANTITIES
DATE 6-23-08 6-23-08

LAST REVISION 3-12-09
DATE PLOTTED => 20-JAN-2010
TIME PLOTTED => 05:54

ORIGINAL SCALE IN INCHES FOR REDUCED PLANS 0 1 2 3

USERNAME => trmikesl
DGN FILE => spec_des_br_proj/2008sd/05-0n2601/05_0n2601_e33.dgn

CU 06391
EA 0N2601

DIST	COUNTY	ROUTE	POST MILES TOTAL PROJECT	SHEET No	TOTAL SHEETS
05	Mon	1	72.4/R101.6	39	51

REGISTERED CIVIL ENGINEER 2/23/09 DATE

5-4-09
PLANS APPROVAL DATE

REGISTERED PROFESSIONAL ENGINEER ANDREW BUI No. C63560 Exp. 9/30/10 CIVIL STATE OF CALIFORNIA

The State of California or its officers or agents shall not be responsible for the accuracy or completeness of electronic copies of this plan sheet.

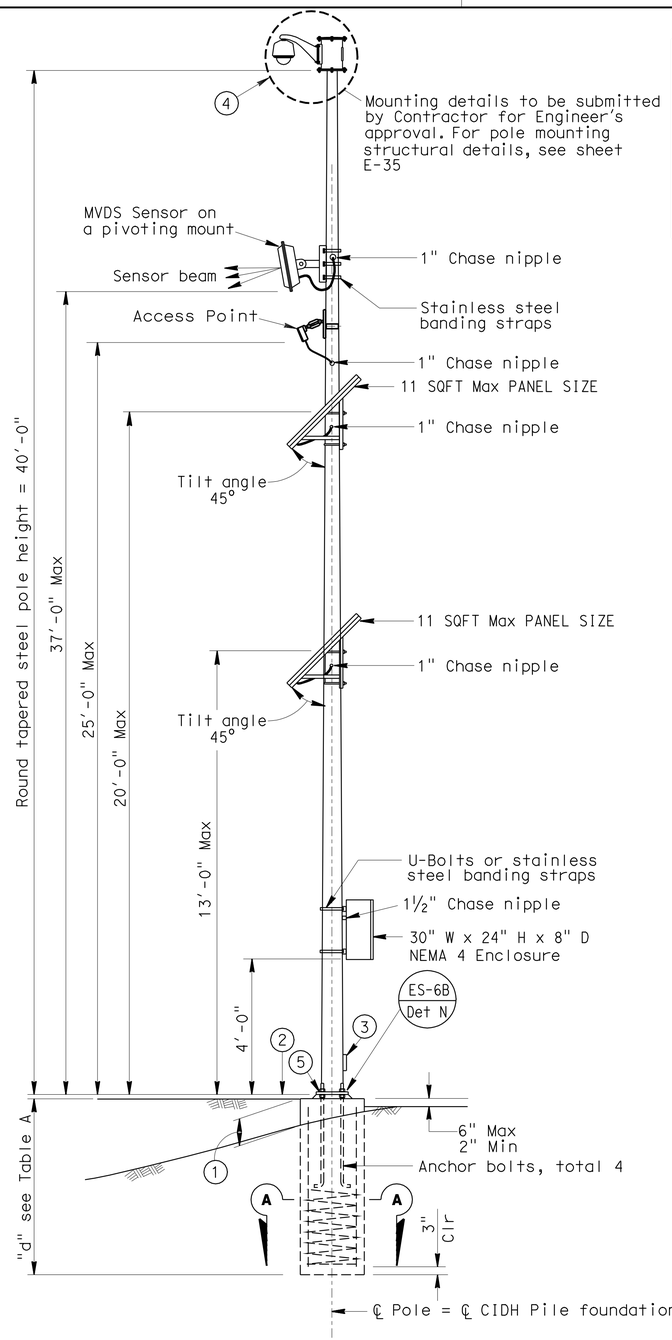

ELEVATION
CCTV/VDS 40
(Location 5,10)
NO SCALE

NOTE:
THE CONTRACTOR SHALL VERIFY ALL CONTROLLING FIELD DIMENSIONS BEFORE ORDERING OR FABRICATING ANY MATERIAL.

TABLE A

Pole Type	Pole Data: Height "h"	Pole Data: Min OD BASE	Pole Data: Min OD TOP	Pole Data: Thickness	Base Plate Data: "C"	Base Plate Data: Thickness	Base Plate Data: Anchor Bolts SIZE	Base Plate Data: Anchor Bolts BC = BOLT CIRCLE	"d" 2'-0" Ø CIDH Pile: LEVEL GROUND	"d" 2'-0" Ø CIDH Pile: SLOPING GROUND	Structural Steel LBS plus 3.5% Galvanizing
CCTV/VDS 40	40'	9⅜"	3⅞"	0.1793"	1'-1"	1"	1¼" x 3'-0 x 4"	1'-1"	12'-0"	12'-0"	650

TABLE B

Attachment	Mounting Height
Enclosure	4'-0" Max bottom Clr
Photovoltaic	13'- 20'
MVDS	37' Max
AP	25' Max

TABLE C

Spread Footing		
Ground	Footing Size Length x Width x Depth	Reinforcement Top & Bottom
Level	6'-0" x 6'-0" x 1'-6"	7 - #4
Sloping	7'-0" x 7'-0" x 1'-6"	8 - #4

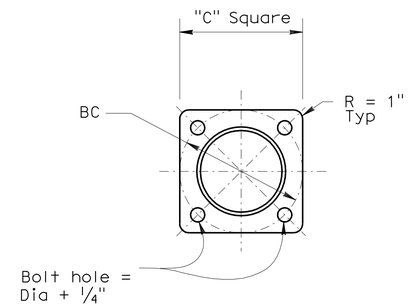

BASE PLATE
SCALE: 1½"= 1'

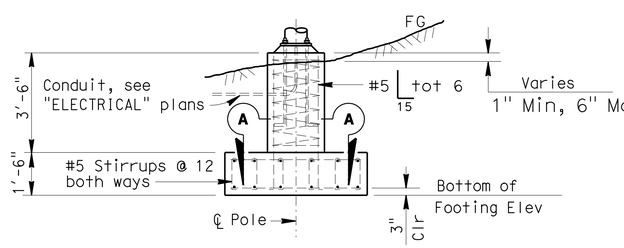

ALTERNATIVE FOOTING ELEVATION
(See TABLE C)
NO SCALE

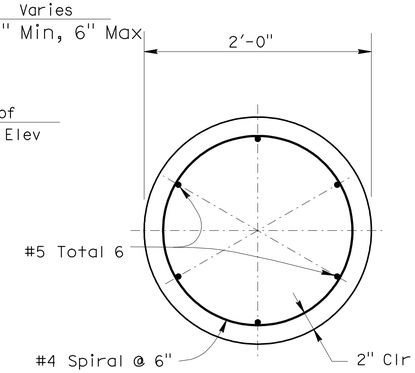

SECTION A-A
SCALE: 1½"= 1'

1. 1'-3" Max for sloped finished grade
2. Bottom of base plate
3. Handhole (ES-7M)
4. Camera with mounting arm
5. Fatigue resistant weld (ES-7M Det F)

GENERAL NOTES:

SPECIFICATIONS

Design : AASHTO Standard specifications for structural supports for highway signs, luminaires and traffic signals dated 2001.

LOADING

Wind Loadings : 100 mph

UNIT STRESSES

Structural Steel : fy = 48,000 psi tapered steel tube
fy = 36,000 psi unless otherwise noted.

Anchor bolts = A307

Reinforced Concrete : f'c = 3,600 psi
fy = 60,000 psi

NOTES:

1. All steel shall be galvanized after fabrication.
2. During pole erection the post shall be raked as necessary with the use of leveling nuts to provide a plumb pole axis.
3. The foundation shall be treated as level ground condition if the slope inclination is flatter than 2H:1V.
4. For devices mounted and mounting heights, see TABLE B

CLOSED CIRCUIT TELEVISION SYSTEM
WIRELESS VEHICLE DETECTION SYSTEM
MICROWAVE VEHICLE DETECTION SYSTEM
(POLE DETAILS)

E-34

CALCULATED/DESIGNED BY	E LOPEZ
CHECKED BY	A BUI
DETAILS	D W JUSTICE JR
QUANTITIES	E LOPEZ
DATE	6-23-08 / 6-23-08
PROJECT ENGINEER	ANDREW BUI

STATE OF CALIFORNIA - DEPARTMENT OF TRANSPORTATION
Caltrans
SPECIAL DESIGNS BRANCH

LAST REVISION 3-12-09 | DATE PLOTTED => 20-JAN-2010 | TIME PLOTTED => 05:54

ORIGINAL SCALE IN INCHES FOR REDUCED PLANS 0 1 2 3

USERNAME => trmikesl
DGN FILE => spec_des_br_proj/2008sd/05-0n2601/05_0n2601_e34.dgn

CU 06391 | EA 0N2601

DIST	COUNTY	ROUTE	POST MILES TOTAL PROJECT	SHEET No	TOTAL SHEETS
05	Mon	1	72.4/R101.6	40	51

REGISTERED CIVIL ENGINEER 8/4/08 DATE

5-4-09
PLANS APPROVAL DATE

REGISTERED PROFESSIONAL ENGINEER ANDREW BUI No. C63560 Exp. 9/30/10 CIVIL STATE OF CALIFORNIA

The State of California or its officers or agents shall not be responsible for the accuracy or completeness of electronic copies of this plan sheet.

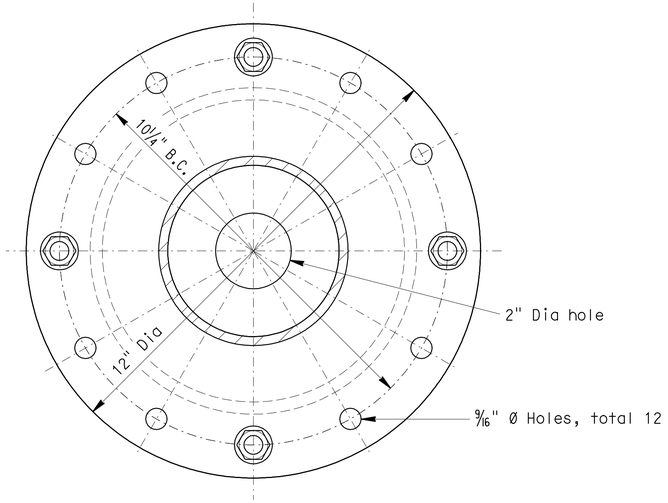

SECTION A-A

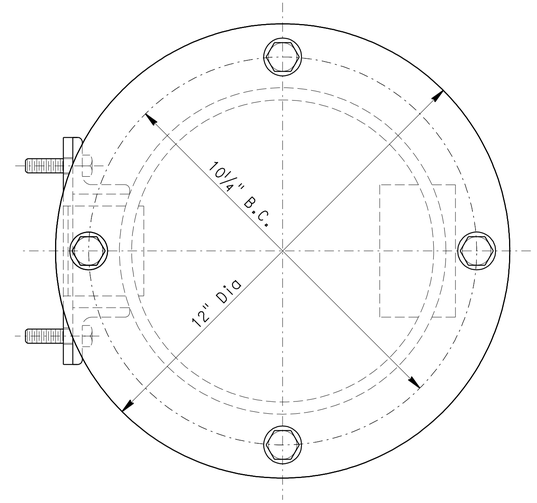

PLAN

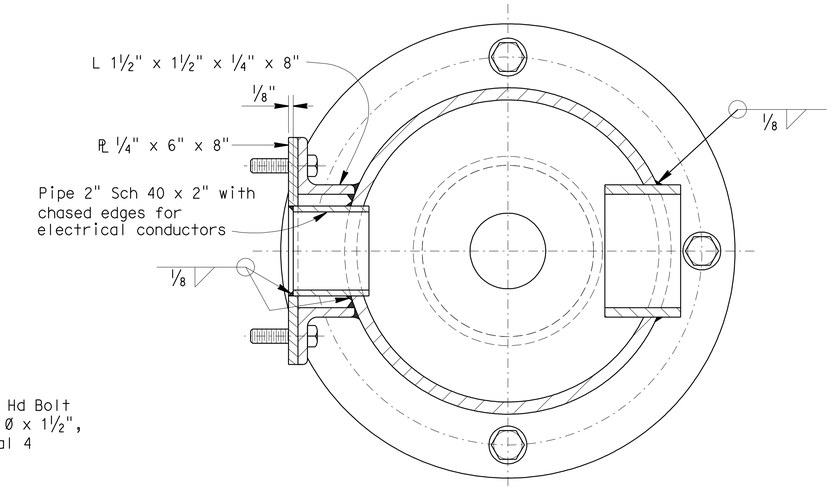

SECTION B-B

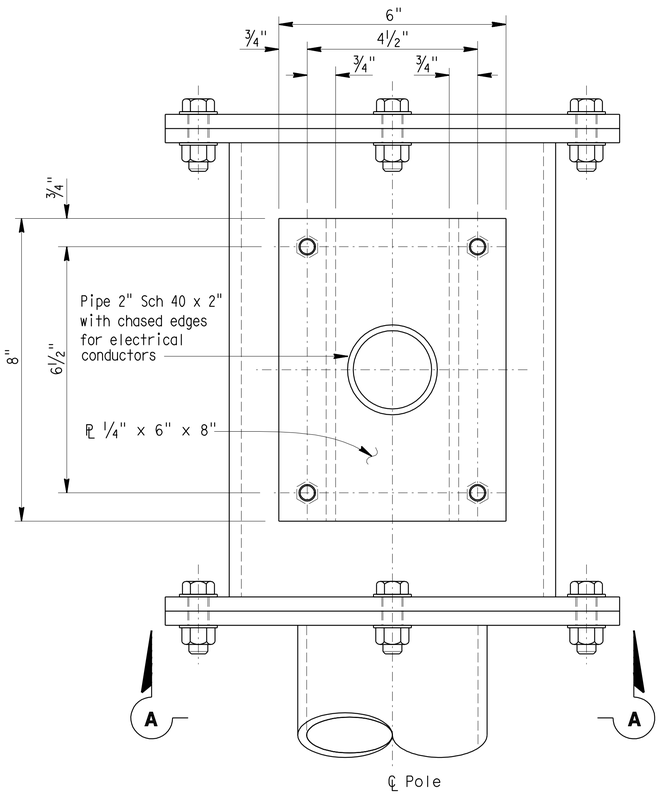

LEFT SIDE

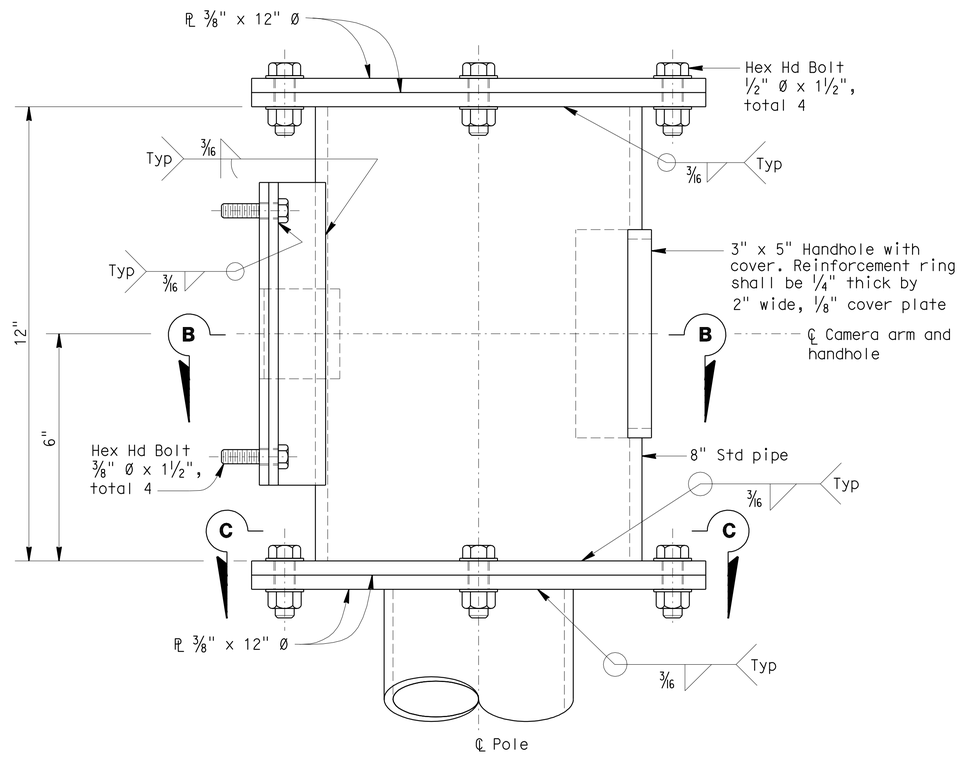

FRONT

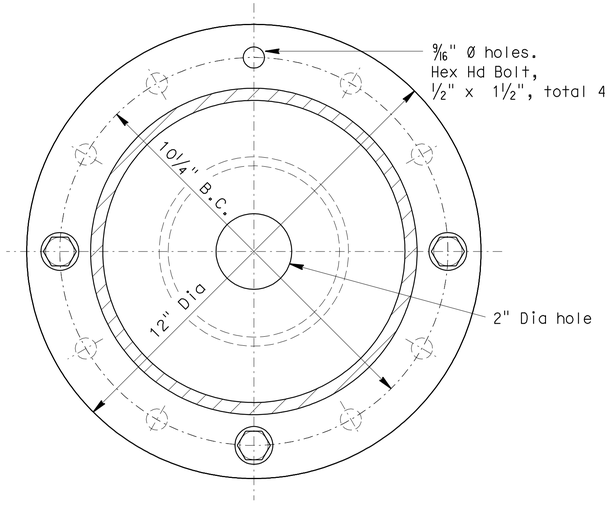

SECTION C-C

NOTE:
THE CONTRACTOR SHALL VERIFY ALL CONTROLLING FIELD DIMENSIONS BEFORE ORDERING OR FABRICATING ANY MATERIAL.

CLOSED CIRCUIT TELEVISION SYSTEM (POLE MOUNTING DETAILS)

NO SCALE

E-35

CALCULATED/DESIGNED BY	S VU	DATE 6/26/08	DETAILS	A R DUDSAK
CHECKED BY	A BUI	6/26/08	QUANTITIES	E. LOPEZ

PROJECT ENGINEER ANDREW BUI

STATE OF CALIFORNIA - DEPARTMENT OF TRANSPORTATION
Caltrans SPECIAL DESIGNS BRANCH

LAST REVISION 3-12-09 DATE PLOTTED => 20-JAN-2010 TIME PLOTTED => 05:54

ORIGINAL SCALE IN INCHES FOR REDUCED PLANS 0 1 2 3

USERNAME => trmikesl
DGN FILE =>spec_des_br_proj/2008sd/05-0N2601/05_0n2601_e35.dgn

CU 06391 EA 0N2601

Dist	COUNTY	ROUTE	POST MILES TOTAL PROJECT	SHEET No.	TOTAL SHEETS
05	Mon	1	72.4/R101.6	41	51

REGISTERED ELECTRICAL ENGINEER 03-16-09 DATE

5-4-09
PLANS APPROVAL DATE

REGISTERED PROFESSIONAL ENGINEER XAVIER IVANHOE ALFARO No. 17488 Exp. 6/30/09 ELECTRICAL STATE OF CALIFORNIA

THE STATE OF CALIFORNIA OR ITS OFFICERS OR AGENTS SHALL NOT BE RESPONSIBLE FOR THE ACCURACY OR COMPLETENESS OF SCANNED COPIES OF THIS PLAN SHEET.

ACCESS POINT/WIRELESS REPEATER

MOUNTING HEIGHT	VSN RANGE
8′	50′ - 75′
16′	75′ - 125′
24′	125′ - 150′

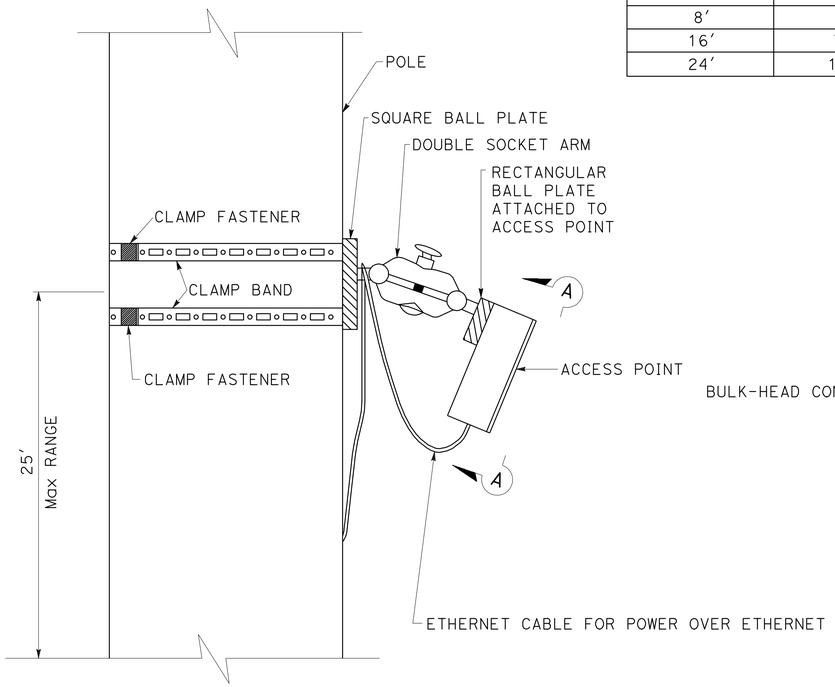

ACCESS POINT POLE MOUNT

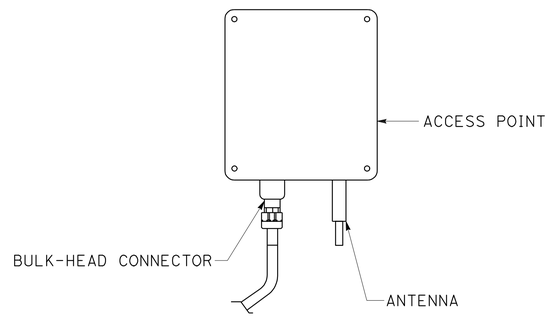

SECTION A-A

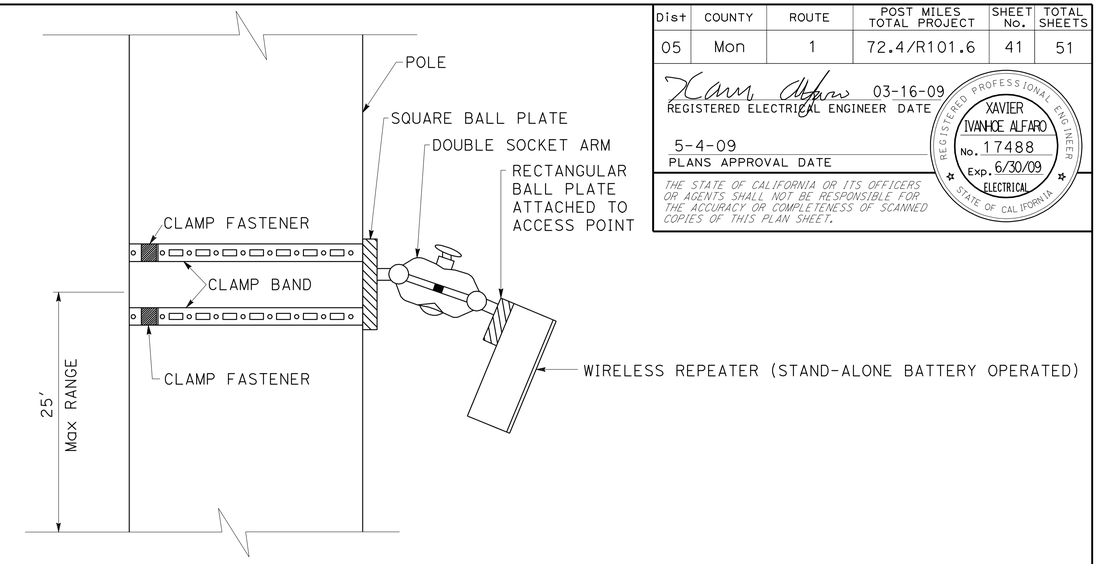

WIRELESS REPEATER POLE MOUNT

WIRELESS REPEATER

THE REPEATER IS A STAND-ALONE BATTERY OPERATED UNIT THAT EXTENDS THE RANGE OF AN ACCESS POINT BY UP TO 1000′. THE REPEATER IS DEPLOYED IN CONJUNCTION WITH AN ACCESS POINT WHEN THE DESIRED LOCATION OF THE VSN IS BEYOND THE 150′ RANGE OF THE ACCESS POINT

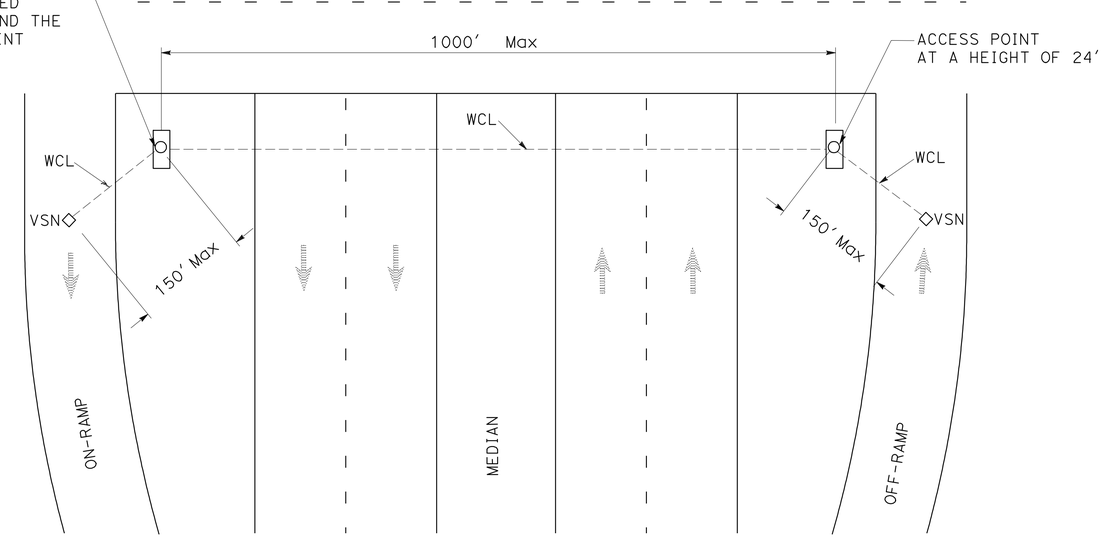

WVDS SYSTEM DETAIL

WIRELESS VEHICLE DETECTION SYSTEM

NO SCALE

E-36

THIS PLAN IS ACCURATE FOR ELECTRICAL WORK ONLY.

STATE OF CALIFORNIA - DEPARTMENT OF TRANSPORTATION
Caltrans® ELECTRICAL DESIGN

FUNCTIONAL SUPERVISOR: ALI BAKHDOUD
CALCULATED-DESIGNED BY: XAVIER ALFARO
CHECKED BY: ANHHUY NGUYEN
REVISED BY
DATE REVISED

LAST REVISION 03-10-09
DATE PLOTTED => 20-JAN-2010
TIME PLOTTED => 05:55

Dist	COUNTY	ROUTE	POST MILES TOTAL PROJECT	SHEET No.	TOTAL SHEETS
05	Mon	1	72.4/R101.6	42	51

REGISTERED ELECTRICAL ENGINEER 03-16-09 DATE

5-4-09
PLANS APPROVAL DATE

REGISTERED PROFESSIONAL ENGINEER
XAVIER IVANHOE ALFARO
No. 17488
Exp. 6/30/09
ELECTRICAL
STATE OF CALIFORNIA

THE STATE OF CALIFORNIA OR ITS OFFICERS OR AGENTS SHALL NOT BE RESPONSIBLE FOR THE ACCURACY OR COMPLETENESS OF SCANNED COPIES OF THIS PLAN SHEET.

VEHICLE SENSOR NODE VSN240-F INSTALLATION PROCEDURES:

1. PRIOR TO INSTALLATION, NOTE SENSOR'S ID, LANE NUMBER, AND LOCATION IN LANE.
2. UNLESS OTHERWISE SPECIFIED, INSTALL SENSOR IN THE MIDDLE OF THE LANE.
3. USE DOUBLE-CYLINDER 4" CORING BIT, WITH 1.25" STANDARD MACHINE THREADED SLEEVE.
4. MARK A LINE 2.25" FROM THE BOTTOM OF THE DOUBLE-CYLINDER CORING BIT, AND DRILL THROUGH THE ASPHALT CONCRETE OR PORTLAND CEMENT TO THIS DEPTH.
5. CORE A HOLE AT LEAST 2.25" DEEP SO THAT WHEN INSTALLED THE TOP OF THE SENSOR IS AT LEAST 0.25" BELOW THE SURFACE.
6. MAKE SURE THE SENSOR INSTALLS FLAT IN THE CORED HOLE AND IS NOT TILTED.
7. ONCE THE CORRECT DEPTH IS REACHED, USE THE HAMMER DRILL TO REMOVE THE INNER AND OUTER CYLINDRICAL "SHELLS", AND THE BUSHING BIT TO FLATTEN THE SURFACE.
8. ONCE COMPLETE, REMOVE ALL DUST AND DEBRIS OUT OF THE CORED HOLE.
9. USE THE HEAT-GUN OR HOT COMPRESSED AIR TO DRY THE INSIDE OF THE CORED HOLE.
10. IF THE HOLE IS TOO DEEP OR UNEVEN, SAND CAN BE USED TO FLATTEN THE SURFACE.
11. FILL THE HOLE ABOUT ¼ FULL OF THE SENSOR EPOXY/ADHESIVE.
12. PLACE SENSOR IN THE HOLE WITH ARROW POINTING IN THE DIRECTION OF TRAFFIC. THE EPOXY SHOULD STILL HAVE WORK TIME, SO THE SENSOR CAN BE ROTATED TO THE RIGHT POSITION. PUSH SENSOR DOWN SO IT LAYS FLAT ON THE BOTTOM OF THE HOLE. THIS ASSURES THAT THERE IS A BOND UNDERNEATH THE SENSOR WITH THE EPOXY.
13. FILL IN THE REMAINING EMPTY SPACE OF THE HOLE WITH EPOXY AND COVER THE SENSOR WITH EPOXY TO MAKE IT LEVEL WITH THE SURFACE OF THE ROAD.
14. THERE MUST BE ABSOLUTELY NO MOISTURE ON THE APPLIED SURFACE.
15. AFTER THE FIRST APPLICATION, DO NOT LET THE EPOXY SIT FOR MORE THAN 30 SECONDS BEFORE THE NEXT APPLICATION.
16. DEPENDING ON AMBIENT TEMPERATURE AND HUMIDITY, EPOXY DRYING TIME CAN VARY FROM 5 MINUTES TO 15 MINUTES. VERIFY HARDNESS OF EPOXY BEFORE REOPENING THE LANE FOR TRAFFIC.
17. INSTALL AT TEMPERATURE GREATER THAN -37°C.

VEHICLE SENSOR NODE CORED HOLE

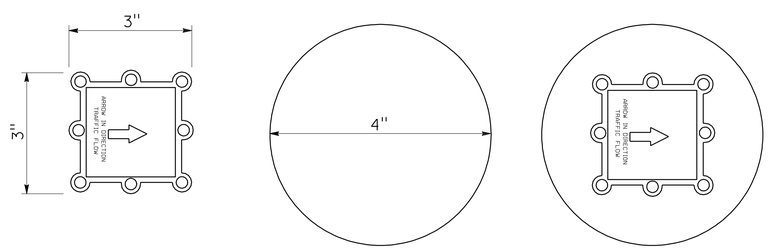

VEHICLE SENSOR NODE

VEHICLE SENSOR NODE IN HOLE

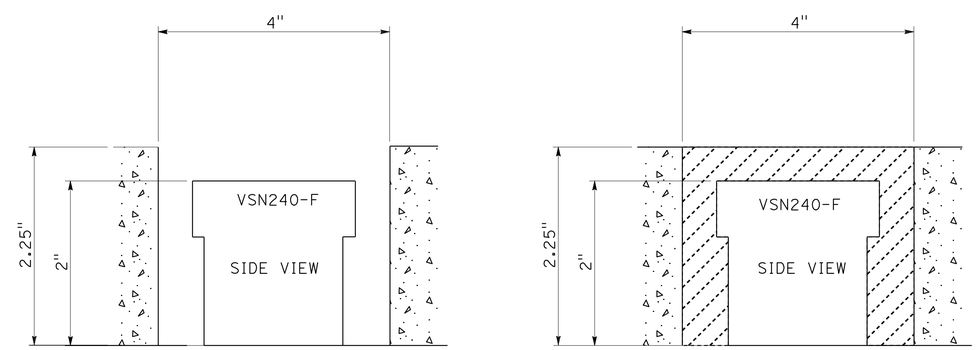

VEHICLE SENSOR NODE IN HOLE

VEHICLE SENSOR NODE IN HOLE WITH EPOXY

THIS PLAN IS ACCURATE FOR ELECTRICAL WORK ONLY.

WIRELESS VEHICLE DETECTION SYSTEM

NO SCALE

E-37

STATE OF CALIFORNIA - DEPARTMENT OF TRANSPORTATION
Caltrans® ELECTRICAL DESIGN

FUNCTIONAL SUPERVISOR: ALI BAKHDOUD
CALCULATED-DESIGNED BY: ANHHUY NGUYEN
CHECKED BY: XAVIER ALFARO
REVISED BY
DATE REVISED

LAST REVISION 03-10-09
DATE PLOTTED => 20-JAN-2010
TIME PLOTTED => 05:55

DIST	COUNTY	ROUTE	POST MILES TOTAL PROJECT	SHEET NO.	TOTAL SHEETS
05	Mon	1	72.4/R101.6	43	51

Randell D. Hiatt
REGISTERED CIVIL ENGINEER

June 6, 2008
PLANS APPROVAL DATE

REGISTERED PROFESSIONAL ENGINEER
Randell D. Hiatt
No. C50200
Exp. 6-30-09
CIVIL
STATE OF CALIFORNIA

The State of California or its officers or agents shall not be responsible for the accuracy or completeness of electronic copies of this plan sheet.

To accompany plans dated 5-4-09

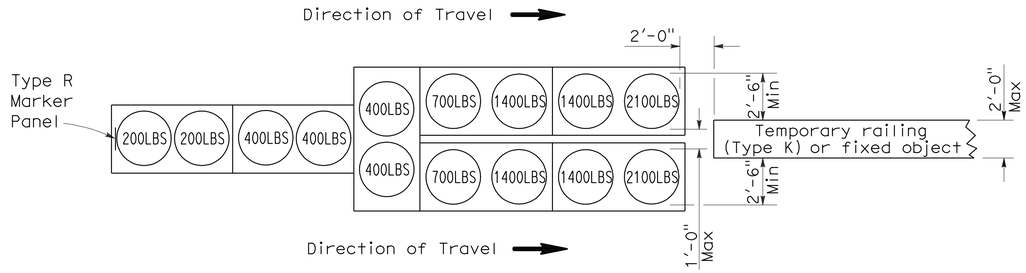

ARRAY 'TU14'

Approach speed 45 mph or more

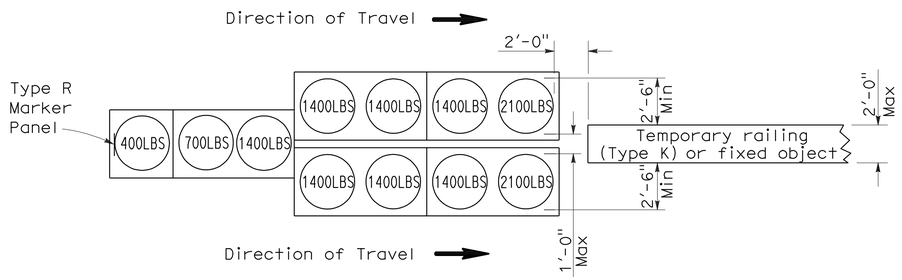

ARRAY 'TU11'

Approach speed less than 45 mph

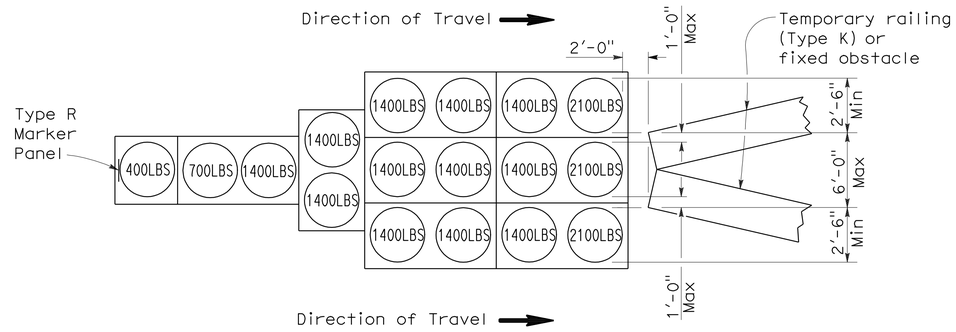

ARRAY 'TU17'

Approach speed less than 45 mph

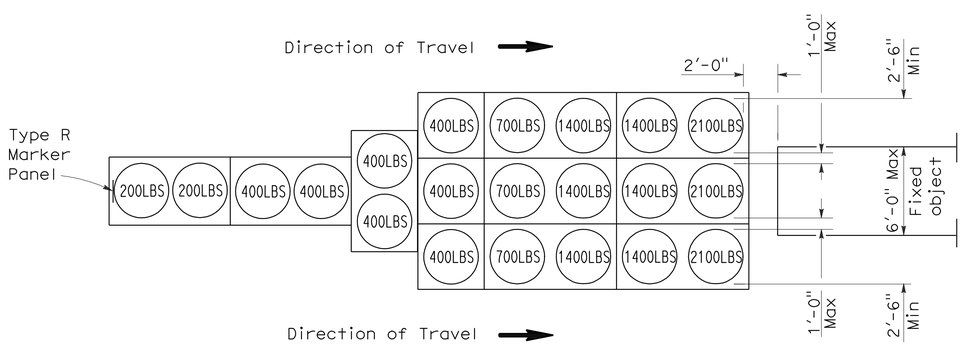

ARRAY 'TU21'

Approach speed 45 mph or more

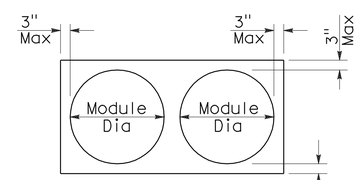

PLAN

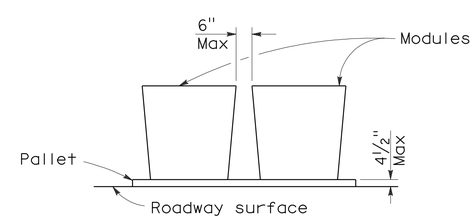

ELEVATION

CRASH CUSHION PALLET DETAIL

See Note 7

NOTES:

1. (XXX) Indicates sand filled module location and weight of sand in pounds for each module. Module spacing is based on the greater diameter of the module.
2. All sand weights are nominal.
3. Temporary crash cushion arrays shall not encroach on the traveled way.
4. Place the top of Type R marker panel 1" below the module lid.
5. Refer to Standard Plan A73B for marker details.
6. Approach speeds indicated conform to NCHRP 350 Report criteria.
7. Use of pallets is optional.

STATE OF CALIFORNIA
DEPARTMENT OF TRANSPORTATION

TEMPORARY CRASH CUSHION, SAND FILLED (UNIDIRECTIONAL)

NO SCALE

RSP T1A DATED JUNE 6, 2008 SUPERSEDES STANDARD PLAN T1A
DATED MAY 1, 2006 - PAGE 211 OF THE STANDARD PLANS BOOK DATED MAY 2006.

REVISED STANDARD PLAN RSP T1A

2006 REVISED STANDARD PLAN RSP T1A

5-15-08

DIST	COUNTY	ROUTE	POST MILES TOTAL PROJECT	SHEET NO.	TOTAL SHEETS
05	Mon	1	72.4/R101.6	44	51

Randell D. Hiatt
REGISTERED CIVIL ENGINEER

June 6, 2008
PLANS APPROVAL DATE

REGISTERED PROFESSIONAL ENGINEER
Randell D. Hiatt
No. C50200
Exp. 6-30-09
CIVIL
STATE OF CALIFORNIA

The State of California or its officers or agents shall not be responsible for the accuracy or completeness of electronic copies of this plan sheet.

To accompany plans dated 5-4-09

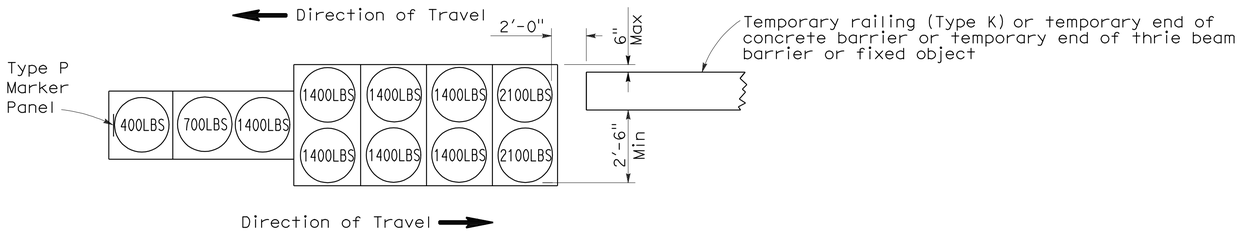

ARRAY 'TB11'

Approach speed less than 45 mph

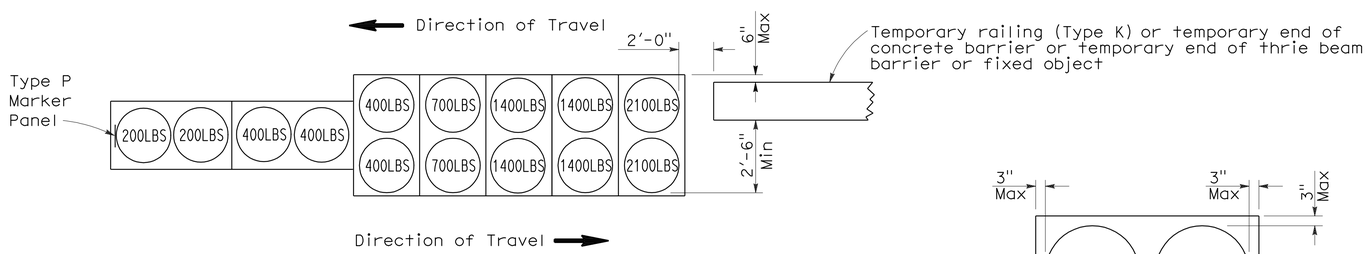

ARRAY 'TB14'

Approach speed 45 mph or more

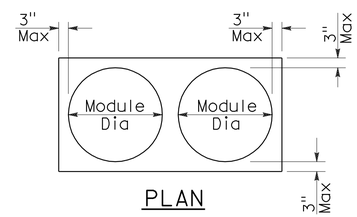

PLAN

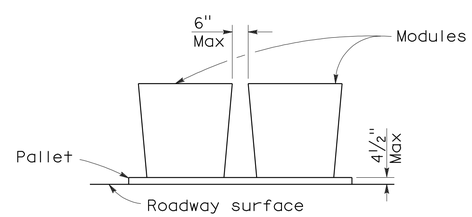

ELEVATION

CRASH CUSHION PALLET DETAIL

See Note 7

NOTES:

1. (XXX) Indicates sand filled module location and weight of sand in pounds for each module. Module spacing is based on the greater diameter of the module.
2. All sand weights are nominal.
3. Temporary crash cushion arrays shall not encroach on the traveled way.
4. Place the Type P marker panel so that the bottom of the panel rests upon the pallet.
5. Refer to Standard Plan A73B for marker details.
6. Approach speeds indicated conform to NCHRP 350 Report criteria.
7. Use of pallets is optional.

STATE OF CALIFORNIA
DEPARTMENT OF TRANSPORTATION

TEMPORARY CRASH CUSHION, SAND FILLED (BIDIRECTIONAL)

NO SCALE

RSP T1B DATED JUNE 6, 2008 SUPERSEDES STANDARD PLAN T1B
DATED MAY 1, 2006 - PAGE 212 OF THE STANDARD PLANS BOOK DATED MAY 2006.

REVISED STANDARD PLAN RSP T1B

2006 REVISED STANDARD PLAN RSP T1B

5-15-08

DIST	COUNTY	ROUTE	POST MILES TOTAL PROJECT	SHEET NO.	TOTAL SHEETS
05	Mon	1	72.4/R101.6	45	51

Randell D. Hiatt
REGISTERED CIVIL ENGINEER

June 6, 2008
PLANS APPROVAL DATE

REGISTERED PROFESSIONAL ENGINEER
Randell D. Hiatt
No. C50200
Exp. 6-30-09
CIVIL
STATE OF CALIFORNIA

The State of California or its officers or agents shall not be responsible for the accuracy or completeness of electronic copies of this plan sheet.

To accompany plans dated 5-4-09

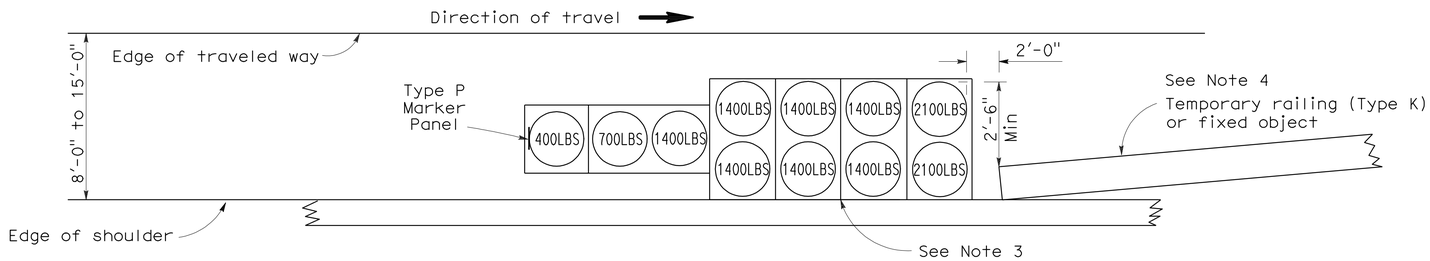

ARRAY 'TS11'

Approach speed less than 45 mph
See Note 9

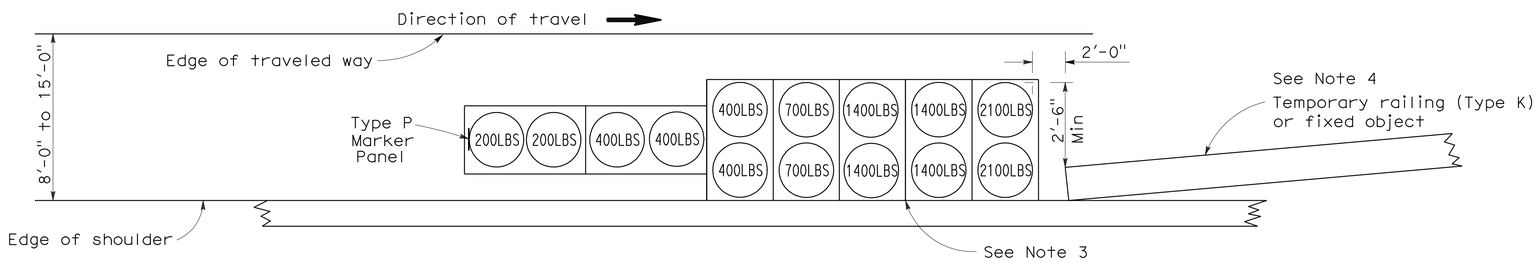

ARRAY 'TS14'

Approach speed 45 mph or more
See Note 9

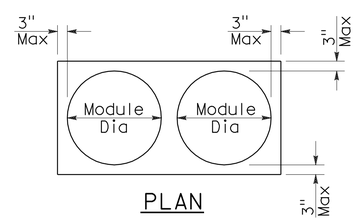

PLAN

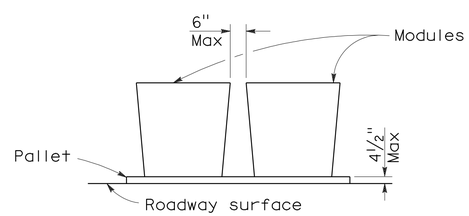

ELEVATION

CRASH CUSHION PALLET DETAIL

See Note 11

NOTES:

1. (XXX) Indicates sand filled module location and weight of sand in pounds for each module. Module spacing is based on the greater diameter of the module.
2. All sand weights are nominal.
3. The temporary crash cushion arrays shown on this plan shall be used only in locations where there will be traffic on one side of the temporary crash cushion array.
4. If the fixed object or approach end of the temporary railing is less than 15'-0" from the edge of traveled way, a temporary crash cushion is required in a construction or work zone.
5. Temporary crash cushion arrays shall not encroach on the traveled way.
6. Arrays for median shoulders shall conform to details shown on this plan for outside shoulders.
7. Place the Type P marker panel so that the bottom of the panel rests upon the pallet and faces traffic.
8. Refer to Standard Plan A73B for marker details.
9. For shoulder widths less than 8'-0", appropriate approved crash cushion protection, other than sand filled modules, shall be provided at fixed objects and at approach ends of temporary railing. The specific type of crash cushion shall be as shown on the project plans or as specified in the Special Provisions, or if not shown on the project plans or specified in the Special Provisions, shall be as approved by the Engineer.
10. Approach speeds indicated conform to NCHRP 350 Report criteria.
11. Use of pallets is optional.

STATE OF CALIFORNIA
DEPARTMENT OF TRANSPORTATION

TEMPORARY CRASH CUSHION, SAND FILLED (SHOULDER INSTALLATIONS)

NO SCALE

RSP T2 DATED JUNE 6, 2008 SUPERSEDES STANDARD PLAN T2
DATED MAY 1, 2006 - PAGE 213 OF THE STANDARD PLANS BOOK DATED MAY 2006.

REVISED STANDARD PLAN RSP T2

2006 REVISED STANDARD PLAN RSP T2

5-15-08

DIST	COUNTY	ROUTE	POST MILES TOTAL PROJECT	SHEET NO.	TOTAL SHEETS
05	Mon	1	72.4/R101.6	46	51

REGISTERED CIVIL ENGINEER

November 17, 2006
PLANS APPROVAL DATE

REGISTERED PROFESSIONAL ENGINEER
Greg W. Edwards
No. C36386
Exp. 6-30-08
CIVIL
STATE OF CALIFORNIA

The State of California or its officers or agents shall not be responsible for the accuracy or completeness of electronic copies of this plan sheet.

To accompany plans dated 5-4-09

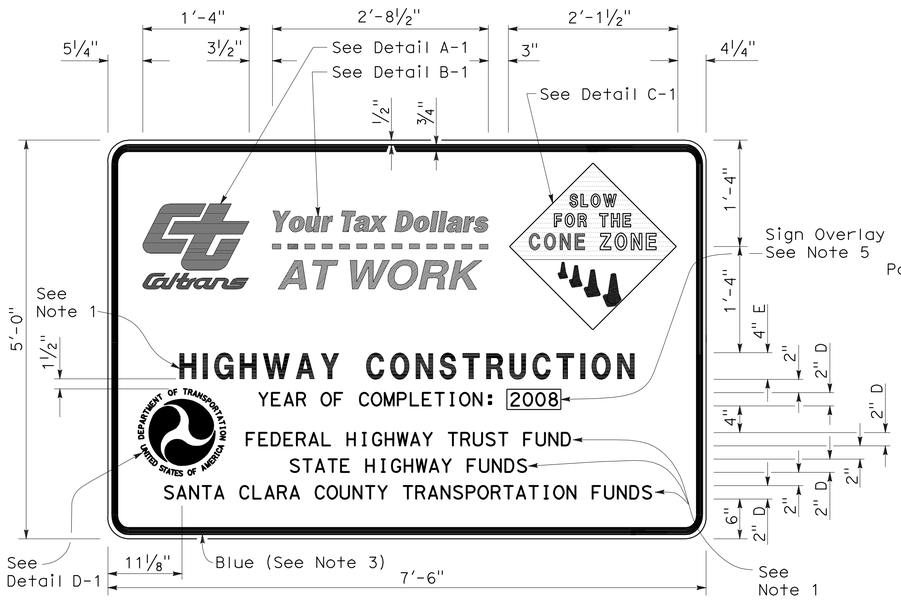

TYPE 1

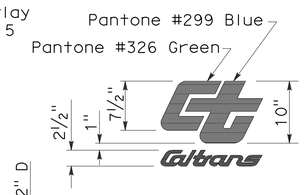

DETAIL A-1

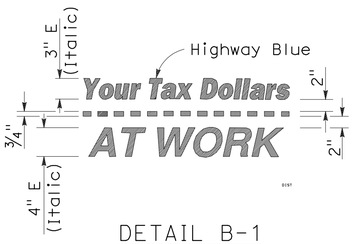

DETAIL B-1
(See Note 3)

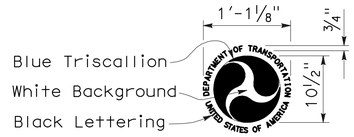

DETAIL D-1
(See Note 6)

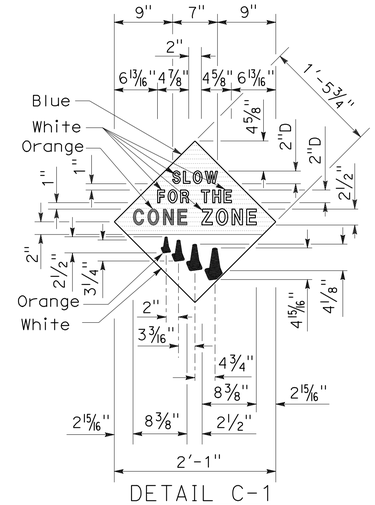

DETAIL C-1
(See Note 4)

NOTES:

1. The sign messages shown for type of project and fund types are examples only. See the Special Provisions for the applicable type of project and fund type messages to be used.
2. Except as otherwise shown, the legend of sign shall be black on a white background (non-reflective).
3. The border of the signs and details "B-1" and "B-2" shall be blue (non-reflective).
4. The diamond in details "C-1" and "C-2" shall be blue for the background of message, " SLOW FOR THE CONE ZONE", and white background for the orange cones. The color and type of font for the "SLOW FOR THE CONE ZONE" message shall be: "SLOW" white D; "FOR THE" white D; "CONE" orange Arial font; "ZONE" white Arial font.
5. Year of completion of project construction shown on the overlay is an example only. See the Special Provisions.
6. Use when the Project involves Federal Highway Trust Fund.

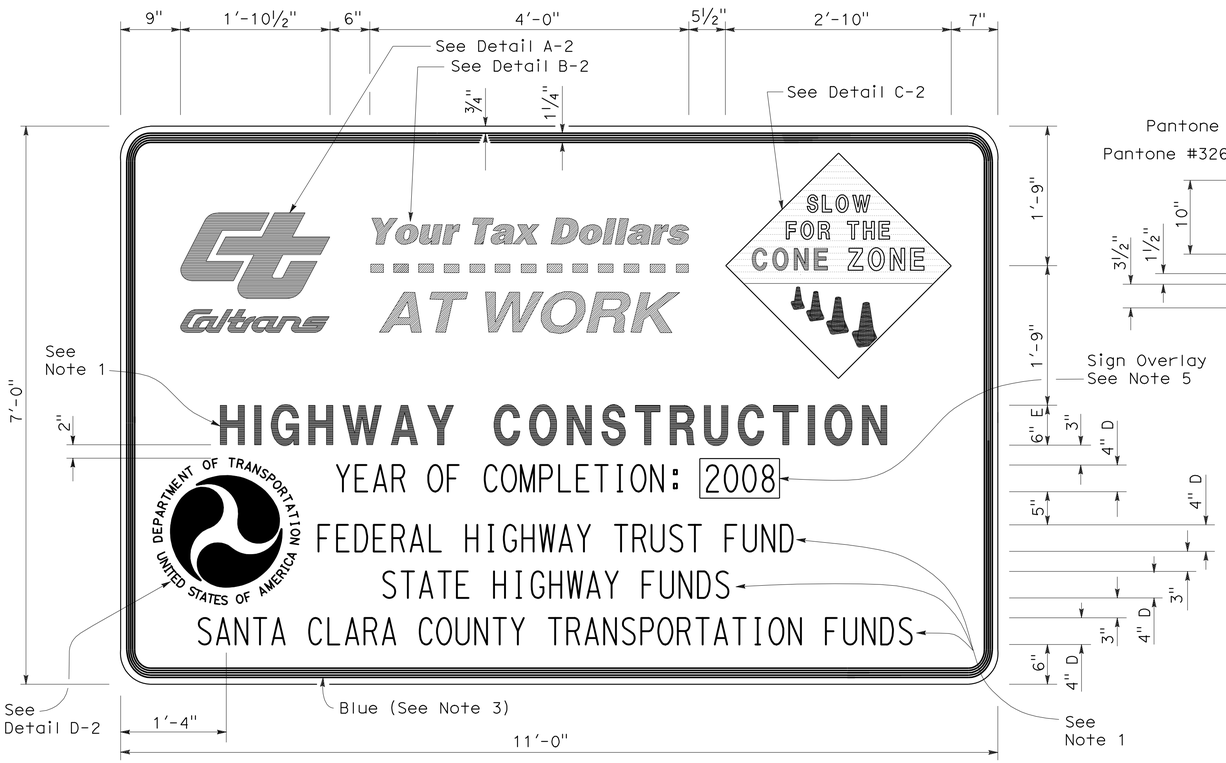

TYPE 2

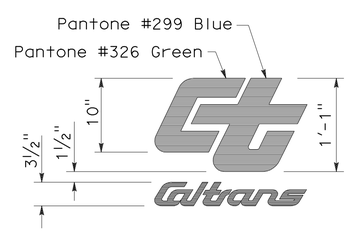

DETAIL A-2

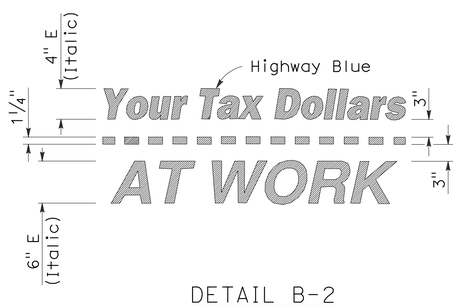

DETAIL B-2
(See Note 3)

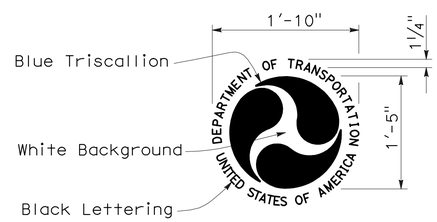

DETAIL D-2
(See Note 6)

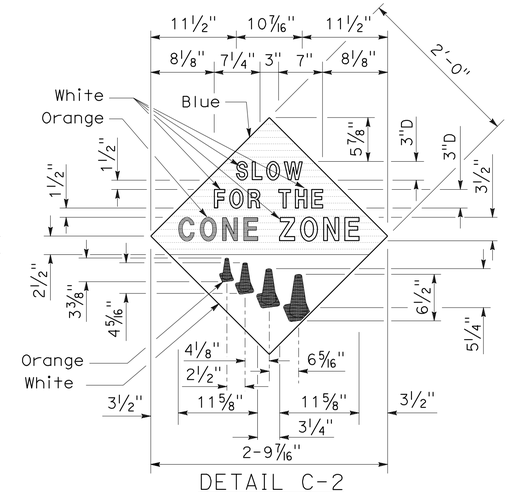

DETAIL C-2
(See Note 4)

STATE OF CALIFORNIA
DEPARTMENT OF TRANSPORTATION

CONSTRUCTION PROJECT FUNDING IDENTIFICATION SIGNS

NO SCALE

RSP T7 DATED NOVEMBER 17, 2006 SUPERSEDES STANDARD PLAN T7
DATED MAY 1, 2006 - PAGE 217 OF THE STANDARD PLANS BOOK DATED MAY 2006.

REVISED STANDARD PLAN RSP T7

2006 REVISED STANDARD PLAN RSP T7

9-7-06

DIST	COUNTY	ROUTE	POST MILES TOTAL PROJECT	SHEET NO.	TOTAL SHEETS
05	Mon	1	72.4/R101.6	47	51

REGISTERED ELECTRICAL ENGINEER

October 5, 2007
PLANS APPROVAL DATE

REGISTERED PROFESSIONAL ENGINEER Jeffery G. McRae No. E14512 Exp. 6-30-08 ELECTRICAL STATE OF CALIFORNIA

The State of California or its officers or agents shall not be responsible for the accuracy or completeness of electronic copies of this plan sheet.

To accompany plans dated 5-4-09

2006 REVISED STANDARD PLAN RSP ES-1A

ELECTROLIERS

STANDARD TYPES
15, 15D
15 STRUCTURE
21, 21D STRUCTURE
30
31
32
35
36-20A

High mast light pole

Double Arm lighting standard

Existing electrolier

Electrolier foundation (Future installation)

NOTES:

1. Luminaires shall be 310 W HPS when installed on Type 21, 21D, 30, 31, 32, 35 and 36-20A Standards, unless otherwise specified. Luminaires shall be 200 W HPS when installed on other type standards or poles, unless otherwise specified.
2. Luminaires shall be the cutoff type, ANSI Type III medium cutoff lighting distribution, unless otherwise specified.
3. Variations noted adjacent to symbol on project plans.

Electrolier (see project notes or project plans)

Luminaire on wood pole

STANDARD NOTES:

- AB — Abandon. If applied to conduit, remove conductors.
- BC — Install pull box in existing conduit run.
- BP — Pedestrian barricade, type as indicated on plan.
- CB — Install conduit into existing pull box.
- CC — Connect new and existing conduit. Remove existing conductors and install conductors as indicated.
- CF — Conduit to remain for future use. Remove conductors. Install pull wire or rope.
- DH — Detector handhole.
- FA — Foundation to be abandoned.
- IS — Install sign on signal mast arm.
- NS — No slip base on standard.
- PEC — Photoelectric control.
- PEU — Photoelectric unit.
- RC — Equipment or material to be removed and become the property of the Contractor.
- RE — Remove electrolier, fuses and ballast. Tape ends of conductors.
- RL — Relocate equipment.
- RR — Remove and reuse equipment.
- RS — Remove and salvage equipment.
- SC — Splice new to existing conductors.
- SD — Service disconnect.
- SF — Standard to remain for future use. Remove luminaire, pole conductors, fuses and ballast.
- TSP — Telephone service point.

ABBREVIATIONS AND EQUIPMENT DESIGNATIONS

PROPOSED	EXISTING	
BBS	bbs	Battery backup system
BC	bc	Bolt circle
C	C	Conduit
CCTV	cctv	Closed circuit television
CKT	ckt	Circuit
CMS	cms	Changeable message sign
DLC	dlc	Loop detector lead-in cable
EMS	ems	Extinguishable message sign
EVC	evc	Emergency vehicle cable
EVD	evd	Emergency vehicle detector
FB	fb	Flashing beacon
FBCA	fbca	Flashing beacon control assembly
FBS	fbs	Flashing beacon with slip base
FO	fo	Fiber optic
G	G	Ground (Equipment Grounding Conductor)
GFCI	GFCI	Ground fault circuit interrupt
HAR	har	Highway advisory radio
HEX	hex	Hexagonal
HPS	hps	High pressure sodium
IISNS	iisns	Internally illuminated street name sign
ISL	isl	Induction sign lighting
LED	led	Light emitting diode
LMA	lma	Luminaire mast arm
LPS	lps	Low pressure sodium
LTG	ltg	Lighting
LUM	lum	Luminaire
MAT	mat	Mast arm mounting vehicle signal faces, top attachment
MAS	mas	Mast arm mounting vehicle signal faces, side attachment
MAS-4A	mas-4A	Mast arm mounting vehicle signal faces, side attachment - 4 signal section
MAS-4B	mas-4B	
MAS-4C	mas-4C	
MAS-5A	mas-5A	Mast arm mounting vehicle signal faces, side attachment - 5 signal section
MAS-5B	mas-5B	
MC	mc	Mercury contactor
M/M	m/m	Multiple to multiple transformer
MT	mt	Conduit with pull wire or rope only
MTG	mtg	Mounting
	mv	Mercury vapor lighting fixture
N	N	Neutral (Grounded Conductor)
NC	NC	Normally closed
NO	NO	Normally open
PB	pb	Pull box
PEC	pec	Photoelectric control (Type I, II, III, IV or V as shown)
PED	ped	Pedestrian
PEU	peu	Photoelectric unit
PPB	ppb	Pedestrian push button
RL		Relocated equipment
RM	rm	Ramp metering
SB	sb	Slip base
SIC	sic	Signal interconnect cable
SIG	sig	Signal
SMA	sma	Signal mast arm
SNS	sns	Street name sign
SP	sp	Service point
TDC	tdc	Telephone demarcation cabinet
TMS	tms	Traffic monitoring station
TOS	tos	Traffic Operations System
VEH	veh	Vehicle
XFMR	xfmr	Transformer
COMM	comm	Communication
RWIS	rwis	Roadway weather information system

SOFFIT AND WALL MOUNTED LUMINAIRES

Pendant, 70 W HPS unless otherwise specified.

Flush, 70 W HPS unless otherwise specified.

Wall surface, 70 W HPS unless otherwise specified.

Existing soffit or wall luminaire to remain unmodified.

Existing soffit or wall luminaire to be modified as specified.

NOTE:

Arrow indicates "street side" of luminaire.

STATE OF CALIFORNIA
DEPARTMENT OF TRANSPORTATION

ELECTRICAL SYSTEMS (SYMBOLS AND ABBREVIATIONS)

NO SCALE

RSP ES-1A DATED OCTOBER 5, 2007 SUPERSEDES STANDARD PLAN ES-1A DATED MAY 1, 2006 - PAGE 400 OF THE STANDARD PLANS BOOK DATED MAY 2006.

REVISED STANDARD PLAN RSP ES-1A

DIST	COUNTY	ROUTE	POST MILES TOTAL PROJECT	SHEET NO.	TOTAL SHEETS
05	Mon	1	72.4/R101.6	48	51

REGISTERED ELECTRICAL ENGINEER

October 5, 2007
PLANS APPROVAL DATE

REGISTERED PROFESSIONAL ENGINEER Jeffery G. McRae No. E14512 Exp. 6-30-08 ELECTRICAL STATE OF CALIFORNIA

The State of California or its officers or agents shall not be responsible for the accuracy or completeness of electronic copies of this plan sheet.

To accompany plans dated 5-4-09

CONDUIT

PROPOSED	EXISTING	
		Lighting Conduit, unless otherwise indicated or noted
		Traffic signal conduit
C	c	Communication conduit
T	t	Telephone conduit
F	f	Fire alarm conduit
FO	fo	Fiber optic conduit
		Conduit termination (RSP ES-9A C)
R	r	Conduit riser in/on structure or service pole

SERVICE EQUIPMENT

PROPOSED	EXISTING	
OH	oh	Overhead lines
U	U	Wood pole "U" indicates utility owned
		Pole guy with anchor
		Utility transformer - ground mounted
III		Service equipment enclosure type
		Service equipment enclosure door indicates front of enclosure
T	t	Telephone demarcation cabinet

POLE-MOUNTED SERVICE DESIGNATION

Type of installation

TYPE H SERVICE - 28'-10" ← Pole height above grade

ILLUMINATED OVERHEAD SIGN

PROPOSED	EXISTING	
		Overhead sign - Single post
		Overhead sign - Two post
		Overhead sign - Mounted on structure
		Overhead sign with electrolier

SIGNAL EQUIPMENT

PROPOSED	EXISTING	
		Pedestrian signal face
		Pedestrian push button post
		Pedestrian barricade
		Vehicle signal face (with backplate, 3-Section: red, yellow and green)
		Vehicle signal face with angle visors
PV	PV	Modifications of basic symbols: "L" indicates all non-arrow sections louvered "LG" indicates louvered green section only "PV" indicates 12" programmed visibility sections "8" indicates all 8" sections (only when specified)
		Type 15TS and Vehicle signal face
		Vehicle signal face with red, yellow and green left arrow sections
		Vehicle signal face with red and yellow sections and up green arrow
		Vehicle signal face (5 Section) with red, yellow and green sections and yellow and green right arrows
		Type 1 Standard and attached vehicle signal faces
		Standard with signal mast arm only and attached vehicle signal faces and internally illuminated street name sign
		Type 33 Standard, Left-turn vehicle signal face and sign
		Standard with luminaire and signal mast arms and attached vehicle signal faces
		Cantilever flashing beacon Type 9 Frame, with a sign unless otherwise specified or indicated
		Type 15-FBS Standard with two vehicle signal face sections with lens, backplate and visor with a sign
R	Y	Flashing beacon. One vehicle signal face section with lens, backplate and visor. "R" indicates red indication, "Y" indicates yellow indication
		Controller assembly. Door indicates front of cabinet

SIGNAL EQUIPMENT Cont

PROPOSED	EXISTING	
		Guard post
		Type 1 Standard with "Meter On" sign
		Emergency Vehicle detector

NOTES:

1. All signal sections shall be 12" unless shown otherwise.
2. Signal heads shall be provided with backplates unless shown otherwise.
3. Signal indication shall be LED.

STATE OF CALIFORNIA
DEPARTMENT OF TRANSPORTATION

ELECTRICAL SYSTEMS (SYMBOLS AND ABBREVIATIONS)

NO SCALE

RSP ES-1B DATED OCTOBER 5, 2007 SUPERCEDES STANDARD PLAN ES-1B DATED MAY 1, 2006 - PAGE 401 OF THE STANDARD PLANS BOOK DATED MAY 2006.

REVISED STANDARD PLAN RSP ES-1B

2006 REVISED STANDARD PLAN RSP ES-1B

7-10-07

DIST	COUNTY	ROUTE	POST MILES TOTAL PROJECT	SHEET NO.	TOTAL SHEETS
05	Mon	1	72.4/R101.6	49	51

REGISTERED ELECTRICAL ENGINEER

October 5, 2007
PLANS APPROVAL DATE

REGISTERED PROFESSIONAL ENGINEER Jeffery G. McRae No. E14512 Exp. 6-30-08 ELECTRICAL STATE OF CALIFORNIA

The State of California or its officers or agents shall not be responsible for the accuracy or completeness of electronic copies of this plan sheet.

To accompany plans dated 5-4-09

EQUIPMENT IDENTIFICATION

ILLUMINATED SIGN IDENTIFICATION NUMBER:

Sign No. 12345
10 ISL SCI 1.0

- Sign number - Place on post or structure
- Transformer rating (kVA)
- Lighting control type
- Number and type of fixtures

Do NOT place on standard or structure

ELECTROLIER OR EQUIPMENT IDENTIFICATION NUMBER:

12345 - 15'-0"

- Mast arm length, if shown. Do not place on standard or structure.
- Equipment number - Place on standard or structure. Existing equipment numbers are shown in parenthesis

CONDUIT AND CONDUCTOR IDENTIFICATION:

1½"C, 2#10, 15#14, 2 DLC

- Number and size of conductors and cables
- Size of conduit in inches

Ø1, Ø2, Ø2P, etc.	Traffic phase identification for signal faces, detectors and phase diagrams
1 2 3	Project note numbers
A B C	Equipment description, installation or item numbers
1 2 3	Conduit run numbers

SIGNAL AND LIGHTING STANDARD (TYPICAL DESIGNATION):

19A - 3 - 100

- Wind velocity = 100 mph
- Case 3 arm loading
- Standard type
- Standard Plan sheet number
- Detail number or letter

MISCELLANEOUS EQUIPMENT

PROPOSED	EXISTING	
CMS	cms	Changeable message sign
		Closed circuit television camera
		Highway advisory radio pole and antenna
EMS	ems	Extinguishable message sign
M V	m v	Detection device M = Microwave sensor V = Video image sensor

WIRING DIAGRAM LEGEND

P	Pole
CB	Circuit breaker
A	Ampere
V	Volt
M	Metered
UM	Unmetered
NB	Neutral bus
GB	Ground bus
G	Equipment grounding conductor
N	Grounded conductor (Neutral)

- External conductor
- Conductor or bus
- Tie point
- Contactor coil
- Contactor, Contact NO
- Terminal blocks
- Contactor, Contact NC
- Enclosure bond
- Grounding electrode
- Circuit breaker
- Receptacle

PULL BOXES

PROPOSED	EXISTING	
		Pull box-No. 5 unless otherwise indicated or noted.
3	9A(21)	Pull box-Additional designations or descriptions

3 = No. 3½ pull box
5 = No. 5 pull box
6 = No. 6 pull box
7 = No. 7 (Ceiling pull box)
8 = No. 8 (Pendant soffit pull box)
9 = No. 9 pull box
9A = No. 9A pull box

(C) = Communications pull box
(E) = Pull box with extension
(S) = Sprinkler control pull box
(21) = Anchor bolts and conduit for future installation of Type 21 Standard
(T) = Traffic pull box

VEHICLE DETECTORS

5 J 9 U

- Vehicle detector designation
- U = Upper
  L = Lower
- Slot number in input file
- Input file (I or J)
- Phase

PROPOSED	EXISTING	
		Type A detector loop. Outline of sawcut shown.
		Type B detector loop. Outline of sawcut shown.
		Type C detector loop. Outline of sawcut shown.
		Type D detector loop. Outline of sawcut shown.
		Type E detector loop. Outline of sawcut shown.
		Type Q detector loop. Outline of sawcut shown.
		Magnetic detector
DH	dh	Detector handhole
		Microwave or video detection zone

STATE OF CALIFORNIA
DEPARTMENT OF TRANSPORTATION

ELECTRICAL SYSTEMS (SYMBOLS AND ABBREVIATIONS)

NO SCALE

RSP ES-1C DATED OCTOBER 5, 2007 SUPERCEDES STANDARD PLAN ES-1C DATED MAY 1, 2006 - PAGE 402 OF THE STANDARD PLANS BOOK DATED MAY 2006.

REVISED STANDARD PLAN RSP ES-1C

2006 REVISED STANDARD PLAN RSP ES-1C

DIST	COUNTY	ROUTE	POST MILES TOTAL PROJECT	SHEET NO.	TOTAL SHEETS
05	Mon	1	72.4/R101.6	50	51

REGISTERED ELECTRICAL ENGINEER

October 5, 2007
PLANS APPROVAL DATE

REGISTERED PROFESSIONAL ENGINEER
Jeffery G. McRae
No. E14512
Exp. 6-30-08
ELECTRICAL
STATE OF CALIFORNIA

The State of California or its officers or agents shall not be responsible for the accuracy or completeness of electronic copies of this plan sheet.

To accompany plans dated 5-4-09

NOTES-TYPE III SERVICE EQUIPMENT ENCLOSURES:

1. Service equipment enclosure and metering equipment shall meet the requirements of the service utility. The meter area shall have a sealable, lockable, weathertight cover that can be removed without the use of tools.

2. Service equipment enclosures shall be factory wired and conform to NEMA standards.

3. Dimensions of service equipment enclosures shall meet the requirements of the service utility.

4. The dead front panels on Type III service equipment enclosures shall have a continuous stainless steel or aluminum piano hinge. The panel in front of the breakers shall be secured with a latch or captive screws. No live parts shall be mounted on the dead front panel.

5. The exterior door shall have provisions for padlocking. The padlock hole shall be a minimum diameter of 7/16".

6. Enclosures housing transformers of more than one kVA shall have effective screened ventilation louver of not less than 50 square inches. Screen shall be stainless steel No. 304, with a No. 10 size mesh. Framed screen shall be secured with at least four bolts.

7. Fasteners on the exterior of the enclosure shall be vandal-resistant and shall not be removable from the exterior. Exterior screws, nuts, bolts and washers shall be stainless steel.

8. Landing lugs for incoming service conductors shall be compatible with either copper or aluminum conductors sized to suit the conductors shown on the plan. Landing lugs shall be copper or tin-plated aluminum. Neutral bus shall be rated for 125 A and be suitable for copper or aluminum conductors unless otherwise specified. The terminal shall include but not be limited to:

   a) Incoming terminals (landing lugs)
   b) Neutral lugs
   c) Solid neutral terminal strip

9. At least 6 standard single pole circuit breaker spaces, 3/4" nominal, shall be provided for branch circuits. Circuit breaker interiors shall be copper. Interiors of enclosure shall accept plug-in or cable-in/cable-out circuit breakers.

10. Control wiring shall be 600 V, 14 stranded machine tool wire. Where subject to flexing, 19 strand wire shall be used.

11. Main bus shall be rated for 125 A and shall be tin-plated copper.

12. A plastic laminated wiring diagram shall be provided with brass mounting eyelets and attached to the inside of the enclosure and the wiring diagram shall be affixed to the interior with a UL or ETL approved method.

13. An engraved phenolic nameplate on the dead front panel indicating the function of each circuit or device shall be installed with stainless steel rivets or stainless steel screws:

    a) Adjacent to the breaker or device with character size a minimum of 1/8".

    b) At the top of the exterior door panel indicating State system number, voltage level and number of phases with character size a minimum of 3/16".

14. The plan shows the approximate location of devices within the enclosure. Components may be rearranged, however, the "working" clearances within the service equipment enclosure shall be maintained.

15. In unpaved areas a raised portland cement concrete pad 2'-0" x 4" x width of foundation shall be constructed in front of new service equipment enclosure installation. Pad shall be set to elevation of foundation.

16. Foundation shall extend 2" minimum beyond edge of service equipment enclosure.

17. Internal bus, where shown, is typical only. Alternative design of proposed service equipment enclosure shall be submitted to the Engineer for approval.

18. Plug-in circuit breakers may be mounted in the vertical or horizontal position. Cable-in/cable-out circuit breakers shall be mounted in the vertical position.

19. Type III-AF and Type III-BF service equipment enclosures shall have the meter viewing windows located on the front side of the service equipment enclosures.

20. Type III-AR and Type III-BR service equipment enclosures shall be similarly constructed as Type III-AF and Type III-BF respectively, except the meter viewing windows shall be located on the back side of the service equipment enclosures.

21. Minimum clearance shall be required for front and back of service equipment enclosure per National Electrical Code, Article 110.26, "Spaces About Electric Equipment (600 Volts, Nominal, or Less)."

STATE OF CALIFORNIA
DEPARTMENT OF TRANSPORTATION

ELECTRICAL SYSTEMS (SERVICE EQUIPMENT NOTES TYPE III SERIES)

NO SCALE

RSP ES-2C DATED OCTOBER 5, 2007 SUPERCEDES STANDARD PLAN ES-2C
DATED MAY 1, 2006 - PAGE 405 OF THE STANDARD PLANS BOOK DATED MAY 2006.

REVISED STANDARD PLAN RSP ES-2C

2006 REVISED STANDARD PLAN RSP ES-2C

DIST	COUNTY	ROUTE	POST MILES TOTAL PROJECT	SHEET NO.	TOTAL SHEETS
05	Mon	1	72.4/R101.6	51	51

REGISTERED ELECTRICAL ENGINEER

October 5, 2007
PLANS APPROVAL DATE

REGISTERED PROFESSIONAL ENGINEER Jeffery G. McRae No. E14512 Exp. 6-30-08 ELECTRICAL STATE OF CALIFORNIA

The State of California or its officers or agents shall not be responsible for the accuracy or completeness of electronic copies of this plan sheet.

To accompany plans dated 5-4-09

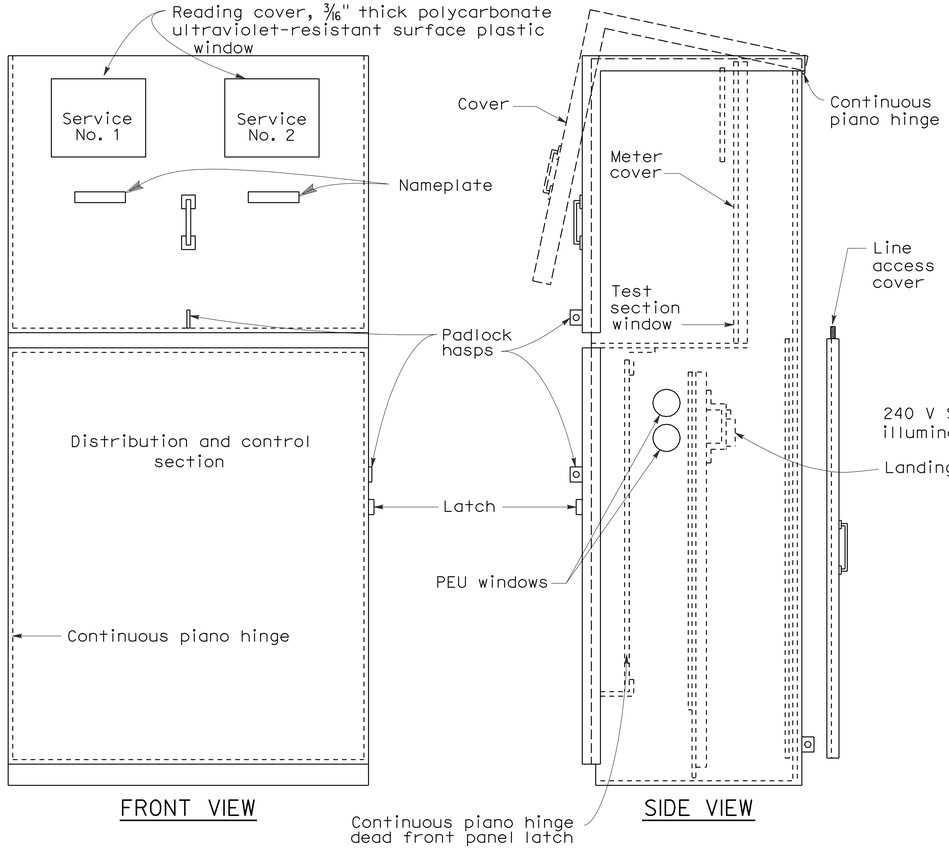

TYPE III-CF SERVICE EQUIPMENT ENCLOSURE WITH PROVISIONS FOR TWO 100 A METERS (TYPICAL)

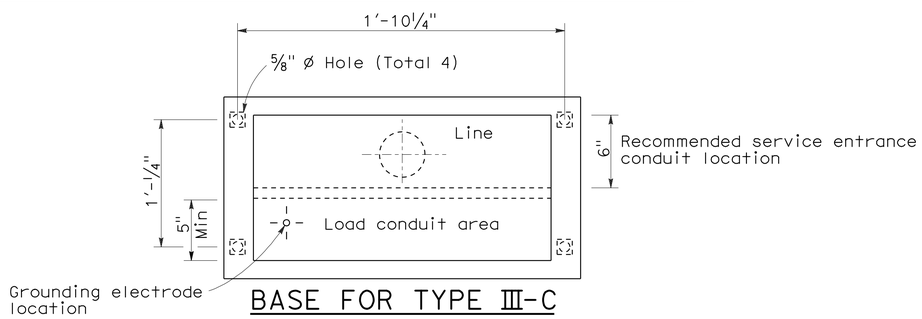

BASE FOR TYPE III-C SERVICE EQUIPMENT ENCLOSURE

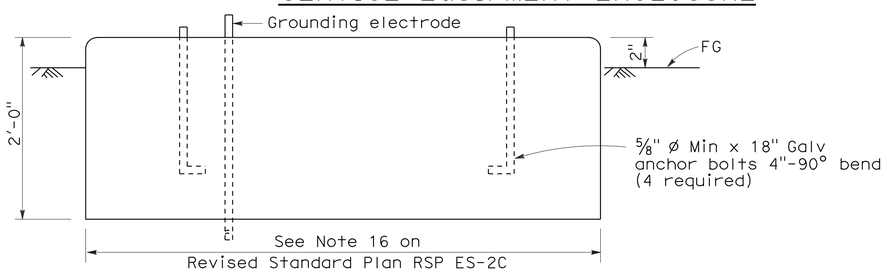

FOUNDATION DETAIL

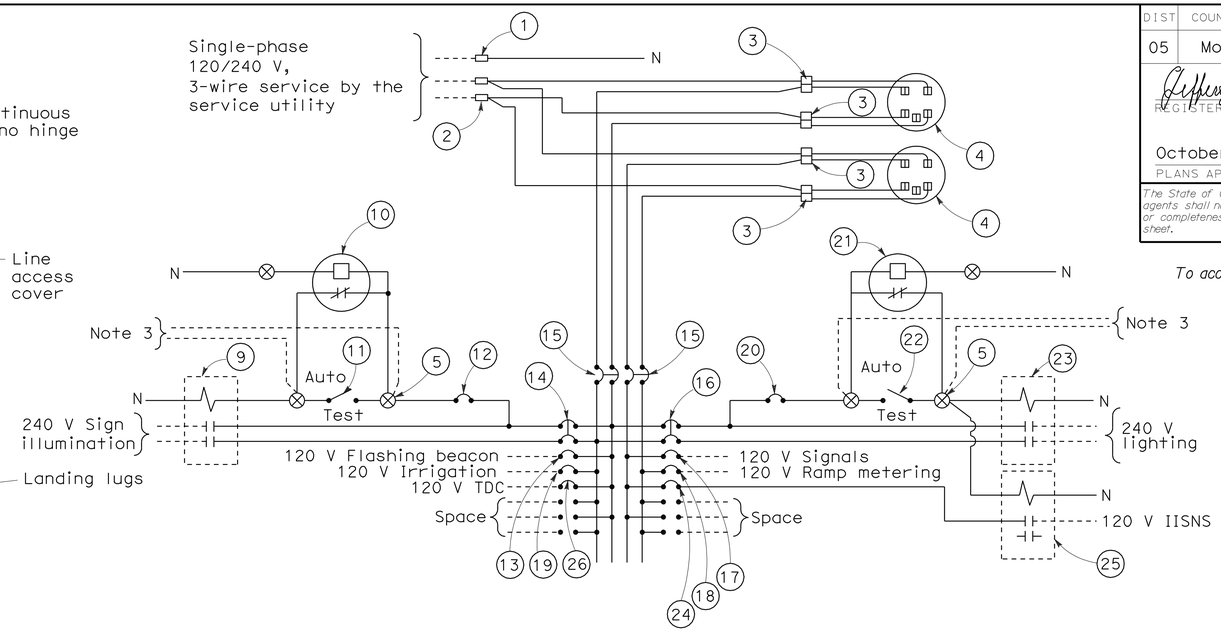

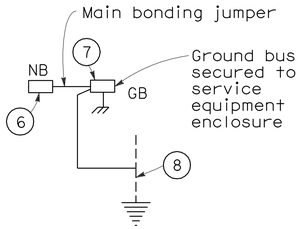

120/240 V SERVICE WIRING DIAGRAM (TYPICAL)

TYPE III-C SERVICE (120/240 V) EQUIPMENT LEGEND

ITEM No.	COMPONENT	NAME PLATE DESCRIPTION	ITEM No.	COMPONENT	NAME PLATE DESCRIPTION
1	Neutral lug		14	30 A, 240 V, 2P, CB	Sign Illumination
2	Landing lug (Note 6)		15	100 A, 240 V, 2P, CB	Main Breaker
3	Test bypass facility		16	30 A, 240 V, 2P, CB	Lighting
4	Meter socket and support		17	50 A, 120 V, 1P, CB	Signals
5	Terminal blocks		18	30 A, 120 V, 1P, CB	Ramp Metering
6	Neutral bus		19	20 A, 120 V, 1P, CB	Irrigation
7	Ground bus		20	15 A, 120 V, 1P, CB	Lighting Control
8	Grounding electrode		21	Photoelectric unit (Note 7)	
9	30 A, 2PNO, Contactor	Sign Illumination	22	15 A, 1P, Test switch	Lighting Control
10	Photoelectric unit (Note 7)		23	60 A, 2PNO Contactor	Lighting
11	15 A, 1P, Test switch	Sign Illumination Test Switch	24	15 A, 120 V, 1P, CB	IISNS
12	15 A, 120 V, 1P, CB	Sign Illumination Control	25	30 A, 2PNO Contactor	IISNS
13	15 A, 120 V, 1P, CB	Flashing Beacon	26	20 A, 120 V, 1P, CB	Telephone Demarcation Cabinet

NOTES: (FOR SERVICE EQUIPMENT ENCLOSURE)

1. Voltage ratings of service equipment shall conform to the service voltages indicated on the plans.
2. Unless otherwise indicated on the plans, service equipment items shall be provided for each service equipment enclosure as shown.
3. Connect to remote test switch mounted on lighting standards, sign post or structure when required.
4. Items No. 1 and 6 shall be isolated from the service equipment enclosure.
5. Meter sockets shall be 5 clip type.
6. The landing lug shall be suitable for multiple conductors.
7. Type V photoelectric control shall be used unless otherwise indicated on the plans.

STATE OF CALIFORNIA
DEPARTMENT OF TRANSPORTATION

ELECTRICAL SYSTEMS (SERVICE EQUIPMENT AND TYPICAL WIRING DIAGRAM TYPE III-C SERIES)

NO SCALE

RSP ES-2F DATED OCTOBER 5, 2007 SUPERCEDES STANDARD PLAN ES-2F DATED MAY 1, 2006 - PAGE 408 OF THE STANDARD PLANS BOOK DATED MAY 2006.

REVISED STANDARD PLAN RSP ES-2F

2006 REVISED STANDARD PLAN RSP ES-2F

8-17-07