Dist	COUNTY	ROUTE	POST MILES TOTAL PROJECT	SHEET No.	TOTAL SHEETS
05	SCr	1	R0.0/10.2	1	157

STATE OF CALIFORNIA

DEPARTMENT OF TRANSPORTATION

ACNH-P001(561)E

PROJECT PLANS FOR CONSTRUCTION ON

STATE HIGHWAY

IN SANTA CRUZ COUNTY IN WATSONVILLE AND APTOS FROM PAJARO RIVER BRIDGE TO NORTH APTOS UNDERPASS

TO BE SUPPLEMENTED BY STANDARD PLANS DATED MAY 2006

INDEX OF PLANS

SHEET No.	DESCRIPTION
1	TITLE AND LOCATION MAP
2-4	TYPICAL CROSS SECTIONS
5-69	CONSTRUCTION DETAILS
70-73	Temp WATER POLLUTION CONTROL PLAN AND QUANTITIES
74-75	EROSION CONTROL DETAILS AND QUANTITIES
76-81	DRAINAGE DETAILS AND QUANTITIES
82-83	CONSTRUCTION AREA SIGNS
84-87	TRAFFIC HANDLING PLANS, DETAILS AND QUANTITIES
88-91	PAVEMENT DELINEATION QUANTITIES
92-109	SIGN PLANS, DETAILS AND QUANTITIES
110-115	SUMMARY OF QUANTITIES
116	MODIFY WIRELESS VEHICLE DETECTION SYSTEM
117-118	INDUCTIVE LOOP DETECTORS
119	MODIFY LIGHTING
120-154	REVISED AND NEW STANDARD PLANS

STRUCTURE PLANS

155-157 ROUTE 152/1 CONNECTOR OVERCROSSING Br No. 36-0084F

THE STANDARD PLANS LIST APPLICABLE TO THIS CONTRACT IS INCLUDED IN THE NOTICE TO BIDDERS AND SPECIAL PROVISIONS BOOK.

LOCATION MAP

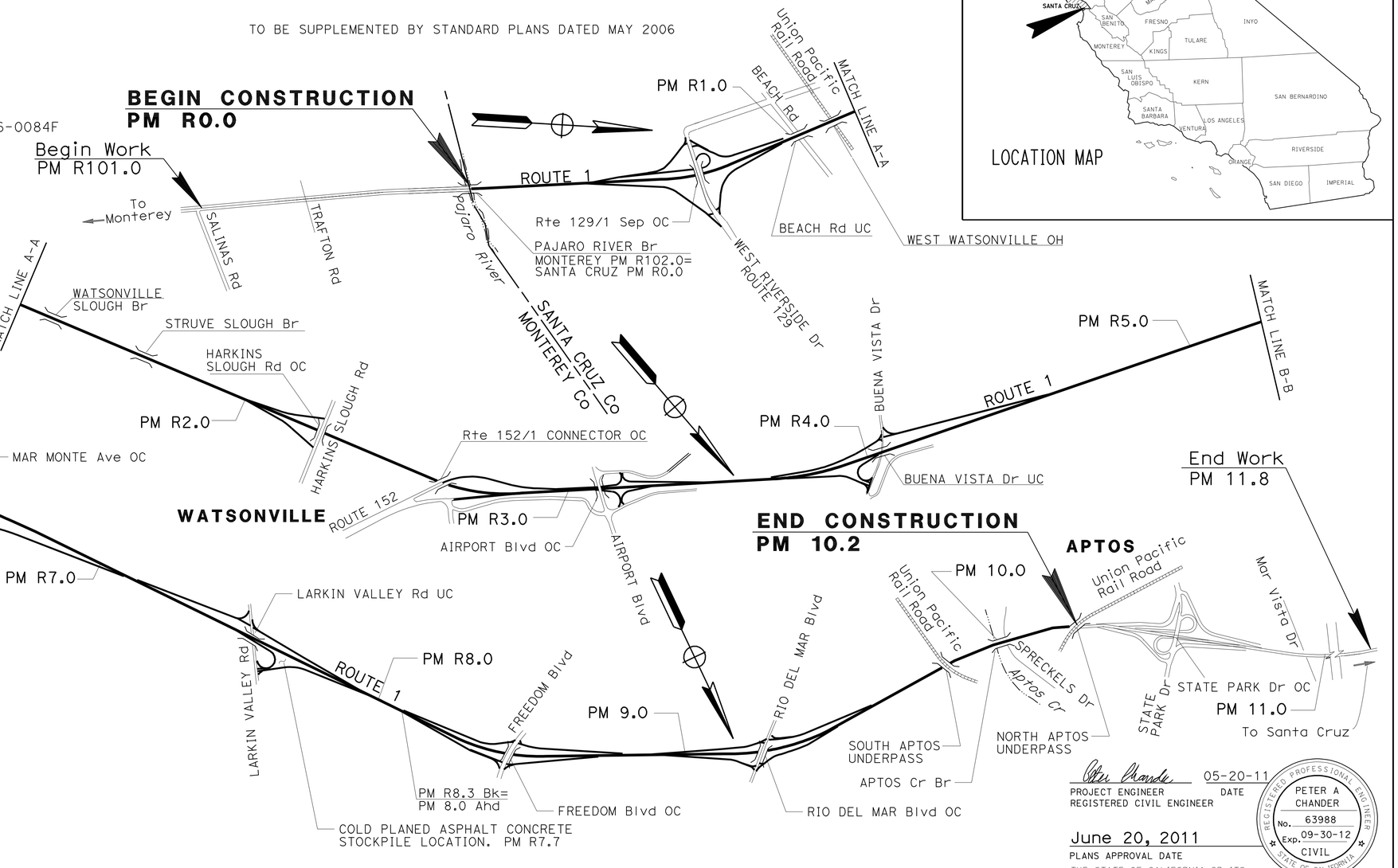

NO SCALE

THE CONTRACTOR SHALL POSSESS THE CLASS (OR CLASSES) OF LICENSE AS SPECIFIED IN THE "NOTICE TO BIDDERS."

PROJECT MANAGER: LUIS DUAZO

DESIGN ENGINEER: ROBERTO BANDA

05-20-11
PROJECT ENGINEER DATE
REGISTERED CIVIL ENGINEER

June 20, 2011
PLANS APPROVAL DATE

REGISTERED PROFESSIONAL ENGINEER — PETER A CHANDER No. 63988 Exp. 09-30-12 CIVIL — STATE OF CALIFORNIA

THE STATE OF CALIFORNIA OR ITS OFFICERS OR AGENTS SHALL NOT BE RESPONSIBLE FOR THE ACCURACY OR COMPLETENESS OF SCANNED COPIES OF THIS PLAN SHEET.

CONTRACT No.	05-0M7504
PROJECT ID	0500020234

LAST REVISION 05-20-11 DATE PLOTTED => 12-AUG-2011 TIME PLOTTED => 11:07

Dist	COUNTY	ROUTE	POST MILES TOTAL PROJECT	SHEET No.	TOTAL SHEETS
05	SCr	1	R0.0/10.2	2	157

REGISTERED CIVIL ENGINEER 5-20-11 DATE

6-20-11
PLANS APPROVAL DATE

REGISTERED PROFESSIONAL ENGINEER PETER A CHANDER No. 63988 Exp. 09-30-12 CIVIL STATE OF CALIFORNIA

THE STATE OF CALIFORNIA OR ITS OFFICERS OR AGENTS SHALL NOT BE RESPONSIBLE FOR THE ACCURACY OR COMPLETENESS OF SCANNED COPIES OF THIS PLAN SHEET.

NOTES:

1. DIMENSIONS OF THE PAVEMENT STRUCTURES (STRUCTURAL SECTIONS) ARE SUBJECT TO TOLERANCE SPECIFIED IN THE STANDARD SPECIFICATIONS.
2. SUPERELEVATION AS SHOWN OR AS DIRECTED BY THE ENGINEER.
3. FOR ACCURATE RIGHT OF WAY DATA, CONTACT RIGHT OF WAY ENGINEERING AT THE DISTRICT OFFICE.
4. SAFETY EDGE SHALL BE CONSTRUCTED AS PER Sht C-4 EXCEPT AT THE FOLLOWING LOCATIONS: a) CURBS AND DIKES b) THRIE BEAM AND Conc BARRIERS WITHIN 3′ OF EP
5. SEE Sht C-1 FOR TYPE OF HMA DIKE AND PLACEMENT DETAILS

ABBREVIATIONS:

SB - IMPORTED MATERIAL (Shld BACKING)

RS - RUMBLE STRIP (SEE Std PLAN FOR PLACEMENT DETAIL)

SM - SELECTED MATERIAL

TRAVELED WAY WIDTH TABLE

SB Rte 1	W	NB Rte 1
PM		PM
R0.04 - R5.40	2-LANE, 12′ EACH	R0.04 - R3.33
R5.40 - R7.44	3-LANE, 12′ EACH	R3.33 - R5.83
R7.44 - 10.23*	2-LANE, 12′ EACH	R5.83 - 10.23*

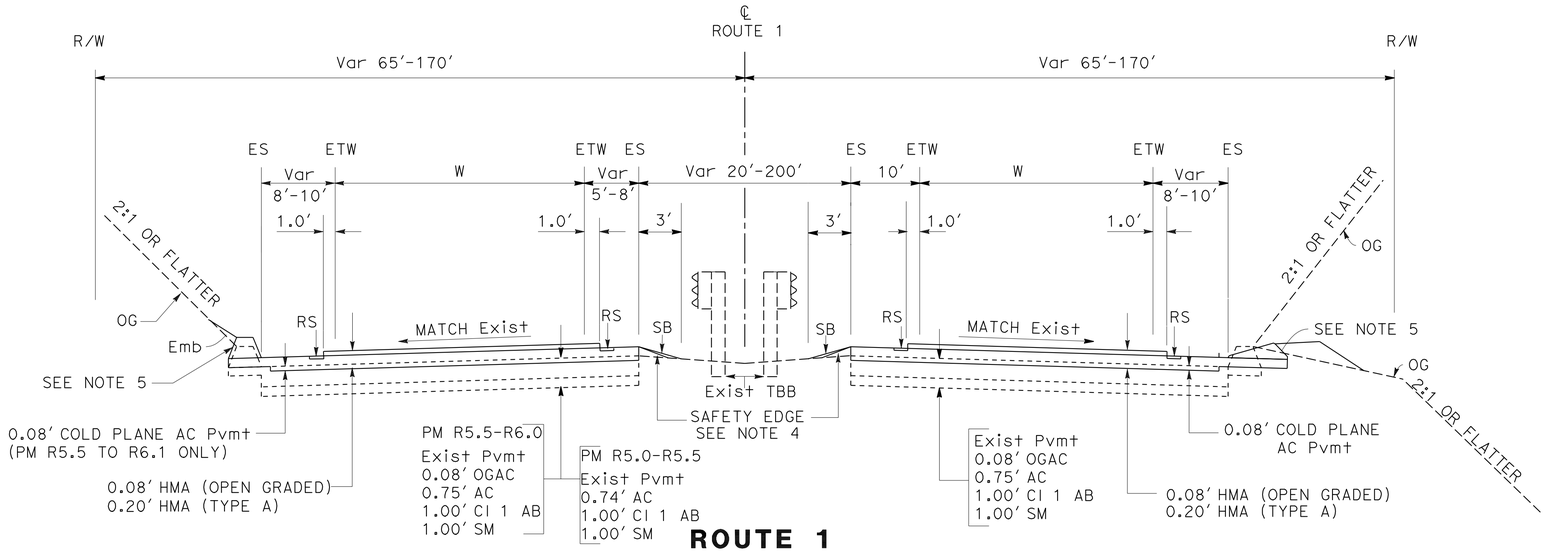

ROUTE 1

SOUTHBOUND
PM R5.0 TO R6.1

NORTHBOUND
PM R3.00 TO R4.30

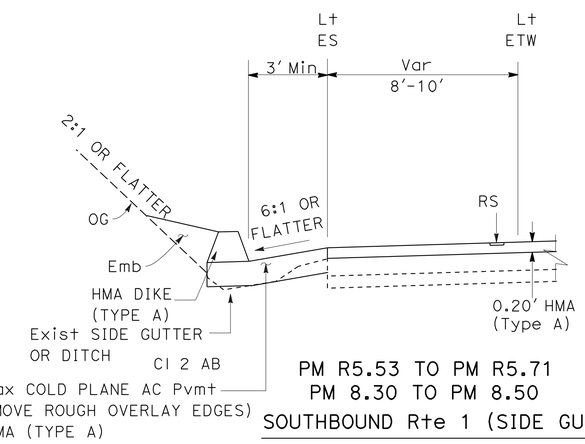

PM R5.53 TO PM R5.71
PM 8.30 TO PM 8.50

SOUTHBOUND Rte 1 (SIDE GUTTER)

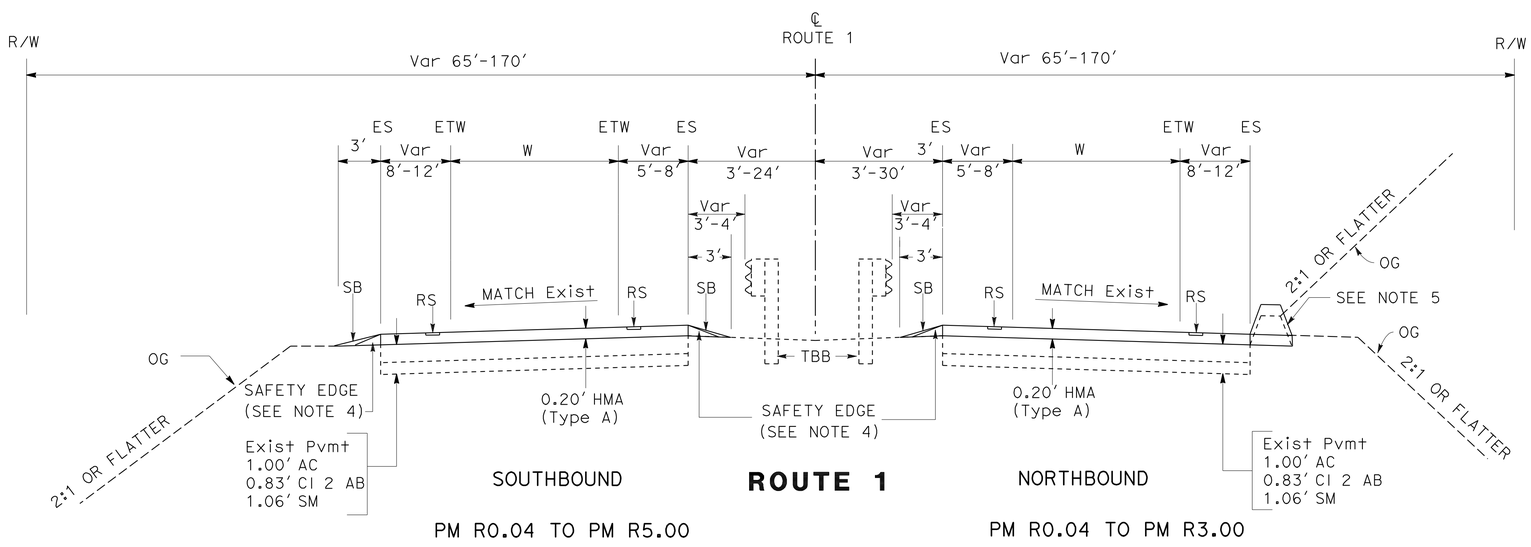

SOUTHBOUND

ROUTE 1

NORTHBOUND

PM R0.04 TO PM R5.00

PM R0.04 TO PM R3.00

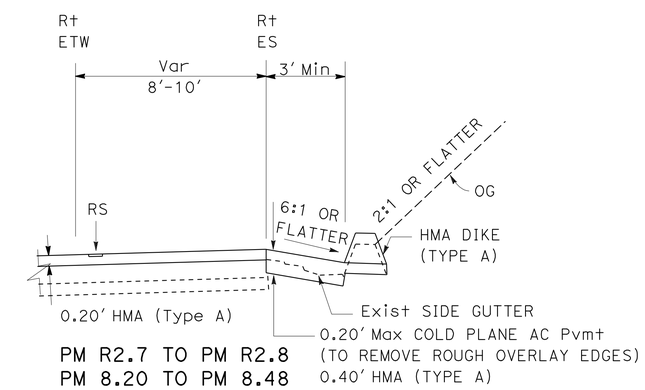

PM R2.7 TO PM R2.8
PM 8.20 TO PM 8.48
PM 9.04 TO PM 9.23

NORTHBOUND Rte 1 (SIDE GUTTER)

* PM EQUATION
R8.3 Bk = 8.0 Ahd

EXISTING UTILITY FACILITIES HAVE NOT BEEN PLOTTED ON THESE PLANS

TYPICAL CROSS SECTIONS

NO SCALE

X-1

STATE OF CALIFORNIA - DEPARTMENT OF TRANSPORTATION
Caltrans
06-DESIGN

FUNCTIONAL SUPERVISOR: ROBERTO BANDA
CALCULATED-DESIGNED BY: PETER CHANDER
CHECKED BY: HAL KENYON
REVISED BY
DATE REVISED

LAST REVISION 05-20-11
DATE PLOTTED => 12-AUG-2011
TIME PLOTTED => 11:07

Dist	COUNTY	ROUTE	POST MILES TOTAL PROJECT	SHEET No.	TOTAL SHEETS
05	SCr	1	R0.0/10.2	3	157

REGISTERED CIVIL ENGINEER 5-20-11 DATE

6-20-11
PLANS APPROVAL DATE

REGISTERED PROFESSIONAL ENGINEER PETER A CHANDER No. 63988 Exp. 09-30-12 CIVIL STATE OF CALIFORNIA

THE STATE OF CALIFORNIA OR ITS OFFICERS OR AGENTS SHALL NOT BE RESPONSIBLE FOR THE ACCURACY OR COMPLETENESS OF SCANNED COPIES OF THIS PLAN SHEET.

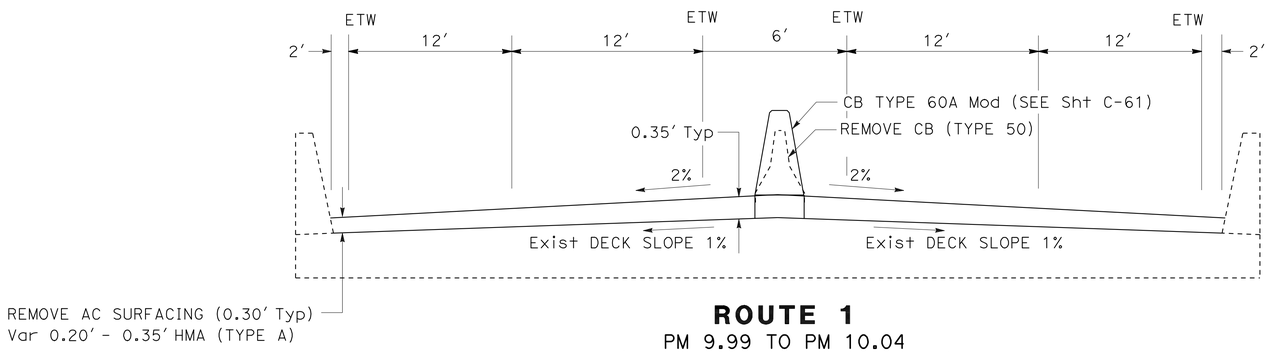

ROUTE 1
PM 9.99 TO PM 10.04
(APTOS CREEK BRIDGE Br No. 36-11)

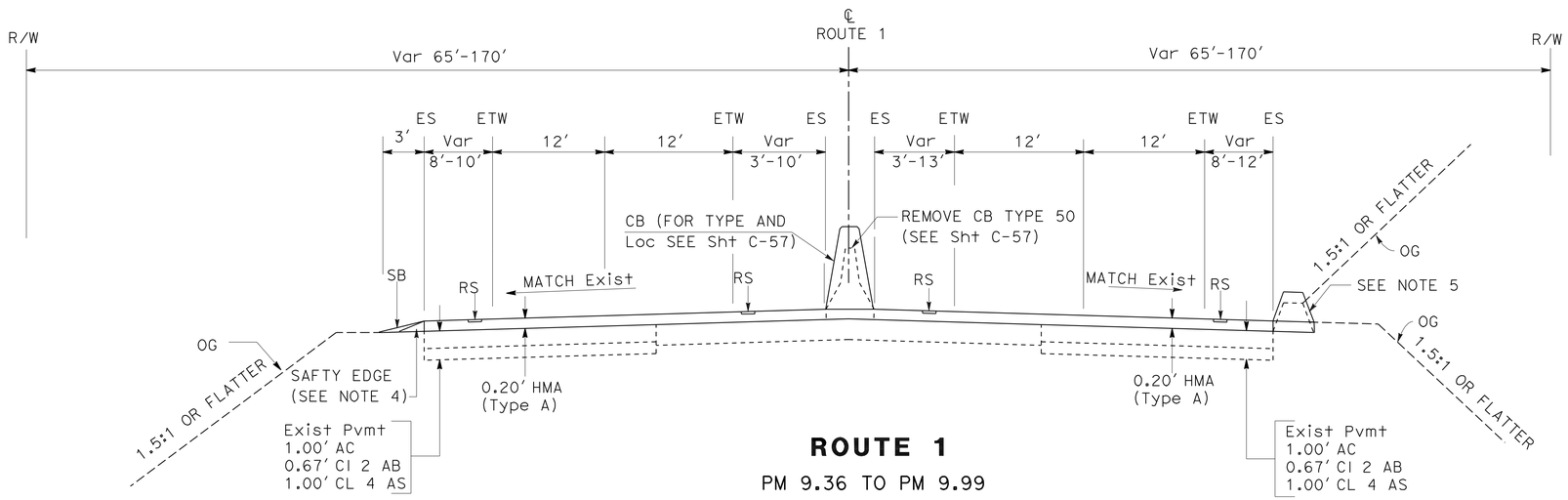

ROUTE 1
PM 9.36 TO PM 9.99
PM 10.04 TO PM 10.23

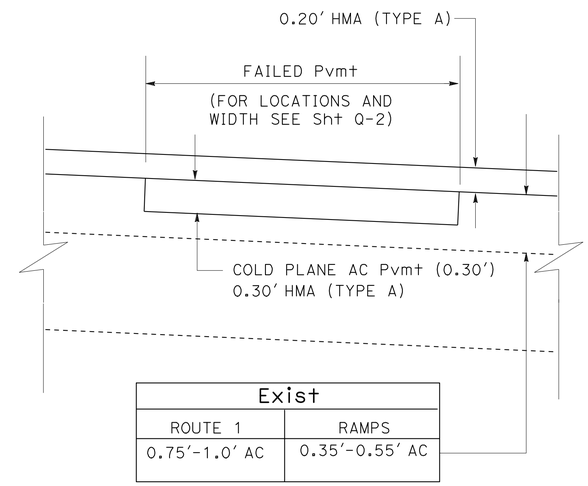

Exist	
ROUTE 1	RAMPS
0.75′-1.0′ AC	0.35′-0.55′ AC

ROUTE 1 AND RAMPS
REPAIR FAILED Pvmt AREAS

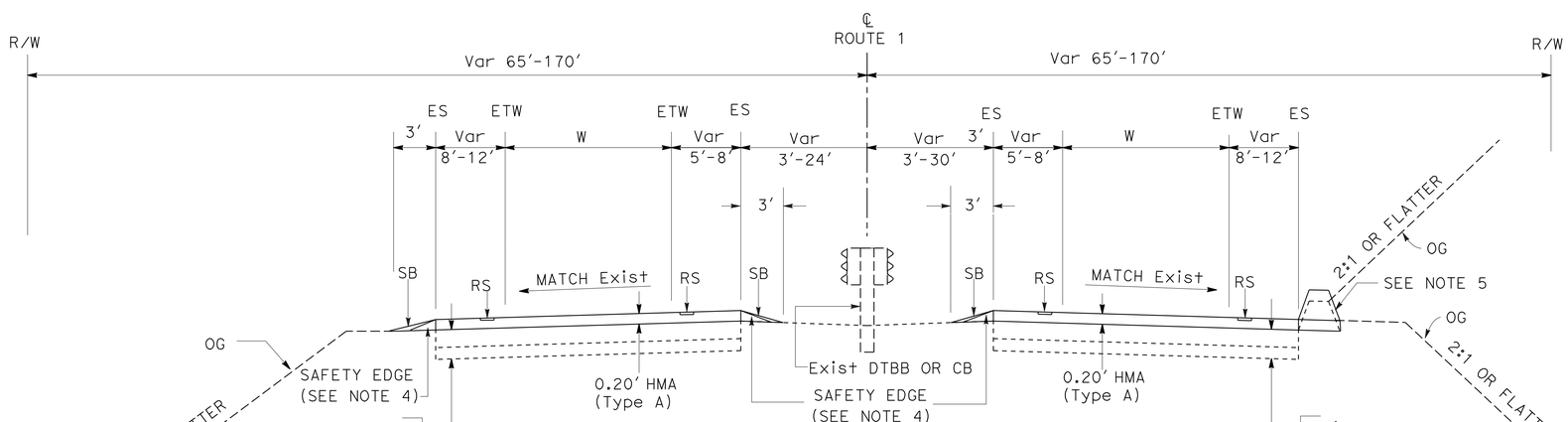

SOUTHBOUND
PM R6.10 TO PM 9.40 *

ROUTE 1

NORTHBOUND
PM R4.30 TO PM 9.40 *

* PM EQUATION
R8.26 Bk= 8.06 Ahd

EXISTING UTILITY FACILITIES HAVE NOT BEEN PLOTTED ON THESE PLANS

TYPICAL CROSS SECTIONS

NO SCALE

X-2

REVISED BY | DATE REVISED
MICAELA GARCIA | PETER CHANDER
CALCULATED-DESIGNED BY | CHECKED BY
FUNCTIONAL SUPERVISOR: ROBERTO BANDA

STATE OF CALIFORNIA - DEPARTMENT OF TRANSPORTATION
Caltrans 06-DESIGN

LAST REVISION 05-20-11 | DATE PLOTTED => 12-AUG-2011 | TIME PLOTTED => 11:07

Dist	COUNTY	ROUTE	POST MILES TOTAL PROJECT	SHEET No.	TOTAL SHEETS
05	SCr	1	R0.0/10.2	4	157

REGISTERED CIVIL ENGINEER 5-20-11 DATE

6-20-11
PLANS APPROVAL DATE

REGISTERED PROFESSIONAL ENGINEER PETER A CHANDER No. 63988 Exp. 09-30-12 CIVIL STATE OF CALIFORNIA

THE STATE OF CALIFORNIA OR ITS OFFICERS OR AGENTS SHALL NOT BE RESPONSIBLE FOR THE ACCURACY OR COMPLETENESS OF SCANNED COPIES OF THIS PLAN SHEET.

LEGEND

* ONLY ON RAMPS WITH Exist SIDE GUTTER

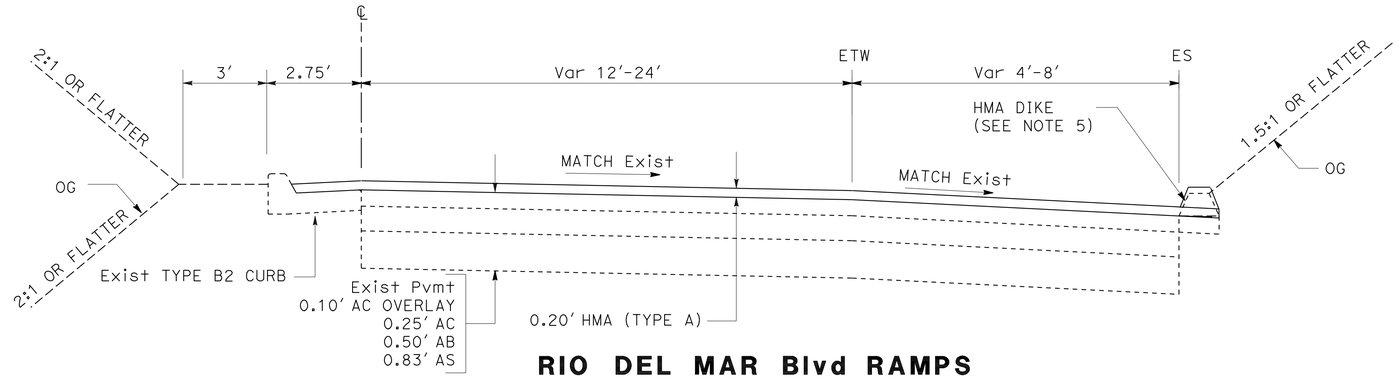

RIO DEL MAR Blvd RAMPS

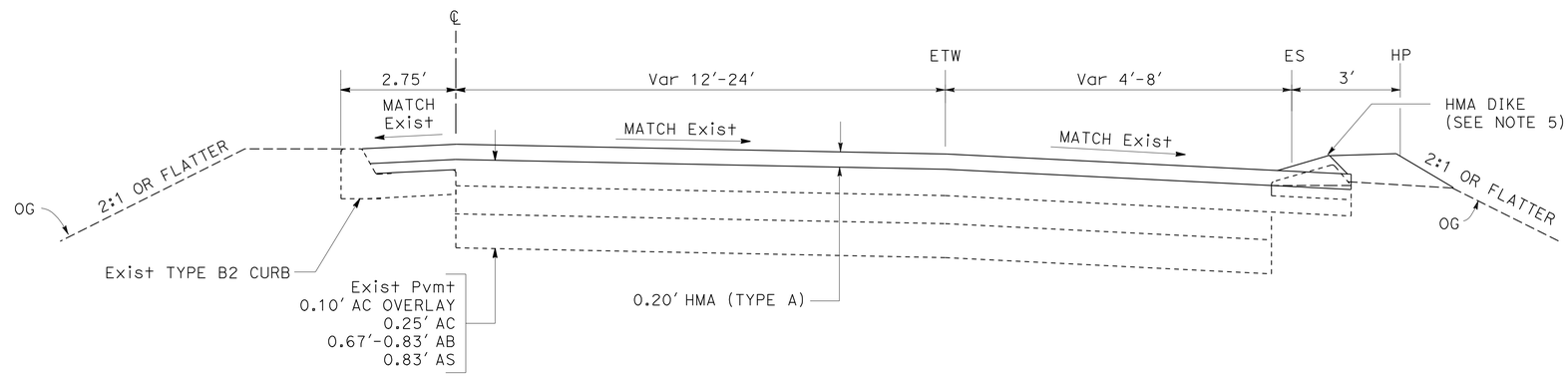

ROUTE 1/129 SEPARATION RAMPS

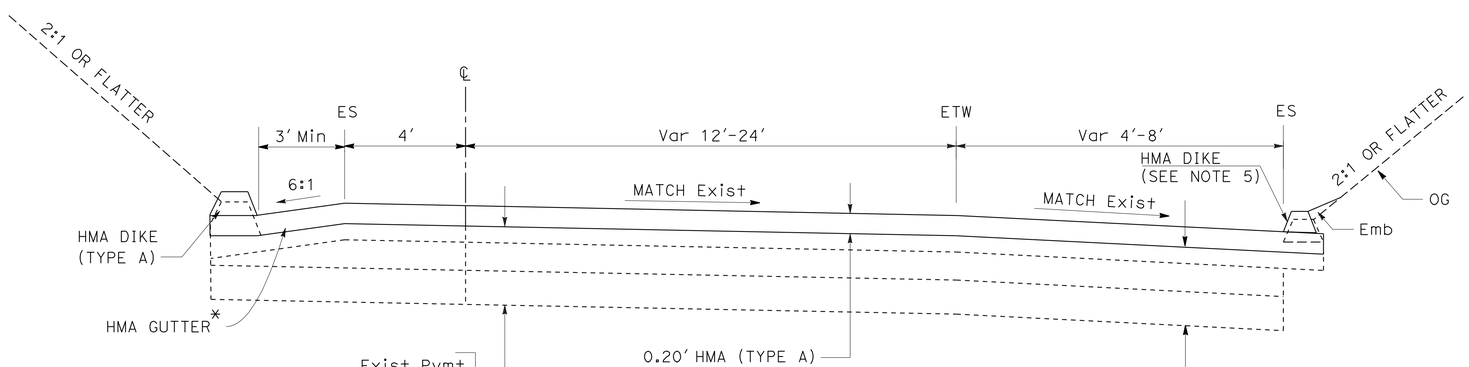

RAMPS

(ALL RAMPS EXCEPT THOSE SHOWN ABOVE)

TYPICAL CROSS SECTIONS

NO SCALE

X-3

EXISTING UTILITY FACILITIES HAVE NOT BEEN PLOTTED ON THESE PLANS

STATE OF CALIFORNIA - DEPARTMENT OF TRANSPORTATION
Caltrans® 06-DESIGN

FUNCTIONAL SUPERVISOR: ROBERTO BANDA
CALCULATED-DESIGNED BY: PETER CHANDER
CHECKED BY: HAL KENYON
REVISED BY / DATE REVISED

LAST REVISION 05-20-11 | DATE PLOTTED => 12-AUG-2011 TIME PLOTTED => 11:07

Dist	COUNTY	ROUTE	POST MILES TOTAL PROJECT	SHEET No.	TOTAL SHEETS
05	SCr	1	R0.0/10.2	5	157

REGISTERED CIVIL ENGINEER 5-20-11 DATE

PLANS APPROVAL DATE 6-20-11

REGISTERED PROFESSIONAL ENGINEER PETER A CHANDER No. 63988 Exp. 09-30-12 CIVIL STATE OF CALIFORNIA

THE STATE OF CALIFORNIA OR ITS OFFICERS OR AGENTS SHALL NOT BE RESPONSIBLE FOR THE ACCURACY OR COMPLETENESS OF SCANNED COPIES OF THIS PLAN SHEET.

LEGEND

- TFESA — Temp FENCE (TYPE ESA)
- RUMBLE STRIP (Sht C-3)
- PLACE 0.20' HMA (TYPE A)
- COLD PLANE AC Pvmt 0.20' Max PLACE 0.20' HMA (TYPE A)
- REMOVE CONCRETE
- CONCRETE ANCHOR BLOCK (CAB)
- MBGR TERMINAL SYSTEM
- REMOVE GORE AREA (ROADWAY Exc) PLACE HMA SURFACING
- REMOVE GORE AREA (ROADWAY Exc) PLACE PCC SURFACING
- ASPHALTIC PLUG JOINT SEAL (Sht C-64)

G-XX RECONSTRUCT GORE AREA Loc No.

NOTES:

1. UNLESS OTHERWISE SHOWN, REMOVE ALL EXISTING DIKE AND PLACE HMA DIKE AS PER SIDE-SLOPE CONDITIONS SHOWN BELOW
2. UNLESS OTHERWISE SHOWN, PLACE HMA DIKE ONLY AT LOCATIONS WHERE Exist DIKE IS REMOVED
3. FOR DIKE PLACEMENT UNDER AND IN FRONT OF MBGR AND TERMINAL SYSTEMS SEE Sht C-16 TO C-41, AND Std PLANS
4. ALL DRAINAGE INLETS WITHIN PAVEMENT LIMITS SHALL BE ADJUSTED TO GRADE AS PER Sht C-4. ADJUST DRAINAGE INLETS IS NOT SHOWN IN THE DETAIL SHEETS C-5 TO C-41
5. FOR ACCURATE PLACEMENT OF Temp FENCE (TYPE ESA), SEE Sht C-21 AND C-31. FOR LIMITS OF OTHER ESA LOCATIONS SEE Sht C-18 AND C-29.

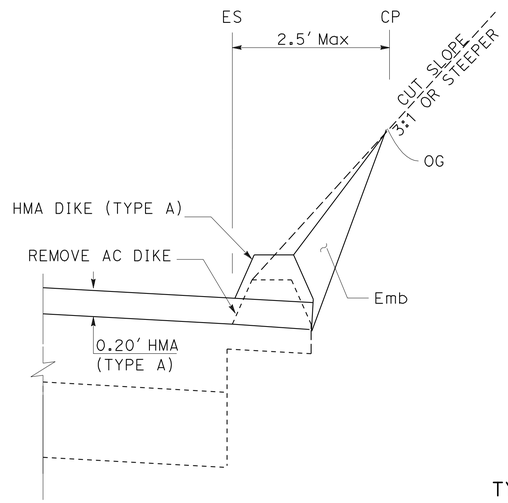

DETAIL-A

TYPICAL HMA DIKE PLACEMENT IN CUT SECTIONS WITH SIDE SLOPE 3:1 OR STEEPER

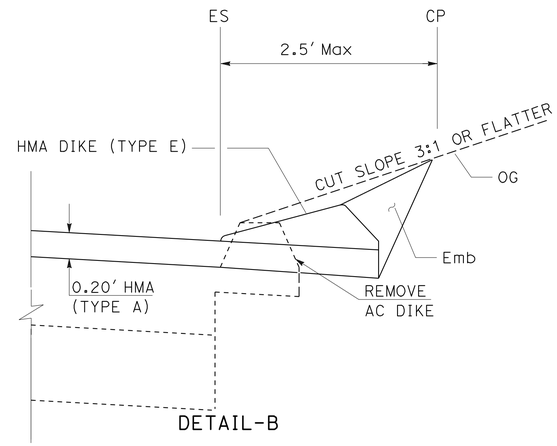

DETAIL-B

TYPICAL HMA DIKE PLACEMENT IN CUT SECTIONS WITH SIDE SLOPE 3:1 OR FLATTER

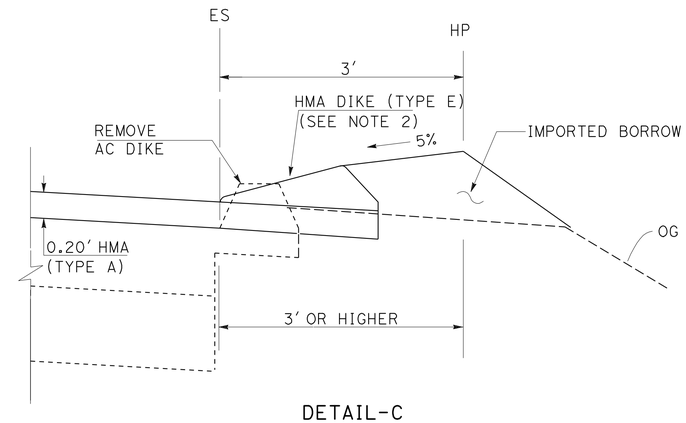

DETAIL-C

TYPICAL HMA DIKE PLACEMENT IN EMBANKMENT SECTIONS

HMA DIKE PLACEMENT DETAILS

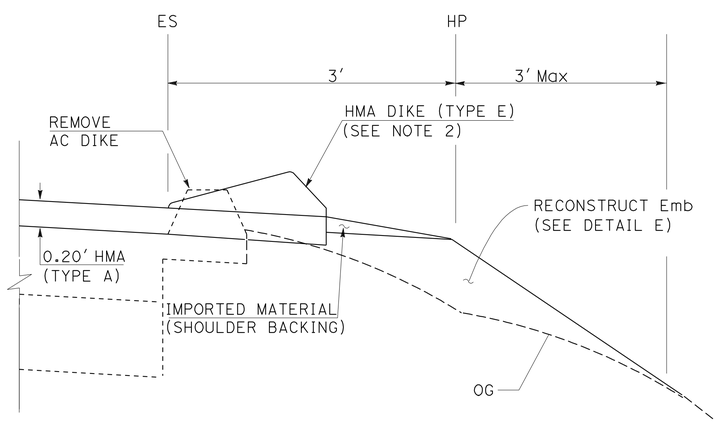

DETAIL-D

TYPICAL HMA DIKE PLACEMENT IN ERODING EMBANKMENT SECTIONS

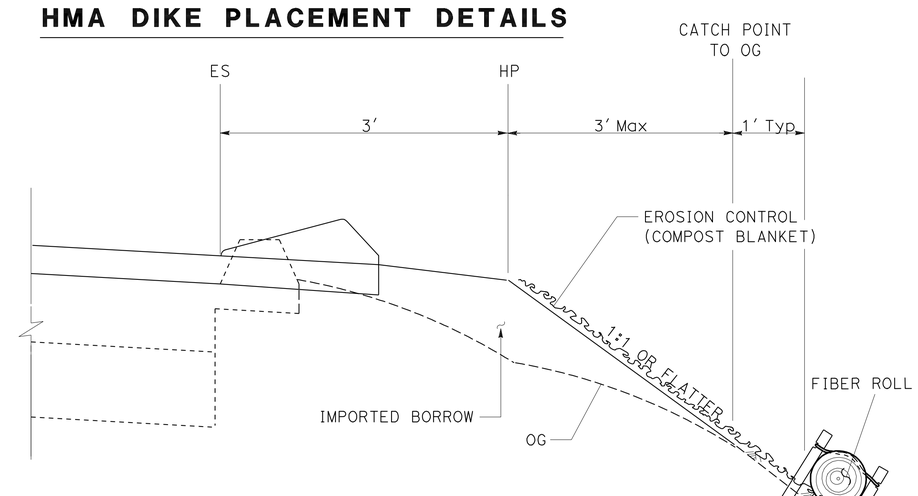

DETAIL-E

RECONSTRUCT EMBANKMENT DETAIL

(SEE Qty Sht FOR Loc)

EXISTING UTILITY FACILITIES HAVE NOT BEEN PLOTTED ON THESE PLANS

CONSTRUCTION DETAILS

NO SCALE

C-1

STATE OF CALIFORNIA - DEPARTMENT OF TRANSPORTATION

Caltrans 06-DESIGN

FUNCTIONAL SUPERVISOR: ROBERTO BANDA

CALCULATED-DESIGNED BY / CHECKED BY: HAL KENYON

REVISED BY / DATE REVISED: PETER CHANDER

LAST REVISION 05-20-11

DATE PLOTTED => 12-AUG-2011

TIME PLOTTED => 11:07

Dist	COUNTY	ROUTE	POST MILES TOTAL PROJECT	SHEET No.	TOTAL SHEETS
05	SCr	1	R0.0/10.2	6	157

Peter Chander 5-20-11
REGISTERED CIVIL ENGINEER DATE

6-20-11
PLANS APPROVAL DATE

REGISTERED PROFESSIONAL ENGINEER
PETER A CHANDER
No. 63988
Exp. 09-30-12
CIVIL
STATE OF CALIFORNIA

THE STATE OF CALIFORNIA OR ITS OFFICERS OR AGENTS SHALL NOT BE RESPONSIBLE FOR THE ACCURACY OR COMPLETENESS OF SCANNED COPIES OF THIS PLAN SHEET.

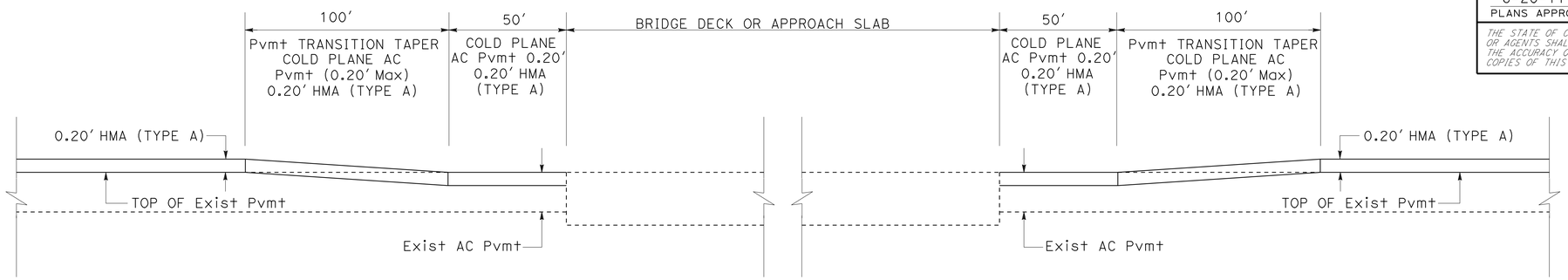

DETAIL A

TYPICAL LONGITUDINAL CONFORM AT Br APPROACHES

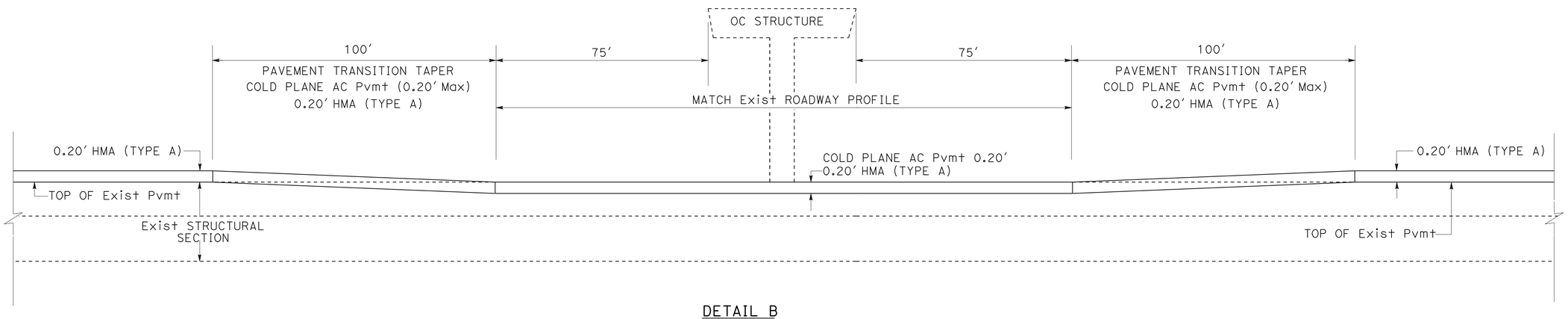

DETAIL B

TYPICAL HMA SURFACING UNDER OVERCROSSING STRUCTURES

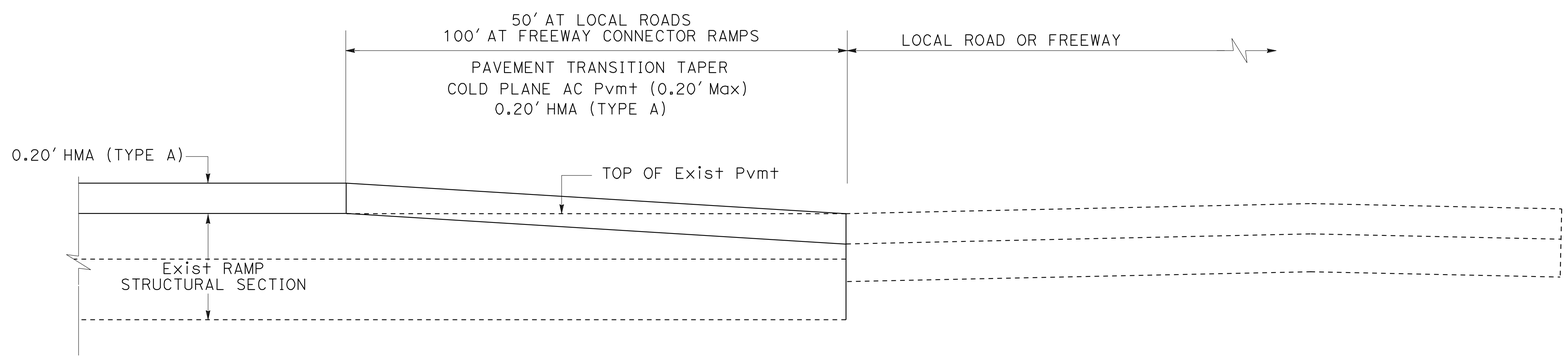

DETAIL C

TYPICAL RAMP CONFORM AT LOCAL ROADS AND FREEWAYS

EXISTING UTILITY FACILITIES HAVE NOT BEEN PLOTTED ON THESE PLANS

CONSTRUCTION DETAILS

NO SCALE

C-2

STATE OF CALIFORNIA - DEPARTMENT OF TRANSPORTATION
Caltrans
06-DESIGN

FUNCTIONAL SUPERVISOR: ROBERTO BANDA
CALCULATED-DESIGNED BY: PETER CHANDER
CHECKED BY: HAL KENYON
REVISED BY
DATE REVISED

LAST REVISION 05-20-11
DATE PLOTTED => 12-AUG-2011
TIME PLOTTED => 11:07

Dist	COUNTY	ROUTE	POST MILES TOTAL PROJECT	SHEET No.	TOTAL SHEETS
05	SCr	1	R0.0/10.2	7	157

REGISTERED CIVIL ENGINEER 5-20-11 DATE

6-20-11
PLANS APPROVAL DATE

REGISTERED PROFESSIONAL ENGINEER
PETER A CHANDER
No. 63988
Exp. 09-30-12
CIVIL
STATE OF CALIFORNIA

THE STATE OF CALIFORNIA OR ITS OFFICERS OR AGENTS SHALL NOT BE RESPONSIBLE FOR THE ACCURACY OR COMPLETENESS OF SCANNED COPIES OF THIS PLAN SHEET.

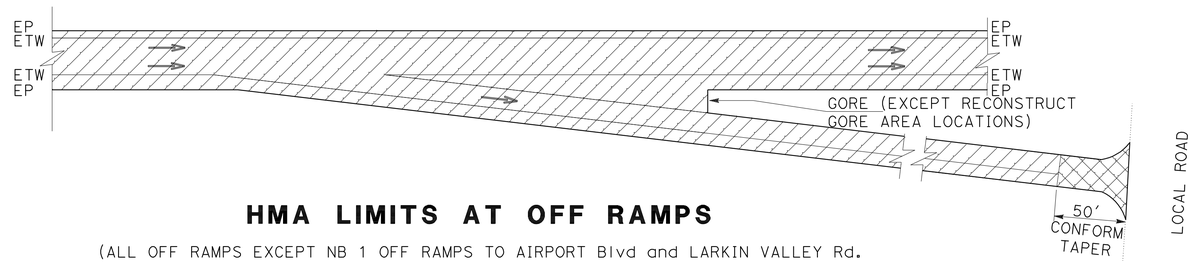

HMA LIMITS AT OFF RAMPS

(ALL OFF RAMPS EXCEPT NB 1 OFF RAMPS TO AIRPORT Blvd and LARKIN VALLEY Rd.
FOR AIRPORT Blvd SEE Sht C-8 AND FOR LARKIN VALLEY Rd SEE Sht C-12.)

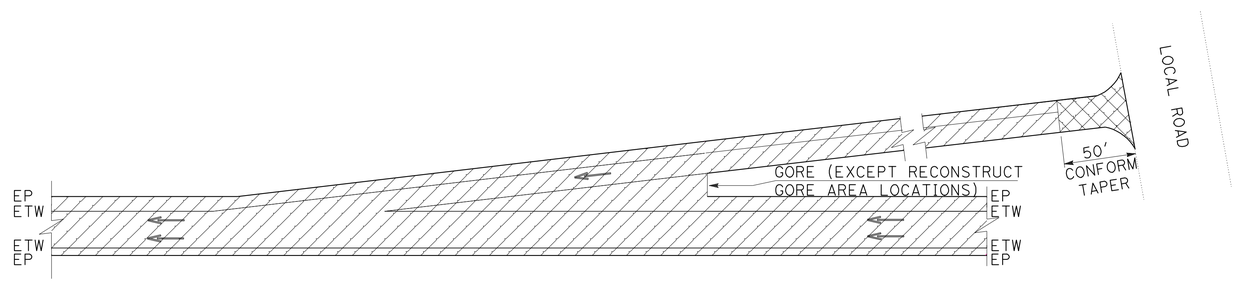

HMA LIMITS AT ON RAMPS

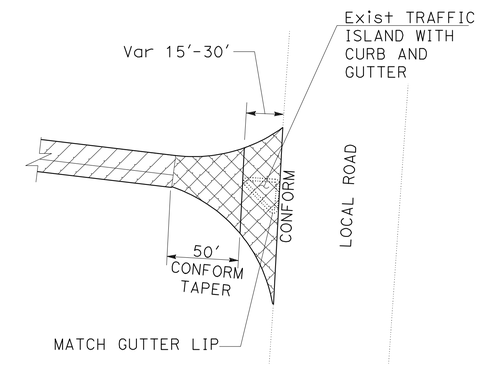

CONFORM DETAIL AT RAMPS WITH CURB AND GUTTER

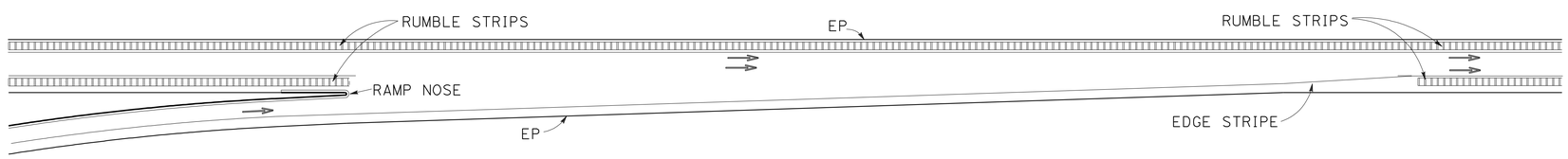

RUMBLE STRIP PLACEMENT NEAR ON RAMPS

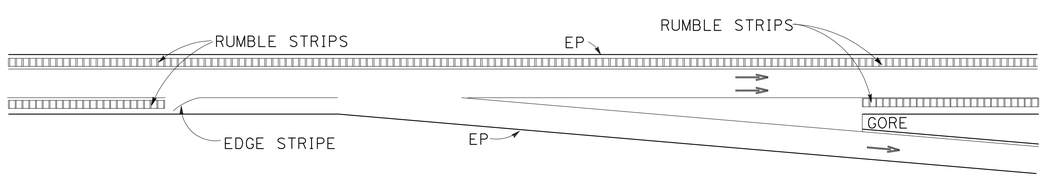

RUMBLE STRIP PLACEMENT NEAR OFF RAMPS

EXISTING UTILITY FACILITIES HAVE NOT BEEN PLOTTED ON THESE PLANS

CONSTRUCTION DETAILS

NO SCALE

C-3

REVISED BY | DATE REVISED
PETER CHANDER | HAL KENYON
CALCULATED-DESIGNED BY | CHECKED BY
FUNCTIONAL SUPERVISOR | ROBERTO BANDA
STATE OF CALIFORNIA - DEPARTMENT OF TRANSPORTATION
Caltrans® 06-DESIGN

LAST REVISION 05-20-11 | DATE PLOTTED => 12-AUG-2011 | TIME PLOTTED => 11:07

Dist	COUNTY	ROUTE	POST MILES TOTAL PROJECT	SHEET No.	TOTAL SHEETS
05	SCr	1	R0.0/10.2	8	157

REGISTERED CIVIL ENGINEER 5-20-11 DATE

6-20-11
PLANS APPROVAL DATE

REGISTERED PROFESSIONAL ENGINEER PETER A CHANDER No. 63988 Exp. 09-30-12 CIVIL STATE OF CALIFORNIA

THE STATE OF CALIFORNIA OR ITS OFFICERS OR AGENTS SHALL NOT BE RESPONSIBLE FOR THE ACCURACY OR COMPLETENESS OF SCANNED COPIES OF THIS PLAN SHEET.

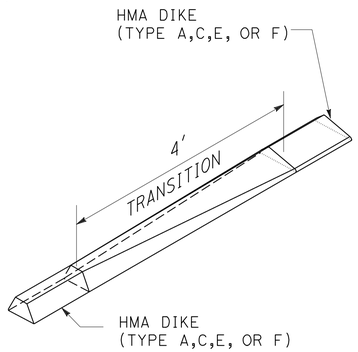

TYPICAL HMA DIKE TRANSITION

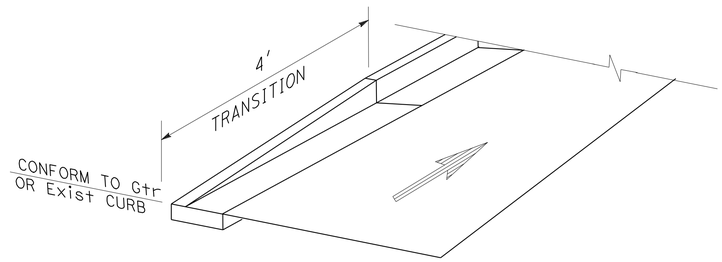

TYPICAL CURB (TYPE B4) END WHEN FACING TRAFFIC

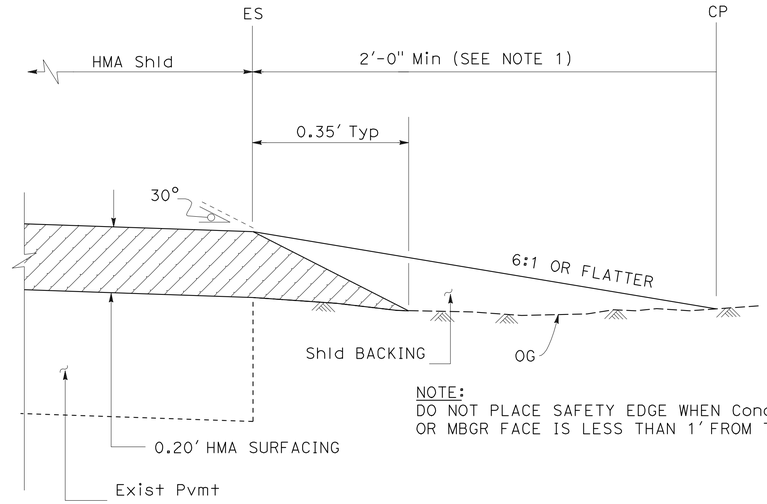

NOTE:
DO NOT PLACE SAFETY EDGE WHEN Conc BARRIER OR MBGR FACE IS LESS THAN 1' FROM THE ES

HOT MIX ASPHALT PAVING (SAFETY EDGE WITH SHOULDER BACKING)

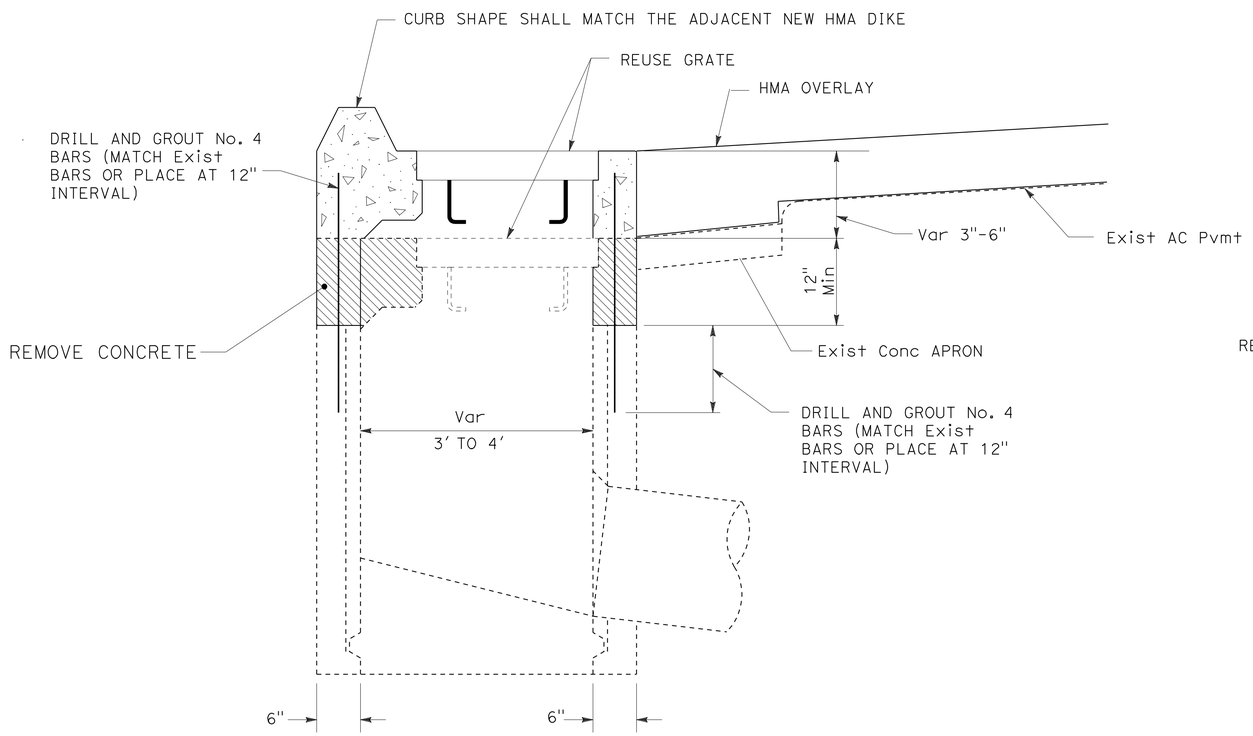

ADJUST TYPE G1 AND G2 INLET TO GRADE

(SEE Std PLANS FOR DETAILS NOT SHOWN)

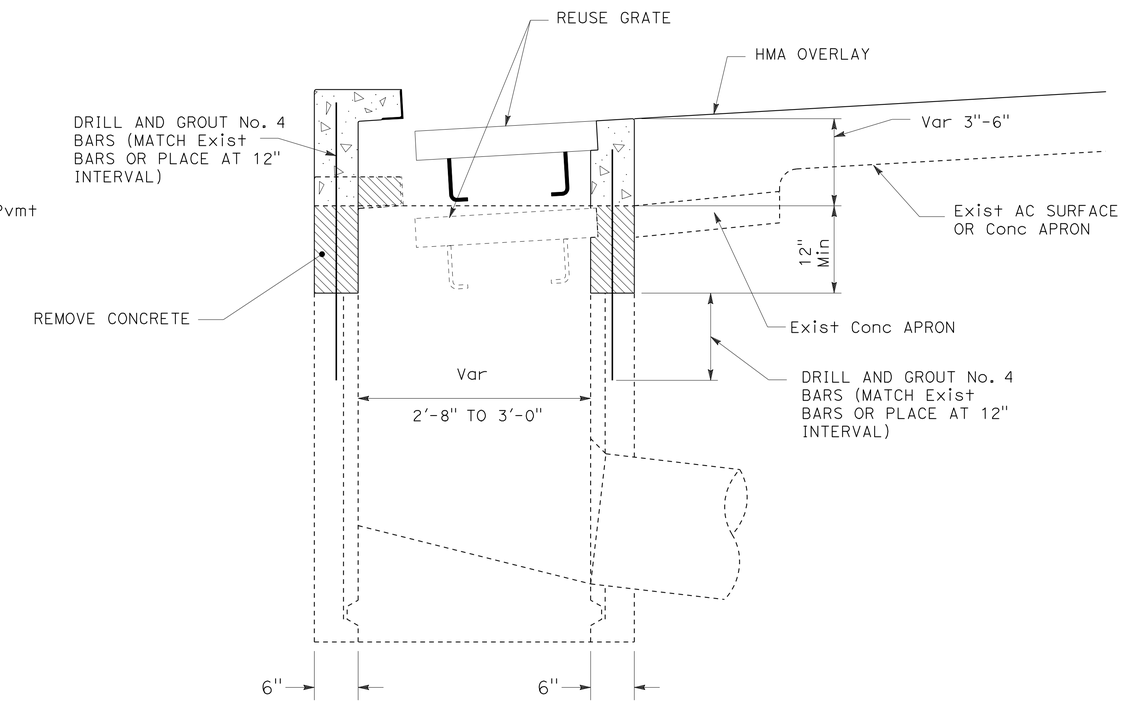

ADJUST TYPE GO INLET TO GRADE

(SEE Std PLANS FOR DETAILS NOT SHOWN)

EXISTING UTILITY FACILITIES HAVE NOT BEEN PLOTTED ON THESE PLANS

CONSTRUCTION DETAILS

NO SCALE

C-4

STATE OF CALIFORNIA - DEPARTMENT OF TRANSPORTATION
Caltrans
06-DESIGN
FUNCTIONAL SUPERVISOR: ROBERTO BANDA
CALCULATED-DESIGNED BY: PETER CHANDER
CHECKED BY: HAL KENYON
REVISED BY
DATE REVISED

LAST REVISION 05-20-11
DATE PLOTTED => 12-AUG-2011
TIME PLOTTED => 11:08

Dist	COUNTY	ROUTE	POST MILES TOTAL PROJECT	SHEET No.	TOTAL SHEETS
05	SCr	1	R0.0/10.2	9	157

REGISTERED CIVIL ENGINEER 5-20-11 DATE

6-20-11
PLANS APPROVAL DATE

REGISTERED PROFESSIONAL ENGINEER PETER A CHANDER No. 63988 Exp. 09-30-12 CIVIL STATE OF CALIFORNIA

THE STATE OF CALIFORNIA OR ITS OFFICERS OR AGENTS SHALL NOT BE RESPONSIBLE FOR THE ACCURACY OR COMPLETENESS OF SCANNED COPIES OF THIS PLAN SHEET.

NOTES:

Loc (x) MBGR CONSTRUCTION LOCATIONS (SEE Sht C-16 TO C-41)

Loc [Tx] THRIE BEAM BARRIER RECONSTRUCTION LOCATIONS (SEE Sht C-44)

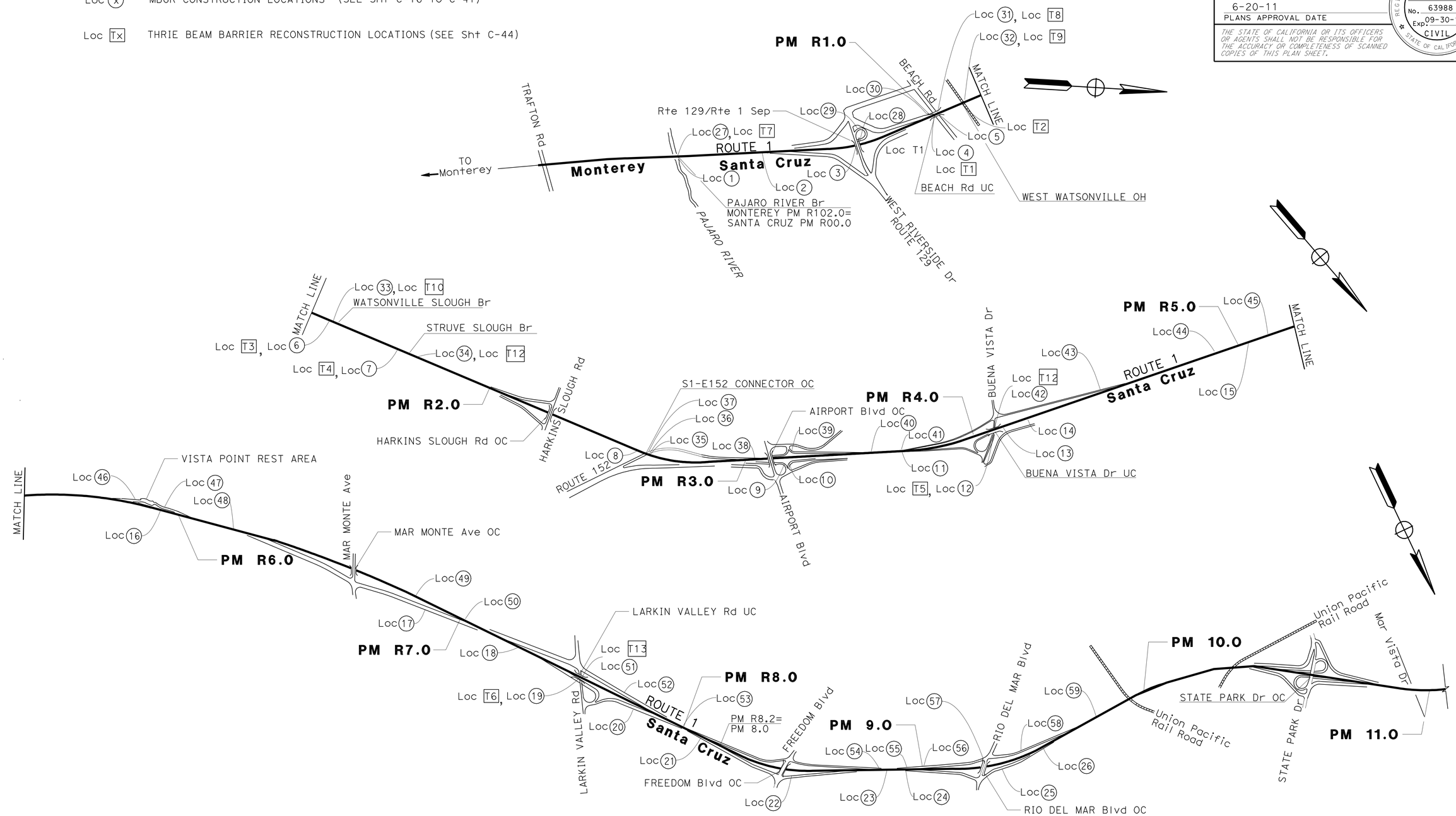

CONSTRUCTION DETAILS
(MBGR AND TBB Const LOCATIONS)

NO SCALE

C-5

EXISTING UTILITY FACILITIES HAVE NOT BEEN PLOTTED ON THESE PLANS

STATE OF CALIFORNIA - DEPARTMENT OF TRANSPORTATION
Caltrans® 06-DESIGN

FUNCTIONAL SUPERVISOR: ROBERTO BANDA
CALCULATED-DESIGNED BY: PETER CHANDER
CHECKED BY: HAL KENYON
REVISED BY
DATE REVISED

LAST REVISION 05-20-11
DATE PLOTTED => 12-AUG-2011
TIME PLOTTED => 11:08

Dist	COUNTY	ROUTE	POST MILES TOTAL PROJECT	SHEET No.	TOTAL SHEETS
05	SCr	1	R0.0/10.2	10	157

REGISTERED CIVIL ENGINEER 5-20-11 DATE

6-20-11
PLANS APPROVAL DATE

PROFESSIONAL ENGINEER REGISTERED PETER A CHANDER No. 63988 Exp. 09-30-12 CIVIL STATE OF CALIFORNIA

THE STATE OF CALIFORNIA OR ITS OFFICERS OR AGENTS SHALL NOT BE RESPONSIBLE FOR THE ACCURACY OR COMPLETENESS OF SCANNED COPIES OF THIS PLAN SHEET.

NOTES:

1. FOR ACCURATE RIGHT OF WAY DATA, CONTACT RIGHT OF WAY ENGINEERING AT THE DISTRICT OFFICE.

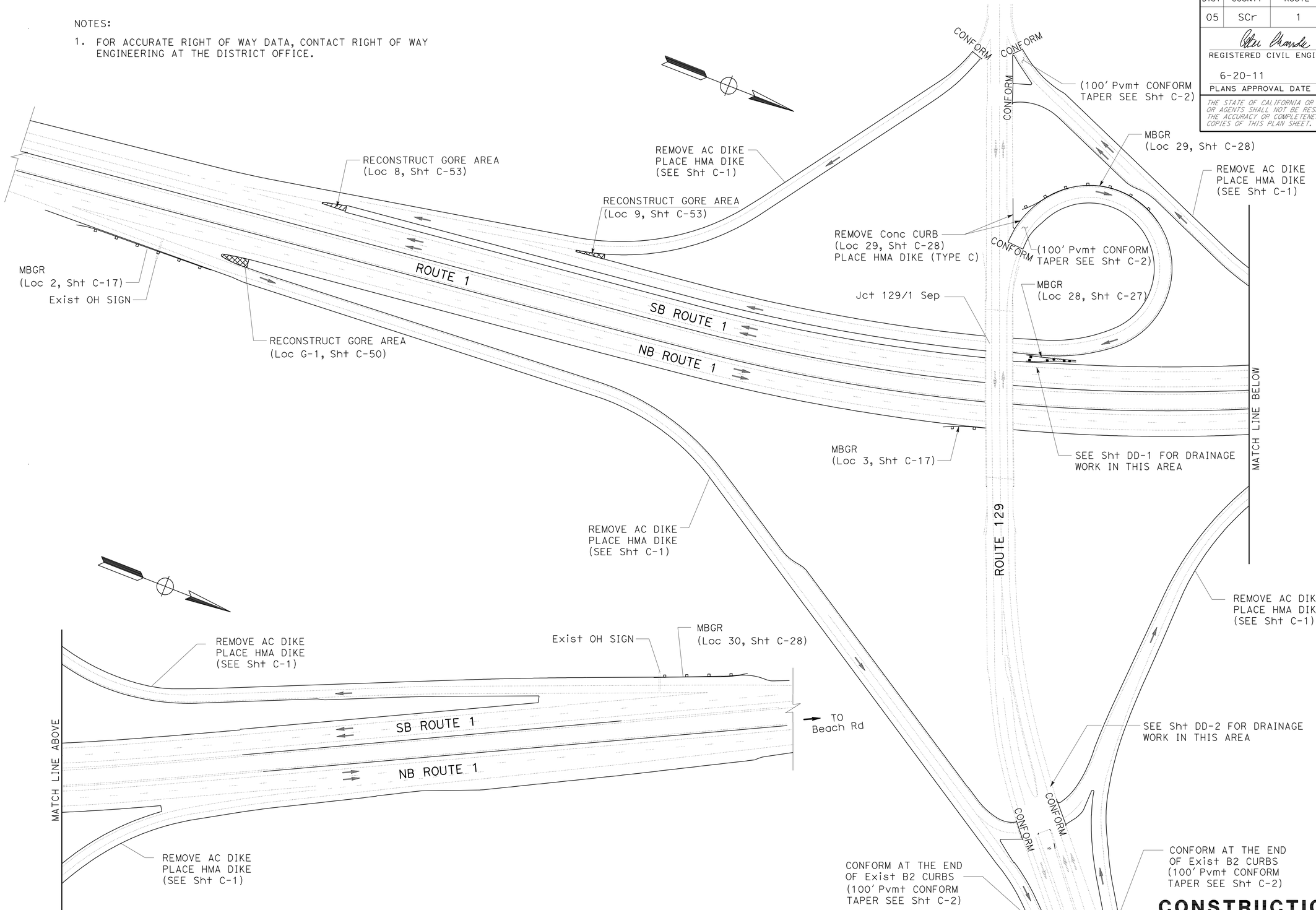

EXISTING UTILITY FACILITIES HAVE NOT BEEN PLOTTED ON THESE PLANS

CONSTRUCTION DETAILS
(ROUTE 1/129 SEPARATION)

NO SCALE

C-6

STATE OF CALIFORNIA - DEPARTMENT OF TRANSPORTATION
Caltrans® 06-DESIGN

FUNCTIONAL SUPERVISOR: ROBERTO BANDA
CALCULATED-DESIGNED BY: PETER CHANDER
CHECKED BY: HAL KENYON
REVISED BY
DATE REVISED

LAST REVISION 05-20-11
DATE PLOTTED => 12-AUG-2011
TIME PLOTTED => 11:08

Dist	COUNTY	ROUTE	POST MILES TOTAL PROJECT	SHEET No.	TOTAL SHEETS
05	SCr	1	R0.0/10.2	11	157

REGISTERED CIVIL ENGINEER 5-20-11 DATE

6-20-11
PLANS APPROVAL DATE

PROFESSIONAL ENGINEER REGISTERED PETER A CHANDER No. 63988 Exp 09-30-12 CIVIL STATE OF CALIFORNIA

THE STATE OF CALIFORNIA OR ITS OFFICERS OR AGENTS SHALL NOT BE RESPONSIBLE FOR THE ACCURACY OR COMPLETENESS OF SCANNED COPIES OF THIS PLAN SHEET.

NOTES:

1. FOR ACCURATE RIGHT OF WAY DATA, CONTACT RIGHT OF WAY ENGINEERING AT THE DISTRICT OFFICE.

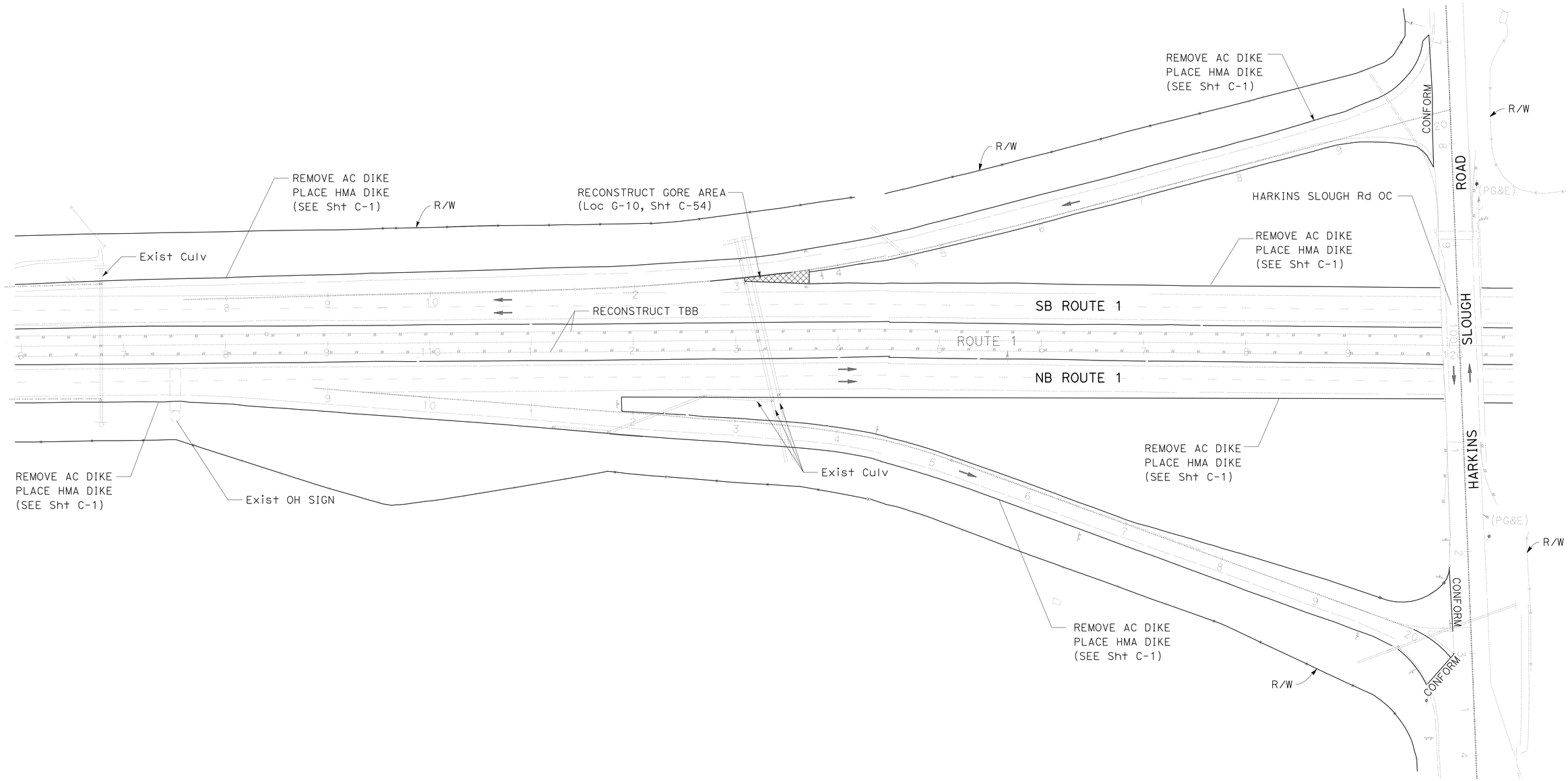

EXISTING UTILITY FACILITIES HAVE NOT BEEN PLOTTED ON THESE PLANS

CONSTRUCTION DETAILS
(HARKINS SLOUGH Rd)

NO SCALE

C-7

STATE OF CALIFORNIA - DEPARTMENT OF TRANSPORTATION
Caltrans® 06-DESIGN

FUNCTIONAL SUPERVISOR: ROBERTO BANDA

CALCULATED-DESIGNED BY: ARMANDO OROZCO
CHECKED BY: PETER CHANDER

REVISED BY
DATE REVISED

LAST REVISION 05-20-11
DATE PLOTTED => 12-AUG-2011
TIME PLOTTED => 11:08

Dist	COUNTY	ROUTE	POST MILES TOTAL PROJECT	SHEET No.	TOTAL SHEETS
05	SCr	1	R0.0/10.2	12	157

REGISTERED CIVIL ENGINEER 5-20-11 DATE

6-20-11
PLANS APPROVAL DATE

PROFESSIONAL ENGINEER REGISTERED PETER A CHANDER No. 63988 Exp 09-30-12 CIVIL STATE OF CALIFORNIA

THE STATE OF CALIFORNIA OR ITS OFFICERS OR AGENTS SHALL NOT BE RESPONSIBLE FOR THE ACCURACY OR COMPLETENESS OF SCANNED COPIES OF THIS PLAN SHEET.

NOTES:

1. FOR ACCURATE RIGHT OF WAY DATA, CONTACT RIGHT OF WAY ENGINEERING AT THE DISTRICT OFFICE.

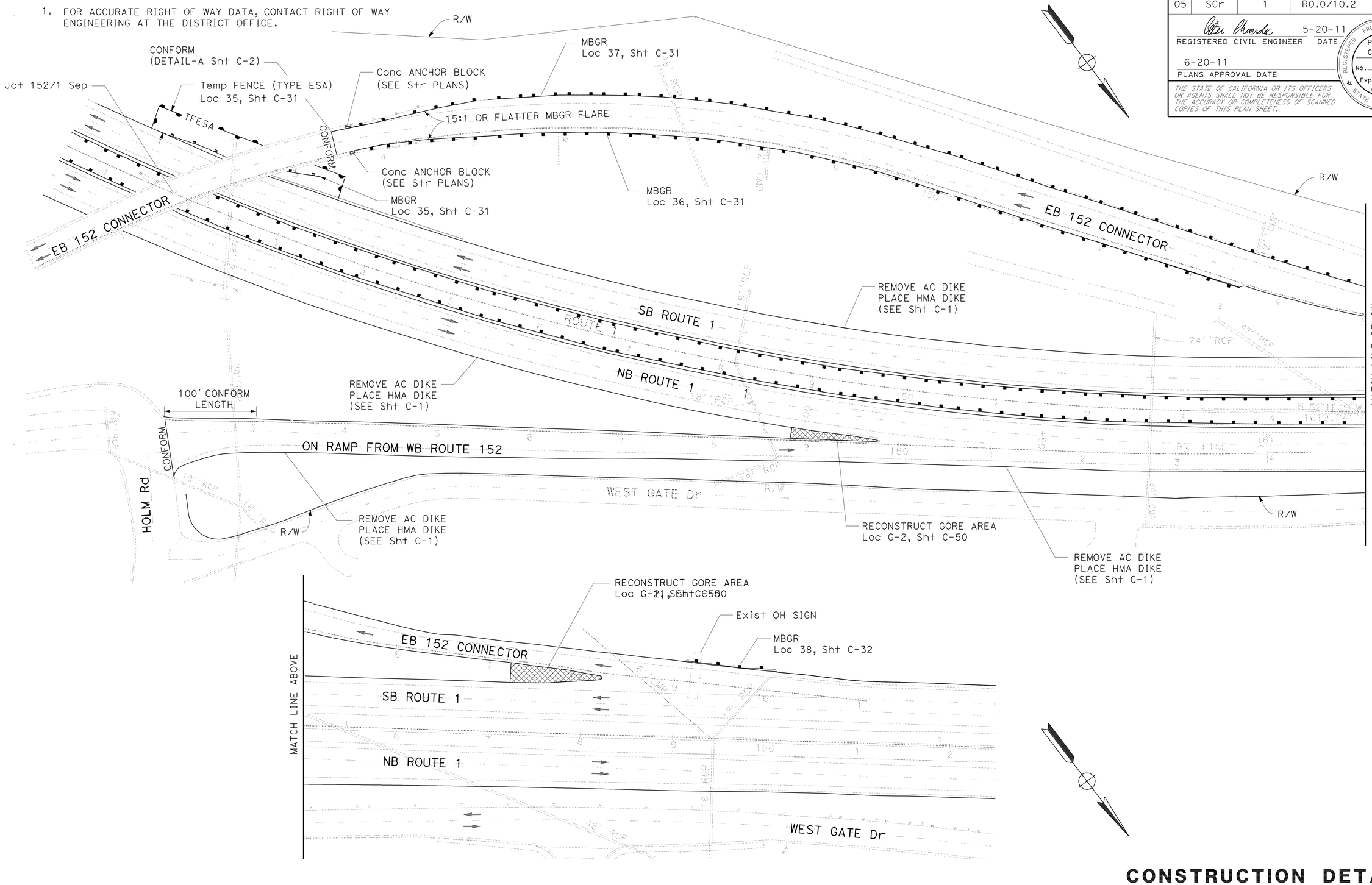

EXISTING UTILITY FACILITIES HAVE NOT BEEN PLOTTED ON THESE PLANS

CONSTRUCTION DETAILS
(ROUTE 152/1 SEPARATION)

NO SCALE

C-8

STATE OF CALIFORNIA - DEPARTMENT OF TRANSPORTATION
Caltrans® 06-DESIGN

FUNCTIONAL SUPERVISOR: ROBERTO BANDA
CALCULATED-DESIGNED BY: PETER CHANDER
CHECKED BY: ARMANDO OROZCO
REVISED BY / DATE REVISED

LAST REVISION 05-20-11
DATE PLOTTED => 12-AUG-2011
TIME PLOTTED => 11:08

Dist	COUNTY	ROUTE	POST MILES TOTAL PROJECT	SHEET No.	TOTAL SHEETS
05	SCr	1	R0.0/10.2	13	157

REGISTERED CIVIL ENGINEER 5-20-11 DATE

6-20-11
PLANS APPROVAL DATE

PROFESSIONAL ENGINEER REGISTERED PETER A CHANDER No. 63988 Exp. 09-30-12 CIVIL STATE OF CALIFORNIA

THE STATE OF CALIFORNIA OR ITS OFFICERS OR AGENTS SHALL NOT BE RESPONSIBLE FOR THE ACCURACY OR COMPLETENESS OF SCANNED COPIES OF THIS PLAN SHEET.

NOTES:

1. FOR ACCURATE RIGHT OF WAY DATA, CONTACT RIGHT OF WAY ENGINEERING AT THE DISTRICT OFFICE.

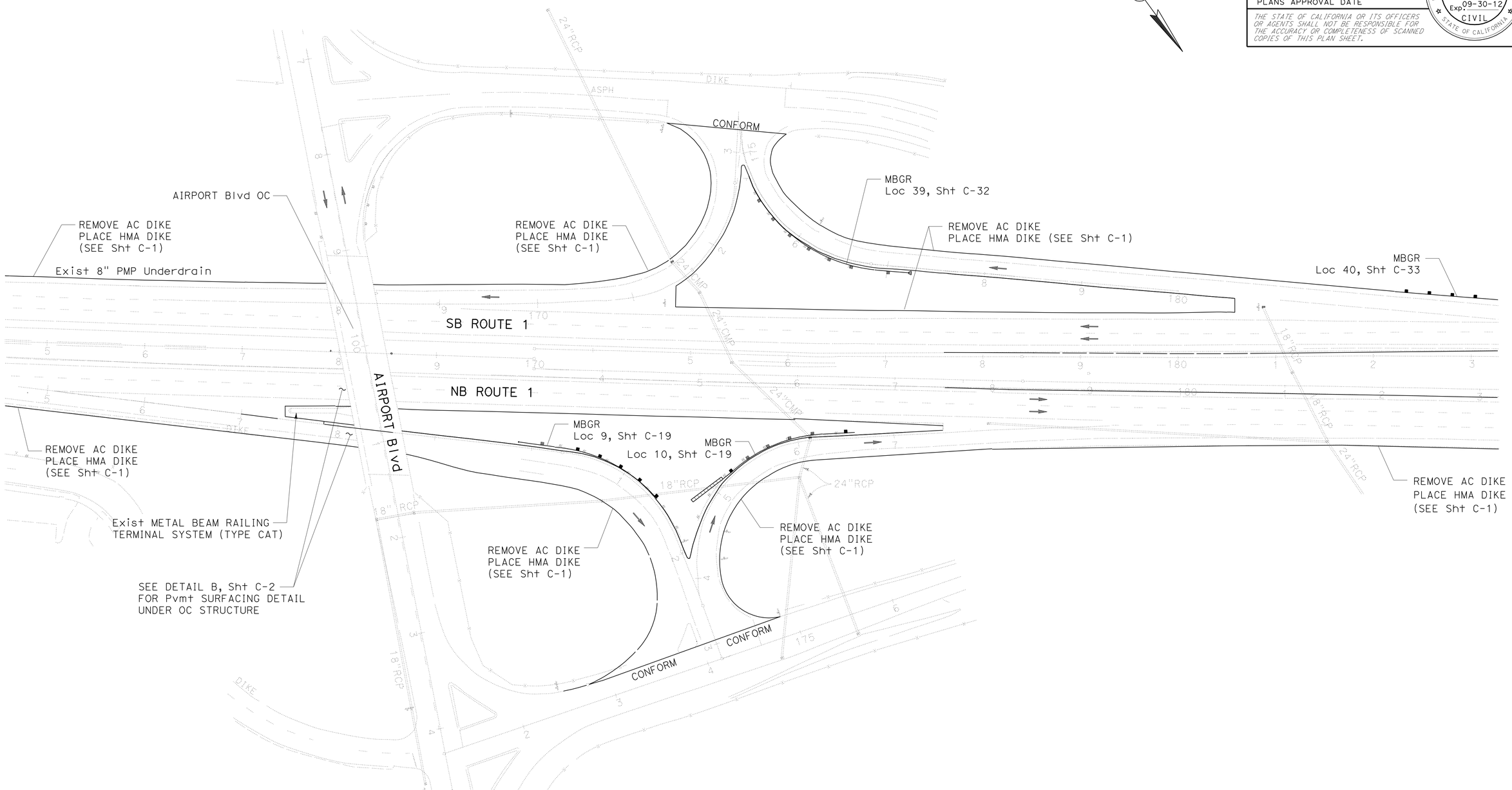

EXISTING UTILITY FACILITIES HAVE NOT BEEN PLOTTED ON THESE PLANS

CONSTRUCTION DETAILS
(AIRPORT Blvd)

NO SCALE

C-9

STATE OF CALIFORNIA - DEPARTMENT OF TRANSPORTATION
Caltrans
06-DESIGN

FUNCTIONAL SUPERVISOR: ROBERTO BANDA
CALCULATED-DESIGNED BY: PETER CHANDER
CHECKED BY: ARMANDO OROZCO
REVISED BY
DATE REVISED

LAST REVISION 05-20-11
DATE PLOTTED => 12-AUG-2011
TIME PLOTTED => 11:08

Dist	COUNTY	ROUTE	POST MILES TOTAL PROJECT	SHEET No.	TOTAL SHEETS
05	SCr	1	R0.0/10.2	14	157

REGISTERED CIVIL ENGINEER DATE 5-20-11

PLANS APPROVAL DATE 6-20-11

PROFESSIONAL ENGINEER REGISTERED PETER A CHANDER No. 63988 Exp 09-30-12 CIVIL STATE OF CALIFORNIA

THE STATE OF CALIFORNIA OR ITS OFFICERS OR AGENTS SHALL NOT BE RESPONSIBLE FOR THE ACCURACY OR COMPLETENESS OF SCANNED COPIES OF THIS PLAN SHEET.

NOTES:

1. FOR ACCURATE RIGHT OF WAY DATA, CONTACT RIGHT OF WAY ENGINEERING AT THE DISTRICT OFFICE.

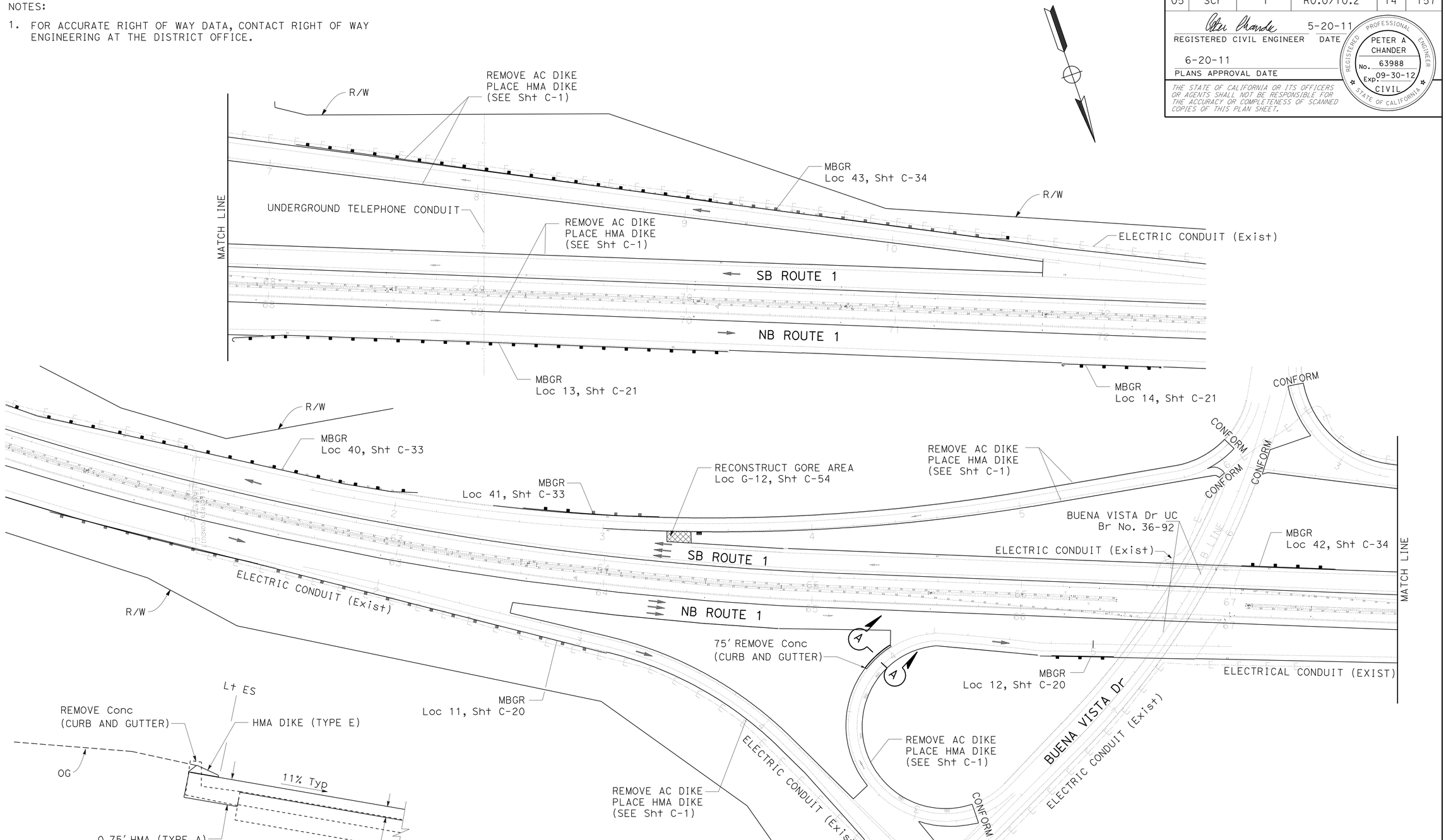

EXISTING UTILITY FACILITIES HAVE NOT BEEN PLOTTED ON THESE PLANS

CONSTRUCTION DETAILS
(BUENA VISTA Dr)

NO SCALE

C-10

STATE OF CALIFORNIA - DEPARTMENT OF TRANSPORTATION

Caltrans®

06-DESIGN

FUNCTIONAL SUPERVISOR: ROBERTO BANDA

CALCULATED-DESIGNED BY: PETER CHANDER

CHECKED BY: HAL KENYON

REVISED BY

DATE REVISED

LAST REVISION 05-20-11

DATE PLOTTED => 12-AUG-2011

TIME PLOTTED => 11:08

Dist	COUNTY	ROUTE	POST MILES TOTAL PROJECT	SHEET No.	TOTAL SHEETS
05	SCr	1	R0.0/R10.2	15	157

REGISTERED CIVIL ENGINEER 5-20-11 DATE

6-20-11
PLANS APPROVAL DATE

PROFESSIONAL ENGINEER REGISTERED PETER A CHANDER No. 63988 Exp. 09-30-12 CIVIL STATE OF CALIFORNIA

THE STATE OF CALIFORNIA OR ITS OFFICERS OR AGENTS SHALL NOT BE RESPONSIBLE FOR THE ACCURACY OR COMPLETENESS OF SCANNED COPIES OF THIS PLAN SHEET.

NOTES:

1. FOR ACCURATE RIGHT OF WAY DATA, CONTACT RIGHT OF WAY ENGINEERING AT THE DISTRICT OFFICE.

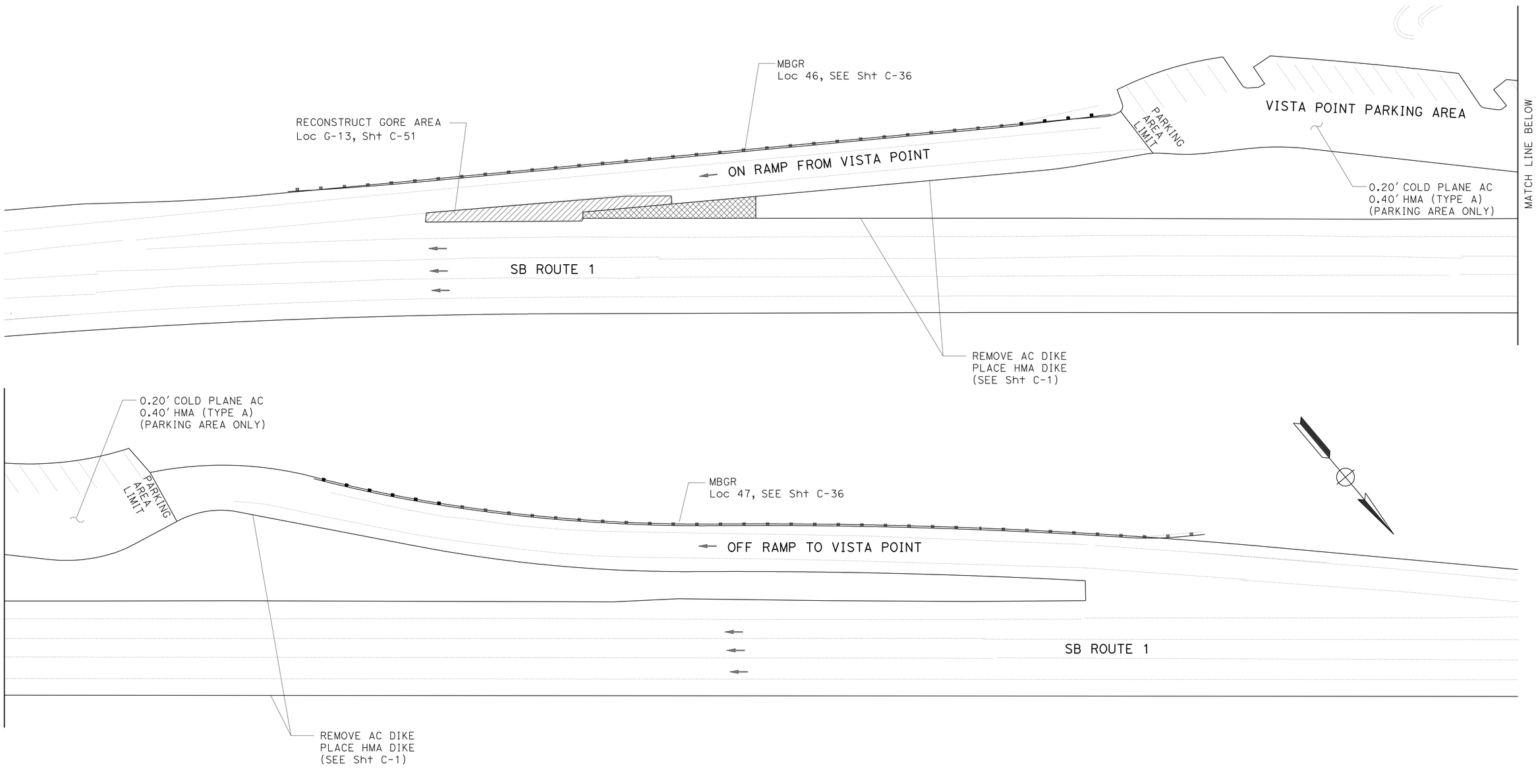

EXISTING UTILITY FACILITIES HAVE NOT BEEN PLOTTED ON THESE PLANS

CONSTRUCTION DETAILS
(VISTA POINT REST AREA)

NO SCALE

C-11

STATE OF CALIFORNIA - DEPARTMENT OF TRANSPORTATION
Caltrans
06-DESIGN

FUNCTIONAL SUPERVISOR: ROBERTO BANDA
CALCULATED-DESIGNED BY: PETER CHANDER
CHECKED BY: ARMANDO OROZCO
REVISED BY
DATE REVISED

LAST REVISION 05-20-11
DATE PLOTTED => 12-AUG-2011
TIME PLOTTED => 11:08

Dist	COUNTY	ROUTE	POST MILES TOTAL PROJECT	SHEET No.	TOTAL SHEETS
05	SCr	1	R0.0/10.2	16	157

REGISTERED CIVIL ENGINEER 5-20-11 DATE

6-20-11
PLANS APPROVAL DATE

PROFESSIONAL ENGINEER REGISTERED PETER A CHANDER No. 63988 Exp. 09-30-12 CIVIL STATE OF CALIFORNIA

THE STATE OF CALIFORNIA OR ITS OFFICERS OR AGENTS SHALL NOT BE RESPONSIBLE FOR THE ACCURACY OR COMPLETENESS OF SCANNED COPIES OF THIS PLAN SHEET.

NOTES:

1. FOR ACCURATE RIGHT OF WAY DATA, CONTACT RIGHT OF WAY ENGINEERING AT THE DISTRICT OFFICE.

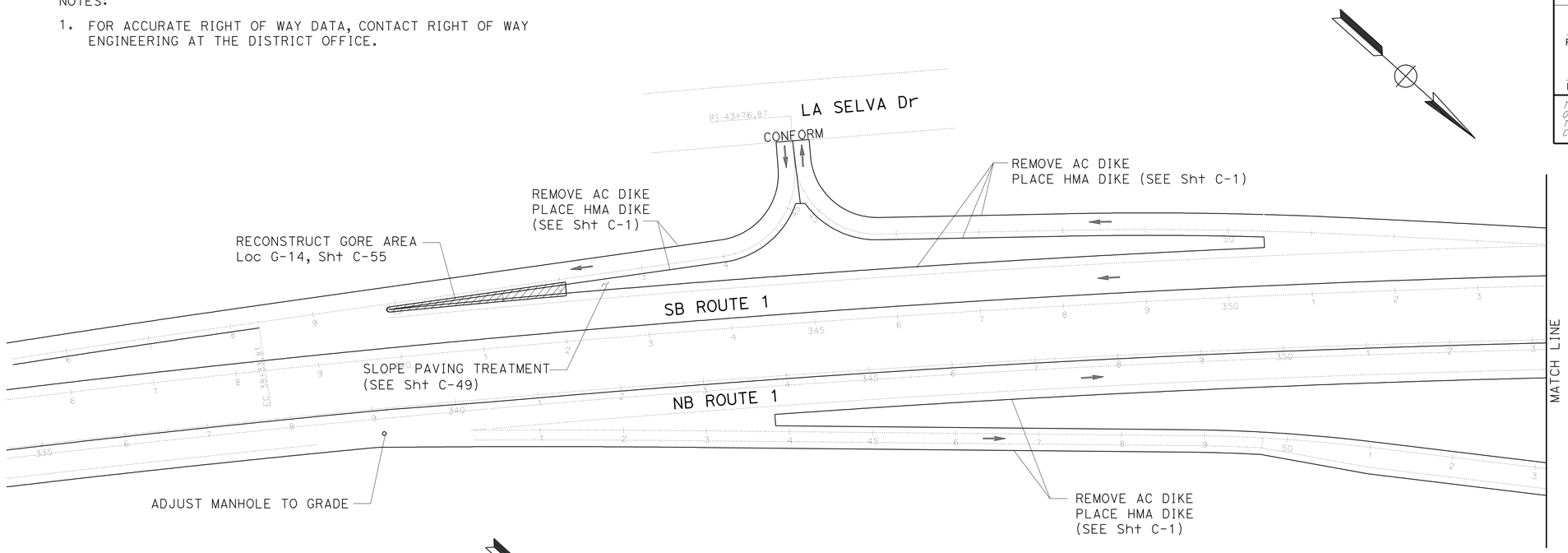

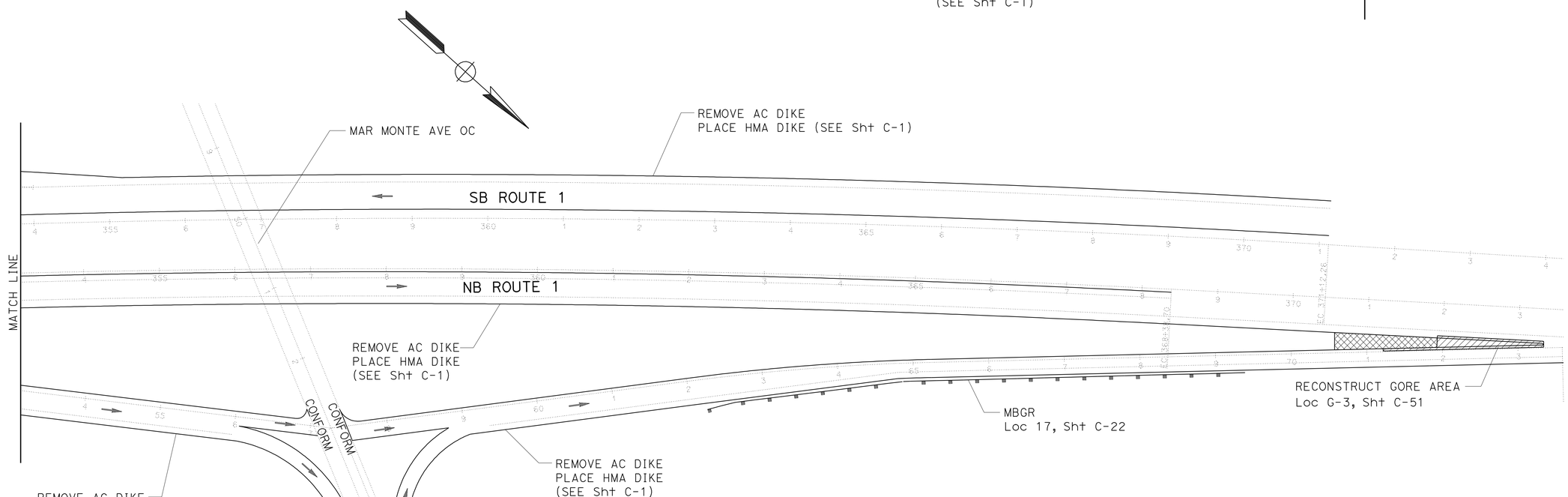

CONSTRUCTION DETAILS
(MAR MONTE Ave)

NO SCALE

C-12

EXISTING UTILITY FACILITIES HAVE NOT BEEN PLOTTED ON THESE PLANS

STATE OF CALIFORNIA - DEPARTMENT OF TRANSPORTATION
Caltrans® 06-DESIGN

FUNCTIONAL SUPERVISOR: ROBERTO BANDA

CALCULATED-DESIGNED BY: PETER CHANDER
CHECKED BY: HAL KENYON

REVISED BY
DATE REVISED

LAST REVISION 05-20-11
DATE PLOTTED => 12-AUG-2011
TIME PLOTTED => 11:09

Dist	COUNTY	ROUTE	POST MILES TOTAL PROJECT	SHEET No.	TOTAL SHEETS
05	SCr	1	R0.0/10.2	17	157

REGISTERED CIVIL ENGINEER 5-20-11 DATE

6-20-11
PLANS APPROVAL DATE

PROFESSIONAL ENGINEER REGISTERED PETER A CHANDER No. 63988 Exp. 09-30-12 CIVIL STATE OF CALIFORNIA

THE STATE OF CALIFORNIA OR ITS OFFICERS OR AGENTS SHALL NOT BE RESPONSIBLE FOR THE ACCURACY OR COMPLETENESS OF SCANNED COPIES OF THIS PLAN SHEET.

NOTES:

1. FOR ACCURATE RIGHT OF WAY DATA, CONTACT RIGHT OF WAY ENGINEERING AT THE DISTRICT OFFICE.

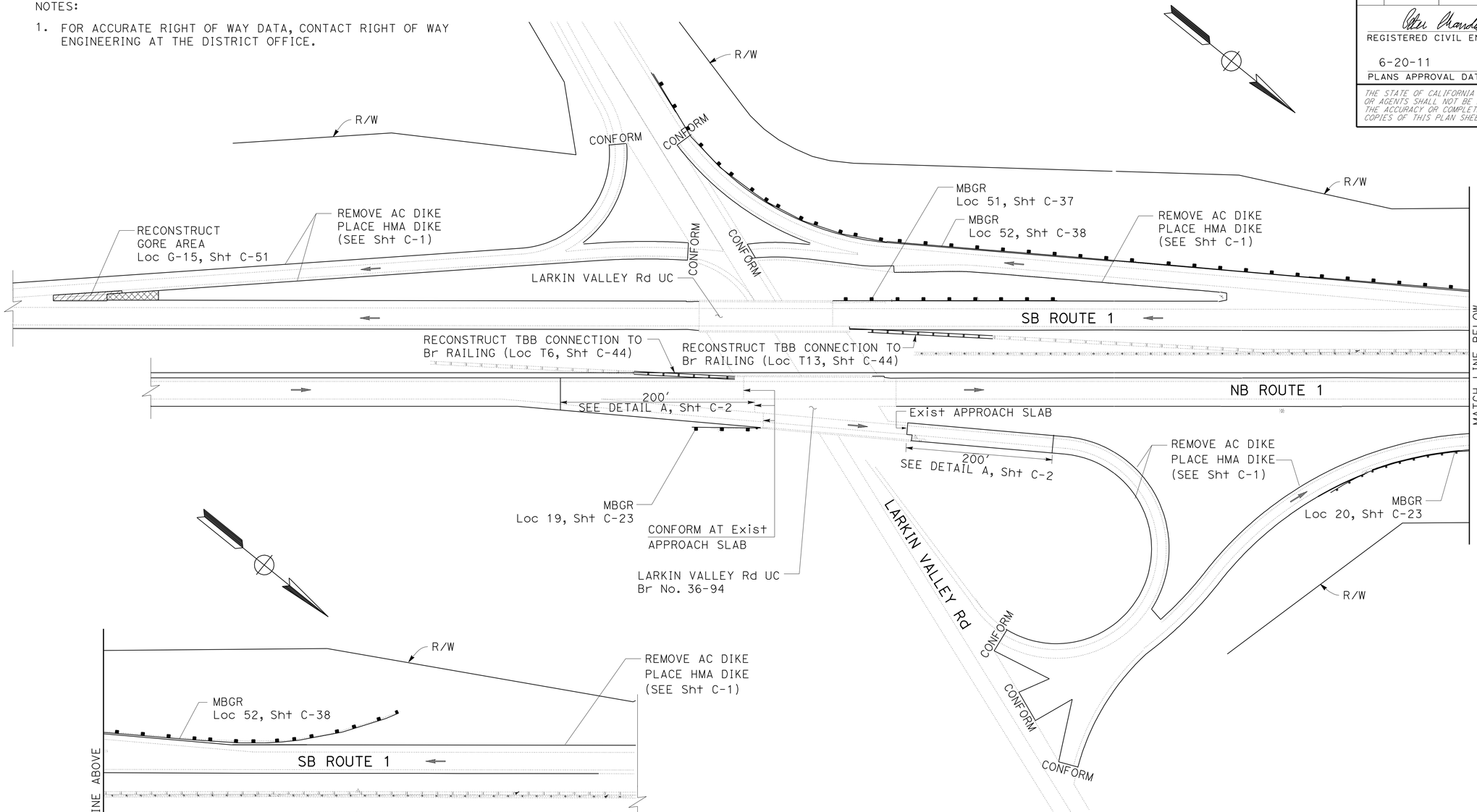

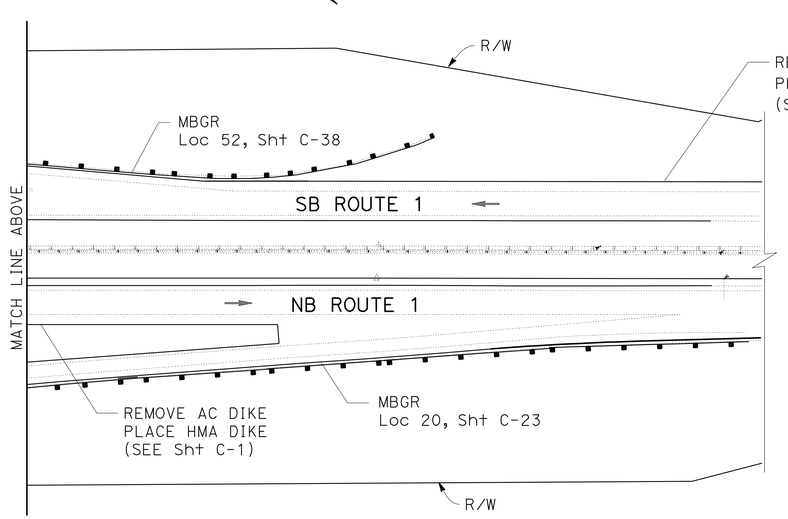

EXISTING UTILITY FACILITIES HAVE NOT BEEN PLOTTED ON THESE PLANS

CONSTRUCTION DETAILS
(LARKIN VALLEY Rd)

NO SCALE

C-13

PETER CHANDER | HAL KENYON | ROBERTO BANDA | 06-DESIGN

REVISED BY | DATE REVISED | CALCULATED-DESIGNED BY | CHECKED BY | FUNCTIONAL SUPERVISOR

STATE OF CALIFORNIA - DEPARTMENT OF TRANSPORTATION

Caltrans

LAST REVISION 05-20-11 | DATE PLOTTED => 12-AUG-2011 | TIME PLOTTED => 11:09

Dist	COUNTY	ROUTE	POST MILES TOTAL PROJECT	SHEET No.	TOTAL SHEETS
05	SCr	1	R0.0/10.2	18	157

REGISTERED CIVIL ENGINEER 5-20-11 DATE

6-20-11
PLANS APPROVAL DATE

PROFESSIONAL ENGINEER REGISTERED PETER A CHANDER No. 63988 Exp. 09-30-12 CIVIL STATE OF CALIFORNIA

THE STATE OF CALIFORNIA OR ITS OFFICERS OR AGENTS SHALL NOT BE RESPONSIBLE FOR THE ACCURACY OR COMPLETENESS OF SCANNED COPIES OF THIS PLAN SHEET.

NOTES:

1. FOR ACCURATE RIGHT OF WAY DATA, CONTACT RIGHT OF WAY ENGINEERING AT THE DISTRICT OFFICE.

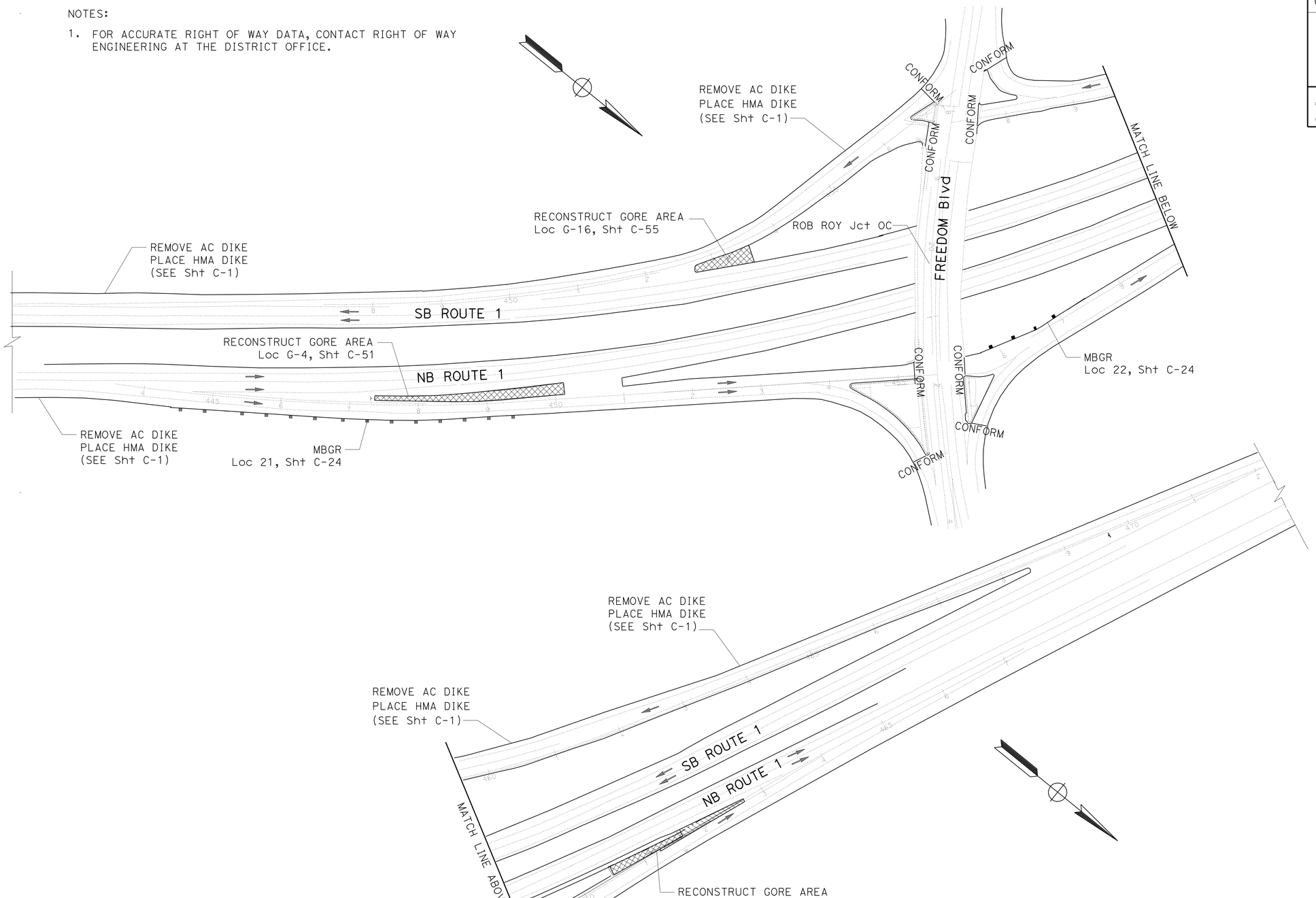

EXISTING UTILITY FACILITIES HAVE NOT BEEN PLOTTED ON THESE PLANS

CONSTRUCTION DETAILS
(FREEDOM Blvd)

NO SCALE

C-14

STATE OF CALIFORNIA - DEPARTMENT OF TRANSPORTATION
Caltrans® 06-DESIGN

FUNCTIONAL SUPERVISOR: ROBERTO BANDA

CALCULATED-DESIGNED BY: MICAELA GARCIA
CHECKED BY: PETER CHANDER

REVISED BY | DATE REVISED

LAST REVISION 05-20-11 | DATE PLOTTED => 12-AUG-2011 | TIME PLOTTED => 11:09

Dist	COUNTY	ROUTE	POST MILES TOTAL PROJECT	SHEET No.	TOTAL SHEETS
05	SCr	1	R0.0/10.2	19	157

REGISTERED CIVIL ENGINEER 5-20-11 DATE

6-20-11
PLANS APPROVAL DATE

PROFESSIONAL ENGINEER REGISTERED PETER A CHANDER No. 63988 Exp 09-30-12 CIVIL STATE OF CALIFORNIA

THE STATE OF CALIFORNIA OR ITS OFFICERS OR AGENTS SHALL NOT BE RESPONSIBLE FOR THE ACCURACY OR COMPLETENESS OF SCANNED COPIES OF THIS PLAN SHEET.

NOTES:

1. FOR ACCURATE RIGHT OF WAY DATA, CONTACT RIGHT OF WAY ENGINEERING AT THE DISTRICT OFFICE.

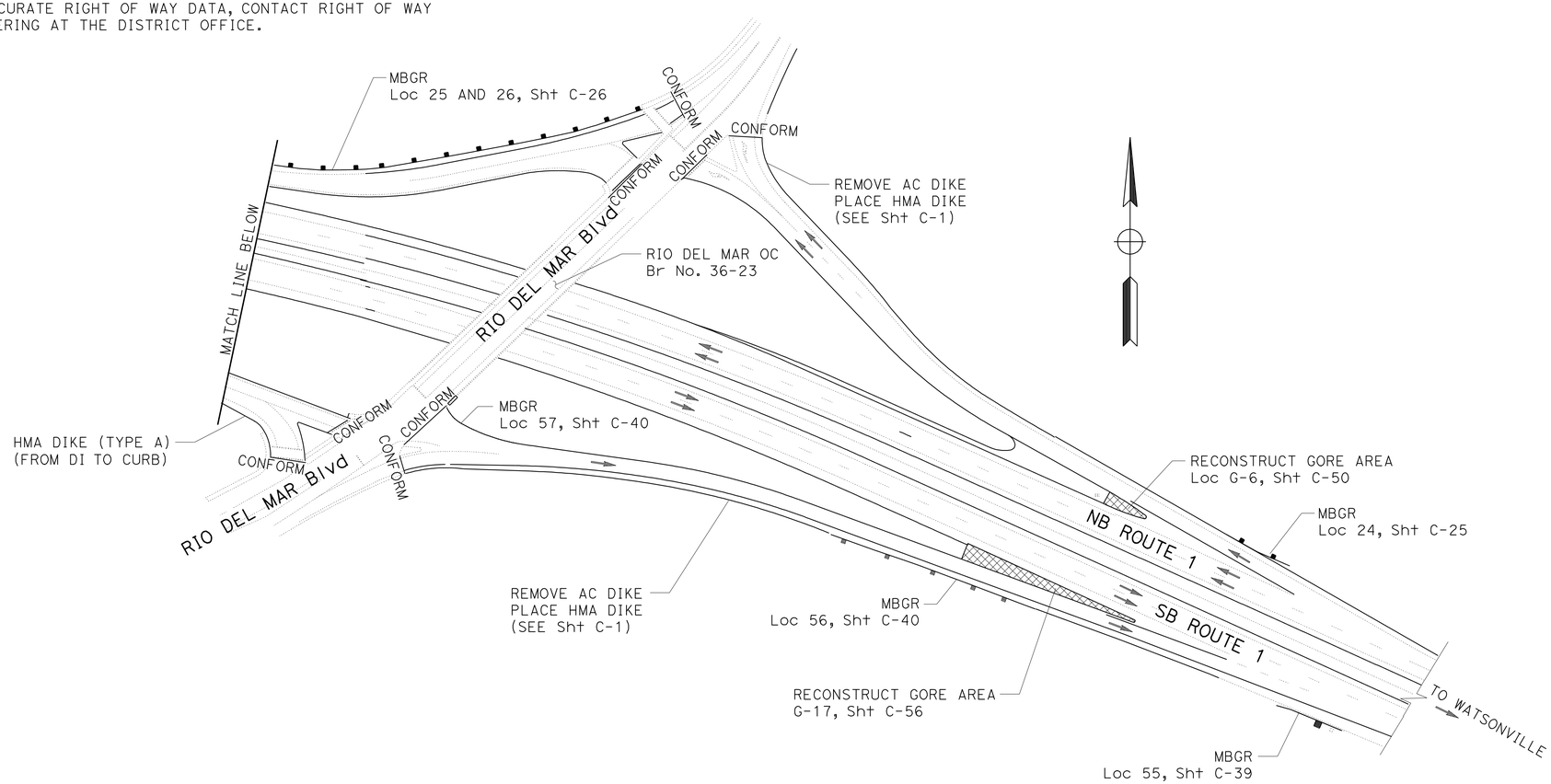

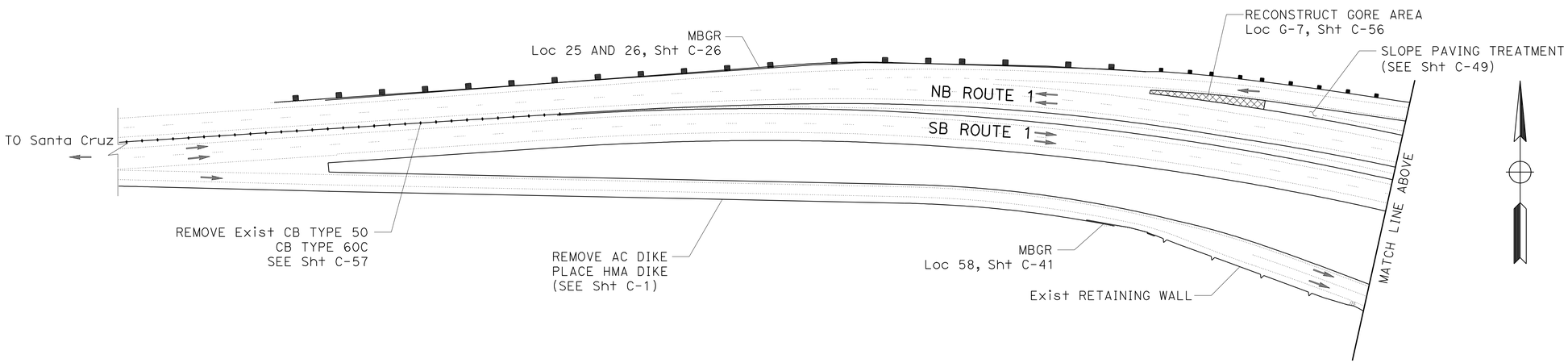

EXISTING UTILITY FACILITIES HAVE NOT BEEN PLOTTED ON THESE PLANS

CONSTRUCTION DETAILS
(RIO DEL MAR Blvd)

NO SCALE

C-15

STATE OF CALIFORNIA - DEPARTMENT OF TRANSPORTATION
Caltrans 06-DESIGN

FUNCTIONAL SUPERVISOR: ROBERTO BANDA
CALCULATED-DESIGNED BY: MICAELA GARCIA
CHECKED BY: PETER CHANDER
REVISED BY
DATE REVISED

LAST REVISION 05-20-11
DATE PLOTTED => 12-AUG-2011
TIME PLOTTED => 11:09

Dist	COUNTY	ROUTE	POST MILES TOTAL PROJECT	SHEET No.	TOTAL SHEETS
05	SCr	1	R0.0/10.2	20	157

REGISTERED CIVIL ENGINEER 5-20-11 DATE

6-20-11
PLANS APPROVAL DATE

REGISTERED PROFESSIONAL ENGINEER PETER A CHANDER No. 63988 Exp. 09-30-12 CIVIL STATE OF CALIFORNIA

THE STATE OF CALIFORNIA OR ITS OFFICERS OR AGENTS SHALL NOT BE RESPONSIBLE FOR THE ACCURACY OR COMPLETENESS OF SCANNED COPIES OF THIS PLAN SHEET.

LEGEND

- CONCRETE ANCHOR BLOCK (CAB) CONNECTION FOR BARRIER RAILING
- DIRECTION OF TRAFFIC
- MBGR TERMINAL SYSTEM

ABBREVIATIONS

AFTS - ALTERNATIVE FLARED TERMINAL SECTION
AITS - ALTERNATIVE IN-LINE TERMINAL SECTION
CAB - CONCRETE ANCHOR BLOCK
EAA - END ANCHOR ASSEMBLY
N/RCD- NEW OR RECONSTRUCTED.
R/RC - REMOVE AND RECONSTRUCT.
TS - Exist TERMINAL SYSTEM

NOTES

1. SEE Sht C-42 FOR VEGETATION CONTROL (ASPHALT COMPOSITE).
2. A SINGLE INSTALLATION OF MBGR SHALL NOT MIX NEW AND Exist RAIL ELEMENTS.
3. Exist STATE ELECTRICAL CONDUITS SHOWN SHALL BE PROTECTED IN PLACE DURING CONSTRUCTION.
4. FOR DETAILS ON MBGR NARROW ROADWAY INSTALLATION SEE Std PLANS.
5. FOR DETAILS ON MBGR STRENGTHENED RAILING SECTION NEAR FIXED OBJECTS SEE Std PLANS.

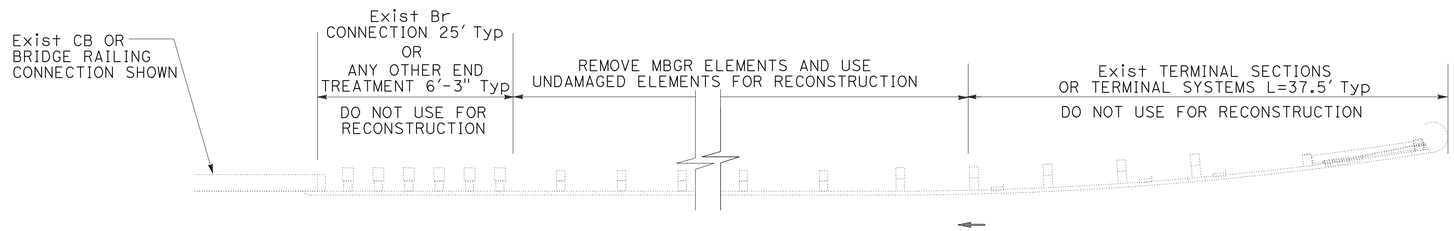

TYPICAL REMOVE AND RECONSTRUCT (R/RC)

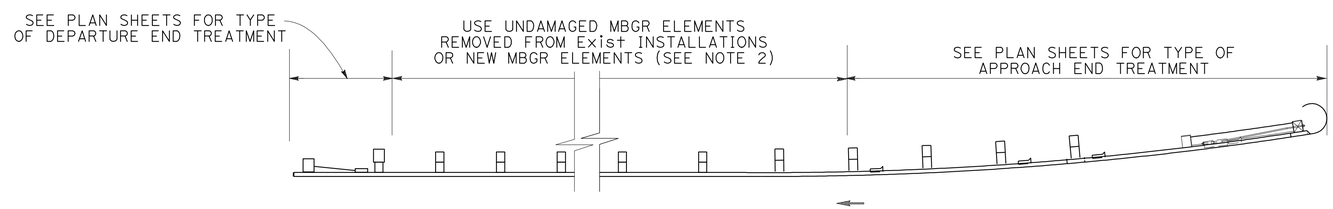

TYPICAL NEW OR RECONSTRUCTED MBGR (N/RCD)

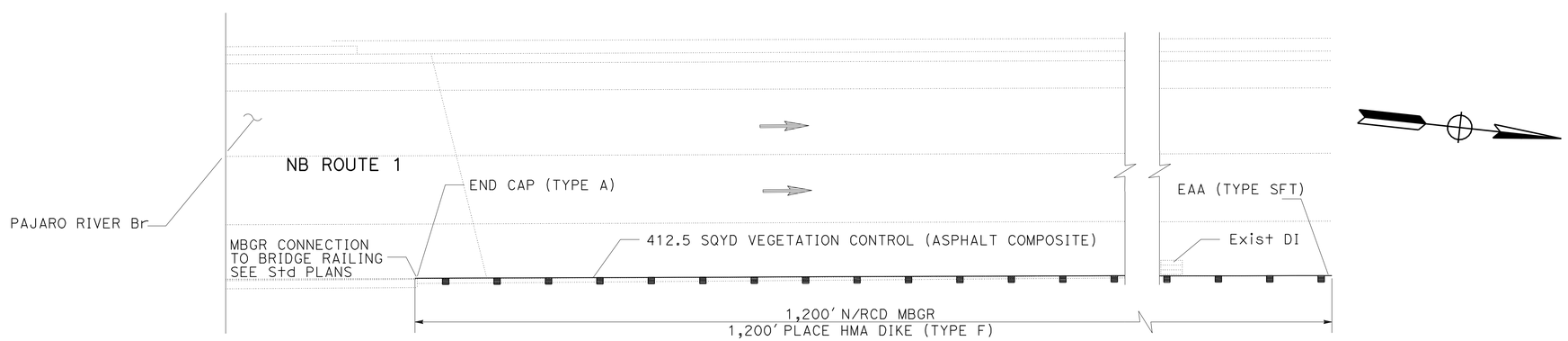

LOCATION 1

PM R0.04
TYPE 12DD LAYOUT

EXISTING UTILITY FACILITIES HAVE NOT BEEN PLOTTED ON THESE PLANS

CONSTRUCTION DETAILS

NO SCALE

C-16

STATE OF CALIFORNIA - DEPARTMENT OF TRANSPORTATION
Caltrans 06-DESIGN

FUNCTIONAL SUPERVISOR: ROBERTO BANDA
CALCULATED-DESIGNED BY: PETER CHANDER
CHECKED BY: HAL KENYON
REVISED BY / DATE REVISED

LAST REVISION 05-20-11
DATE PLOTTED => 12-AUG-2011
TIME PLOTTED => 11:09

Dist	COUNTY	ROUTE	POST MILES TOTAL PROJECT	SHEET No.	TOTAL SHEETS
05	SCr	1	R0.0/10.2	21	157

REGISTERED CIVIL ENGINEER 5-20-11 DATE

6-20-11
PLANS APPROVAL DATE

REGISTERED PROFESSIONAL ENGINEER PETER A CHANDER No. 63988 Exp. 09-30-12 CIVIL STATE OF CALIFORNIA

THE STATE OF CALIFORNIA OR ITS OFFICERS OR AGENTS SHALL NOT BE RESPONSIBLE FOR THE ACCURACY OR COMPLETENESS OF SCANNED COPIES OF THIS PLAN SHEET.

NOTES:

1. FOR ACCURATE RIGHT OF WAY DATA, CONTACT RIGHT OF WAY ENGINEERING AT THE DISTRICT OFFICE.

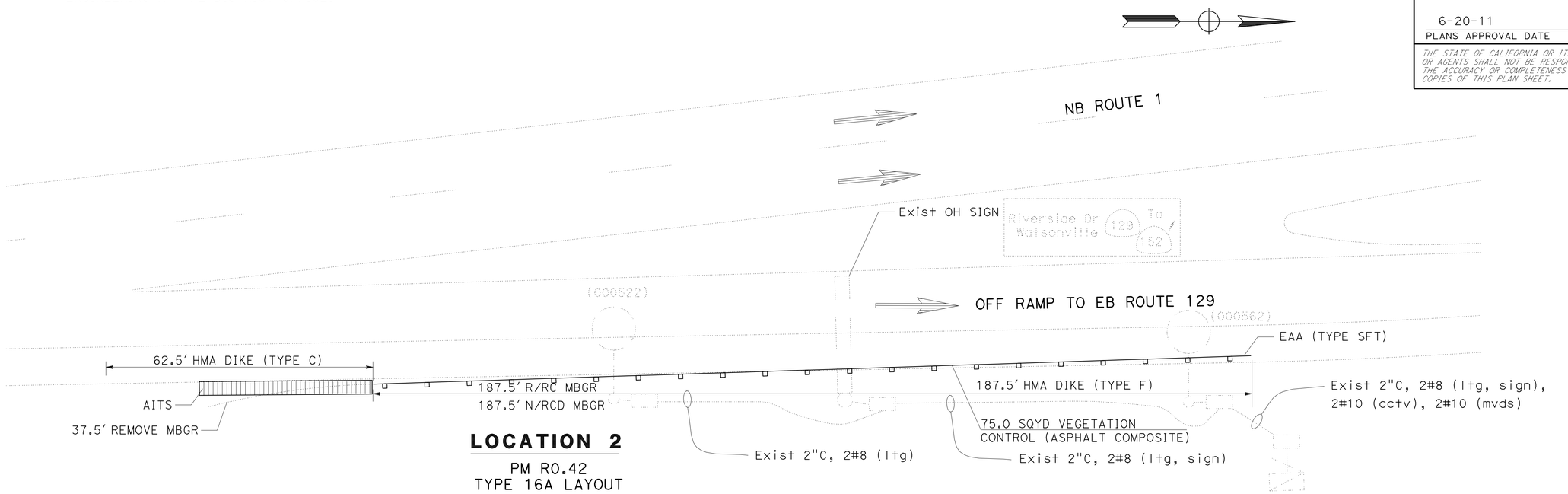

LOCATION 2

PM R0.42
TYPE 16A LAYOUT

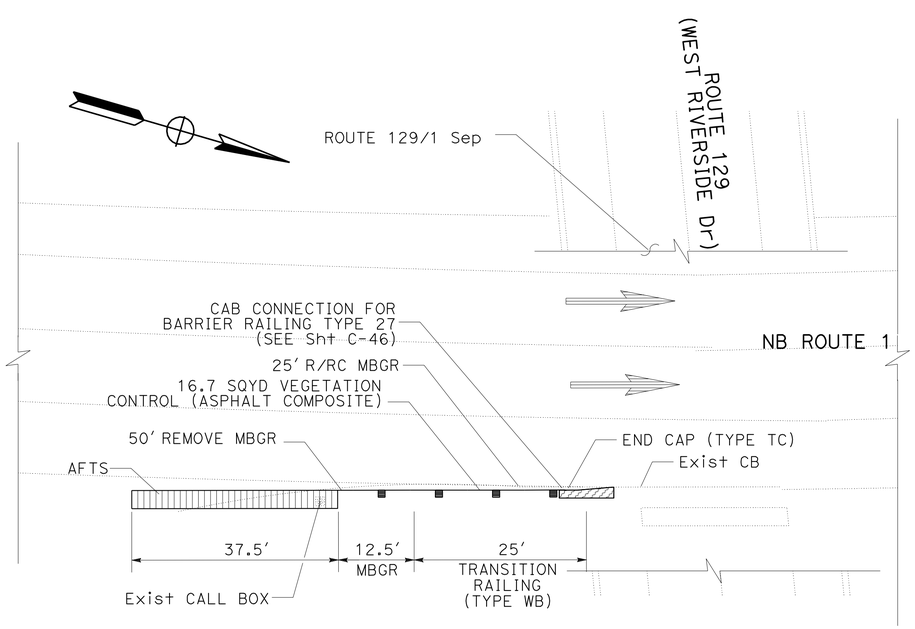

LOCATION 3

PM R0.72
TYPE 12B LAYOUT

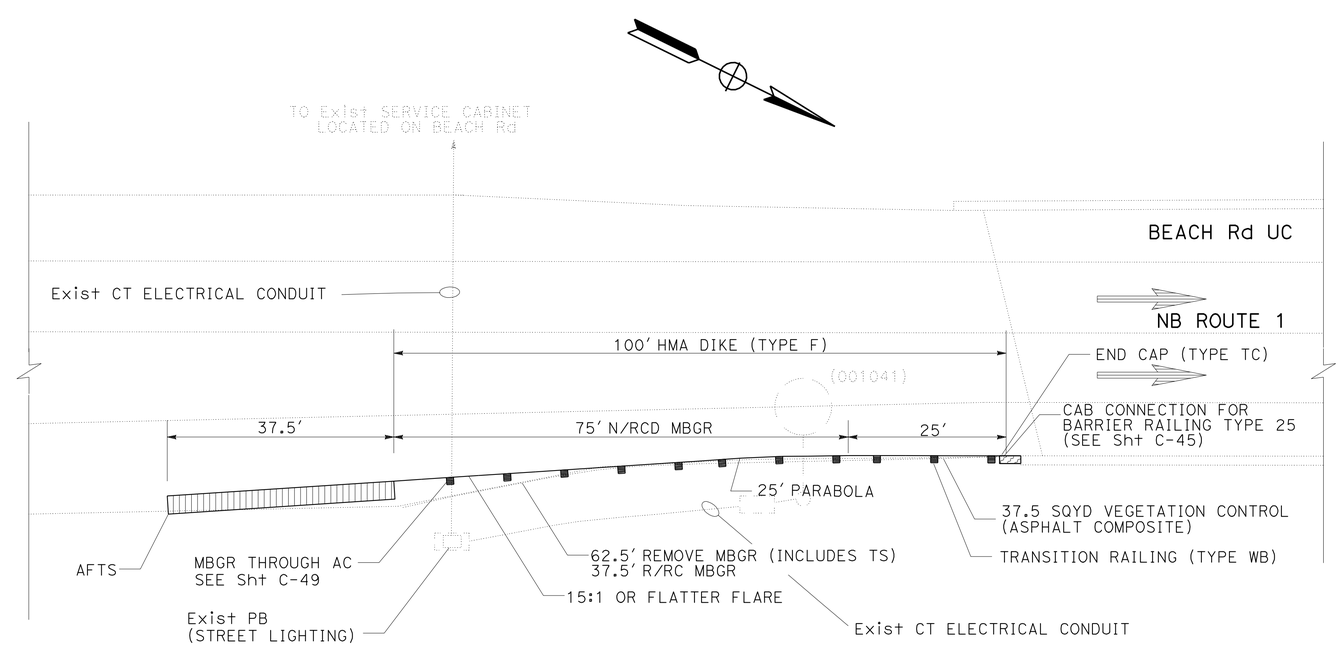

LOCATION 4

PM R1.01
TYPE 12B LAYOUT

CONSTRUCTION DETAILS

NO SCALE

C-17

EXISTING UTILITY FACILITIES HAVE NOT BEEN PLOTTED ON THESE PLANS

STATE OF CALIFORNIA - DEPARTMENT OF TRANSPORTATION
Caltrans
06-DESIGN
FUNCTIONAL SUPERVISOR: ROBERTO BANDA
CALCULATED-DESIGNED BY: PETER CHANDER
CHECKED BY: HAL KENYON
REVISED BY
DATE REVISED

LAST REVISION 05-20-11
DATE PLOTTED => 12-AUG-2011
TIME PLOTTED => 11:09

Dist	COUNTY	ROUTE	POST MILES TOTAL PROJECT	SHEET No.	TOTAL SHEETS
05	SCr	1	R0.0/10.2	22	157

REGISTERED CIVIL ENGINEER 5-20-11 DATE

6-20-11
PLANS APPROVAL DATE

REGISTERED PROFESSIONAL ENGINEER PETER A CHANDER No. 63988 Exp. 09-30-12 CIVIL STATE OF CALIFORNIA

THE STATE OF CALIFORNIA OR ITS OFFICERS OR AGENTS SHALL NOT BE RESPONSIBLE FOR THE ACCURACY OR COMPLETENESS OF SCANNED COPIES OF THIS PLAN SHEET.

NOTES:

1. FOR ACCURATE RIGHT OF WAY DATA, CONTACT RIGHT OF WAY ENGINEERING AT THE DISTRICT OFFICE.

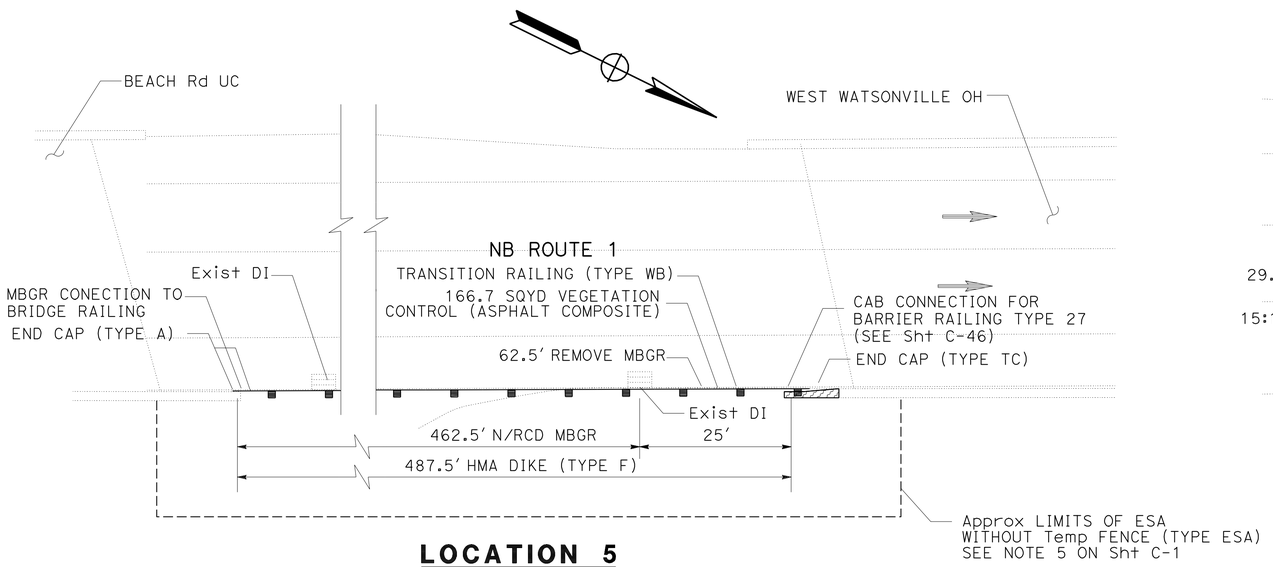

LOCATION 5
PM R1.14
TYPE 12D LAYOUT

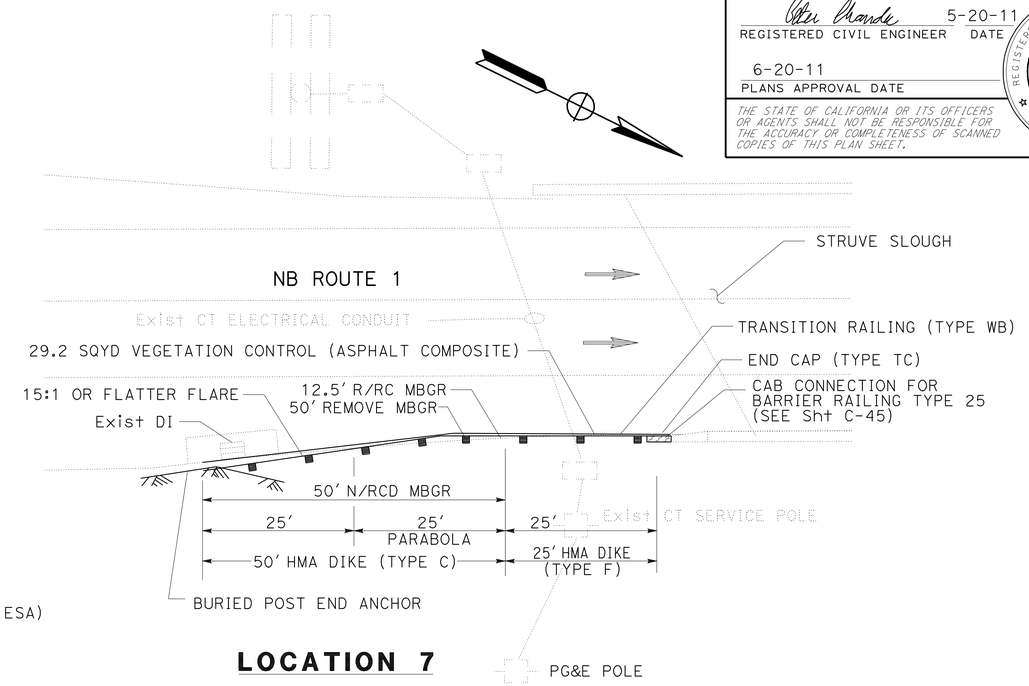

LOCATION 7
PM R1.59
TYPE 12C LAYOUT

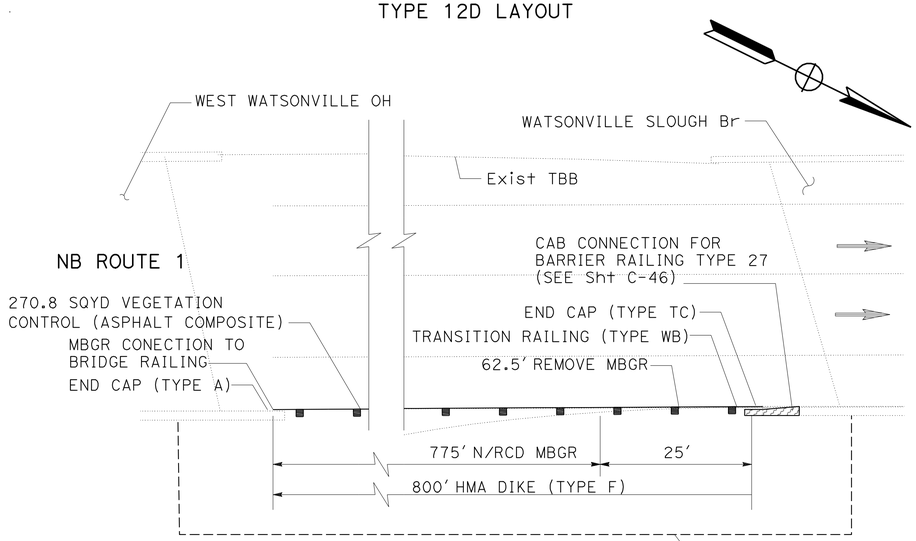

LOCATION 6
PM R1.35
TYPE 12D LAYOUT

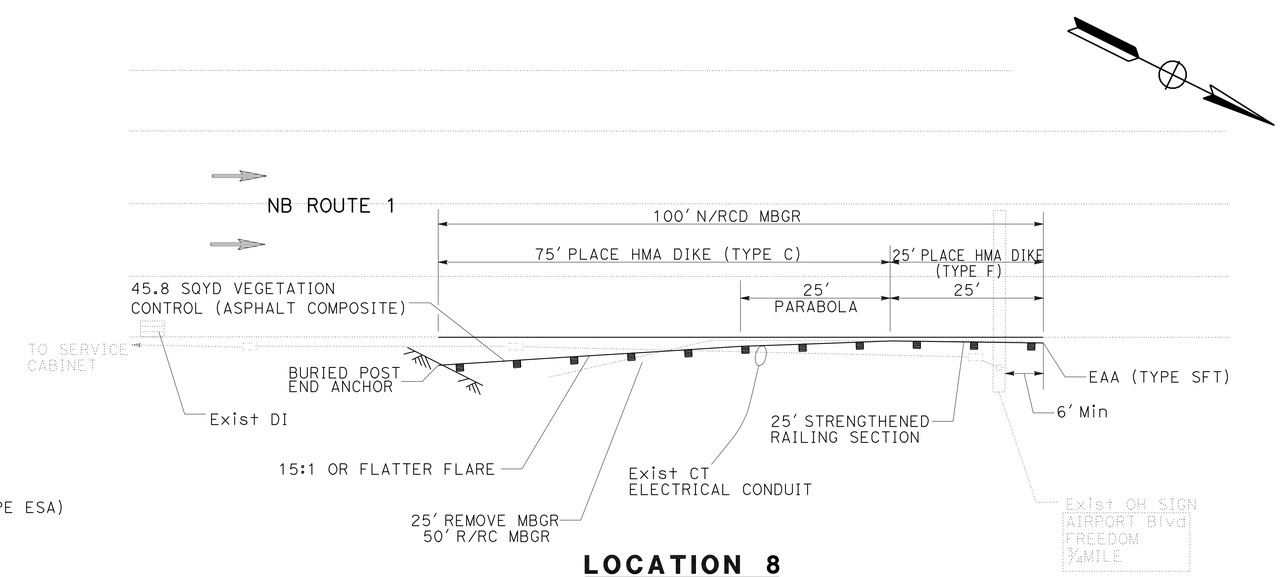

LOCATION 8
PM R2.40
TYPE 16C LAYOUT

EXISTING UTILITY FACILITIES HAVE NOT BEEN PLOTTED ON THESE PLANS

CONSTRUCTION DETAILS

NO SCALE

C-18

STATE OF CALIFORNIA - DEPARTMENT OF TRANSPORTATION
Caltrans 06-DESIGN
FUNCTIONAL SUPERVISOR: ROBERTO BANDA
CALCULATED-DESIGNED BY: HAL KENYON
CHECKED BY: PETER CHANDER
REVISED BY
DATE REVISED

LAST REVISION 05-20-11
DATE PLOTTED => 12-AUG-2011
TIME PLOTTED => 11:09

Dist	COUNTY	ROUTE	POST MILES TOTAL PROJECT	SHEET No.	TOTAL SHEETS
05	SCr	1	R0.0/10.2	23	157

REGISTERED CIVIL ENGINEER DATE 5-20-11

6-20-11
PLANS APPROVAL DATE

REGISTERED PROFESSIONAL ENGINEER
PETER A CHANDER
No. 63988
Exp. 09-30-12
CIVIL
STATE OF CALIFORNIA

THE STATE OF CALIFORNIA OR ITS OFFICERS OR AGENTS SHALL NOT BE RESPONSIBLE FOR THE ACCURACY OR COMPLETENESS OF SCANNED COPIES OF THIS PLAN SHEET.

NOTES:

1. FOR ACCURATE RIGHT OF WAY DATA, CONTACT RIGHT OF WAY ENGINEERING AT THE DISTRICT OFFICE.

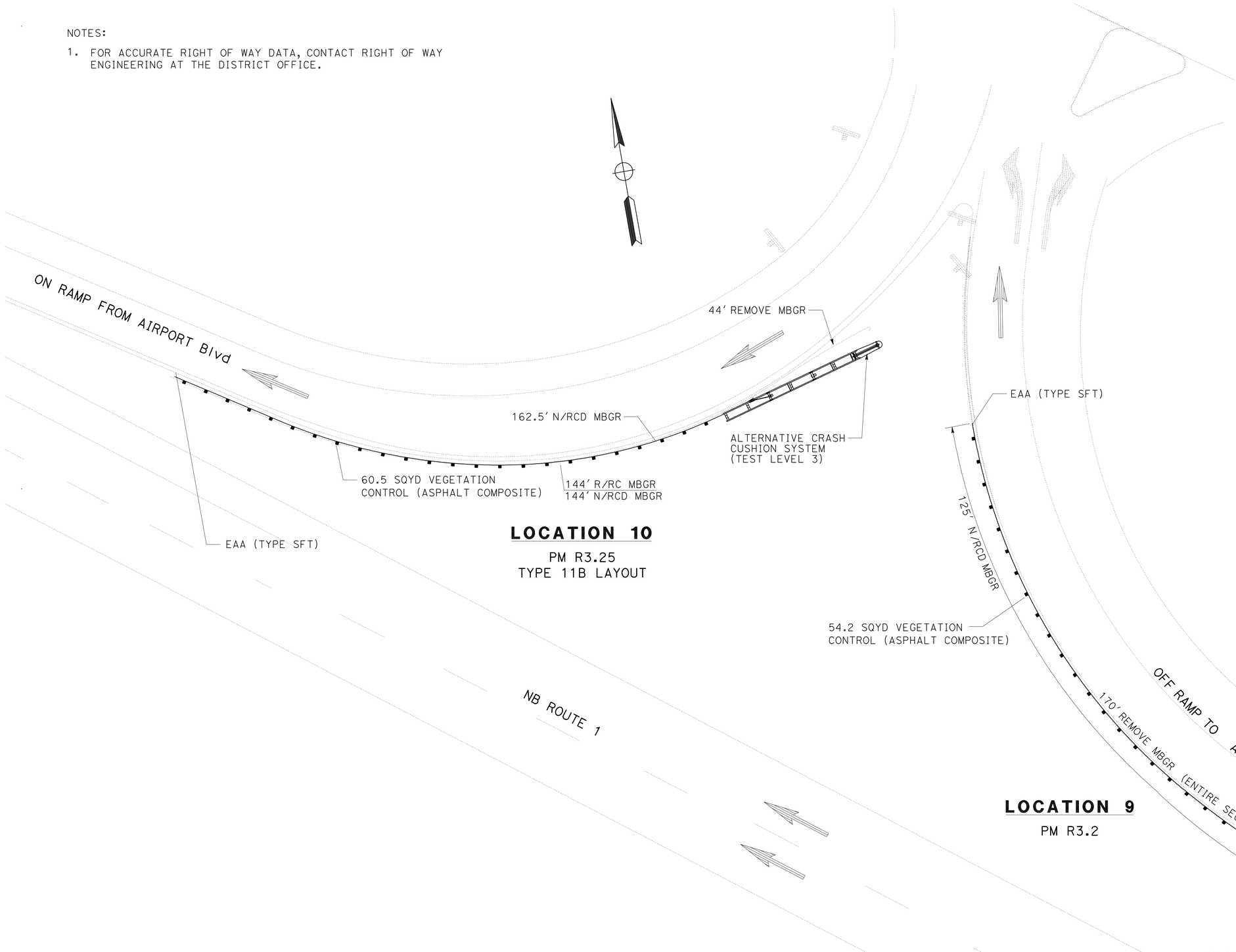

LOCATION 10
PM R3.25
TYPE 11B LAYOUT

LOCATION 9
PM R3.2

EXISTING UTILITY FACILITIES HAVE NOT BEEN PLOTTED ON THESE PLANS

CONSTRUCTION DETAILS

NO SCALE

C-19

PETER CHANDER — REVISED BY
HAL KENYON — DATE REVISED
CALCULATED-DESIGNED BY
CHECKED BY
FUNCTIONAL SUPERVISOR
ROBERTO BANDA

STATE OF CALIFORNIA - DEPARTMENT OF TRANSPORTATION
Caltrans®
06-DESIGN

LAST REVISION 05-20-11
DATE PLOTTED => 12-AUG-2011
TIME PLOTTED => 11:09

Dist	COUNTY	ROUTE	POST MILES TOTAL PROJECT	SHEET No.	TOTAL SHEETS
05	SCr	1	R0.0/10.2	24	157

REGISTERED CIVIL ENGINEER 5-20-11 DATE

6-20-11
PLANS APPROVAL DATE

REGISTERED PROFESSIONAL ENGINEER
PETER A CHANDER
No. 63988
Exp. 09-30-12
CIVIL
STATE OF CALIFORNIA

THE STATE OF CALIFORNIA OR ITS OFFICERS OR AGENTS SHALL NOT BE RESPONSIBLE FOR THE ACCURACY OR COMPLETENESS OF SCANNED COPIES OF THIS PLAN SHEET.

NOTES:

1. FOR ACCURATE RIGHT OF WAY DATA, CONTACT RIGHT OF WAY ENGINEERING AT THE DISTRICT OFFICE.

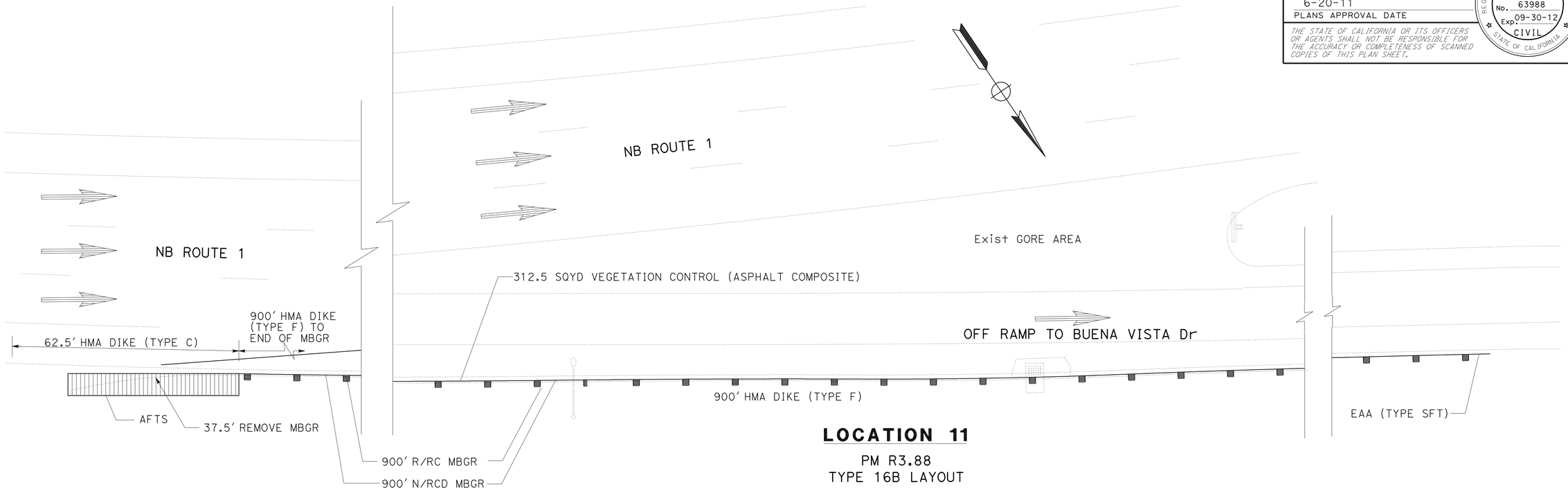

LOCATION 11

PM R3.88
TYPE 16B LAYOUT

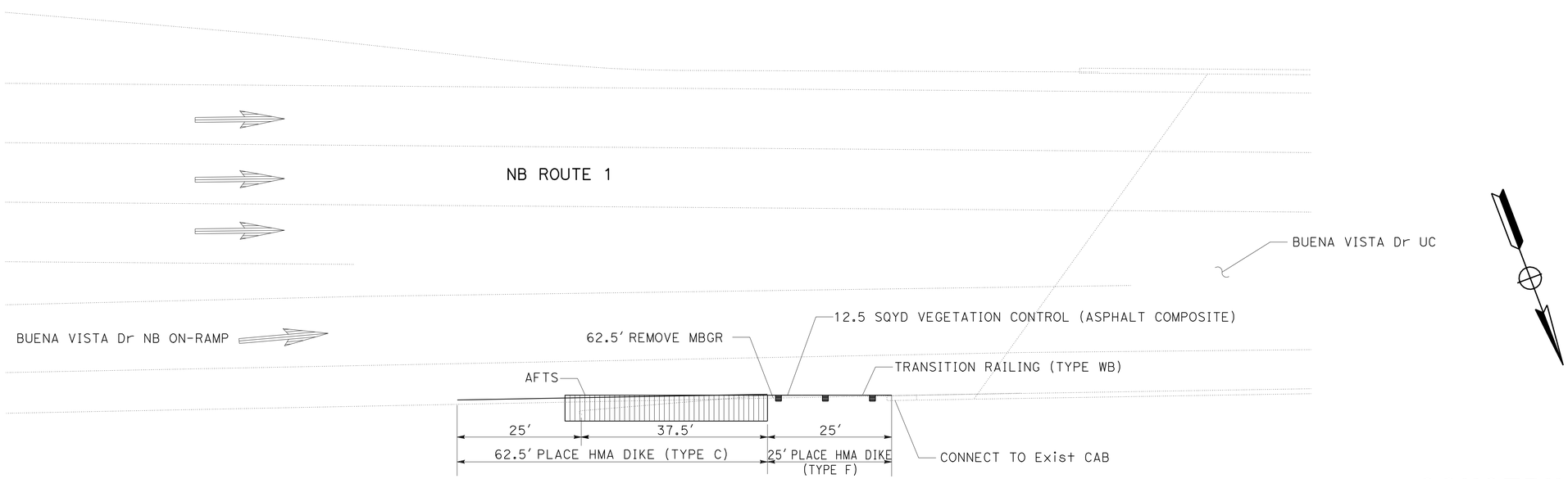

LOCATION 12

PM R4.07
TYPE 12B LAYOUT

EXISTING UTILITY FACILITIES HAVE NOT BEEN PLOTTED ON THESE PLANS

CONSTRUCTION DETAILS

NO SCALE

C-20

STATE OF CALIFORNIA - DEPARTMENT OF TRANSPORTATION
Caltrans®
06-DESIGN

FUNCTIONAL SUPERVISOR: ROBERTO BANDA
CALCULATED-DESIGNED BY: PETER CHANDER
CHECKED BY: HAL KENYON
REVISED BY
DATE REVISED

LAST REVISION 05-20-11
DATE PLOTTED => 12-AUG-2011
TIME PLOTTED => 11:09

Dist	COUNTY	ROUTE	POST MILES TOTAL PROJECT	SHEET No.	TOTAL SHEETS
05	SCr	1	R0.0/10.2	25	157

REGISTERED CIVIL ENGINEER 5-20-11 DATE

6-20-11
PLANS APPROVAL DATE

REGISTERED PROFESSIONAL ENGINEER
PETER A CHANDER
No. 63988
Exp. 09-30-12
CIVIL
STATE OF CALIFORNIA

THE STATE OF CALIFORNIA OR ITS OFFICERS OR AGENTS SHALL NOT BE RESPONSIBLE FOR THE ACCURACY OR COMPLETENESS OF SCANNED COPIES OF THIS PLAN SHEET.

NOTES:

1. FOR ACCURATE RIGHT OF WAY DATA, CONTACT RIGHT OF WAY ENGINEERING AT THE DISTRICT OFFICE.

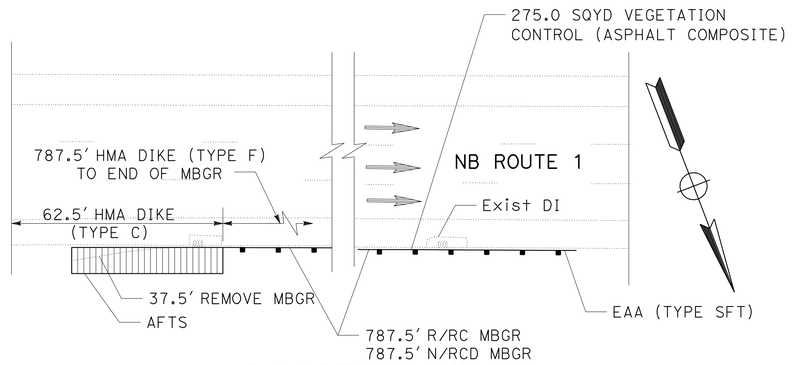

LOCATION 13
PM R4.19 TO R4.35
TYPE 11B LAYOUT

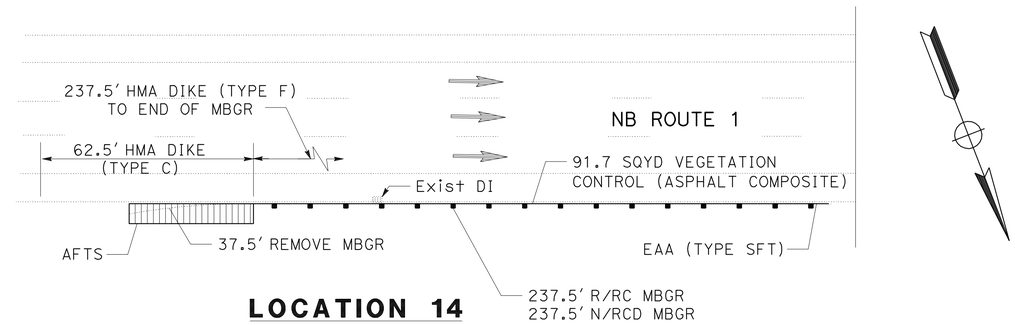

LOCATION 14
PM 4.44 TO 4.48
TYPE 11B LAYOUT

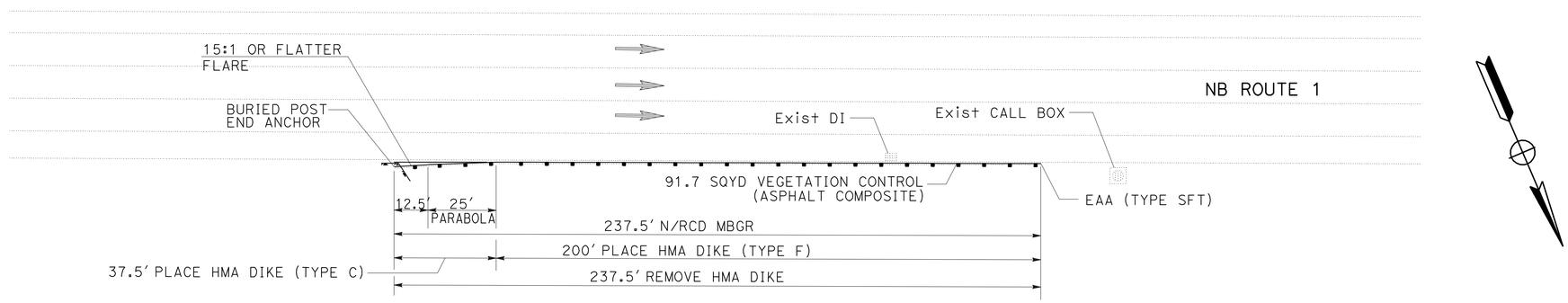

LOCATION 15
PM R5.03
TYPE 11C LAYOUT

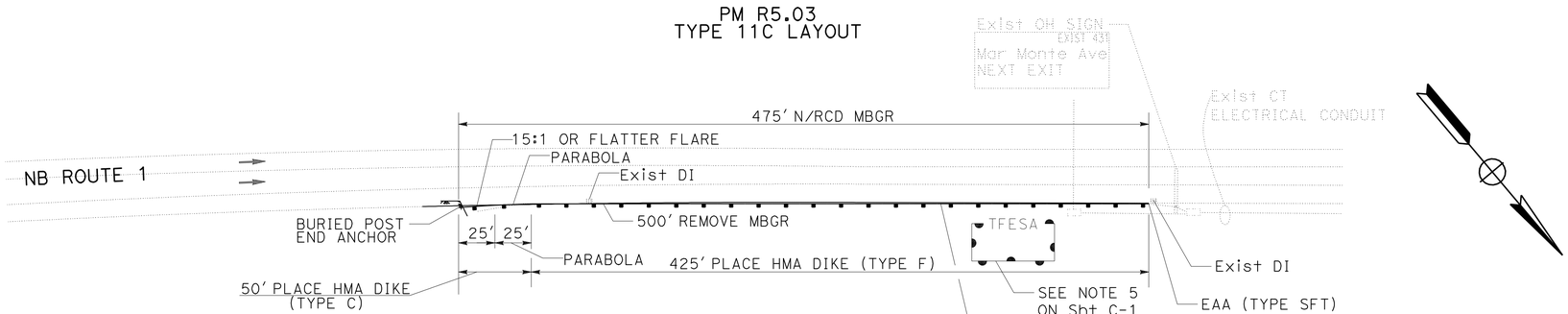

LOCATION 16
PM R5.84
TYPE 11C LAYOUT

EXISTING UTILITY FACILITIES HAVE NOT BEEN PLOTTED ON THESE PLANS

CONSTRUCTION DETAILS

NO SCALE

C-21

STATE OF CALIFORNIA - DEPARTMENT OF TRANSPORTATION
Caltrans®
06-DESIGN

FUNCTIONAL SUPERVISOR: ROBERTO BANDA
CALCULATED-DESIGNED BY: PETER CHANDER
CHECKED BY: HAL KENYON
REVISED BY
DATE REVISED

LAST REVISION 05-20-11
DATE PLOTTED => 12-AUG-2011
TIME PLOTTED => 11:10

Dist	COUNTY	ROUTE	POST MILES TOTAL PROJECT	SHEET No.	TOTAL SHEETS
05	SCr	1	R0.0/10.2	26	157

REGISTERED CIVIL ENGINEER 5-20-11 DATE

6-20-11
PLANS APPROVAL DATE

REGISTERED PROFESSIONAL ENGINEER PETER A CHANDER No. 63988 Exp. 09-30-12 CIVIL STATE OF CALIFORNIA

THE STATE OF CALIFORNIA OR ITS OFFICERS OR AGENTS SHALL NOT BE RESPONSIBLE FOR THE ACCURACY OR COMPLETENESS OF SCANNED COPIES OF THIS PLAN SHEET.

NOTES:

1. FOR ACCURATE RIGHT OF WAY DATA, CONTACT RIGHT OF WAY ENGINEERING AT THE DISTRICT OFFICE.

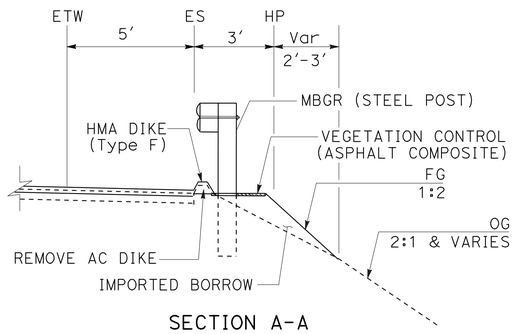

SECTION A-A

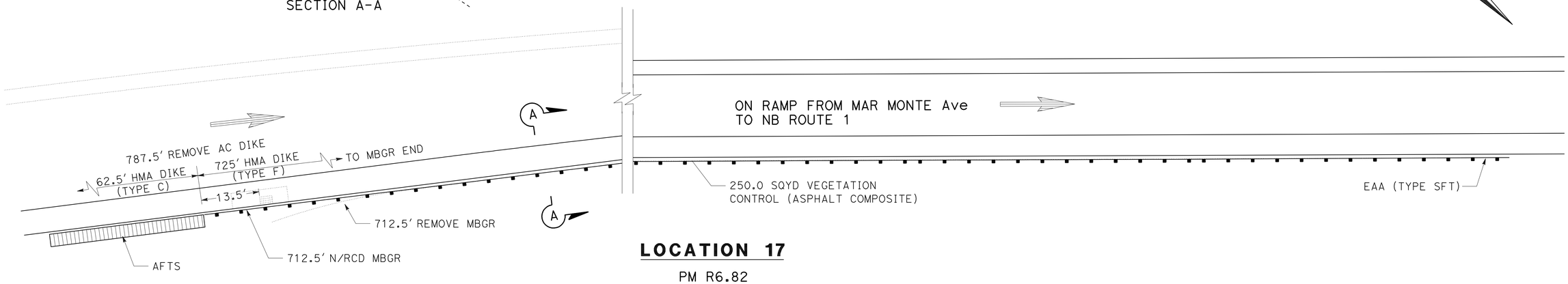

LOCATION 17

PM R6.82
TYPE 11B LAYOUT

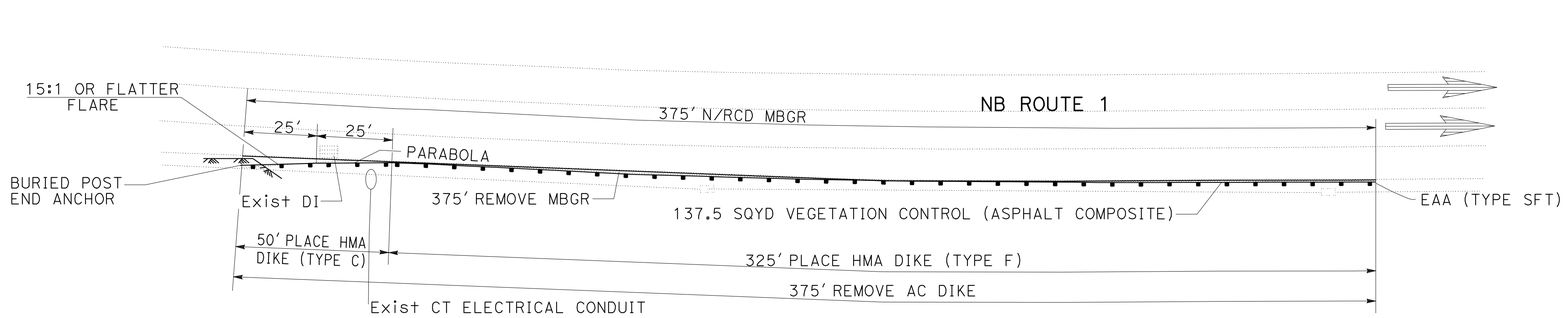

LOCATION 18

PM R7.42
TYPE 11C LAYOUT

EXISTING UTILITY FACILITIES HAVE NOT BEEN PLOTTED ON THESE PLANS

CONSTRUCTION DETAILS

NO SCALE

C-22

STATE OF CALIFORNIA - DEPARTMENT OF TRANSPORTATION
Caltrans
06-DESIGN

FUNCTIONAL SUPERVISOR: ROBERTO BANDA
CALCULATED-DESIGNED BY: PETER CHANDER
CHECKED BY: HAL KENYON
REVISED BY
DATE REVISED

LAST REVISION 05-20-11
DATE PLOTTED => 12-AUG-2011
TIME PLOTTED => 11:10

Dist	COUNTY	ROUTE	POST MILES TOTAL PROJECT	SHEET No.	TOTAL SHEETS
05	SCr	1	R0.0/10.2	27	157

REGISTERED CIVIL ENGINEER DATE 5-20-11

PLANS APPROVAL DATE 6-20-11

REGISTERED PROFESSIONAL ENGINEER PETER A CHANDER No. 63988 Exp. 09-30-12 CIVIL STATE OF CALIFORNIA

THE STATE OF CALIFORNIA OR ITS OFFICERS OR AGENTS SHALL NOT BE RESPONSIBLE FOR THE ACCURACY OR COMPLETENESS OF SCANNED COPIES OF THIS PLAN SHEET.

NOTES:

1. FOR ACCURATE RIGHT OF WAY DATA, CONTACT RIGHT OF WAY ENGINEERING AT THE DISTRICT OFFICE.

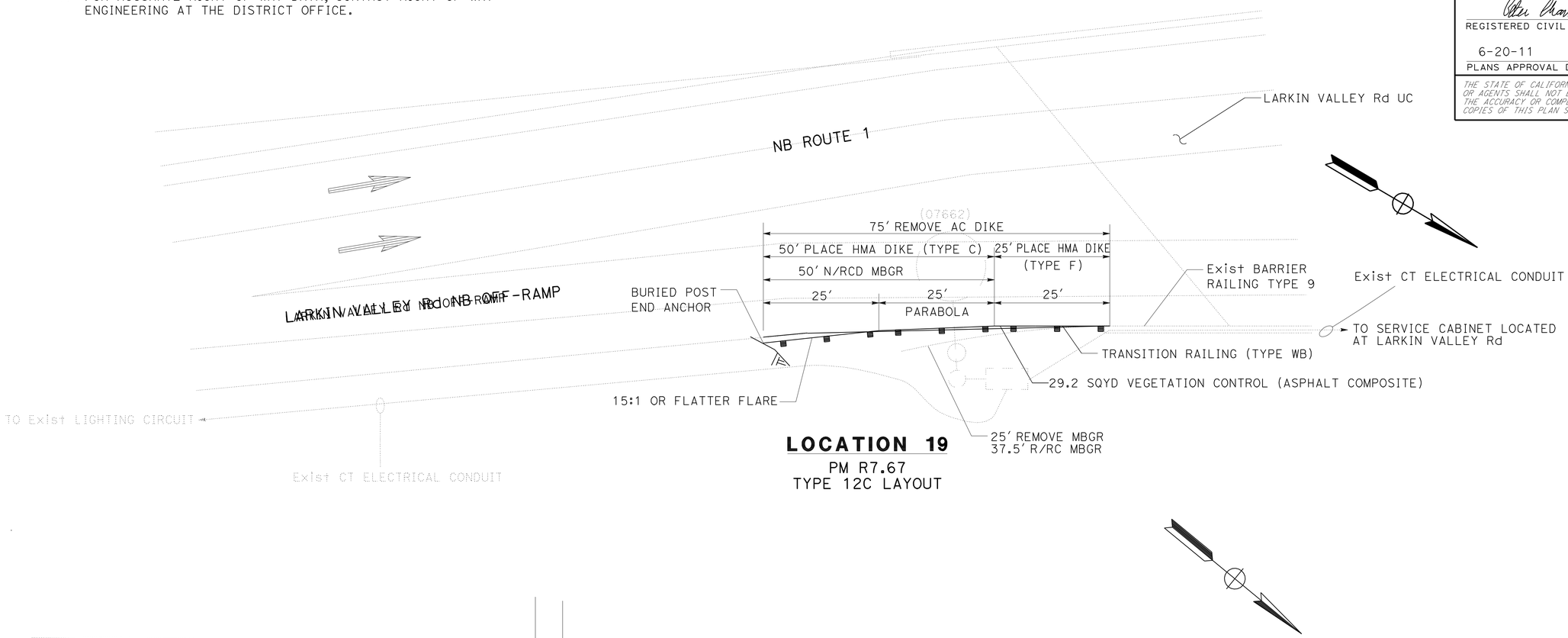

LOCATION 19

PM R7.67
TYPE 12C LAYOUT

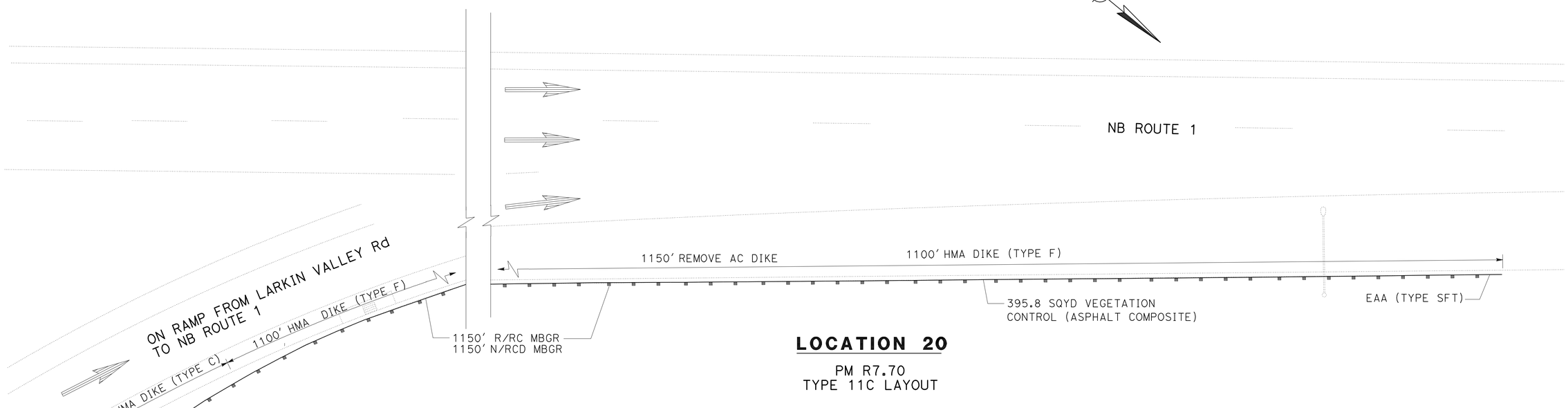

LOCATION 20

PM R7.70
TYPE 11C LAYOUT

CONSTRUCTION DETAILS

EXISTING UTILITY FACILITIES HAVE NOT BEEN PLOTTED ON THESE PLANS

NO SCALE

C-23

STATE OF CALIFORNIA - DEPARTMENT OF TRANSPORTATION

Caltrans

06-DESIGN

FUNCTIONAL SUPERVISOR: ROBERTO BANDA

CALCULATED-DESIGNED BY: PETER CHANDER

CHECKED BY: HAL KENYON

REVISED BY / DATE REVISED

LAST REVISION 05-20-11 | DATE PLOTTED => 12-AUG-2011 | TIME PLOTTED => 11:10

Dist	COUNTY	ROUTE	POST MILES TOTAL PROJECT	SHEET No.	TOTAL SHEETS
05	SCr	1	R0.0/10.2	28	157

REGISTERED CIVIL ENGINEER 5-20-11 DATE

6-20-11
PLANS APPROVAL DATE

REGISTERED PROFESSIONAL ENGINEER PETER A CHANDER No. 63988 Exp. 09-30-12 CIVIL STATE OF CALIFORNIA

THE STATE OF CALIFORNIA OR ITS OFFICERS OR AGENTS SHALL NOT BE RESPONSIBLE FOR THE ACCURACY OR COMPLETENESS OF SCANNED COPIES OF THIS PLAN SHEET.

NOTES:

1. FOR ACCURATE RIGHT OF WAY DATA, CONTACT RIGHT OF WAY ENGINEERING AT THE DISTRICT OFFICE.

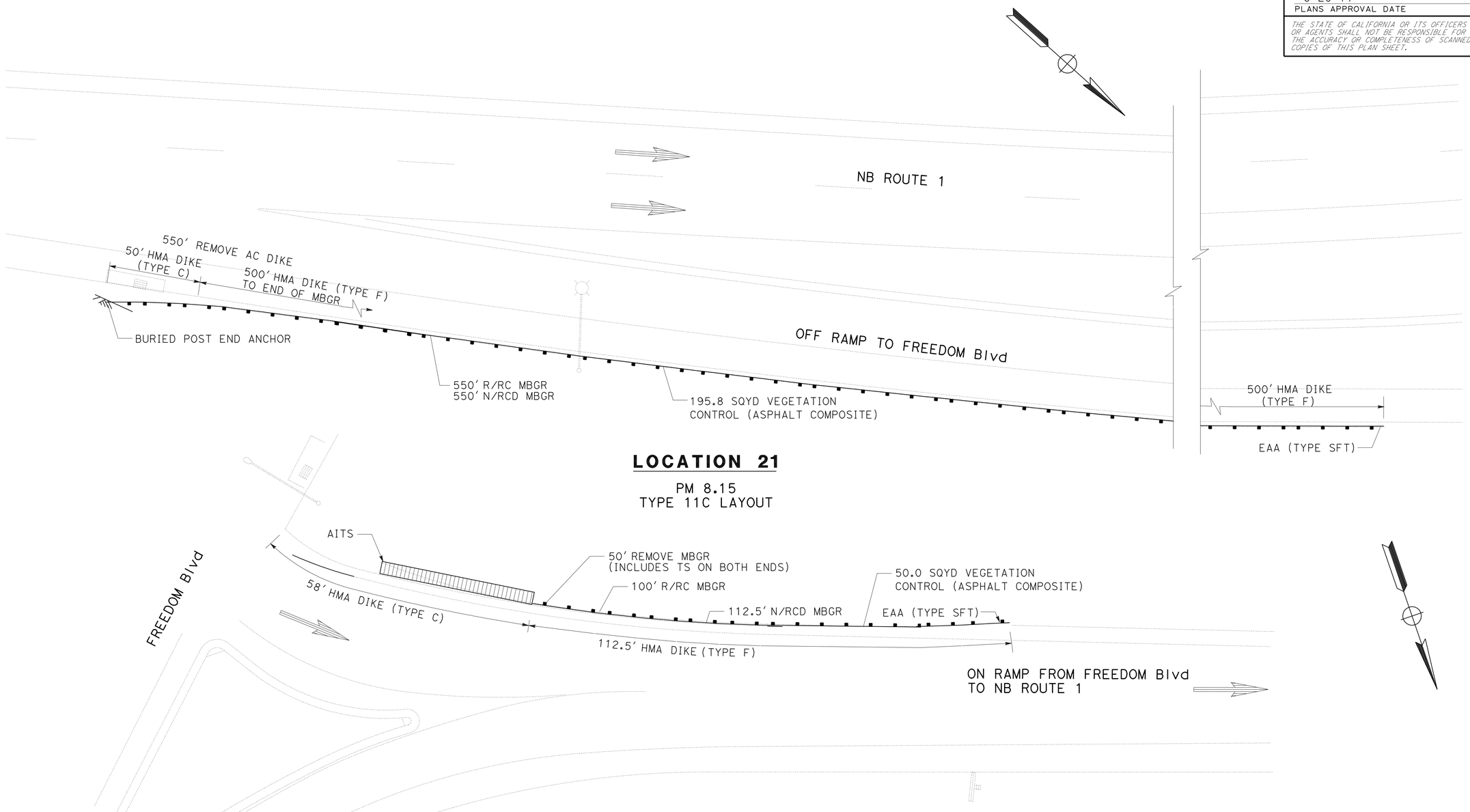

EXISTING UTILITY FACILITIES HAVE NOT BEEN PLOTTED ON THESE PLANS

CONSTRUCTION DETAILS

NO SCALE

C-24

STATE OF CALIFORNIA - DEPARTMENT OF TRANSPORTATION
Caltrans
06-DESIGN

FUNCTIONAL SUPERVISOR: ROBERTO BANDA
CALCULATED-DESIGNED BY: PETER CHANDER
CHECKED BY: HAL KENYON
REVISED BY
DATE REVISED

LAST REVISION 05-20-11
DATE PLOTTED => 12-AUG-2011
TIME PLOTTED => 11:10

Dist	COUNTY	ROUTE	POST MILES TOTAL PROJECT	SHEET No.	TOTAL SHEETS
05	SCr	1	R0.0/10.2	29	157

REGISTERED CIVIL ENGINEER 5-20-11 DATE

6-20-11
PLANS APPROVAL DATE

REGISTERED PROFESSIONAL ENGINEER
PETER A CHANDER
No. 63988
Exp. 09-30-12
CIVIL
STATE OF CALIFORNIA

THE STATE OF CALIFORNIA OR ITS OFFICERS OR AGENTS SHALL NOT BE RESPONSIBLE FOR THE ACCURACY OR COMPLETENESS OF SCANNED COPIES OF THIS PLAN SHEET.

NOTES:

1. FOR ACCURATE RIGHT OF WAY DATA, CONTACT RIGHT OF WAY ENGINEERING AT THE DISTRICT OFFICE.

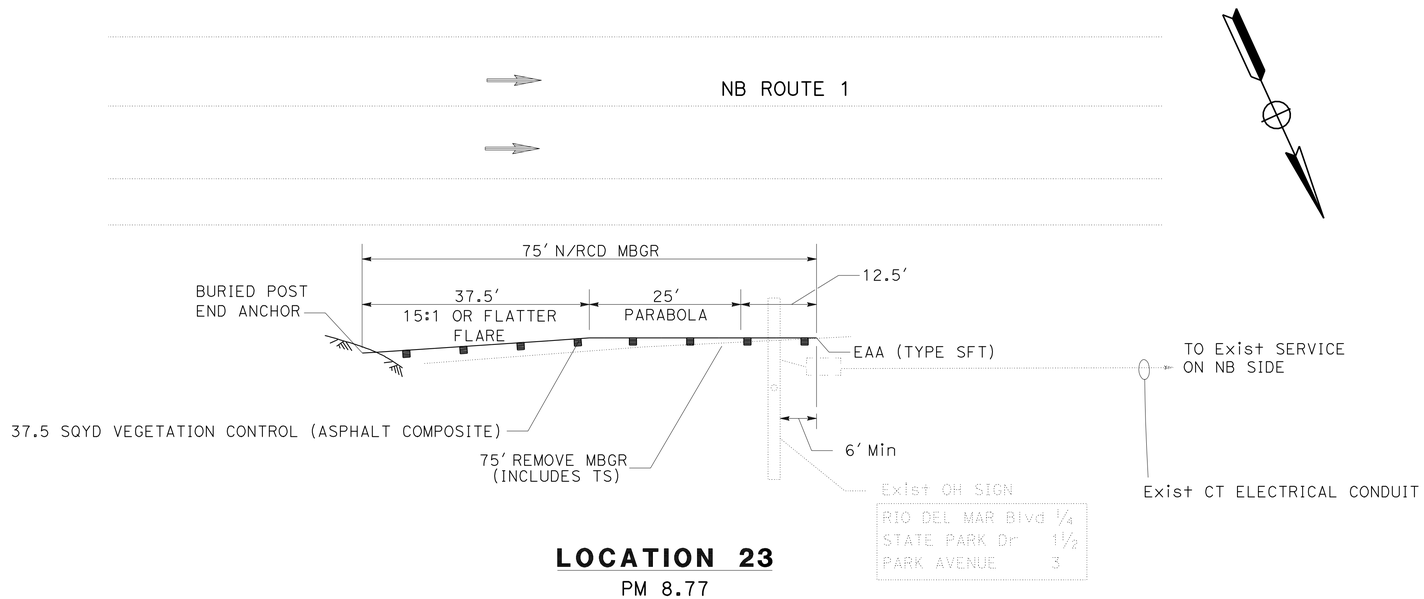

LOCATION 23

PM 8.77
TYPE 16C LAYOUT

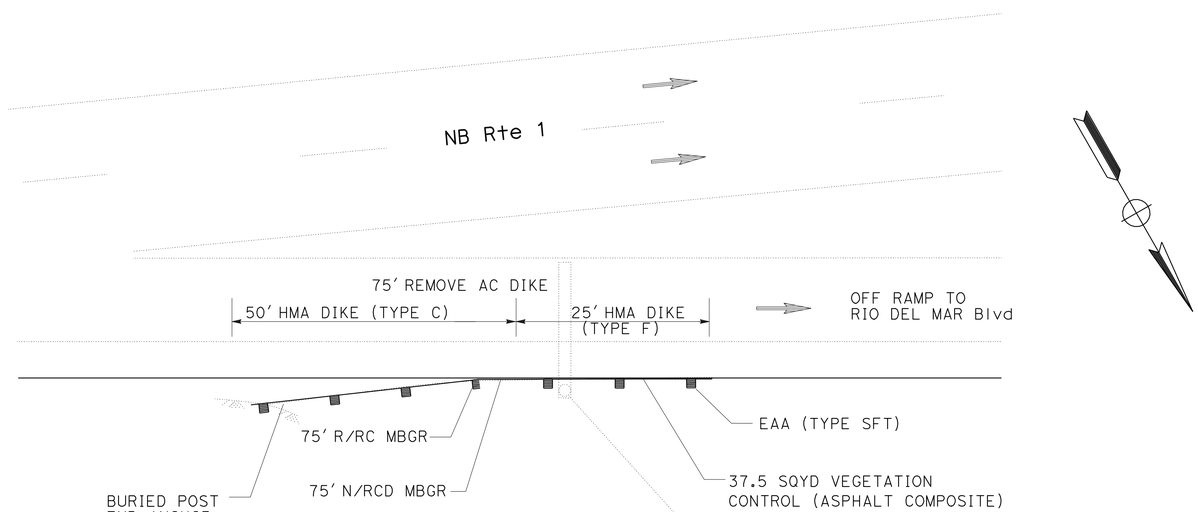

LOCATION 24

PM 9.0
TYPE 16B LAYOUT

EXISTING UTILITY FACILITIES HAVE NOT BEEN PLOTTED ON THESE PLANS

CONSTRUCTION DETAILS

NO SCALE

C-25

STATE OF CALIFORNIA - DEPARTMENT OF TRANSPORTATION
Caltrans 06-DESIGN

FUNCTIONAL SUPERVISOR: ROBERTO BANDA
CALCULATED-DESIGNED BY: PETER CHANDER
CHECKED BY: HAL KENYON
REVISED BY
DATE REVISED

LAST REVISION 05-20-11
DATE PLOTTED => 12-AUG-2011
TIME PLOTTED => 11:10

Dist	COUNTY	ROUTE	POST MILES TOTAL PROJECT	SHEET No.	TOTAL SHEETS
05	SCr	1	R0.0/10.2	30	157

REGISTERED CIVIL ENGINEER 5-20-11 DATE

6-20-11
PLANS APPROVAL DATE

REGISTERED PROFESSIONAL ENGINEER PETER A CHANDER No. 63988 Exp. 09-30-12 CIVIL STATE OF CALIFORNIA

THE STATE OF CALIFORNIA OR ITS OFFICERS OR AGENTS SHALL NOT BE RESPONSIBLE FOR THE ACCURACY OR COMPLETENESS OF SCANNED COPIES OF THIS PLAN SHEET.

NOTES:

1. FOR ACCURATE RIGHT OF WAY DATA, CONTACT RIGHT OF WAY ENGINEERING AT THE DISTRICT OFFICE.

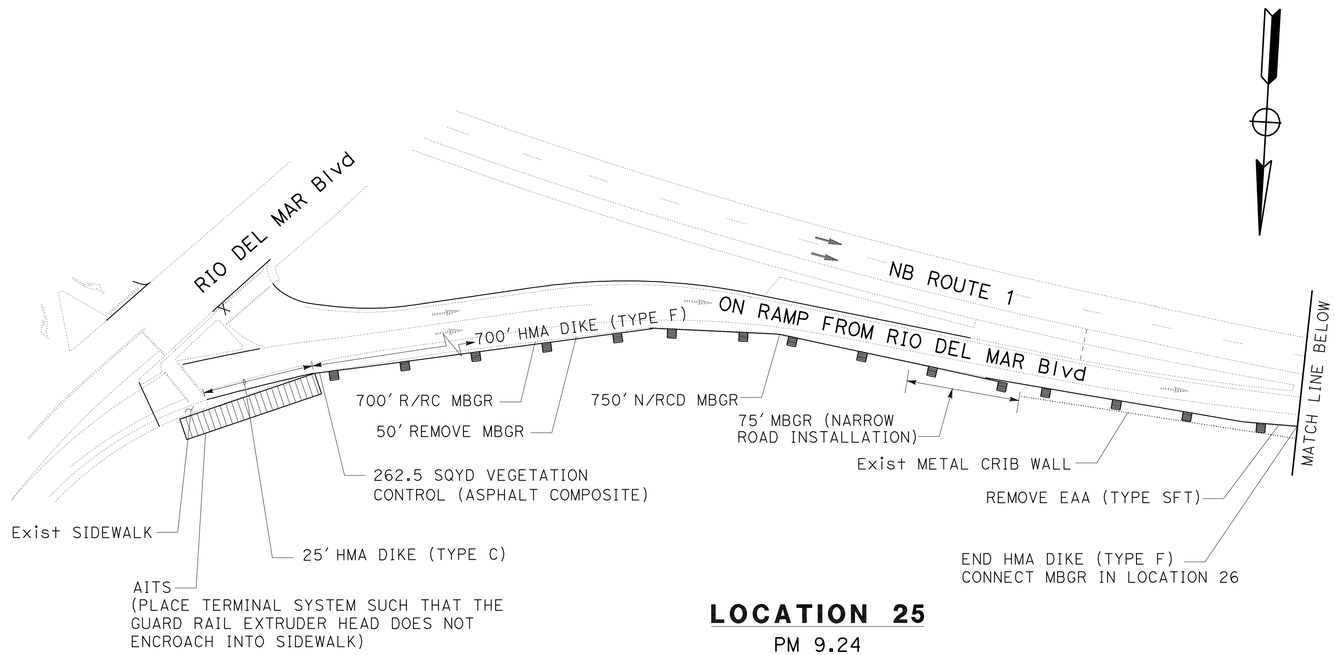

LOCATION 25

PM 9.24

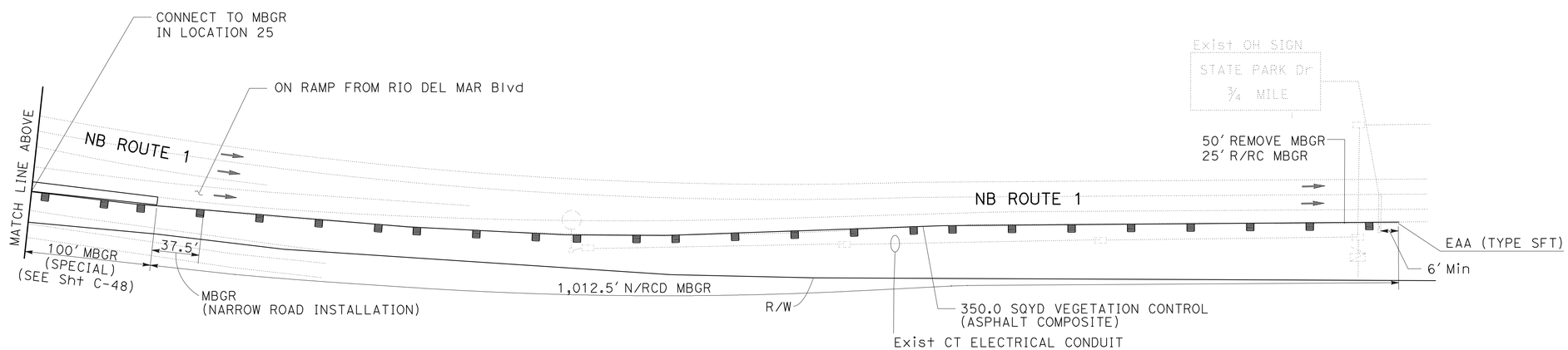

LOCATION 26

PM 9.29
TYPE 16B LAYOUT

EXISTING UTILITY FACILITIES HAVE NOT BEEN PLOTTED ON THESE PLANS

CONSTRUCTION DETAILS

NO SCALE

C-26

REVISED BY	DATE REVISED

CALCULATED-DESIGNED BY	CHECKED BY
PETER CHANDER	HAL KENYON

FUNCTIONAL SUPERVISOR: ROBERTO BANDA

STATE OF CALIFORNIA - DEPARTMENT OF TRANSPORTATION

Caltrans®

06-DESIGN

LAST REVISION 05-20-11 | DATE PLOTTED => 12-AUG-2011 | TIME PLOTTED => 11:10

Dist	COUNTY	ROUTE	POST MILES TOTAL PROJECT	SHEET No.	TOTAL SHEETS
05	SCr	1	R0.0/10.2	31	157

REGISTERED CIVIL ENGINEER DATE 5-20-11

PLANS APPROVAL DATE 6-20-11

REGISTERED PROFESSIONAL ENGINEER PETER A CHANDER No. 63988 Exp. 09-30-12 CIVIL STATE OF CALIFORNIA

THE STATE OF CALIFORNIA OR ITS OFFICERS OR AGENTS SHALL NOT BE RESPONSIBLE FOR THE ACCURACY OR COMPLETENESS OF SCANNED COPIES OF THIS PLAN SHEET.

NOTES:

1. FOR ACCURATE RIGHT OF WAY DATA, CONTACT RIGHT OF WAY ENGINEERING AT THE DISTRICT OFFICE.

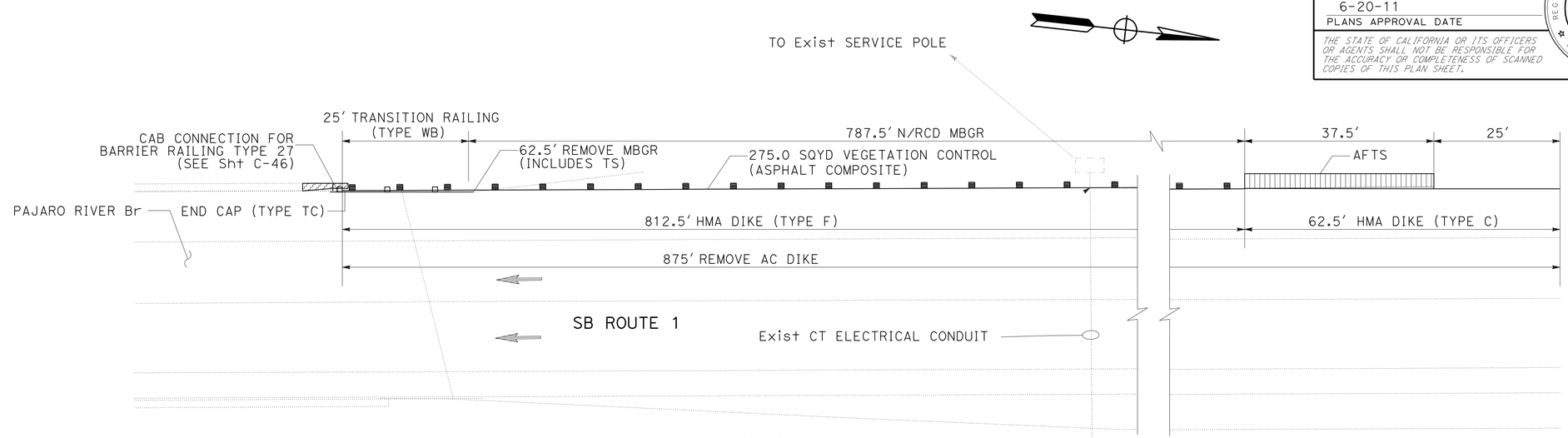

LOCATION 27

PM R0.04
TYPE 12B LAYOUT

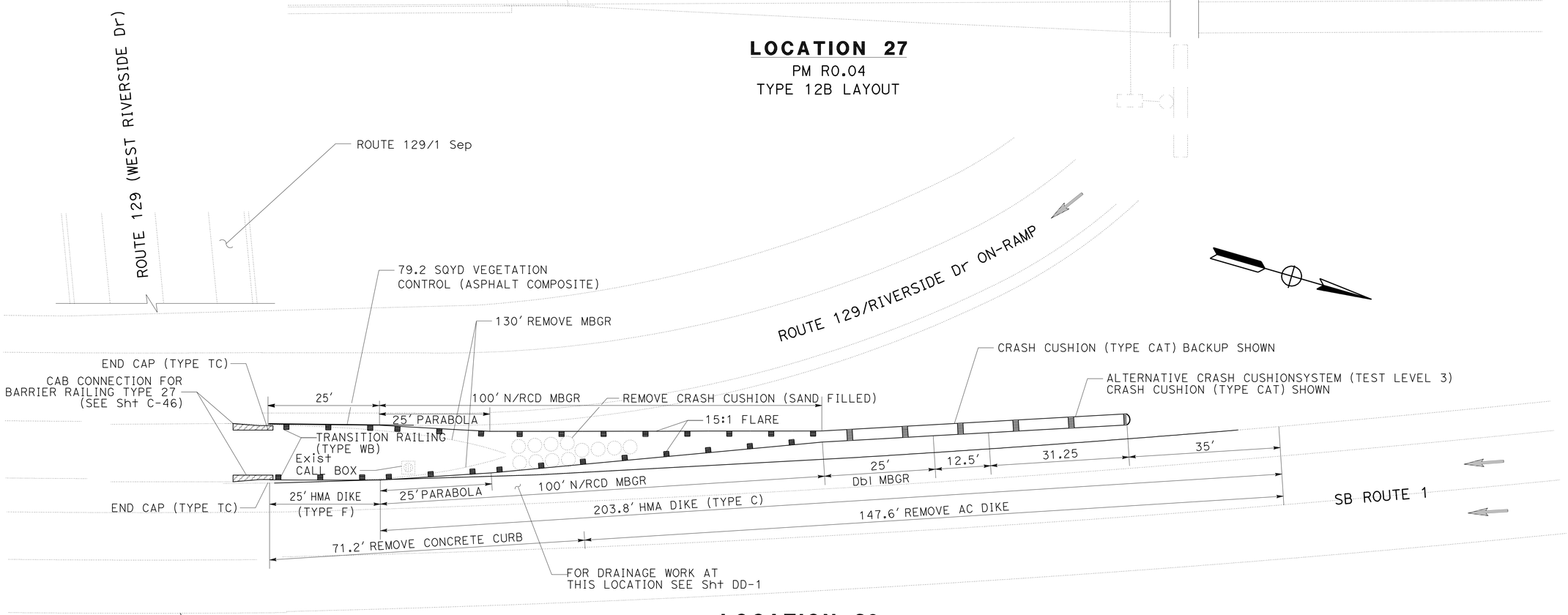

LOCATION 28

PM R0.72
TYPE 15A LAYOUT

EXISTING UTILITY FACILITIES HAVE NOT BEEN PLOTTED ON THESE PLANS

CONSTRUCTION DETAILS

NO SCALE

C-27

STATE OF CALIFORNIA - DEPARTMENT OF TRANSPORTATION
Caltrans 06-DESIGN

FUNCTIONAL SUPERVISOR: ROBERTO BANDA
CALCULATED-DESIGNED BY: PETER CHANDER
CHECKED BY: HAL KENYON
REVISED BY / DATE REVISED

LAST REVISION 05-20-11
DATE PLOTTED => 12-AUG-2011
TIME PLOTTED => 11:10

Dist	COUNTY	ROUTE	POST MILES TOTAL PROJECT	SHEET No.	TOTAL SHEETS
05	SCr	1	R0.0/10.2	32	157

REGISTERED CIVIL ENGINEER 5-20-11 DATE

6-20-11
PLANS APPROVAL DATE

REGISTERED PROFESSIONAL ENGINEER
PETER A CHANDER
No. 63988
Exp. 09-30-12
CIVIL
STATE OF CALIFORNIA

THE STATE OF CALIFORNIA OR ITS OFFICERS OR AGENTS SHALL NOT BE RESPONSIBLE FOR THE ACCURACY OR COMPLETENESS OF SCANNED COPIES OF THIS PLAN SHEET.

NOTES:

1. FOR ACCURATE RIGHT OF WAY DATA, CONTACT RIGHT OF WAY ENGINEERING AT THE DISTRICT OFFICE.

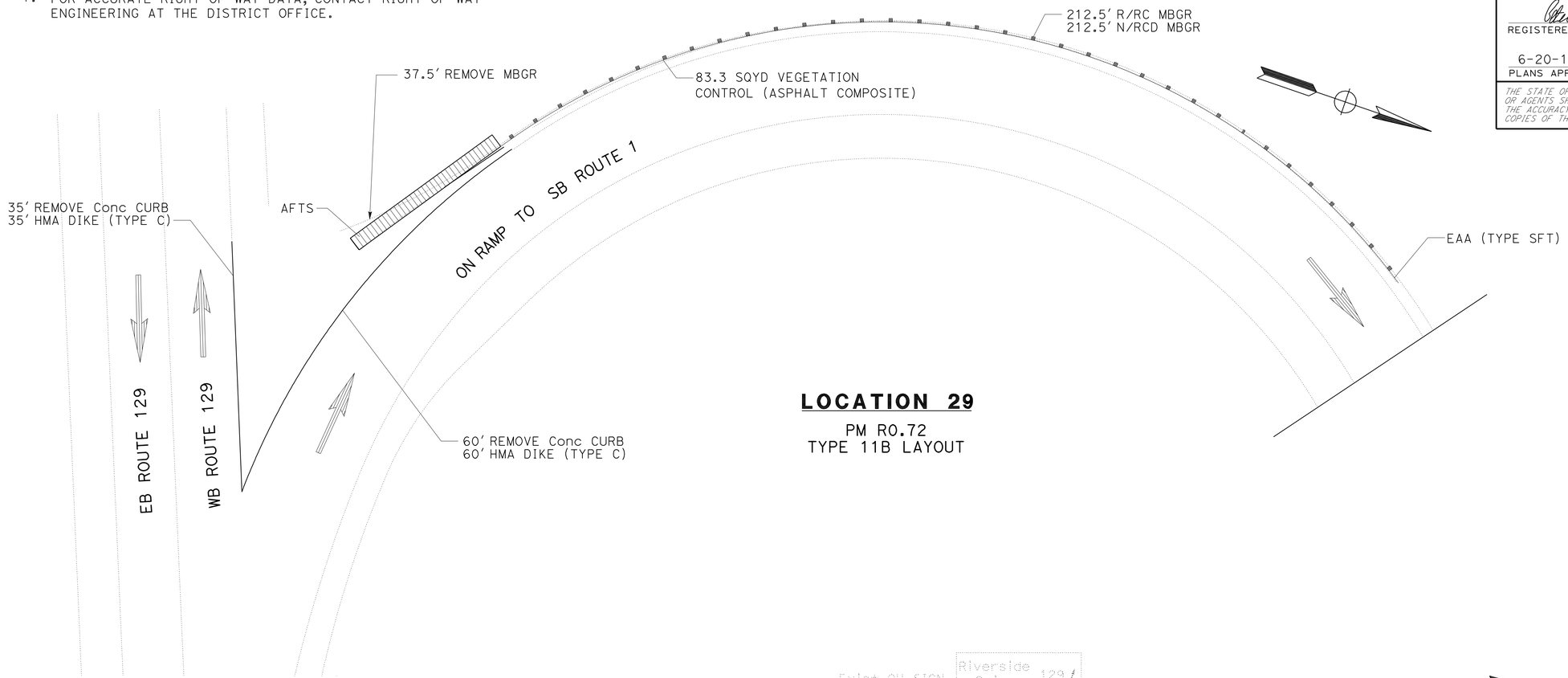

LOCATION 29

PM R0.72
TYPE 11B LAYOUT

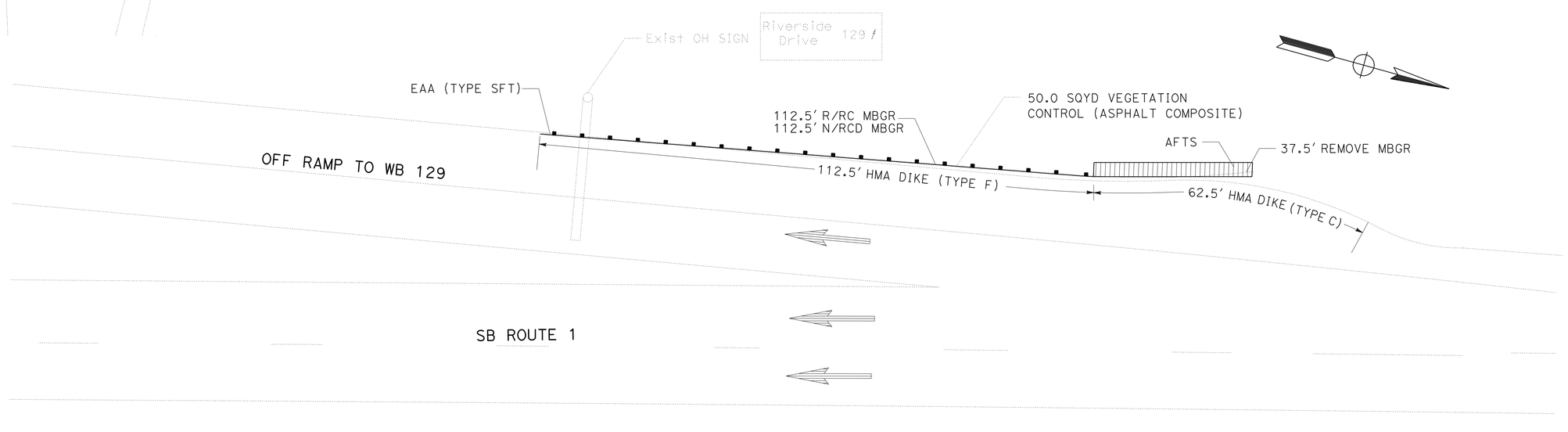

LOCATION 30

PM R0.97
TYPE 16B LAYOUT

EXISTING UTILITY FACILITIES HAVE NOT BEEN PLOTTED ON THESE PLANS

CONSTRUCTION DETAILS

NO SCALE

C-28

STATE OF CALIFORNIA - DEPARTMENT OF TRANSPORTATION
Caltrans 06-DESIGN

FUNCTIONAL SUPERVISOR: ROBERTO BANDA
CALCULATED-DESIGNED BY: PETER CHANDER
CHECKED BY: HAL KENYON
REVISED BY
DATE REVISED

LAST REVISION 05-20-11
DATE PLOTTED => 12-AUG-2011
TIME PLOTTED => 11:10

Dist	COUNTY	ROUTE	POST MILES TOTAL PROJECT	SHEET No.	TOTAL SHEETS
05	SCr	1	R0.0/10.2	33	157

REGISTERED CIVIL ENGINEER 5-20-11 DATE

6-20-11
PLANS APPROVAL DATE

REGISTERED PROFESSIONAL ENGINEER
PETER A CHANDER
No. 63988
Exp. 09-30-12
CIVIL
STATE OF CALIFORNIA

THE STATE OF CALIFORNIA OR ITS OFFICERS OR AGENTS SHALL NOT BE RESPONSIBLE FOR THE ACCURACY OR COMPLETENESS OF SCANNED COPIES OF THIS PLAN SHEET.

NOTES:

1. FOR ACCURATE RIGHT OF WAY DATA, CONTACT RIGHT OF WAY ENGINEERING AT THE DISTRICT OFFICE.

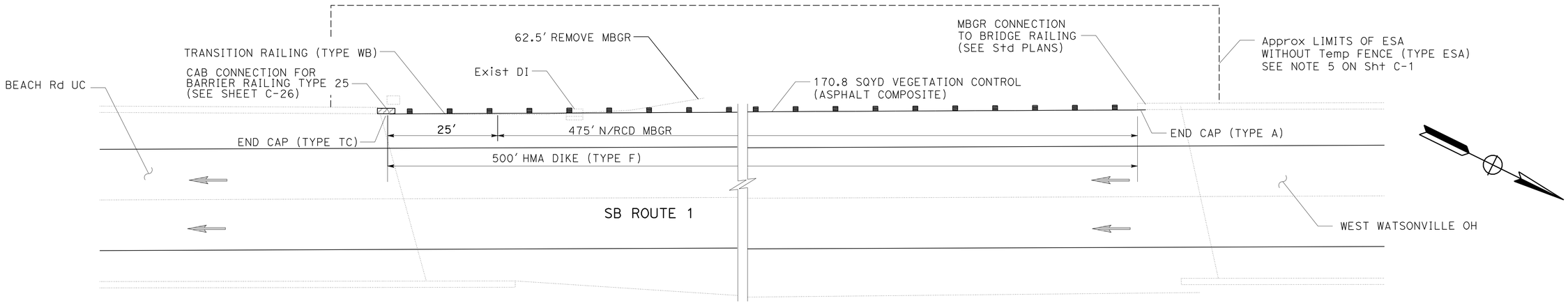

LOCATION 31

PM R1.05
TYPE 12D LAYOUT

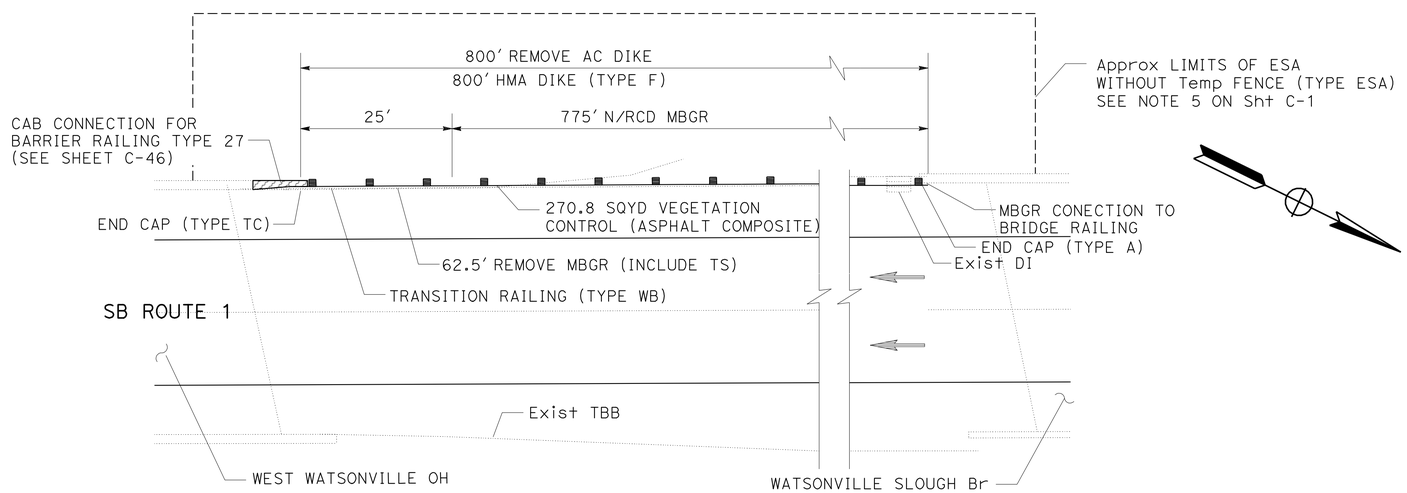

LOCATION 32

PM R1.19
TYPE 12D LAYOUT

EXISTING UTILITY FACILITIES HAVE NOT BEEN PLOTTED ON THESE PLANS

CONSTRUCTION DETAILS

NO SCALE

C-29

STATE OF CALIFORNIA - DEPARTMENT OF TRANSPORTATION
Caltrans 06-DESIGN

FUNCTIONAL SUPERVISOR: ROBERTO BANDA
CALCULATED-DESIGNED BY: PETER CHANDER
CHECKED BY: HAL KENYON
REVISED BY / DATE REVISED

LAST REVISION 05-20-11
DATE PLOTTED => 12-AUG-2011
TIME PLOTTED => 11:10

Dist	COUNTY	ROUTE	POST MILES TOTAL PROJECT	SHEET No.	TOTAL SHEETS
05	SCr	1	R0.0/10.2	34	157

REGISTERED CIVIL ENGINEER 5-20-11 DATE

6-20-11
PLANS APPROVAL DATE

REGISTERED PROFESSIONAL ENGINEER PETER A CHANDER No. 63988 Exp. 09-30-12 CIVIL STATE OF CALIFORNIA

THE STATE OF CALIFORNIA OR ITS OFFICERS OR AGENTS SHALL NOT BE RESPONSIBLE FOR THE ACCURACY OR COMPLETENESS OF SCANNED COPIES OF THIS PLAN SHEET.

NOTES:

1. FOR ACCURATE RIGHT OF WAY DATA, CONTACT RIGHT OF WAY ENGINEERING AT THE DISTRICT OFFICE.

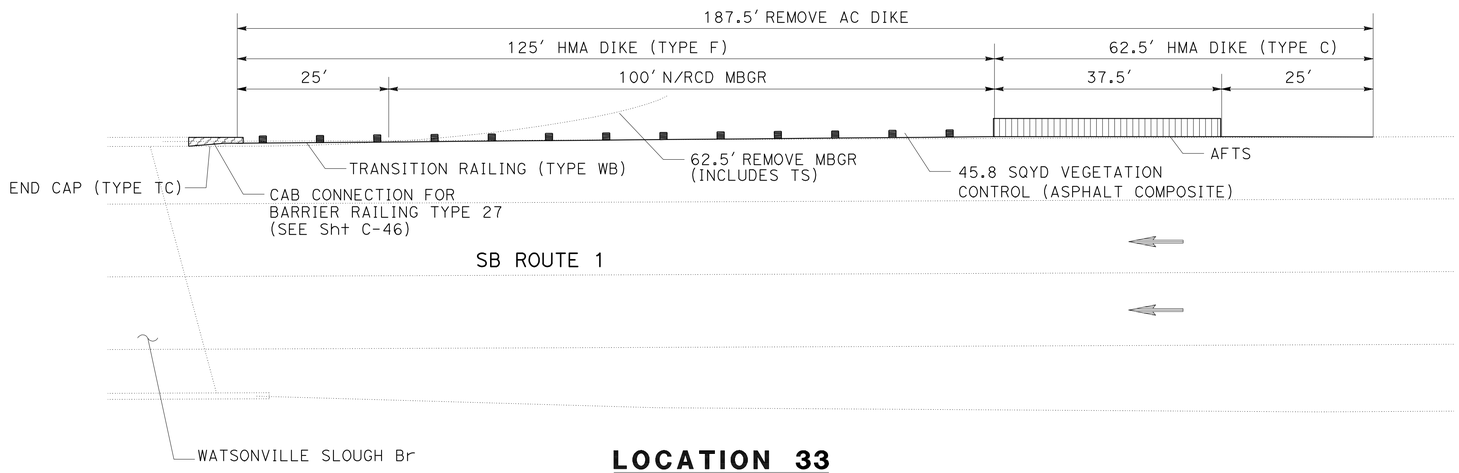

LOCATION 33

PM R1.37
TYPE 12B LAYOUT

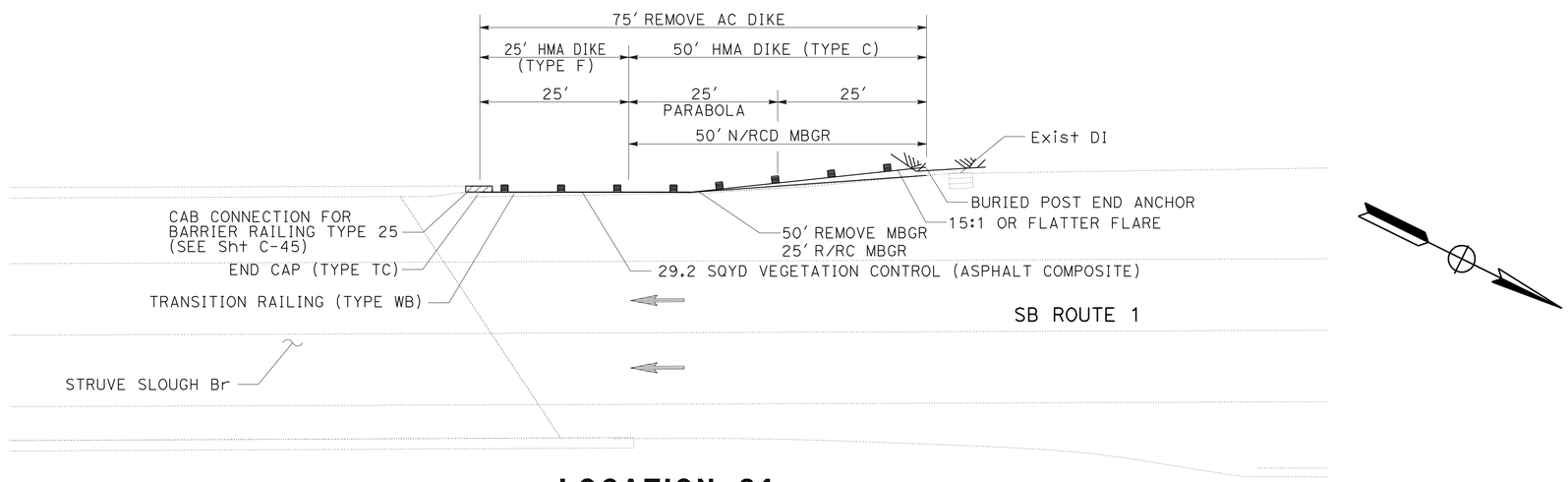

LOCATION 34

PM R1.74
TYPE 12C LAYOUT

EXISTING UTILITY FACILITIES HAVE NOT BEEN PLOTTED ON THESE PLANS

CONSTRUCTION DETAILS

NO SCALE

C-30

STATE OF CALIFORNIA - DEPARTMENT OF TRANSPORTATION
Caltrans 06-DESIGN

FUNCTIONAL SUPERVISOR: ROBERTO BANDA

CALCULATED-DESIGNED BY: PETER CHANDER
CHECKED BY: HAL KENYON

REVISED BY | DATE REVISED

LAST REVISION 05-20-11
DATE PLOTTED => 12-AUG-2011
TIME PLOTTED => 11:10

Dist	COUNTY	ROUTE	POST MILES TOTAL PROJECT	SHEET No.	TOTAL SHEETS
05	SCr	1	R0.0/10.2	35	157

REGISTERED CIVIL ENGINEER 5-20-11 DATE

6-20-11
PLANS APPROVAL DATE

REGISTERED PROFESSIONAL ENGINEER PETER A CHANDER No. 63988 Exp. 09-30-12 CIVIL STATE OF CALIFORNIA

THE STATE OF CALIFORNIA OR ITS OFFICERS OR AGENTS SHALL NOT BE RESPONSIBLE FOR THE ACCURACY OR COMPLETENESS OF SCANNED COPIES OF THIS PLAN SHEET.

NOTES:

1. FOR ACCURATE RIGHT OF WAY DATA, CONTACT RIGHT OF WAY ENGINEERING AT THE DISTRICT OFFICE.

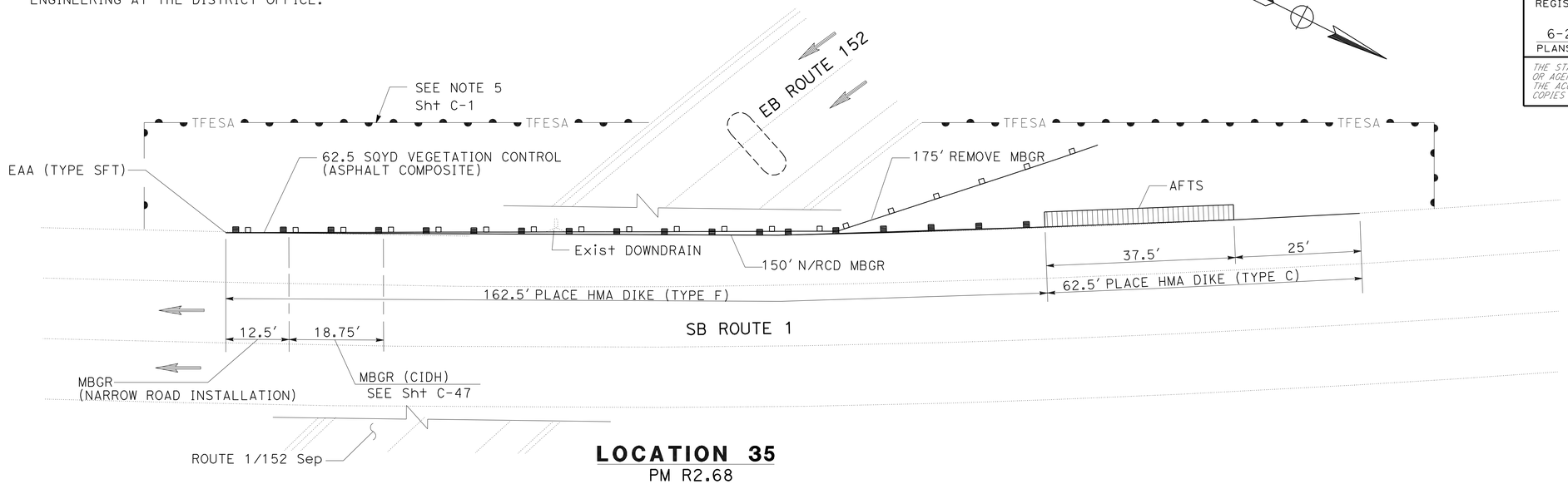

LOCATION 35

PM R2.68
TYPE 16B LAYOUT

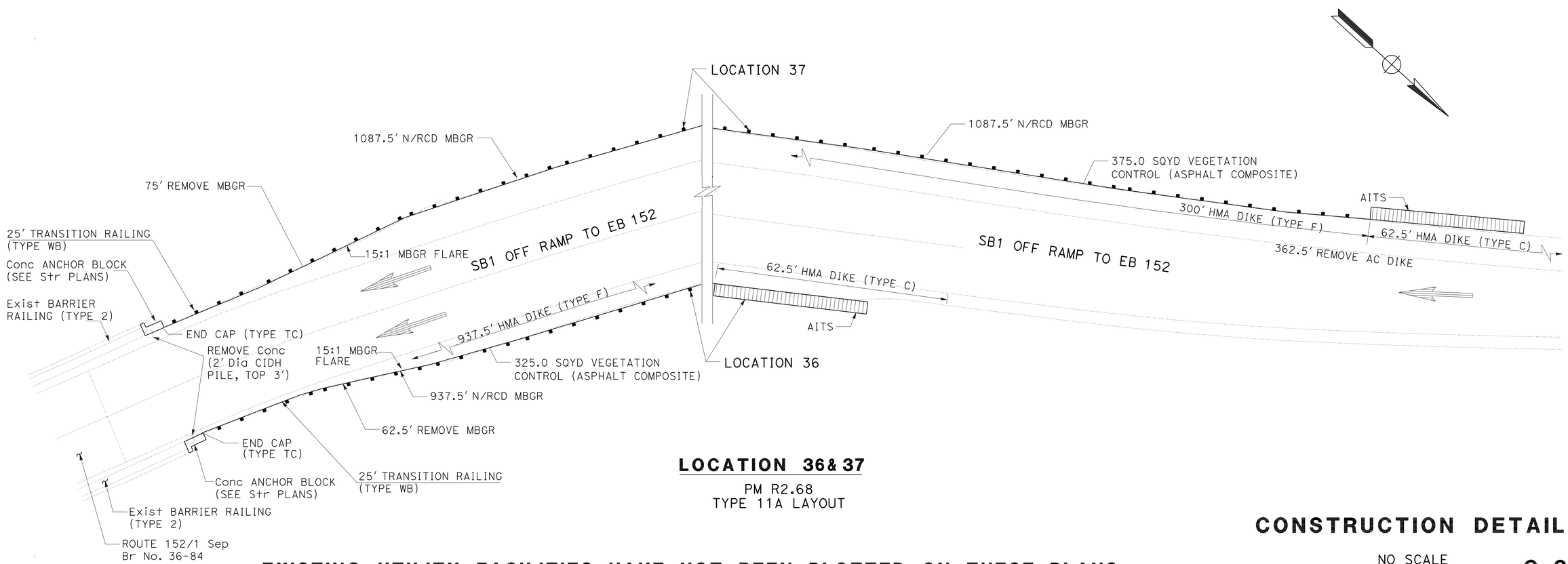

LOCATION 36& 37

PM R2.68
TYPE 11A LAYOUT

EXISTING UTILITY FACILITIES HAVE NOT BEEN PLOTTED ON THESE PLANS

CONSTRUCTION DETAILS

NO SCALE

C-31

STATE OF CALIFORNIA - DEPARTMENT OF TRANSPORTATION
Caltrans
06-DESIGN

FUNCTIONAL SUPERVISOR: ROBERTO BANDA
CALCULATED-DESIGNED BY: PETER CHANDER
CHECKED BY: HAL KENYON
REVISED BY
DATE REVISED

LAST REVISION 05-20-11
DATE PLOTTED => 12-AUG-2011
TIME PLOTTED => 11:11

Dist	COUNTY	ROUTE	POST MILES TOTAL PROJECT	SHEET No.	TOTAL SHEETS
05	SCr	1	R0.0/10.2	36	157

REGISTERED CIVIL ENGINEER 5-20-11 DATE

6-20-11
PLANS APPROVAL DATE

REGISTERED PROFESSIONAL ENGINEER
PETER A CHANDER
No. 63988
Exp. 09-30-12
CIVIL
STATE OF CALIFORNIA

THE STATE OF CALIFORNIA OR ITS OFFICERS OR AGENTS SHALL NOT BE RESPONSIBLE FOR THE ACCURACY OR COMPLETENESS OF SCANNED COPIES OF THIS PLAN SHEET.

NOTES:

1. FOR ACCURATE RIGHT OF WAY DATA, CONTACT RIGHT OF WAY ENGINEERING AT THE DISTRICT OFFICE.

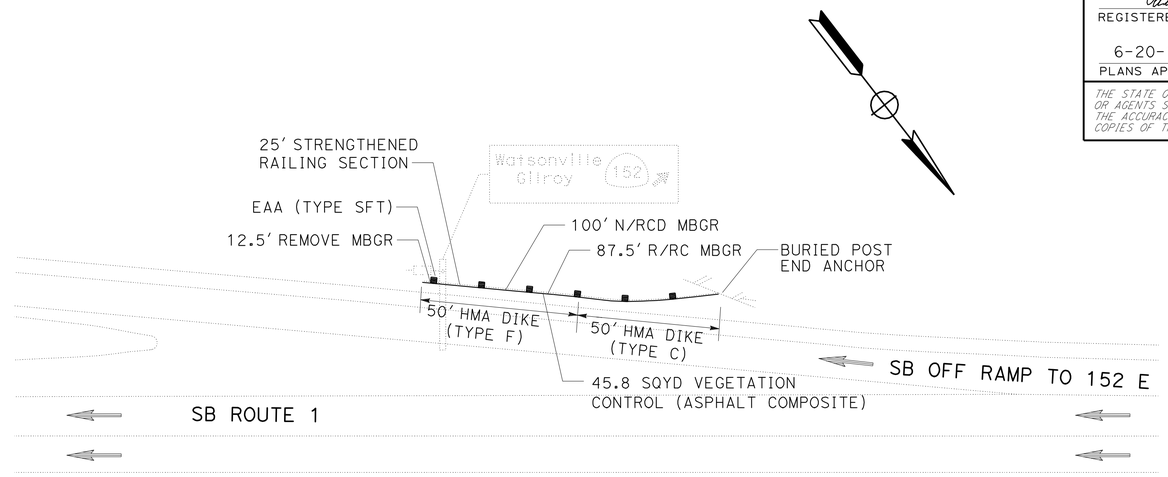

LOCATION 38
PM R2.95
TYPE 11B LAYOUT

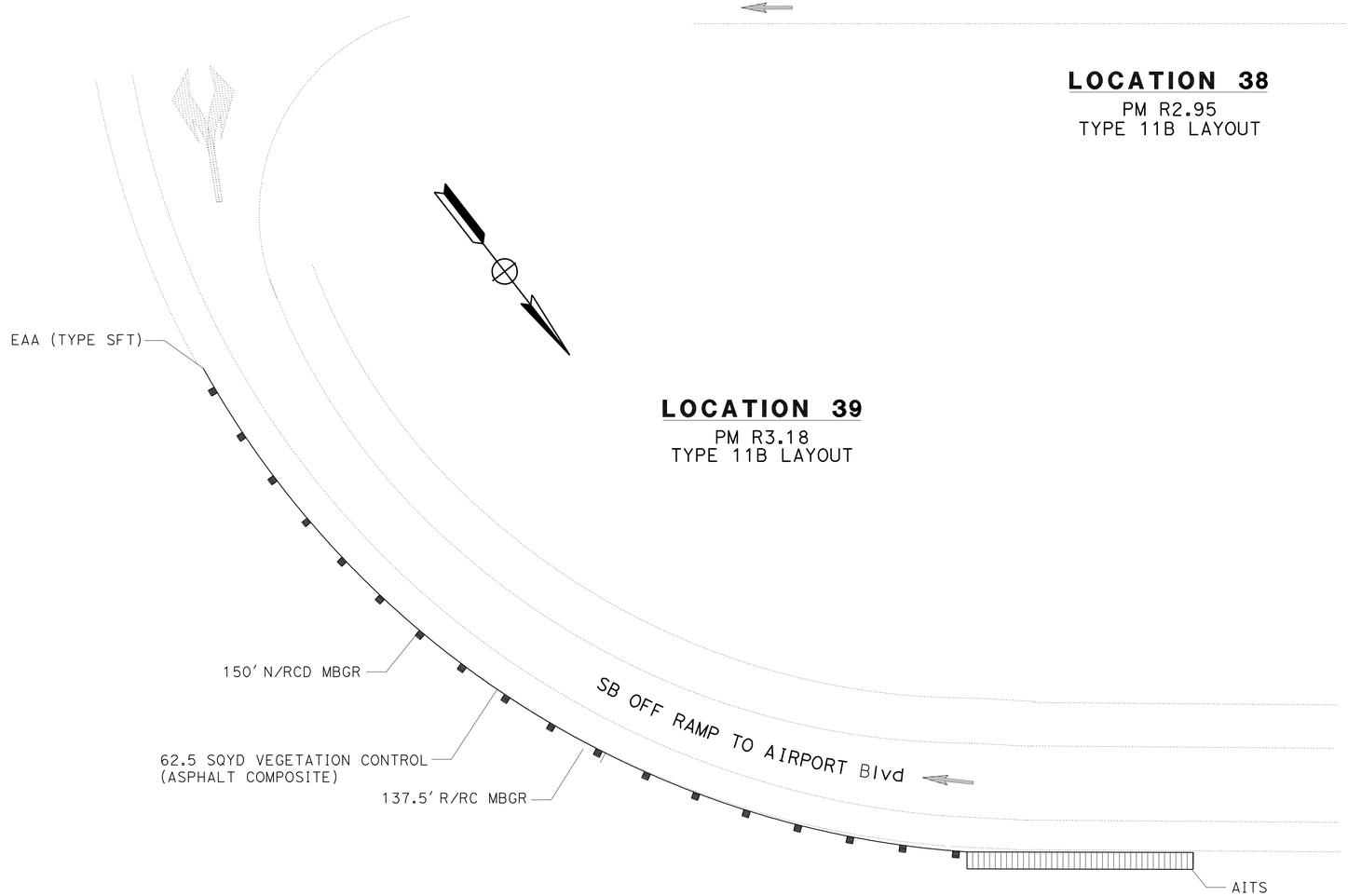

LOCATION 39
PM R3.18
TYPE 11B LAYOUT

EXISTING UTILITY FACILITIES HAVE NOT BEEN PLOTTED ON THESE PLANS

CONSTRUCTION DETAILS

NO SCALE

C-32

STATE OF CALIFORNIA - DEPARTMENT OF TRANSPORTATION
Caltrans
06-DESIGN

FUNCTIONAL SUPERVISOR: ROBERTO BANDA
CALCULATED-DESIGNED BY: PETER CHANDER
CHECKED BY: HAL KENYON
REVISED BY
DATE REVISED

LAST REVISION 05-20-11
DATE PLOTTED => 12-AUG-2011
TIME PLOTTED => 11:11

Dist	COUNTY	ROUTE	POST MILES TOTAL PROJECT	SHEET No.	TOTAL SHEETS
05	SCr	1	R0.0/10.2	37	157

REGISTERED CIVIL ENGINEER 5-20-11 DATE

6-20-11
PLANS APPROVAL DATE

REGISTERED PROFESSIONAL ENGINEER PETER A CHANDER No. 63988 Exp. 09-30-12 CIVIL STATE OF CALIFORNIA

THE STATE OF CALIFORNIA OR ITS OFFICERS OR AGENTS SHALL NOT BE RESPONSIBLE FOR THE ACCURACY OR COMPLETENESS OF SCANNED COPIES OF THIS PLAN SHEET.

NOTES:

1. FOR ACCURATE RIGHT OF WAY DATA, CONTACT RIGHT OF WAY ENGINEERING AT THE DISTRICT OFFICE.

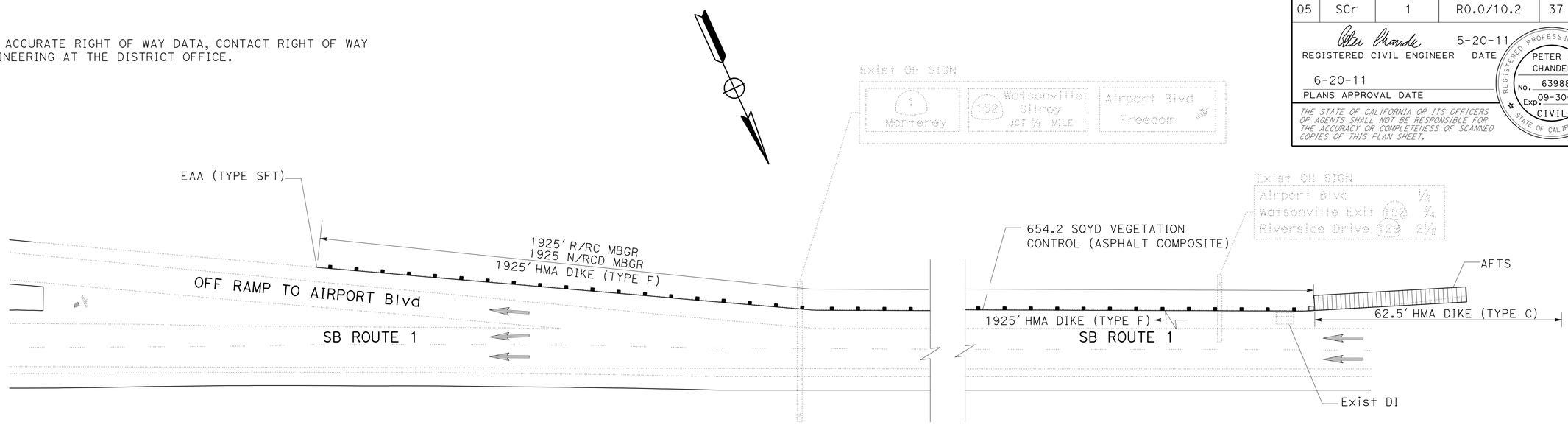

LOCATION 40

PM R3.4 TO R3.79
TYPE 11B LAYOUT

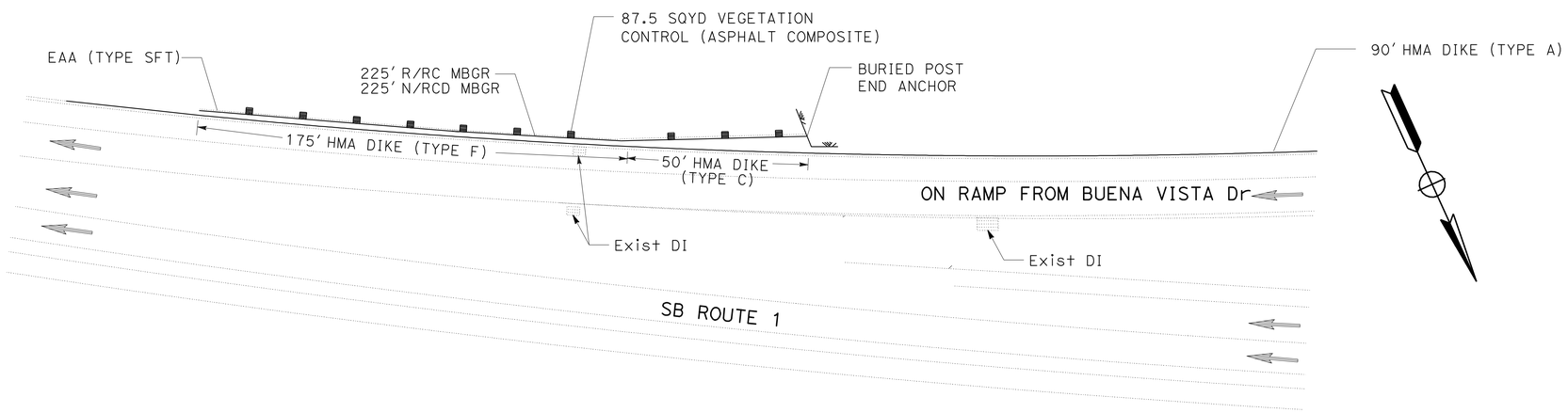

LOCATION 41

PM R3.92
TYPE 11C LAYOUT

EXISTING UTILITY FACILITIES HAVE NOT BEEN PLOTTED ON THESE PLANS

CONSTRUCTION DETAILS

NO SCALE

C-33

STATE OF CALIFORNIA - DEPARTMENT OF TRANSPORTATION
Caltrans 06-DESIGN

FUNCTIONAL SUPERVISOR: ROBERTO BANDA
CALCULATED-DESIGNED BY: PETER CHANDER
CHECKED BY: HAL KENYON
REVISED BY
DATE REVISED

LAST REVISION 05-20-11
DATE PLOTTED => 12-AUG-2011
TIME PLOTTED => 11:11

Dist	COUNTY	ROUTE	POST MILES TOTAL PROJECT	SHEET No.	TOTAL SHEETS
05	SCr	1	R0.0/10.2	38	157

REGISTERED CIVIL ENGINEER DATE 5-20-11

PLANS APPROVAL DATE 6-20-11

REGISTERED PROFESSIONAL ENGINEER PETER A CHANDER No. 63988 Exp. 09-30-12 CIVIL STATE OF CALIFORNIA

THE STATE OF CALIFORNIA OR ITS OFFICERS OR AGENTS SHALL NOT BE RESPONSIBLE FOR THE ACCURACY OR COMPLETENESS OF SCANNED COPIES OF THIS PLAN SHEET.

NOTES:

1. FOR ACCURATE RIGHT OF WAY DATA, CONTACT RIGHT OF WAY ENGINEERING AT THE DISTRICT OFFICE.

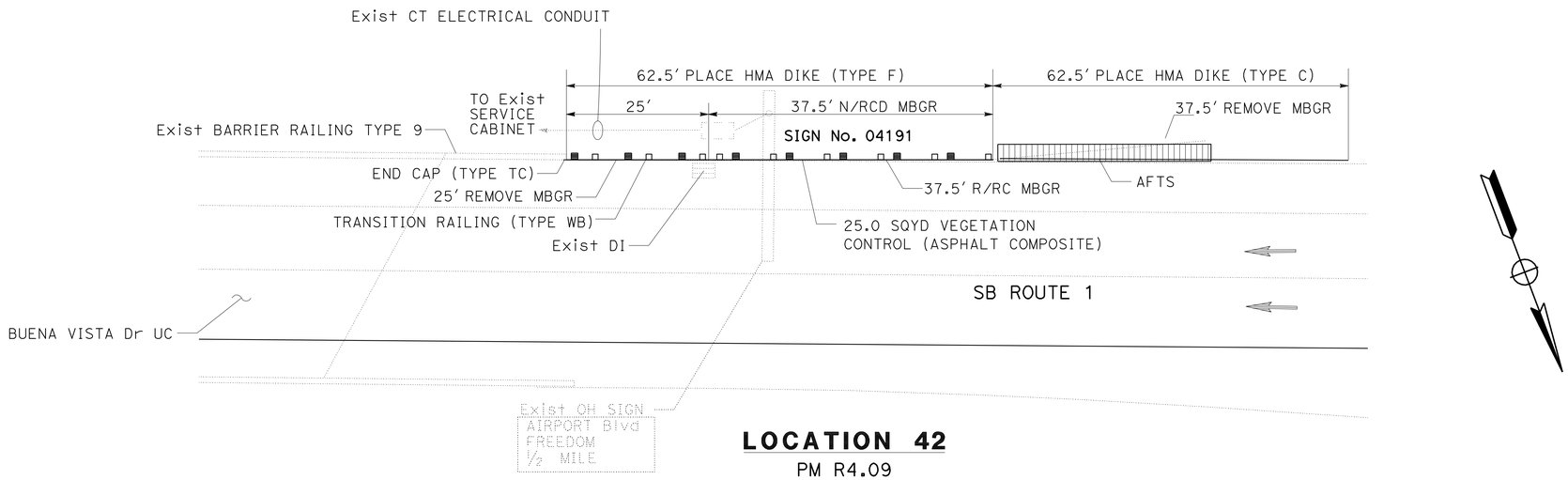

LOCATION 42

PM R4.09
TYPE 12B LAYOUT

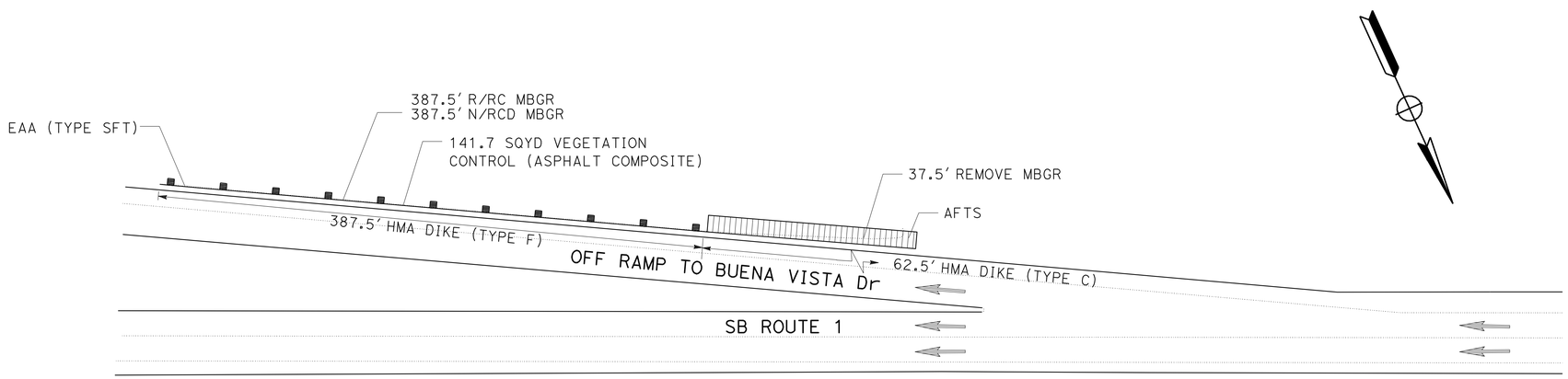

LOCATION 43

PM R4.40
TYPE 11B LAYOUT

EXISTING UTILITY FACILITIES HAVE NOT BEEN PLOTTED ON THESE PLANS

CONSTRUCTION DETAILS

NO SCALE

C-34

STATE OF CALIFORNIA - DEPARTMENT OF TRANSPORTATION
Caltrans® 06-DESIGN

FUNCTIONAL SUPERVISOR: ROBERTO BANDA
CALCULATED-DESIGNED BY: PETER CHANDER
CHECKED BY: HAL KENYON
REVISED BY / DATE REVISED

LAST REVISION 05-20-11
DATE PLOTTED => 12-AUG-2011
TIME PLOTTED => 11:11

Dist	COUNTY	ROUTE	POST MILES TOTAL PROJECT	SHEET No.	TOTAL SHEETS
05	SCr	1	R0.0/10.2	39	157

REGISTERED CIVIL ENGINEER 5-20-11 DATE

6-20-11
PLANS APPROVAL DATE

REGISTERED PROFESSIONAL ENGINEER
PETER A CHANDER
No. 63988
Exp. 09-30-12
CIVIL
STATE OF CALIFORNIA

THE STATE OF CALIFORNIA OR ITS OFFICERS OR AGENTS SHALL NOT BE RESPONSIBLE FOR THE ACCURACY OR COMPLETENESS OF SCANNED COPIES OF THIS PLAN SHEET.

NOTES:

1. FOR ACCURATE RIGHT OF WAY DATA, CONTACT RIGHT OF WAY ENGINEERING AT THE DISTRICT OFFICE.

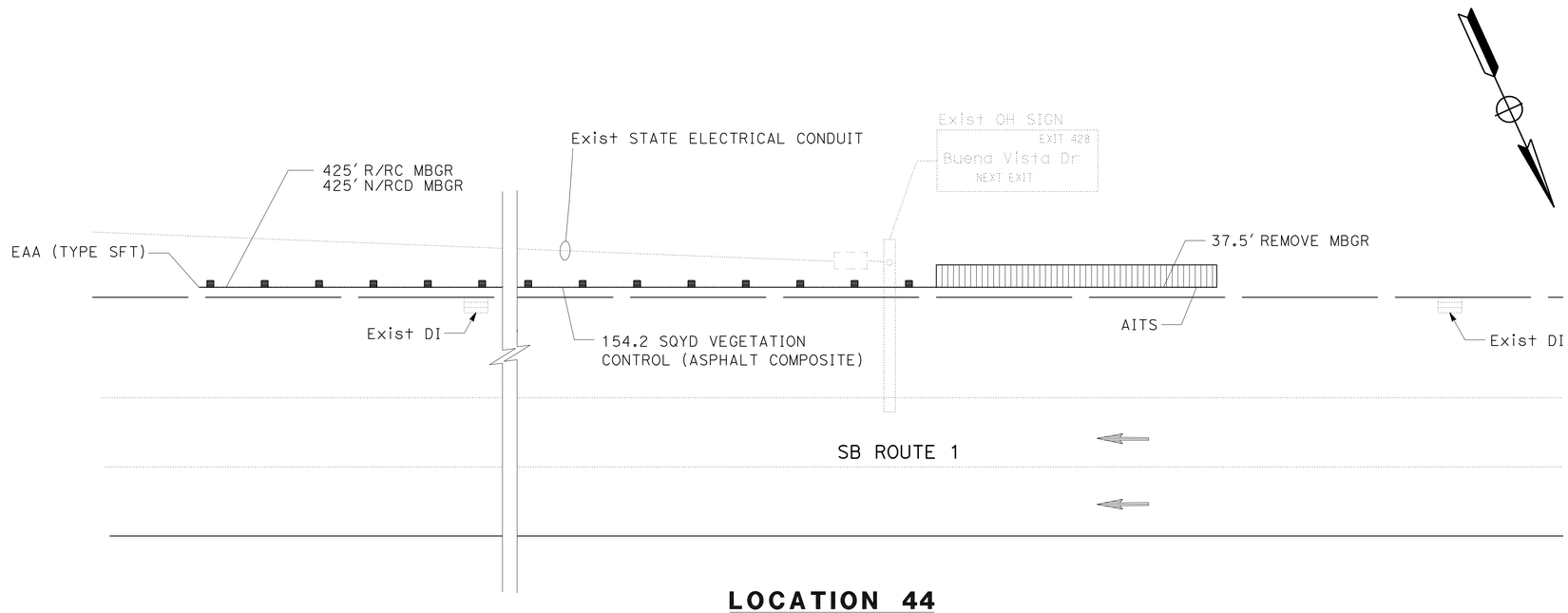

LOCATION 44

PM R4.91
TYPE 11A LAYOUT

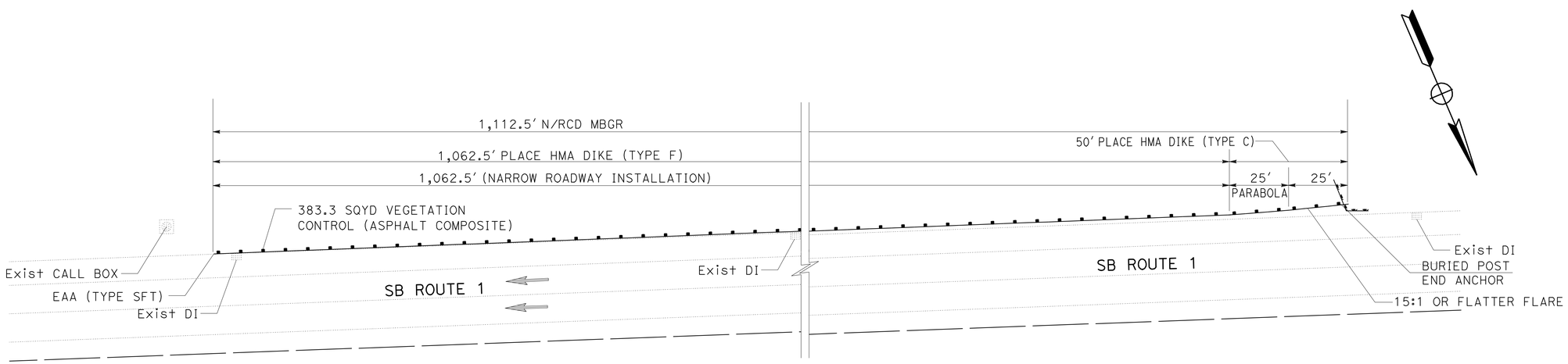

LOCATION 45

PM R5.25
TYPE 11C LAYOUT

EXISTING UTILITY FACILITIES HAVE NOT BEEN PLOTTED ON THESE PLANS

CONSTRUCTION DETAILS

NO SCALE

C-35

STATE OF CALIFORNIA - DEPARTMENT OF TRANSPORTATION
Caltrans
06-DESIGN

FUNCTIONAL SUPERVISOR: ROBERTO BANDA
CALCULATED-DESIGNED BY: PETER CHANDER
CHECKED BY: HAL KENYON
REVISED BY
DATE REVISED

LAST REVISION 05-20-11
DATE PLOTTED => 12-AUG-2011
TIME PLOTTED => 11:11

Dist	COUNTY	ROUTE	POST MILES TOTAL PROJECT	SHEET No.	TOTAL SHEETS
05	SCr	1	R0.0/10.2	40	157

REGISTERED CIVIL ENGINEER 5-20-11 DATE

6-20-11
PLANS APPROVAL DATE

REGISTERED PROFESSIONAL ENGINEER PETER A CHANDER No. 63988 Exp 09-30-12 CIVIL STATE OF CALIFORNIA

THE STATE OF CALIFORNIA OR ITS OFFICERS OR AGENTS SHALL NOT BE RESPONSIBLE FOR THE ACCURACY OR COMPLETENESS OF SCANNED COPIES OF THIS PLAN SHEET.

NOTES:

1. FOR ACCURATE RIGHT OF WAY DATA, CONTACT RIGHT OF WAY ENGINEERING AT THE DISTRICT OFFICE.

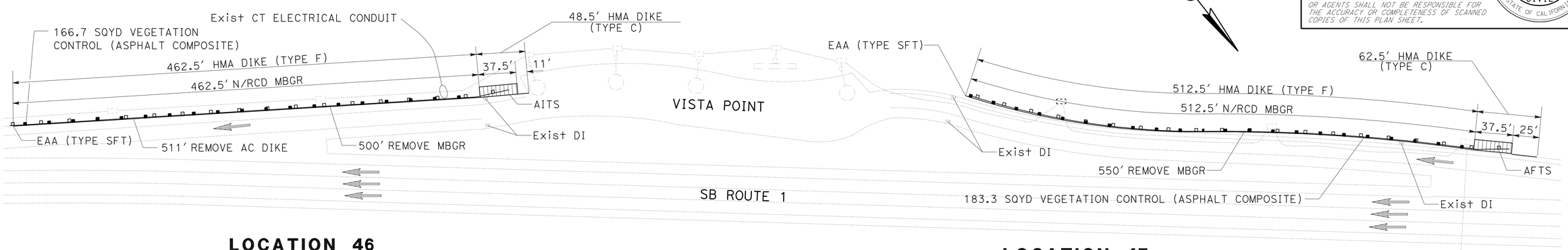

LOCATION 46
PM R5.75
TYPE 11B LAYOUT

LOCATION 47
PM R5.95
TYPE 11B LAYOUT

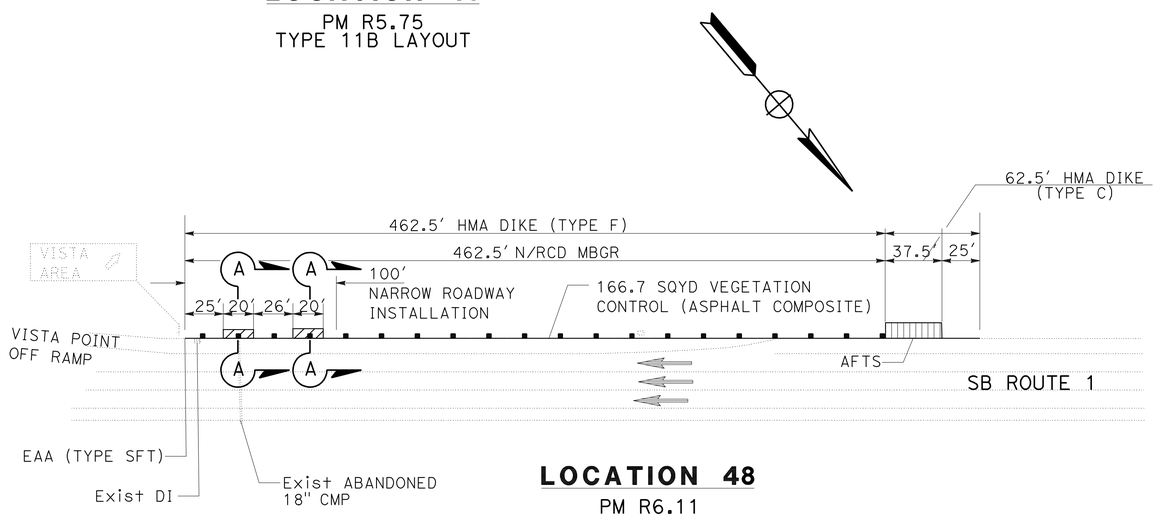

LOCATION 48
PM R6.11
TYPE 11B LAYOUT

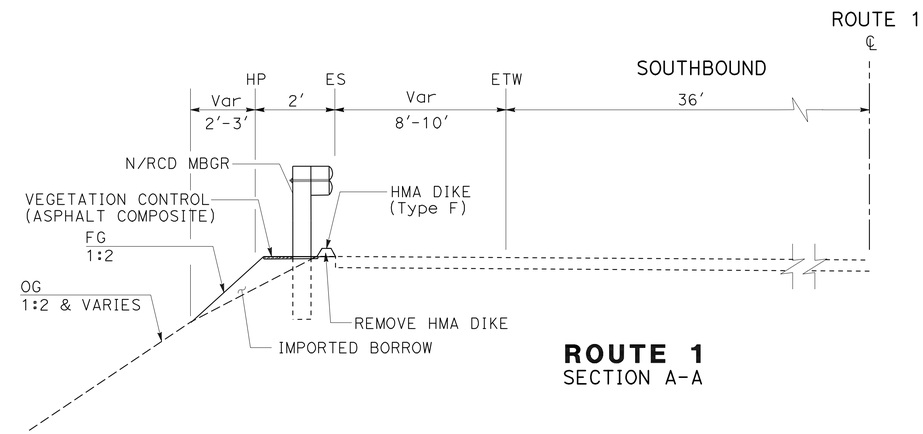

ROUTE 1
SECTION A-A

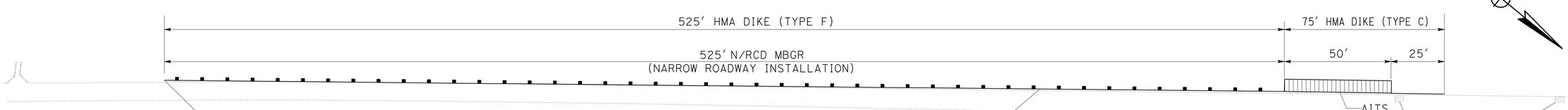

LOCATION 49
PM R6.95
TYPE 11A LAYOUT

EXISTING UTILITY FACILITIES HAVE NOT BEEN PLOTTED ON THESE PLANS

CONSTRUCTION DETAILS

NO SCALE

C-36

STATE OF CALIFORNIA - DEPARTMENT OF TRANSPORTATION
Caltrans
06-DESIGN

FUNCTIONAL SUPERVISOR: ROBERTO BANDA
CALCULATED-DESIGNED BY: PETER CHANDER
CHECKED BY: HAL KENYON
REVISED BY
DATE REVISED

LAST REVISION 05-20-11
DATE PLOTTED => 12-AUG-2011
TIME PLOTTED => 11:11

Dist	COUNTY	ROUTE	POST MILES TOTAL PROJECT	SHEET No.	TOTAL SHEETS
05	SCr	1	R0.0/10.2	41	157

REGISTERED CIVIL ENGINEER 5-20-11 DATE

6-20-11
PLANS APPROVAL DATE

REGISTERED PROFESSIONAL ENGINEER
PETER A CHANDER
No. 63988
Exp. 09-30-12
CIVIL
STATE OF CALIFORNIA

THE STATE OF CALIFORNIA OR ITS OFFICERS OR AGENTS SHALL NOT BE RESPONSIBLE FOR THE ACCURACY OR COMPLETENESS OF SCANNED COPIES OF THIS PLAN SHEET.

NOTES:

1. FOR ACCURATE RIGHT OF WAY DATA, CONTACT RIGHT OF WAY ENGINEERING AT THE DISTRICT OFFICE.

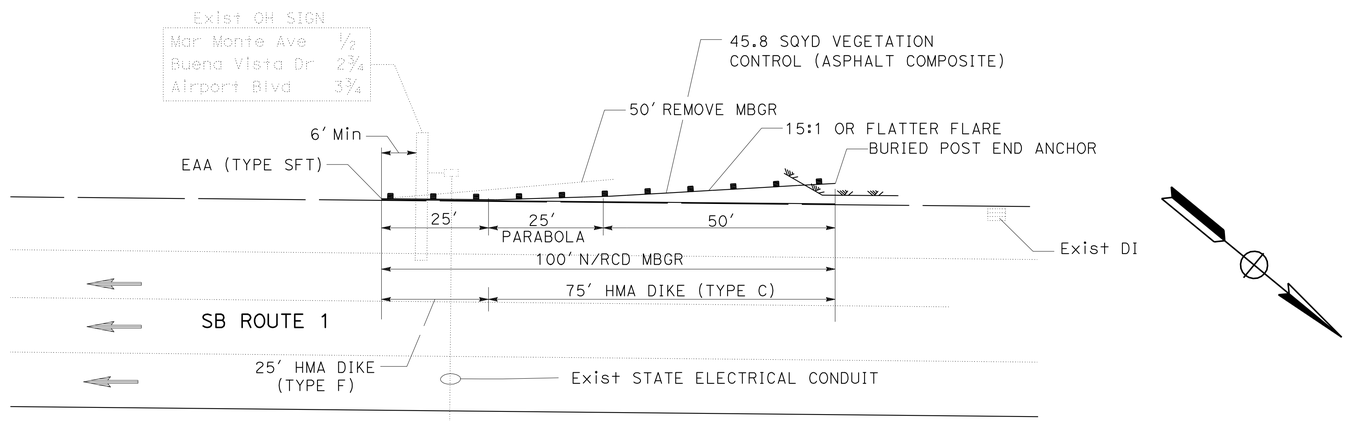

LOCATION 50

PM R7.18
TYPE 16C LAYOUT

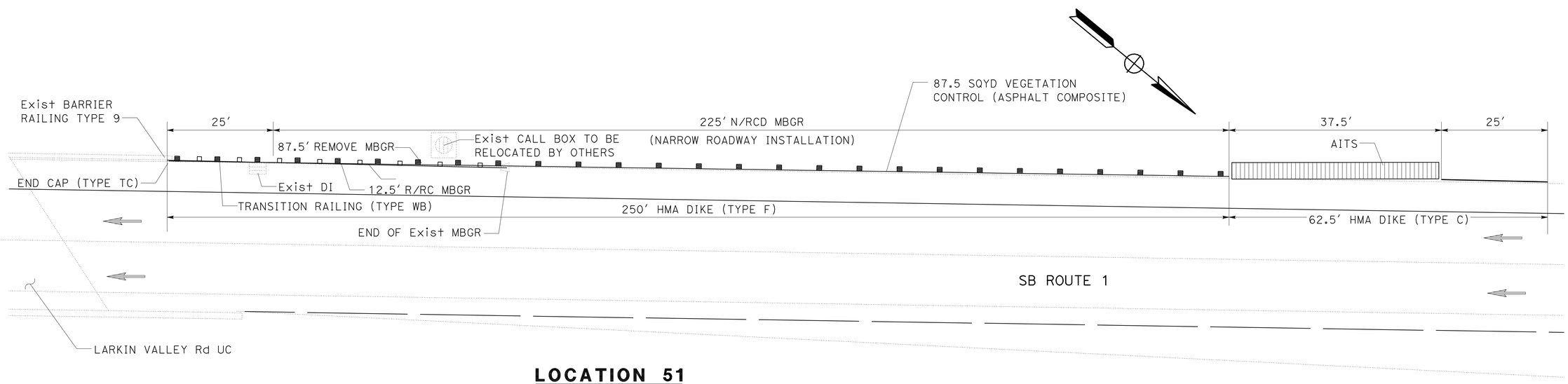

LOCATION 51

PM R7.70
TYPE 12A LAYOUT

EXISTING UTILITY FACILITIES HAVE NOT BEEN PLOTTED ON THESE PLANS

CONSTRUCTION DETAILS

NO SCALE

C-37

REVISED BY | DATE REVISED
PETER CHANDER | HAL KENYON
CALCULATED-DESIGNED BY | CHECKED BY
FUNCTIONAL SUPERVISOR | ROBERTO BANDA
STATE OF CALIFORNIA - DEPARTMENT OF TRANSPORTATION
Caltrans
06-DESIGN

LAST REVISION 05-20-11 | DATE PLOTTED => 12-AUG-2011 | TIME PLOTTED => 11:11

Dist	COUNTY	ROUTE	POST MILES TOTAL PROJECT	SHEET No.	TOTAL SHEETS
05	SCr	1	R0.0/10.2	42	157

REGISTERED CIVIL ENGINEER 5-20-11 DATE

6-20-11
PLANS APPROVAL DATE

REGISTERED PROFESSIONAL ENGINEER
PETER A CHANDER
No. 63988
Exp. 09-30-12
CIVIL
STATE OF CALIFORNIA

THE STATE OF CALIFORNIA OR ITS OFFICERS OR AGENTS SHALL NOT BE RESPONSIBLE FOR THE ACCURACY OR COMPLETENESS OF SCANNED COPIES OF THIS PLAN SHEET.

NOTES:

1. FOR ACCURATE RIGHT OF WAY DATA, CONTACT RIGHT OF WAY ENGINEERING AT THE DISTRICT OFFICE.

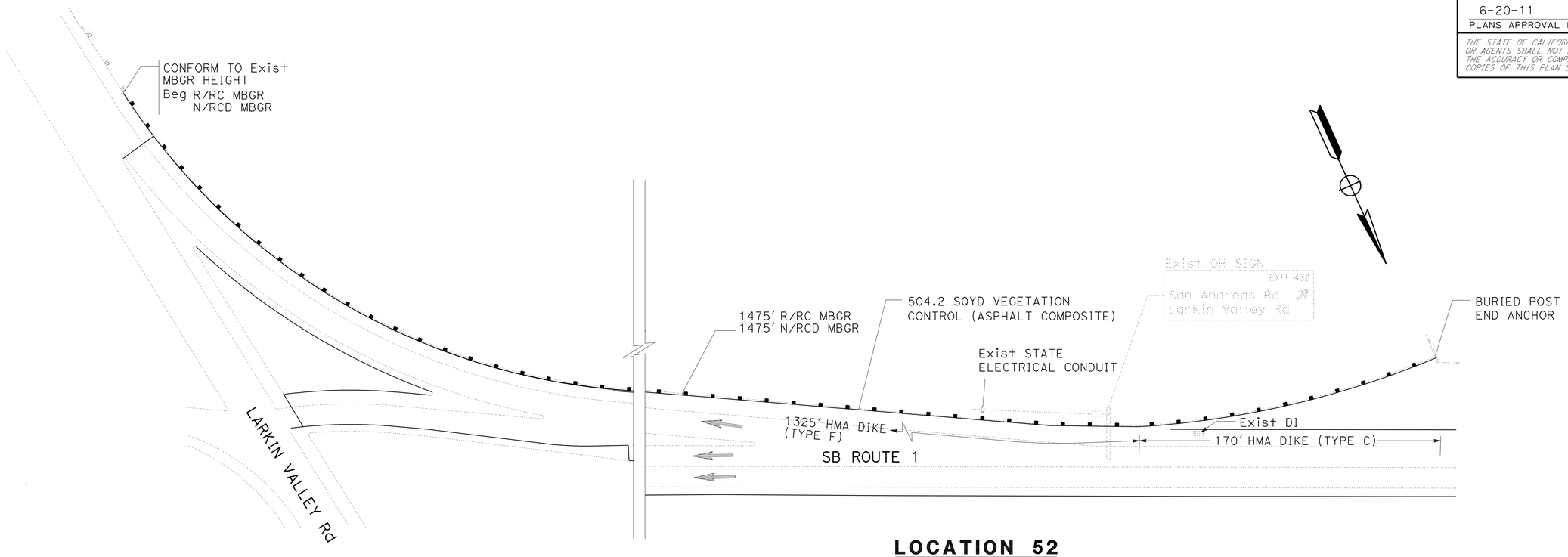

LOCATION 52
PM R7.91

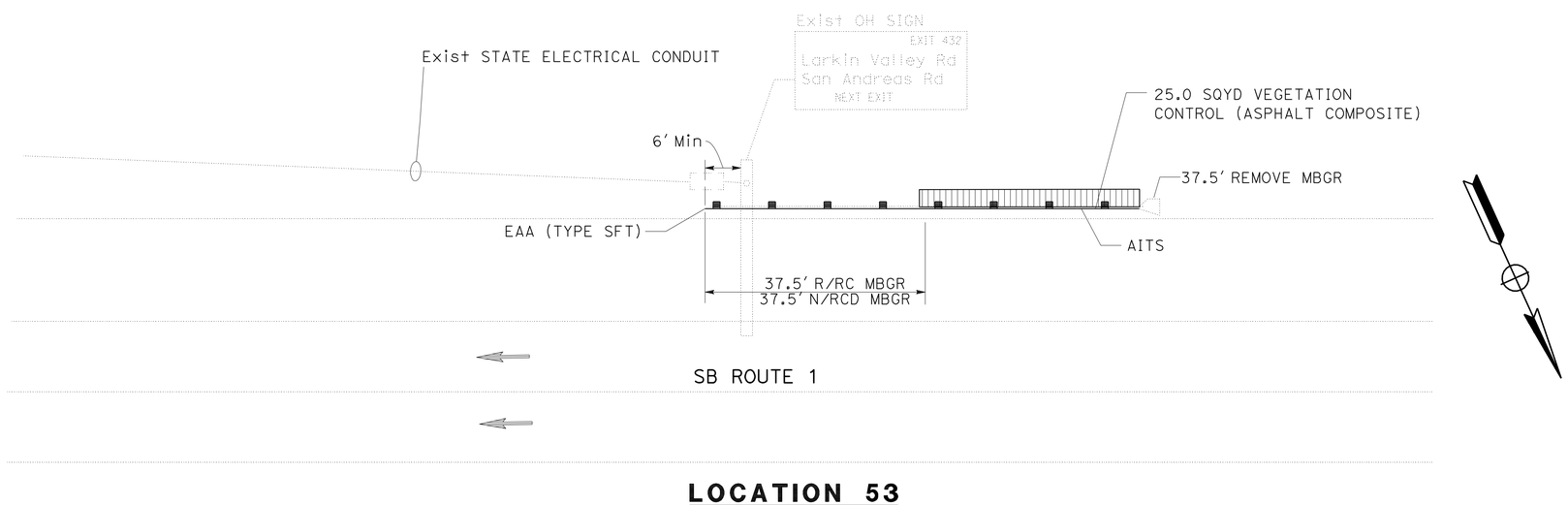

LOCATION 53
PM 8.21
TYPE 16A LAYOUT

EXISTING UTILITY FACILITIES HAVE NOT BEEN PLOTTED ON THESE PLANS

CONSTRUCTION DETAILS

NO SCALE

C-38

STATE OF CALIFORNIA - DEPARTMENT OF TRANSPORTATION
Caltrans
06-DESIGN

FUNCTIONAL SUPERVISOR: ROBERTO BANDA
CALCULATED-DESIGNED BY: PETER CHANDER
CHECKED BY: HAL KENYON
REVISED BY
DATE REVISED

LAST REVISION 05-20-11
DATE PLOTTED => 12-AUG-2011
TIME PLOTTED => 11:11

Dist	COUNTY	ROUTE	POST MILES TOTAL PROJECT	SHEET No.	TOTAL SHEETS
05	SCr	1	R0.0/10.2	43	157

REGISTERED CIVIL ENGINEER 5-20-11 DATE

6-20-11
PLANS APPROVAL DATE

REGISTERED PROFESSIONAL ENGINEER PETER A CHANDER No. 63988 Exp. 09-30-12 CIVIL STATE OF CALIFORNIA

THE STATE OF CALIFORNIA OR ITS OFFICERS OR AGENTS SHALL NOT BE RESPONSIBLE FOR THE ACCURACY OR COMPLETENESS OF SCANNED COPIES OF THIS PLAN SHEET.

NOTES:

1. FOR ACCURATE RIGHT OF WAY DATA, CONTACT RIGHT OF WAY ENGINEERING AT THE DISTRICT OFFICE.

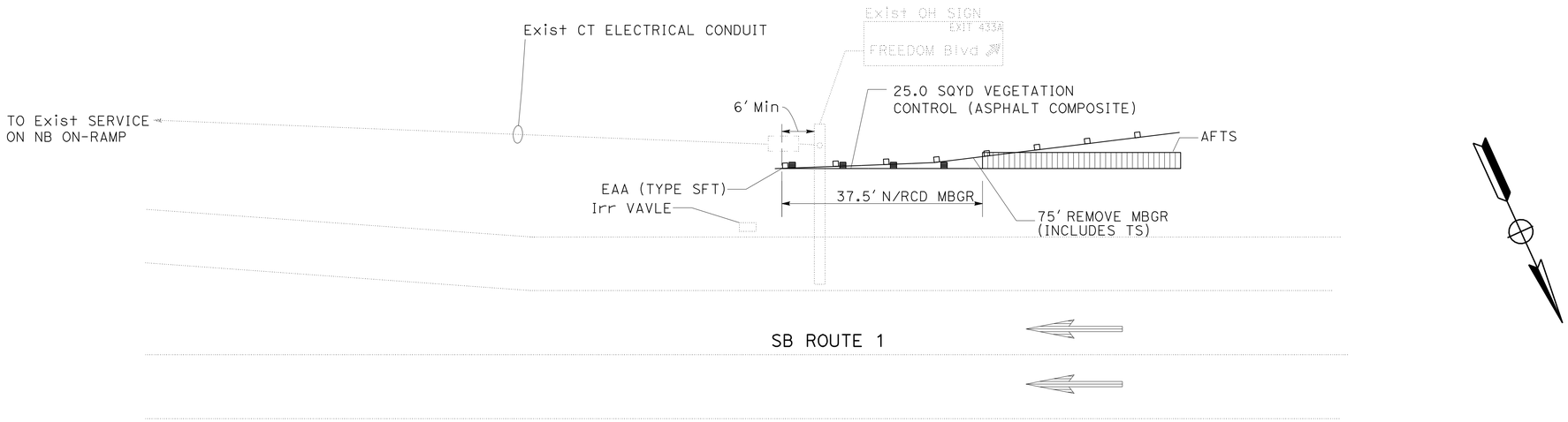

LOCATION 54

PM 8.65
TYPE 16B LAYOUT

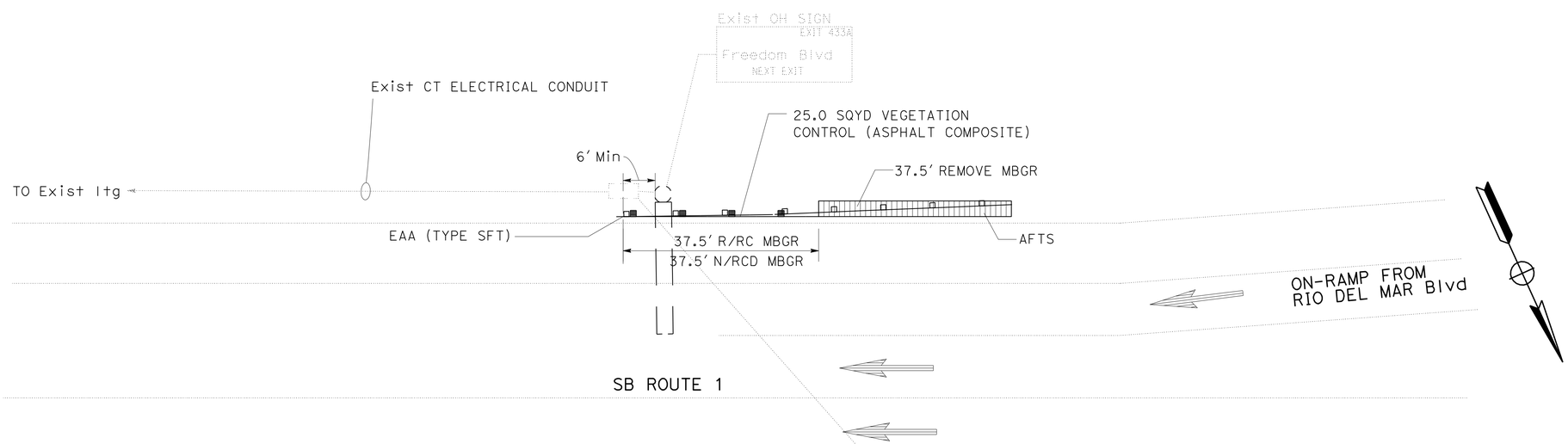

LOCATION 55

PM 9.01
TYPE 16B LAYOUT

EXISTING UTILITY FACILITIES HAVE NOT BEEN PLOTTED ON THESE PLANS

CONSTRUCTION DETAILS

NO SCALE

C-39

STATE OF CALIFORNIA - DEPARTMENT OF TRANSPORTATION
Caltrans 06-DESIGN

FUNCTIONAL SUPERVISOR: ROBERTO BANDA
CALCULATED-DESIGNED BY: PETER CHANDER
CHECKED BY: HAL KENYON
REVISED BY / DATE REVISED

LAST REVISION 05-20-11
DATE PLOTTED => 12-AUG-2011
TIME PLOTTED => 11:11

Dist	COUNTY	ROUTE	POST MILES TOTAL PROJECT	SHEET No.	TOTAL SHEETS
05	SCr	1	R0.0/10.2	44	157

REGISTERED CIVIL ENGINEER 5-20-11 DATE

6-20-11
PLANS APPROVAL DATE

REGISTERED PROFESSIONAL ENGINEER PETER A CHANDER No. 63988 Exp. 09-30-12 CIVIL STATE OF CALIFORNIA

THE STATE OF CALIFORNIA OR ITS OFFICERS OR AGENTS SHALL NOT BE RESPONSIBLE FOR THE ACCURACY OR COMPLETENESS OF SCANNED COPIES OF THIS PLAN SHEET.

NOTES:

1. FOR ACCURATE RIGHT OF WAY DATA, CONTACT RIGHT OF WAY ENGINEERING AT THE DISTRICT OFFICE.

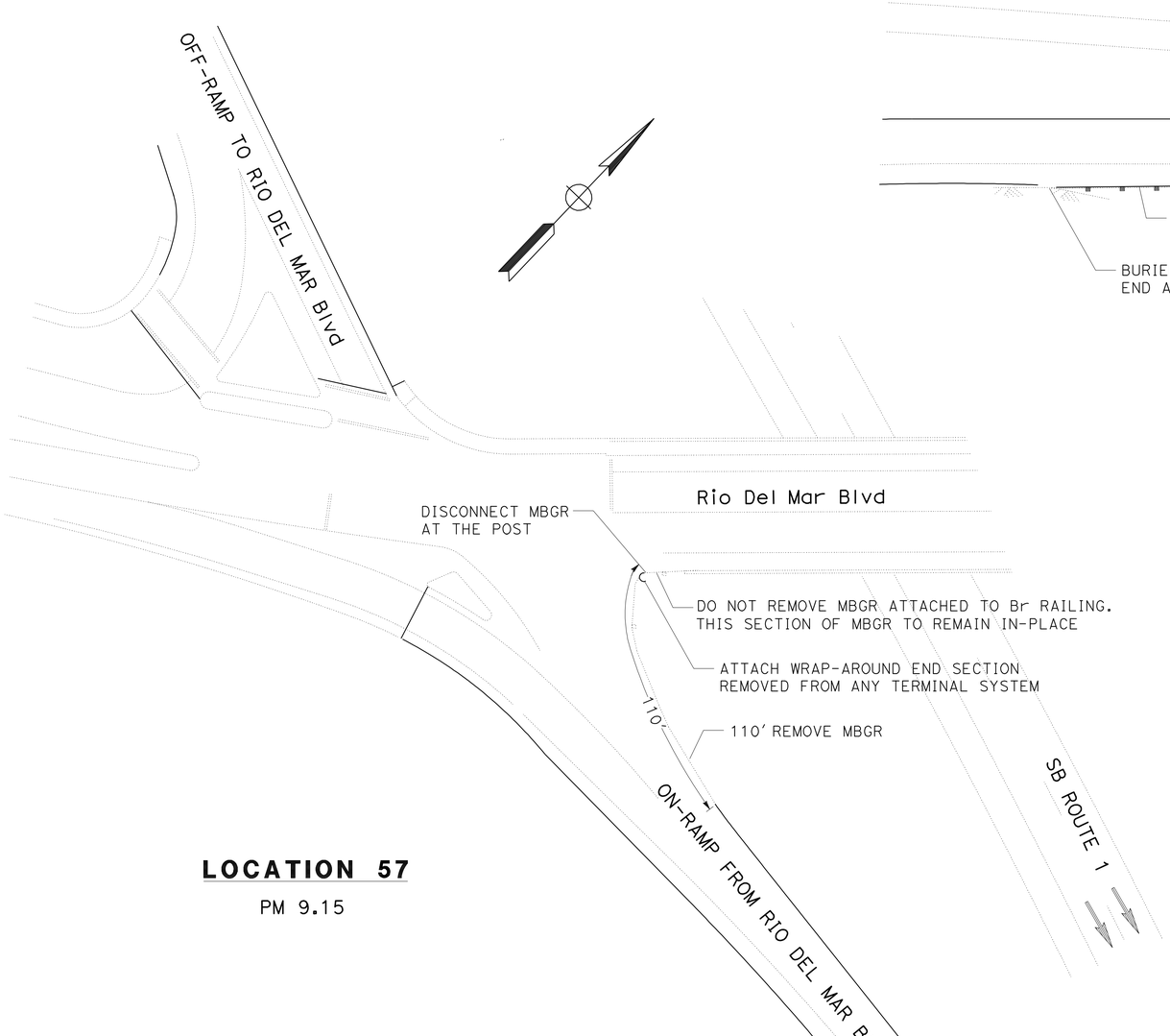

LOCATION 57

PM 9.15

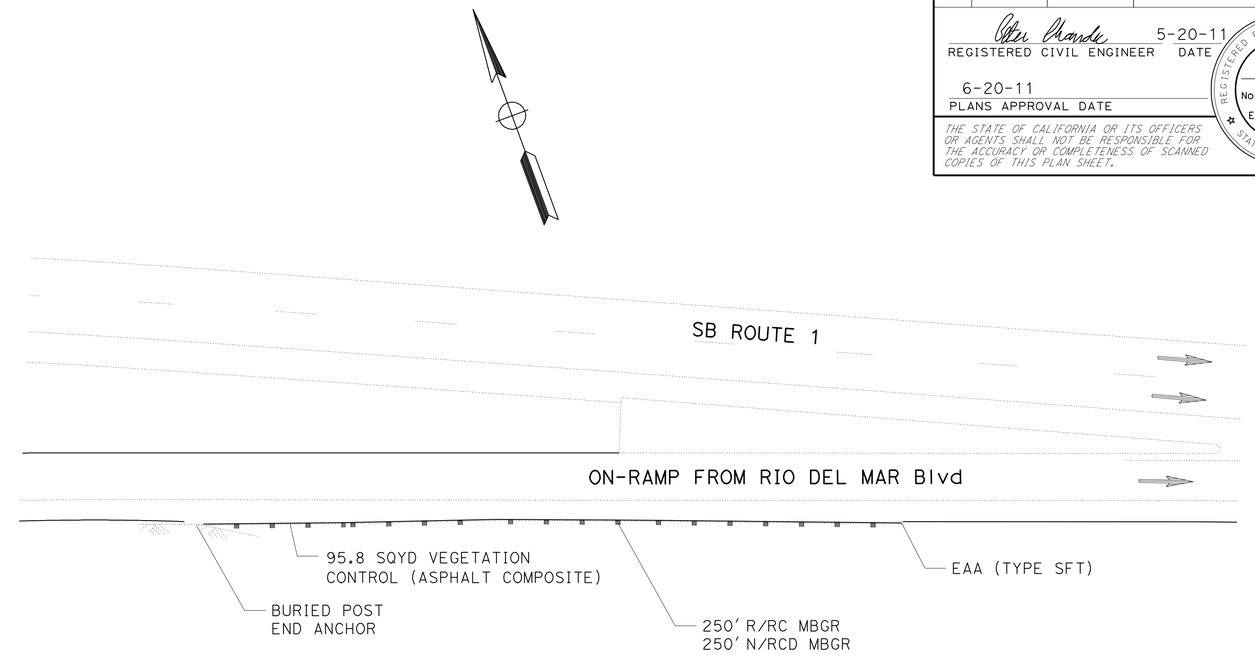

LOCATION 56

PM 9.08
TYPE 11C LAYOUT

EXISTING UTILITY FACILITIES HAVE NOT BEEN PLOTTED ON THESE PLANS

CONSTRUCTION DETAILS

NO SCALE

C-40

STATE OF CALIFORNIA - DEPARTMENT OF TRANSPORTATION
Caltrans 06-DESIGN

FUNCTIONAL SUPERVISOR: ROBERTO BANDA
CALCULATED-DESIGNED BY: PETER CHANDER
CHECKED BY: HAL KENYON
REVISED BY
DATE REVISED

LAST REVISION 05-20-11
DATE PLOTTED => 12-AUG-2011
TIME PLOTTED => 11:12

Dist	COUNTY	ROUTE	POST MILES TOTAL PROJECT	SHEET No.	TOTAL SHEETS
05	SCr	1	R0.0/10.2	45	157

REGISTERED CIVIL ENGINEER 5-20-11 DATE

6-20-11
PLANS APPROVAL DATE

REGISTERED PROFESSIONAL ENGINEER PETER A CHANDER No. 63988 Exp. 09-30-12 CIVIL STATE OF CALIFORNIA

THE STATE OF CALIFORNIA OR ITS OFFICERS OR AGENTS SHALL NOT BE RESPONSIBLE FOR THE ACCURACY OR COMPLETENESS OF SCANNED COPIES OF THIS PLAN SHEET.

NOTES:

1. FOR ACCURATE RIGHT OF WAY DATA, CONTACT RIGHT OF WAY ENGINEERING AT THE DISTRICT OFFICE.

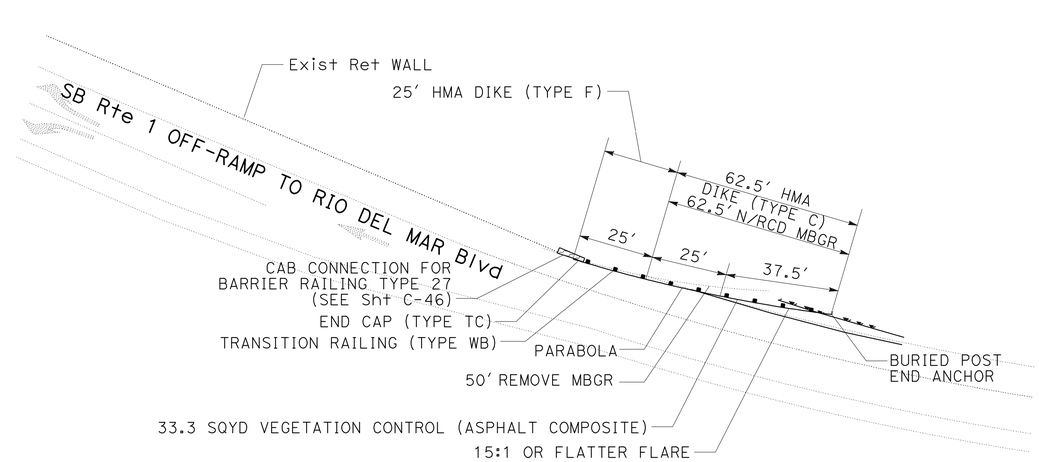

LOCATION 58

PM 9.26
TYPE 12C LAYOUT

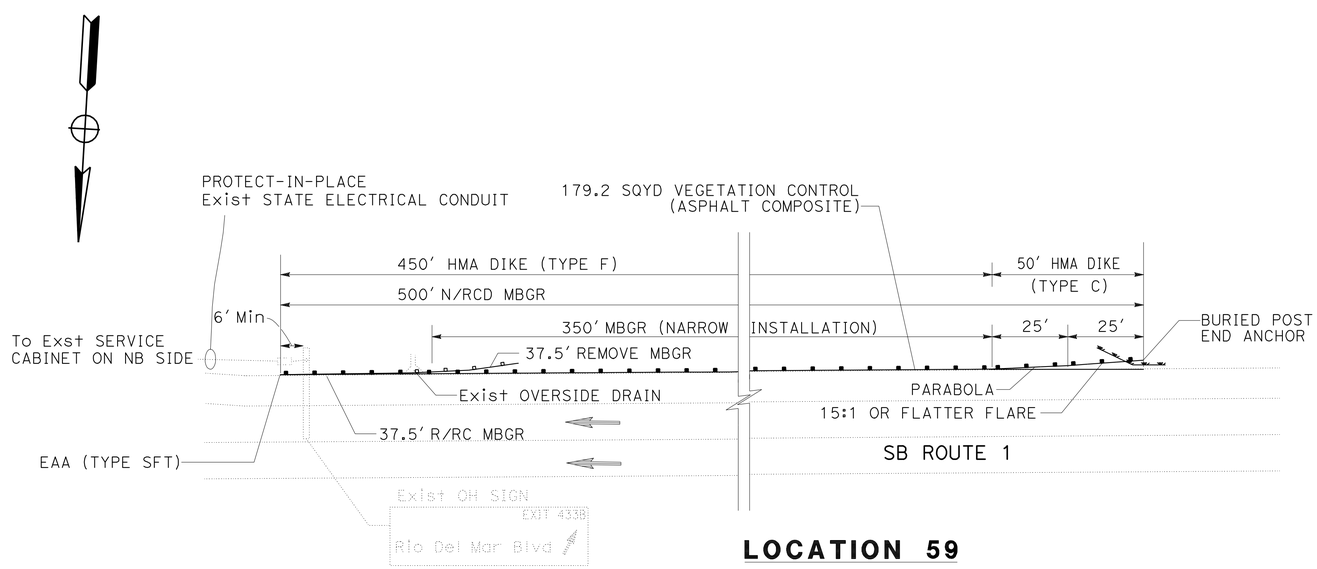

LOCATION 59

PM 9.57
TYPE 16C LAYOUT

EXISTING UTILITY FACILITIES HAVE NOT BEEN PLOTTED ON THESE PLANS

CONSTRUCTION DETAILS

NO SCALE

C-41

STATE OF CALIFORNIA - DEPARTMENT OF TRANSPORTATION
Caltrans® 06-DESIGN

FUNCTIONAL SUPERVISOR: ROBERTO BANDA
CALCULATED-DESIGNED BY: PETER CHANDER
CHECKED BY: HAL KENYON
REVISED BY
DATE REVISED

LAST REVISION 05-20-11
DATE PLOTTED => 12-AUG-2011
TIME PLOTTED => 11:12

Dist	COUNTY	ROUTE	POST MILES TOTAL PROJECT	SHEET No.	TOTAL SHEETS
05	SCr	1	R0.0/10.2	46	157

REGISTERED CIVIL ENGINEER 5-20-11 DATE

6-20-11
PLANS APPROVAL DATE

REGISTERED PROFESSIONAL ENGINEER
PETER A CHANDER
No. 63988
Exp. 09-30-12
CIVIL
STATE OF CALIFORNIA

THE STATE OF CALIFORNIA OR ITS OFFICERS OR AGENTS SHALL NOT BE RESPONSIBLE FOR THE ACCURACY OR COMPLETENESS OF SCANNED COPIES OF THIS PLAN SHEET.

NOTES:

1. WHERE THE DISTANCE BETWEEN BACK OF POST AND HINGE POINT IS LESS THAN 24", VEGETATION CONTROL TO BE CONSTRUCTED FLUSH WITH THE BACK EDGE OF THE POST.
2. WHERE DIKE IS CONSTRUCTED UNDER RAILING, CONSTRUCT VEGETATION CONTROL TO BACK EDGE OF DIKE. WHERE PAVED SHOULDER IS CONSTRUCTED WITHIN 24" IN FRONT OF THE POST, CONSTRUCT VEGETATION CONTROL TO THE EDGE OF PAVED SHOULDER.
3. DIRECTION OF ADJACENT TRAFFIC INDICATED BY ← .
4. SEE NEW STANDARD PLAN A77C6 THROUGH A77C10 FOR OTHER HORIZONTAL DIMENSIONS OF VEGETATION CONTROL AT ROADSIDE FEATURES.

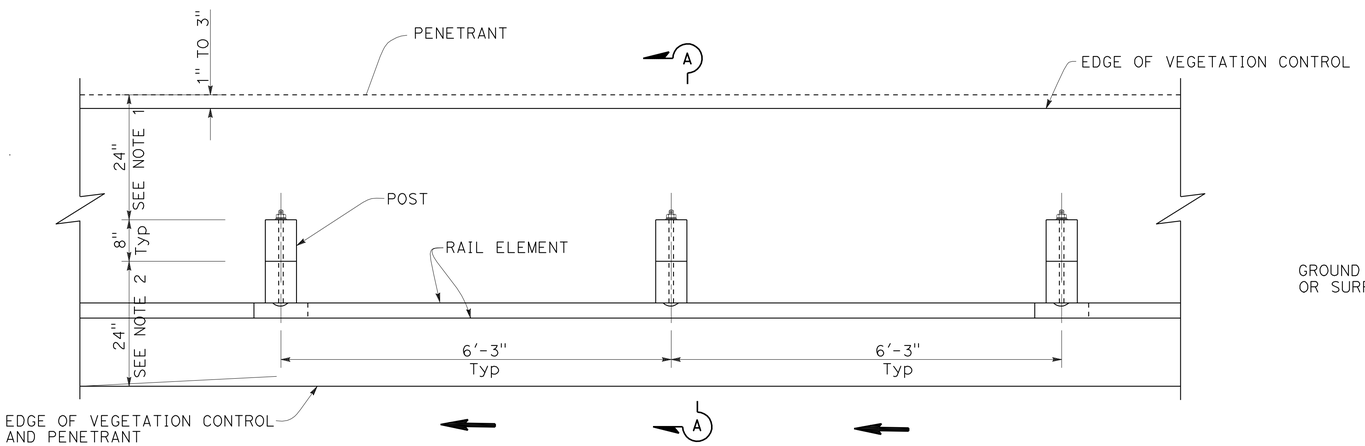

PLAN

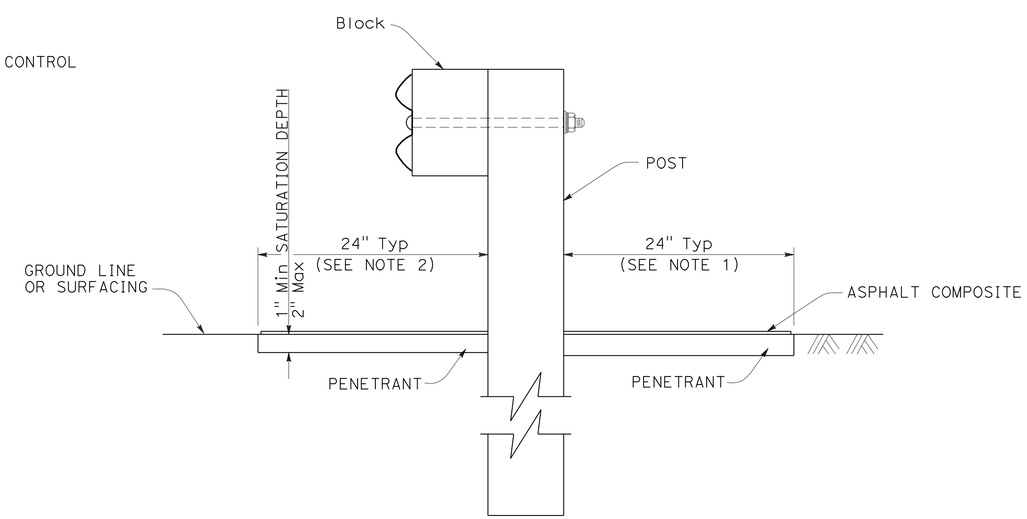

SECTION A-A

CONSTRUCTION DETAILS

(METAL BEAM GUARD RAILING TYPICAL VEGETATION CONTROL STANDARD RAILING SECTION)

NO SCALE

C-42

EXISTING UTILITY FACILITIES HAVE NOT BEEN PLOTTED ON THESE PLANS

STATE OF CALIFORNIA - DEPARTMENT OF TRANSPORTATION
Caltrans
06-DESIGN

FUNCTIONAL SUPERVISOR: ROBERTO BANDA
CALCULATED-DESIGNED BY: PETER CHANDER
CHECKED BY: HAL KENYON
REVISED BY
DATE REVISED

LAST REVISION 05-20-11
DATE PLOTTED => 12-AUG-2011
TIME PLOTTED => 11:12

Dist	COUNTY	ROUTE	POST MILES TOTAL PROJECT	SHEET No.	TOTAL SHEETS
05	SCr	1	R0.0/10.2	47	157

REGISTERED CIVIL ENGINEER 5-20-11 DATE

6-20-11
PLANS APPROVAL DATE

REGISTERED PROFESSIONAL ENGINEER PETER A CHANDER No. 63988 Exp. 09-30-12 CIVIL STATE OF CALIFORNIA

THE STATE OF CALIFORNIA OR ITS OFFICERS OR AGENTS SHALL NOT BE RESPONSIBLE FOR THE ACCURACY OR COMPLETENESS OF SCANNED COPIES OF THIS PLAN SHEET.

NOTES:

1. USE CASE 1 OR CASE 2 WHEN ONE POST OMITTED.
2. USE CASE 3 WHEN TWO POSTS ARE OMITTED.
3. FOR OTHER DETAILS, SEE STANDARD PLANS A77A2, A77B1, A77C2 AND 4.
4. LOCATIONS OF NESTING SHALL BE TO AVOID UTILITY / DRAINAGE FACILITY OR AS DIRECTED BY THE ENGINEER.
5. OFFSET THE ADDITIONAL METAL BEAM GUARD RAILING SPLICES 6'-3" FROM THE BASE METAL BEAM GUARD RAILING SPLICES.

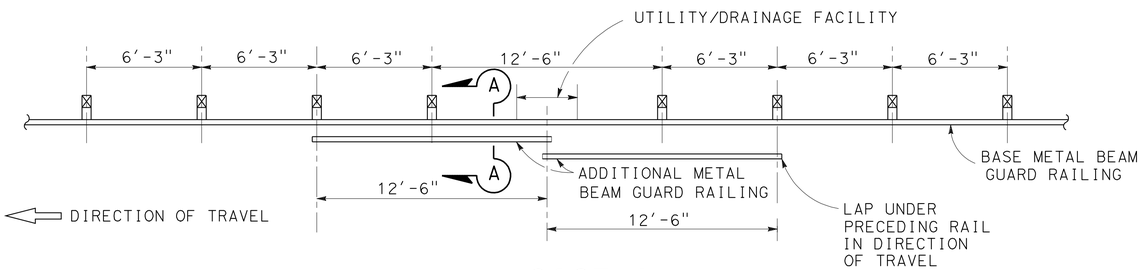

CASE 1
ONE POST OMITTED (SPLICE IN CENTER)

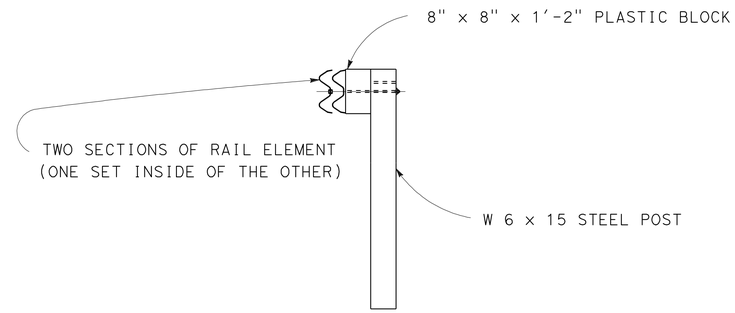

SECTION A-A
SEE NOTE 3

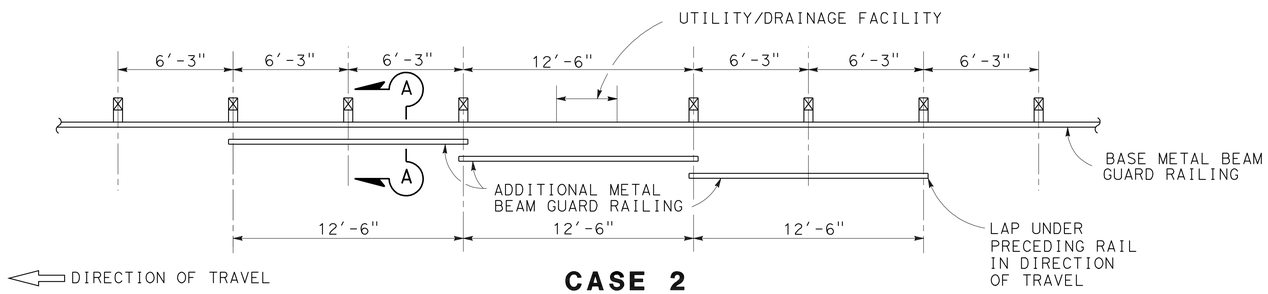

CASE 2
ONE POST OMITTED (SPLICE AT POSTS)

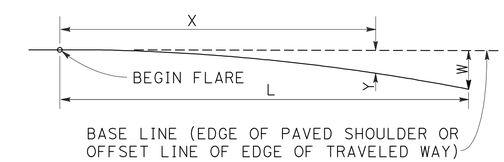

$$Y = \frac{WX^2}{L^2}$$

Y = OFFSET FROM BASE LINE
W = MAXIMUM OFFSET
X = DISTANCE ALONG BASE LINE
L = LENGTH OF FLARE

PARABOLIC FLARE OFFSETS

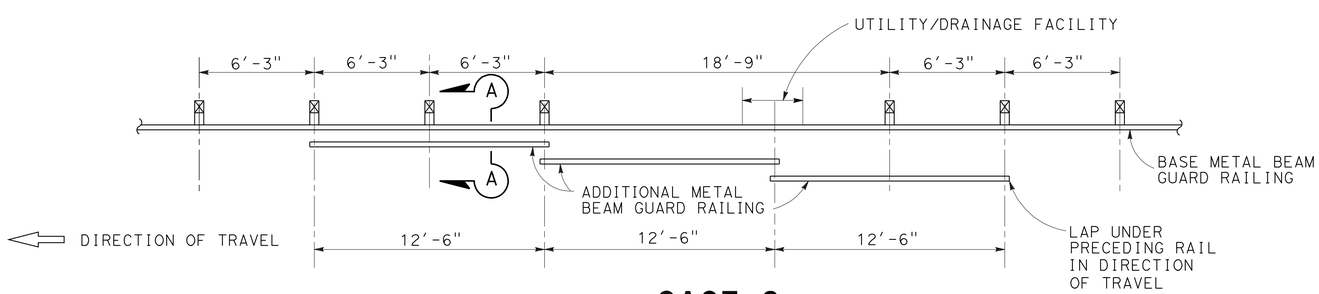

CASE 3
TWO POSTS OMITTED

LONG SPAN NESTED GUARD RAILING

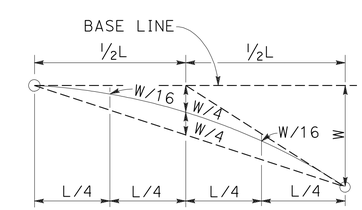

TYPICAL PARABOLIC LAYOUT

EXISTING UTILITY FACILITIES HAVE NOT BEEN PLOTTED ON THESE PLANS

CONSTRUCTION DETAILS
NO SCALE

C-43

STATE OF CALIFORNIA - DEPARTMENT OF TRANSPORTATION
Caltrans
06-DESIGN
FUNCTIONAL SUPERVISOR: ROBERTO BANDA
CALCULATED-DESIGNED BY: PETER CHANDER
CHECKED BY: HAL KENYON
REVISED BY
DATE REVISED

LAST REVISION 05-20-11
DATE PLOTTED => 12-AUG-2011
TIME PLOTTED => 11:12

Dist	COUNTY	ROUTE	POST MILES TOTAL PROJECT	SHEET No.	TOTAL SHEETS
05	SCr	1	R0.0/10.2	48	157

REGISTERED CIVIL ENGINEER 5-20-11 DATE

6-20-11
PLANS APPROVAL DATE

REGISTERED PROFESSIONAL ENGINEER PETER A CHANDER No. 63988 Exp 09-30-12 CIVIL STATE OF CALIFORNIA

THE STATE OF CALIFORNIA OR ITS OFFICERS OR AGENTS SHALL NOT BE RESPONSIBLE FOR THE ACCURACY OR COMPLETENESS OF SCANNED COPIES OF THIS PLAN SHEET.

NOTES:

1. LINE POST, BLOCKS AND HARDWARE TO BE USED ARE SHOWN ON Std PLANS
2. POST SPACING TO BE 6'-3" CENTER TO CENTER, EXCEPT AS OTHERWISE NOTED.
3. EXCEPT AS NOTED, LINE POSTS ARE 6" x 8" x 6'-0" WOOD WITH 6" x 8" x 1'-10" WOOD BLOCKS.
4. DIRECTION oF ADJACENT TRAFFIC INDICATED BY ➡.
5. FOR TRANSITION RAILING (TYPE STB AND DTB) DETAILS, SEE Std Plans.
6. THE 15:1 OR FLATTER IS MEASURED OFF OF THE EDGE OF TRAVELED WAY

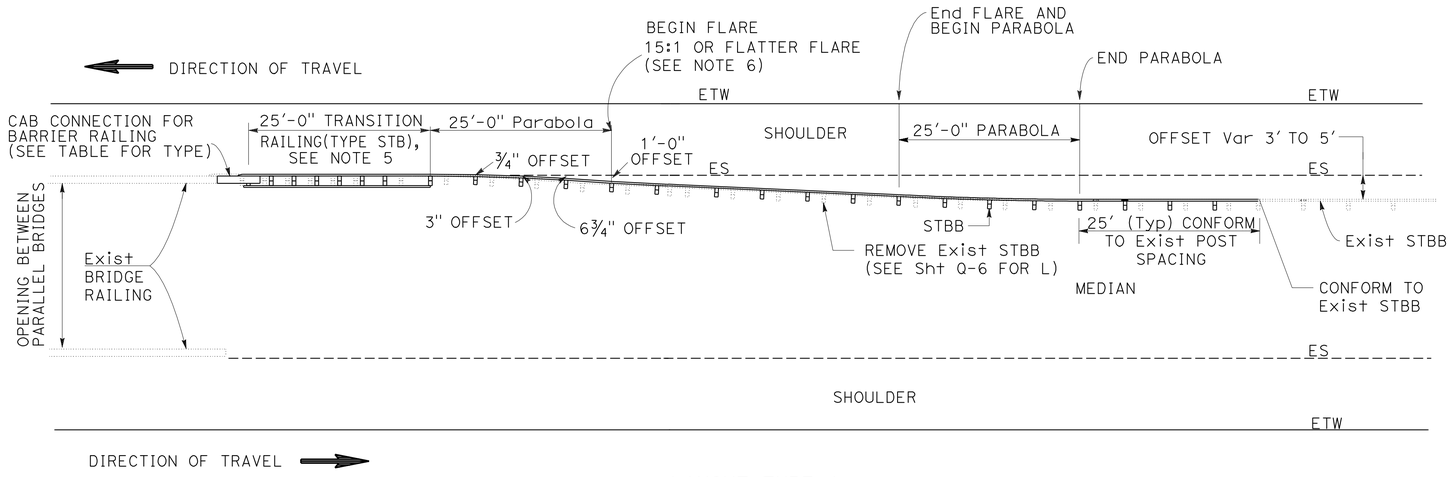

LAYOUT TYPE A

LOCATIONS

Br DESCRIPTION	PM	DIRECTION	Loc	LAYOUT	FOR ANCHOR BLOCK DETAIL
PAJARO RIVER BRIDGE	R0.0	SB	T7	TYPE A	SEE Sht C-46
BEACH Rd UC	R1.0	NB	T1	TYPE A	SEE Sht C-45
		SB	T8	TYPE A	SEE Sht C-45
WEST WATSONVILLE OH	R1.1	NB	T2	TYPE A	SEE Sht C-46
		SB	T9	TYPE A	SEE Sht C-46
WATSONVILLE SLOUGH Br	R1.4	NB	T3	TYPE A	SEE Sht C-46
		SB	T10	TYPE A	SEE Sht C-46
STRUVE SLOUGH Br	R1.6	NB	T4	TYPE A	SEE Sht C-45
		SB	T11	TYPE B	SEE Sht C-45
BUENA VISTA DRIVE U/C	R4.1	NB	T5	TYPE B	CONNECT TO Exist ANCHOR BLOCK
		SB	T12	TYPE B	
LARKIN VALLEY Rd U/C	R7.7	NB	T6	TYPE B	
		SB	T13	TYPE C	

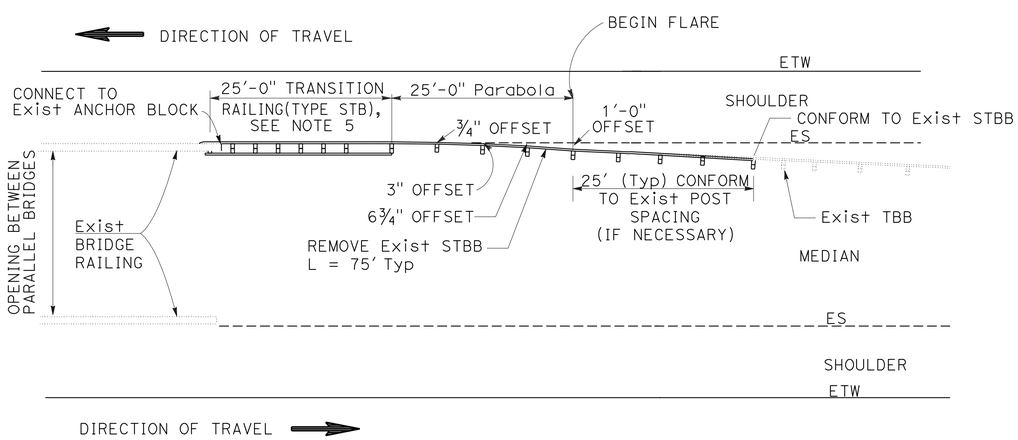

LAYOUT TYPE B

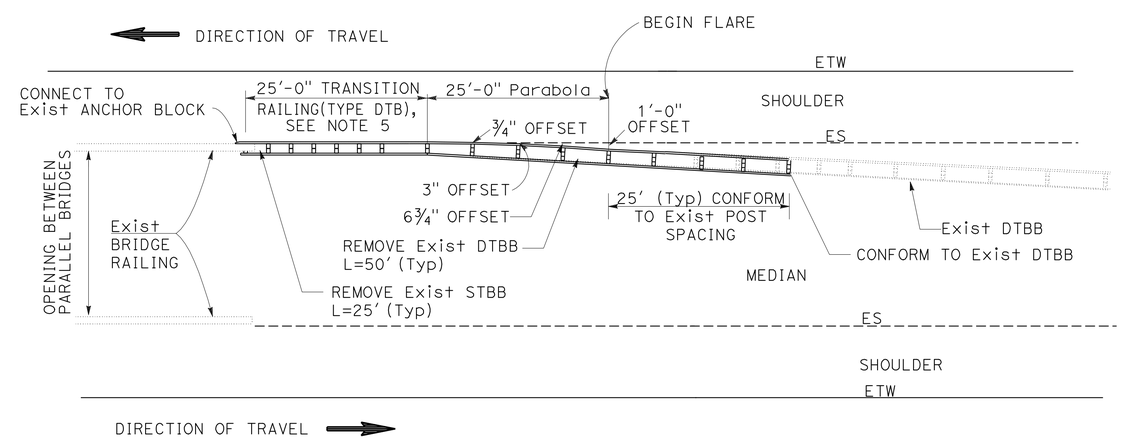

LAYOUT TYPE C

RECONSTRUCT THRIE BEAM BARRIER
CONNECTION TO BRIDGE RAILING DETAIL

EXISTING UTILITY FACILITIES HAVE NOT BEEN PLOTTED ON THESE PLANS

CONSTRUCTION DETAILS

NO SCALE

C-44

REVISED BY | DATE REVISED
PETER CHANDER | HAL KENYON
CALCULATED-DESIGNED BY | CHECKED BY
FUNCTIONAL SUPERVISOR
ROBERTO BANDA

STATE OF CALIFORNIA - DEPARTMENT OF TRANSPORTATION
Caltrans 06-DESIGN

LAST REVISION 05-20-11 | DATE PLOTTED => 12-AUG-2011 | TIME PLOTTED => 11:12

Dist	COUNTY	ROUTE	POST MILES TOTAL PROJECT	SHEET No.	TOTAL SHEETS
05	SCr	1	R0.0/10.2	49	157

REGISTERED CIVIL ENGINEER 5-20-11 DATE

6-20-11
PLANS APPROVAL DATE

REGISTERED PROFESSIONAL ENGINEER PETER A CHANDER No. 63988 Exp. 09-30-12 CIVIL STATE OF CALIFORNIA

THE STATE OF CALIFORNIA OR ITS OFFICERS OR AGENTS SHALL NOT BE RESPONSIBLE FOR THE ACCURACY OR COMPLETENESS OF SCANNED COPIES OF THIS PLAN SHEET.

NOTES:

1. FOR DETAILS NOT SHOWN, SEE STANDARD PLANS.
2. DEPENDENT DIMENSIONS WILL BE VERIFIED IN THE FIELD BEFORE FABRICATING ANY END CONNECTION TO CONFORM WITH EXISTING PAVED CONDITIONS.
3. ALL PLATES AND BOLTS ARE GALVANIZED.
4. FOR TRANSITION RAILING (TYPE WB), SEE Std PLAN A77J4

LEGEND:

-·-·-·- INDICATES EXISTING STRUCTURE.

——— INDICATES NEW CONSTRUCTION.

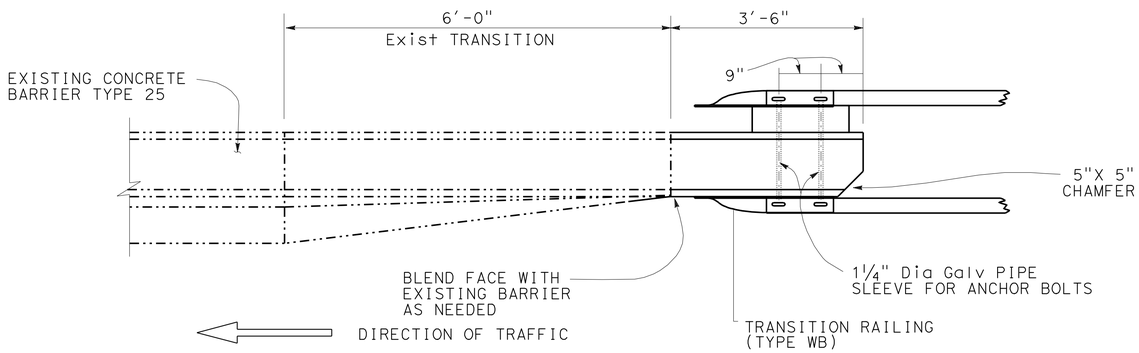

PLAN
NO SCALE

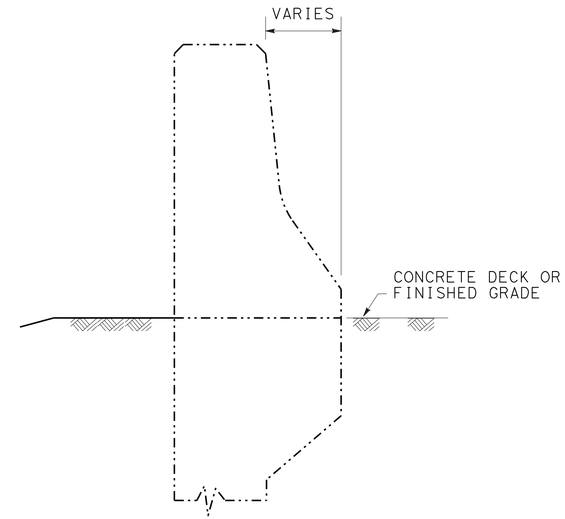

SECTION B-B
NO SCALE

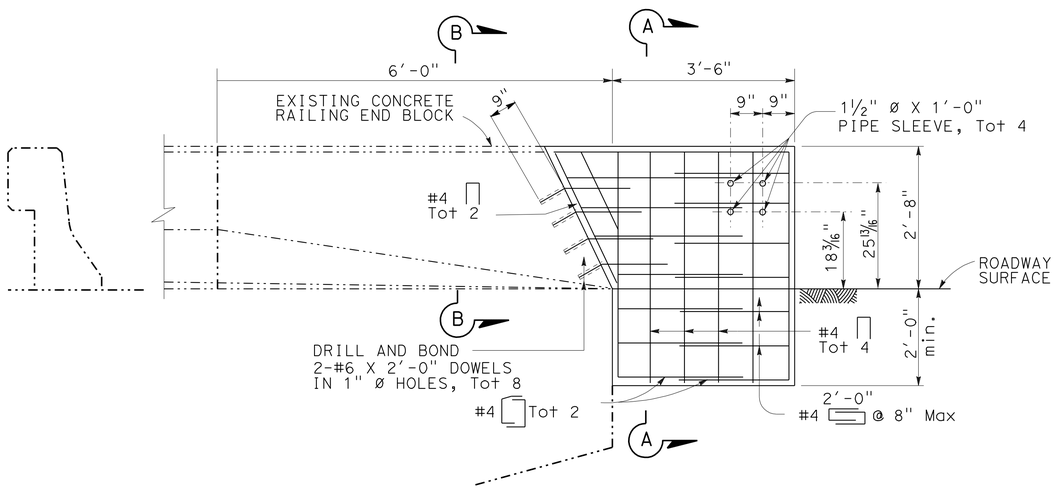

LOCATIONS 4, 7, 31, 34

ELEVATION
NO SCALE

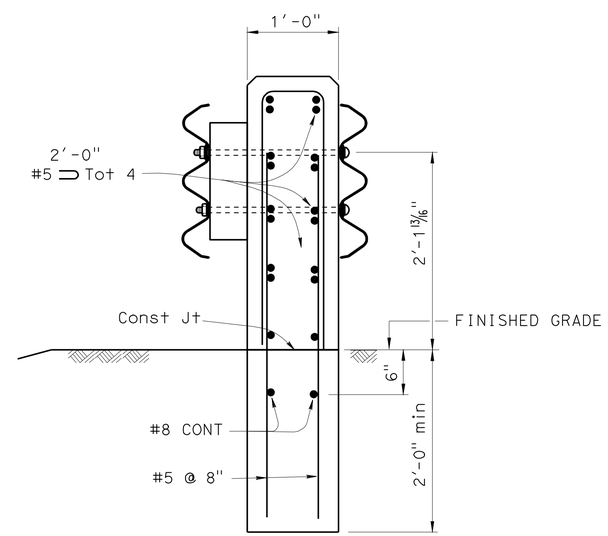

SECTION A-A
NO SCALE

CONCRETE ANCHOR BLOCK CONNECTION FOR BARRIER RAILING TYPE 25

EXISTING UTILITY FACILITIES HAVE NOT BEEN PLOTTED ON THESE PLANS

CONSTRUCTION DETAILS

NO SCALE

C-45

STATE OF CALIFORNIA - DEPARTMENT OF TRANSPORTATION
Caltrans 06-DESIGN
FUNCTIONAL SUPERVISOR ROBERTO BANDA
CALCULATED-DESIGNED BY PETER CHANDER
CHECKED BY HAL KENYON
REVISED BY
DATE REVISED

LAST REVISION 05-20-11
DATE PLOTTED => 12-AUG-2011
TIME PLOTTED => 11:12

Dist	COUNTY	ROUTE	POST MILES TOTAL PROJECT	SHEET No.	TOTAL SHEETS
05	SCr	1	R0.0/10.2	50	157

REGISTERED CIVIL ENGINEER 5-20-11 DATE

6-20-11
PLANS APPROVAL DATE

REGISTERED PROFESSIONAL ENGINEER PETER A CHANDER No. 63988 Exp. 09-30-12 CIVIL STATE OF CALIFORNIA

THE STATE OF CALIFORNIA OR ITS OFFICERS OR AGENTS SHALL NOT BE RESPONSIBLE FOR THE ACCURACY OR COMPLETENESS OF SCANNED COPIES OF THIS PLAN SHEET.

NOTES:

1. FOR DETAILS NOT SHOWN, SEE STANDARD PLANS.
2. DEPENDENT DIMENSIONS WILL BE VERIFIED IN THE FIELD BEFORE FABRICATING ANY END CONNECTION TO CONFORM WITH EXISTING PAVED CONDITIONS
3. FOR TRANSITION RAILING (TYPE WB) CONNECTION, SEE STANDARD PLANS A77J4.
4. ALL PLATES AND BOLTS ARE GALVANIZED.
5. CUT AND REMOVE THAT PORTION OF TYPE 27 AS REQUIRED EXISTING REINFORCEMENT TO REMAIN.
6. WINGALL REINFORCEMENT TO REMAIN.
7. BRIDGE NAME AND NUMBER SHALL BE PAINTED ON NEW BRIDGE RAIL IF REMOVED.

LEGEND:

- INDICATES EXISTING STRUCTURE.
- INDICATES NEW CONSTRUCTION.
- CONCRETE REMOVAL.

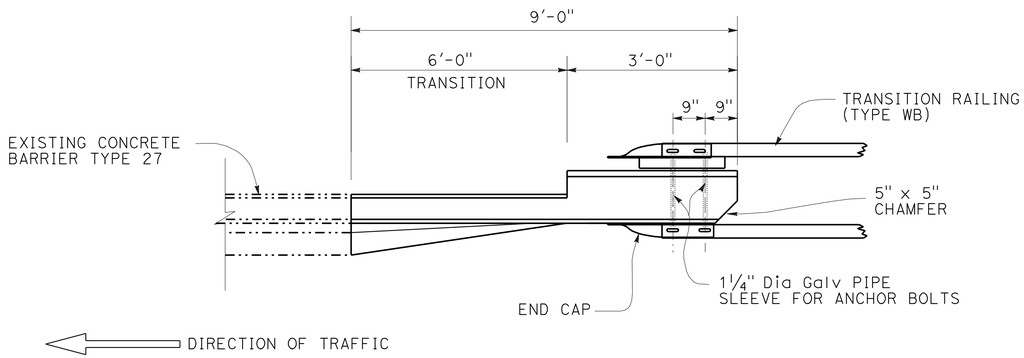

PLAN
NO SCALE

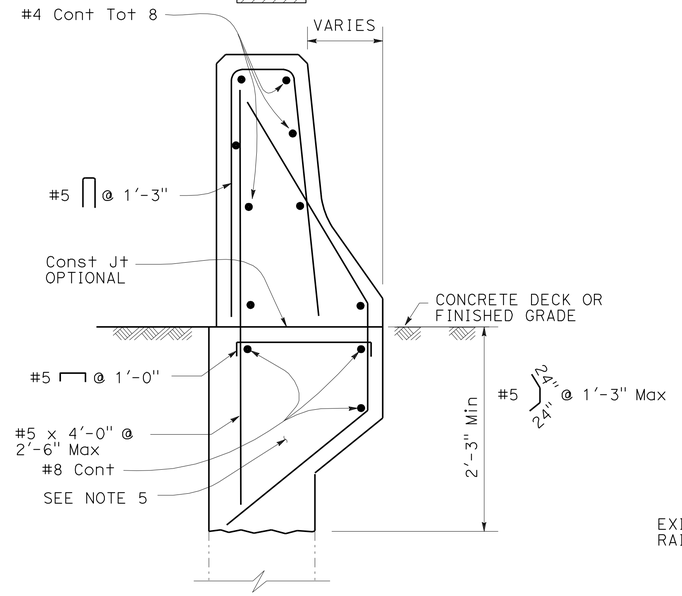

SECTION B-B
NO SCALE

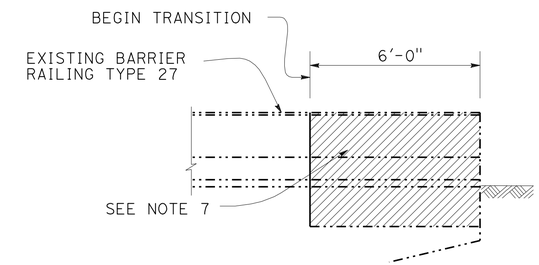

CONCRETE REMOVAL
NO SCALE

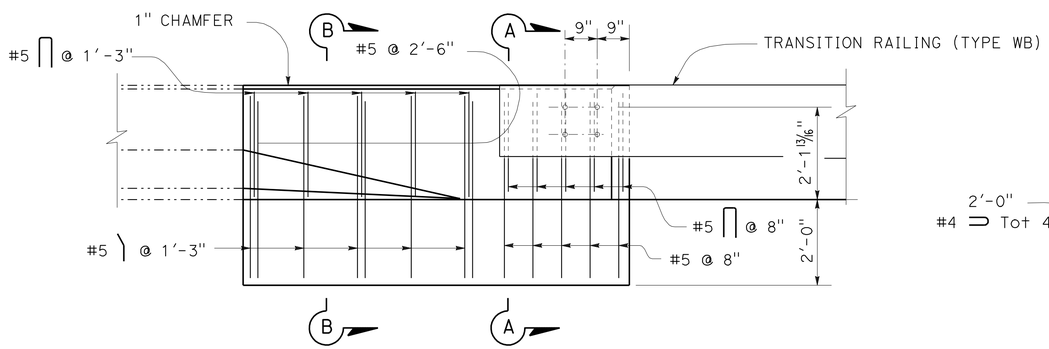

ELEVATION
NO SCALE
LOCATIONS 3, 5, 6, 27, 28, 32, 33, 58

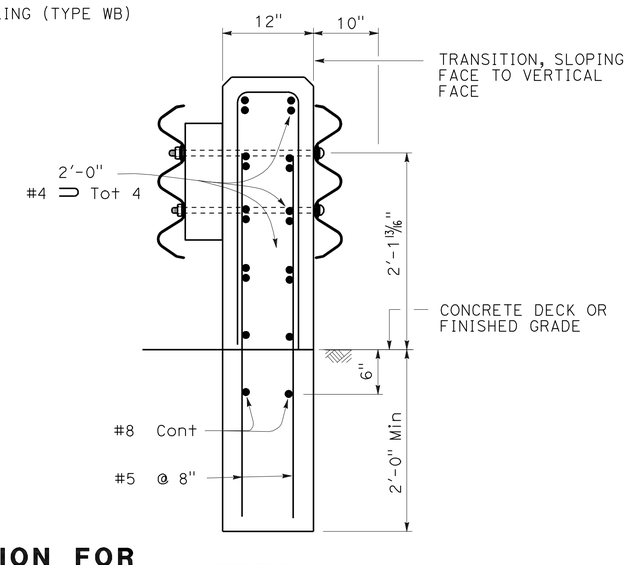

SECTION A-A
NO SCALE

CONCRETE ANCHOR BLOCK CONNECTION FOR BARRIER RAILING TYPE 27

CONSTRUCTION DETAILS
NO SCALE

EXISTING UTILITY FACILITIES HAVE NOT BEEN PLOTTED ON THESE PLANS

C-46

STATE OF CALIFORNIA - DEPARTMENT OF TRANSPORTATION
Caltrans® 06-DESIGN
FUNCTIONAL SUPERVISOR ROBERTO BANDA
CALCULATED-DESIGNED BY PETER CHANDER
CHECKED BY HAL KENYON
REVISED BY
DATE REVISED

LAST REVISION 05-20-11
DATE PLOTTED => 12-AUG-2011
TIME PLOTTED => 11:12

Dist	COUNTY	ROUTE	POST MILES TOTAL PROJECT	SHEET No.	TOTAL SHEETS
05	SCr	1	R0.0/10.2	51	157

REGISTERED CIVIL ENGINEER 5-20-11 DATE

6-20-11
PLANS APPROVAL DATE

REGISTERED PROFESSIONAL ENGINEER PETER A CHANDER No. 63988 Exp. 09-30-12 CIVIL STATE OF CALIFORNIA

THE STATE OF CALIFORNIA OR ITS OFFICERS OR AGENTS SHALL NOT BE RESPONSIBLE FOR THE ACCURACY OR COMPLETENESS OF SCANNED COPIES OF THIS PLAN SHEET.

NOTES
1. FOR DETAILS OF STEEL POST INSTALLATIONS, SEE Std PLAN A77A2

PILE DATA

Loc No.	Co	PM	DESCRIPTION	(N) MBGR (CIDH)	(N) No. PILES	(N) LENGTH OF EACH PILE	24" CIDH CONCRETE PILING (GUARD RAILING)
				LF	EA	LF	LF
35	SCr	R2.68	Rte 1/152 Sep	18.75'	4	10	40
SUBTOTAL							40*

(N) NOT A SEPARATE PAY ITEM, FOR INFORMATION ONLY
* Qty INCLUDED IN MBGR Misc Qty TABLE, SEE Sht Q-5

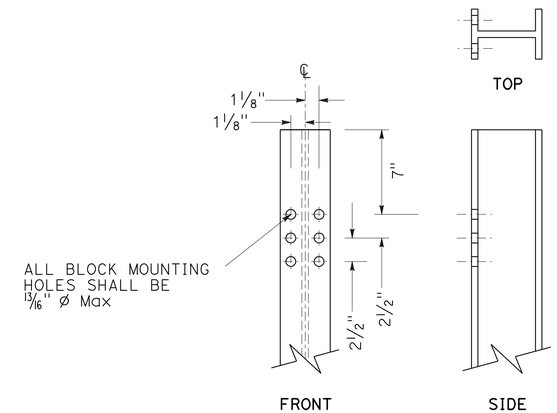

W6 x 9 STEEL POST

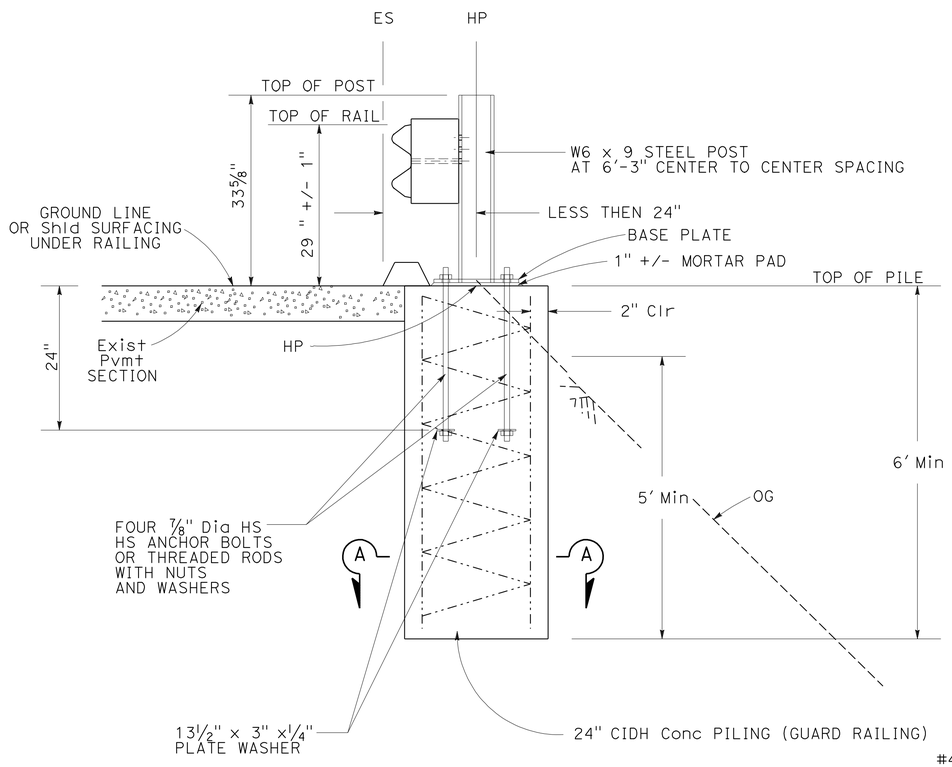

TYPICAL STEEL LINE POST INSTALLATION

NARROW EMBANKMENT

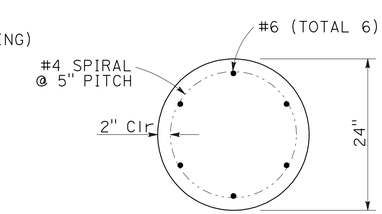

SECTION A-A

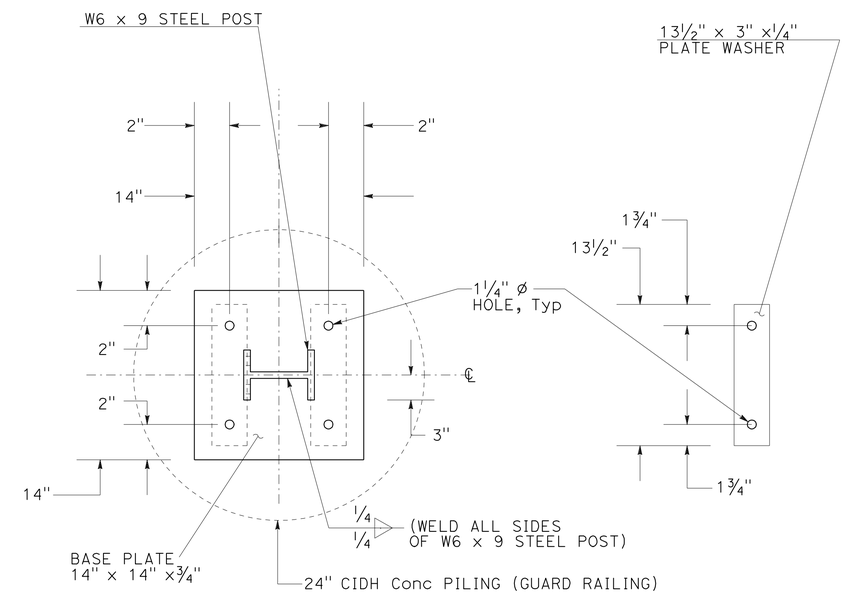

BASE PLATE AND PLATE WASHER

EXISTING UTILITY FACILITIES HAVE NOT BEEN PLOTTED ON THESE PLANS

CONSTRUCTION DETAILS
(MBGR (CIDH))

NO SCALE

C-47

STATE OF CALIFORNIA - DEPARTMENT OF TRANSPORTATION
Caltrans 06-DESIGN
FUNCTIONAL SUPERVISOR: ROBERTO BANDA
CALCULATED-DESIGNED BY: PETER CHANDER
CHECKED BY: HAL KENYON
REVISED BY
DATE REVISED

LAST REVISION 05-20-11
DATE PLOTTED => 12-AUG-2011
TIME PLOTTED => 11:12

Dist	COUNTY	ROUTE	POST MILES TOTAL PROJECT	SHEET No.	TOTAL SHEETS
05	SCr	1	R0.0/10.2	52	157

REGISTERED CIVIL ENGINEER 5-20-11 DATE

6-20-11
PLANS APPROVAL DATE

REGISTERED PROFESSIONAL ENGINEER PETER A CHANDER No. 63988 Exp. 09-30-12 CIVIL STATE OF CALIFORNIA

THE STATE OF CALIFORNIA OR ITS OFFICERS OR AGENTS SHALL NOT BE RESPONSIBLE FOR THE ACCURACY OR COMPLETENESS OF SCANNED COPIES OF THIS PLAN SHEET.

NOTES:

1. APPROXIMATE EXCAVATION PER PRECAST CONCRETE BEAM IS 1 CUYD.
2. SEE HARDWARE CHART FOR DIMENSIONS.
3. SEE SUMMARY OF QUANTITIES SHEET FOR QUANTITIES.

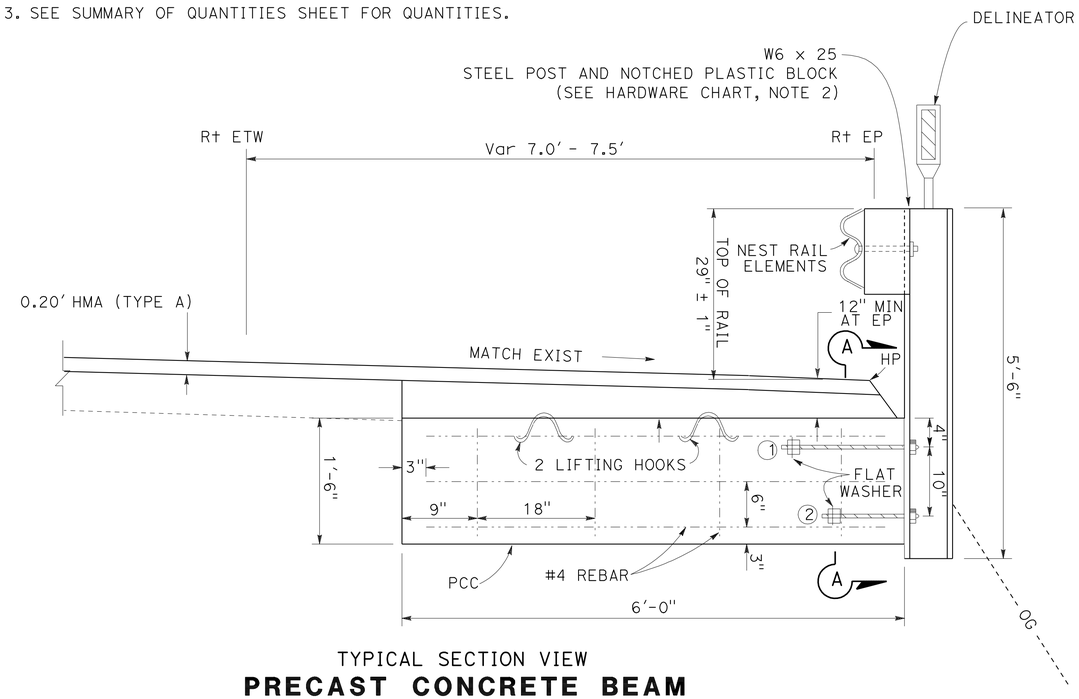

TYPICAL SECTION VIEW

PRECAST CONCRETE BEAM

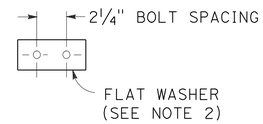

FLAT WASHER

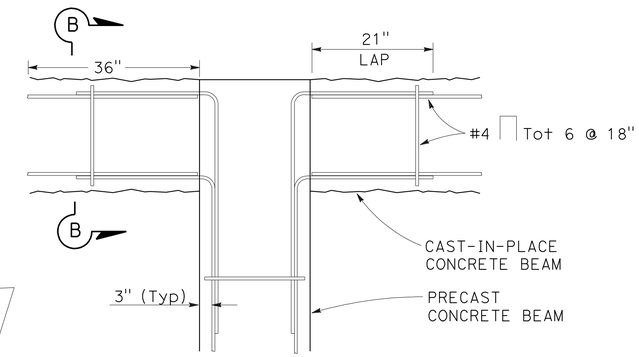

CONCRETE BEAM DETAIL

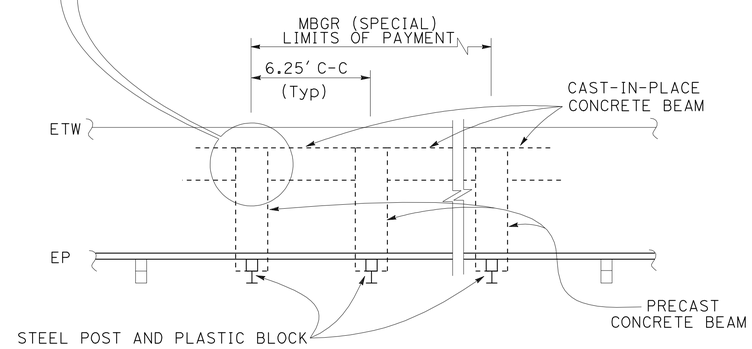

TYPICAL PLAN VIEW

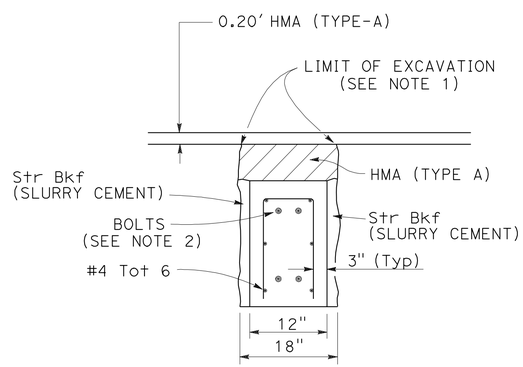

SECTION A-A

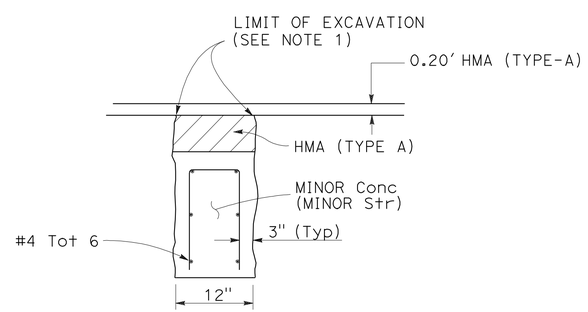

SECTION B-B

HARDWARE CHART FOR PRECAST CONCRETE BEAM

CASE	STEEL POST	PLASTIC BLOCK	①	②	BOLT SPACING
PRECAST BEAM	W6 x 25	6" x 8" x 1′-2"	2 EA ¾" DIA x 1′-6" HS BOLTS (THREADED BOTH ENDS) WITH 3 EA HEX NUTS AND 3" x 7" x ¼" FLAT WASHER	2 EA ⅝" DIA x 1′ HS BOLTS (THREADED BOTH ENDS) WITH 3 EA HEX NUTS AND 2" X 7" X ¼" FLAT WASHER	2¼"

MBGR (SPECIAL)

LOCATION 26

EXISTING UTILITY FACILITIES HAVE NOT BEEN PLOTTED ON THESE PLANS

CONSTRUCTION DETAILS

NO SCALE

C-48

STATE OF CALIFORNIA - DEPARTMENT OF TRANSPORTATION
Caltrans® 06-DESIGN

FUNCTIONAL SUPERVISOR: ROBERTO BANDA
CALCULATED-DESIGNED BY: PETER CHANDER
CHECKED BY: HAL KENYON
REVISED BY / DATE REVISED

LAST REVISION 05-20-11
DATE PLOTTED => 12-AUG-2011
TIME PLOTTED => 11:13

Dist	COUNTY	ROUTE	POST MILES TOTAL PROJECT	SHEET No.	TOTAL SHEETS
05	SCr	1	R0.0/10.2	53	157

REGISTERED CIVIL ENGINEER 5-20-11 DATE

6-20-11
PLANS APPROVAL DATE

REGISTERED PROFESSIONAL ENGINEER PETER A CHANDER No. 63988 Exp. 09-30-12 CIVIL STATE OF CALIFORNIA

THE STATE OF CALIFORNIA OR ITS OFFICERS OR AGENTS SHALL NOT BE RESPONSIBLE FOR THE ACCURACY OR COMPLETENESS OF SCANNED COPIES OF THIS PLAN SHEET.

NOTES:

1. USE WHERE DIRECTED BY THE ENGINEER.
2. DIRECTION OF ADJACENT TRAFFIC INDICATED BY ←

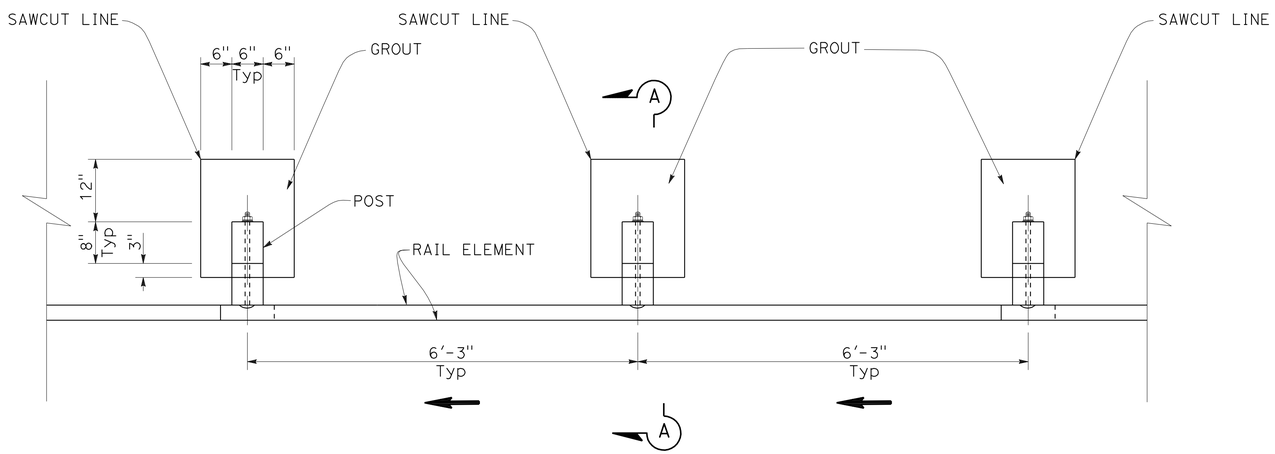

PLAN
NO SCALE

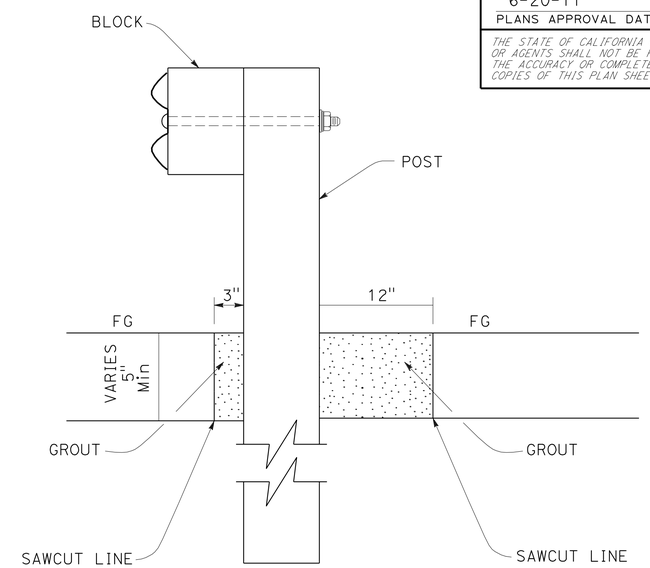

SECTION A-A
NO SCALE

METAL BEAM GUARD RAILING THROUGH ASPHALT CONCRETE

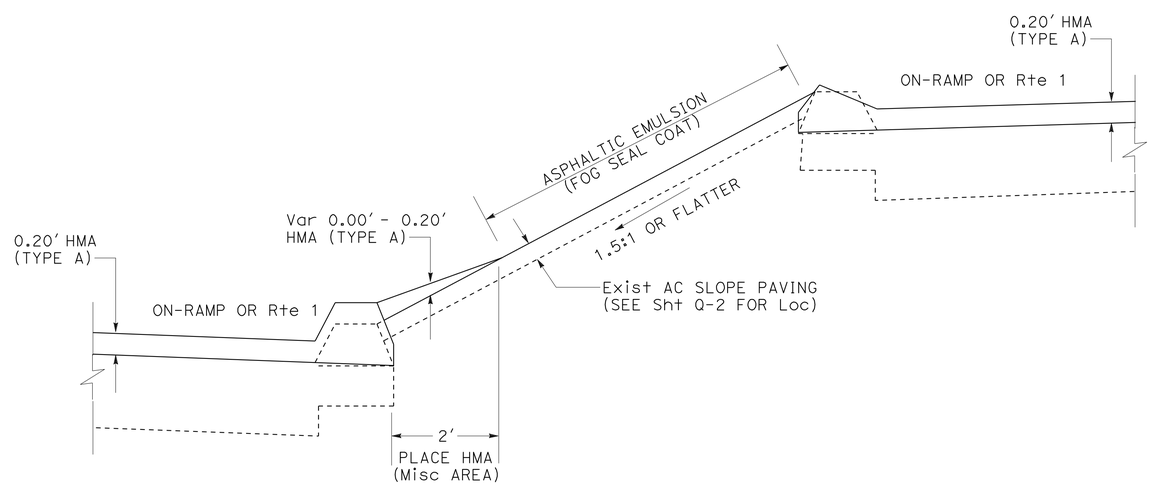

ON-RAMP SLOPE PAVING TREATMENT

EXISTING UTILITY FACILITIES HAVE NOT BEEN PLOTTED ON THESE PLANS

CONSTRUCTION DETAILS

NO SCALE

C-49

STATE OF CALIFORNIA - DEPARTMENT OF TRANSPORTATION
Caltrans 06-DESIGN

FUNCTIONAL SUPERVISOR: ROBERTO BANDA
CALCULATED-DESIGNED BY: PETER CHANDER
CHECKED BY: HAL KENYON
REVISED BY
DATE REVISED

LAST REVISION 05-20-11
DATE PLOTTED => 12-AUG-2011
TIME PLOTTED => 11:13

Dist	COUNTY	ROUTE	POST MILES TOTAL PROJECT	SHEET No.	TOTAL SHEETS
05	SCr	1	R0.0/10.2	54	157

REGISTERED CIVIL ENGINEER 5-20-11 DATE

6-20-11
PLANS APPROVAL DATE

REGISTERED PROFESSIONAL ENGINEER
PETER A CHANDER
No. 63988
Exp. 09-30-12
CIVIL
STATE OF CALIFORNIA

THE STATE OF CALIFORNIA OR ITS OFFICERS OR AGENTS SHALL NOT BE RESPONSIBLE FOR THE ACCURACY OR COMPLETENESS OF SCANNED COPIES OF THIS PLAN SHEET.

NOTES:

1. FOR ACCURATE RIGHT OF WAY DATA, CONTACT RIGHT OF WAY ENGINEERING AT THE DISTRICT OFFICE.

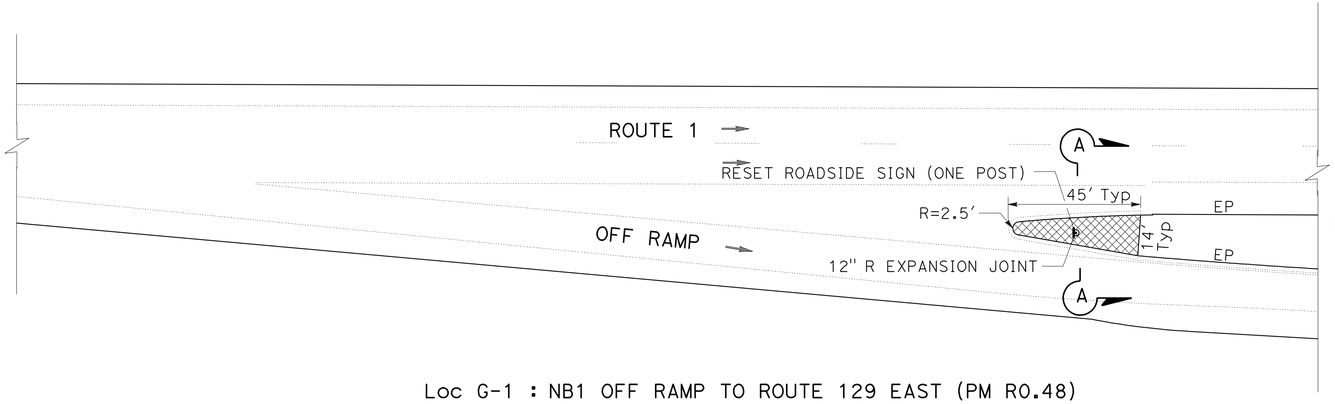

Loc G-1 : NB1 OFF RAMP TO ROUTE 129 EAST (PM R0.48)
Loc G-6 : NB1 OFF RAMP TO RIO DEL MAR Blvd (PM 9.00)
Loc G-11 : SB1 OFF RAMP TO ROUTE 152 EAST (PM R2.98)

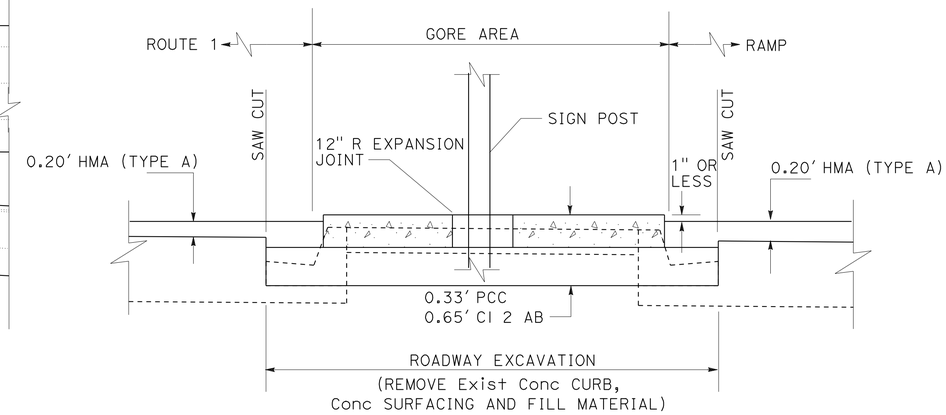

SECTION A-A

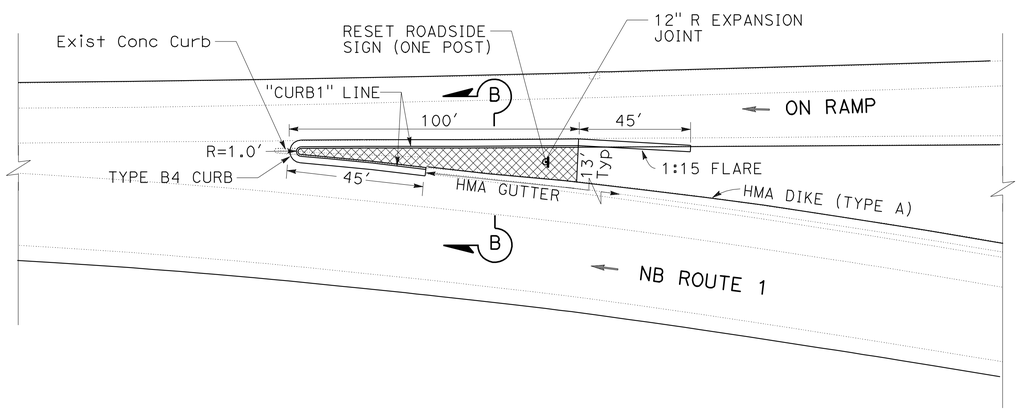

Loc G-2 : NB1 ON RAMP FROM ROUTE 152 WEST (PM R2.80)

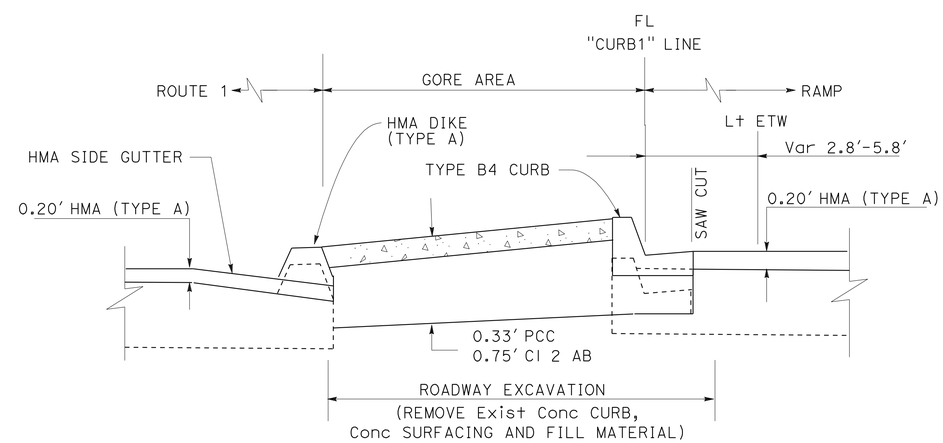

SECTION B-B

CONSTRUCTION DETAILS
(RECONSTRUCT GORE AREA DETAILS)

NO SCALE

C-50

EXISTING UTILITY FACILITIES HAVE NOT BEEN PLOTTED ON THESE PLANS

STATE OF CALIFORNIA - DEPARTMENT OF TRANSPORTATION
Caltrans
06-DESIGN

FUNCTIONAL SUPERVISOR: ROBERTO BANDA
CALCULATED-DESIGNED BY: PETER CHANDER
CHECKED BY: HAL KENYON
REVISED BY
DATE REVISED

LAST REVISION 05-20-11
DATE PLOTTED => 12-AUG-2011
TIME PLOTTED => 11:13

Dist	COUNTY	ROUTE	POST MILES TOTAL PROJECT	SHEET No.	TOTAL SHEETS
05	SCr	1	R0.0/10.2	55	157

REGISTERED CIVIL ENGINEER 5-20-11 DATE

6-20-11
PLANS APPROVAL DATE

REGISTERED PROFESSIONAL ENGINEER
PETER A CHANDER
No. 63988
Exp. 09-30-12
CIVIL
STATE OF CALIFORNIA

THE STATE OF CALIFORNIA OR ITS OFFICERS OR AGENTS SHALL NOT BE RESPONSIBLE FOR THE ACCURACY OR COMPLETENESS OF SCANNED COPIES OF THIS PLAN SHEET.

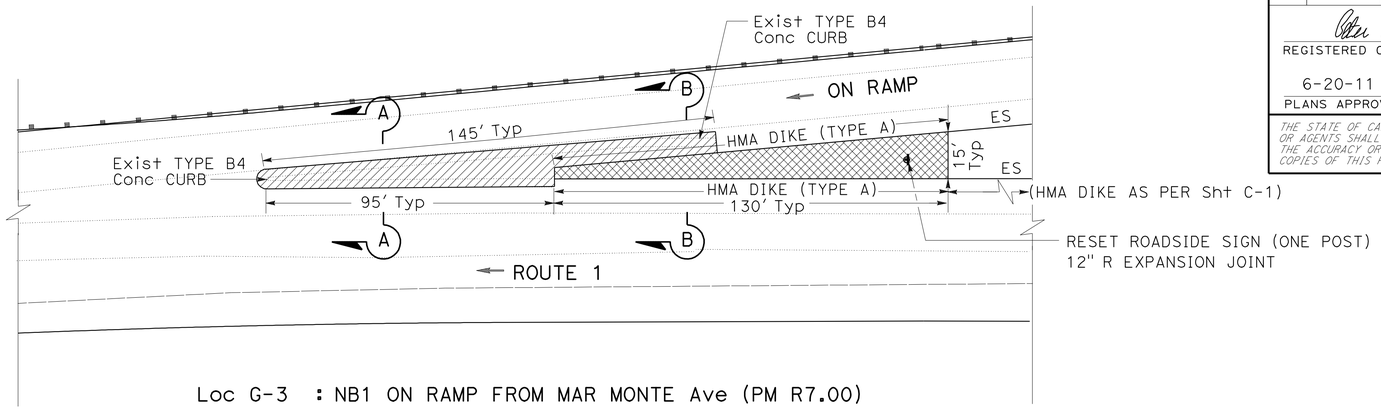

Loc G-3 : NB1 ON RAMP FROM MAR MONTE Ave (PM R7.00)
Loc G-13 : SB1 ON RAMP FROM VISTA POINT REST AREA (PM R5.77)
Loc G-15 : SB1 ON RAMP FROM LARKIN VALLEY Rd (PM R7.48)

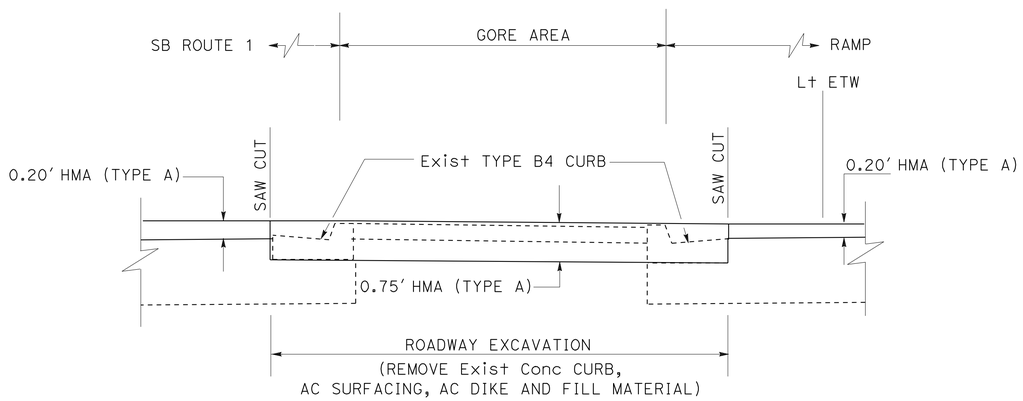

SECTION A-A

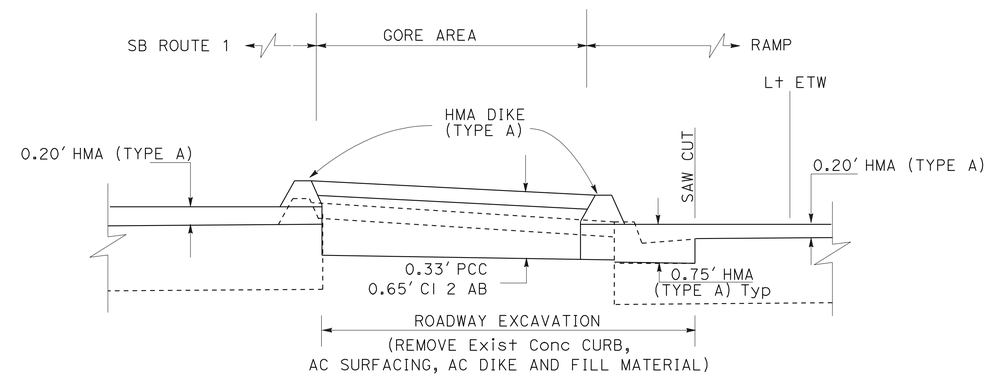

SECTION B-B

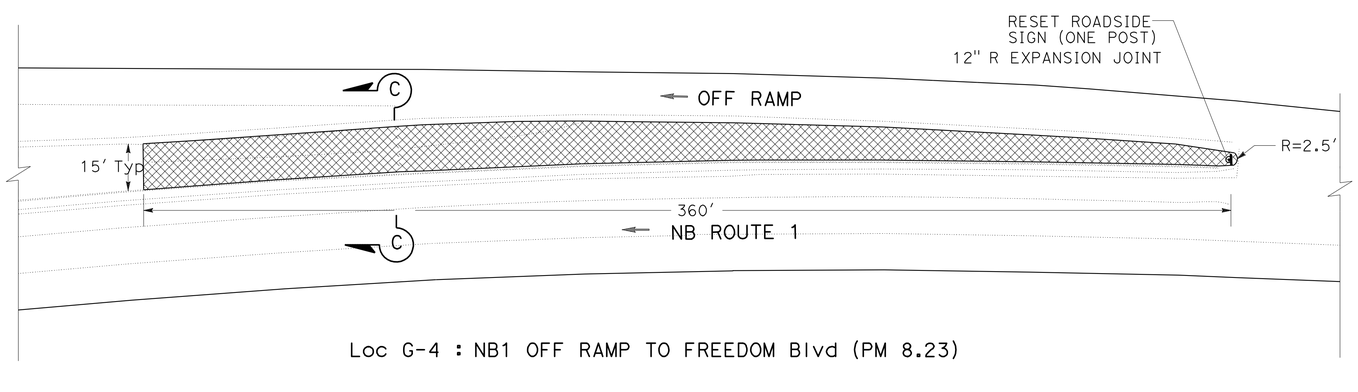

Loc G-4 : NB1 OFF RAMP TO FREEDOM Blvd (PM 8.23)

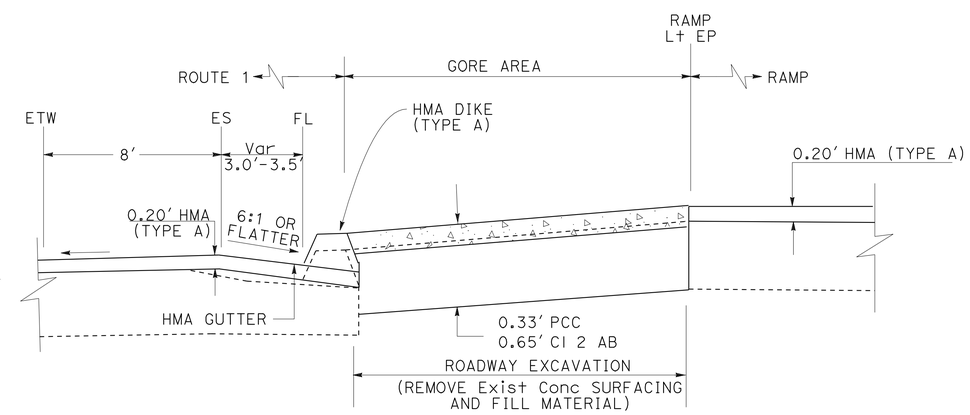

SECTION C-C

RECONSTRUCT GORE AREA DETAILS

EXISTING UTILITY FACILITIES HAVE NOT BEEN PLOTTED ON THESE PLANS

CONSTRUCTION DETAILS

NO SCALE

C-51

REVISED BY | DATE REVISED
PETER CHANDER | HAL KENYON
CALCULATED-DESIGNED BY | CHECKED BY
FUNCTIONAL SUPERVISOR | ROBERTO BANDA
STATE OF CALIFORNIA - DEPARTMENT OF TRANSPORTATION
Caltrans
06-DESIGN

LAST REVISION 05-20-11 | DATE PLOTTED => 12-AUG-2011 | TIME PLOTTED => 11:13

Dist	COUNTY	ROUTE	POST MILES TOTAL PROJECT	SHEET No.	TOTAL SHEETS
05	SCr	1	R0.0/10.2	56	157

REGISTERED CIVIL ENGINEER 5-20-11 DATE

6-20-11
PLANS APPROVAL DATE

PROFESSIONAL ENGINEER REGISTERED PETER A CHANDER No. 63988 Exp. 09-30-12 CIVIL STATE OF CALIFORNIA

THE STATE OF CALIFORNIA OR ITS OFFICERS OR AGENTS SHALL NOT BE RESPONSIBLE FOR THE ACCURACY OR COMPLETENESS OF SCANNED COPIES OF THIS PLAN SHEET.

NOTES:

1. FOR ACCURATE RIGHT OF WAY DATA, CONTACT RIGHT OF WAY ENGINEERING AT THE DISTRICT OFFICE.

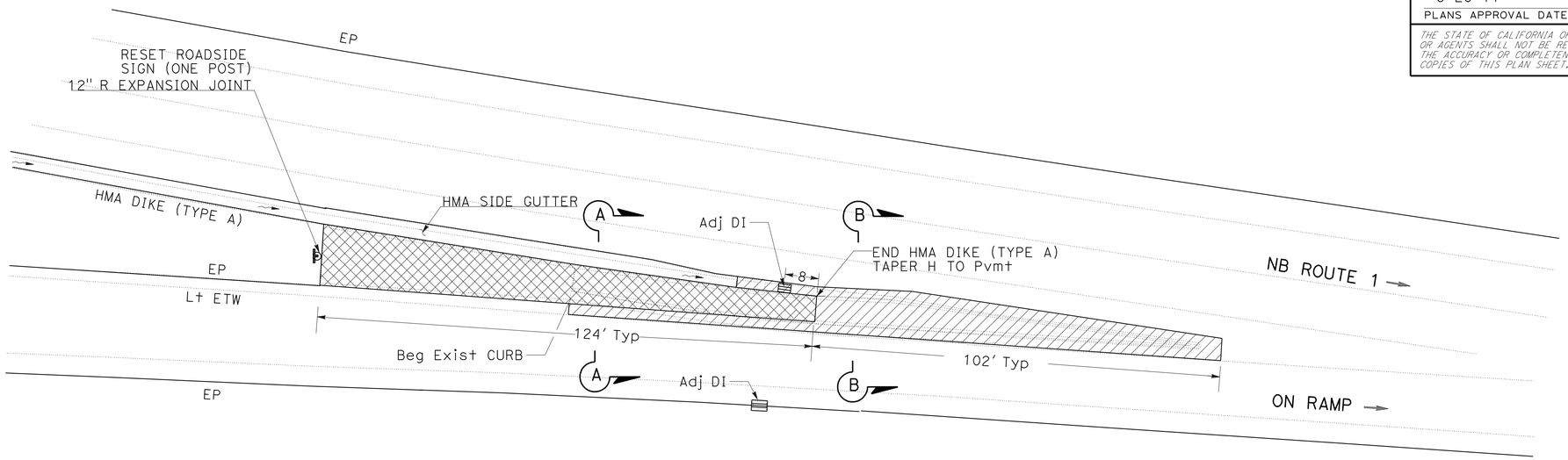

Loc G-5 : NB ROUTE 1 ON RAMP FROM FREEDOM Blvd (PM 8.48)

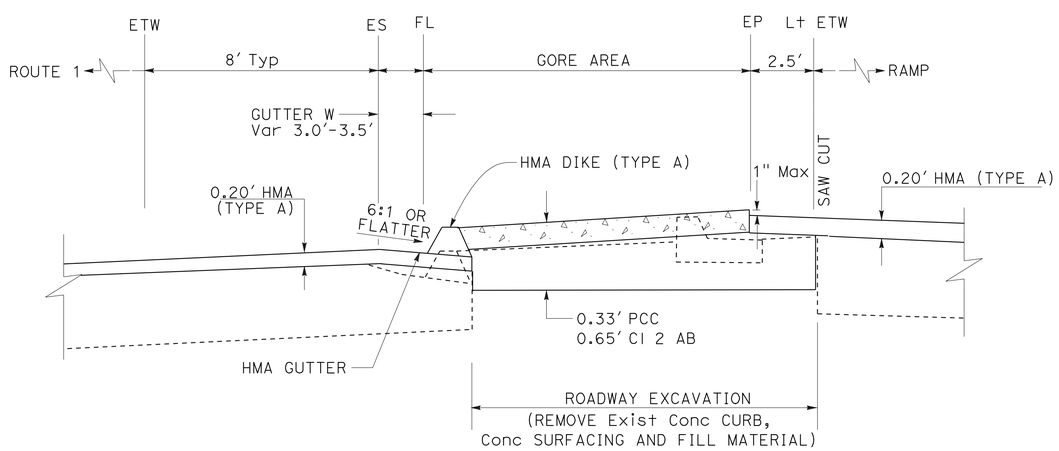

SECTION A-A

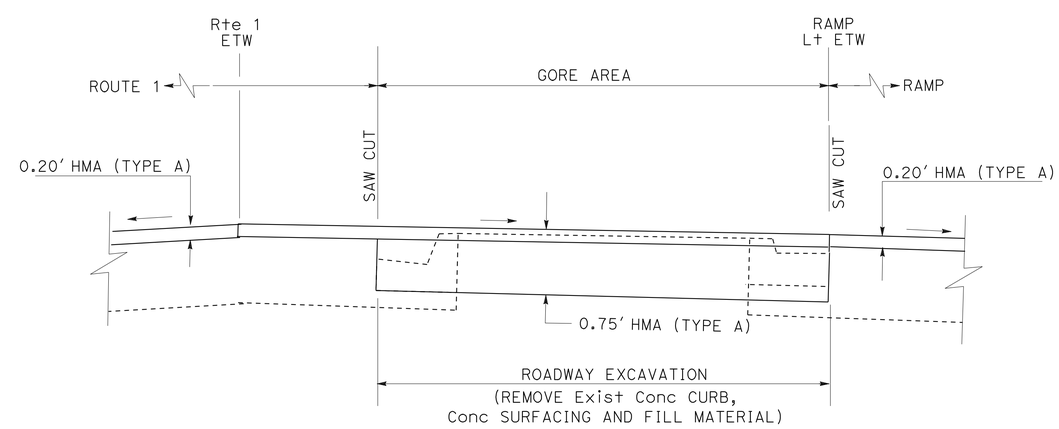

SECTION B-B

RECONSTRUCT GORE AREA DETAILS

EXISTING UTILITY FACILITIES HAVE NOT BEEN PLOTTED ON THESE PLANS

CONSTRUCTION DETAILS

NO SCALE

C-52

STATE OF CALIFORNIA - DEPARTMENT OF TRANSPORTATION
Caltrans
06-DESIGN

FUNCTIONAL SUPERVISOR: ROBERTO BANDA
CALCULATED-DESIGNED BY: MICAELA GARCIA
CHECKED BY: PETER CHANDER
REVISED BY
DATE REVISED

LAST REVISION 05-20-11
DATE PLOTTED => 12-AUG-2011
TIME PLOTTED => 11:13

Dist	COUNTY	ROUTE	POST MILES TOTAL PROJECT	SHEET No.	TOTAL SHEETS
05	SCr	1	R0.0/10.2	57	157

REGISTERED CIVIL ENGINEER 5-20-11 DATE

6-20-11
PLANS APPROVAL DATE

REGISTERED PROFESSIONAL ENGINEER PETER A CHANDER No. 63988 Exp. 09-30-12 CIVIL STATE OF CALIFORNIA

THE STATE OF CALIFORNIA OR ITS OFFICERS OR AGENTS SHALL NOT BE RESPONSIBLE FOR THE ACCURACY OR COMPLETENESS OF SCANNED COPIES OF THIS PLAN SHEET.

NOTES:

1. FOR ACCURATE RIGHT OF WAY DATA, CONTACT RIGHT OF WAY ENGINEERING AT THE DISTRICT OFFICE.

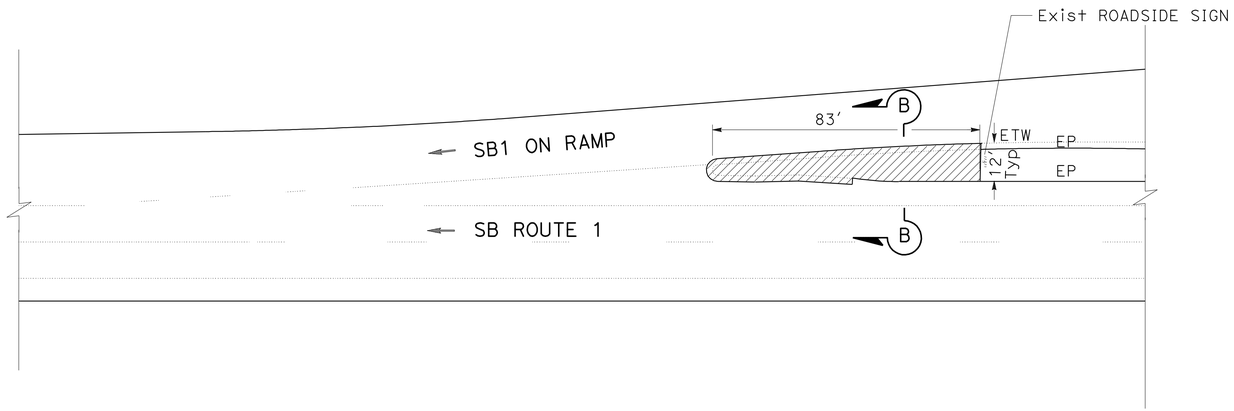

Loc G-8 : SB1 ON RAMP FROM ROUTE 129 (PM R0.50)

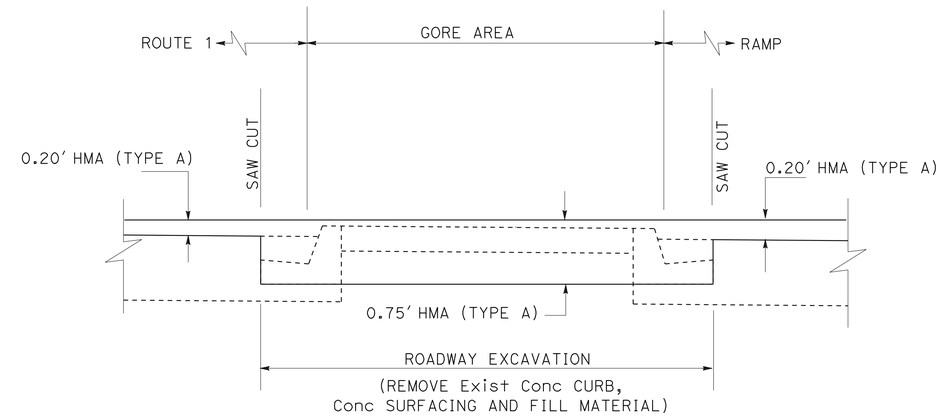

SECTION B-B

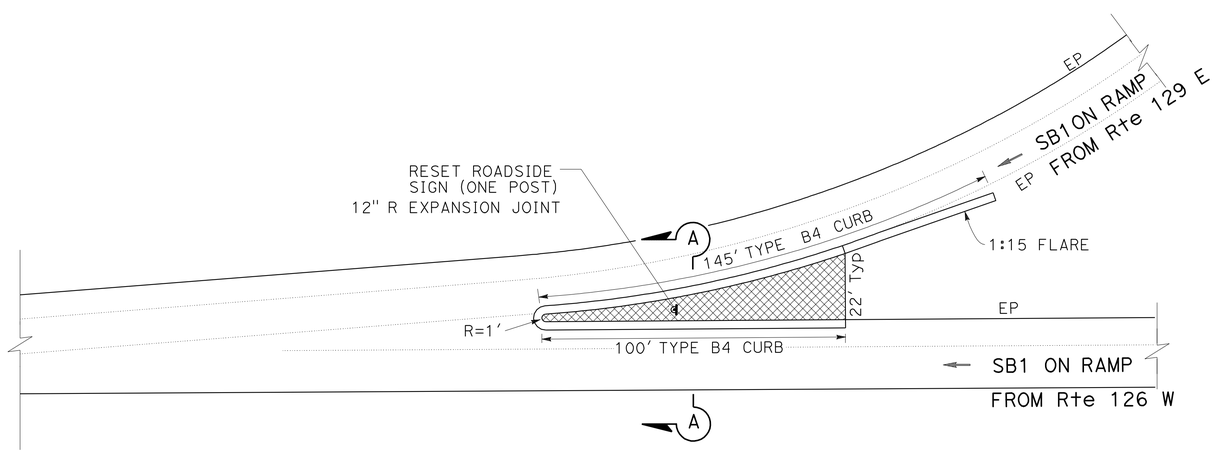

Loc G-9 : SB1 ON RAMPS FROM ROUTE 129 E AND W (PM R0.58)

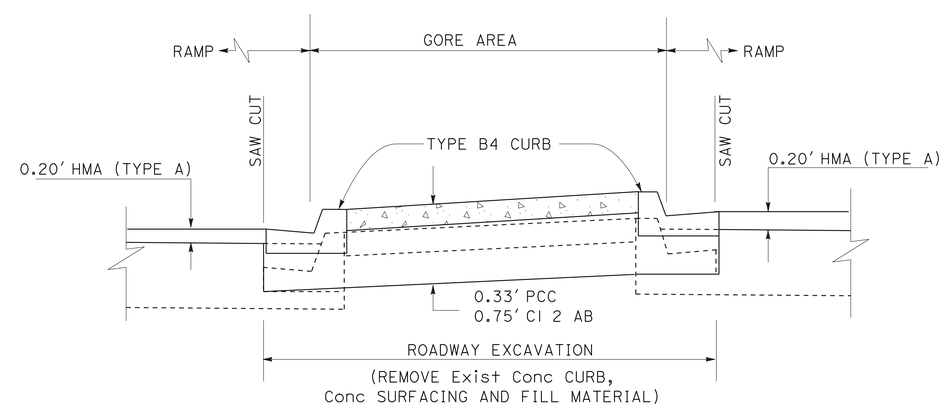

SECTION A-A

RECONSTRUCT GORE AREA DETAILS

EXISTING UTILITY FACILITIES HAVE NOT BEEN PLOTTED ON THESE PLANS

CONSTRUCTION DETAILS

NO SCALE

C-53

STATE OF CALIFORNIA - DEPARTMENT OF TRANSPORTATION
Caltrans®
06-DESIGN

FUNCTIONAL SUPERVISOR: ROBERTO BANDA

CALCULATED-DESIGNED BY: PETER CHANDER
CHECKED BY: MICAELA GARCIA

REVISED BY
DATE REVISED

LAST REVISION 05-20-11
DATE PLOTTED => 12-AUG-2011
TIME PLOTTED => 11:13

Dist	COUNTY	ROUTE	POST MILES TOTAL PROJECT	SHEET No.	TOTAL SHEETS
05	SCr	1	R0.0/10.2	58	157

REGISTERED CIVIL ENGINEER DATE 5-20-11

PLANS APPROVAL DATE 6-20-11

REGISTERED PROFESSIONAL ENGINEER PETER A CHANDER No. 63988 Exp 09-30-12 CIVIL STATE OF CALIFORNIA

THE STATE OF CALIFORNIA OR ITS OFFICERS OR AGENTS SHALL NOT BE RESPONSIBLE FOR THE ACCURACY OR COMPLETENESS OF SCANNED COPIES OF THIS PLAN SHEET.

NOTES:

1. FOR ACCURATE RIGHT OF WAY DATA, CONTACT RIGHT OF WAY ENGINEERING AT THE DISTRICT OFFICE.

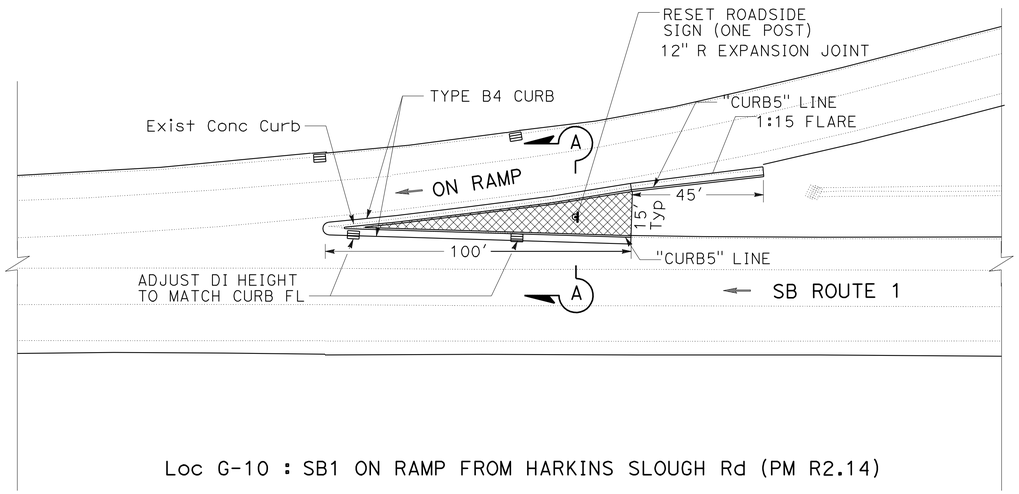

Loc G-10 : SB1 ON RAMP FROM HARKINS SLOUGH Rd (PM R2.14)

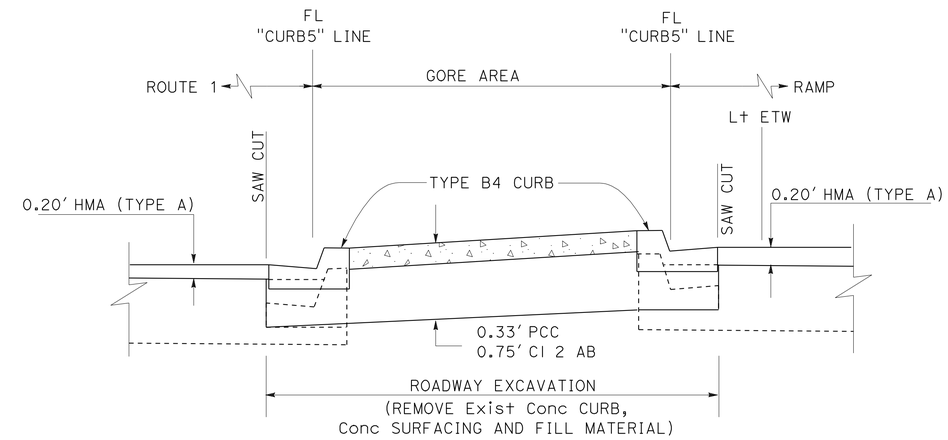

SECTION A-A

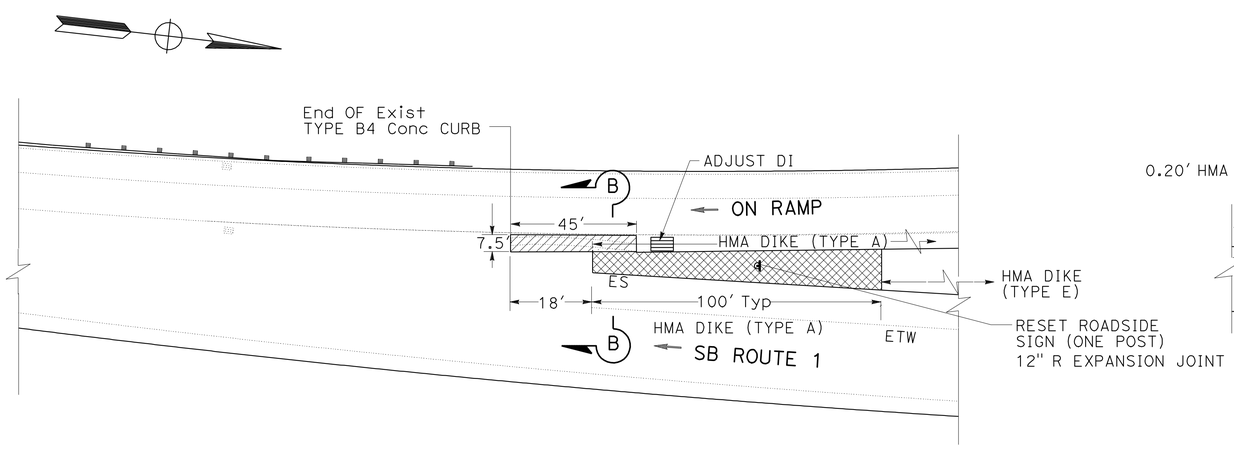

Loc G-12 : SB1 ON RAMP FROM BUENA VISTA Dr (PM R3.93)

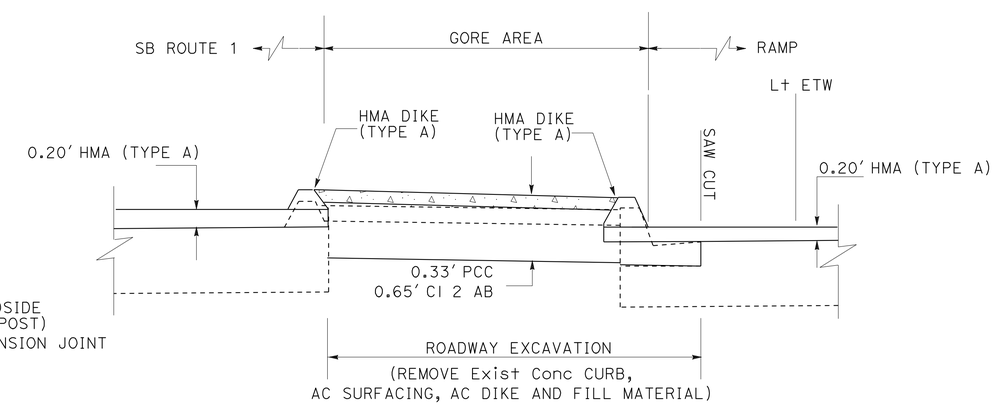

SECTION B-B

RECONSTRUCT GORE AREA DETAILS

EXISTING UTILITY FACILITIES HAVE NOT BEEN PLOTTED ON THESE PLANS

CONSTRUCTION DETAILS

NO SCALE

C-54

STATE OF CALIFORNIA - DEPARTMENT OF TRANSPORTATION
Caltrans
06-DESIGN

FUNCTIONAL SUPERVISOR: ROBERTO BANDA
CALCULATED-DESIGNED BY: PETER CHANDER
CHECKED BY: MICAELA GARCIA
REVISED BY
DATE REVISED

LAST REVISION 05-20-11
DATE PLOTTED => 12-AUG-2011
TIME PLOTTED => 11:13

Dist	COUNTY	ROUTE	POST MILES TOTAL PROJECT	SHEET No.	TOTAL SHEETS
05	SCr	1	R0.0/10.2	59	157

REGISTERED CIVIL ENGINEER 5-20-11 DATE

6-20-11
PLANS APPROVAL DATE

REGISTERED PROFESSIONAL ENGINEER PETER A CHANDER No. 63988 Exp 09-30-12 CIVIL STATE OF CALIFORNIA

THE STATE OF CALIFORNIA OR ITS OFFICERS OR AGENTS SHALL NOT BE RESPONSIBLE FOR THE ACCURACY OR COMPLETENESS OF SCANNED COPIES OF THIS PLAN SHEET.

NOTES:

1. FOR ACCURATE RIGHT OF WAY DATA, CONTACT RIGHT OF WAY ENGINEERING AT THE DISTRICT OFFICE.

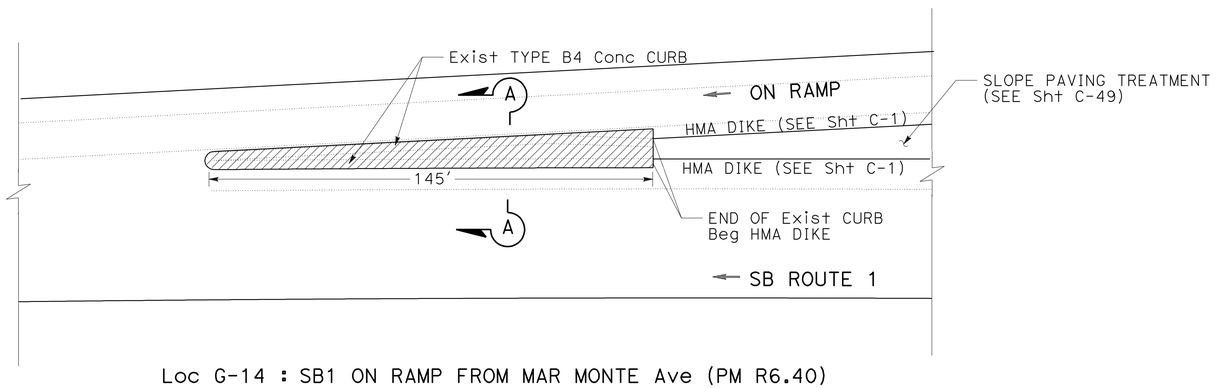

Loc G-14 : SB1 ON RAMP FROM MAR MONTE Ave (PM R6.40)

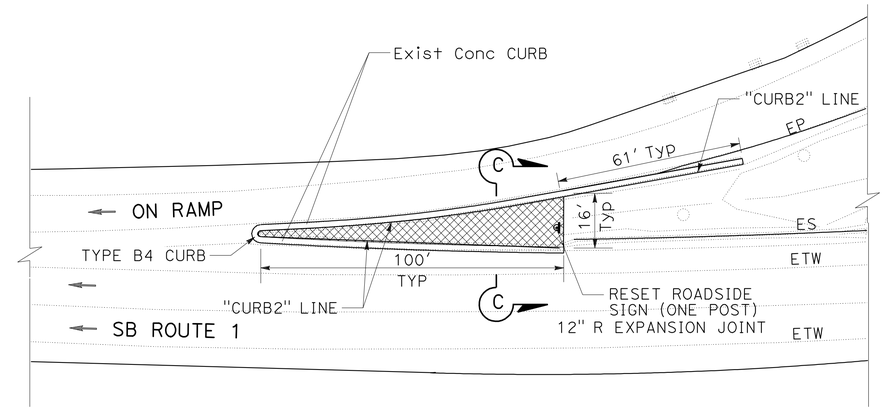

Loc G-16 : SB1 ON RAMP FROM FREEDOM Blvd (PM 8.3)

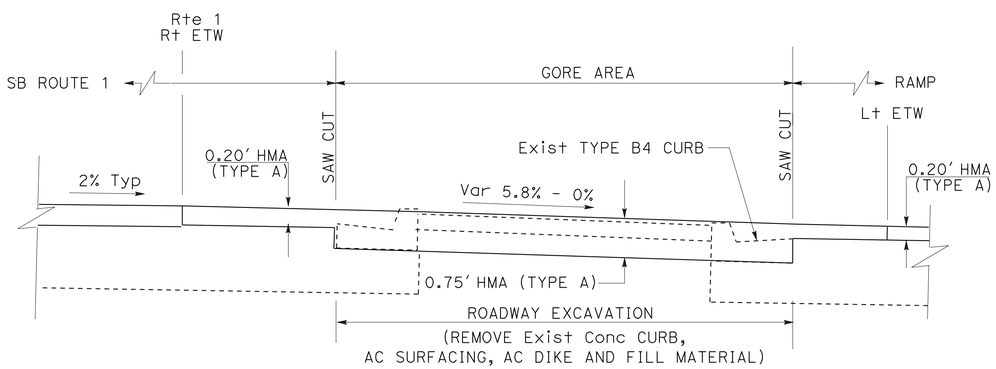

SECTION A-A

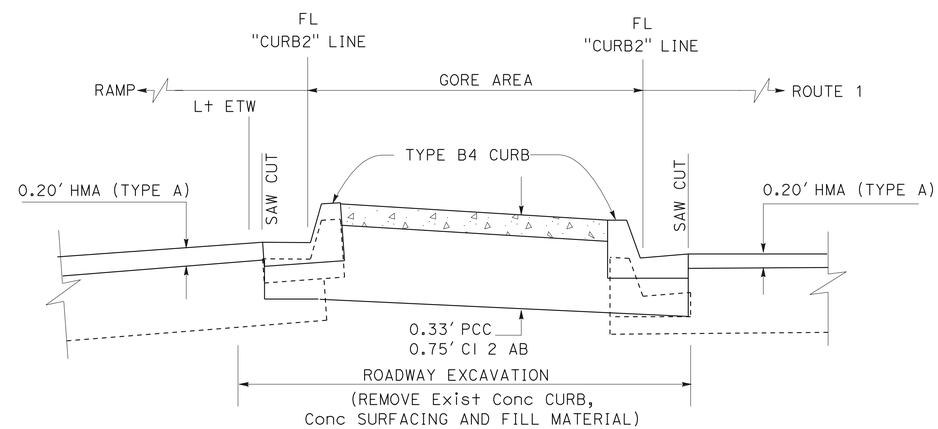

SECTION C-C

RECONSTRUCT GORE AREA DETAILS

EXISTING UTILITY FACILITIES HAVE NOT BEEN PLOTTED ON THESE PLANS

CONSTRUCTION DETAILS

NO SCALE

C-55

STATE OF CALIFORNIA - DEPARTMENT OF TRANSPORTATION
Caltrans
06-DESIGN

FUNCTIONAL SUPERVISOR: ROBERTO BANDA
CALCULATED-DESIGNED BY: MICAELA GARCIA
CHECKED BY: PETER CHANDER
REVISED BY
DATE REVISED

LAST REVISION 05-20-11
DATE PLOTTED => 12-AUG-2011
TIME PLOTTED => 11:14

Dist	COUNTY	ROUTE	POST MILES TOTAL PROJECT	SHEET No.	TOTAL SHEETS
05	SCr	1	R0.0/10.2	60	157

REGISTERED CIVIL ENGINEER 5-20-11 DATE

6-20-11
PLANS APPROVAL DATE

REGISTERED PROFESSIONAL ENGINEER PETER A CHANDER No. 63988 Exp 09-30-12 CIVIL STATE OF CALIFORNIA

THE STATE OF CALIFORNIA OR ITS OFFICERS OR AGENTS SHALL NOT BE RESPONSIBLE FOR THE ACCURACY OR COMPLETENESS OF SCANNED COPIES OF THIS PLAN SHEET.

NOTES:

1. FOR ACCURATE RIGHT OF WAY DATA, CONTACT RIGHT OF WAY ENGINEERING AT THE DISTRICT OFFICE.

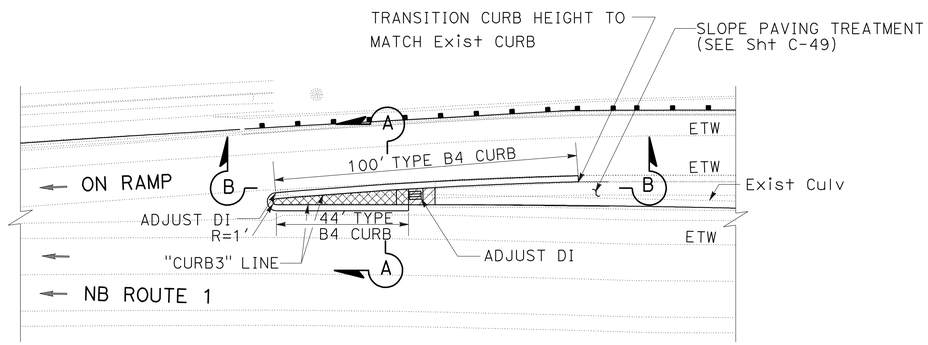

LOCATION G-7
NB ROUTE1 ON RAMP FROM RIO DEL MAR Blvd (PM 9.26)

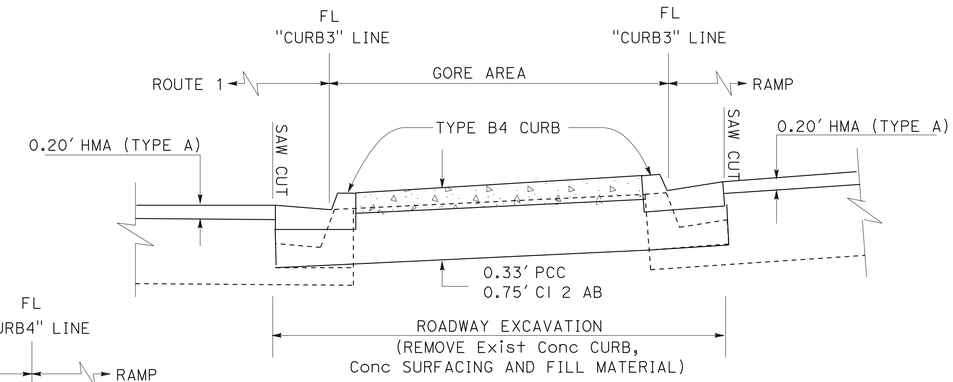

SECTION A-A

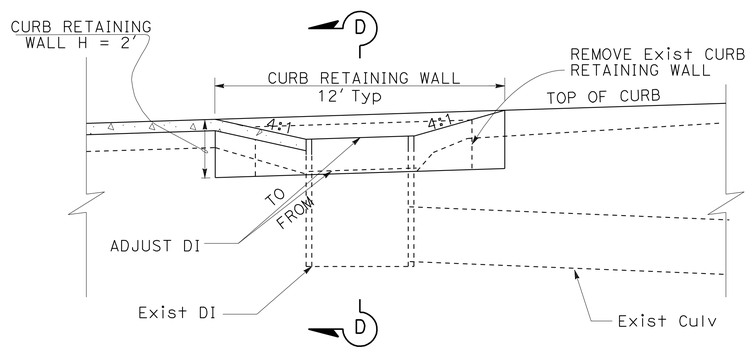

SECTION B-B

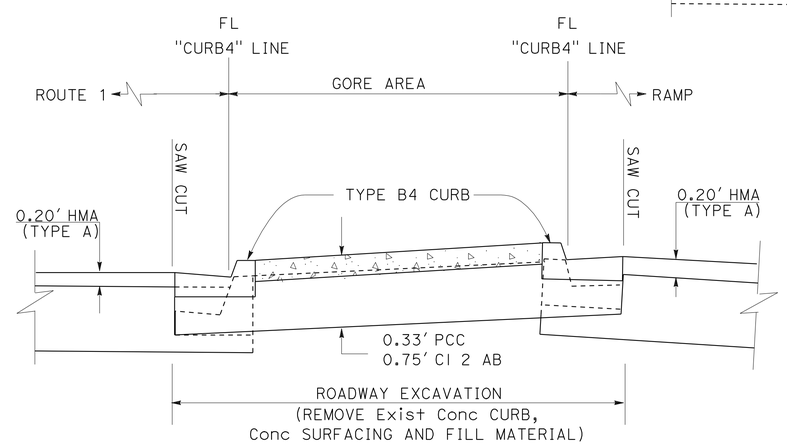

SECTION C-C

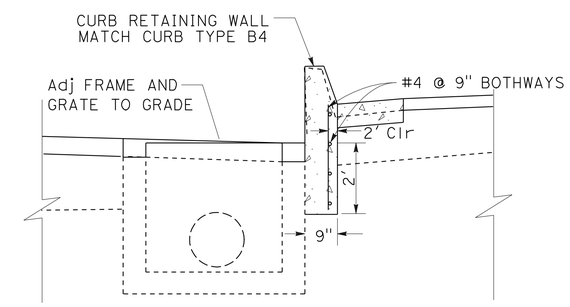

SECTION D-D

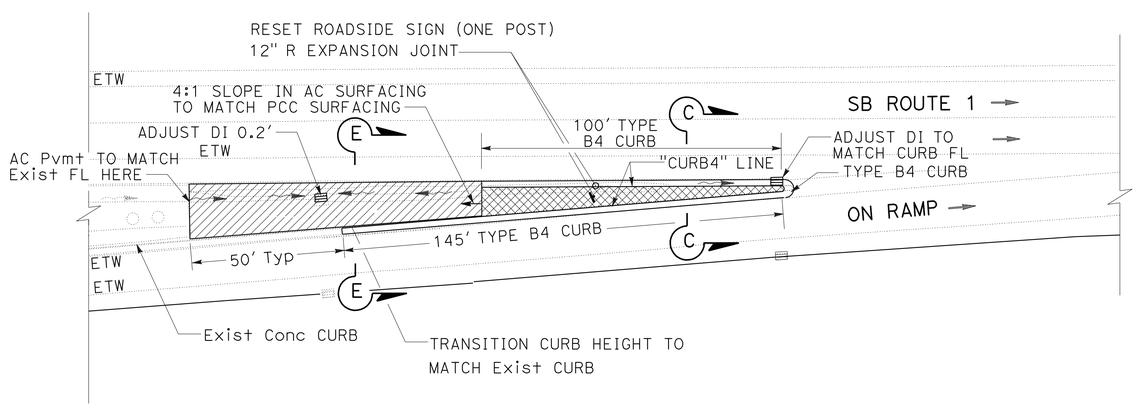

LOCATION G-17
SB1 ON RAMP FROM RIO DEL MAR Blvd (PM 9.00)

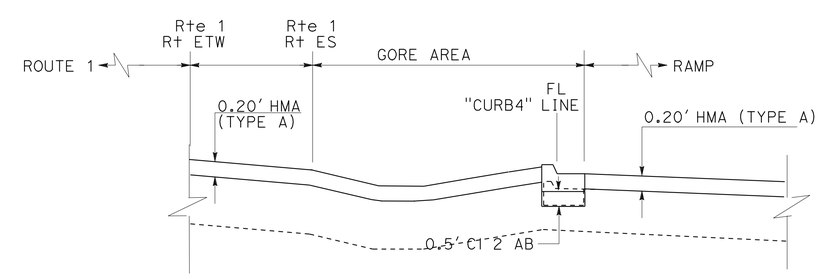

SECTION E-E

RECONSTRUCT GORE AREA DETAILS

CONSTRUCTION DETAILS

NO SCALE

EXISTING UTILITY FACILITIES HAVE NOT BEEN PLOTTED ON THESE PLANS

C-56

STATE OF CALIFORNIA - DEPARTMENT OF TRANSPORTATION
06-DESIGN
Caltrans
FUNCTIONAL SUPERVISOR ROBERTO BANDA
CALCULATED-DESIGNED BY MICAELA GARCIA
CHECKED BY PETER CHANDER
REVISED BY
DATE REVISED

LAST REVISION 05-20-11
DATE PLOTTED => 12-AUG-2011
TIME PLOTTED => 11:14

Dist	COUNTY	ROUTE	POST MILES TOTAL PROJECT	SHEET No.	TOTAL SHEETS
05	SCr	1	R0.0/10.2	61	157

REGISTERED CIVIL ENGINEER 5-20-11 DATE

6-20-11
PLANS APPROVAL DATE

REGISTERED PROFESSIONAL ENGINEER
PETER A CHANDER
No. 63988
Exp. 09-30-12
CIVIL
STATE OF CALIFORNIA

THE STATE OF CALIFORNIA OR ITS OFFICERS OR AGENTS SHALL NOT BE RESPONSIBLE FOR THE ACCURACY OR COMPLETENESS OF SCANNED COPIES OF THIS PLAN SHEET.

LEGEND

TOP OF MEDIAN BARRIER PROFILE

NB BOTTOM OF MEDIAN BARRIER PROFILE

SB BOTTOM OF MEDIAN BARRIER PROFILE

CURVE DATA

No.	R	Δ	T	L
1	9000.0	-0°50′15″	65.79	131.57

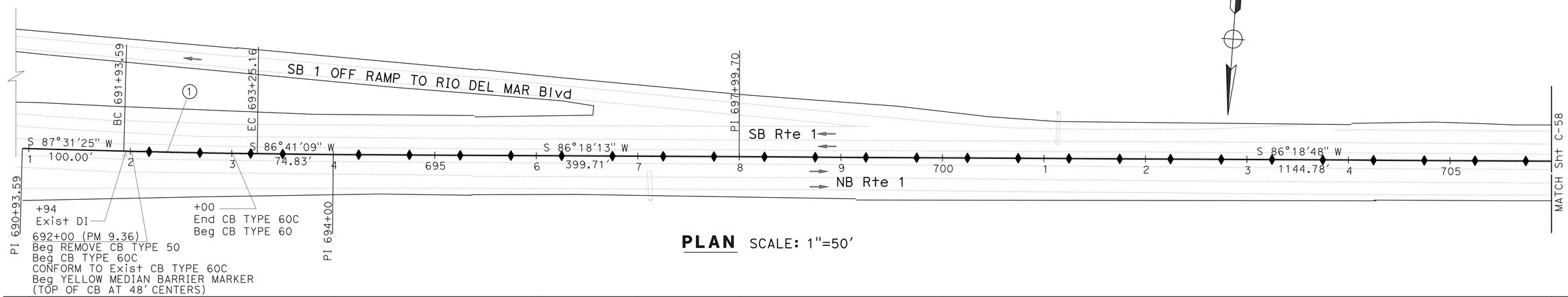

PLAN SCALE: 1″=50′

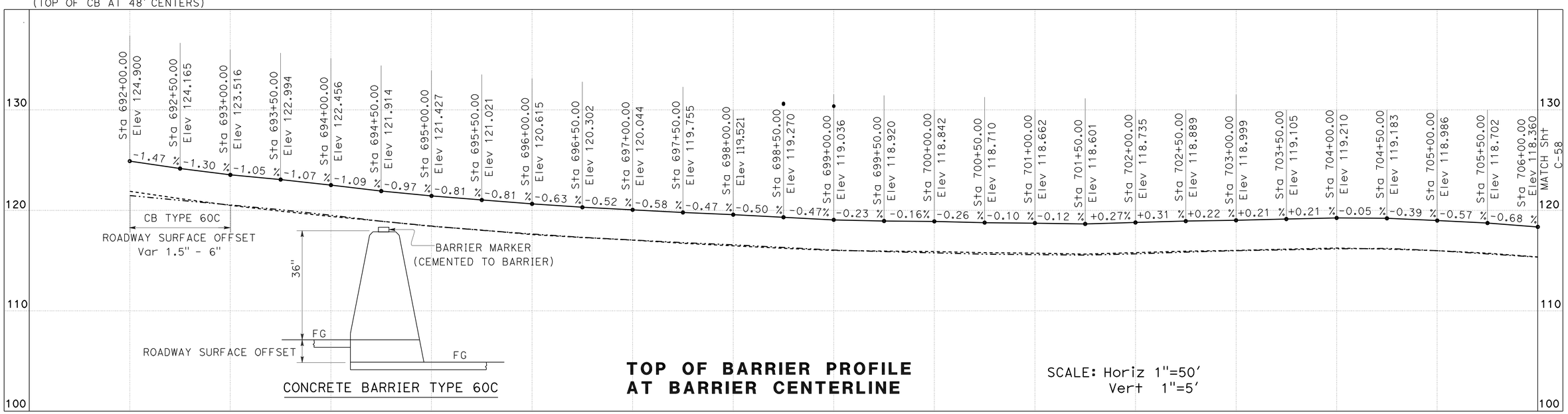

TOP OF BARRIER PROFILE AT BARRIER CENTERLINE

SCALE: Horiz 1″=50′
Vert 1″=5′

REPLACE CONCRETE MEDIAN BARRIER DETAIL
PM 9.37 TO PM 10.15

EXISTING UTILITY FACILITIES HAVE NOT BEEN PLOTTED ON THESE PLANS

CONSTRUCTION DETAILS

SCALE: AS SHOWN

C-57

REVISED BY | DATE REVISED
PETER CHANDER | HAL KENYON
CALCULATED-DESIGNED BY | CHECKED BY
FUNCTIONAL SUPERVISOR | ROBERTO BANDA
STATE OF CALIFORNIA - DEPARTMENT OF TRANSPORTATION
Caltrans
06-DESIGN

LAST REVISION 05-20-11 | DATE PLOTTED => 12-AUG-2011 | TIME PLOTTED => 11:14

Dist	COUNTY	ROUTE	POST MILES TOTAL PROJECT	SHEET No.	TOTAL SHEETS
05	SCr	1	R0.0/10.2	62	157

REGISTERED CIVIL ENGINEER 5-20-11 DATE

6-20-11
PLANS APPROVAL DATE

REGISTERED PROFESSIONAL ENGINEER PETER A CHANDER No. 63988 Exp. 09-30-12 CIVIL STATE OF CALIFORNIA

THE STATE OF CALIFORNIA OR ITS OFFICERS OR AGENTS SHALL NOT BE RESPONSIBLE FOR THE ACCURACY OR COMPLETENESS OF SCANNED COPIES OF THIS PLAN SHEET.

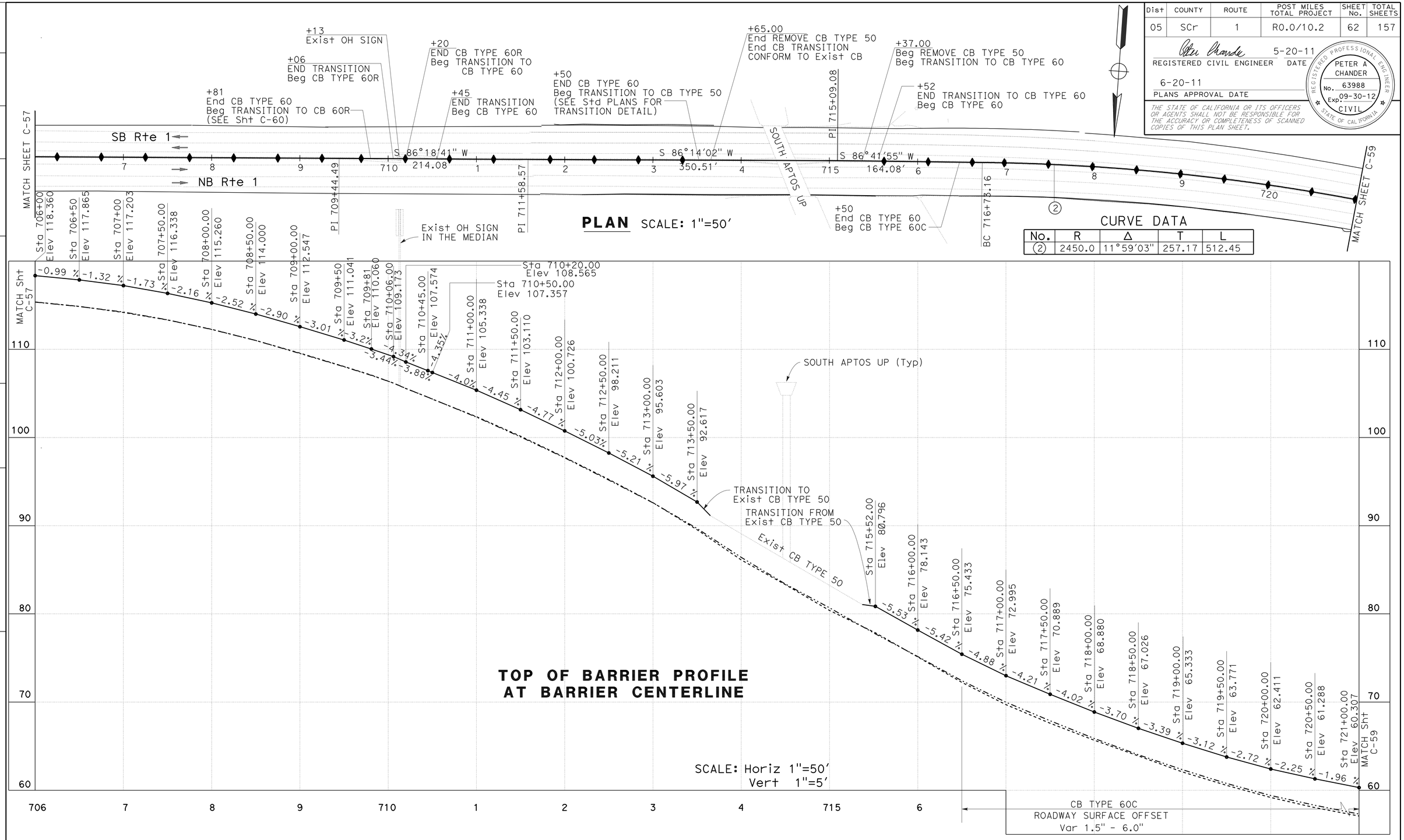

CURVE DATA

No.	R	Δ	T	L
2	2450.0	11°59'03"	257.17	512.45

REPLACE CONCRETE MEDIAN BARRIER DETAIL
PM 9.37 TO PM 10.15

EXISTING UTILITY FACILITIES HAVE NOT BEEN PLOTTED ON THESE PLANS

CONSTRUCTION DETAILS

SCALE: AS SHOWN

C-58

STATE OF CALIFORNIA - DEPARTMENT OF TRANSPORTATION
Caltrans
06-DESIGN

FUNCTIONAL SUPERVISOR: ROBERTO BANDA
CALCULATED-DESIGNED BY: HAL KENYON
CHECKED BY: PETER CHANDER
REVISED BY
DATE REVISED

LAST REVISION 05-20-11
DATE PLOTTED => 12-AUG-2011
TIME PLOTTED => 11:14

Dist	COUNTY	ROUTE	POST MILES TOTAL PROJECT	SHEET No.	TOTAL SHEETS
05	SCr	1	R0.0/10.2	63	157

REGISTERED CIVIL ENGINEER 5-20-11 DATE

6-20-11
PLANS APPROVAL DATE

REGISTERED PROFESSIONAL ENGINEER PETER A CHANDER No. 63988 Exp 09-30-12 CIVIL STATE OF CALIFORNIA

THE STATE OF CALIFORNIA OR ITS OFFICERS OR AGENTS SHALL NOT BE RESPONSIBLE FOR THE ACCURACY OR COMPLETENESS OF SCANNED COPIES OF THIS PLAN SHEET.

CURVE DATA

No.	R	Δ	T	L
3	8000.0	0°49'48"	57.94	115.87
4	2100.0	22°54'54"	257.17	839.88

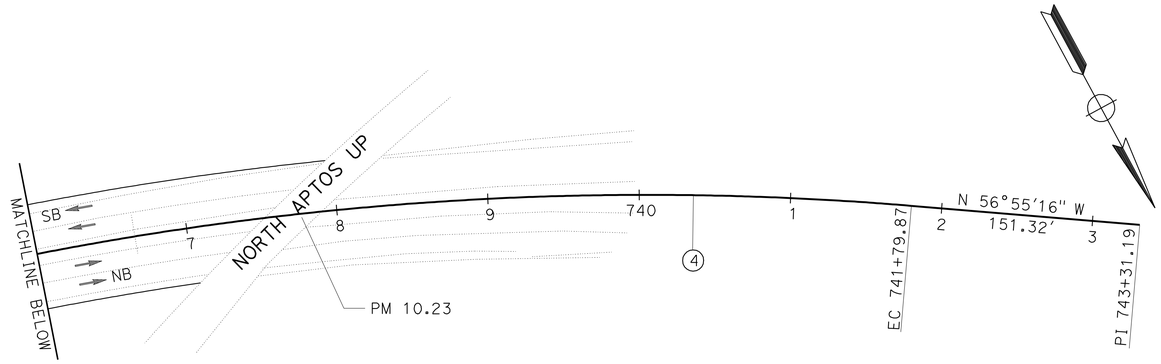

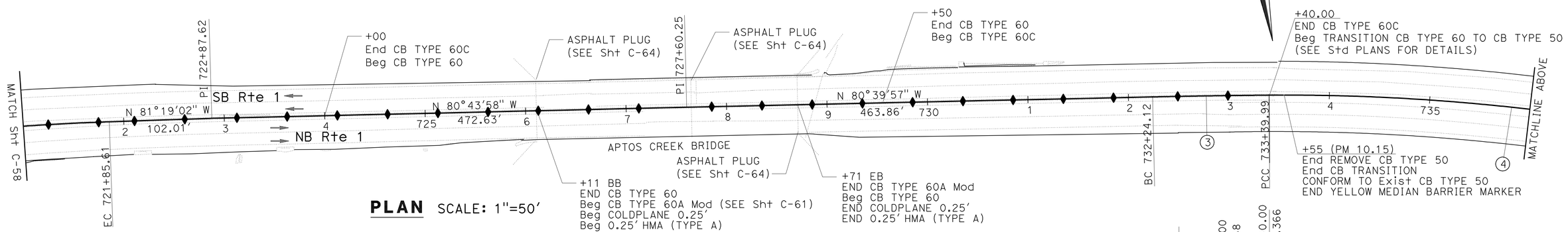

PLAN SCALE: 1"=50'

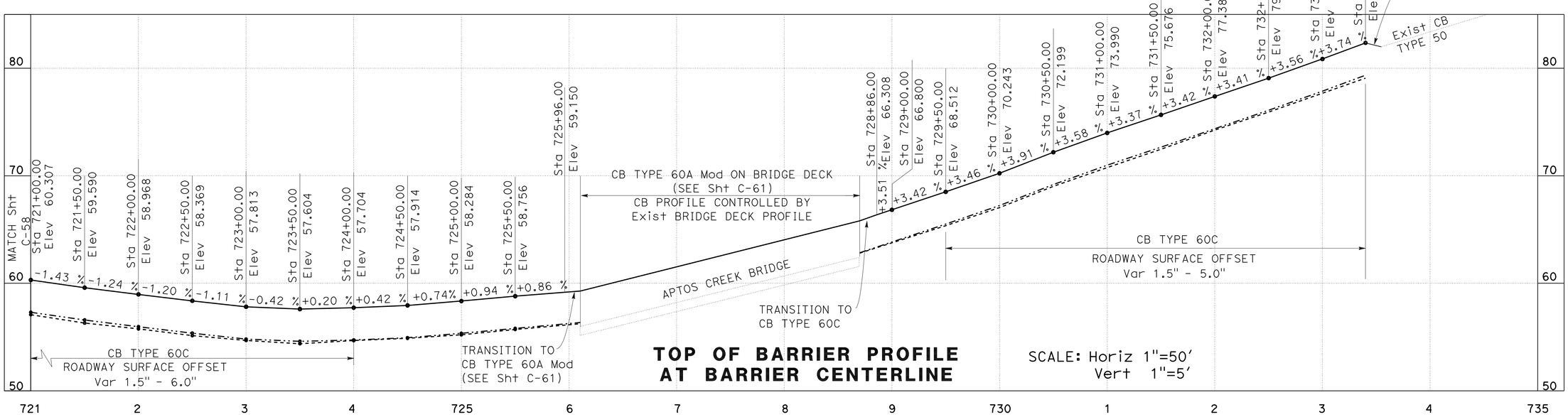

TOP OF BARRIER PROFILE AT BARRIER CENTERLINE

SCALE: Horiz 1"=50'
Vert 1"=5'

REPLACE CONCRETE MEDIAN BARRIER DETAIL
PM 9.37 TO PM 10.15

EXISTING UTILITY FACILITIES HAVE NOT BEEN PLOTTED ON THESE PLANS

CONSTRUCTION DETAILS

SCALE: AS SHOWN

C-59

STATE OF CALIFORNIA - DEPARTMENT OF TRANSPORTATION
Caltrans®
06-DESIGN

FUNCTIONAL SUPERVISOR: ROBERTO BANDA
CALCULATED-DESIGNED BY: PETER CHANDER
CHECKED BY: HAL KENYON
REVISED BY
DATE REVISED

LAST REVISION 05-20-11
DATE PLOTTED => 12-AUG-2011
TIME PLOTTED => 11:14

Dist	COUNTY	ROUTE	POST MILES TOTAL PROJECT	SHEET No.	TOTAL SHEETS
05	SCr	1	R0.0/10.2	64	157

REGISTERED CIVIL ENGINEER 5-20-11 DATE

6-20-11
PLANS APPROVAL DATE

REGISTERED PROFESSIONAL ENGINEER PETER A CHANDER No. 63988 Exp. 09-30-12 CIVIL STATE OF CALIFORNIA

THE STATE OF CALIFORNIA OR ITS OFFICERS OR AGENTS SHALL NOT BE RESPONSIBLE FOR THE ACCURACY OR COMPLETENESS OF SCANNED COPIES OF THIS PLAN SHEET.

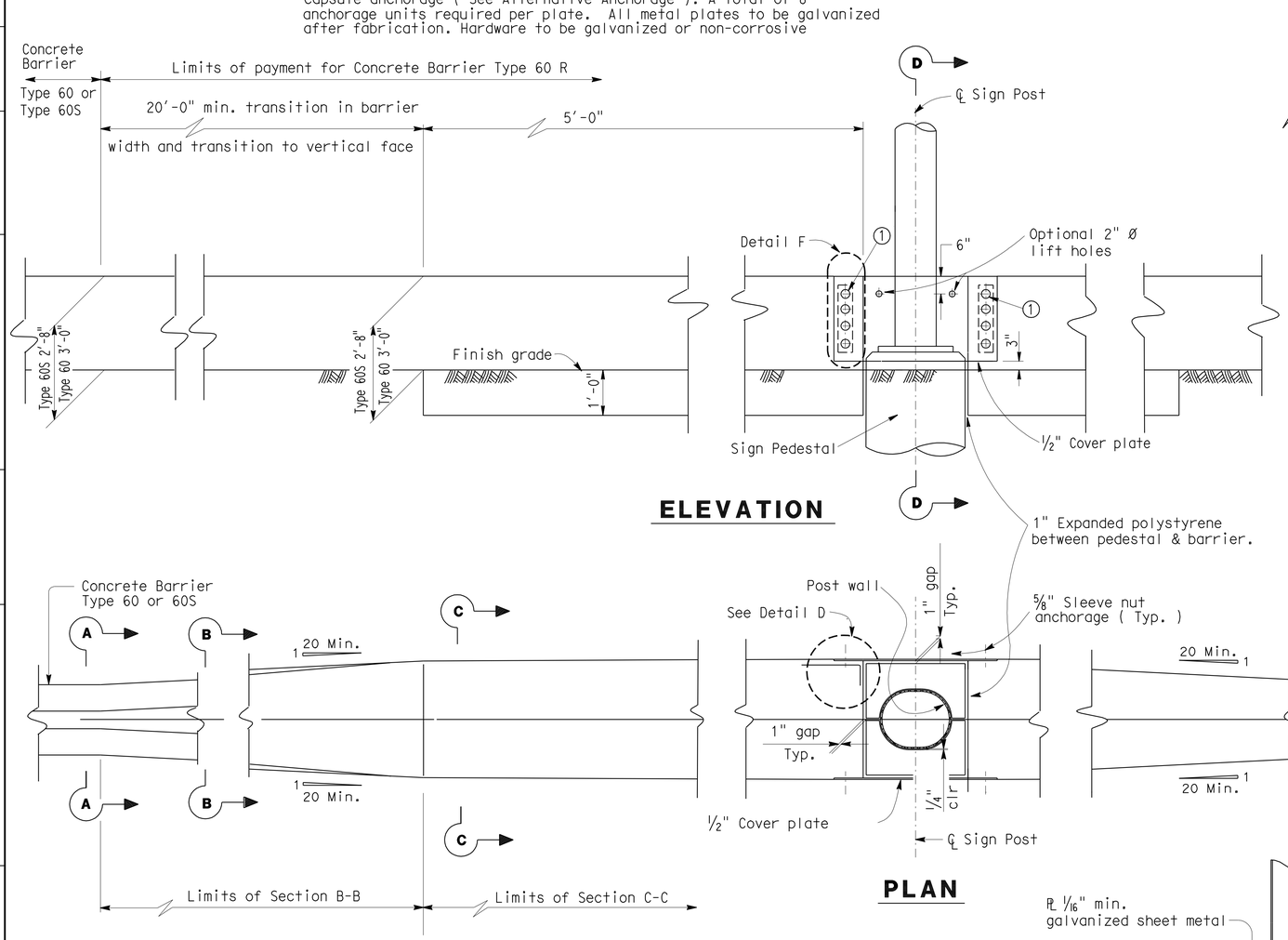

ELEVATION

PLAN

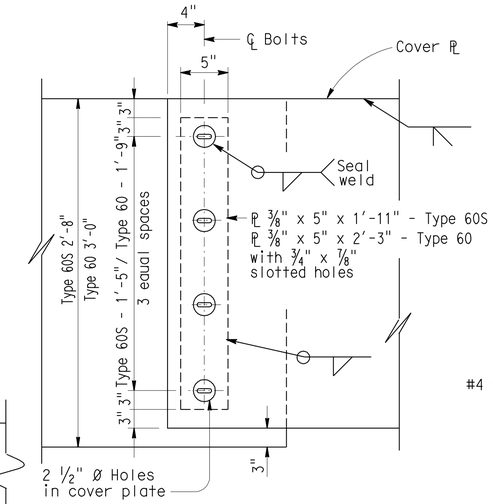

DETAIL F

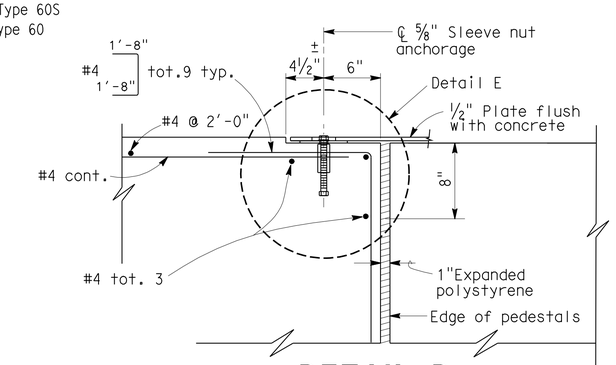

DETAIL D

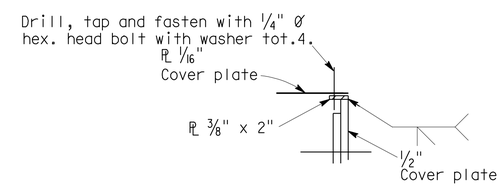

DETAIL G

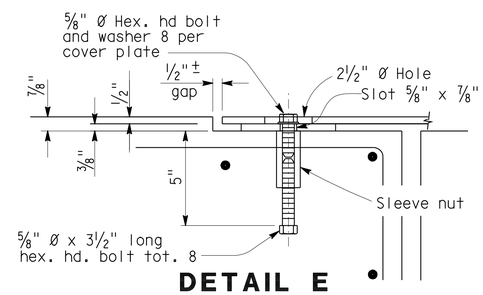

DETAIL E

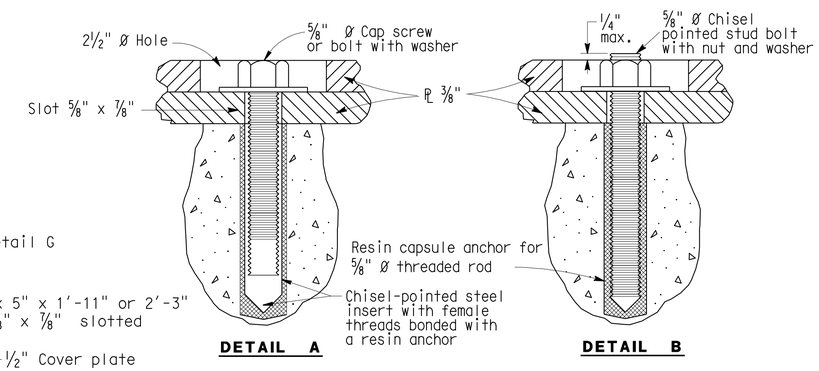

DETAIL A DETAIL B

ALTERNATIVE ANCHORAGE

NOTES: 1) Resin capsule anchorage is subject to approval of the Engineer. Installation procedures shall comply with manufacturer's instructions.

2) Detail B similar to Detail A except for anchorage devices.

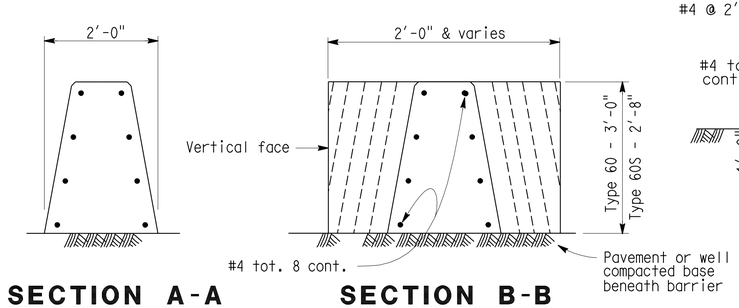

SECTION A-A SECTION B-B

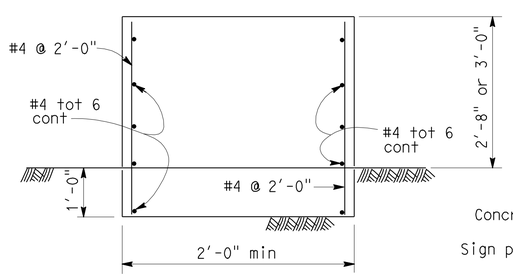

SECTION C-C

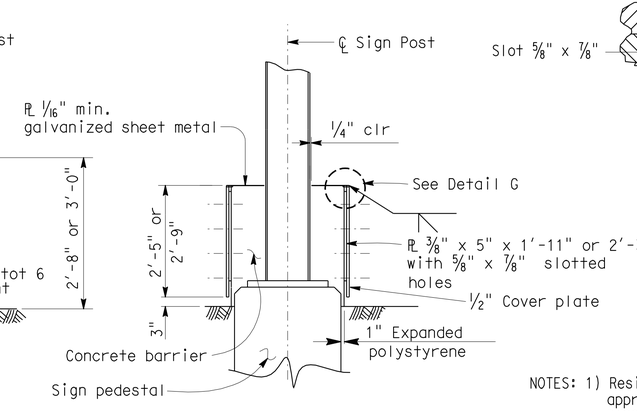

SECTION D-D

Note: Concrete Barrier Type 60 R is symmetrical about ℄ of sign post.

EXISTING UTILITY FACILITIES HAVE NOT BEEN PLOTTED ON THESE PLANS

CONSTRUCTION DETAILS
(CB TYPE 60R TRANSITION AT SIGN POST)

NO SCALE

C-60

STATE OF CALIFORNIA - DEPARTMENT OF TRANSPORTATION
Caltrans® 06-DESIGN

FUNCTIONAL SUPERVISOR: ROBERTO BANDA
CALCULATED-DESIGNED BY: PETER CHANDER
CHECKED BY: HAL KENYON
REVISED BY / DATE REVISED

LAST REVISION 05-20-11
DATE PLOTTED => 12-AUG-2011
TIME PLOTTED => 11:15

Dist	COUNTY	ROUTE	POST MILES TOTAL PROJECT	SHEET No.	TOTAL SHEETS
05	SCr	1	R0.0/10.2	65	157

REGISTERED CIVIL ENGINEER 5-20-11 DATE

6-20-11
PLANS APPROVAL DATE

REGISTERED PROFESSIONAL ENGINEER PETER A CHANDER No. 63988 Exp. 09-30-12 CIVIL STATE OF CALIFORNIA

THE STATE OF CALIFORNIA OR ITS OFFICERS OR AGENTS SHALL NOT BE RESPONSIBLE FOR THE ACCURACY OR COMPLETENESS OF SCANNED COPIES OF THIS PLAN SHEET.

NOTES:

1. TRANSVERSE EXPANSION JOINTS IN CONCRETE BARRIER SHALL MATCH ALL DECK JOINTS.
2. REMOVE ALL EXISTING CURBS AND DIKES.
3. EXISTING COMPONENTS OF CABLE BARRIER MAY BE ALTERED AND INCORPORATED IN CONCRETE BARRIERS AS INDICATED. THE EXISTING CABLE BARRIER SHALL BE REMOVED WHEN IT IS NOT ON THE CENTERLINE OF THE NEW CONCRETE BARRIER.
4. DEPTH OF DRILLED HOLE EQUALS DEPTH OF SLAB MINUS 1½", UP TO 6" MAXIMUM.
5. MINOR ADJUSTMENTS MAY BE MADE IN DOWEL SPACING TO CLEAR MAIN REINFORCEMENT.
6. TRANSITIONS TO MATCH ADJACENT "TYPE 60A" BARRIER SHALL HAVE MINIMUM FLARE OF 20:1 OFF THE STRUCTURE.
7. ℄ BARRIER IS EITHER LEFT, RIGHT, OR ON ℄ OF FREEWAY.
8. THE CONTRACTOR SHALL VERIFY ALL DEPENDENT DIMENSIONS IN THE FIELD.
9. BARRIER TO BE DOWELED ON EITHER SIDE OF DECK JOINTS. ON SKEWED HINGES, PLACE SHEET METAL DETAIL ACROSS JOINT AND ADJUST DOWELS.
10. FOR BARRIER DIMENSIONS-TYPE 60A SEE SKETCH IN Sht C-62.

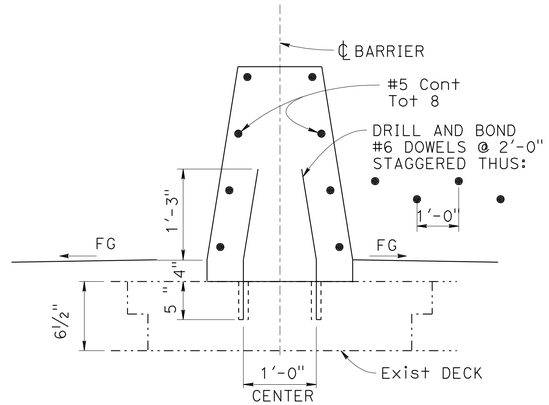

CB TYPE 60A.1

SEE NOTE 10 FOR RESPECTIVE BARRIER DIMENSIONS

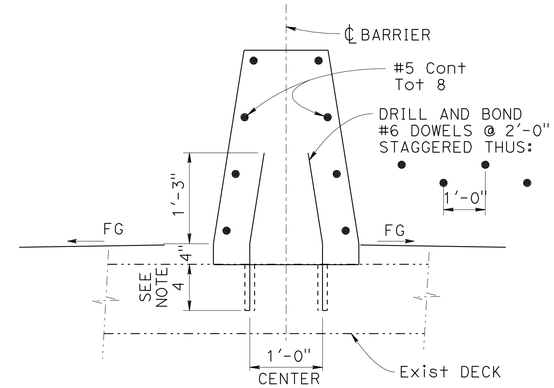

CB TYPE 60A.2

SEE NOTE 10 FOR RESPECTIVE BARRIER DIMENSIONS

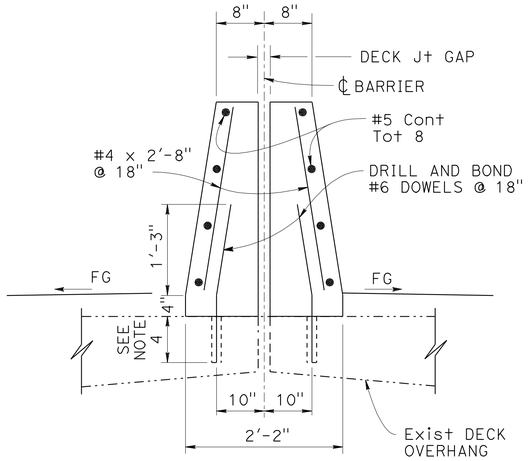

CB TYPE 60A.3

ONLY VERTICAL DIMENSION VARIES ACCORDING TO RESPECTIVE BARRIER HEIGHT. SEE NOTE 10.

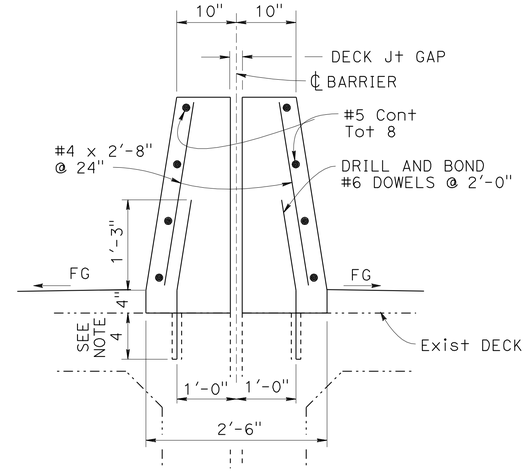

CB TYPE 60A.4

ONLY VERTICAL DIMENSION VARIES ACCORDING TO RESPECTIVE BARRIER HEIGHT. SEE NOTE 10.

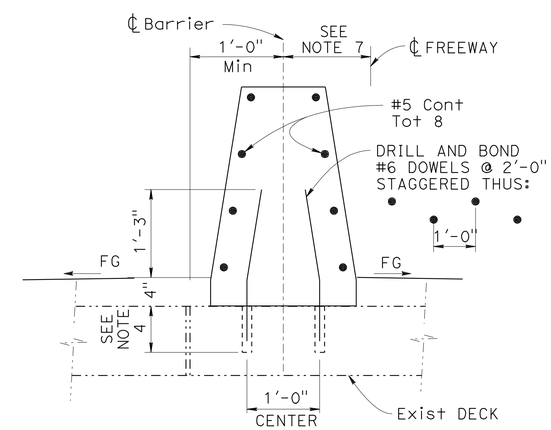

CB TYPE 60A.5

CONCRETE BARRIER (TYPE 60A MODIFIED)

(SEE Sht C-62 FOR ADDITIONAL DETAILS)

EXISTING UTILITY FACILITIES HAVE NOT BEEN PLOTTED ON THESE PLANS

CONSTRUCTION DETAILS

NO SCALE

C-61

STATE OF CALIFORNIA - DEPARTMENT OF TRANSPORTATION
Caltrans 06-DESIGN
FUNCTIONAL SUPERVISOR: ROBERTO BANDA
CALCULATED-DESIGNED BY: PETER CHANDER
CHECKED BY: HAL KENYON
REVISED BY / DATE REVISED

LAST REVISION 05-20-11
DATE PLOTTED => 12-AUG-2011
TIME PLOTTED => 11:15

Dist	COUNTY	ROUTE	POST MILES TOTAL PROJECT	SHEET No.	TOTAL SHEETS
05	SCr	1	R0.0/10.2	66	157

REGISTERED CIVIL ENGINEER 5-20-11 DATE

6-20-11
PLANS APPROVAL DATE

REGISTERED PROFESSIONAL ENGINEER PETER A CHANDER No. 63988 Exp. 09-30-12 CIVIL STATE OF CALIFORNIA

THE STATE OF CALIFORNIA OR ITS OFFICERS OR AGENTS SHALL NOT BE RESPONSIBLE FOR THE ACCURACY OR COMPLETENESS OF SCANNED COPIES OF THIS PLAN SHEET.

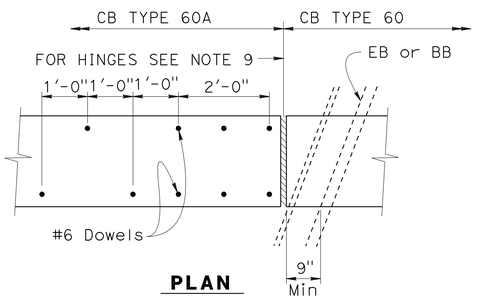

PLAN

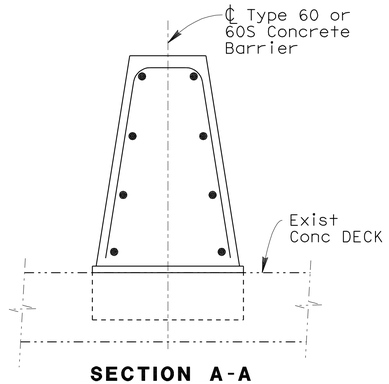

SECTION A-A

MODIFIED TYPE 60A.1

ONLY VERTICAL DIMENSION VARIES ACCORDING TO RESPECTIVE BARRIER HEIGHT. SEE NOTE 10.

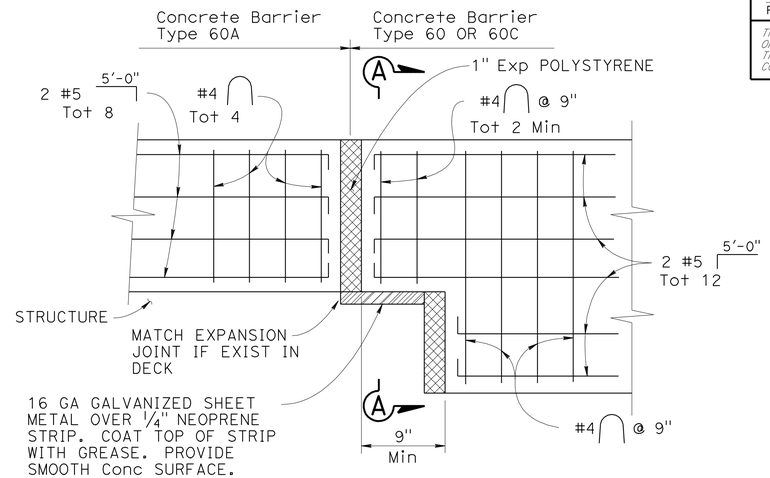

ELEVATION

CONNECTION TO STRUCTURE AT EXPANSION JOINTS

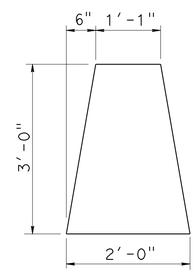

CB TYPE 60A

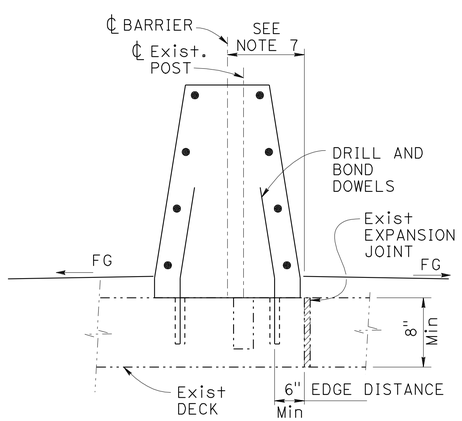

EXISTING POST HOLE

TYPE 1

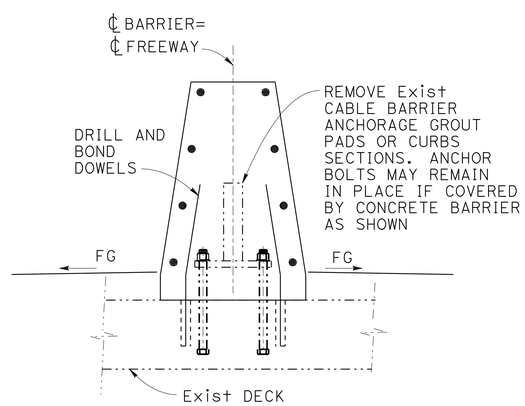

AT BOLTED ANCHORAGE PLATE

TYPE 2

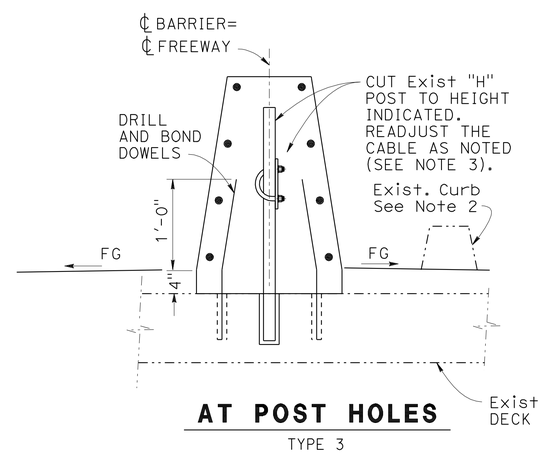

AT POST HOLES

TYPE 3

CONCRETE BARRIER (TYPE 60A MODIFIED)

(SEE Sht C-61 FOR ADDITIONAL DETAILS)

EXISTING UTILITY FACILITIES HAVE NOT BEEN PLOTTED ON THESE PLANS

CONSTRUCTION DETAILS

NO SCALE

C-62

STATE OF CALIFORNIA - DEPARTMENT OF TRANSPORTATION
Caltrans
06-DESIGN
FUNCTIONAL SUPERVISOR: ROBERTO BANDA
PETER CHANDER
HAL KENYON
REVISED BY | DATE REVISED
CALCULATED-DESIGNED BY | CHECKED BY

LAST REVISION 05-20-11 | DATE PLOTTED => 12-AUG-2011 | TIME PLOTTED => 11:15

Dist	COUNTY	ROUTE	POST MILES TOTAL PROJECT	SHEET No.	TOTAL SHEETS
05	SCr	1	R0.0/10.2	67	157

REGISTERED CIVIL ENGINEER 5-20-11 DATE

6-20-11
PLANS APPROVAL DATE

REGISTERED PROFESSIONAL ENGINEER
PETER A CHANDER
No. 63988
Exp. 09-30-12
CIVIL
STATE OF CALIFORNIA

THE STATE OF CALIFORNIA OR ITS OFFICERS OR AGENTS SHALL NOT BE RESPONSIBLE FOR THE ACCURACY OR COMPLETENESS OF SCANNED COPIES OF THIS PLAN SHEET.

LEGEND

MINOR CONCRETE (Misc CONSTRUCTION)

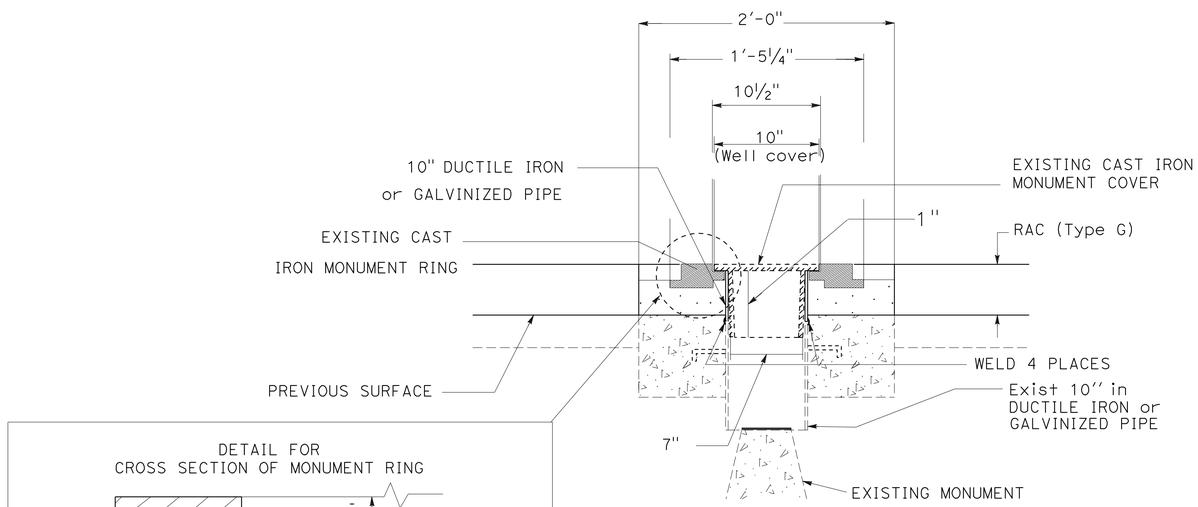

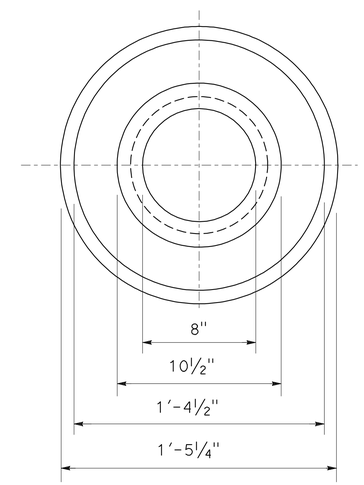

TOP VIEW OF
MONUMENT OF WELL RING

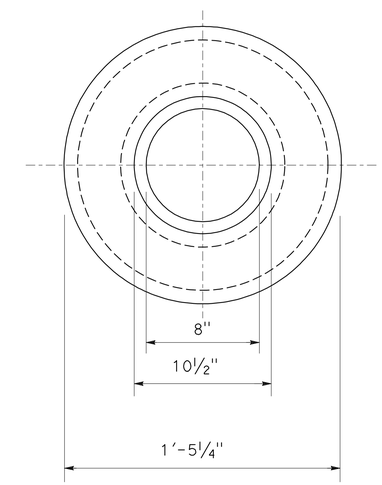

BOTTOM VIEW OF
MONUMENT OF WELL RING

* HEIGHT OF DUCTILE IRON or GALVINIZED PIPE
TO BE DETERMINED AFTER PLACING AC

EXISTING UTILITY FACILITIES HAVE NOT BEEN PLOTTED ON THESE PLANS

CONSTRUCTION DETAILS
(ADJUST MONUMENT COVER TO GRADE DETAIL)

NO SCALE

C-63

REVISED BY	DATE REVISED

CALCULATED-DESIGNED BY	CHECKED BY
PETER CHANDER	HAL KENYON

FUNCTIONAL SUPERVISOR: ROBERTO BANDA

STATE OF CALIFORNIA - DEPARTMENT OF TRANSPORTATION
Caltrans
06-DESIGN

LAST REVISION 05-20-11 | DATE PLOTTED => 12-AUG-2011 | TIME PLOTTED => 11:15

Dist	COUNTY	ROUTE	POST MILES TOTAL PROJECT	SHEET No.	TOTAL SHEETS
05	SCr	1	R0.0/10.2	68	157

REGISTERED CIVIL ENGINEER 5-20-11 DATE

6-20-11
PLANS APPROVAL DATE

REGISTERED PROFESSIONAL ENGINEER PETER A CHANDER No. 63988 Exp. 09-30-12 CIVIL STATE OF CALIFORNIA

THE STATE OF CALIFORNIA OR ITS OFFICERS OR AGENTS SHALL NOT BE RESPONSIBLE FOR THE ACCURACY OR COMPLETENESS OF SCANNED COPIES OF THIS PLAN SHEET.

NOTE:

AT LOW END OF SEAL, EXTEND BACKER ROD AND BINDER MATERIAL INTO BARRIER JOINT OPENING 3" UP FROM TOP OF PLUG SEAL SURFACE.

LEGEND

ASPHALTIC PLUG JOINT SEAL

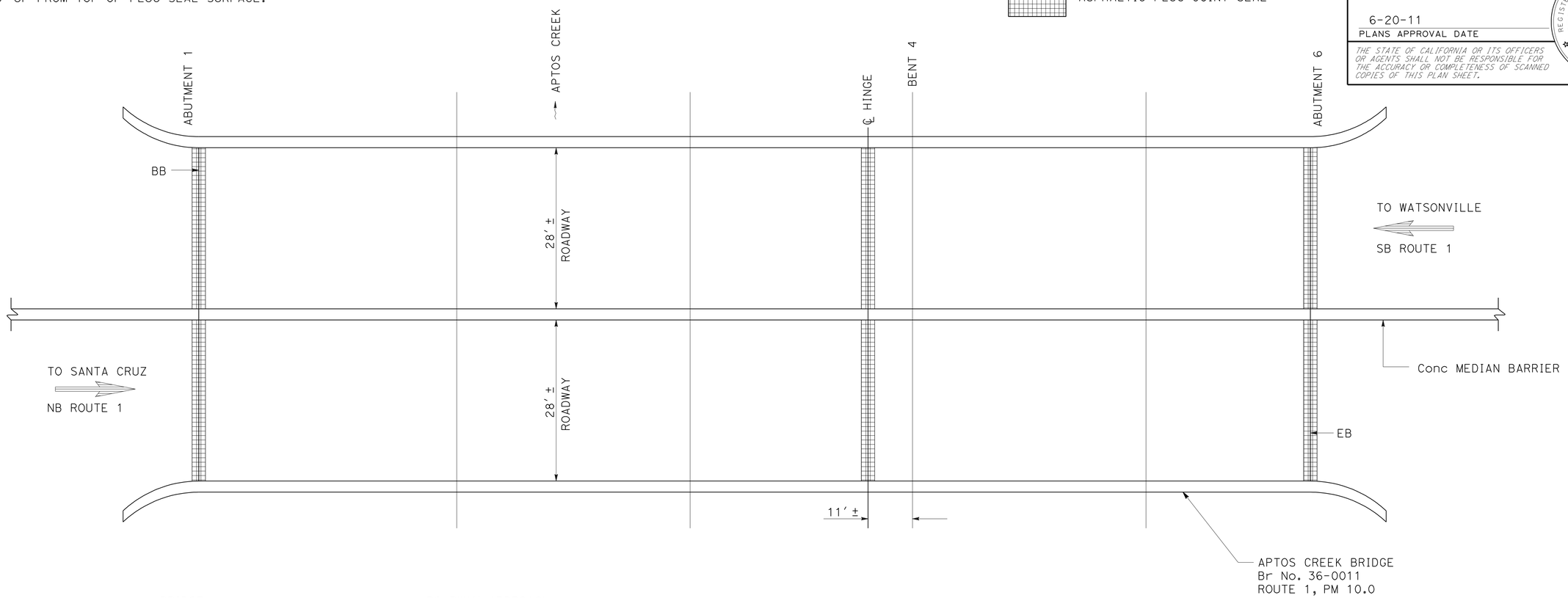

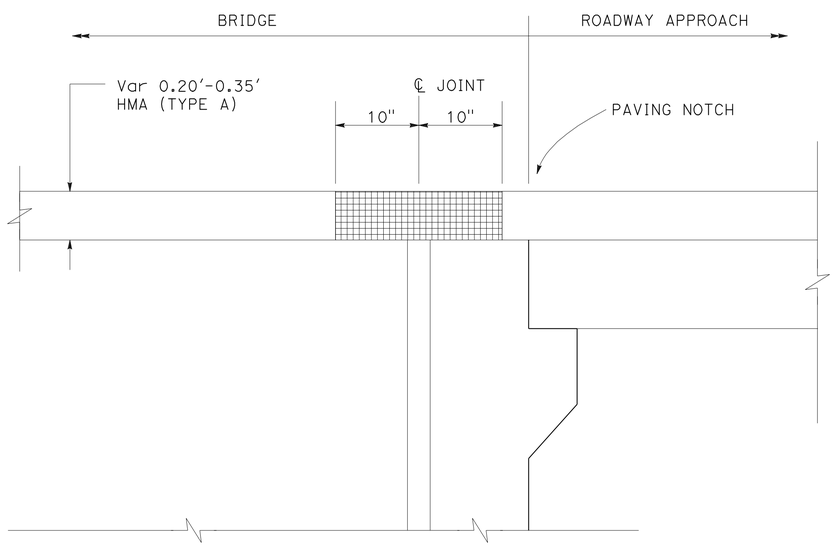

ABUTMENT WITH BACKWALL

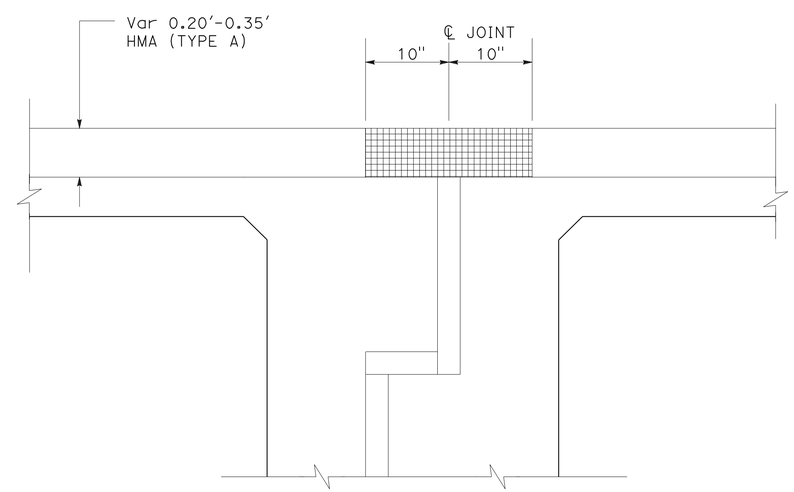

AT HINGE

EXISTING UTILITY FACILITIES HAVE NOT BEEN PLOTTED ON THESE PLANS

CONSTRUCTION DETAILS
(JOINT SEAL LOCATIONS)

NO SCALE

C-64

STATE OF CALIFORNIA - DEPARTMENT OF TRANSPORTATION
Caltrans
06-DESIGN

FUNCTIONAL SUPERVISOR: ROBERTO BANDA
CALCULATED-DESIGNED BY: PETER CHANDER
CHECKED BY: HAL KENYON
REVISED BY
DATE REVISED

LAST REVISION 05-20-11
DATE PLOTTED => 12-AUG-2011
TIME PLOTTED => 11:15

Dist	COUNTY	ROUTE	POST MILES TOTAL PROJECT	SHEET No.	TOTAL SHEETS
05	SCr	1	R0.0/10.2	69	157

REGISTERED CIVIL ENGINEER 5-20-11 DATE

6-20-11
PLANS APPROVAL DATE

REGISTERED PROFESSIONAL ENGINEER PETER A CHANDER No. 63988 Exp. 09-30-12 CIVIL STATE OF CALIFORNIA

THE STATE OF CALIFORNIA OR ITS OFFICERS OR AGENTS SHALL NOT BE RESPONSIBLE FOR THE ACCURACY OR COMPLETENESS OF SCANNED COPIES OF THIS PLAN SHEET.

NOTES:

1. SEE MANUFACTURER PLANS FOR ADDITIONAL DETAILS AND DIMENSIONS NOT SHOWN ON PLANS.
2. SYSTEM TO BE INSTALLED PER MANUFACTURER SPECIFICATIONS.
3. ONLY TIGHTEN THE CABLE ASSEMBLIES USING THE NUTS AT THE CABLE BRACKET (SEE DETAIL D). DO NOT TIGHTEN THE CABLES AT THE FRONT OF THE GROUND ANCHOR.
4. WHEN DRIVING STEEL POST, ENSURE THAT A DRIVING CAP WITH TIMBER OR PLASTIC INSERT IS USED TO PREVENT DAMAGE TO THE GALVANIZING TO THE TOP OF THE STEEL POST.

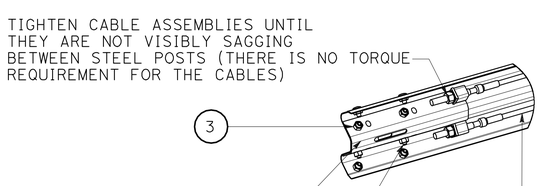

DETAIL D

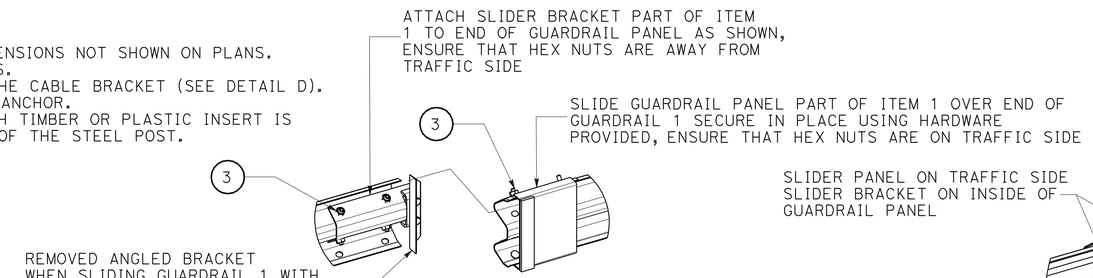

DETAIL B1

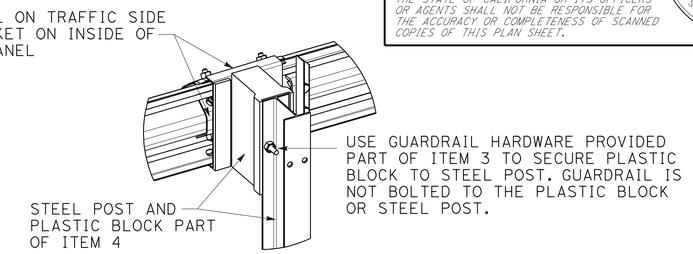

DETAIL B2

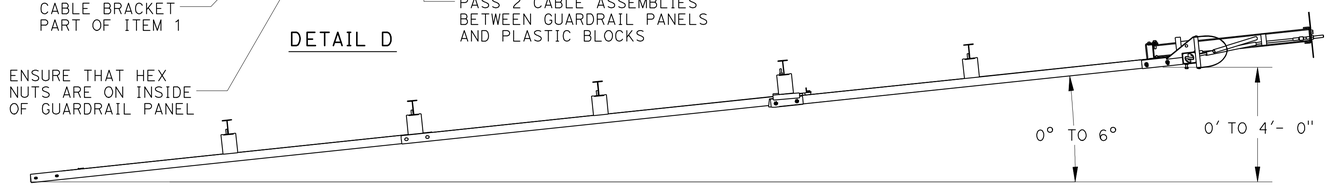

FLARED TERMINAL SYSTEM DETAIL

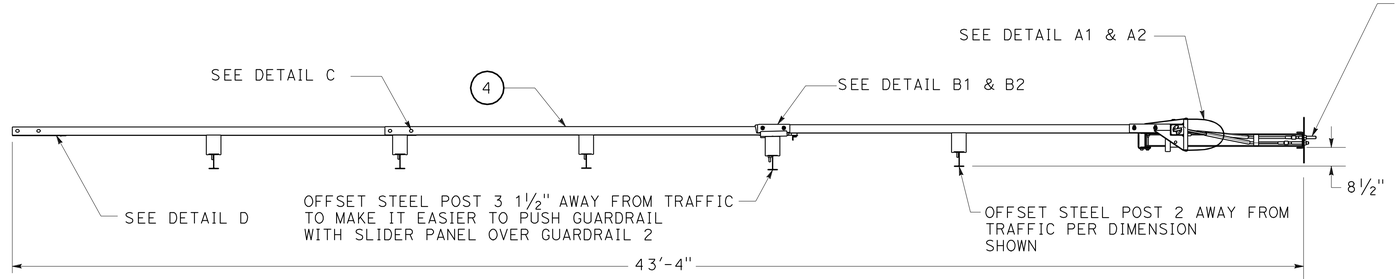

IN-LINE TERMINAL SYSTEM DETAIL

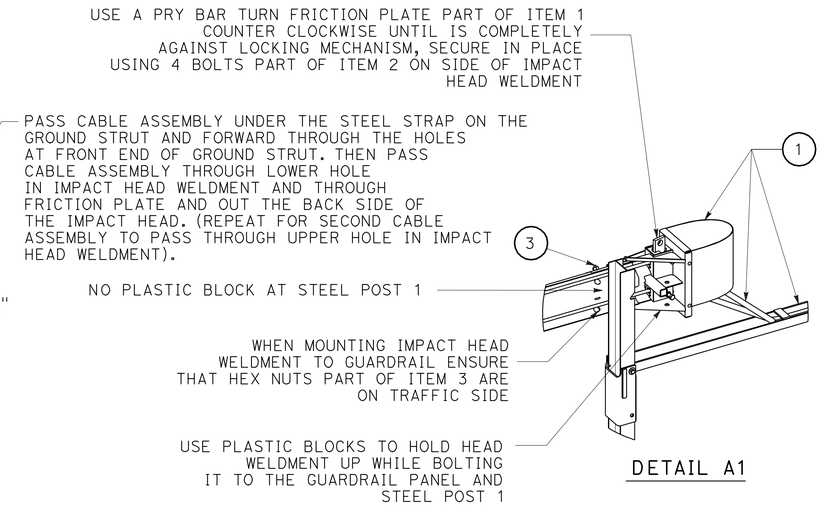

DETAIL A1

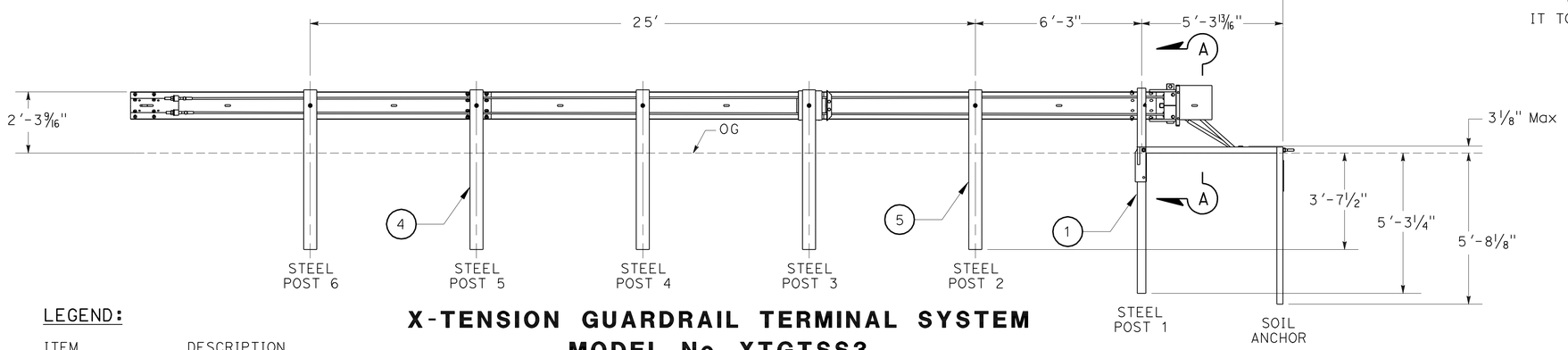

X-TENSION GUARDRAIL TERMINAL SYSTEM
MODEL No. XTGTSS3

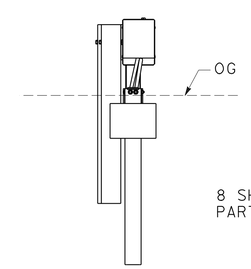

SECTION A-A

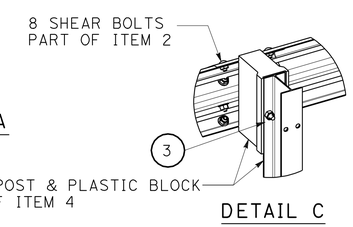

DETAIL C

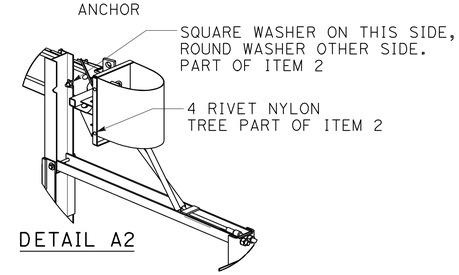

DETAIL A2

LEGEND:

ITEM	DESCRIPTION
1	X-TENSION TERMINAL COMPONENT KIT
2	X-TENSION HARDWARE KIT
3	X-TENSION SYSTEM HARDWARE KIT
4	X-TENSION GUARDRAIL COMPONENT KIT 3
5	I-BEAM POST, MIDDLE, X350

EXISTING UTILITY FACILITIES HAVE NOT BEEN PLOTTED ON THESE PLANS

CONSTRUCTION DETAILS

NO SCALE

C-65

STATE OF CALIFORNIA - DEPARTMENT OF TRANSPORTATION
06-DESIGN
Caltrans®

FUNCTIONAL SUPERVISOR: ROBERTO BANDA
CALCULATED-DESIGNED BY: PETER CHANDER
CHECKED BY: HAL KENYON
REVISED BY
DATE REVISED

LAST REVISION 05-20-11
DATE PLOTTED => 12-AUG-2011
TIME PLOTTED => 11:15

Dist	COUNTY	ROUTE	POST MILES TOTAL PROJECT	SHEET No.	TOTAL SHEETS
05	SCr	1	R0.0/10.2	70	157

REGISTERED CIVIL ENGINEER 5-20-11 DATE

6-20-11
PLANS APPROVAL DATE

REGISTERED PROFESSIONAL ENGINEER
PETER A CHANDER
No. 63988
Exp. 09-30-12
CIVIL
STATE OF CALIFORNIA

THE STATE OF CALIFORNIA OR ITS OFFICERS OR AGENTS SHALL NOT BE RESPONSIBLE FOR THE ACCURACY OR COMPLETENESS OF SCANNED COPIES OF THIS PLAN SHEET.

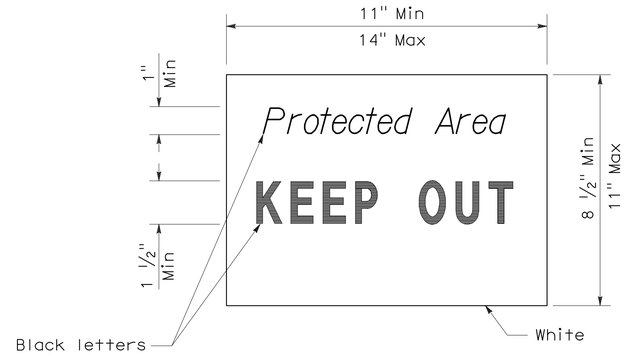

SIGN DETAIL

NOTE:

1. Temporary silt fence and temporary straw bale barrier shown for reference purposes only.

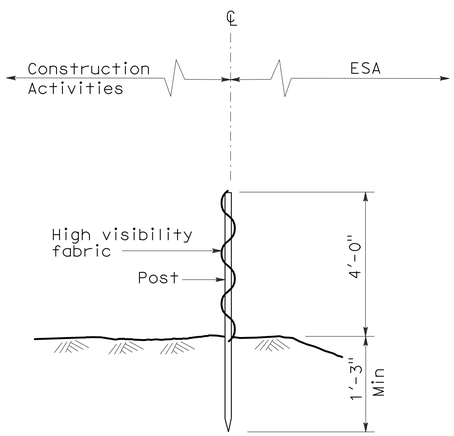

SECTION
TEMPORARY FENCE (TYPE ESA)

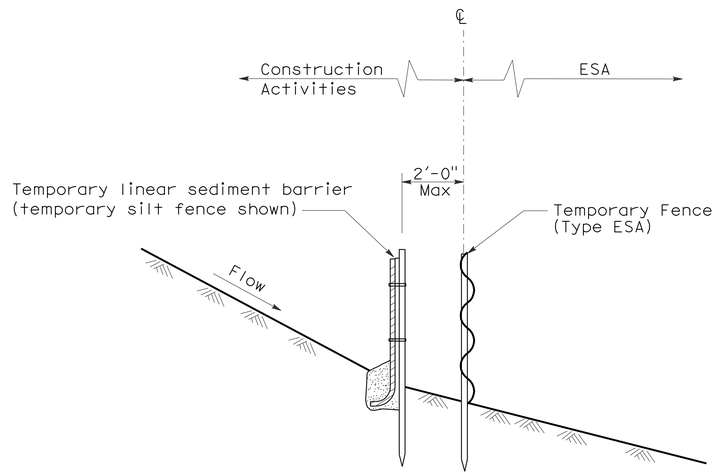

SECTION
PLACEMENT DETAIL
FOR TEMPORARY LINEAR SEDIMENT BARRIER
USED WITH TEMPORARY
FENCE (TYPE ESA)
(See Note 1)

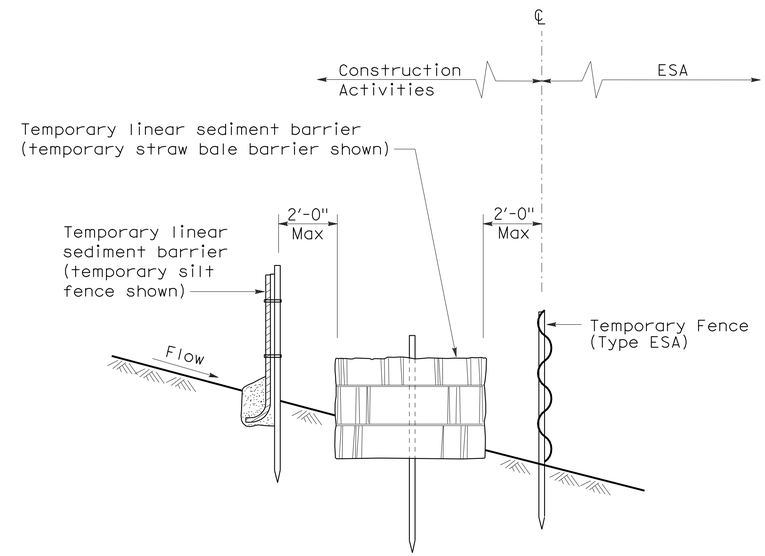

SECTION
PLACEMENT DETAIL
FOR TEMPORARY SILT FENCE
AND TEMPORARY STRAW BALE BARRIER
USED WITH TEMPORARY FENCE (TYPE ESA)
(See Note 1)

STATE OF CALIFORNIA
DEPARTMENT OF TRANSPORTATION

TEMPORARY WATER POLLUTION CONTROL DETAILS
TEMPORARY FENCE (TYPE ESA)

EXISTING UTILITY FACILITIES HAVE NOT BEEN PLOTTED ON THESE PLANS

WPCD-1

NO SCALE

STATE OF CALIFORNIA - DEPARTMENT OF TRANSPORTATION
Caltrans
06-DESIGN
FUNCTIONAL SUPERVISOR: ROBERTO BANDA
CALCULATED-DESIGNED BY: PETER CHANDER
CHECKED BY: HAL KENYON
REVISED BY
DATE REVISED

LAST REVISION 05-20-11
DATE PLOTTED => 12-AUG-2011
TIME PLOTTED => 11:16

Dist	COUNTY	ROUTE	POST MILES TOTAL PROJECT	SHEET No.	TOTAL SHEETS
05	SCr	1	R0.0/10.2	71	157

REGISTERED CIVIL ENGINEER 5-20-11 DATE

6-20-11
PLANS APPROVAL DATE

REGISTERED PROFESSIONAL ENGINEER
PETER A CHANDER
No. 63988
Exp. 09-30-12
CIVIL
STATE OF CALIFORNIA

THE STATE OF CALIFORNIA OR ITS OFFICERS OR AGENTS SHALL NOT BE RESPONSIBLE FOR THE ACCURACY OR COMPLETENESS OF SCANNED COPIES OF THIS PLAN SHEET.

NOTES:

1. SEE STANDARD PLAN T51 FOR TEMPORARY SILT FENCE.
2. DIMENSIONS MAY VARY TO FIT FIELD CONDITIONS.

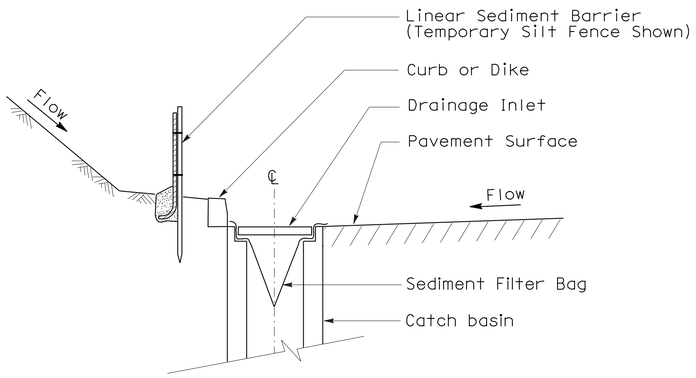

SECTION A-A

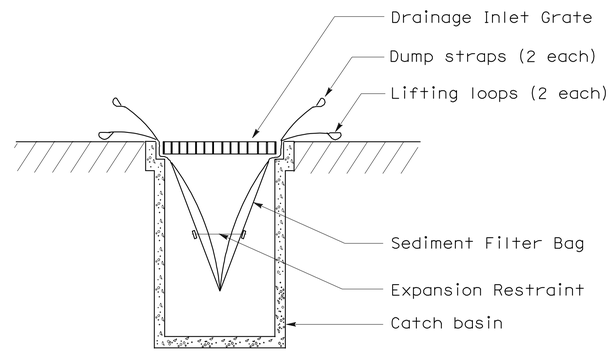

SECTION B-B

SEDIMENT FILTER BAG DETAIL

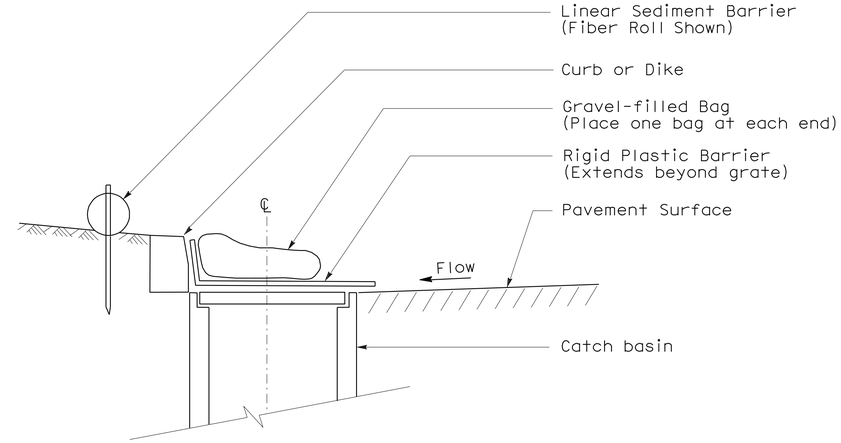

SECTION

TEMPORARY DRAINAGE
INLET PROTECTION (TYPE 6A)
(CATCH BASIN WITH GRATE)

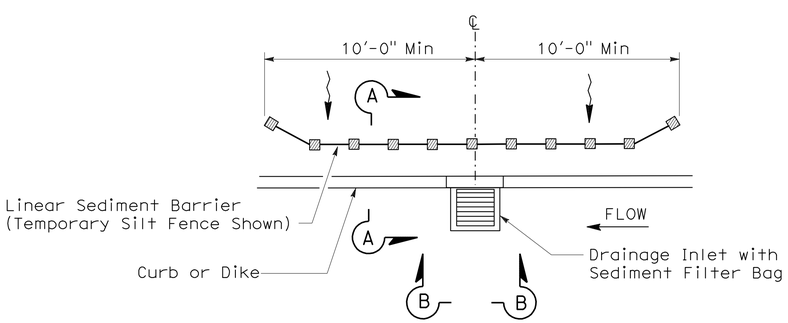

PLAN

TEMPORARY DRAINAGE
INLET PROTECTION (TYPE 5)
(SEDIMENT FILTER BAG)

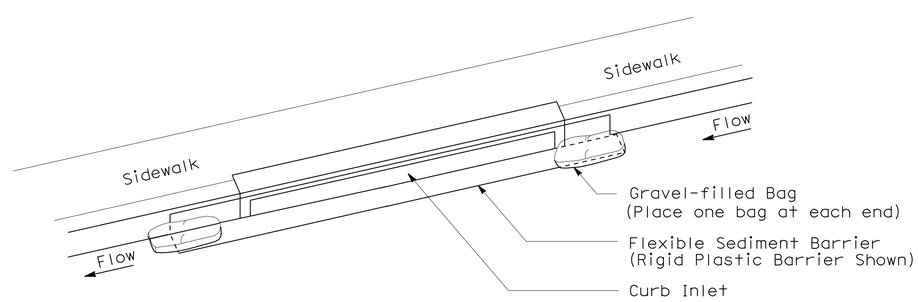

PERSPECTIVE

TEMPORARY DRAINAGE
INLET PROTECTION (TYPE 6B)
(CURB INLET WITHOUT GRATE)

STATE OF CALIFORNIA
DEPARTMENT OF TRANSPORTATION

TEMPORARY WATER POLLUTION CONTROL DETAILS (TEMPORARY DRAINAGE INLET PROTECTION)

WPCD-2

NO SCALE

EXISTING UTILITY FACILITIES HAVE NOT BEEN PLOTTED ON THESE PLANS

STATE OF CALIFORNIA - DEPARTMENT OF TRANSPORTATION
Caltrans
06-DESIGN
FUNCTIONAL SUPERVISOR: ROBERTO BANDA
CALCULATED-DESIGNED BY: PETER CHANDER
CHECKED BY: HAL KENYON
REVISED BY
DATE REVISED

LAST REVISION 05-20-11
DATE PLOTTED => 12-AUG-2011
TIME PLOTTED => 11:16

Dist	COUNTY	ROUTE	POST MILES TOTAL PROJECT	SHEET No.	TOTAL SHEETS
05	SCr	1	R0.0/10.2	72	157

REGISTERED CIVIL ENGINEER DATE 5-20-11

PLANS APPROVAL DATE 6-20-11

REGISTERED PROFESSIONAL ENGINEER PETER A CHANDER No. 63988 Exp. 09-30-12 CIVIL STATE OF CALIFORNIA

THE STATE OF CALIFORNIA OR ITS OFFICERS OR AGENTS SHALL NOT BE RESPONSIBLE FOR THE ACCURACY OR COMPLETENESS OF SCANNED COPIES OF THIS PLAN SHEET.

Temp DRAINAGE INLET PROTECTION

PM	LOCATION	DIRECTION	(N) Exist INLET TYPE
R0.22	ROUTE 1	SB	G-2
R0.22	ROUTE 1	NB	G-2
R0.32	ROUTE 1	SB	G-1
R0.32	ROUTE 1	NB	G-1
	ON RAMP ROUTE 129	SB R+	G-2
	ON RAMP ROUTE 129	SB R+	G-4
	OFF RAMP ROUTE 129	SB R+	G-2
	OFF RAMP ROUTE 129	SB R+	GO
R0.60	ROUTE 1	SB	G-2
	OFF RAMP ROUTE 129	NB R+	GO
	OFF RAMP ROUTE 129	NB R+	G-1
	OFF RAMP ROUTE 129	NB L+	G-4
R0.75	ROUTE 1	SB	G-2
	ON RAMP ROUTE 129	NB R+	G-2
	ON RAMP ROUTE 129	NB L+	G-4
	ON RAMP ROUTE 129	NB R+	G-2 Mod
	OFF RAMP ROUTE 129	NB R+	G-2
	OFF RAMP ROUTE 129	NB R+	OS Inlet
R0.89	ROUTE 1	SB	GO
	ON RAMP ROUTE 129	NB R+	GO
	ON RAMP ROUTE 129	NB L+	OS Inlet
R1.04	ROUTE 1	SB	G-2
R1.04	ROUTE 1	NB	G-2
R1.33	ROUTE 1	SB	G-2
R1.33	ROUTE 1	NB	G-2
R1.57	ROUTE 1	SB	G-1
R1.57	ROUTE 1	NB	G-1
R1.74	ROUTE 1	SB	G-1
R1.74	ROUTE 1	NB	G-2
R1.88	ROUTE 1	NB	G-2
R2.00	ROUTE 1	SB	G-2
R2.00	ROUTE 1	NB	G-2
	ON RAMP HARKINS SLOUGH Rd	SB R+	GO
R2.12	ROUTE 1	SB	GO
R2.11	ROUTE 1	NB	GO
R2.13	ROUTE 1	NB	G-2
	OFF RAMP HARKINS SLOUGH Rd	NB R+	GO
R2.35	ROUTE 1	SB	G-2
R2.34	ROUTE 1	NB	G-2
R2.41	ROUTE 1	NB	G-2
R2.56	ROUTE 1	SB	G-2
R2.57	ROUTE 1	NB	G-2
	ROUTE 1	SB	G-2
R2.79	ON RAMP ROUTE 152	NB R+	GO
R2.87	ROUTE 1	SB	G-2
R2.87	ROUTE 1	NB	G-2
R2.94	ROUTE 1	NB	G-2
	OFF RAMP ROUTE 152	SB L+	G-1
	OFF RAMP ROUTE 152	SB L+	GO
	OFF RAMP ROUTE 152	SB R+	G-5
SUBTOTAL (1)			50

(N) NOT A SEPARATE PAY ITEM, FOR INFORMATION ONLY.

Temp DRAINAGE INLET PROTECTION

PM	LOCATION	DIRECTION	(N) Exist INLET TYPE
R3.01	ROUTE 1	SB	G-2
R3.00	ROUTE 1	NB	G-2
	ON RAMP AIRPORT Blvd	SB R+	GO
	ON RAMP AIRPORT Blvd	NB L+	G-2
	ON RAMP AIRPORT Blvd	NB R+	G-2
	OFF RAMP AIRPORT Blvd	NB R+	G-2
R3.35	ROUTE 1	NB	G-2
R3.41	ROUTE 1	SB	G-2
	ON RAMP AIRPORT Blvd	NB R+	G-2
R3.61	ROUTE 1	NB	GO-Mod
R3.62	ROUTE 1	NB	GO-Mod
R3.63	ROUTE 1	NB	GO-Mod
R3.61	ROUTE 1	SB	GO
R3.62	ROUTE 1	SB	GO-Mod
R3.63	ROUTE 1	SB	GO-Mod
R3.69	ROUTE 1	SB	GO-Mod
R3.81	ROUTE 1	SB	GO
	OFF RAMP BUENA VISTA Dr	NB R+	GO_Mod
	ON RAMP BUENA VISTA Dr	SB R+	GO-Mod
	ON RAMP BUENA VISTA Dr	SB L+	GO-Mod
	ON RAMP BUENA VISTA Dr	SB L+	G-2
R4.05	ROUTE 1	SB	GO-Mod
	ON RAMP BUENA VISTA Dr	NB R+	GO-Mod
	ON RAMP BUENA VISTA Dr	NB R+	GO
	ON RAMP BUENA VISTA Dr	NB R+	GO-Mod
	ON RAMP BUENA VISTA Dr	NB R+	GO-Mod
	ON RAMP BUENA VISTA Dr	NB R+	GO_Mod
	ON RAMP BUENA VISTA Dr	NB R+	GO-Mod
R4.15	ROUTE 1	SB	GO-Mod
R4.24	ROUTE 1	SB	GO-Mod
R4.24	ROUTE 1	NB	GO-Mod
	OFF RAMP BUENA VISTA Dr	SB L+	GO-Mod
	OFF RAMP BUENA VISTA Dr	SB R+	GO-Mod
	OFF RAMP BUENA VISTA Dr	SB R+	GO-Mod
	OFF RAMP BUENA VISTA Dr	SB L+	GO-Mod
	OFF RAMP BUENA VISTA Dr	SB R+	GO-Mod
	OFF RAMP BUENA VISTA Dr	SB L+	GO-Mod
R4.34	ROUTE 1	SB	GO
R4.34	ROUTE 1	NB	GO
R4.38	ROUTE 1	NB	GO
R4.49	ROUTE 1	NB	GO-Mod
	OFF RAMP BUENA VISTA Dr	SB R+	GO-Mod
R4.55		NB	GO-Mod
R4.66		SB	GO-Mod
R4.66		NB	GO-Mod
R4.72		SB	GO
R4.89		SB	GO
R4.88		NB	GO-Mod
R4.96		SB	GO-Mod
R4.96		NB	GO-Mod
SUBTOTAL (2)			50

(N) NOT A SEPARATE PAY ITEM, FOR INFORMATION ONLY.

Temp FENCING (TYPE ESA)

Sheet No.	LOCATION	Temp FENCE (TYPE ESA)
		LF
C-21	NB R5.84	150
C-31	SB R2.68	1,000
	TOTAL	1,150

Temp FIBER ROLL

NORTHBOUND		Temp FIBER ROLL	SOUTHBOUND		Temp FIBER ROLL
FROM PM	TO PM	LF	FROM PM	TO PM	LF
R0.27	R0.32	264	R0.21	R0.50	845
R0.87	R0.99	634	R0.54	R0.74	1,056
R2.12	R2.25	686	R0.77	R0.97	1,056
R2.67	R2.83	845	R1.43	R1.46	158
R2.86	R3.02	845	R1.89	R1.94	264
R3.19	R3.28	475	R2.18	R2.31	686
R3.40	R3.73	1742	R2.40	R2.48	422
R3.90	R4.01	581	R2.74	R3.00	1,373
R4.10	R4.20	528	R3.26	R3.37	581
R5.25	R5.40	792	R3.94	R4.09	792
R6.22	R6.37	792	R4.14	R4.41	1,426
R6.64	R6.70	317	R4.62	R4.68	317
R6.97	R7.00	158	R4.83	R4.95	634
R7.50	R7.54	211	R5.09	R5.10	53
R7.72	R7.93	1109	R5.35	R5.43	422
8.93 **	8.95	106	R5.74	R5.92	950
9.51	9.59	422	R6.08	R6.35	1,162
9.65	9.72	370	R6.42	R6.58	845
9.76	9.89	686	R6.71	R6.86	792
NB RAMPS		11180	R7.01	R7.18	898
			R7.27	R7.47	1,056
			R7.54	R7.67	686
			R7.77	R7.81	211
			R7.95	R8.06	581
			8.06	8.21	792
			9.91	9.96	240
			10.07	10.08	40
			SB RAMPS		5,294
NB SUBTOTAL		22,743	SB SUBTOTAL		23,632
			TOTAL		46,375

** POST MILE EQUATION R8.26 = 8.06

TEMPORARY WATER POLLUTION CONTROL QUANTITIES
WPCQ-1

STATE OF CALIFORNIA - DEPARTMENT OF TRANSPORTATION
Caltrans 06-DESIGN

FUNCTIONAL SUPERVISOR: ROBERTO BANDA
CALCULATED-DESIGNED BY: PETER CHANDER
CHECKED BY: HAL KENYON
REVISED BY
DATE REVISED

LAST REVISION 05-20-11 | DATE PLOTTED => 12-AUG-2011 | TIME PLOTTED => 11:16

Peter Chandler 5-20-11

6-20-11

Temp DRAINAGE INLET PROTECTION

PM	LOCATION	DIRECTION	(N) Exist INLET TYPE
R5.04	ROUTE 1	SB	GO-Mod
R5.04	ROUTE 1	NB	GO-Mod
R5.14	ROUTE 1	SB	GO-Mod
R5.14	ROUTE 1	NB	GO
R5.22	ROUTE 1	SB	GO
R5.22	ROUTE 1	NB	GO-Mod
R5.31	ROUTE 1	NB	GO-Mod
R5.32	ROUTE 1	SB	GO
R5.39	ROUTE 1	SB	GO
R5.45	ROUTE 1	SB	GO
R5.51	ROUTE 1	NB	GO-Mod
R5.57	ROUTE 1	NB	GO-Mod
R5.82	ROUTE 1	SB	GO
	ON RAMP VISTA PT REST AREA	SB R†	GO
	ON RAMP VISTA PT REST AREA	SB L†	GO
	OFF RAMP VISTA PT REST AREA	SB R†	GO
	ON RAMP VISTA PT REST AREA	SB L†	GO
R5.91	ROUTE 1	SB	GO
	ON RAMP VISTA PT REST AREA	SB R†	GO
R5.79	ROUTE 1	NB	GO-Mod
R5.91	ROUTE 1	NB	GO
R5.99	ROUTE 1	NB	GO-Mod
	ON RAMP VISTA PT REST AREA	SB L†	GO-Mod
R6.10	ROUTE 1	SB	GO
R6.16	ROUTE 1	NB	GO-Mod
R6.34	ON RAMP MAR MONTE AVE	SB R†	GO-Mod
	ON RAMP MAR MONTE AVE	SB R†	GO
	ON RAMP MAR MONTE AVE	SB L†	GO
	OFF RAMP MAR MONTE AVE	SB R†	GO
	OFF RAMP MAR MONTE AVE	SB R†	GO
	OFF RAMP MAR MONTE AVE	SB L†	GO-Mod
R6.34	ROUTE 1	NB	GO-Mod
R6.42	ROUTE 1	NB	G-2
	OFF RAMP MAR MONTE AVE	NB R†	G-2
	OFF RAMP MAR MONTE AVE	NB R†	G-2
	OFF RAMP MAR MONTE AVE	NB R†	G-2
R6.62	ROUTE 1	NB	GO-Mod
	OFF RAMP MAR MONTE AVE	NB R†	GO
	OFF RAMP MAR MONTE AVE	NB R†	GO-Mod
	OFF RAMP MAR MONTE AVE	NB R†	GO
	OFF RAMP MAR MONTE AVE	NB L†	GO-Mod
	ON RAMP MAR MONTE AVE	NB R†	G-2
	ON RAMP MAR MONTE AVE	NB R†	GO
	ON RAMP MAR MONTE AVE	NB R†	GO-Mod
R6.76		SB	GO
R6.74		NB	GO-Mod
R6.85		NB	GO-Mod
R7.00		SB	GO
R7.02		SB	GO-Mod
R7.03		SB	GO-Mod
SUBTOTAL (3)			50

(N) NOT A SEPARATE PAY ITEM, FOR INFORMATION ONLY.

Temp DRAINAGE INLET PROTECTION

PM	LOCATION	DIRECTION	(N) Exist INLET TYPE
R7.10	ROUTE 1	SB	GO-Mod
R7.16	ROUTE 1	SB	GO
R7.05	ROUTE 1	NB	G-2
R7.08	ROUTE 1	NB	G-2
	ON RAMP MAR MONTE AVE	NB	GO
	ON RAMP MAR MONTE AVE	NB	GO
	ON RAMP MAR MONTE AVE	NB	GO
	ON RAMP MAR MONTE AVE	NB	GO-Mod
R7.23	ROUTE 1	SB	GO
R7.27	ROUTE 1	SB	GO-Mod
R7.37	ROUTE 1	SB	GO-Mod
	ON RAMP LARKIN VALLEY RD	SB L†	GO
R7.23	ROUTE 1	NB	GO-Mod
R7.28	ROUTE 1	NB	GO-Mod
R7.34	ROUTE 1	NB	GO-Mod
R7.41	ROUTE 1	NB	GO-Mod
R7.46	ROUTE 1	NB	GO
	ON RAMP LARKIN VALLEY RD	SB R†	GO
	ON RAMP LARKIN VALLEY RD	SB L†	GO
	ON RAMP LARKIN VALLEY RD	SB R†	GO
	ON RAMP LARKIN VALLEY RD	SB L†	GO
R7.61	ROUTE 1	SB	GO
	ON RAMP LARKIN VALLEY RD	SB R†	GO
	ON RAMP LARKIN VALLEY RD	SB L†	GO-Mod
	ON RAMP LARKIN VALLEY RD	SB L†	GO
R7.67	ROUTE 1	SB	GO-Mod
	ON RAMP LARKIN VALLEY RD	SB L†	GO
	ON RAMP LARKIN VALLEY RD	SB L†	GO
	ON RAMP LARKIN VALLEY RD	SB L†	GO-Mod
	ON RAMP LARKIN VALLEY RD	SB R†	GO-Mod
	ON RAMP LARKIN VALLEY RD	SB L†	GO-Mod
R7.65	ROUTE 1	NB	GO-Mod
R7.74	ROUTE 1	SB	GO-Mod
	ON RAMP LARKIN VALLEY RD	SB R†	GO
R7.95	ROUTE 1	SB	GO-Mod
	OFF RAMP LARKIN VALLEY RD	NB R†	GO
	OFF RAMP LARKIN VALLEY RD	NB L†	GO
	OFF RAMP LARKIN VALLEY RD	NB R†	GO
	ON RAMP LARKIN VALLEY RD	NB R†	GO-Mod
	ON RAMP LARKIN VALLEY RD	NB R†	GO
	ON RAMP LARKIN VALLEY RD	NB L†	G-1
	ON RAMP LARKIN VALLEY RD	NB L†	GO
	ON RAMP LARKIN VALLEY RD	NB R†	GO
	ON RAMP LARKIN VALLEY RD	NB R†	GO
8.17	ROUTE 1	SB	GO-Mod
8.27	ROUTE 1	SB	GO-Mod
8.16	ROUTE 1	NB	GO-Mod
8.20	ROUTE 1	NB	GO
8.26	ROUTE 1	NB	GO-Mod
8.33	ROUTE 1	NB	GO
SUBTOTAL (4)			50

(N) NOT A SEPARATE PAY ITEM, FOR INFORMATION ONLY.

Temp DRAINAGE INLET PROTECTION

PM	LOCATION	DIRECTION	(N) Exist INLET TYPE
8.37	ROUTE 1	NB	GO-Mod
8.16	ROUTE 1	NB	G-1
8.36	ROUTE 1	SB	G-1
8.20	ON RAMP FREEDOM BLVD	SB R†	G-2
8.20	ROUTE 1	NB	G-1
8.26	ROUTE 1	NB	G-2
8.33	ROUTE 1	NB	G-1
8.37	ROUTE 1	NB	GO-Mod
	ON RAMP FREEDOM BLVD	NB R†	GO-Mod
	ON RAMP FREEDOM BLVD	SB R†	GO-Mod
	ON RAMP FREEDOM BLVD	SB R†	GO-Mod
	ON RAMP FREEDOM BLVD	SB R†	GO-Mod
8.33	ROUTE 1	SB	G-1
8.36	ROUTE 1	SB	G-2
8.35	ROUTE 1	NB	GO-Mod
8.47	ROUTE 1	NB	GO-Mod
	OFF RAMP FREEDOM BLVD	NB R†	GO
	OFF RAMP FREEDOM BLVD	NB R†	GO
	ON RAMP FREEDOM BLVD	NB R†	G-2
	ON RAMP FREEDOM BLVD	NB R†	GO-Mod
	OFF RAMP FREEDOM BLVD	SB R†	G-2
8.71	ROUTE 1	SB	G-2
8.62	ROUTE 1	SB	G-1
	ON RAMP FREEDOM BLVD	NB R†	G-2
	ON RAMP FREEDOM BLVD	NB R†	G-1
8.92	ROUTE 1	SB	G-2
	ON RAMP RIO DEL MAR BLVD	SB R†	G-2
9.02	ROUTE 1	SB	G-4
9.03	ROUTE 1	SB	G-4
9.03	ROUTE 1	SB	G-2
	OFF RAMP RIO DEL MAR BLVD	NB R†	G-1
	ON RAMP RIO DEL MAR BLVD	SB R†	G-2
	ON RAMP RIO DEL MAR BLVD	SB L†	G-1
	OFF RAMP RIO DEL MAR BLVD	SB R†	G-2
	OFF RAMP RIO DEL MAR BLVD	SB R†	G-1
9.23	ROUTE 1	NB	G-2
9.27	ROUTE 1	NB	G-2
9.27	ROUTE 1	NB	G-4
	ON RAMP RIO DEL MAR BLVD	NB R†	G-2
SUBTOTAL			39
SUBTOTAL (1) Sh† WPCQ-1			50
SUBTOTAL (2) Sh† WPCQ-1			50
SUBTOTAL (3)			50
SUBTOTAL (4)			50
TOTAL			239

(N) NOT A SEPARATE PAY ITEM, FOR INFORMATION ONLY.

TEMPORARY WATER POLLUTION CONTROL QUANTITIES
WPCQ-2

Dist	COUNTY	ROUTE	POST MILES TOTAL PROJECT	SHEET No.	TOTAL SHEETS
05	SCr	1	R0.0/10.2	74	157

REGISTERED CIVIL ENGINEER 5-20-11 DATE

6-20-11
PLANS APPROVAL DATE

REGISTERED PROFESSIONAL ENGINEER PETER A CHANDER No. 63988 Exp. 09-30-12 CIVIL STATE OF CALIFORNIA

THE STATE OF CALIFORNIA OR ITS OFFICERS OR AGENTS SHALL NOT BE RESPONSIBLE FOR THE ACCURACY OR COMPLETENESS OF SCANNED COPIES OF THIS PLAN SHEET.

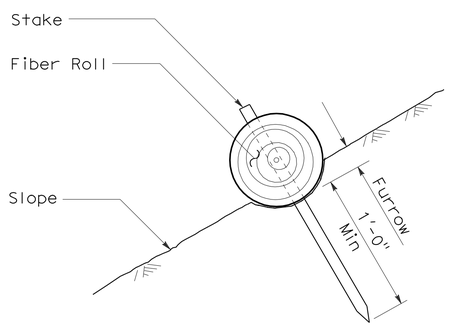

SECTION

FIBER ROLL (TYPE 1)

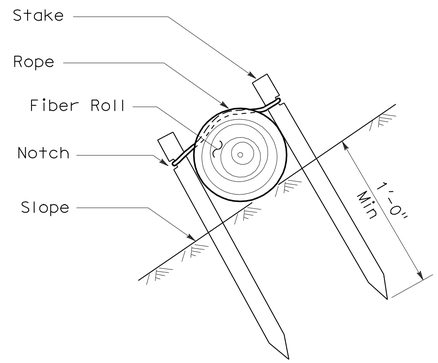

SECTION

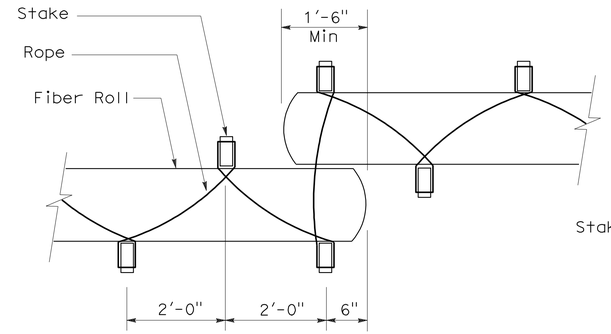

PLAN

FIBER ROLL (TYPE 2)

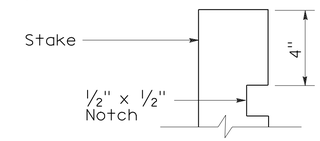

ELEVATION

STAKE NOTCH DETAIL

NOTES:

1. FIBER ROLL SPACING VARIES DEPENDING UPON SLOPE INCLINATION.
2. INSTALLATIONS SHOWN IN THE PERSPECTIVES ARE FOR SLOPE INCLINATION OF 10:1 AND STEEPER.

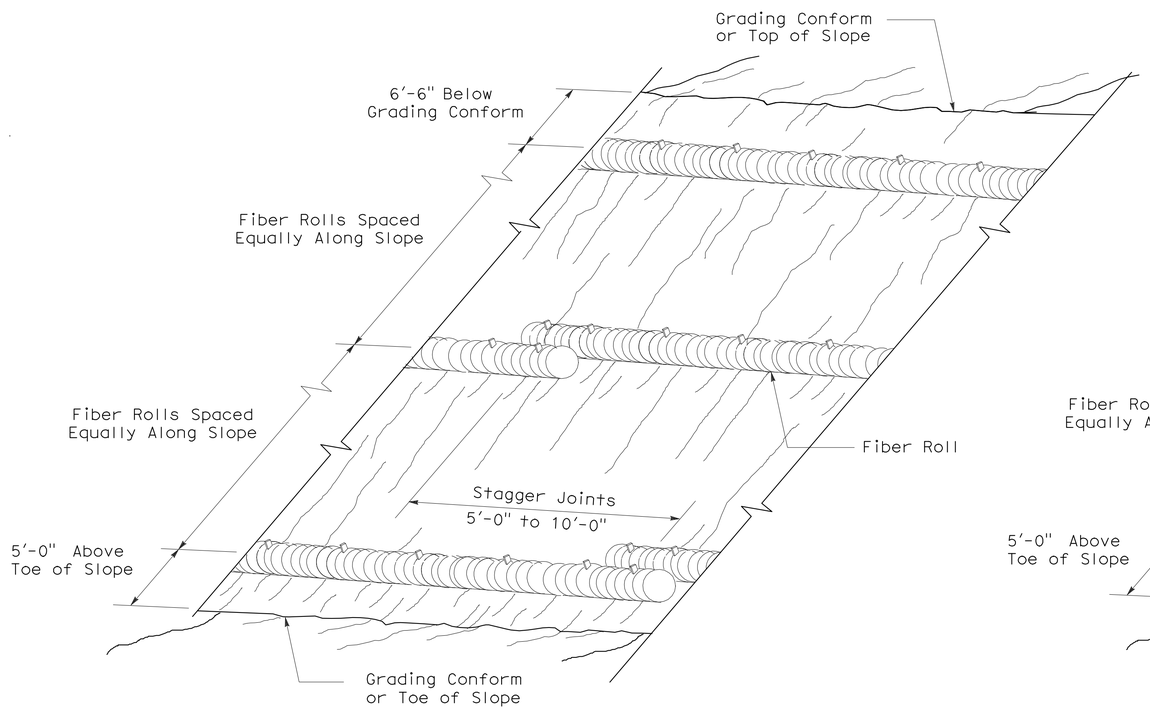

PERSPECTIVE

FIBER ROLL (TYPE 1)

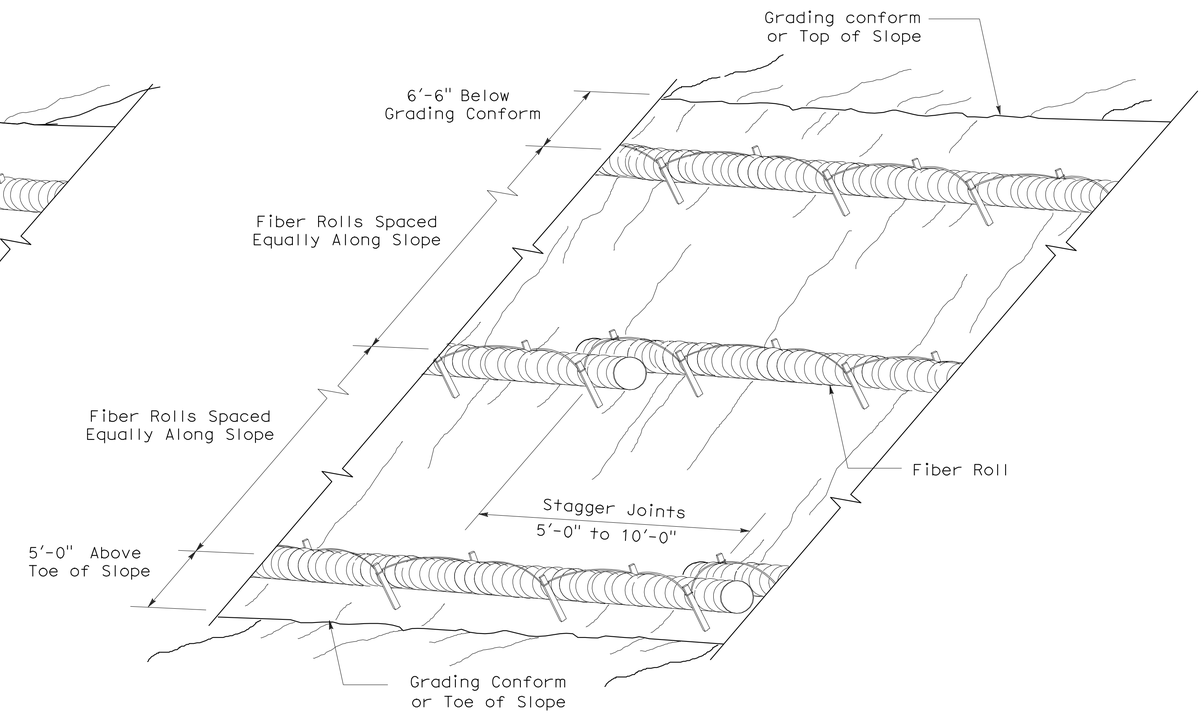

PERSPECTIVE

FIBER ROLL (TYPE 2)

EROSION CONTROL DETAILS
(FIBER ROLL)

EXISTING UTILITY FACILITIES HAVE NOT BEEN PLOTTED ON THESE PLANS

NO SCALE

ECD-1

STATE OF CALIFORNIA - DEPARTMENT OF TRANSPORTATION
Caltrans®
06-DESIGN

FUNCTIONAL SUPERVISOR: ROBERTO BANDA
CALCULATED-DESIGNED BY: PETER CHANDER
CHECKED BY: HAL KENYON
REVISED BY
DATE REVISED

LAST REVISION 05-20-11
DATE PLOTTED => 12-AUG-2011
TIME PLOTTED => 11:16

Dist	COUNTY	ROUTE	POST MILES TOTAL PROJECT	SHEET No.	TOTAL SHEETS
05	SCr	1	R0.0/10.2	75	157

REGISTERED CIVIL ENGINEER 5-20-11 DATE

6-20-11
PLANS APPROVAL DATE

REGISTERED PROFESSIONAL ENGINEER
PETER A CHANDER
No. 63988
Exp. 09-30-12
CIVIL
STATE OF CALIFORNIA

THE STATE OF CALIFORNIA OR ITS OFFICERS OR AGENTS SHALL NOT BE RESPONSIBLE FOR THE ACCURACY OR COMPLETENESS OF SCANNED COPIES OF THIS PLAN SHEET.

EROSION CONTROL

DIRECTION	FROM PM	TO PM	SIDE	FIBER ROLLS LF	EROSION CONTROL (COMPOST BLANKET) CY	(N) SEED LB
NB1 & Rte 129 E EXIT RAMP	0.33	0.51	R+	970	43.1	12.9
NB1	0.65	0.7	R+	264	11.7	3.5
NB1	1.19	1.34	R+	792	35.2	10.6
NB1	5.1	5.15	R+	264	11.7	3.5
NB1	5.9	5.96	R+	317	14.1	4.2
NB1	6.09	6.1	R+	53	2.3	0.7
NB1	7.4	7.45	R+	264	11.7	3.5
SB1	0.33	0.46	R+	686	30.5	9.2
SB1	3.44	3.46	R+	106	4.7	1.4
SB1	6.06	6.13	R+	370	16.4	4.9
SB1	6.87	7.01	R+	739	32.9	9.9
SB1	7.15	7.2	R+	264	11.7	3.5
NB1 ON RAMP FROM MAR MONTE Ave			R+	725	32.2	9.7
NB1 ON RAMP FROM LARKIN VALLEY Rd			R+	750	33.3	10.0
NB1 OFF RAMP TO FREEDOM Blvd			R+	580	25.8	7.7
NB1 ON RAMP FROM FREEDOM Blvd			R+	100	4.4	1.3
NB1 OFF RAMP TO RIO DEL MAR Blvd			R+	400	17.8	5.3
SB1 OFF RAMP TO FREEDOM Blvd			R+	700	31.1	9.3
SB1 OFF RAMP TO LARKIN VALLEY Rd			R+	150	6.7	2.0
SB1 ON RAMP FROM LARKIN VALLEY Rd			R+	300	13.3	4.0
SB1 ON RAMP FROM MAR MONTE Ave			R+	265	11.8	3.5
TOTAL				9059	402.4	

EROSION CONTROL QUANTITIES

ECQ-1

REVISED BY | DATE REVISED
HAL KENYON | PETER CHANDER
CALCULATED-DESIGNED BY | CHECKED BY
FUNCTIONAL SUPERVISOR: ROBERTO BANDA

STATE OF CALIFORNIA - DEPARTMENT OF TRANSPORTATION
Caltrans
06-DESIGN

LAST REVISION 05-20-11 | DATE PLOTTED => 12-AUG-2011 | TIME PLOTTED => 11:17

Dist	COUNTY	ROUTE	POST MILES TOTAL PROJECT	SHEET No.	TOTAL SHEETS
05	SCr	1	R0.0/10.2	76	157

REGISTERED CIVIL ENGINEER 5-20-11 DATE

6-20-11
PLANS APPROVAL DATE

REGISTERED PROFESSIONAL ENGINEER PETER A CHANDER No. 63988 Exp. 09-30-12 CIVIL STATE OF CALIFORNIA

THE STATE OF CALIFORNIA OR ITS OFFICERS OR AGENTS SHALL NOT BE RESPONSIBLE FOR THE ACCURACY OR COMPLETENESS OF SCANNED COPIES OF THIS PLAN SHEET.

NOTES:

1. LENGTH AND ELEVATION SHOWN FOR DRAINAGE UNITS ARE APPROXIMATE. CONTRACTOR SHALL VERIFY FIELD CONDITIONS BEFORE FABRICATING DRAINAGE UNITS

LEGEND

* LOCATION OF DRAINAGE UNIT "c" MAY BE ADJUSTED ±3′ SO AS TO PLACE UNIT "d" BETWEEN MBGR POSTS

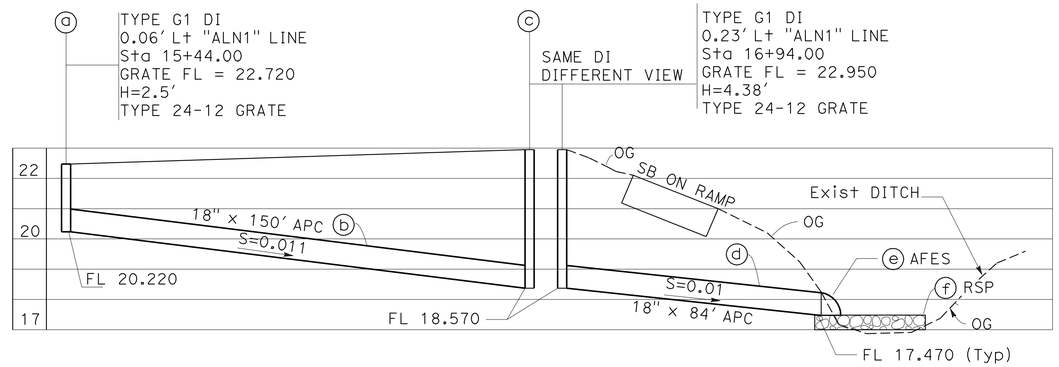

DRAINAGE SYSTEM No. 1
PROFILE

SCALE: Horiz 1:300
Vert 1:30

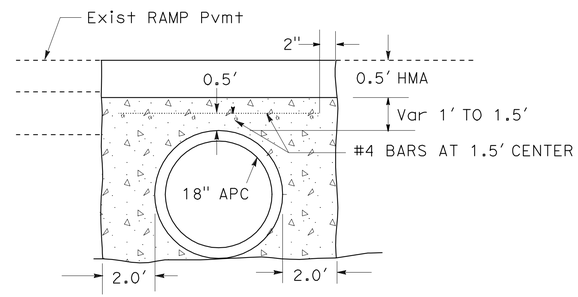

SECTION B-B
(UNDER RAMP Pvmt ONLY)

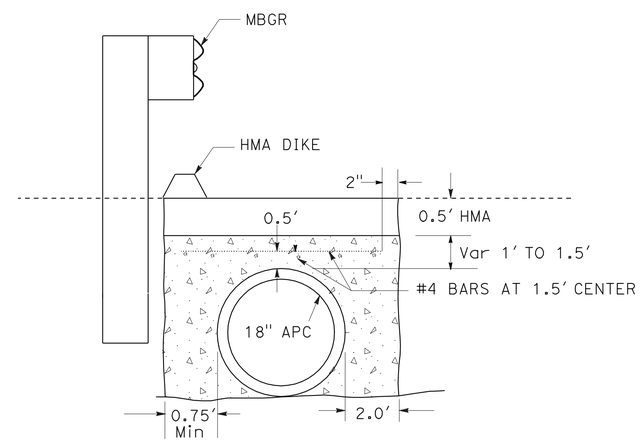

SECTION A-A
(FULL LENGTH OF Culv)

MINOR CONCRETE (BACKFILL)

NO SCALE

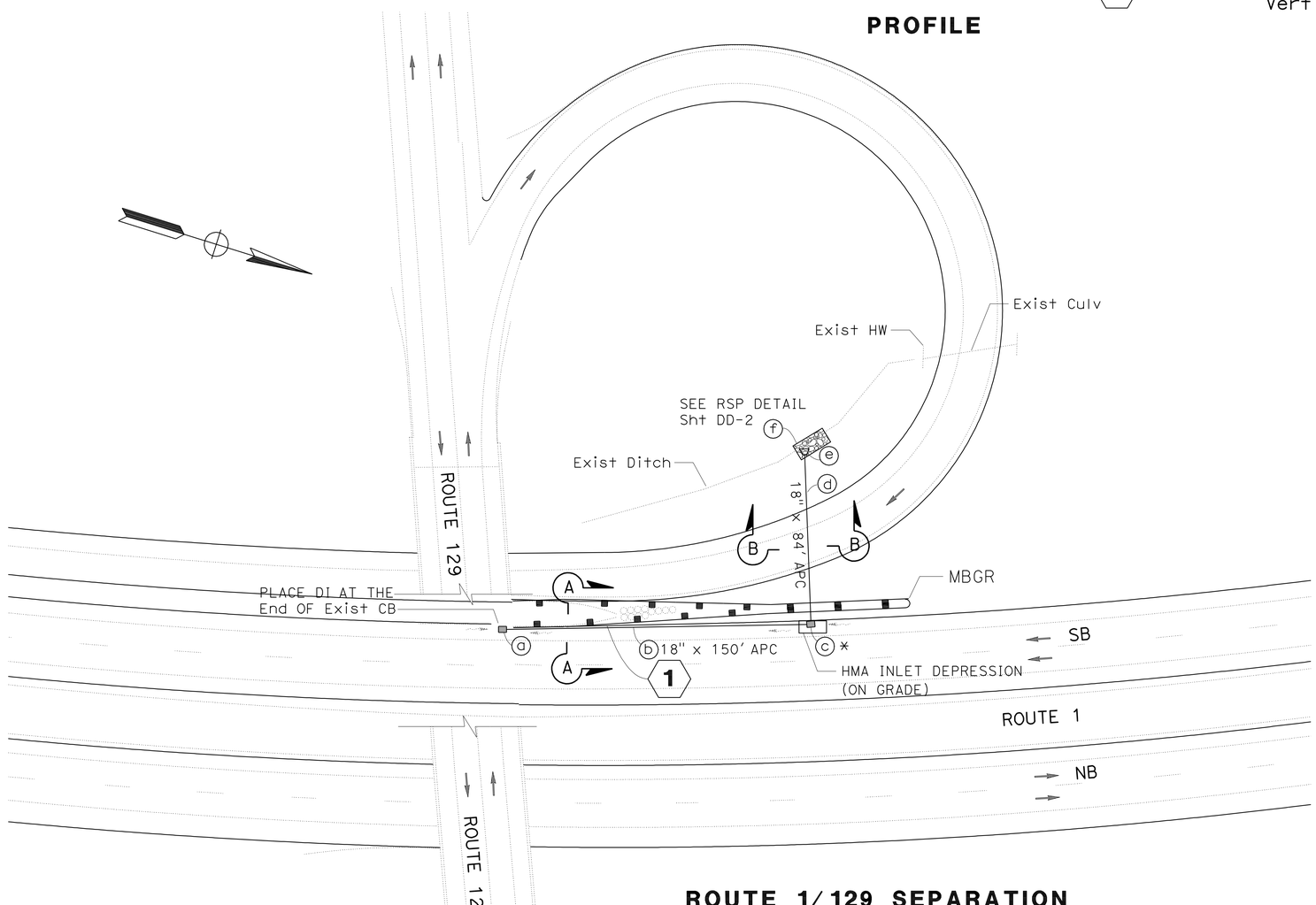

ROUTE 1/129 SEPARATION

NO SCALE

EXISTING UTILITY FACILITIES HAVE NOT BEEN PLOTTED ON THESE PLANS

DRAINAGE DETAILS

SCALE AS SHOWN **DD-1**

REVISED BY | DATE REVISED
PETER CHANDER | HAL KENYON
CALCULATED-DESIGNED BY | CHECKED BY
FUNCTIONAL SUPERVISOR | ROBERTO BANDA
STATE OF CALIFORNIA - DEPARTMENT OF TRANSPORTATION | 06-DESIGN
Caltrans

LAST REVISION 05-20-11 | DATE PLOTTED => 12-AUG-2011 | TIME PLOTTED => 11:17

Dist	COUNTY	ROUTE	POST MILES TOTAL PROJECT	SHEET No.	TOTAL SHEETS
05	SCr	1	R0.0/10.2	77	157

REGISTERED CIVIL ENGINEER 5-20-11 DATE

6-20-11
PLANS APPROVAL DATE

REGISTERED PROFESSIONAL ENGINEER PETER A CHANDER No. 63988 Exp. 09-30-12 CIVIL STATE OF CALIFORNIA

THE STATE OF CALIFORNIA OR ITS OFFICERS OR AGENTS SHALL NOT BE RESPONSIBLE FOR THE ACCURACY OR COMPLETENESS OF SCANNED COPIES OF THIS PLAN SHEET.

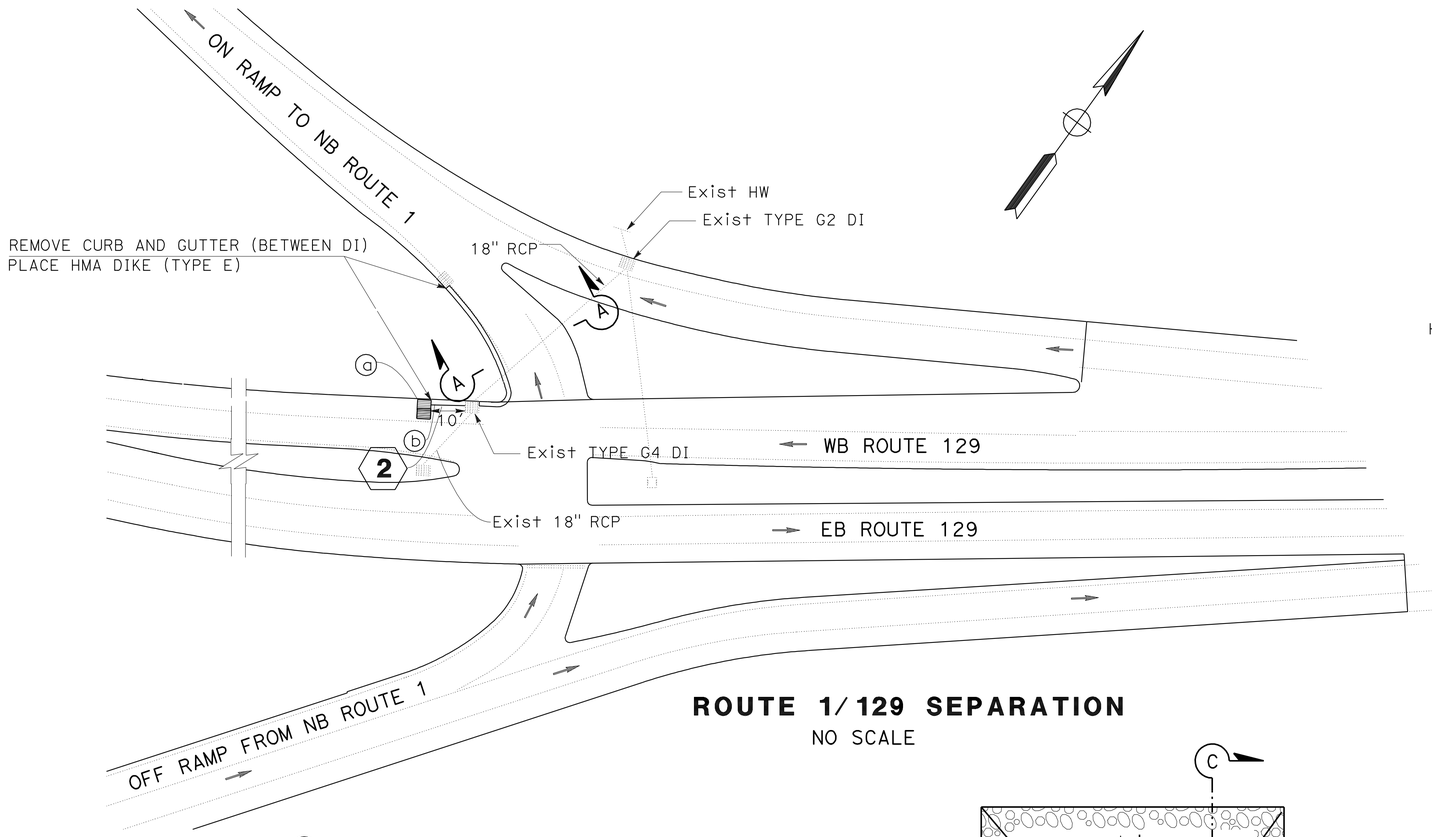

ROUTE 1/129 SEPARATION

NO SCALE

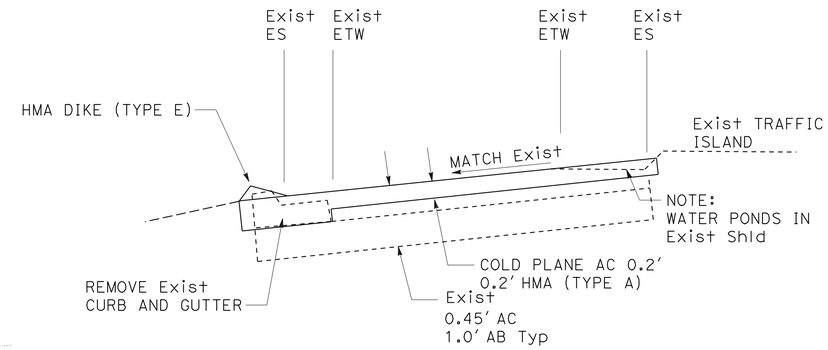

SECTION A-A

NOTES: (FOR ROCK SLOPE PROTECTION DETAIL)

1. "d" REPRESENTS THE OUTSIDE DIAMETER OF THE PIPE CONNECTED TO THE FLARED-END SECTION. FOR OVERSIDE DRAIN USE d = 12".
2. THE ROCK MATERIAL AND PLACEMENT METHOD SHALL CONFORM TO THE GRADING "BACKING NO 1" FOR METHOD "B"
3. "w" REPRESENTS THE WIDTH OF THE AFES FOR DRAINAGE UNIT f OF DRAINAGE SYSTEM No.1 ON Sht DD-1. FOR OVERSIDE DRAIN USE w = 24".

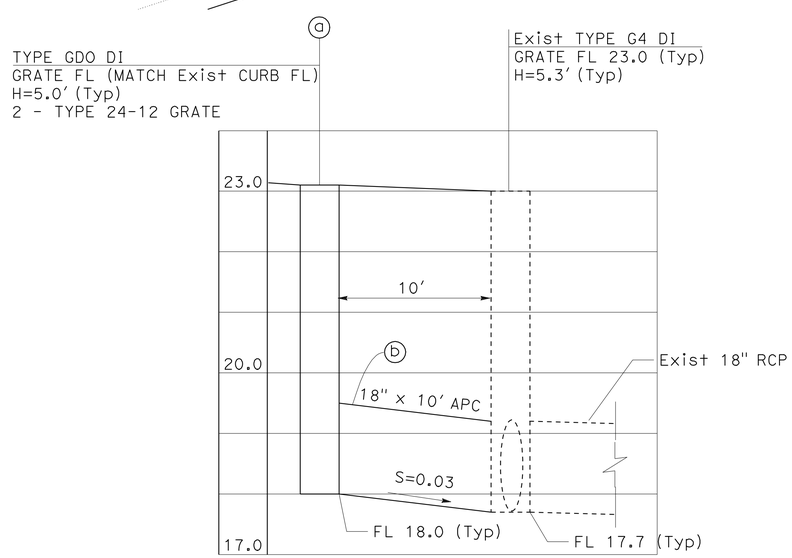

DRAINAGE SYSTEM No. 2
PROFILE

SCALE: Horiz 1:60
Vert 1:15

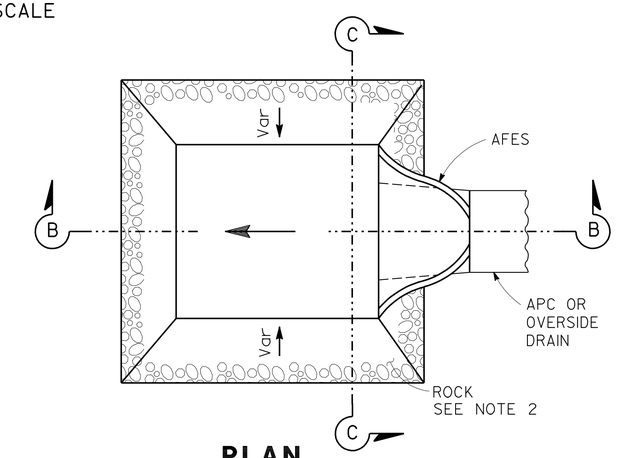

PLAN

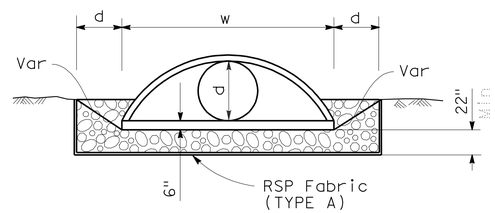

SECTION C-C

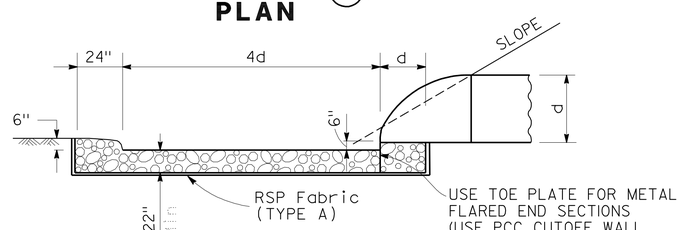

SECTION B-B

ROCK SLOPE PROTECTION DETAIL

NO SCALE

EXISTING UTILITY FACILITIES HAVE NOT BEEN PLOTTED ON THESE PLANS

DRAINAGE DETAILS
SCALE AS SHOWN **DD-2**

STATE OF CALIFORNIA - DEPARTMENT OF TRANSPORTATION
Caltrans 06-DESIGN
FUNCTIONAL SUPERVISOR ROBERTO BANDA
CALCULATED-DESIGNED BY PETER CHANDER
CHECKED BY HAL KENYON
REVISED BY
DATE REVISED

LAST REVISION 05-20-11
DATE PLOTTED => 12-AUG-2011
TIME PLOTTED => 11:17

Dist	COUNTY	ROUTE	POST MILES TOTAL PROJECT	SHEET No.	TOTAL SHEETS
05	SCr	1	R0.0/10.2	78	157

REGISTERED CIVIL ENGINEER DATE 5-20-11

PLANS APPROVAL DATE 6-20-11

REGISTERED PROFESSIONAL ENGINEER PETER A CHANDER No. 63988 Exp. 09-30-12 CIVIL STATE OF CALIFORNIA

THE STATE OF CALIFORNIA OR ITS OFFICERS OR AGENTS SHALL NOT BE RESPONSIBLE FOR THE ACCURACY OR COMPLETENESS OF SCANNED COPIES OF THIS PLAN SHEET.

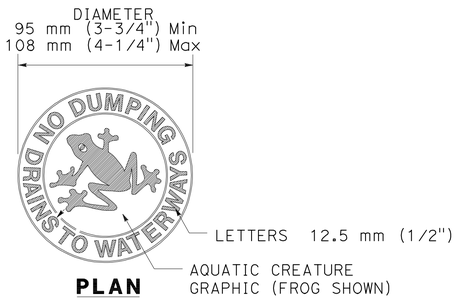

PLAN

DRAINAGE INLET MARKER
(STAINLESS STEEL)

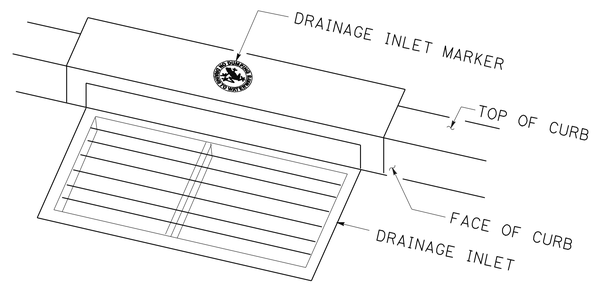

PERSPECTIVE

TYPICAL PLACEMENT OF DRAINAGE INLET
MARKER ON DRAINAGE INLET WITH A CURB

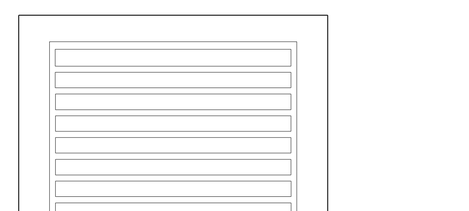

PLAN

TYPICAL PLACEMENT OF DRAINAGE
INLET MARKER ON DRAINAGE INLET

EXISTING UTILITY FACILITIES HAVE NOT BEEN PLOTTED ON THESE PLANS

DRAINAGE DETAILS

NO SCALE

DD-3

REVISED BY | DATE REVISED

PETER CHANDER | HAL KENYON

CALCULATED-DESIGNED BY | CHECKED BY

FUNCTIONAL SUPERVISOR | ROBERTO BANDA

STATE OF CALIFORNIA - DEPARTMENT OF TRANSPORTATION

Caltrans® **06-DESIGN**

LAST REVISION 05-20-11 | DATE PLOTTED => 12-AUG-2011 | TIME PLOTTED => 11:17

Dist	COUNTY	ROUTE	POST MILES TOTAL PROJECT	SHEET No.	TOTAL SHEETS
05	SCr	1	R0.0/10.2	79	157

REGISTERED CIVIL ENGINEER 5-20-11 DATE

6-20-11
PLANS APPROVAL DATE

REGISTERED PROFESSIONAL ENGINEER PETER A CHANDER No. 63988 Exp. 09-30-12 CIVIL STATE OF CALIFORNIA

THE STATE OF CALIFORNIA OR ITS OFFICERS OR AGENTS SHALL NOT BE RESPONSIBLE FOR THE ACCURACY OR COMPLETENESS OF SCANNED COPIES OF THIS PLAN SHEET.

NOTES:

1. SEE STANDARD PLANS FOR RCP STRENGTH CLASSIFICATION AND METHOD OF BACKFILL.
2. ALLOWABLE MATERIALS FOR AFES ARE CONCRETE, STEEL AND PLASTIC.
3. ALLOWABLE MATERIALS FOR APC ARE RCP (RGJ) AND PP (SMOOTH INTERIOR WALL).

ABBREVIATIONS:

S - STANDARD
RGJ - RUBBER GASKET JOINT

DRAINAGE QUANTITIES

DRAINAGE DETAILS SHEET No.	DRAINAGE SYSTEM No.	DRAINAGE UNIT	18" APC (3)	18" AFES (2)	MINOR CONCRETE (MINOR STRUCTURE)	Misc IRON AND STEEL	FRAME AND GRATE (N)	HEIGHT OF INLET (H) (N)	DRAINAGE INLET MARKER	RSP BACKING No.1, METHOD B	RSP ROCK SLOPE PROTECTION FABRIC	BAR REINFORCING STEEL (N)	MINOR Conc (Bkf)	PIPE JOINT CLASSIFICATION (N)	MAXIMUM COVER (N)	DESCRIPTION	Rte-PM-DIRECTION	STATION	DRAINAGE UNIT	DRAINAGE SYSTEM No.	DRAINAGE DETAILS SHEET No.
			LF	EA	CY	LB	EA	LF	EA	CY	SQYD	LB	CY		LF						
DD-1	1	a			0.9	326	1	2.50	1							DI TYPE G1 - TYPE 24-12 GRATE	1-R0.72-SB	0.06′ Lt "ALN1" LINE 15+44.00	a	1	DD-1
		b	150.0									340	70	S	3.9	18" x 150.0′ APC			b		
		c			1.3	326	1	4.38	1							DI TYPE G1 - TYPE 24-12 GRATE	1-R0.75-SB	0.23′ Lt "ALN1" LINE 16+94.00	c		
		d	84.0									100	40	S	3.9	18" x 84.0′ APC			d		
		e		1												18" AFES			e		
		f								5.5	16.5					RSP (BACKING No.1, METHOD B)			f		
DD-2	2	a			2.3	634	2	5.00	1							DI TYPE GDO - TYPE 24-12 GRATE	129-0.11-WB		a	2	DD-2
		b	10.0									30		S	3.9	18" x 10.0′ APC			b		
SHEET TOTAL			244.0	1	4.5	1286			3	5.5	16.5		110								
					1.5											MINOR Conc (MINOR Str) Qty From RECONSTRUCT GORE AREA TABLE IN Sht Q-2					
TOTAL			244.0	1	6.0	1286			3	5.5	16.5		110								

(N) - NOT A SEPARATE PAY ITEM, FOR INFORMATION ONLY.

DRAINAGE QUANTITIES
DQ-1

STATE OF CALIFORNIA - DEPARTMENT OF TRANSPORTATION
Caltrans 06-DESIGN

FUNCTIONAL SUPERVISOR: ROBERTO BANDA
CALCULATED-DESIGNED BY: HAL KENYON
CHECKED BY: PETER CHANDER
REVISED BY
DATE REVISED

LAST REVISION 05-20-11
DATE PLOTTED => 12-AUG-2011
TIME PLOTTED => 11:17

Dist	COUNTY	ROUTE	POST MILES TOTAL PROJECT	SHEET No.	TOTAL SHEETS
05	SCr	1	R0.0/10.2	80	157

REGISTERED CIVIL ENGINEER 5-20-11 DATE

6-20-11
PLANS APPROVAL DATE

REGISTERED PROFESSIONAL ENGINEER
PETER A CHANDER
No. 63988
Exp. 09-30-12
CIVIL
STATE OF CALIFORNIA

THE STATE OF CALIFORNIA OR ITS OFFICERS OR AGENTS SHALL NOT BE RESPONSIBLE FOR THE ACCURACY OR COMPLETENESS OF SCANNED COPIES OF THIS PLAN SHEET.

ADJUST FRAME AND GRATE TO GRADE

PM	LOCATION	DIRECTION	(N) Exist INLET TYPE
R0.22	ROUTE 1	SB	G-2
R0.22	ROUTE 1	NB	G-2
R0.32	ROUTE 1	SB	G-1
R0.32	ROUTE 1	NB	G-1
	ON RAMP ROUTE 129	SB Rt	G-2
	ON RAMP ROUTE 129	SB Rt	G-4
	OFF RAMP ROUTE 129	SB Rt	G-2
	OFF RAMP ROUTE 129	SB Rt	GO
R0.60	ROUTE 1	SB	G-2
	OFF RAMP ROUTE 129	NB Rt	GO
	OFF RAMP ROUTE 129	NB Rt	G-1
	OFF RAMP ROUTE 129	NB Lt	G-4
R0.75	ROUTE 1	SB	G-2
	ON RAMP ROUTE 129	NB Rt	G-2
	ON RAMP ROUTE 129	NB Lt	G-4
	ON RAMP ROUTE 129	NB Rt	G-2 Mod
	OFF RAMP ROUTE 129	NB Rt	G-2
	OFF RAMP ROUTE 129	NB Rt	OS Inlet
R0.89	ROUTE 1	SB	GO
	ON RAMP ROUTE 129	NB Rt	GO
	ON RAMP ROUTE 129	NB Lt	OS Inlet
R1.04	ROUTE 1	SB	G-2
R1.04	ROUTE 1	NB	G-2
R1.33	ROUTE 1	SB	G-2
R1.33	ROUTE 1	NB	G-2
R1.57	ROUTE 1	SB	G-1
R1.57	ROUTE 1	NB	G-1
R1.74	ROUTE 1	SB	G-1
R1.74	ROUTE 1	NB	G-2
R1.88	ROUTE 1	NB	G-2
R2.00	ROUTE 1	SB	G-2
R2.00	ROUTE 1	NB	G-2
	ON RAMP HARKINS SLOUGH Rd	SB Rt	GO
R2.12	ROUTE 1	SB	GO
R2.11	ROUTE 1	NB	GO
R2.13	ROUTE 1	NB	G-2
	OFF RAMP HARKINS SLOUGH Rd	NB Rt	GO
R2.35	ROUTE 1	SB	G-2
R2.34	ROUTE 1	NB	G-2
R2.41	ROUTE 1	NB	G-2
R2.56	ROUTE 1	SB	G-2
R2.57	ROUTE 1	NB	G-2
	ROUTE 1	SB	G-2
R2.79	ON RAMP ROUTE 152	NB Rt	GO
R2.87	ROUTE 1	SB	G-2
R2.87	ROUTE 1	NB	G-2
R2.94	ROUTE 1	NB	G-2
	OFF RAMP ROUTE 152	SB Lt	G-1
	OFF RAMP ROUTE 152	SB Lt	GO
	OFF RAMP ROUTE 152	SB Rt	G-5
SUBTOTAL (1)			50

(N) NOT A SEPARATE PAY ITEM, FOR INFORMATION ONLY.

ADJUST FRAME AND GRATE TO GRADE

PM	LOCATION	DIRECTION	(N) Exist INLET TYPE
R3.01	ROUTE 1	SB	G-2
R3.00	ROUTE 1	NB	G-2
	ON RAMP AIRPORT Blvd	SB Rt	GO
	ON RAMP AIRPORT Blvd	NB Lt	G-2
	ON RAMP AIRPORT Blvd	NB Rt	G-2
	OFF RAMP AIRPORT Blvd	NB Rt	G-2
R3.35	ROUTE 1	NB	G-2
R3.41	ROUTE 1	SB	G-2
	ON RAMP AIRPORT Blvd	NB Rt	G-2
R3.61	ROUTE 1	NB	GO-Mod
R3.62	ROUTE 1	NB	GO-Mod
R3.63	ROUTE 1	NB	GO-Mod
R3.61	ROUTE 1	SB	GO
R3.62	ROUTE 1	SB	GO-Mod
R3.63	ROUTE 1	SB	GO-Mod
R3.69	ROUTE 1	SB	GO-Mod
R3.81	ROUTE 1	SB	GO
	OFF RAMP BUENA VISTA Dr	NB Rt	GO_Mod
	ON RAMP BUENA VISTA Dr	SB Rt	GO-Mod
	ON RAMP BUENA VISTA Dr	SB Lt	GO-Mod
	ON RAMP BUENA VISTA Dr	SB Lt	G-2
R4.05	ROUTE 1	SB	GO-Mod
	ON RAMP BUENA VISTA Dr	NB Rt	GO-Mod
	ON RAMP BUENA VISTA Dr	NB Rt	GO
	ON RAMP BUENA VISTA Dr	NB Rt	GO-Mod
	ON RAMP BUENA VISTA Dr	NB Rt	GO-Mod
	ON RAMP BUENA VISTA Dr	NB Rt	GO_Mod
	ON RAMP BUENA VISTA Dr	NB Rt	GO-Mod
R4.15	ROUTE 1	SB	GO-Mod
R4.24	ROUTE 1	SB	GO-Mod
R4.24	ROUTE 1	NB	GO-Mod
	OFF RAMP BUENA VISTA Dr	SB Lt	GO-Mod
	OFF RAMP BUENA VISTA Dr	SB Rt	GO-Mod
	OFF RAMP BUENA VISTA Dr	SB Rt	GO-Mod
	OFF RAMP BUENA VISTA Dr	SB Lt	GO-Mod
	OFF RAMP BUENA VISTA Dr	SB Rt	GO-Mod
	OFF RAMP BUENA VISTA Dr	SB Lt	GO-Mod
R4.34	ROUTE 1	SB	GO
R4.34	ROUTE 1	NB	GO
R4.38	ROUTE 1	NB	GO
R4.49	ROUTE 1	NB	GO-Mod
	OFF RAMP BUENA VISTA Dr	SB Rt	GO-Mod
R4.55		NB	GO-Mod
R4.66		SB	GO-Mod
R4.66		NB	GO-Mod
R4.72		SB	GO
R4.89		SB	GO
R4.88		NB	GO-Mod
R4.96		SB	GO-Mod
R4.96		NB	GO-Mod
SUBTOTAL (2)			50

(N) NOT A SEPARATE PAY ITEM, FOR INFORMATION ONLY.

DRAINAGE QUANTITIES
DQ-2

REVISED BY | DATE REVISED
PETER CHANDER | HAL KENYON
CALCULATED-DESIGNED BY | CHECKED BY
FUNCTIONAL SUPERVISOR | ROBERTO BANDA
STATE OF CALIFORNIA - DEPARTMENT OF TRANSPORTATION
Caltrans® 06-DESIGN

LAST REVISION 05-20-11 | DATE PLOTTED => 12-AUG-2011 | TIME PLOTTED => 11:17

Dist	COUNTY	ROUTE	POST MILES TOTAL PROJECT	SHEET No.	TOTAL SHEETS
05	SCr	1	R0.0/10.2	81	157

REGISTERED CIVIL ENGINEER 5-20-11 DATE

6-20-11
PLANS APPROVAL DATE

REGISTERED PROFESSIONAL ENGINEER PETER A CHANDER No. 63988 Exp 09-30-12 CIVIL STATE OF CALIFORNIA

THE STATE OF CALIFORNIA OR ITS OFFICERS OR AGENTS SHALL NOT BE RESPONSIBLE FOR THE ACCURACY OR COMPLETENESS OF SCANNED COPIES OF THIS PLAN SHEET.

ADJUST FRAME AND GRATE TO GRADE

PM	LOCATION	DIRECTION	(N) Exist INLET TYPE
R5.04	ROUTE 1	SB	GO-Mod
R5.04	ROUTE 1	NB	GO-Mod
R5.14	ROUTE 1	SB	GO-Mod
R5.14	ROUTE 1	NB	GO
R5.22	ROUTE 1	SB	GO
R5.22	ROUTE 1	NB	GO-Mod
R5.31	ROUTE 1	NB	GO-Mod
R5.32	ROUTE 1	SB	GO
R5.39	ROUTE 1	SB	GO
R5.45	ROUTE 1	SB	GO
R5.51	ROUTE 1	NB	GO-Mod
R5.57	ROUTE 1	NB	GO-Mod
R5.82	ROUTE 1	SB	GO
	ON RAMP VISTA PT REST AREA	SB R+	GO
	ON RAMP VISTA PT REST AREA	SB L+	GO
	OFF RAMP VISTA PT REST AREA	SB R+	GO
	ON RAMP VISTA PT REST AREA	SB L+	GO
R5.91	ROUTE 1	SB	GO
	ON RAMP VISTA PT REST AREA	SB R+	GO
R5.79	ROUTE 1	NB	GO-Mod
R5.91	ROUTE 1	NB	GO
R5.99	ROUTE 1	NB	GO-Mod
	ON RAMP VISTA PT REST AREA	SB L+	GO-Mod
R6.10	ROUTE 1	SB	GO
R6.16	ROUTE 1	NB	GO-Mod
R6.34	ON RAMP MAR MONTE Ave	SB R+	GO-Mod
	ON RAMP MAR MONTE Ave	SB R+	GO
	ON RAMP MAR MONTE Ave	SB L+	GO
	OFF RAMP MAR MONTE Ave	SB R+	GO
	OFF RAMP MAR MONTE Ave	SB R+	GO
	OFF RAMP MAR MONTE Ave	SB L+	GO-Mod
R6.34	ROUTE 1	NB	GO-Mod
R6.42	ROUTE 1	NB	G-2
	OFF RAMP MAR MONTE Ave	NB R+	G-2
	OFF RAMP MAR MONTE Ave	NB R+	G-2
	OFF RAMP MAR MONTE Ave	NB R+	G-2
R6.62	ROUTE 1	NB	GO-Mod
	OFF RAMP MAR MONTE Ave	NB R+	GO
	OFF RAMP MAR MONTE Ave	NB R+	GO-Mod
	OFF RAMP MAR MONTE Ave	NB R+	GO
	OFF RAMP MAR MONTE Ave	NB L+	GO-Mod
	ON RAMP MAR MONTE Ave	NB R+	G-2
	ON RAMP MAR MONTE Ave	NB R+	GO
	ON RAMP MAR MONTE Ave	NB R+	GO-Mod
R6.76		SB	GO
R6.74		NB	GO-Mod
R6.85		NB	GO-Mod
R7.00		SB	GO
R7.02		SB	GO-Mod
R7.03		SB	GO-Mod
SUBTOTAL (3)			50

(N) NOT A SEPARATE PAY ITEM, FOR INFORMATION ONLY.

ADJUST FRAME AND GRATE TO GRADE

PM	LOCATION	DIRECTION	(N) Exist INLET TYPE
R7.10	ROUTE 1	SB	GO-Mod
R7.16	ROUTE 1	SB	GO
R7.05	ROUTE 1	NB	G-2
R7.08	ROUTE 1	NB	G-2
	ON RAMP MAR MONTE Ave	NB	GO
	ON RAMP MAR MONTE Ave	NB	GO
	ON RAMP MAR MONTE Ave	NB	GO
	ON RAMP MAR MONTE Ave	NB	GO-Mod
R7.23	ROUTE 1	SB	GO
R7.27	ROUTE 1	SB	GO-Mod
R7.37	ROUTE 1	SB	GO-Mod
	ON RAMP LARKIN VALLEY Rd	SB L+	GO
R7.23	ROUTE 1	NB	GO-Mod
R7.28	ROUTE 1	NB	GO-Mod
R7.34	ROUTE 1	NB	GO-Mod
R7.41	ROUTE 1	NB	GO-Mod
R7.46	ROUTE 1	NB	GO
	ON RAMP LARKIN VALLEY Rd	SB R+	GO
	ON RAMP LARKIN VALLEY Rd	SB L+	GO
	ON RAMP LARKIN VALLEY Rd	SB R+	GO
	ON RAMP LARKIN VALLEY Rd	SB L+	GO
R7.61	ROUTE 1	SB	GO
	ON RAMP LARKIN VALLEY Rd	SB R+	GO
	ON RAMP LARKIN VALLEY Rd	SB L+	GO-Mod
	ON RAMP LARKIN VALLEY Rd	SB L+	GO
R7.67	ROUTE 1	SB	GO-Mod
	ON RAMP LARKIN VALLEY Rd	SB L+	GO
	ON RAMP LARKIN VALLEY Rd	SB L+	GO
	ON RAMP LARKIN VALLEY Rd	SB L+	GO-Mod
	ON RAMP LARKIN VALLEY Rd	SB R+	GO-Mod
	ON RAMP LARKIN VALLEY Rd	SB L+	GO-Mod
R7.65	ROUTE 1	NB	GO-Mod
R7.74	ROUTE 1	SB	GO-Mod
	ON RAMP LARKIN VALLEY Rd	SB R+	GO
R7.95	ROUTE 1	SB	GO-Mod
	OFF RAMP LARKIN VALLEY Rd	NB R+	GO
	OFF RAMP LARKIN VALLEY Rd	NB L+	GO
	OFF RAMP LARKIN VALLEY Rd	NB R+	GO
	ON RAMP LARKIN VALLEY Rd	NB R+	GO-Mod
	ON RAMP LARKIN VALLEY Rd	NB R+	GO
	ON RAMP LARKIN VALLEY Rd	NB L+	G-1
	ON RAMP LARKIN VALLEY Rd	NB L+	GO
	ON RAMP LARKIN VALLEY Rd	NB R+	GO
	ON RAMP LARKIN VALLEY Rd	NB R+	GO
8.17	ROUTE 1	SB	GO-Mod
8.27	ROUTE 1	SB	GO-Mod
8.16	ROUTE 1	NB	GO-Mod
8.20	ROUTE 1	NB	GO
8.26	ROUTE 1	NB	GO-Mod
8.33	ROUTE 1	NB	GO
SUBTOTAL (4)			50

(N) NOT A SEPARATE PAY ITEM, FOR INFORMATION ONLY.

ADJUST FRAME AND GRATE TO GRADE

PM	LOCATION	DIRECTION	(N) Exist INLET TYPE
8.37	ROUTE 1	NB	GO-Mod
8.16	ROUTE 1	NB	G-1
8.36	ROUTE 1	SB	G-1
8.20	ON RAMP FREEDOM Blvd	SB R+	G-2
8.20	ROUTE 1	NB	G-1
8.26	ROUTE 1	NB	G-2
8.33	ROUTE 1	NB	G-1
8.37	ROUTE 1	NB	GO-Mod
	ON RAMP FREEDOM Blvd	NB R+	GO-Mod
	ON RAMP FREEDOM Blvd	SB R+	GO-Mod
	ON RAMP FREEDOM Blvd	SB R+	GO-Mod
	ON RAMP FREEDOM Blvd	SB R+	GO-Mod
8.33	ROUTE 1	SB	G-1
8.36	ROUTE 1	SB	G-2
8.35	ROUTE 1	NB	GO-Mod
8.47	ROUTE 1	NB	GO-Mod
	OFF RAMP FREEDOM Blvd	NB R+	GO
	OFF RAMP FREEDOM Blvd	NB R+	GO
	ON RAMP FREEDOM Blvd	NB R+	G-2
	ON RAMP FREEDOM Blvd	NB R+	GO-Mod
	OFF RAMP FREEDOM Blvd	SB R+	G-2
8.71	ROUTE 1	SB	G-2
8.62	ROUTE 1	SB	G-1
	ON RAMP FREEDOM Blvd	NB R+	G-2
	ON RAMP FREEDOM Blvd	NB R+	G-1
8.92	ROUTE 1	SB	G-2
	ON RAMP RIO DEL MAR Blvd	SB R+	G-2
9.02	ROUTE 1	SB	G-4
9.03	ROUTE 1	SB	G-4
9.03	ROUTE 1	SB	G-2
	OFF RAMP RIO DEL MAR Blvd	NB R+	G-1
	ON RAMP RIO DEL MAR Blvd	SB R+	G-2
	ON RAMP RIO DEL MAR Blvd	SB L+	G-1
	OFF RAMP RIO DEL MAR Blvd	SB R+	G-2
	OFF RAMP RIO DEL MAR Blvd	SB R+	G-1
9.23	ROUTE 1	NB	G-2
9.27	ROUTE 1	NB	G-2
9.27	ROUTE 1	NB	G-4
	ON RAMP RIO DEL MAR Blvd	NB R+	G-2
SUBTOTAL			39
SUBTOTAL (1) Sht DQ-2			50
SUBTOTAL (2) Sht DQ-2			50
SUBTOTAL (3)			50
SUBTOTAL (4)			50
TOTAL			239

(N) NOT A SEPARATE PAY ITEM, FOR INFORMATION ONLY.

DRAINAGE QUANTITIES
DQ-3

STATE OF CALIFORNIA - DEPARTMENT OF TRANSPORTATION
Caltrans 06-DESIGN

FUNCTIONAL SUPERVISOR: ROBERTO BANDA
CALCULATED-DESIGNED BY: PETER CHANDER
CHECKED BY: HAL KENYON
REVISED BY / DATE REVISED

LAST REVISION 05-20-11
DATE PLOTTED => 12-AUG-2011
TIME PLOTTED => 11:17

Dist	COUNTY	ROUTE	POST MILES TOTAL PROJECT	SHEET No.	TOTAL SHEETS
05	SCr	1	R0.0/10.2	82	132Z

REGISTERED CIVIL ENGINEER 06-20-11 DATE

6-20-11
PLANS APPROVAL DATE

REGISTERED PROFESSIONAL ENGINEER FAWZI YAGHMOUR No. C-54750 Exp. 12/31/11 CIVIL STATE OF CALIFORNIA

THE STATE OF CALIFORNIA OR ITS OFFICERS OR AGENTS SHALL NOT BE RESPONSIBLE FOR THE ACCURACY OR COMPLETENESS OF SCANNED COPIES OF THIS PLAN SHEET.

STATIONARY MOUNTED CONSTRUCTION AREA SIGNS

SIGN No.	SIGN CODE	PANEL SIZE	SIGN MESSAGE	No. OF POSTS AND SIZE	No. OF SIGNS
A	W20-1	60" x 60"	ROAD WORK AHEAD	2-4" x 6"	1
B	W20-1	36" x 36"	ROAD WORK AHEAD	1-4" x 6"	9
C	G20-2	36" x 24"	END ROAD WORK	1-4" x 6"	9
SUB-TOTAL					19

NOTE: 1. LOCATION OF CONSTRUCTION AREA SIGNS ARE APPROXIMATE. EXACT LOCATIONS WILL BE DETERMINED BY THE ENGINEER.

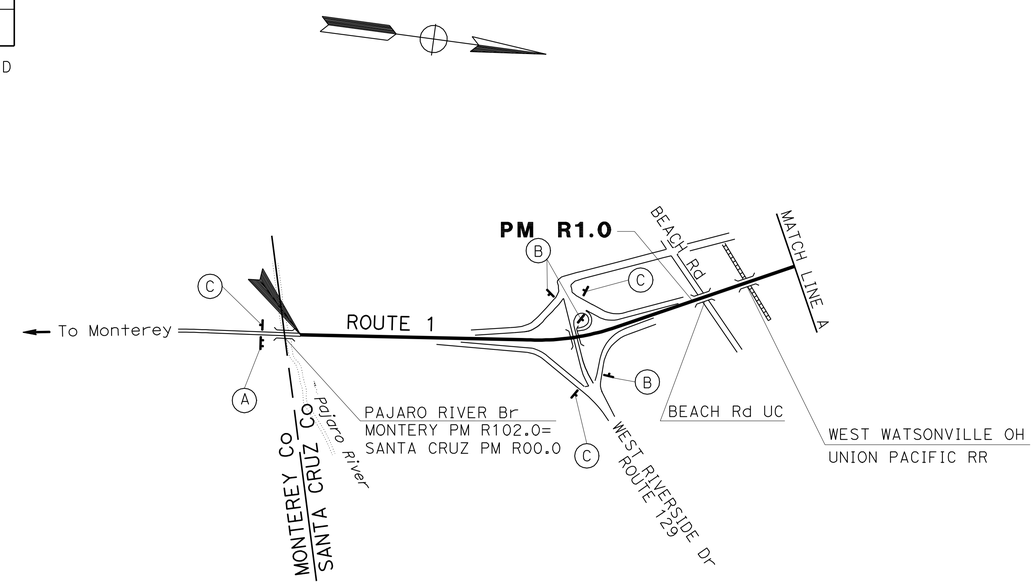

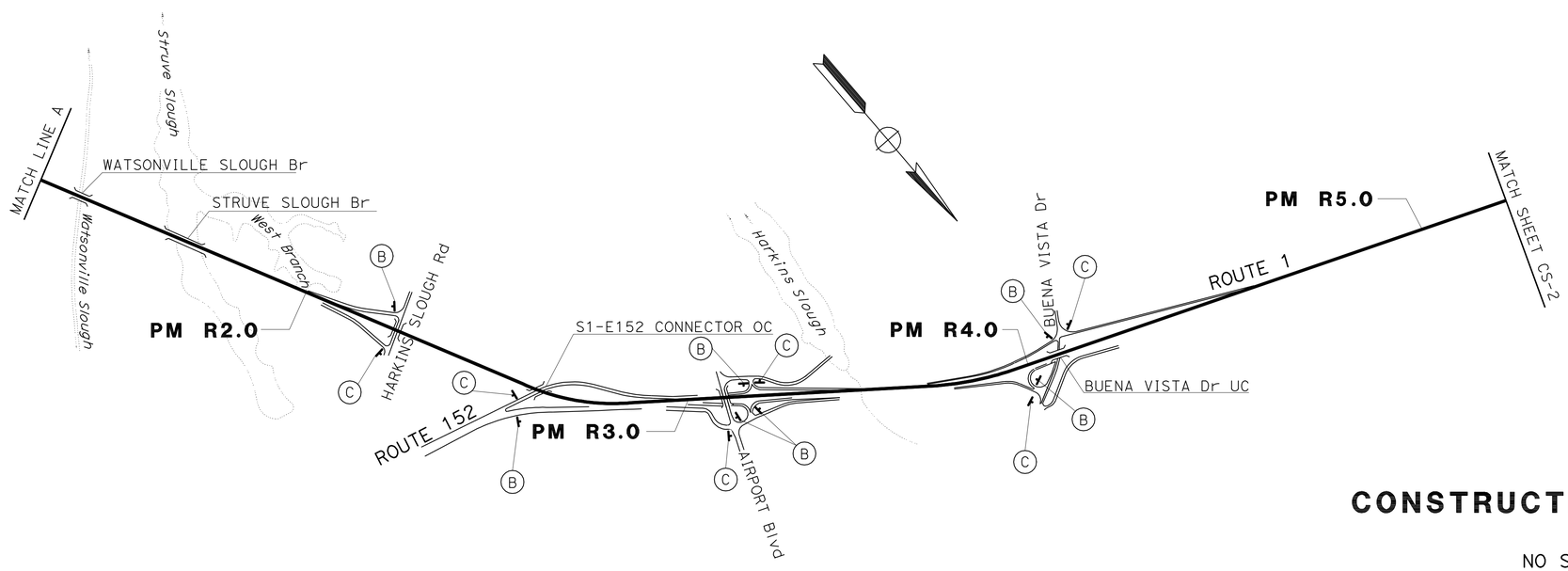

CONSTRUCTION AREA SIGNS

NO SCALE

CS-1

STATE OF CALIFORNIA - DEPARTMENT OF TRANSPORTATION
Caltrans® TRAFFIC DESIGN

FUNCTIONAL SUPERVISOR: MOHAMMED QATAMI
CALCULATED-DESIGNED BY: DAVID BLACK
CHECKED BY: FAWZI YAGHMOUR
REVISED BY
DATE REVISED

LAST REVISION 05-20-11
DATE PLOTTED => 12-AUG-2011
TIME PLOTTED => 11:18

BORDER LAST REVISED 7/2/2010
USERNAME => s115755
DGN FILE => 05000202341a001.dgn
RELATIVE BORDER SCALE IS IN INCHES 0 1 2 3
UNIT 1512
PROJECT NUMBER & PHASE 05000202341

Dist	COUNTY	ROUTE	POST MILES TOTAL PROJECT	SHEET No.	TOTAL SHEETS
05	SCr	1	R0.0/10.2	83	132Z

REGISTERED CIVIL ENGINEER 06-20-11 DATE

6-20-11
PLANS APPROVAL DATE

REGISTERED PROFESSIONAL ENGINEER FAWZI YAGHMOUR No. C-54750 Exp. 12/31/11 CIVIL STATE OF CALIFORNIA

THE STATE OF CALIFORNIA OR ITS OFFICERS OR AGENTS SHALL NOT BE RESPONSIBLE FOR THE ACCURACY OR COMPLETENESS OF SCANNED COPIES OF THIS PLAN SHEET.

STATIONARY MOUNTED CONSTRUCTION AREA SIGNS

SIGN No.	SIGN CODE	PANEL SIZE	SIGN MESSAGE	No. OF POSTS AND SIZE	No. OF SIGNS
A	W20-1	60" x 60"	ROAD WORK AHEAD	2-4" x 6"	1
B	W20-1	36" x 36"	ROAD WORK AHEAD	1-4" x 6"	7
C	G20-2	36" x 24"	END ROAD WORK	1-4" x 6"	8
SUB-TOTAL					16
SUB-TOTAL CS-1					19
TOTAL					35

NOTE: 1. LOCATION OF CONSTRUCTION AREA SIGNS ARE APPROXIMATE. EXACT LOCATIONS WILL BE DETERMINED BY THE ENGINEER.

2. SEE THQ FOR ADDITIONAL CONSTRUCTION AREA SIGNS.

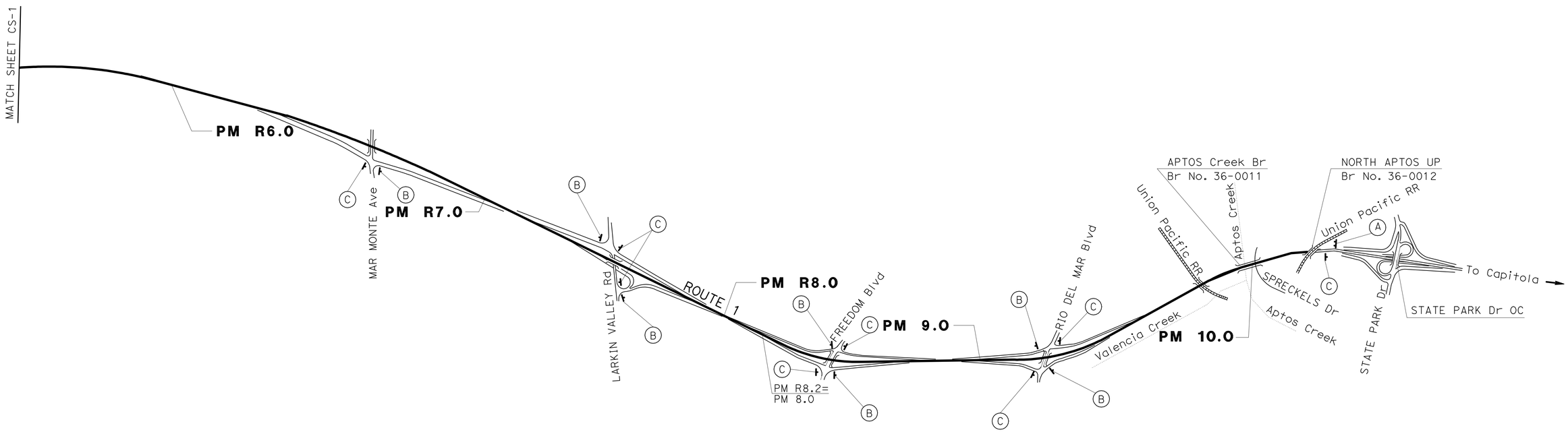

CONSTRUCTION AREA SIGNS

NO SCALE

CS-2

REVISED BY | DATE REVISED

DAVID BLACK | FAWZI YAGHMOUR

CALCULATED-DESIGNED BY | CHECKED BY

FUNCTIONAL SUPERVISOR: MOHAMMED QATAMI

STATE OF CALIFORNIA - DEPARTMENT OF TRANSPORTATION

Caltrans® **TRAFFIC DESIGN**

LAST REVISION 05-20-11 | DATE PLOTTED => 12-AUG-2011 | TIME PLOTTED => 11:18

Dist	COUNTY	ROUTE	POST MILES TOTAL PROJECT	SHEET No.	TOTAL SHEETS
05	SCr	1	R0.0/10.2	84	157

REGISTERED CIVIL ENGINEER 06-20-11 DATE

6-20-11
PLANS APPROVAL DATE

REGISTERED PROFESSIONAL ENGINEER FAWZI YAGHMOUR No. C-54750 Exp. 12/31/11 CIVIL STATE OF CALIFORNIA

THE STATE OF CALIFORNIA OR ITS OFFICERS OR AGENTS SHALL NOT BE RESPONSIBLE FOR THE ACCURACY OR COMPLETENESS OF SCANNED COPIES OF THIS PLAN SHEET.

LEGEND

- TEMPORARY CRASH CUSHION ARRAY 'TS14'
- CHANNELIZER (SURFACE MOUNTED)
- TEMPORARY RAILING (TYPE K)
- OBJECT MARKER (TYPE P)

ABBREVIATIONS

QCMB QUICK CHANGABLE MOVEABLE BARRIER

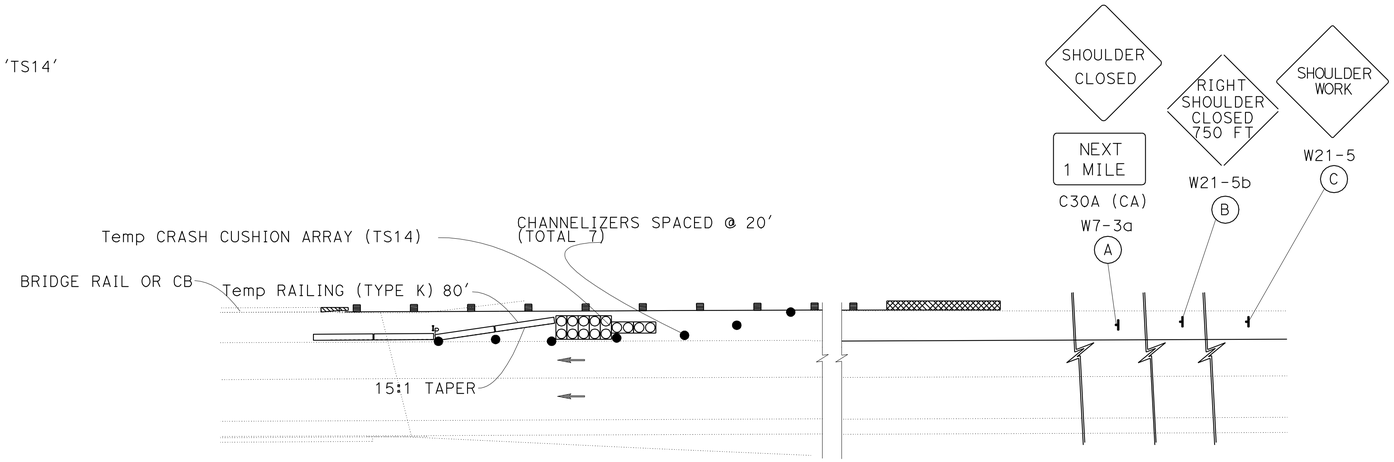

LOCATIONS 3,4,5,6,7,13,27,32,33,34,42

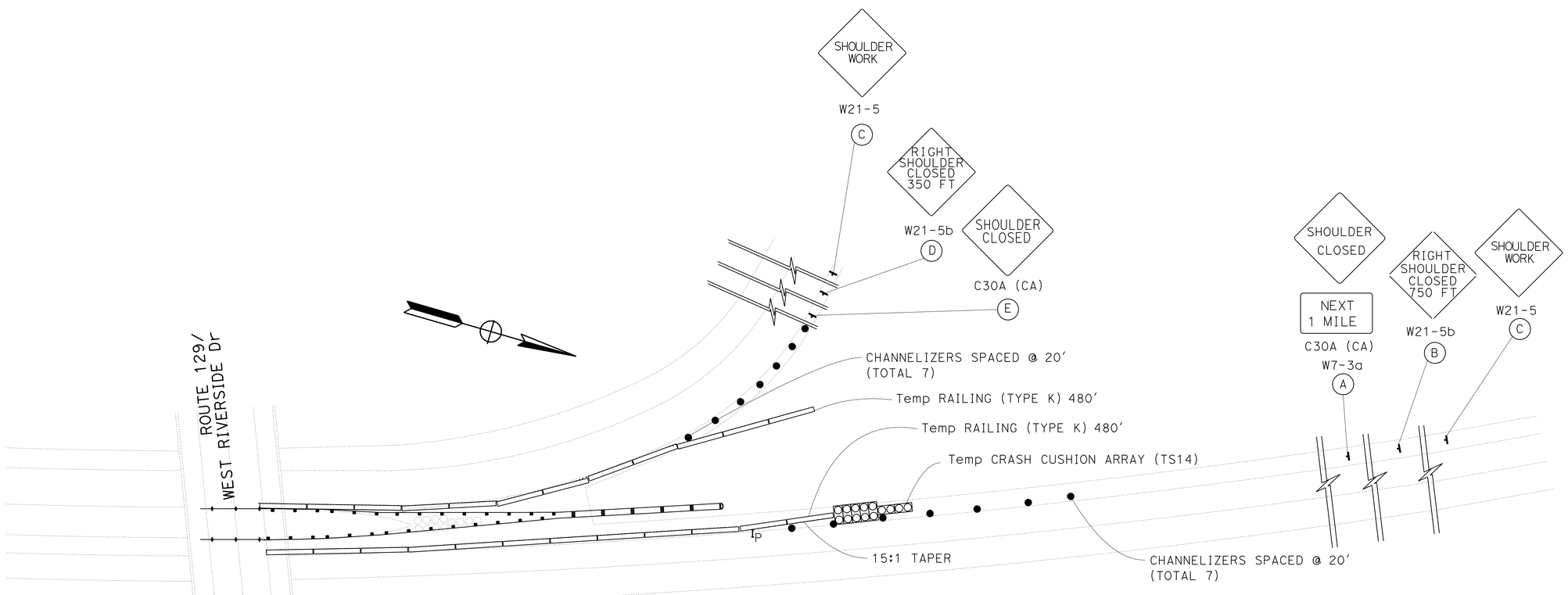

LOCATION 28

TRAFFIC HANDLING PLAN

NO SCALE

TH-1

THIS PLAN ACCURATE FOR TRAFFIC HANDLING ONLY

STATE OF CALIFORNIA - DEPARTMENT OF TRANSPORTATION
Caltrans® **TRAFFIC DESIGN**

FUNCTIONAL SUPERVISOR: MOHAMMED QATAMI
CALCULATED-DESIGNED BY: DAVID BLACK
CHECKED BY: FAWZI YAGHMOUR
REVISED BY / DATE REVISED

LAST REVISION 06-16-11
DATE PLOTTED => 12-AUG-2011
TIME PLOTTED => 11:18

Dist	COUNTY	ROUTE	POST MILES TOTAL PROJECT	SHEET No.	TOTAL SHEETS
05	SCr	1	R0.0/10.2	85	157

REGISTERED CIVIL ENGINEER — DATE 06-20-11

6-20-11
PLANS APPROVAL DATE

REGISTERED PROFESSIONAL ENGINEER — FAWZI YAGHMOUR — No. C-54750 — Exp. 12/31/11 — CIVIL — STATE OF CALIFORNIA

THE STATE OF CALIFORNIA OR ITS OFFICERS OR AGENTS SHALL NOT BE RESPONSIBLE FOR THE ACCURACY OR COMPLETENESS OF SCANNED COPIES OF THIS PLAN SHEET.

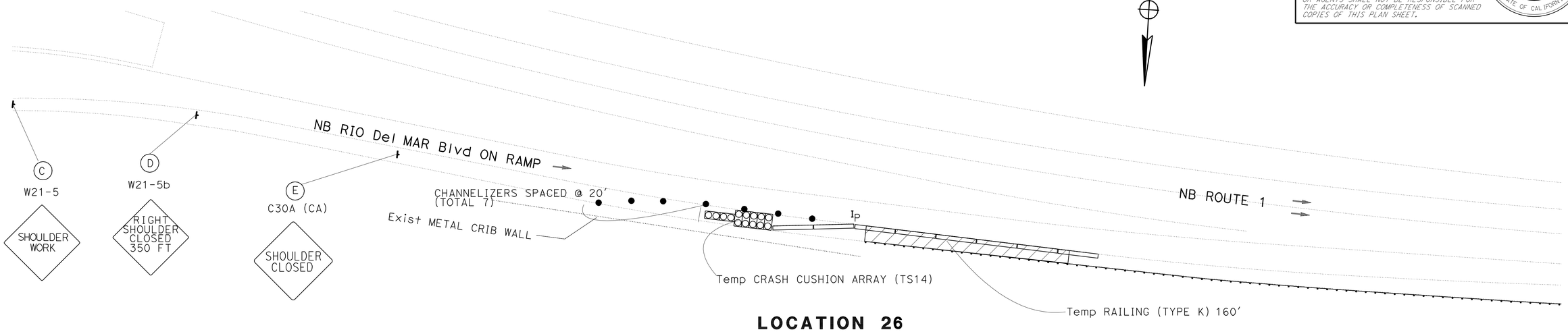

LOCATION 26

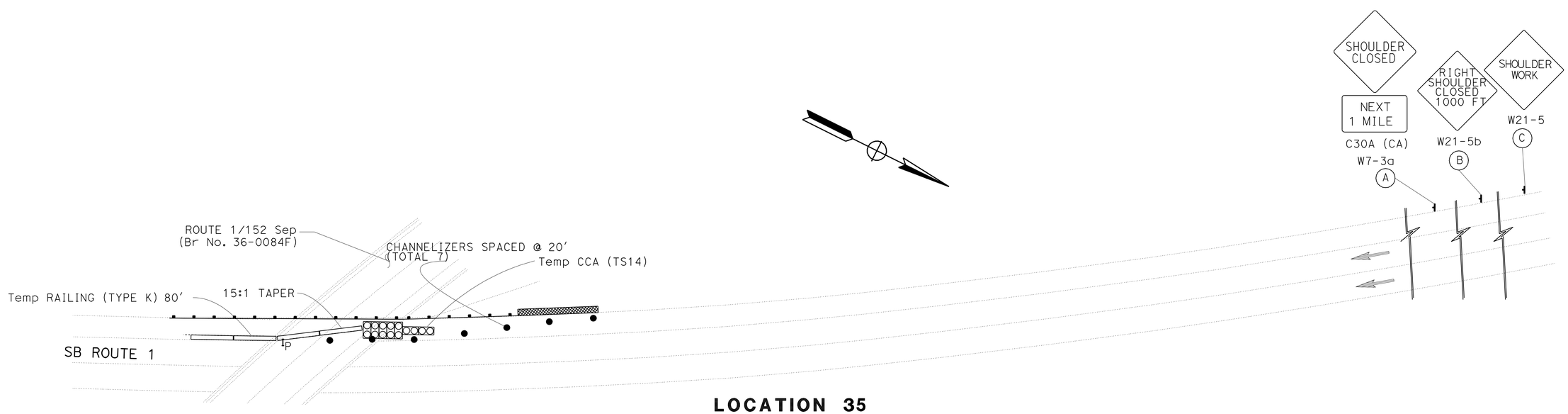

LOCATION 35

TRAFFIC HANDLING PLAN

EXISTING UTILITY FACILITIES HAVE NOT BEEN PLOTTED ON THESE PLANS

THIS PLAN ACCURATE FOR TRAFFIC HANDLING ONLY

NO SCALE

TH-2

STATE OF CALIFORNIA - DEPARTMENT OF TRANSPORTATION
Caltrans® **TRAFFIC DESIGN**

FUNCTIONAL SUPERVISOR: MOHAMMED QATAMI
CALCULATED-DESIGNED BY: DAVID BLACK
CHECKED BY: FAWZI YAGHMOUR
REVISED BY
DATE REVISED

LAST REVISION 05-20-11
DATE PLOTTED => 12-AUG-2011
TIME PLOTTED => 11:18

Dist	COUNTY	ROUTE	POST MILES TOTAL PROJECT	SHEET No.	TOTAL SHEETS
05	SCr	1	R0.0/10.2	86	157

REGISTERED CIVIL ENGINEER 5-20-11 DATE

6-20-11
PLANS APPROVAL DATE

REGISTERED PROFESSIONAL ENGINEER PETER A CHANDER No. 63988 Exp. 09-30-12 CIVIL STATE OF CALIFORNIA

THE STATE OF CALIFORNIA OR ITS OFFICERS OR AGENTS SHALL NOT BE RESPONSIBLE FOR THE ACCURACY OR COMPLETENESS OF SCANNED COPIES OF THIS PLAN SHEET.

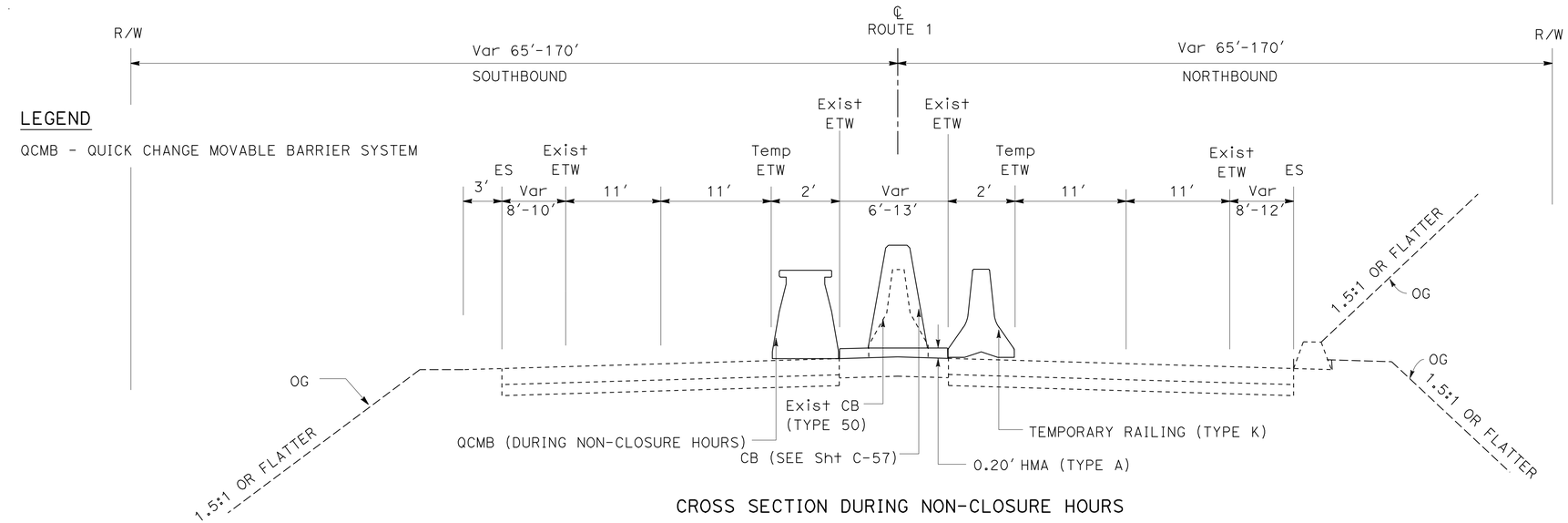

CROSS SECTION DURING NON-CLOSURE HOURS

ROUTE 1
PM 9.43 TO 10.23

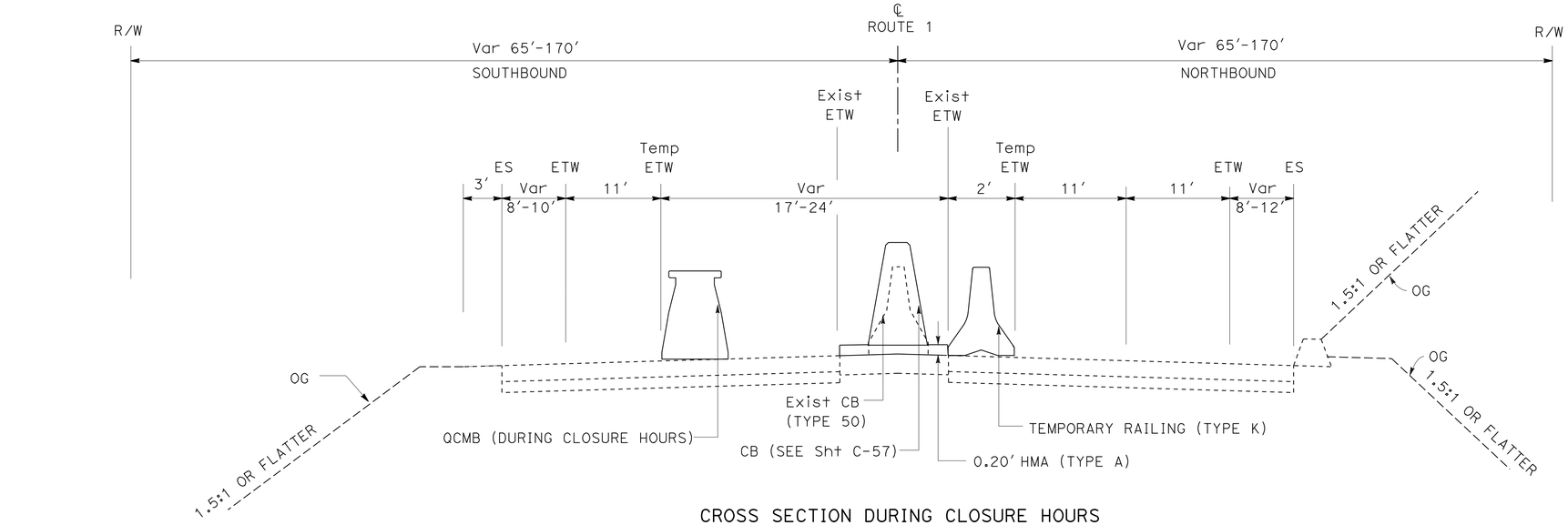

CROSS SECTION DURING CLOSURE HOURS

ROUTE 1
PM 9.43 TO 10.23

CONCRETE MEDIAN BARRIER, TRAFFIC HANDLING

EXISTING UTILITY FACILITIES HAVE NOT BEEN PLOTTED ON THESE PLANS

TRAFFIC HANDLING DETAILS

NO SCALE

THD-1

REVISED BY | DATE REVISED
MICAELA GARCIA | PETER CHANDER
CALCULATED-DESIGNED BY | CHECKED BY
FUNCTIONAL SUPERVISOR
ROBERTO BANDA

STATE OF CALIFORNIA - DEPARTMENT OF TRANSPORTATION
Caltrans
06-DESIGN

LAST REVISION 05-20-11 | DATE PLOTTED => 12-AUG-2011 TIME PLOTTED => 11:18

Dist	COUNTY	ROUTE	POST MILES TOTAL PROJECT	SHEET No.	TOTAL SHEETS
05	SCr	1	R0.0/10.2	87	157

REGISTERED CIVIL ENGINEER 06-20-11 DATE

6-20-11
PLANS APPROVAL DATE

REGISTERED PROFESSIONAL ENGINEER FAWZI YAGHMOUR No. C-54750 Exp. 12/31/11 CIVIL STATE OF CALIFORNIA

THE STATE OF CALIFORNIA OR ITS OFFICERS OR AGENTS SHALL NOT BE RESPONSIBLE FOR THE ACCURACY OR COMPLETENESS OF SCANNED COPIES OF THIS PLAN SHEET.

CONSTRUCTION AREA SIGNS (STATIONARY MOUNTED)

LOCATION	SHEET	No. OF SIGN	SIGN No. ◯	SIGN CODE	PANEL SIZE	No. OF POST AND SIZE	REMARKS	PLACEMENT
3,4,5,6,7,13,27 28,32,33,34,42	TH-1	13	C	W21-5	48" x 48"	1 - 4" x 6"	SHOULDER WORK	AS DIRECTED BY THE ENGINEER
		12	B	W21-5b	48" x 48"	1 - 4" x 6"	RIGHT SHOULDER CLOSED 750 FT	
		12	A	C30A (CA)	48" x 48"	1 - 6" x 6"	SHOULDER CLOSED	
				W7-3a	32" x 18"		NEXT 1 MILE	
		1	D	W21-5b	48" x 48"	1 - 4" x 6"	RIGHT SHOULDER CLOSED 350 FT	
		1	E	C30A (CA)	48" x 48"	1 - 4" x 6"	SHOULDER CLOSED	
26,35	TH-2	2	C	W21-5	48" x 48"	1 - 4" x 6"	SHOULDER WORK	
		1	B	W21-5b	48" x 48"	1 - 4" x 6"	RIGHT SHOULDER CLOSED 750 FT	
		1	A	C30A (CA)	48" x 48"	1 - 6" x 6"	SHOULDER CLOSED	
				W7-3a	32" x 18"		NEXT 1 MILE	
		1	D	W21-5b	48" x 48"	1 - 4" x 6"	RIGHT SHOULDER CLOSED 350 FT	
		1	E	C30A (CA)	48" x 48"	1 - 4" x 6"	SHOULDER CLOSED	
SUB-TOTAL		45						

NOTE: 1. SEE SHEET CS-2 FOR ADDITIONAL CONSTRUCTION AREA SIGNS.

TRAFFIC HANDLING QUANTITIES

LOCATION	SHEET	CHANNELIZER (SURFACE MOUNTED)	TEMPORARY CRASH CUSHION MODULE TYPE 'TS14'	TEMPORARY RAILING (TYPE K)	TEMPORARY TERMINAL SECTION (TYPE K)	QUICKCHANGE MOVABLE BARRIER	TEMPORARY TRAFFIC STRIPE PAINT 4" WHITE	TEMPORARY TRAFFIC STRIPE PAINT 4" YELLOW	TEMPORARY PAVEMENT MARKERS RETROREFLECTIVE TYPE G	TEMPORARY PAVEMENT MARKERS RETROREFLECTIVE TYPE H	REMOVE THERMOPLASTIC TRAFFIC STRIPE
		EA	EA	LF	EA	LF	LF		EA		LF
3,4,5,6,7,13,27 32,33,34,42	TH-1	77	154	880							
28		14	14	960							
26	TH-2	7	14	160							
35		7	14	80							
PM 9.3/10.2				4200	1	4200	8,400	8,400	89	89	8400
TOTAL		105	196	6280	1	4200	16,800		178		8400

TRAFFIC HANDLING QUANTITIES
THQ-1

REVISED BY | DATE REVISED
DAVID BLACK | FAWZI YAGHMOUR
CALCULATED-DESIGNED BY | CHECKED BY
FUNCTIONAL SUPERVISOR
MOHAMMED QATAMI

STATE OF CALIFORNIA - DEPARTMENT OF TRANSPORTATION
Caltrans® TRAFFIC DESIGN

LAST REVISION 05-20-11 | DATE PLOTTED => 12-AUG-2011 TIME PLOTTED => 11:18

Dist	COUNTY	ROUTE	POST MILES TOTAL PROJECT	SHEET No.	TOTAL SHEETS
05	SCr	1	R0.0/10.2	88	157

REGISTERED CIVIL ENGINEER 06-20-11 DATE

6-20-11
PLANS APPROVAL DATE

REGISTERED PROFESSIONAL ENGINEER FAWZI YAGHMOUR No. C-54750 Exp. 12/31/11 CIVIL STATE OF CALIFORNIA

THE STATE OF CALIFORNIA OR ITS OFFICERS OR AGENTS SHALL NOT BE RESPONSIBLE FOR THE ACCURACY OR COMPLETENESS OF SCANNED COPIES OF THIS PLAN SHEET.

PAVEMENT DELINEATION QUANTITIES

LOCATION	DETAIL No.	PAVEMENT MARKER RETRO-REFLECTIVE TYPE C	PAVEMENT MARKER RETRO-REFLECTIVE TYPE G	PAVEMENT MARKER RETRO-REFLECTIVE TYPE H	PAVEMENT MARKER NON-REFLECTIVE TYPE A	THERMOPLASTIC TRAFFIC STRIPE (SPRAYABLE) 4" WHITE	THERMOPLASTIC TRAFFIC STRIPE (SPRAYABLE) 4" YELLOW	THERMOPLASTIC TRAFFIC STRIPE (SPRAYABLE) 8" WHITE	DELINEATOR (CLASS-1) TYPE F-1	DELINEATOR (CLASS-1) TYPE G-1	OBJECT MARKER (TYPE L, P)
		EA				LF			EA		EA
MAINLINE NB PM R0.0/10.2	11/13		1310		5,238	62,808			11	8	21
	11/14	73			292	3,456					
	25			1119			53,644				
	27B					50,239					
	8					1,795					
MAINLINE SB PM R0.0/10.2	11/13		1238		4,950	59,341			6	13	22
	11/14	100			400		4,752				
	25			1119			53,644				
	37	8	44					747			
	27B					45,909					
	8					1,373					
SUB-TOTAL PDQ-1		181	2592	2238	10,880	224,921	112,040	747	17	21	43

PAVEMENT MARKING

LOCATION	THERMOPLASTIC PAVEMENT MARKING
	SQFT
	CHP SPEED MARKING
SB MAINLINE	120
NB MAINLINE	120
SUB-TOTAL PDQ-1	240

CHP SPEED MEASUREMENT PAVEMENT MARKING DETAIL

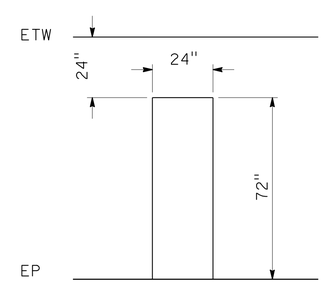

PAVEMENT DELINEATION QUANTITIES
PDQ-1

STATE OF CALIFORNIA - DEPARTMENT OF TRANSPORTATION
Caltrans® TRAFFIC DESIGN

FUNCTIONAL SUPERVISOR: MOHAMMED QATAMI
CALCULATED-DESIGNED BY: DAVID BLACK
CHECKED BY: FAWZI YAGHMOUR
REVISED BY
DATE REVISED

LAST REVISION 05-20-11 | DATE PLOTTED => 12-AUG-2011 | TIME PLOTTED => 11:18

Dist	COUNTY	ROUTE	POST MILES TOTAL PROJECT	SHEET No.	TOTAL SHEETS
05	SCr	1	R0.0/10.2	89	157

REGISTERED CIVIL ENGINEER 06-20-11 DATE

6-20-11
PLANS APPROVAL DATE

REGISTERED PROFESSIONAL ENGINEER FAWZI YAGHMOUR No. C-54750 Exp. 12/31/11 CIVIL STATE OF CALIFORNIA

THE STATE OF CALIFORNIA OR ITS OFFICERS OR AGENTS SHALL NOT BE RESPONSIBLE FOR THE ACCURACY OR COMPLETENESS OF SCANNED COPIES OF THIS PLAN SHEET.

PAVEMENT DELINEATION QUANTITIES

LOCATION	DETAIL No.	PAVEMENT MARKER RETRO-REFLECTIVE		THERMOPLASTIC TRAFFIC STRIPE (SPRAYABLE)			DELINEATOR (CLASS-1)		OBJECT MARKER (TYPE L, P)
		TYPE G	TYPE H	4" WHITE	4" YELLOW	8" WHITE	TYPE F-1	TYPE G-1	
		EA		LF			EA		EA
SCr 1/ 129 PM R0.72	27B			8109			35	40	4
	25A		257		6124				
	36	45				1042			
	36A	21				470			
	38	20				446			
SCr 1/ HARKINS SLOUGH RD PM R2.28	27B			2509			13	13	3
	25A		65		1532				
	36	25				570			
	36A	10				239			
	38	4				59			
SCr 1/ MAIN ST PM R2.7	27B			1869			19	15	4
	25A		56		1317				
	36A	8				570			
	36	26				592			
SUB-TOTAL PDQ-2		159	378	12487	8973	3988	67	68	11

PAVEMENT MARKING

LOCATION	THERMOPLASTIC PAVEMENT MARKING				
	TYPE V ARROW	TYPE III ARROW	TYPE II ARROW	STOP	LIMIT LINE/ HASH
	SQFT				
SCr 1/ 129 INTERCHANGE	165	210	90	44	65
SCr 1/ HARKINS SLOUGH Rd	99	126		44	286
SCr 1/ MAIN St	99				
SUB-TOTAL PDQ-2	363	336	90	88	351

PAVEMENT DELINEATION QUANTITIES

PDQ-2

REVISED BY | DATE REVISED
DAVID BLACK | FAWZI YAGHMOUR
CALCULATED-DESIGNED BY | CHECKED BY
FUNCTIONAL SUPERVISOR: MOHAMMED QATAMI
STATE OF CALIFORNIA - DEPARTMENT OF TRANSPORTATION
Caltrans® TRAFFIC DESIGN

LAST REVISION 06-16-11 | DATE PLOTTED => 12-AUG-2011 TIME PLOTTED => 11:19

Dist	COUNTY	ROUTE	POST MILES TOTAL PROJECT	SHEET No.	TOTAL SHEETS
05	SCr	1	R0.0/10.2	90	157

REGISTERED CIVIL ENGINEER 06-20-11 DATE

6-20-11
PLANS APPROVAL DATE

REGISTERED PROFESSIONAL ENGINEER FAWZI YAGHMOUR No. C-54750 Exp. 12/31/11 CIVIL STATE OF CALIFORNIA

THE STATE OF CALIFORNIA OR ITS OFFICERS OR AGENTS SHALL NOT BE RESPONSIBLE FOR THE ACCURACY OR COMPLETENESS OF SCANNED COPIES OF THIS PLAN SHEET.

PAVEMENT DELINEATION QUANTITIES

LOCATION	DETAIL No.	PAVEMENT MARKER RETRO-REFLECTIVE TYPE G	PAVEMENT MARKER RETRO-REFLECTIVE TYPE H	THERMOPLASTIC TRAFFIC STRIPE (SPRAYABLE) 4" WHITE	THERMOPLASTIC TRAFFIC STRIPE (SPRAYABLE) 4" YELLOW	THERMOPLASTIC TRAFFIC STRIPE (SPRAYABLE) 8" WHITE	DELINEATOR (CLASS-1) TYPE F-1	DELINEATOR (CLASS-1) TYPE G-1	OBJECT MARKER
		EA		LF			EA		EA
SCr 1/ AIRPORT Blvd PM R3.19	27B			3,186			24	34	5
	25A		75		1759				
	36	46				1064			
	36A	16				343			
	38	16				339			
SCr 1/ BUENA VISTA Dr PM R4.11	27B			5,480			30	32	6
	25A		75		1759				
	36	58				1361			
	36A	24				543			
	38	13				288			
SCr 1/ MAR MONT Ave PM R6.72	27B			5,631			34	29	4
	25A		173		4083				
	36	62				1430			
	36A	20				409			
	38	26				572			
SCr1/ VISTA POINT PM R5.82	27B			2,202			12	8	
	25A		40		921				
	36	32				723			
	36A	8				169			
SUB-TOTAL PDQ-3		321	363	16,499	8522	7241	100	103	15

PAVEMENT MARKING

LOCATION	THERMOPLASTIC PAVEMENT MARKING TYPE V ARROW	TYPE III ARROW	TYPE IIIB ARROW	STOP	AHEAD	LIMIT LINE/ HASH	DISABLED PARKING
	SQFT						
SCr 1/ AIRPORT Blvd	198	168	73	66		82	
SCr 1/ BUENA VIST Dr	363	126		88	62	73	
SCr 1/ MAR MONT Ave	297	42		44	62	190	
SCr 1/ VISTA POINT							23
SUB-TOTAL PDQ-3	858	336	73	198	124	345	23

PAVEMENT DELINEATION QUANTITIES

PDQ-3

REVISED BY | DATE REVISED
DAVID BLACK | FAWZI YAGHMOUR
CALCULATED-DESIGNED BY | CHECKED BY
FUNCTIONAL SUPERVISOR: MOHAMMED QATAMI
STATE OF CALIFORNIA - DEPARTMENT OF TRANSPORTATION
Caltrans® TRAFFIC DESIGN

LAST REVISION 05-20-11 | DATE PLOTTED => 12-AUG-2011 | TIME PLOTTED => 11:19

Dist	COUNTY	ROUTE	POST MILES TOTAL PROJECT	SHEET No.	TOTAL SHEETS
05	SCr	1	R0.0/10.2	91	157

REGISTERED CIVIL ENGINEER 06-20-11 DATE

6-20-11
PLANS APPROVAL DATE

REGISTERED PROFESSIONAL ENGINEER FAWZI YAGHMOUR No. C-54750 Exp. 12/31/11 CIVIL STATE OF CALIFORNIA

THE STATE OF CALIFORNIA OR ITS OFFICERS OR AGENTS SHALL NOT BE RESPONSIBLE FOR THE ACCURACY OR COMPLETENESS OF SCANNED COPIES OF THIS PLAN SHEET.

PAVEMENT DELINEATION QUANTITIES

LOCATION	DETAIL No.	PAVEMENT MARKER RETRO-REFLECTIVE TYPE G	PAVEMENT MARKER RETRO-REFLECTIVE TYPE H	THERMOPLASTIC TRAFFIC STRIPE (SPRAYABLE) 4" WHITE	THERMOPLASTIC TRAFFIC STRIPE (SPRAYABLE) 4" YELLOW	THERMOPLASTIC TRAFFIC STRIPE (SPRAYABLE) 8" WHITE	DELINEATOR (CLASS-1) TYPE F-1	DELINEATOR (CLASS-1) TYPE G-1	OBJECT MARKER (TYPE L, P)
		EA		LF			EA		EA
SCr 1/ SAN ANDREAS Rd PM R7.72	27B			3976			32	39	4
	25A		138		3269				
	36	60				1392			
	36A	26				563			
	38	18				384			
SCr 1/ ROB ROY OC PM R8.42	27B			4802			26	24	5
	25A		126		2988				
	36	50				1174			
	36A	16				347			
	38	42				983			
SCr 1/ RIO DEL MAR Blvd PM R9.42	27B			4749			33	27	
	25A		146		3465				
	36	62				996			
	36A	16				335			
	38	40				894			
SUB-TOTAL PDQ-4		330	410	13527	9722	7068	91	90	9

PAVEMENT DELINEATION QUANTITIES

LOCATION	PAVEMENT MARKER RETRO-REFLECTIVE TYPE C	PAVEMENT MARKER RETRO-REFLECTIVE TYPE G	PAVEMENT MARKER RETRO-REFLECTIVE TYPE H	PAVEMENT MARKER NON-REFLECTIVE TYPE A	THERMOPLASTIC TRAFFIC STRIPE (SPRAYABLE) 4" WHITE	THERMOPLASTIC TRAFFIC STRIPE (SPRAYABLE) 4" YELLOW	THERMOPLASTIC TRAFFIC STRIPE (SPRAYABLE) 8" WHITE	DELINEATOR (CLASS-1) TYPE F-1	DELINEATOR (CLASS-1) TYPE G-1	OBJECT MARKER
	EA				LF			EA		EA
SUB-TOTAL PDQ-1	181	2592	2238	10,880	224,921	112,040	747	17	21	43
SUB-TOTAL PDQ-2		159	378		12,487	8,973	3,988	67	68	11
SUB-TOTAL PDQ-3		321	363		16,499	8,522	7,241	100	103	15
SUB-TOTAL PDQ-4		330	410		13,527	9,722	7,068	91	90	9
TOTAL PDQ	6972			10,880	425,735			557		78

PAVEMENT MARKING

LOCATION	THERMOPLASTIC PAVEMENT MARKING TYPE V ARROW	TYPE III ARROW	TYPE II ARROW	TYPE IIIB ARROW	STOP	AHEAD	CHP SPEED MARKING	LIMIT LINE/ HASH/ X-WALK	DISABLED PARKING
	SQFT								
SCr 1/ SAN ANDREAS Rd	363	84			88	62		60	
SCr 1/ ROB ROY OC	363	168			88	62		57	
SCr 1/ MAR MONT Ave	198	504			44	62		265	
SUB-TOTAL PDQ-4	924	756			220	186		382	
SUB-TOTAL PDQ-1							240		
SUB-TOTAL PDQ-2	363	336	90		88			351	
SUB-TOTAL PDQ-3	858	336		73	198	124		345	23
TOTAL PDQ	8361								

PAVEMENT DELINEATION QUANTITIES

PDQ-4

REVISED BY | DATE REVISED
DAVID BLACK | FAWZI YAGHMOUR
CALCULATED-DESIGNED BY | CHECKED BY
FUNCTIONAL SUPERVISOR: MOHAMMED QATAMI

STATE OF CALIFORNIA - DEPARTMENT OF TRANSPORTATION
Caltrans® TRAFFIC DESIGN

LAST REVISION 06-16-11 | DATE PLOTTED => 12-AUG-2011 | TIME PLOTTED => 11:19

Dist	COUNTY	ROUTE	POST MILES TOTAL PROJECT	SHEET No.	TOTAL SHEETS
05	SCr	1	R0.0/10.2	92	157

REGISTERED CIVIL ENGINEER 06-20-11 DATE

6-20-11
PLANS APPROVAL DATE

REGISTERED PROFESSIONAL ENGINEER FAWZI YAGHMOUR No. C-54750 Exp. 12/31/11 CIVIL STATE OF CALIFORNIA

THE STATE OF CALIFORNIA OR ITS OFFICERS OR AGENTS SHALL NOT BE RESPONSIBLE FOR THE ACCURACY OR COMPLETENESS OF SCANNED COPIES OF THIS PLAN SHEET.

LEGEND

- ROADSIDE SIGN (ONE OR TWO POST)
- (X) ROADSIDE SIGN (WITH NUMBER)
- ROADESIDE SIGN SINGLE POST
- ROADESIDE SIGN TWO POST

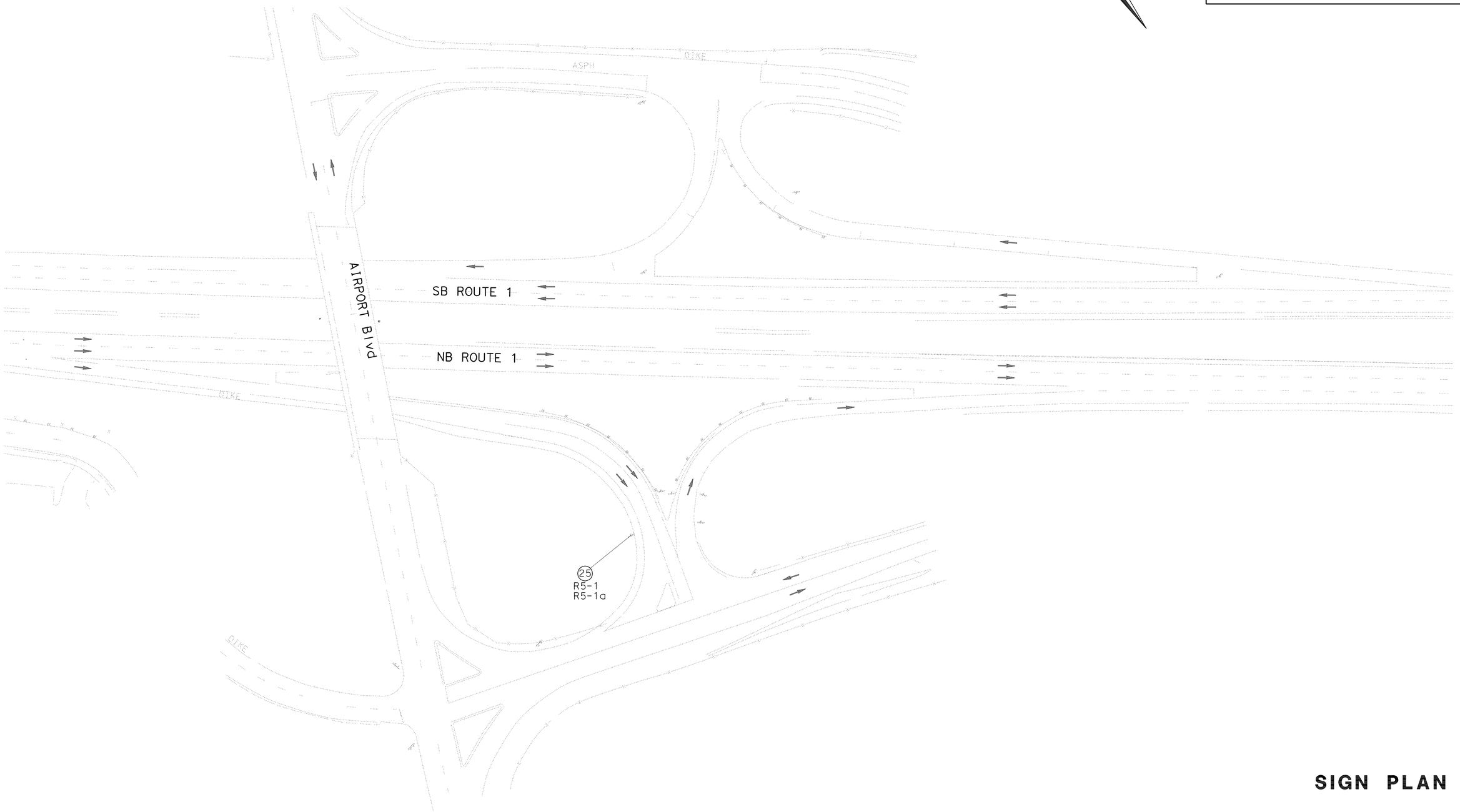

EXISTING UTILITY FACILITIES HAVE NOT BEEN PLOTTED ON THESE PLANS

THIS PLAN ACCURATE FOR SIGN PLAN ONLY

SCALE 1"=50'

SIGN PLAN

S-1

STATE OF CALIFORNIA - DEPARTMENT OF TRANSPORTATION
Caltrans® **TRAFFIC DESIGN**

FUNCTIONAL SUPERVISOR: MOHAMMED QATAMI

CALCULATED-DESIGNED BY: FAWZI YAGHMOUR
CHECKED BY: DAVID BLACK

REVISED BY | DATE REVISED

LAST REVISION 05-20-11 | DATE PLOTTED => 12-AUG-2011 | TIME PLOTTED => 11:19

Dist	COUNTY	ROUTE	POST MILES TOTAL PROJECT	SHEET No.	TOTAL SHEETS
05	SCr	1	R0.0/10.2	93	157

REGISTERED CIVIL ENGINEER 06-20-11 DATE

6-20-11
PLANS APPROVAL DATE

REGISTERED PROFESSIONAL ENGINEER FAWZI YAGHMOUR No. C-54750 Exp. 12/31/11 CIVIL STATE OF CALIFORNIA

THE STATE OF CALIFORNIA OR ITS OFFICERS OR AGENTS SHALL NOT BE RESPONSIBLE FOR THE ACCURACY OR COMPLETENESS OF SCANNED COPIES OF THIS PLAN SHEET.

LEGEND

⬢ REPLACE EXISTING SIGN PANELS

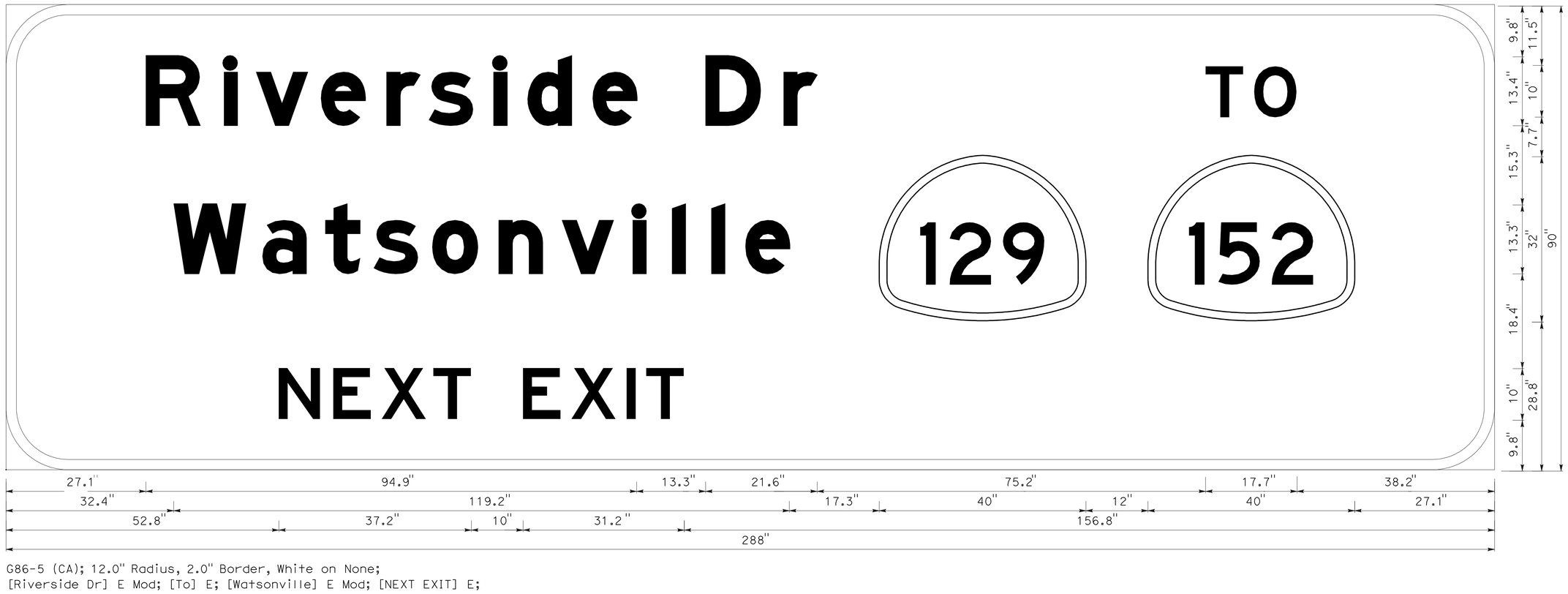

(1) ⬢ G86-5 (CA); 12.0" Radius, 2.0" Border, White on None;
[Riverside Dr] E Mod; [To] E; [Watsonville] E Mod; [NEXT EXIT] E;

SIGN DETAILS
SD-1

THIS PLAN ACCURATE FOR SIGN PLAN ONLY

NO SCALE

STATE OF CALIFORNIA - DEPARTMENT OF TRANSPORTATION
Caltrans® TRAFFIC DESIGN

FUNCTIONAL SUPERVISOR: MOHAMMED QATAMI
CALCULATED-DESIGNED BY: DAVID BLACK
CHECKED BY: FAWZI YAGHMOUR
REVISED BY
DATE REVISED

LAST REVISION 05-20-11 | DATE PLOTTED => 12-AUG-2011 | TIME PLOTTED => 11:19

Dist	COUNTY	ROUTE	POST MILES TOTAL PROJECT	SHEET No.	TOTAL SHEETS
05	SCr	1	R0.0/10.2	94	157

REGISTERED CIVIL ENGINEER 06-20-11 DATE

6-20-11
PLANS APPROVAL DATE

REGISTERED PROFESSIONAL ENGINEER FAWZI YAGHMOUR No. C-54750 Exp. 12/31/11 CIVIL STATE OF CALIFORNIA

THE STATE OF CALIFORNIA OR ITS OFFICERS OR AGENTS SHALL NOT BE RESPONSIBLE FOR THE ACCURACY OR COMPLETENESS OF SCANNED COPIES OF THIS PLAN SHEET.

6.0" Radius, 2.0" Border, White on Green;

[EXIT] E; [425] E;

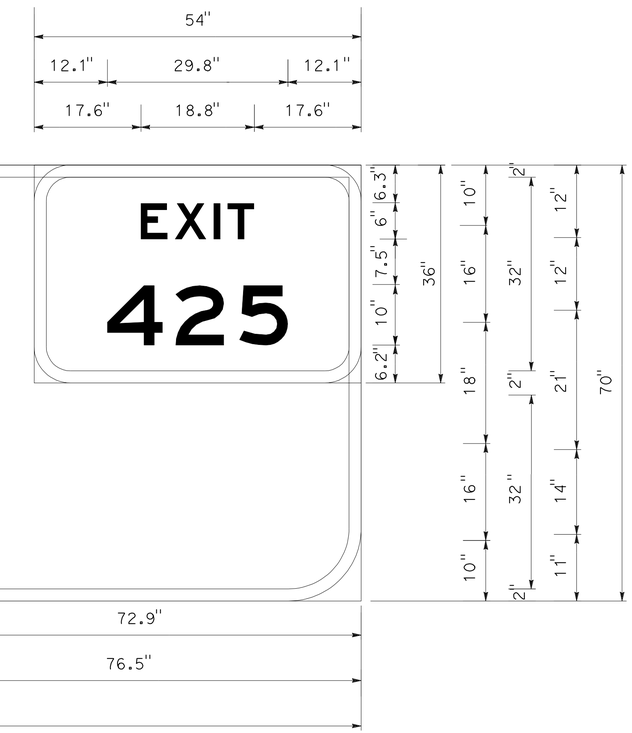

G85-11 (CA); 12.0" Radius, 2.0" Border, White on Green;

[Riverside Dr] E Mod; [TO] E; [Watsonville] E Mod; Arrow 10.67UC-1L - 17.3" 45{;

2

THIS PLAN ACCURATE FOR SIGN PLAN ONLY

SIGN DETAILS
SD-2

NO SCALE

STATE OF CALIFORNIA - DEPARTMENT OF TRANSPORTATION
Caltrans® TRAFFIC DESIGN

FUNCTIONAL SUPERVISOR: MOHAMMED QATAMI
CALCULATED-DESIGNED BY: DAVID BLACK
CHECKED BY: FAWZI YAGHMOUR
REVISED BY
DATE REVISED

LAST REVISION 05-20-11
DATE PLOTTED => 12-AUG-2011
TIME PLOTTED => 11:19

Dist	COUNTY	ROUTE	POST MILES TOTAL PROJECT	SHEET No.	TOTAL SHEETS
05	SCr	1	R0.0/10.2	95	157

REGISTERED CIVIL ENGINEER — DATE 06-20-11

6-20-11
PLANS APPROVAL DATE

REGISTERED PROFESSIONAL ENGINEER — FAWZI YAGHMOUR — No. C-54750 — Exp. 12/31/11 — CIVIL — STATE OF CALIFORNIA

THE STATE OF CALIFORNIA OR ITS OFFICERS OR AGENTS SHALL NOT BE RESPONSIBLE FOR THE ACCURACY OR COMPLETENESS OF SCANNED COPIES OF THIS PLAN SHEET.

6.0" Radius, 3.0" Border, White on Green;
[EXIT] E; [426] E;

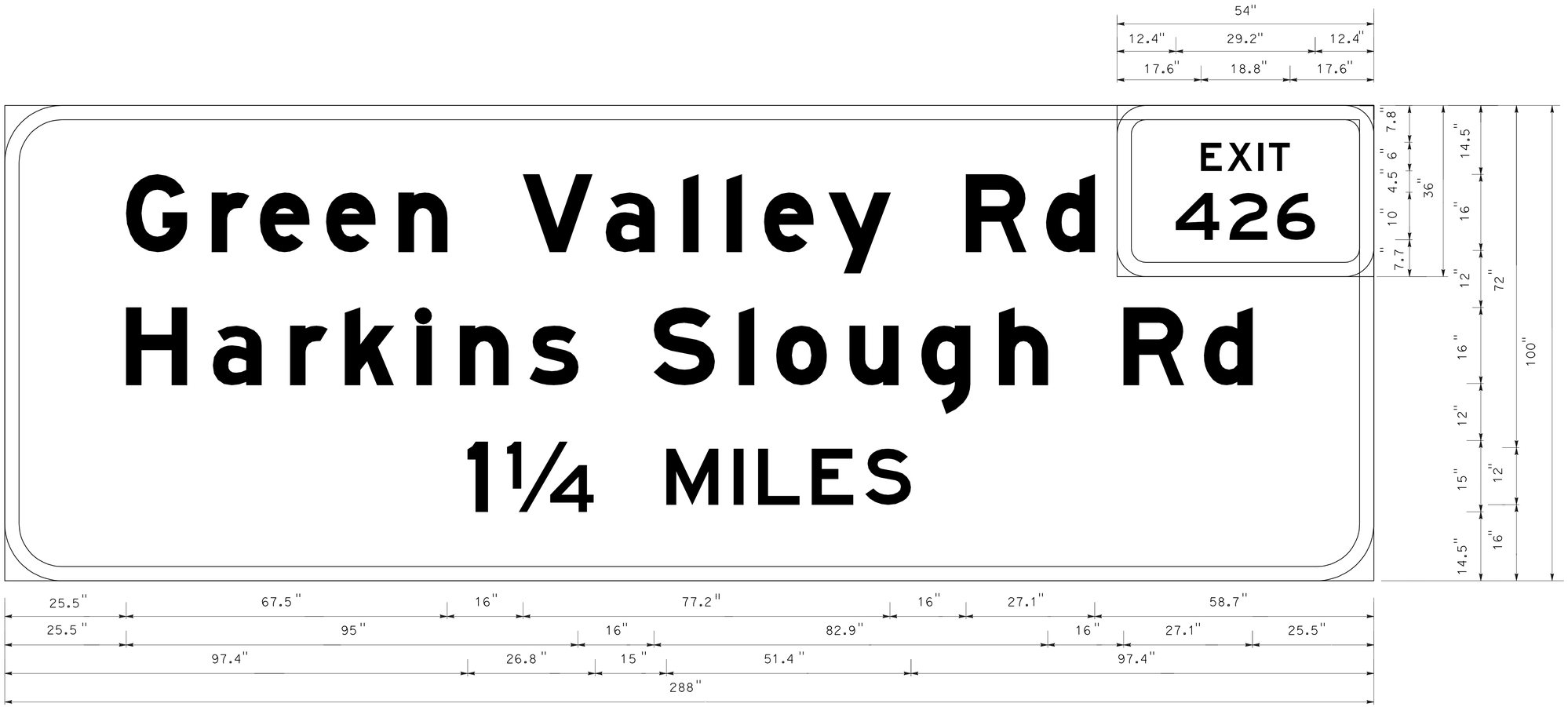

(3) G83-5(CA)12.0" Radius, 3.0" Border, White on Green;
[Green Valley Rd] E Mod; [Harkins Slough Rd] E Mod; [1 51/64 MILES] E;

THIS PLAN ACCURATE FOR SIGN PLAN ONLY

SIGN DETAILS
SD-3

NO SCALE

STATE OF CALIFORNIA - DEPARTMENT OF TRANSPORTATION
Caltrans® TRAFFIC DESIGN

FUNCTIONAL SUPERVISOR: MOHAMMED QATAMI
CALCULATED-DESIGNED BY: FAWZI YAGHMOUR
CHECKED BY: DAVID BLACK
REVISED BY
DATE REVISED

LAST REVISION 05-20-11 | DATE PLOTTED => 12-AUG-2011 | TIME PLOTTED => 11:19

Dist	COUNTY	ROUTE	POST MILES TOTAL PROJECT	SHEET No.	TOTAL SHEETS
05	SCr	1	R0.0/10.2	96	157

REGISTERED CIVIL ENGINEER 06-20-11 DATE

6-20-11
PLANS APPROVAL DATE

REGISTERED PROFESSIONAL ENGINEER FAWZI YAGHMOUR No. C-54750 Exp. 12/31/11 CIVIL STATE OF CALIFORNIA

THE STATE OF CALIFORNIA OR ITS OFFICERS OR AGENTS SHALL NOT BE RESPONSIBLE FOR THE ACCURACY OR COMPLETENESS OF SCANNED COPIES OF THIS PLAN SHEET.

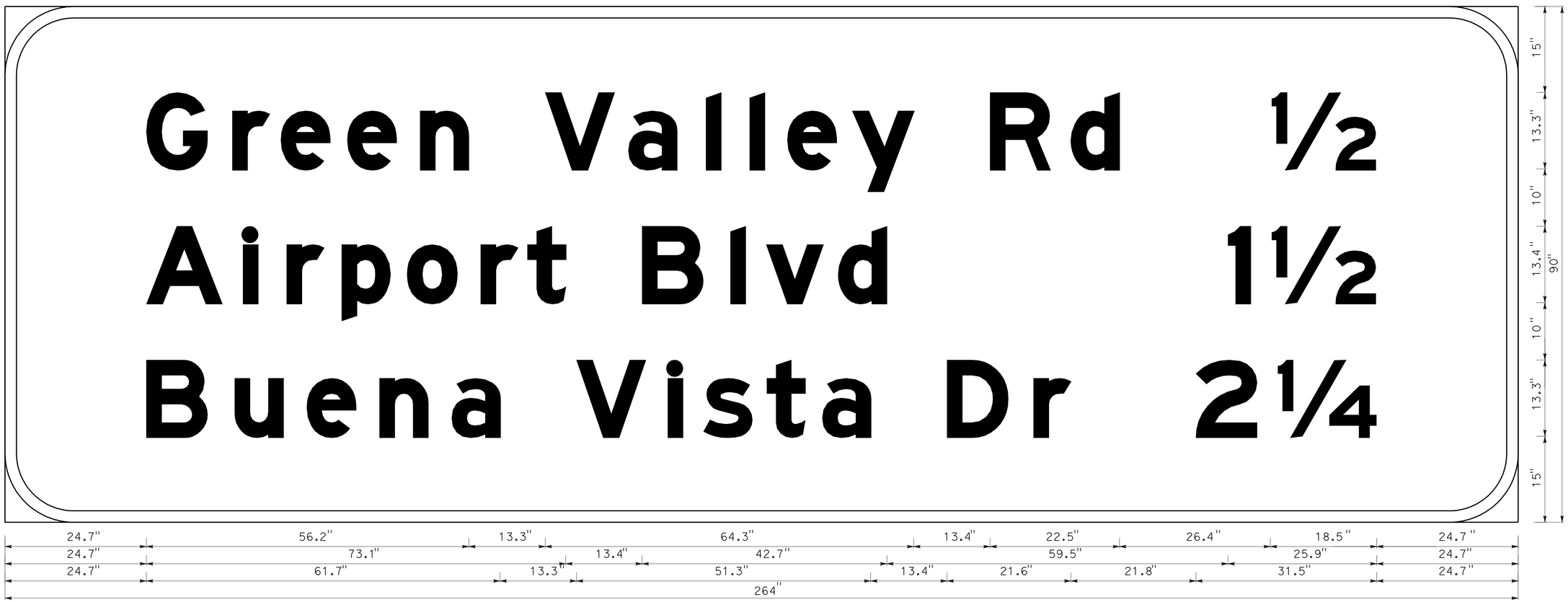

G23-1(CA); 12.0" Radius, 2.0" Border, White on Green;
[Green Valley Rd] E Mod; [5/64] E Mod; [Airport Blvd] E Mod; [1 59/64] E Mod; [Buena Vista Dr] E Mod; [2 57/64] E Mod;

(4)

SIGN DETAILS
SD-4

THIS PLAN ACCURATE FOR SIGN PLAN ONLY

NO SCALE

STATE OF CALIFORNIA - DEPARTMENT OF TRANSPORTATION
Caltrans TRAFFIC DESIGN

FUNCTIONAL SUPERVISOR: MOHAMMED QATAMI
CALCULATED-DESIGNED BY: FAWZI YAGHMOUR
CHECKED BY: DAVID BLACK
REVISED BY
DATE REVISED

LAST REVISION 05-20-11
DATE PLOTTED => 12-AUG-2011
TIME PLOTTED => 11:19

Dist	COUNTY	ROUTE	POST MILES TOTAL PROJECT	SHEET No.	TOTAL SHEETS
05	SCr	1	R0.0/10.2	97	157

REGISTERED CIVIL ENGINEER 06-20-11 DATE

6-20-11
PLANS APPROVAL DATE

REGISTERED PROFESSIONAL ENGINEER FAWZI YAGHMOUR No. C-54750 Exp. 12/31/11 CIVIL STATE OF CALIFORNIA

THE STATE OF CALIFORNIA OR ITS OFFICERS OR AGENTS SHALL NOT BE RESPONSIBLE FOR THE ACCURACY OR COMPLETENESS OF SCANNED COPIES OF THIS PLAN SHEET.

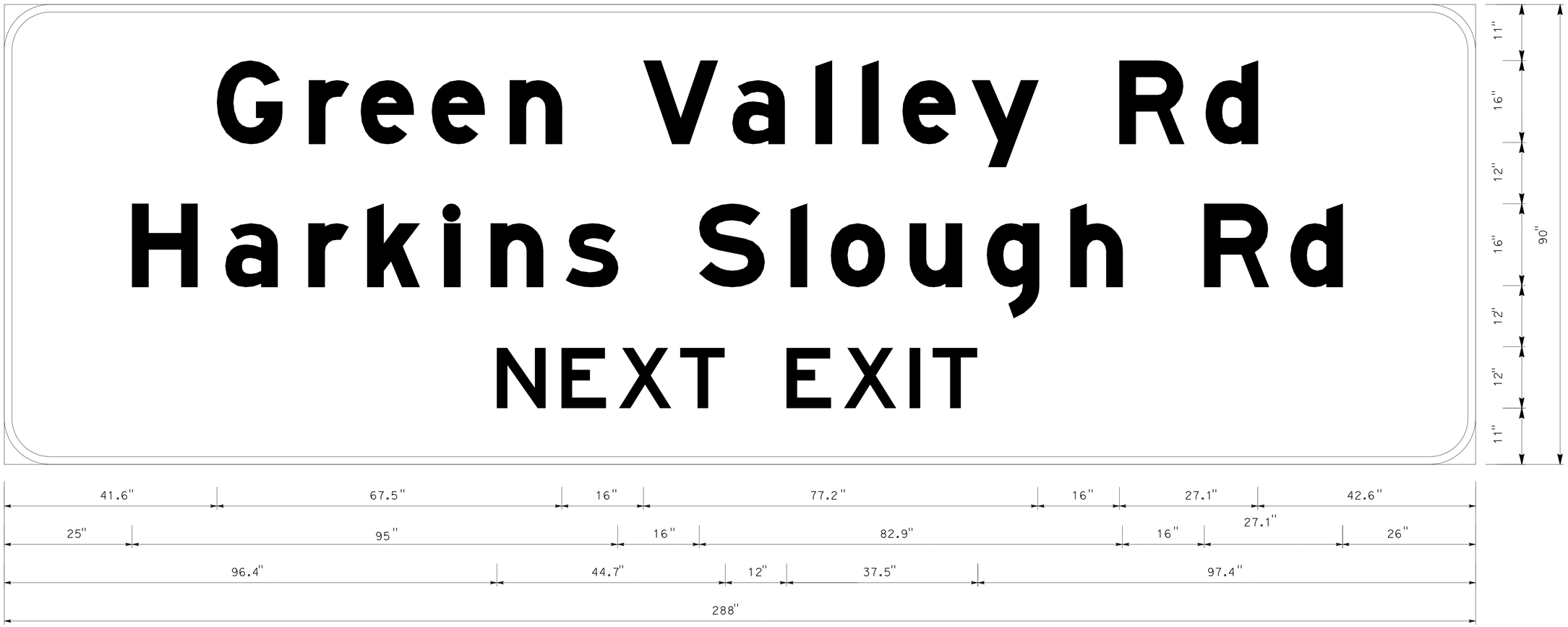

(5) G86-5 (CA); 9.0" Radius, 1.5" Border, White on Green;

[Green Valley Rd] E Mod; [Harkins Slough Rd] E Mod; [NEXT EXIT] E;

SIGN DETAILS
SD-5

NO SCALE

THIS PLAN ACCURATE FOR SIGN PLAN ONLY

STATE OF CALIFORNIA - DEPARTMENT OF TRANSPORTATION
Caltrans® TRAFFIC DESIGN

FUNCTIONAL SUPERVISOR: MOHAMMED QATAMI
CALCULATED-DESIGNED BY: DAVID BLACK
CHECKED BY: FAWZI YAGHMOUR
REVISED BY
DATE REVISED

LAST REVISION 05-20-11
DATE PLOTTED => 12-AUG-2011
TIME PLOTTED => 11:19

Dist	COUNTY	ROUTE	POST MILES TOTAL PROJECT	SHEET No.	TOTAL SHEETS
05	SCr	1	R0.0/10.2	98	157

REGISTERED CIVIL ENGINEER — DATE 06-20-11

6-20-11
PLANS APPROVAL DATE

REGISTERED PROFESSIONAL ENGINEER — FAWZI YAGHMOUR — No. C-54750 — Exp. 12/31/11 — CIVIL — STATE OF CALIFORNIA

THE STATE OF CALIFORNIA OR ITS OFFICERS OR AGENTS SHALL NOT BE RESPONSIBLE FOR THE ACCURACY OR COMPLETENESS OF SCANNED COPIES OF THIS PLAN SHEET.

6.0" Radius, 2.0" Border, White on Green;
[EXIT 426] E;

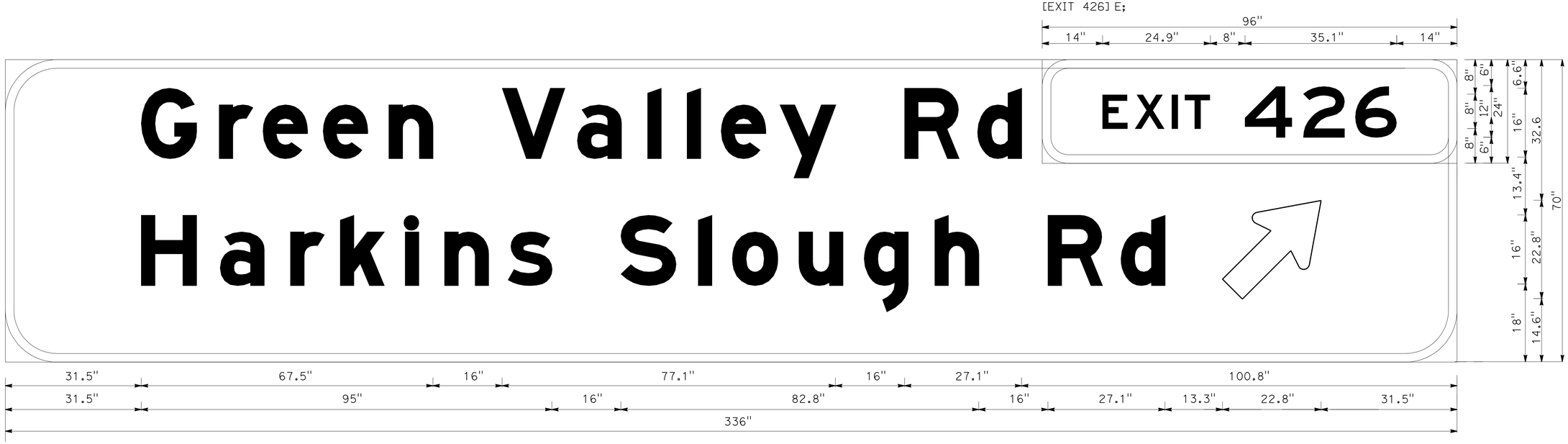

(6) G83-5 (CA); 12.0" Radius, 2.0" Border, White on Green;
[Green Valley Rd] E Mod; [Harkins Slough Rd] E Mod; Standard Arrow Custom 29.0" X 17.6" 45

SIGN DETAILS
SD-6

THIS PLAN ACCURATE FOR SIGN PLAN ONLY

NO SCALE

STATE OF CALIFORNIA - DEPARTMENT OF TRANSPORTATION
Caltrans® TRAFFIC DESIGN

FUNCTIONAL SUPERVISOR: MOHAMMED QATAMI
CALCULATED-DESIGNED BY: DAVID BLACK
CHECKED BY: FAWZI YAGHMOUR
REVISED BY
DATE REVISED

LAST REVISION: 05-20-11
DATE PLOTTED => 12-AUG-2011
TIME PLOTTED => 11:19

Dist	COUNTY	ROUTE	POST MILES TOTAL PROJECT	SHEET No.	TOTAL SHEETS
05	SCr	1	R0.0/10.2	99	157

REGISTERED CIVIL ENGINEER — DATE 06-20-11

6-20-11
PLANS APPROVAL DATE

REGISTERED PROFESSIONAL ENGINEER — FAWZI YAGHMOUR — No. C-54750 — Exp. 12/31/11 — CIVIL — STATE OF CALIFORNIA

THE STATE OF CALIFORNIA OR ITS OFFICERS OR AGENTS SHALL NOT BE RESPONSIBLE FOR THE ACCURACY OR COMPLETENESS OF SCANNED COPIES OF THIS PLAN SHEET.

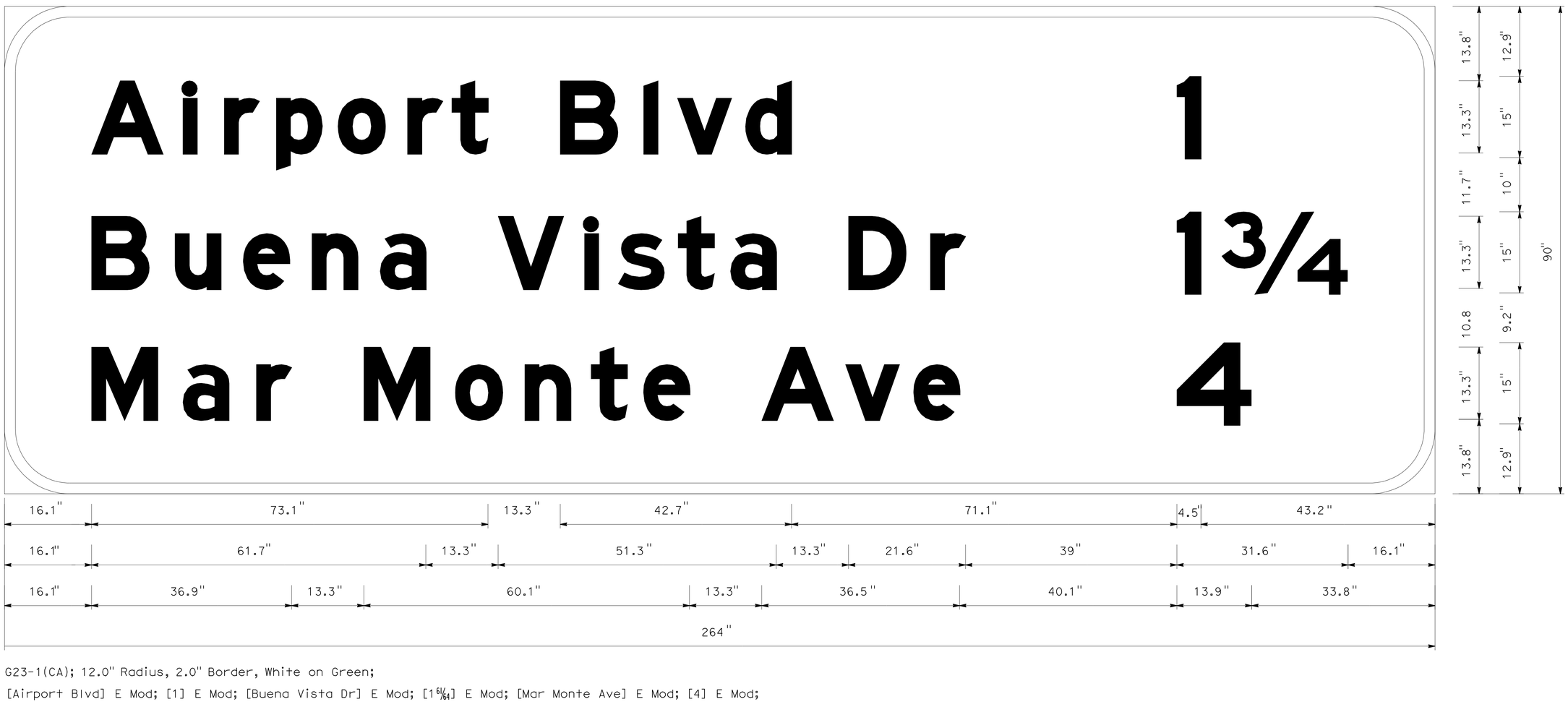

(7) G23-1(CA); 12.0" Radius, 2.0" Border, White on Green;
[Airport Blvd] E Mod; [1] E Mod; [Buena Vista Dr] E Mod; [1 6/64] E Mod; [Mar Monte Ave] E Mod; [4] E Mod;

SIGN DETAILS
SD-7

THIS PLAN IS ACCURATE FOR SIGN PLAN ONLY

NO SCALE

STATE OF CALIFORNIA - DEPARTMENT OF TRANSPORTATION
Caltrans® TRAFFIC DESIGN

FUNCTIONAL SUPERVISOR: MOHAMMED QATAMI
CALCULATED-DESIGNED BY: DAVID BLACK
CHECKED BY: FAWZI YAGHMOUR
REVISED BY
DATE REVISED

LAST REVISION 05-20-11 | DATE PLOTTED => 12-AUG-2011 | TIME PLOTTED => 11:20

Dist	COUNTY	ROUTE	POST MILES TOTAL PROJECT	SHEET No.	TOTAL SHEETS
05	SCr	1	R0.0/10.2	100	157

REGISTERED CIVIL ENGINEER 06-20-11 DATE

6-20-11
PLANS APPROVAL DATE

REGISTERED PROFESSIONAL ENGINEER FAWZI YAGHMOUR No. C-54750 Exp. 12/31/11 CIVIL STATE OF CALIFORNIA

THE STATE OF CALIFORNIA OR ITS OFFICERS OR AGENTS SHALL NOT BE RESPONSIBLE FOR THE ACCURACY OR COMPLETENESS OF SCANNED COPIES OF THIS PLAN SHEET.

6.0" Radius, 2.0" Border, White on Green;
[EXIT 427] E;

(8) G83-5 (CA); 9.0" Radius, 2.0" Border, White on Green;
[Airport Blvd] E Mod; [6/64 MILE] E;

(9)

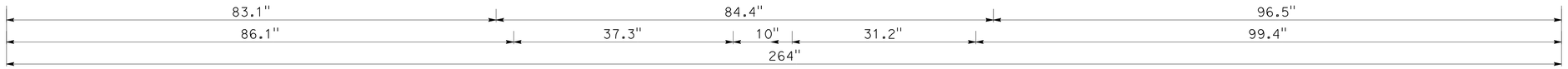

G86-5; 12.0" Radius, 2.0" Border, White on Green;
[Freedom] E Mod; [NEXT EXIT] E;

THIS PLAN ACCURATE FOR SIGN PLAN ONLY

NO SCALE

SIGN DETAILS
SD-8

STATE OF CALIFORNIA - DEPARTMENT OF TRANSPORTATION
Caltrans® TRAFFIC DESIGN

FUNCTIONAL SUPERVISOR: MOHAMMED QATAMI
CALCULATED-DESIGNED BY: DAVID BLACK
CHECKED BY: FAWZI YAGHMOUR
REVISED BY
DATE REVISED

LAST REVISION 05-20-11
DATE PLOTTED => 12-AUG-2011
TIME PLOTTED => 11:20