ACHSSTP-P001(549)E

Dist	COUNTY	ROUTE	POST MILES TOTAL PROJECT	SHEET No.	TOTAL SHEETS
05	SLO	1	9.5/10.0	1	40

INDEX OF PLANS

SHEET No.	DESCRIPTION
1	TITLE AND LOCATION MAP
2	TYPICAL CROSS SECTIONS
3-4	LAYOUTS
5-6	EROSION CONTROL
7-21	DRAINAGE PLANS, PROFILES, DETAILS AND QUANTITIES
22	CONSTRUCTION AREA SIGNS
23-24	DETOUR PLAN AND QUANTITIES
25	PAVEMENT DELINEATION PLANS
26	SUMMARY OF QUANTITIES
27-40	REVISED AND NEW STANDARD PLANS

THE STANDARD PLANS LIST APPLICABLE TO THIS CONTRACT IS INCLUDED IN THE NOTICE TO BIDDERS AND SPECIAL PROVISIONS BOOK.

STATE OF CALIFORNIA

DEPARTMENT OF TRANSPORTATION

PROJECT PLANS FOR CONSTRUCTION ON

STATE HIGHWAY

IN SAN LUIS OBISPO COUNTY
NEAR OCEANO
FROM 0.4 MILE NORTH OF HALCYON ROAD
TO 0.3 MILE SOUTH OF LOS BERROS CREEK BRIDGE

TO BE SUPPLEMENTED BY STANDARD PLANS DATED MAY 2006

LOCATION MAP

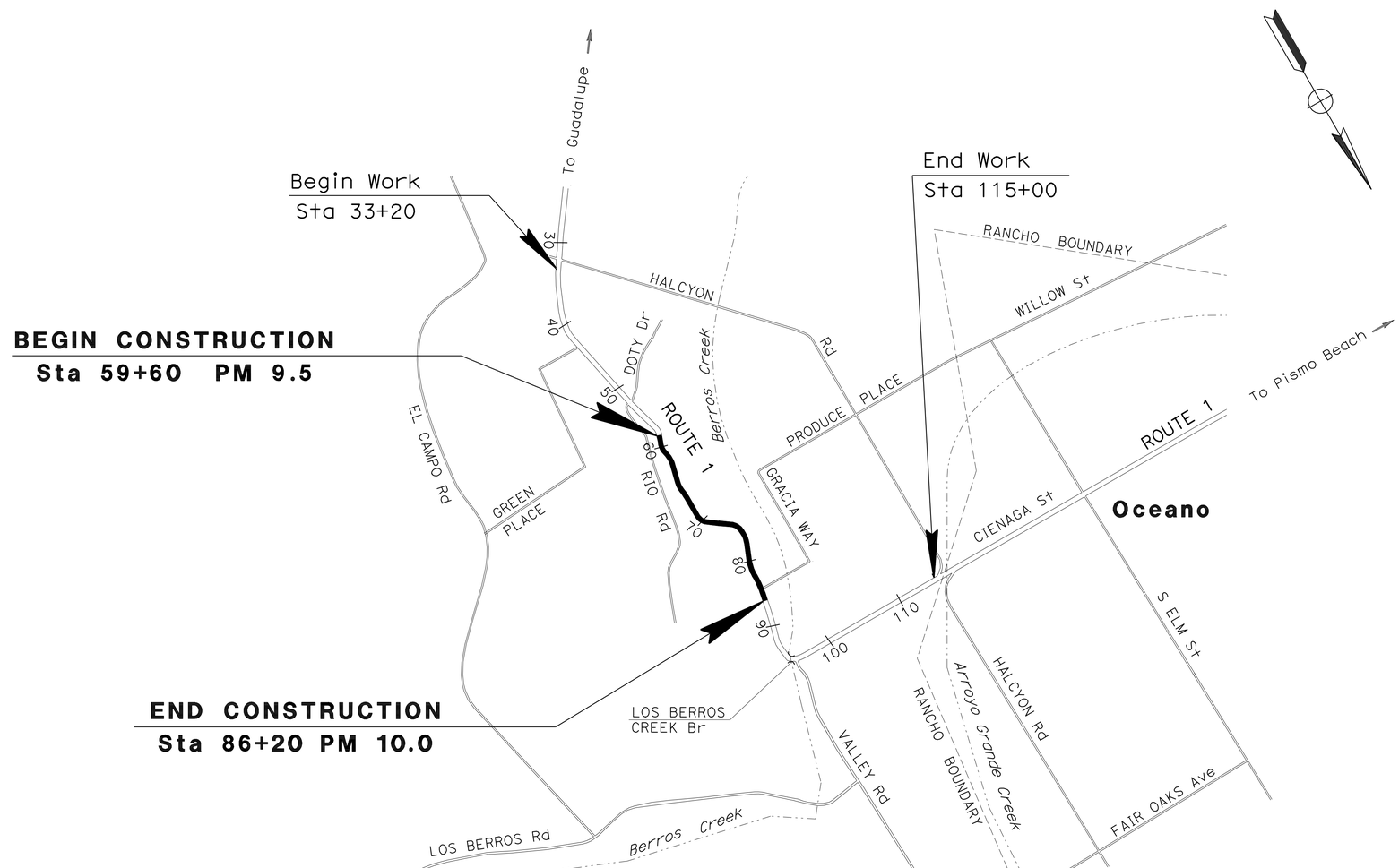

NO SCALE

PROJECT MANAGER: JAMES ESPINOSA

DESIGN ENGINEER: DAVID FAPP

THE CONTRACTOR SHALL POSSESS THE CLASS (OR CLASSES) OF LICENSE AS SPECIFIED IN THE "NOTICE TO BIDDERS."

James Espinosa 12-28-09
PROJECT ENGINEER DATE
REGISTERED CIVIL ENGINEER

May 10, 2010
PLANS APPROVAL DATE

REGISTERED PROFESSIONAL ENGINEER JAMES ESPINOSA No. 54100 Exp. 12/31/11 CIVIL STATE OF CALIFORNIA

THE STATE OF CALIFORNIA OR ITS OFFICERS OR AGENTS SHALL NOT BE RESPONSIBLE FOR THE ACCURACY OR COMPLETENESS OF SCANNED COPIES OF THIS PLAN SHEET.

CONTRACT No. 05-0L2204

LAST REVISION 12-28-09 | DATE PLOTTED => 26-MAY-2010 | TIME PLOTTED => 13:22

Dist	COUNTY	ROUTE	POST MILES TOTAL PROJECT	SHEET No.	TOTAL SHEETS
05	SLO	1	9.5/10.0	2	40

REGISTERED CIVIL ENGINEER 5-03-10 DATE

5-10-10
PLANS APPROVAL DATE

REGISTERED PROFESSIONAL ENGINEER JAMES ESPINOSA No. 54100 Exp. 12/31/11 CIVIL STATE OF CALIFORNIA

THE STATE OF CALIFORNIA OR ITS OFFICERS OR AGENTS SHALL NOT BE RESPONSIBLE FOR THE ACCURACY OR COMPLETENESS OF SCANNED COPIES OF THIS PLAN SHEET.

NOTES:
1. DIMENSIONS OF STRUCTURAL SECTIONS ARE SUBJECT TO TOLERANCES SPECIFIED IN THE STANDARD SPECIFICATIONS.
2. SUPERELEVATION AS SHOWN OR AS DIRECTED BY THE ENGINEER.
3. SEE DRAINAGE PLAN AND DRAINAGE PROFILE SHEETS FOR THE LIMITS OF APC AND HDPE.
4. SEE LAYOUT SHEET L-1 FOR LIMITS OF RECONSTRUCT MBGR (STEEL POST), REMOVE AC DIKE, AND HMA DIKE (TYPE F).

DESIGN DESIGNATION (ROUTE 1)

2004 ADT=5200 D=60%

2024 ADT=8200 T=7%

DHV=1000 V=55 mph

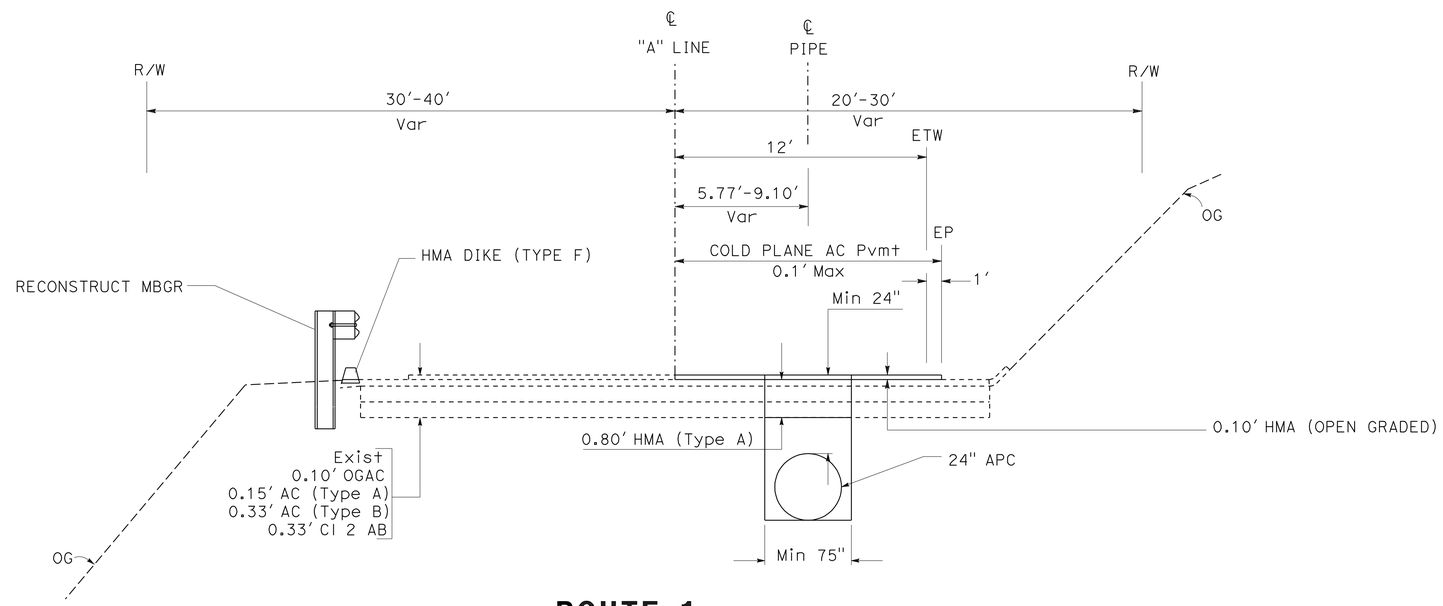

ROUTE 1

Sta 59+60 TO 65+40

TYPICAL CROSS SECTIONS

NO SCALE

X-1

STATE OF CALIFORNIA - DEPARTMENT OF TRANSPORTATION

Caltrans

06 - DESIGN

FUNCTIONAL SUPERVISOR: DAVID FAPP

CALCULATED-DESIGNED BY: ABRANA NARANJO

CHECKED BY: JAMES ESPINOSA

REVISED BY

DATE REVISED

LAST REVISION 04-08-10

DATE PLOTTED => 12-MAY-2010
TIME PLOTTED => 10:05

Dist	COUNTY	ROUTE	POST MILES TOTAL PROJECT	SHEET No.	TOTAL SHEETS
05	SLO	1	9.5/10.0	3	40

REGISTERED CIVIL ENGINEER 5-03-10 DATE

5-10-10
PLANS APPROVAL DATE

REGISTERED PROFESSIONAL ENGINEER JAMES ESPINOSA No. 54100 Exp. 12/31/11 CIVIL STATE OF CALIFORNIA

THE STATE OF CALIFORNIA OR ITS OFFICERS OR AGENTS SHALL NOT BE RESPONSIBLE FOR THE ACCURACY OR COMPLETENESS OF SCANNED COPIES OF THIS PLAN SHEET.

NOTE: FOR ACCURATE RIGHT OF WAY AND ACCESS DATA, CONTACT RIGHT OF WAY ENGINEERING AT DISTRICT OFFICE.

CURVE DATA

No.	R	Δ	T	L
1	360.89′	25°55′49″	83.09′	163.33′
2	223.10′	28°34′37″	56.82′	111.27′
3	347.76′	18°30′35″	56.67′	112.35′
4	393.74′	16°59′51″	58.84′	116.81′
5	1476.37′	3°56′49″	50.87′	101.70′
6	229.66′	55°3′27″	119.70′	220.69′

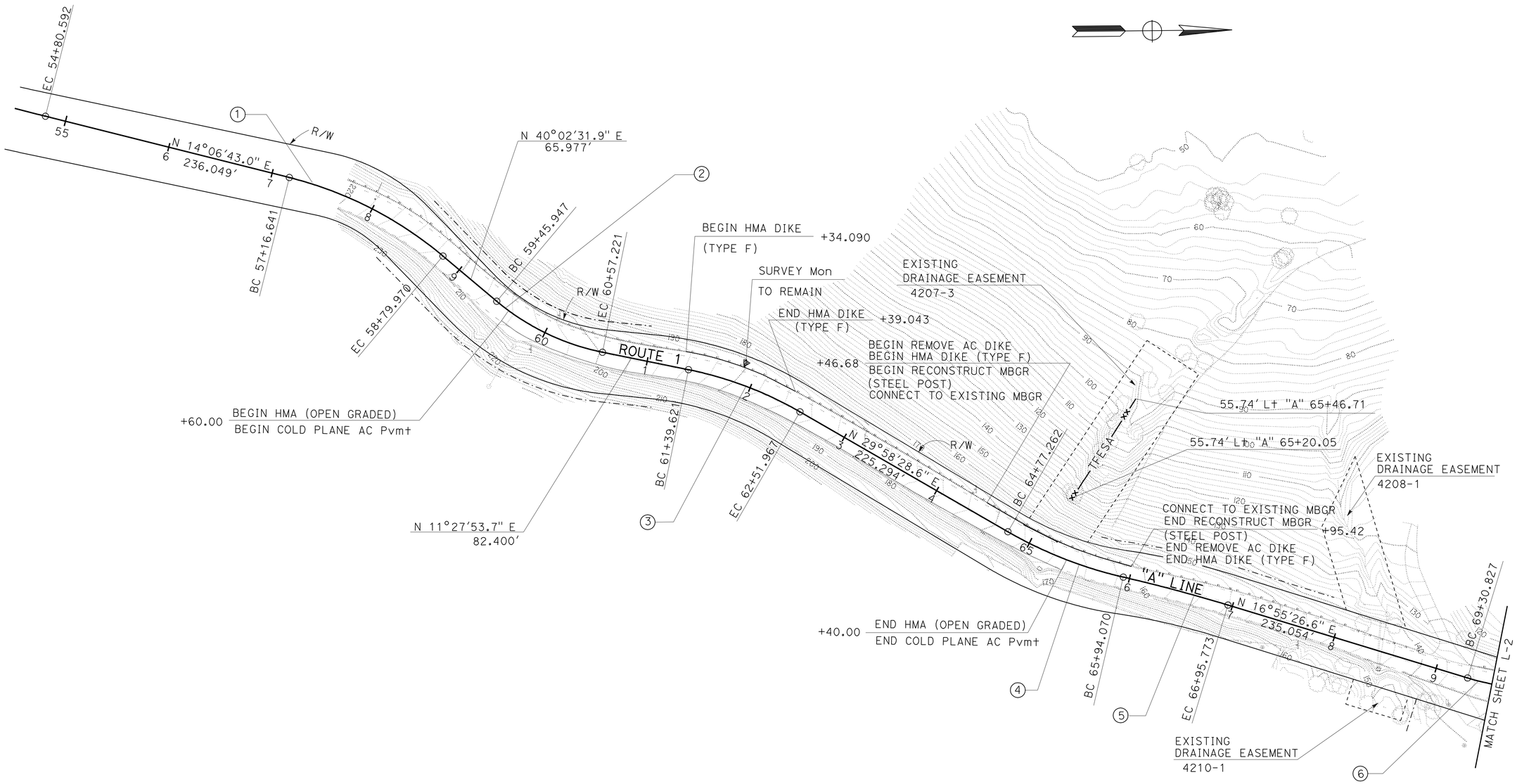

LAYOUT L-1

SCALE: 1″ = 50′

STATE OF CALIFORNIA - DEPARTMENT OF TRANSPORTATION
06 - DESIGN
Caltrans

FUNCTIONAL SUPERVISOR: DAVID FAPP
CALCULATED-DESIGNED BY: ABRANA NARANJO
CHECKED BY: JAMES ESPINOSA
REVISED BY
DATE REVISED

LAST REVISION 04-06-10
DATE PLOTTED => 26-MAY-2010
TIME PLOTTED => 13:26

Dist	COUNTY	ROUTE	POST MILES TOTAL PROJECT	SHEET No.	TOTAL SHEETS
05	SLO	1	9.5/10.0	4	40

REGISTERED CIVIL ENGINEER 5-03-10 DATE

5-10-10
PLANS APPROVAL DATE

REGISTERED PROFESSIONAL ENGINEER JAMES ESPINOSA No. 54100 Exp. 12/31/11 CIVIL STATE OF CALIFORNIA

THE STATE OF CALIFORNIA OR ITS OFFICERS OR AGENTS SHALL NOT BE RESPONSIBLE FOR THE ACCURACY OR COMPLETENESS OF SCANNED COPIES OF THIS PLAN SHEET.

NOTE: FOR COMPLETE RIGHT OF WAY AND ACCESS DATA,
CONTACT RIGHT OF WAY ENGINEERING AT DISTRICT OFFICE.

CURVE DATA

No.	R	Δ	T	L
6	229.66′	55°3′27″	119.70′	220.69′
9	241.01′	59°57′41″	139.04′	252.22′
10	574.14′	18°5′53″	91.44′	181.36′
11	1312.34′	8°20′13″	95.65′	190.95′

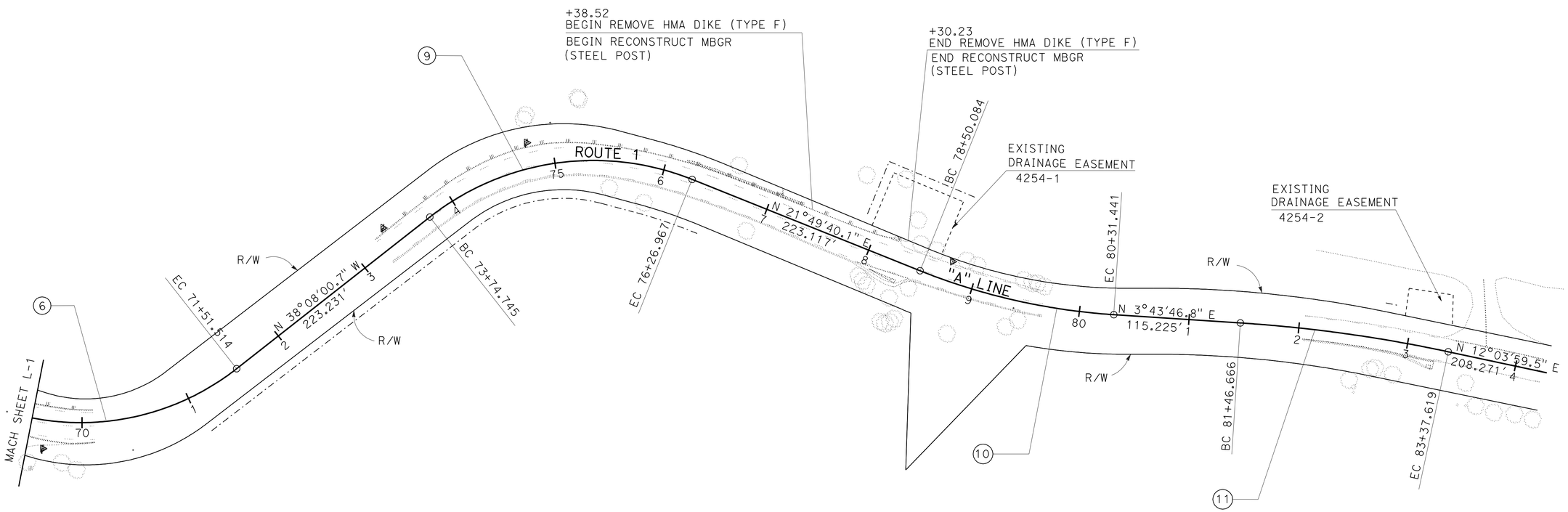

LAYOUT

SCALE: 1″ = 50′ **L-2**

STATE OF CALIFORNIA - DEPARTMENT OF TRANSPORTATION
Caltrans
06 - DESIGN

FUNCTIONAL SUPERVISOR: DAVID FAPP
CALCULATED-DESIGNED BY: ABRANA NARANJO
CHECKED BY: JAMES ESPINOSA
REVISED BY
DATE REVISED

LAST REVISION 04-26-10
DATE PLOTTED => 26-MAY-2010
TIME PLOTTED => 13:26

Dist	COUNTY	ROUTE	POST MILES TOTAL PROJECT	SHEET No.	TOTAL SHEETS
05	SLO	1	9.5/10.0	5	40

LICENSED LANDSCAPE ARCHITECT

5-10-10
PLANS APPROVAL DATE

LICENSED LANDSCAPE ARCHITECT
Laurie D. Dunn No. 3636
Signature
4/30/12
Renewal Date
11/10/09
Date
STATE OF CALIFORNIA

THE STATE OF CALIFORNIA OR ITS OFFICERS OR AGENTS SHALL NOT BE RESPONSIBLE FOR THE ACCURACY OR COMPLETENESS OF ELECTRONIC COPIES OF THIS PLAN SHEET.

NOTE: FOR ACCURATE RIGHT OF WAY AND ACCESS DATA, CONTACT RIGHT OF WAY ENGINEERING AT DISTRICT OFFICE.

LEGEND:

- EROSION CONTROL (TYPE 1)
- FIBER ROLLS (TYPE 2)
- TEMPORARY FENCE (TYPE ESA)
- PRUNE EXISTING PLANTS

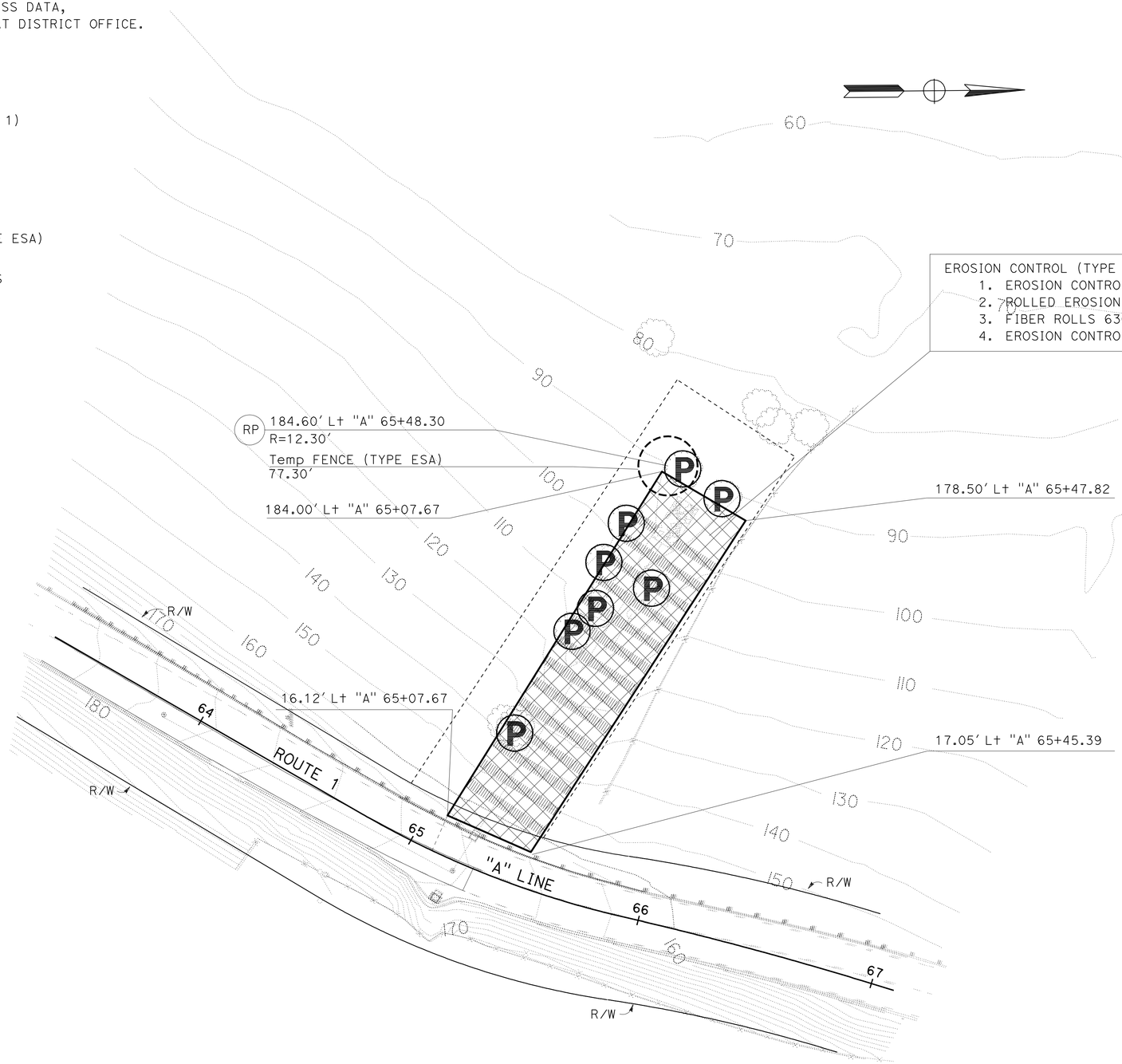

EROSION CONTROL (TYPE 1)
1. EROSION CONTROL (COMPOST BLANKET) 106 CY
2. ROLLED EROSION CONTROL PRODUCT (NETTING)(TYPE A) 17,186 SQFT
3. FIBER ROLLS 630 LF
4. EROSION CONTROL (HYDROSEED) 17,186 SQFT

THIS PLAN ACCURATE FOR EROSION CONTROL WORK ONLY.

EROSION CONTROL

NO SCALE

EC-1

STATE OF CALIFORNIA - DEPARTMENT OF TRANSPORTATION
Caltrans LANDSCAPE ARCHITECTURE

SENIOR LANDSCAPE ARCHITECT: DENNIS REEVES
CALCULATED-DESIGNED BY: KATHLEEN JENKINS
CHECKED BY: LAURIE D. CUMMINGS
REVISED BY / DATE REVISED

LAST REVISION 04-27-10
DATE PLOTTED => 12-MAY-2010
TIME PLOTTED => 10:05

F:\05-OL2201r\50L220ge001.dgn

Dist	COUNTY	ROUTE	POST MILES TOTAL PROJECT	SHEET No.	TOTAL SHEETS
05	SLO	1	9.5/10.0	6	40

LICENSED LANDSCAPE ARCHITECT

5-10-10
PLANS APPROVAL DATE

LICENSED LANDSCAPE ARCHITECT
Laurie D. Dunn No. 3636
Signature
4/30/12
Renewal Date
11/10/09
Date
STATE OF CALIFORNIA

THE STATE OF CALIFORNIA OR ITS OFFICERS OR AGENTS SHALL NOT BE RESPONSIBLE FOR THE ACCURACY OR COMPLETENESS OF ELECTRONIC COPIES OF THIS PLAN SHEET.

NOTE: FOR ACCURATE RIGHT OF WAY AND ACCESS DATA,
CONTACT RIGHT OF WAY ENGINEERING AT DISTRICT OFFICE.

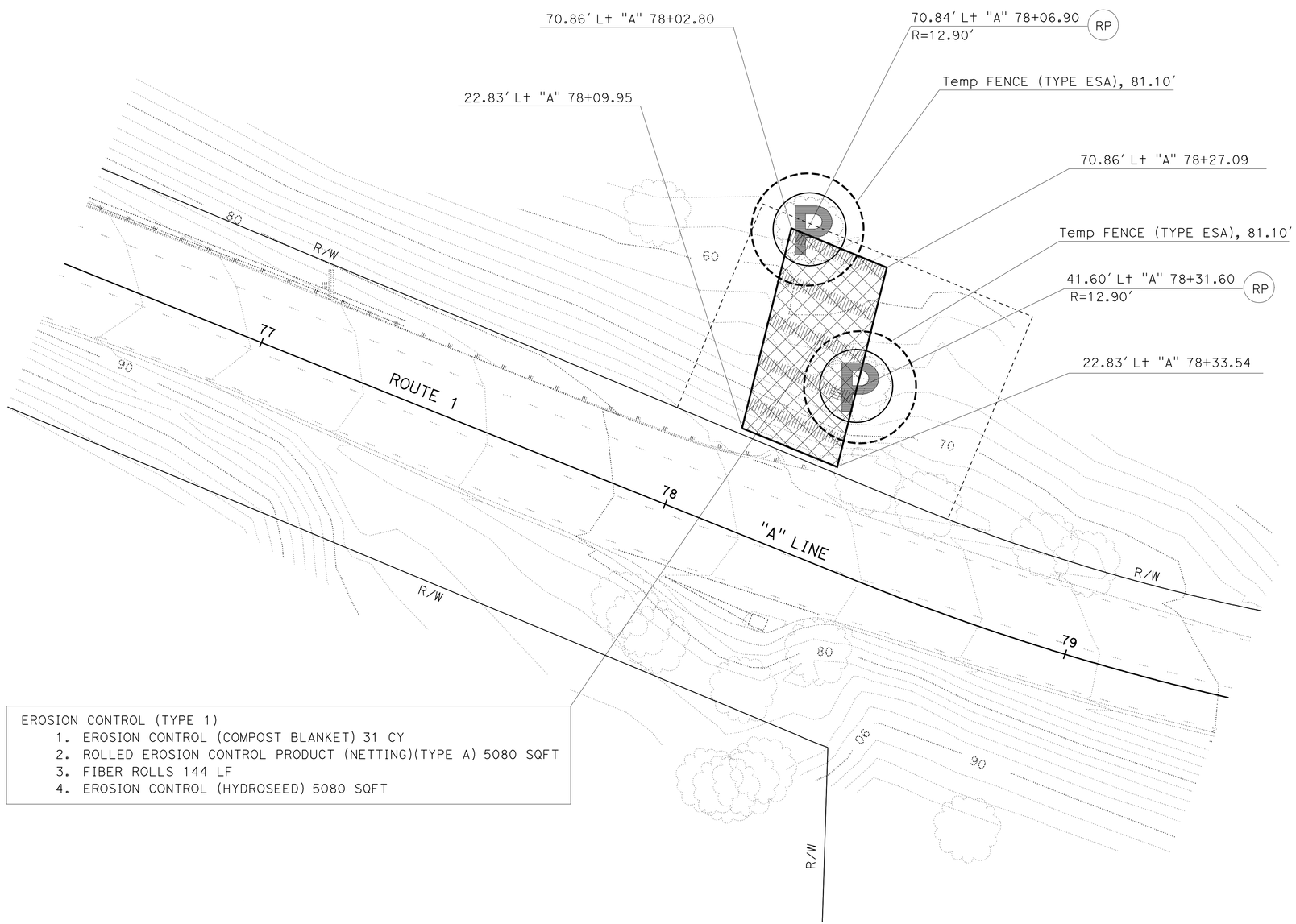

EROSION CONTROL (TYPE 1)
1. EROSION CONTROL (COMPOST BLANKET) 31 CY
2. ROLLED EROSION CONTROL PRODUCT (NETTING)(TYPE A) 5080 SQFT
3. FIBER ROLLS 144 LF
4. EROSION CONTROL (HYDROSEED) 5080 SQFT

THIS PLAN ACCURATE FOR EROSION CONTROL WORK ONLY.

EROSION CONTROL

NO SCALE

EC-2

STATE OF CALIFORNIA - DEPARTMENT OF TRANSPORTATION
Caltrans LANDSCAPE ARCHITECTURE

SENIOR LANDSCAPE ARCHITECT: DENNIS REEVES
CALCULATED-DESIGNED BY: KATHLEEN JENKINS
CHECKED BY: LAURIE D. CUMMINGS
REVISED BY
DATE REVISED

LAST REVISION 04-27-10
DATE PLOTTED => 12-MAY-2010
TIME PLOTTED => 10:05

F:\05-OL2201r\50L220ge002.dgn

Dist	COUNTY	ROUTE	POST MILES TOTAL PROJECT	SHEET No.	TOTAL SHEETS
05	SLO	1	9.5/10.0	7	40

REGISTERED CIVIL ENGINEER 5-03-10 DATE

5-10-10
PLANS APPROVAL DATE

REGISTERED PROFESSIONAL ENGINEER
JAMES ESPINOSA
No. 54100
Exp. 12/31/11
CIVIL
STATE OF CALIFORNIA

THE STATE OF CALIFORNIA OR ITS OFFICERS OR AGENTS SHALL NOT BE RESPONSIBLE FOR THE ACCURACY OR COMPLETENESS OF SCANNED COPIES OF THIS PLAN SHEET.

NOTE: FOR ACCURATE RIGHT OF WAY AND ACCESS DATA,
CONTACT RIGHT OF WAY ENGINEERING AT DISTRICT OFFICE.

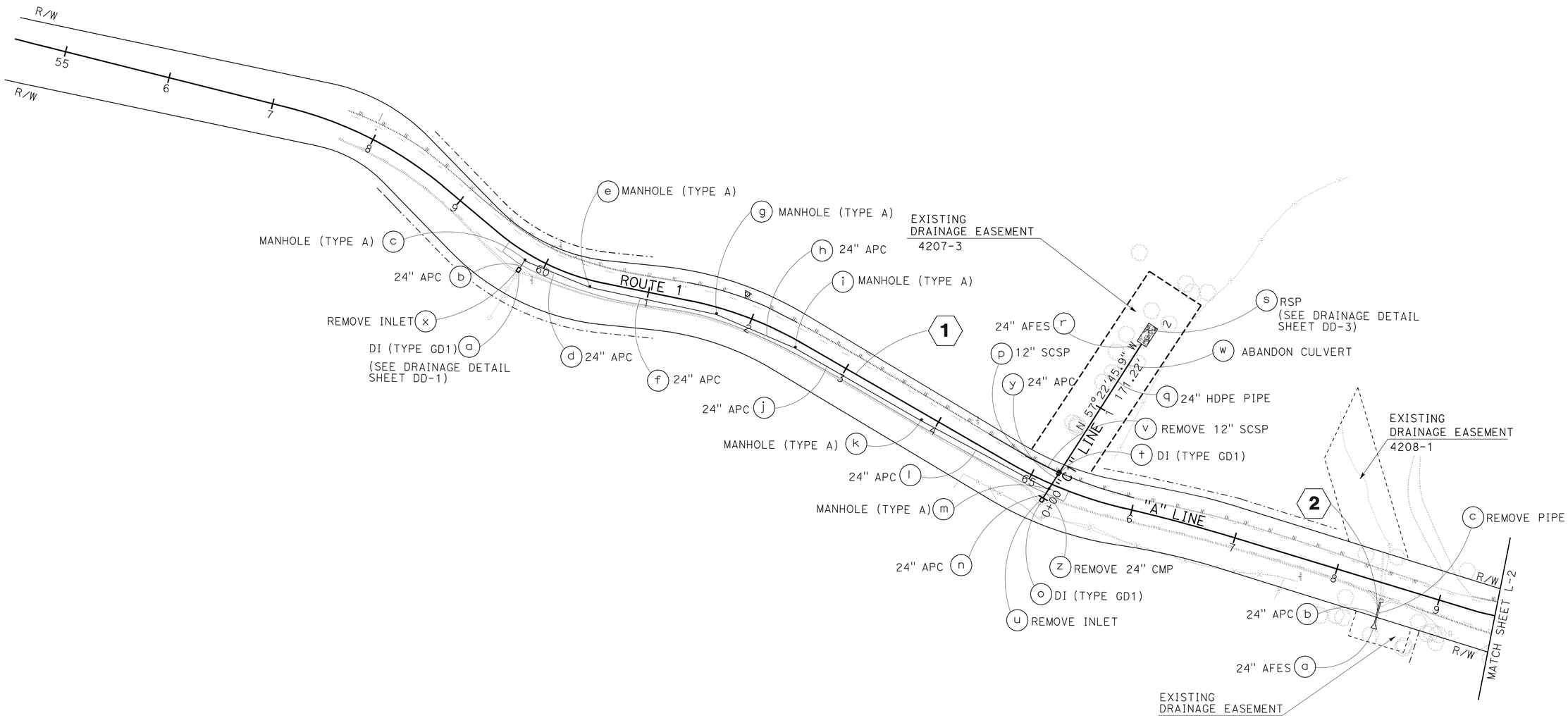

THIS PLAN ACCURATE FOR DRAINAGE WORK ONLY.

DRAINAGE PLAN

SCALE: 1" = 50'

D-1

REVISED BY	DATE REVISED
ABRANA NARANJO	JAMES ESPINOSA

CALCULATED-DESIGNED BY
CHECKED BY

FUNCTIONAL SUPERVISOR
DAVID FAPP

STATE OF CALIFORNIA - DEPARTMENT OF TRANSPORTATION
Caltrans
06 - DESIGN

LAST REVISION 04-15-10 | DATE PLOTTED => 26-MAY-2010 | TIME PLOTTED => 13:29

Dist	COUNTY	ROUTE	POST MILES TOTAL PROJECT	SHEET No.	TOTAL SHEETS
05	SLO	1	9.5/10.0	8	40

REGISTERED CIVIL ENGINEER 5-03-10 DATE

5-10-10
PLANS APPROVAL DATE

REGISTERED PROFESSIONAL ENGINEER
JAMES ESPINOSA
No. 54100
Exp. 12/31/11
CIVIL
STATE OF CALIFORNIA

THE STATE OF CALIFORNIA OR ITS OFFICERS OR AGENTS SHALL NOT BE RESPONSIBLE FOR THE ACCURACY OR COMPLETENESS OF SCANNED COPIES OF THIS PLAN SHEET.

NOTE: FOR ACCURATE RIGHT OF WAY AND ACCESS DATA,
CONTACT RIGHT OF WAY ENGINEERING AT DISTRICT OFFICE.

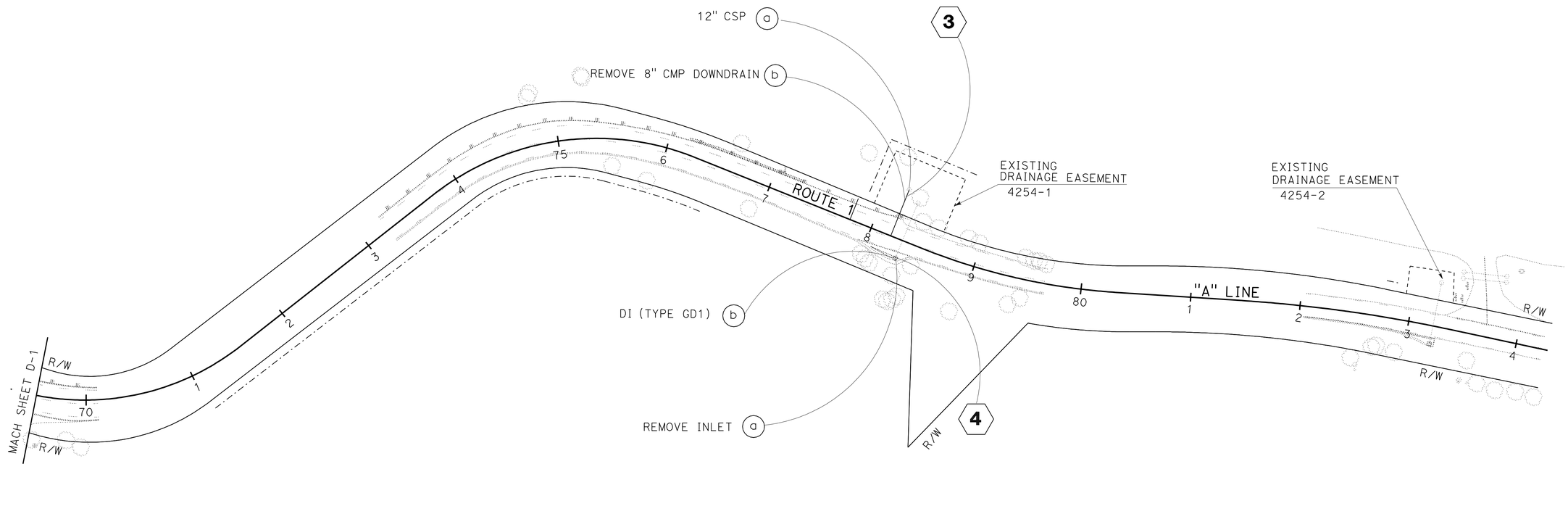

THIS PLAN ACCURATE FOR DRAINAGE WORK ONLY

DRAINAGE PLAN
D-2

SCALE: 1" = 50'

STATE OF CALIFORNIA - DEPARTMENT OF TRANSPORTATION
Caltrans®
06 - DESIGN

FUNCTIONAL SUPERVISOR: DAVID FAPP
CALCULATED-DESIGNED BY: ABRANA NARANJO
CHECKED BY: JAMES ESPINOSA
REVISED BY
DATE REVISED

LAST REVISION 11-09-09
DATE PLOTTED => 26-MAY-2010
TIME PLOTTED => 13:29

Dist	COUNTY	ROUTE	POST MILES TOTAL PROJECT	SHEET No.	TOTAL SHEETS
05	SLO	1	9.5/10.0	9	40

REGISTERED CIVIL ENGINEER 12-28-09 DATE

5-10-10
PLANS APPROVAL DATE

REGISTERED PROFESSIONAL ENGINEER JAMES ESPINOSA No. 54100 Exp. 12/31/11 CIVIL STATE OF CALIFORNIA

THE STATE OF CALIFORNIA OR ITS OFFICERS OR AGENTS SHALL NOT BE RESPONSIBLE FOR THE ACCURACY OR COMPLETENESS OF SCANNED COPIES OF THIS PLAN SHEET.

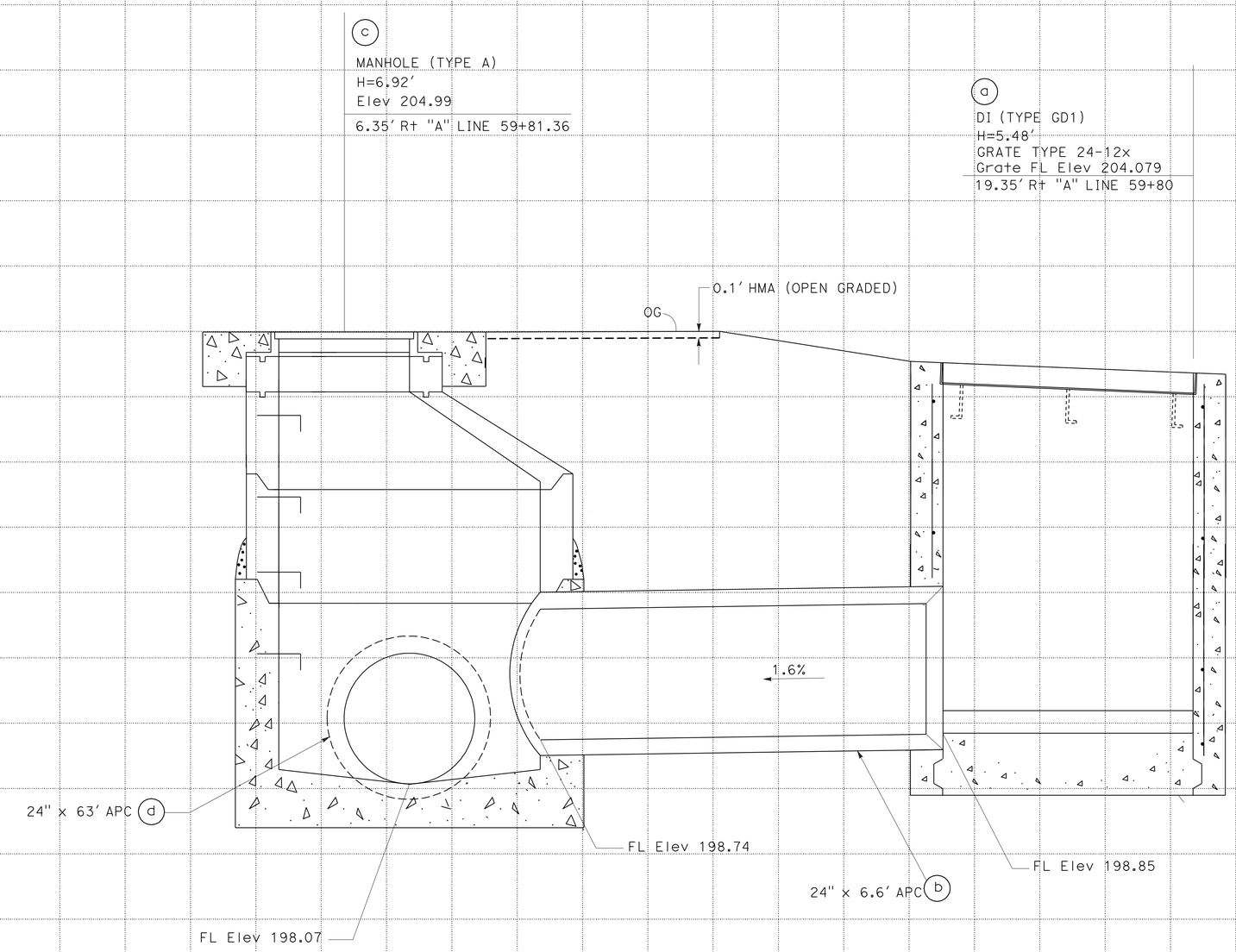

DRAINAGE SYSTEM No. (1)

DRAINAGE PROFILES

SCALE: Horiz 1" = 1'
Vert 1" = 1'

DP-1

STATION		TOTAL
CY	Exc	
	Emb	

STATE OF CALIFORNIA - DEPARTMENT OF TRANSPORTATION
Caltrans
06 - DESIGN

FUNCTIONAL SUPERVISOR: DAVID FAPP
CALCULATED-DESIGNED BY: JAMES ESPINOSA
CHECKED BY: ABRANA NARANJO
REVISED BY
DATE REVISED

LAST REVISION 12-28-09
DATE PLOTTED => 12-MAY-2010
TIME PLOTTED => 10:05

Dist	COUNTY	ROUTE	POST MILES TOTAL PROJECT	SHEET No.	TOTAL SHEETS
05	SLO	1	9.5/10.0	10	40

REGISTERED CIVIL ENGINEER 12-28-09 DATE

5-10-10
PLANS APPROVAL DATE

REGISTERED PROFESSIONAL ENGINEER
JAMES ESPINOSA
No. 54100
Exp. 12/31/11
CIVIL
STATE OF CALIFORNIA

THE STATE OF CALIFORNIA OR ITS OFFICERS OR AGENTS SHALL NOT BE RESPONSIBLE FOR THE ACCURACY OR COMPLETENESS OF SCANNED COPIES OF THIS PLAN SHEET.

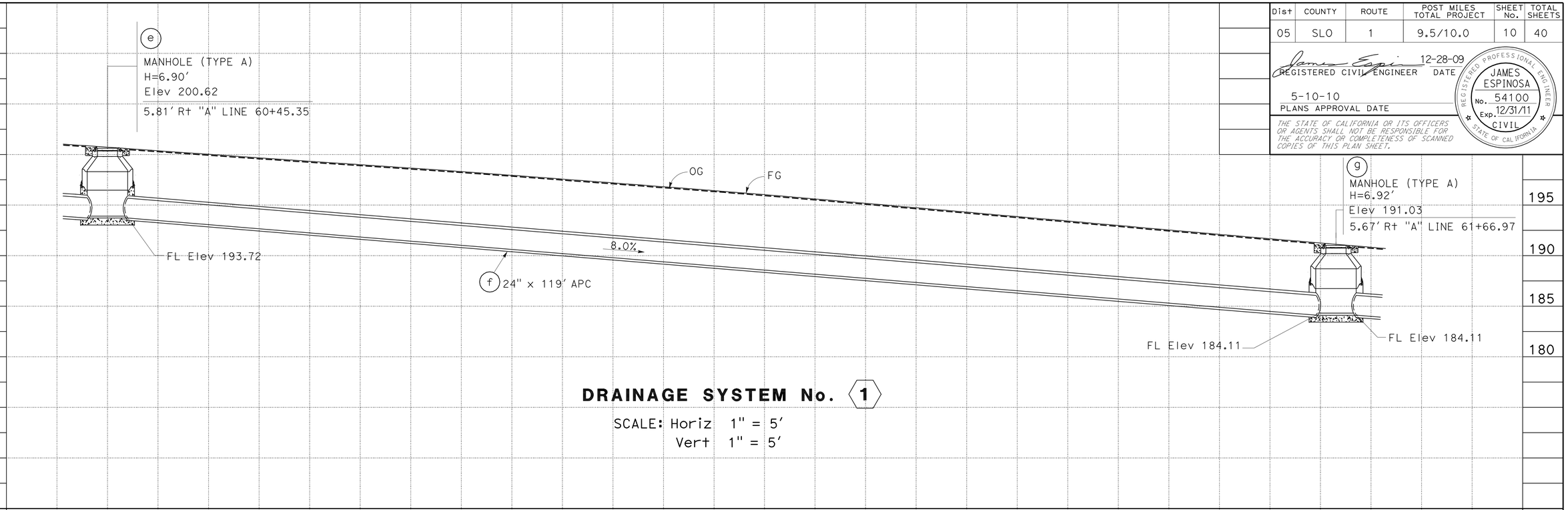

DRAINAGE SYSTEM No. 1

SCALE: Horiz 1" = 5'
Vert 1" = 5'

STATION		TOTAL
CY	Exc	
	Emb	

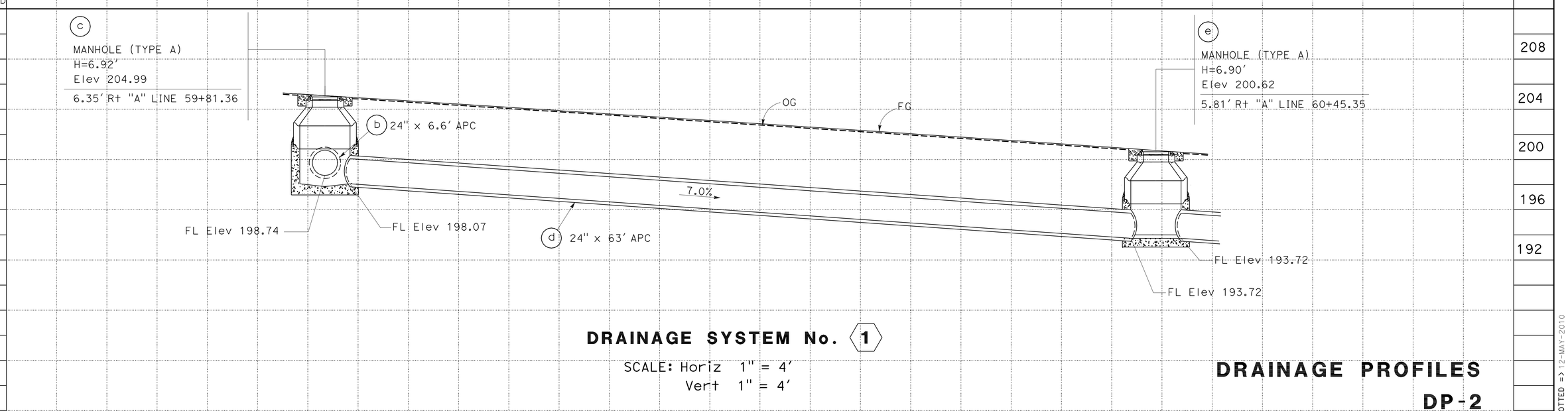

DRAINAGE SYSTEM No. 1

SCALE: Horiz 1" = 4'
Vert 1" = 4'

STATION		TOTAL
CY	Exc	
	Emb	

DRAINAGE PROFILES

DP-2

REVISED BY | DATE REVISED
ABRANA NARANJO | JAMES ESPINOSA
CALCULATED-DESIGNED BY | CHECKED BY
FUNCTIONAL SUPERVISOR | DAVID FAPP
STATE OF CALIFORNIA - DEPARTMENT OF TRANSPORTATION
Caltrans
06 - DESIGN

LAST REVISION | DATE PLOTTED => 12-MAY-2010
12-28-09 | TIME PLOTTED => 10:05

Dist	COUNTY	ROUTE	POST MILES TOTAL PROJECT	SHEET No.	TOTAL SHEETS
05	SLO	1	9.5/10.0	11	40

REGISTERED CIVIL ENGINEER 12-28-09 DATE

5-10-10
PLANS APPROVAL DATE

REGISTERED PROFESSIONAL ENGINEER JAMES ESPINOSA No. 54100 Exp. 12/31/11 CIVIL STATE OF CALIFORNIA

THE STATE OF CALIFORNIA OR ITS OFFICERS OR AGENTS SHALL NOT BE RESPONSIBLE FOR THE ACCURACY OR COMPLETENESS OF SCANNED COPIES OF THIS PLAN SHEET.

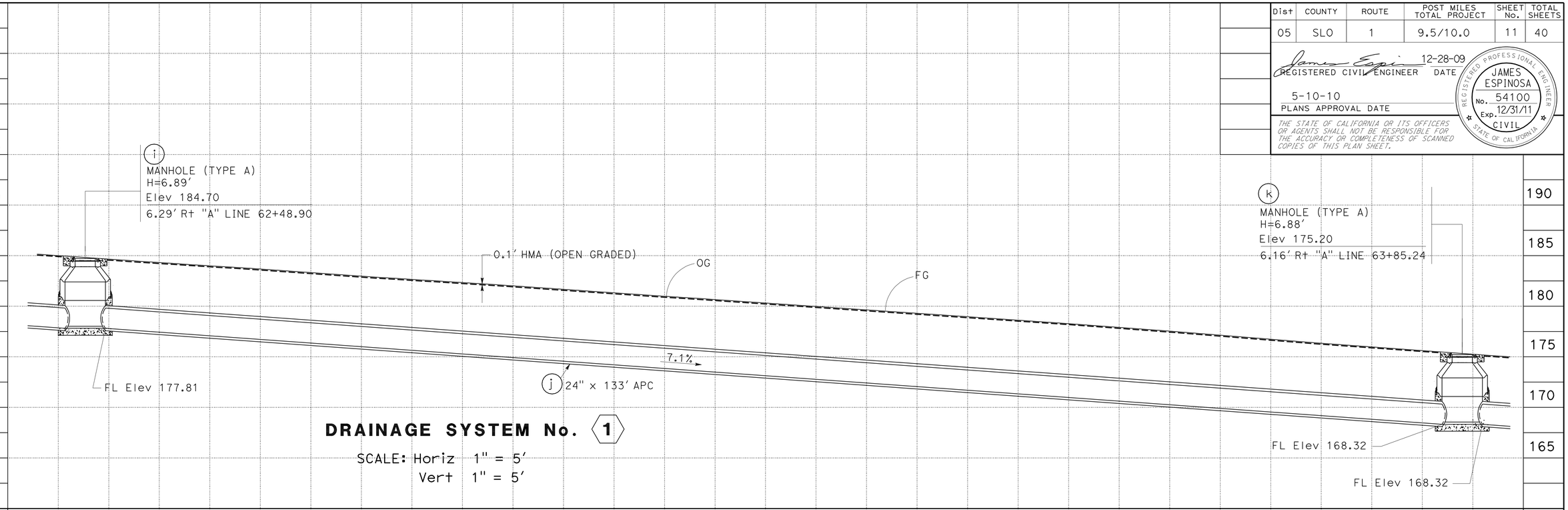

DRAINAGE SYSTEM No. 1

SCALE: Horiz 1" = 5'
Vert 1" = 5'

STATION		TOTAL
CY	Exc	
	Emb	

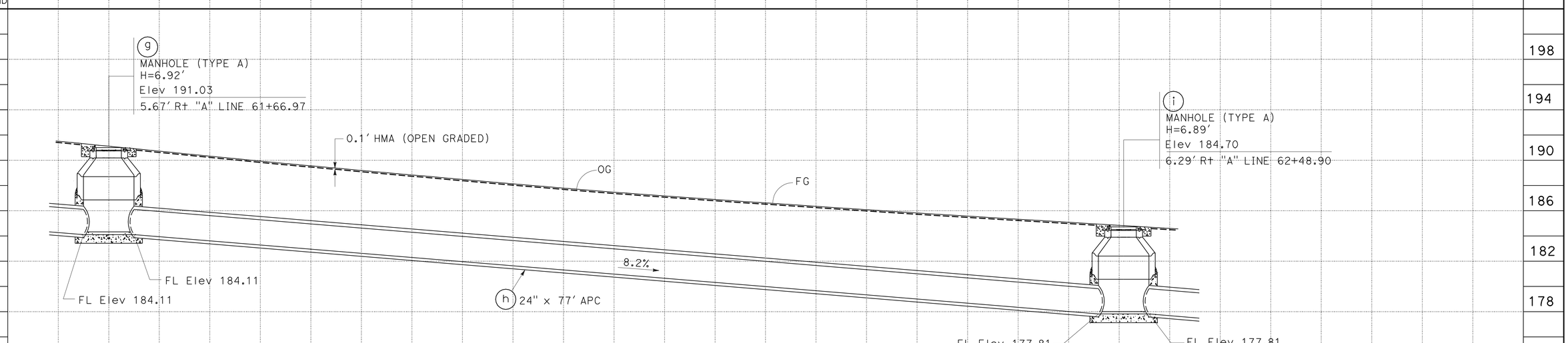

DRAINAGE SYSTEM No. 1

SCALE: Horiz 1" = 4'
Vert 1" = 4'

STATION		TOTAL
CY	Exc	
	Emb	

DRAINAGE PROFILES

DP-3

REVISED BY | DATE REVISED
ABRANA NARANJO | JAMES ESPINOSA
CALCULATED-DESIGNED BY | CHECKED BY
FUNCTIONAL SUPERVISOR: DAVID FAPP

STATE OF CALIFORNIA - DEPARTMENT OF TRANSPORTATION
Caltrans
06 - DESIGN

LAST REVISION | DATE PLOTTED => 12-MAY-2010
12-28-09 | TIME PLOTTED => 10:05

Dist	COUNTY	ROUTE	POST MILES TOTAL PROJECT	SHEET No.	TOTAL SHEETS
05	SLO	1	9.5/10.0	12	40

REGISTERED CIVIL ENGINEER 5-03-10 DATE

5-10-10
PLANS APPROVAL DATE

REGISTERED PROFESSIONAL ENGINEER JAMES ESPINOSA No. 54100 Exp. 12/31/11 CIVIL STATE OF CALIFORNIA

THE STATE OF CALIFORNIA OR ITS OFFICERS OR AGENTS SHALL NOT BE RESPONSIBLE FOR THE ACCURACY OR COMPLETENESS OF SCANNED COPIES OF THIS PLAN SHEET.

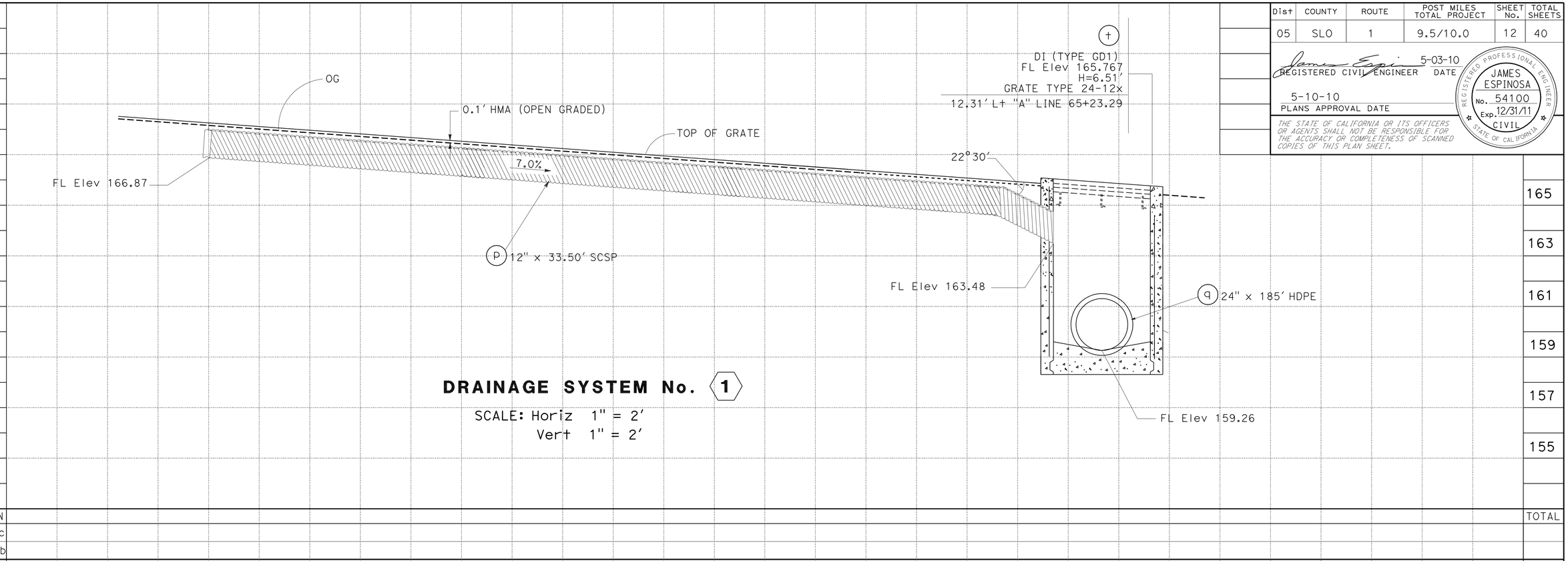

DRAINAGE SYSTEM No. 1

SCALE: Horiz 1" = 2'
Vert 1" = 2'

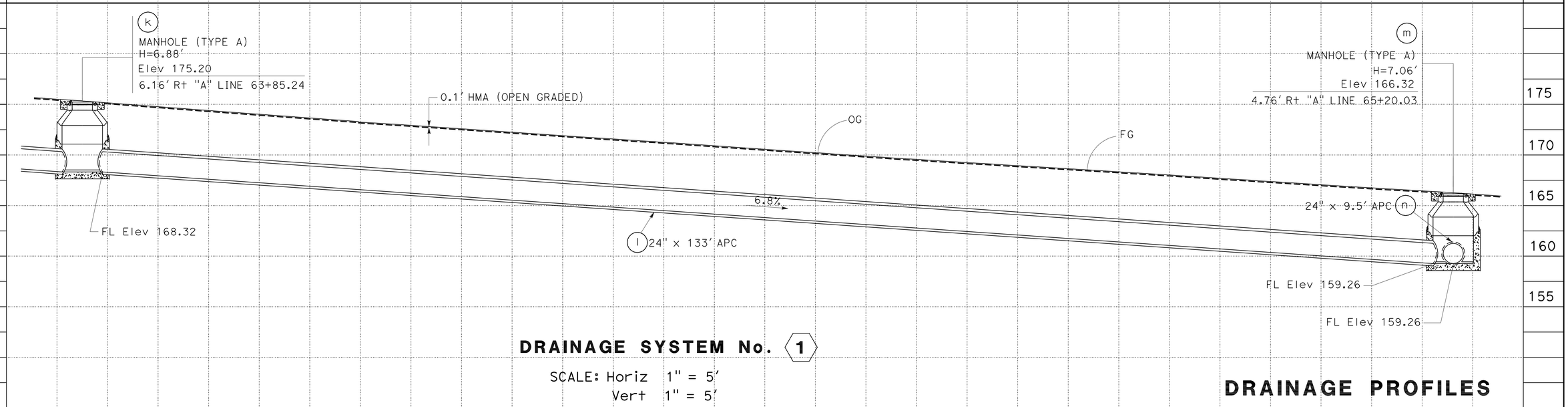

DRAINAGE SYSTEM No. 1

SCALE: Horiz 1" = 5'
Vert 1" = 5'

DRAINAGE PROFILES
DP-4

REVISED BY | DATE REVISED
ABRANA NARANJO | JAMES ESPINOSA
CALCULATED-DESIGNED BY | CHECKED BY
FUNCTIONAL SUPERVISOR | DAVID FAPP
STATE OF CALIFORNIA - DEPARTMENT OF TRANSPORTATION
Caltrans
06 - DESIGN

LAST REVISION 04-15-10 | DATE PLOTTED => 12-MAY-2010 | TIME PLOTTED => 10:06

Dist	COUNTY	ROUTE	POST MILES TOTAL PROJECT	SHEET No.	TOTAL SHEETS
05	SLO	1	9.5/10.0	13	40

REGISTERED CIVIL ENGINEER 5-03-10 DATE

5-10-10
PLANS APPROVAL DATE

REGISTERED PROFESSIONAL ENGINEER JAMES ESPINOSA No. 54100 Exp. 12/31/11 CIVIL STATE OF CALIFORNIA

THE STATE OF CALIFORNIA OR ITS OFFICERS OR AGENTS SHALL NOT BE RESPONSIBLE FOR THE ACCURACY OR COMPLETENESS OF SCANNED COPIES OF THIS PLAN SHEET.

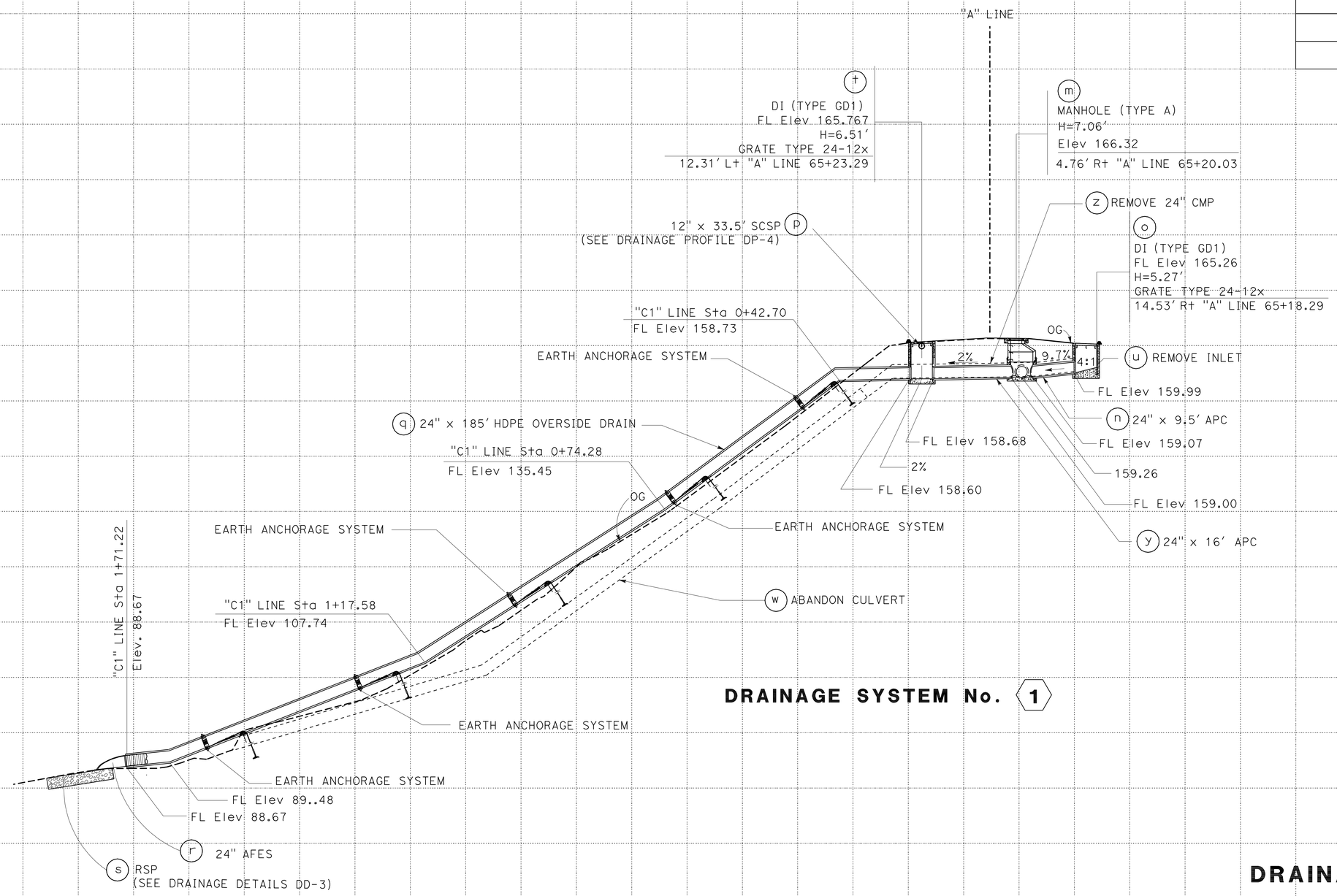

DRAINAGE SYSTEM No. 1

DRAINAGE PROFILES

DP-5

SCALE: Horiz 1" = 10'
Vert 1" = 10'

STATION		TOTAL
CY	Exc	
	Emb	

STATE OF CALIFORNIA - DEPARTMENT OF TRANSPORTATION
06 - DESIGN
Caltrans

FUNCTIONAL SUPERVISOR: DAVID FAPP
CALCULATED-DESIGNED BY: JAMES ESPINOSA
CHECKED BY: ABRANA NARANJO
REVISED BY
DATE REVISED

LAST REVISION 04-15-10 | DATE PLOTTED => 12-MAY-2010 | TIME PLOTTED => 10:06

Dist	COUNTY	ROUTE	POST MILES TOTAL PROJECT	SHEET No.	TOTAL SHEETS
05	SLO	1	9.5/10.0	14	40

REGISTERED CIVIL ENGINEER 12-28-09 DATE

5-10-10
PLANS APPROVAL DATE

REGISTERED PROFESSIONAL ENGINEER JAMES ESPINOSA No. 54100 Exp. 12/31/11 CIVIL STATE OF CALIFORNIA

THE STATE OF CALIFORNIA OR ITS OFFICERS OR AGENTS SHALL NOT BE RESPONSIBLE FOR THE ACCURACY OR COMPLETENESS OF SCANNED COPIES OF THIS PLAN SHEET.

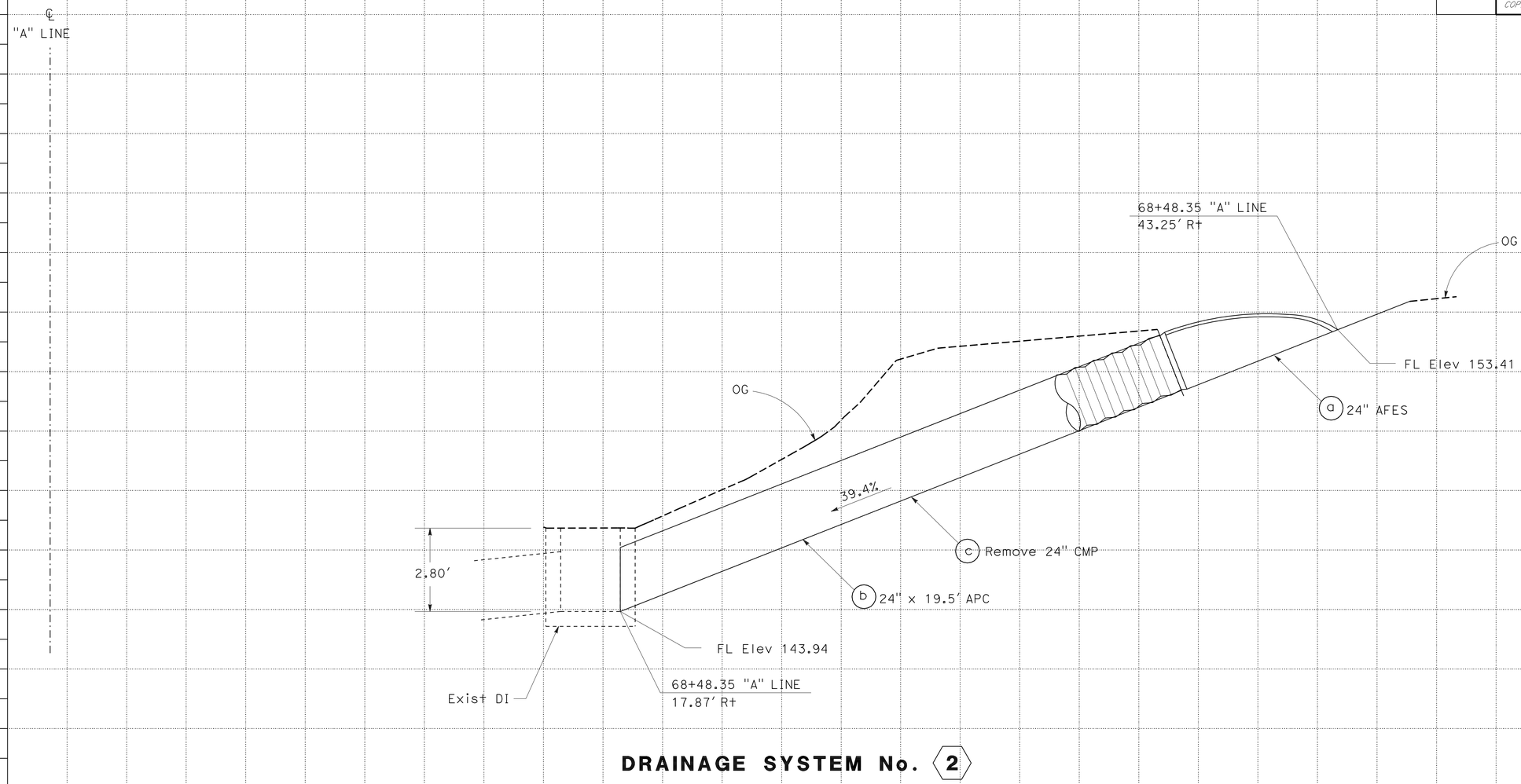

DRAINAGE SYSTEM No. 2

DRAINAGE PROFILES

DP-6

SCALE: Horiz 1" = 2'
Vert 1" = 2'

STATION		TOTAL
CY	Exc	
	Emb	

REVISED BY | DATE REVISED
ABRANA NARANJO | JAMES ESPINOSA
CALCULATED-DESIGNED BY | CHECKED BY
FUNCTIONAL SUPERVISOR: DAVID FAPP
STATE OF CALIFORNIA - DEPARTMENT OF TRANSPORTATION
Caltrans
06 - DESIGN

LAST REVISION | DATE PLOTTED => 12-MAY-2010
12-28-09 | TIME PLOTTED => 10:06

Dist	COUNTY	ROUTE	POST MILES TOTAL PROJECT	SHEET No.	TOTAL SHEETS
05	SLO	1	9.5/10.0	15	40

REGISTERED CIVIL ENGINEER 12-28-09 DATE

5-10-10
PLANS APPROVAL DATE

REGISTERED PROFESSIONAL ENGINEER JAMES ESPINOSA No. 54100 Exp. 12/31/11 CIVIL STATE OF CALIFORNIA

THE STATE OF CALIFORNIA OR ITS OFFICERS OR AGENTS SHALL NOT BE RESPONSIBLE FOR THE ACCURACY OR COMPLETENESS OF SCANNED COPIES OF THIS PLAN SHEET.

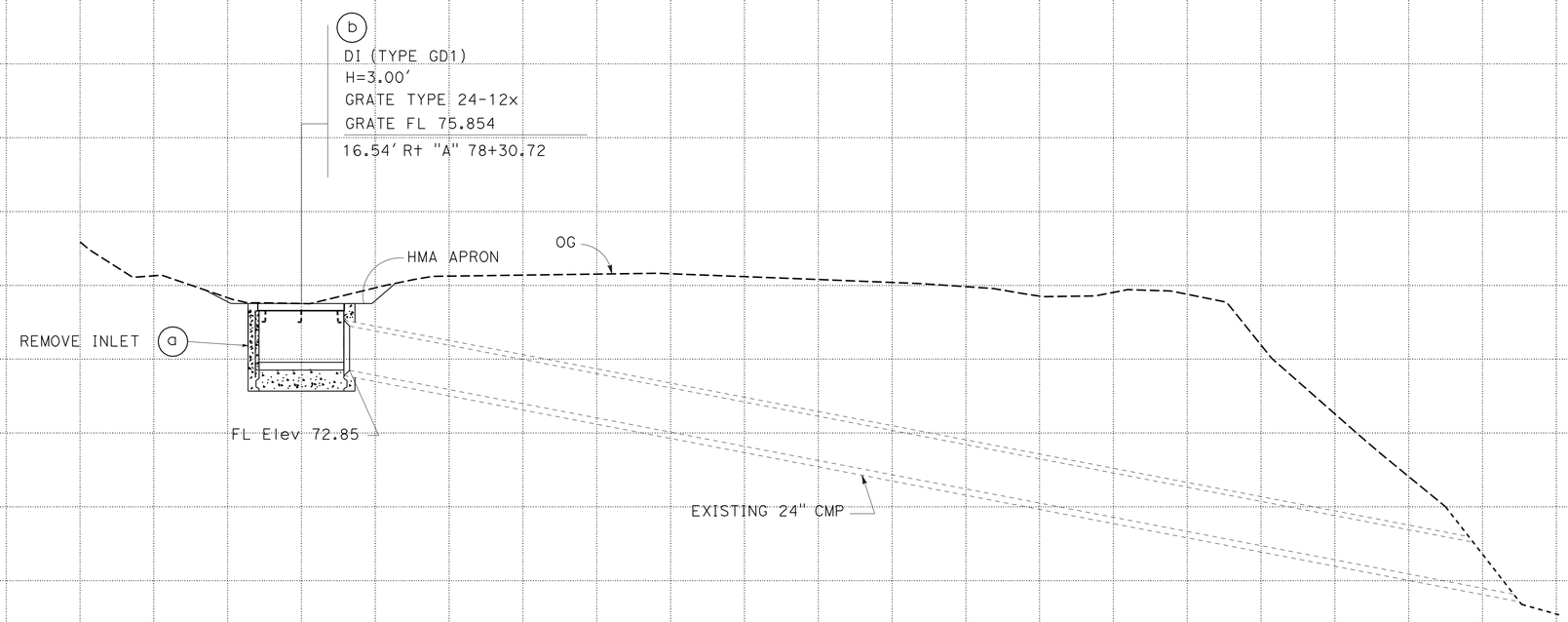

DRAINAGE SYSTEM No. 4

DRAINAGE PROFILES

DP-7

SCALE: Horiz 1" = 3.33'
Vert 1" = 3.33'

STATION		TOTAL
CY	Exc	
	Emb	

STATE OF CALIFORNIA - DEPARTMENT OF TRANSPORTATION
Caltrans
06 - DESIGN

FUNCTIONAL SUPERVISOR: DAVID FAPP
CALCULATED-DESIGNED BY: JAMES ESPINOSA
CHECKED BY: ABRANA NARANJO
REVISED BY / DATE REVISED

LAST REVISION 12-28-09
DATE PLOTTED => 12-MAY-2010
TIME PLOTTED => 10:06

Dist	COUNTY	ROUTE	POST MILES TOTAL PROJECT	SHEET No.	TOTAL SHEETS
05	SLO	1	9.5/10.0	16	40

REGISTERED CIVIL ENGINEER 5-03-10 DATE

5-10-10
PLANS APPROVAL DATE

REGISTERED PROFESSIONAL ENGINEER JAMES ESPINOSA No. 54100 Exp. 12/31/11 CIVIL STATE OF CALIFORNIA

THE STATE OF CALIFORNIA OR ITS OFFICERS OR AGENTS SHALL NOT BE RESPONSIBLE FOR THE ACCURACY OR COMPLETENESS OF SCANNED COPIES OF THIS PLAN SHEET.

NOTES

1. 'H' IS THE DIFFERENCE IN ELEVATION BETWEEN THE OUTLET PIPE FLOW LINE AND THE FLOW LINE OF THE GRATES.
2. STEPS - NONE REQUIRED WHEN 'H' IS 3'-6" OR LESS. INSTALL ONE STEP 16"± ABOVE FLOOR WHEN 'H' IS MORE THAN 3'-6" AND LESS THAN 5'-0". WHERE 'H' IS MORE THAN 5'-0"STEPS SHALL BE EVENLY SPACED @ 12"± INTERVALS FROM 16"± ABOVE FLOOR TO WITHIN 12"± OF THE TOP OF THE BOX. PLACE STEPS IN WALL WITHOUT PIPE OPENINGS. SEE STANDARD PLAN D74C FOR STEP DETAIL.
3. PIPE(S) CAN BE PLACED IN ANY WALL.
4. REINFORCING STEEL NOT REQUIRED IN WALLS WHEN H= 6'-0" OR LESS.
5. REINFORCING STEEL IN WALLS SHALL BE #4 BARS @ 18"± CENTERS PLACED 1½" CLEAR TO INSIDE OF BOX.

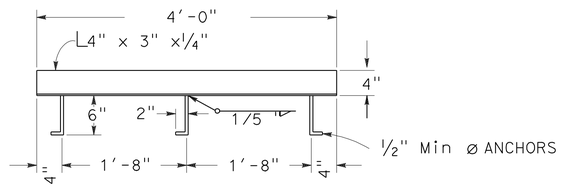

ANCHOR PLACEMENT DETAIL

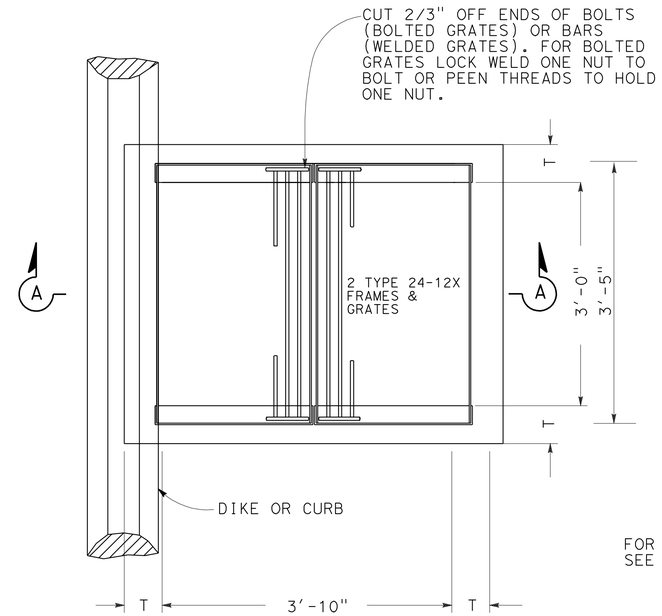

PLAN

FOR GRATE, FRAME AND ANCHOR PLACEMENT DETAILS SEE STANDARD PLANS D77-A AND D77-B

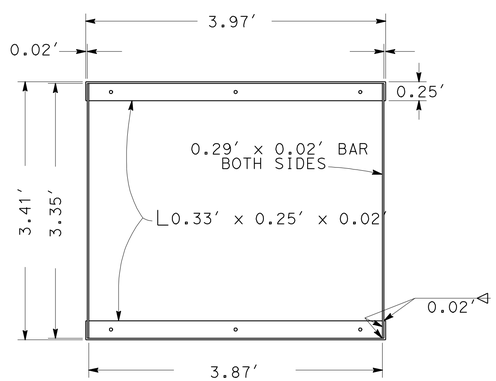

GRATE FRAME DETAIL

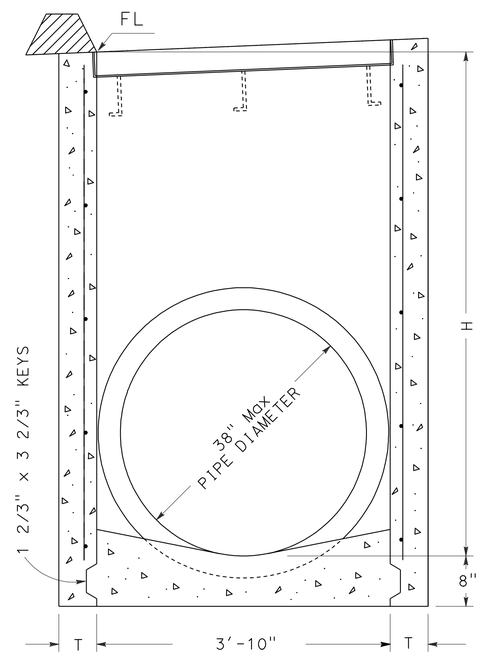

SECTION A-A
(FOR PIPE DIAMETERS 38" OR LESS)

GD-1

MISCELLANEOUS IRON & STEEL

INLET TYPE	GRATE TYPE	MASS(LB)
GD-1 & GD-2	24 - 12	634
	24 - 10C	391
	24 - 10S	456
	24 - 12X	473
	24 - 13	374
GD-3	24 - 12	634

H	T
8'-0" OR LESS	6"
8'-1" to 20'-0"	8"

DRAINAGE DETAILS

NO SCALE

DD-1

STATE OF CALIFORNIA - DEPARTMENT OF TRANSPORTATION
Caltrans®
06 - DESIGN
FUNCTIONAL SUPERVISOR: DAVID FAPP
CALCULATED-DESIGNED BY: ABRANA NARANJO
CHECKED BY: JAMES ESPINOSA
REVISED BY
DATE REVISED

LAST REVISION 03-01-10
DATE PLOTTED => 12-MAY-2010
TIME PLOTTED => 10:06

Dist	COUNTY	ROUTE	POST MILES TOTAL PROJECT	SHEET No.	TOTAL SHEETS
05	SLO	1	9.5/10.0	17	40

REGISTERED CIVIL ENGINEER 12-28-09 DATE

5-10-10
PLANS APPROVAL DATE

REGISTERED PROFESSIONAL ENGINEER JAMES ESPINOSA No. 54100 Exp. 12/31/11 CIVIL STATE OF CALIFORNIA

THE STATE OF CALIFORNIA OR ITS OFFICERS OR AGENTS SHALL NOT BE RESPONSIBLE FOR THE ACCURACY OR COMPLETENESS OF SCANNED COPIES OF THIS PLAN SHEET.

NOTES:

1. AN ALTERNATE STEP MAY BE USED SUBJECT TO THE APPROVAL OF THE ENGINEER.
2. ALL STEPS SHALL BE FIRMLY AND RUGIDLY SET WITH EPOXY GROUT OR EPOXY.
3. STEPS SHALL BE GALVANIZED AFTER BENDING.
4. IN MANHOLES WITH LATERAL LINE CONNECTIONS, THE STEPS SHALL BE PLACED IN THE WALL WITH NO LATERALS OR THE WALL WITH THE LEAST DIAMETER LATERAL, SUCH THAT A CONTINOUS VERTICAL ALIGNMENT OF STEPS MAY BE ACHIEVED.
5. MANHOLES WITH STEPS SHALL BE USED WHENEVER H IS EQUAL TO OR GREATER THAN 4 ft.
6. MANHOLE COVER DESIGN, AS A MINIMUM, IS TO HAVE THE LETTER "D" MOLDED INTO THE COVER. REFERENCE TO STANDARD PLANS B7-11.
7. MANHOLES LOCATED IN UNPAVED AREAS SHALL HAVE BOLT DOWN COVERS.
8. ALL JOINTS BETWEEN PRECAST SECTIONS SHALL BE MORTARED.
9. INTERIOR OF THE MANHOLE SHALL HAVE A SMOOTH TROWELED SURFACE.
10. ECCENTRIC CONES IN PAVED AREAS SHALL BE ORIENTED TO PLACE FRAMES & COVERS AWAY FROM WHEEL TRACKS.

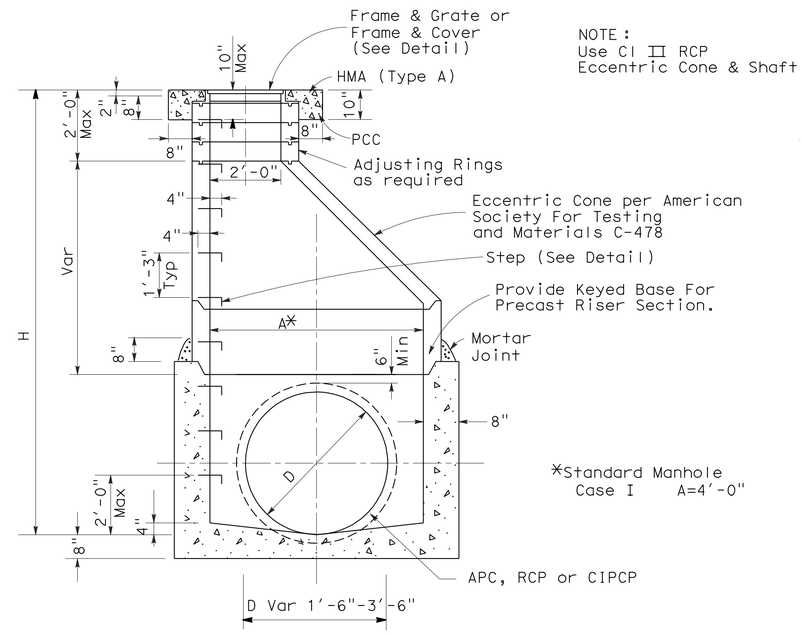

NOTE:
Use Cl III RCP
Eccentric Cone & Shaft

*Standard Manhole
Case I A=4'-0"

SECTION A-A

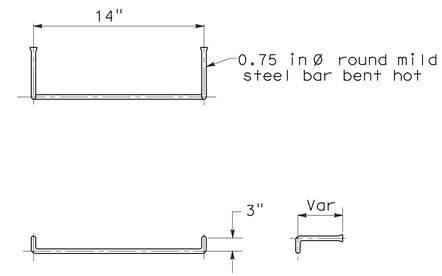

STEP DETAIL

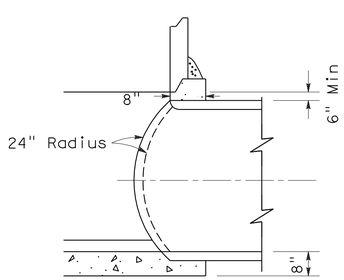

SECTION B-B

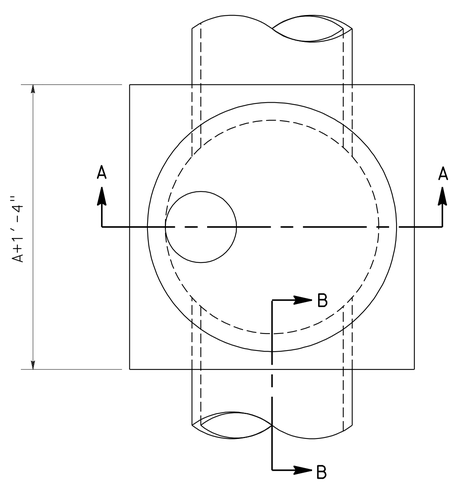

PLAN

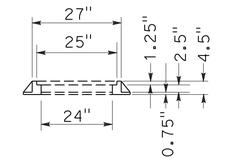

SECTION OF FRAME

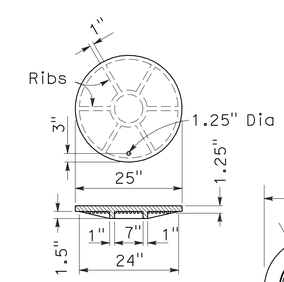

COVER

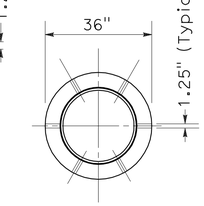

PLAN OF FRAME

DRAINAGE DETAILS

NO SCALE

DD-2

STATE OF CALIFORNIA - DEPARTMENT OF TRANSPORTATION
Caltrans®
06 - DESIGN

FUNCTIONAL SUPERVISOR: DAVID FAPP
CALCULATED-DESIGNED BY: ABRANA NARANJO
CHECKED BY: JAMES ESPINOSA
REVISED BY
DATE REVISED

LAST REVISION 12-28-09 | DATE PLOTTED => 12-MAY-2010 | TIME PLOTTED => 10:06

Dist	COUNTY	ROUTE	POST MILES TOTAL PROJECT	SHEET No.	TOTAL SHEETS
05	SLO	1	9.5/10.0	18	40

REGISTERED CIVIL ENGINEER 12-28-09 DATE

5-10-10
PLANS APPROVAL DATE

REGISTERED PROFESSIONAL ENGINEER JAMES ESPINOSA No. 54100 Exp. 12/31/11 CIVIL STATE OF CALIFORNIA

THE STATE OF CALIFORNIA OR ITS OFFICERS OR AGENTS SHALL NOT BE RESPONSIBLE FOR THE ACCURACY OR COMPLETENESS OF SCANNED COPIES OF THIS PLAN SHEET.

NOTES:

1) "d" REPRESENTS THE OUTSIDE DIAMETER OF THE PIPE CONNECTED TO THE FLARED-END SECTION.

2) THE ROCK MATERIAL AND PLACEMENT METHOD SHALL CONFORM TO THE GRADING "1/4 ton" FOR METHOD "B" PLACEMENTS AS SPECIFIED IN SECTIONS 72-2.02 AND 72-2.03 OF THE STANDARD SPECIFICATIONS.

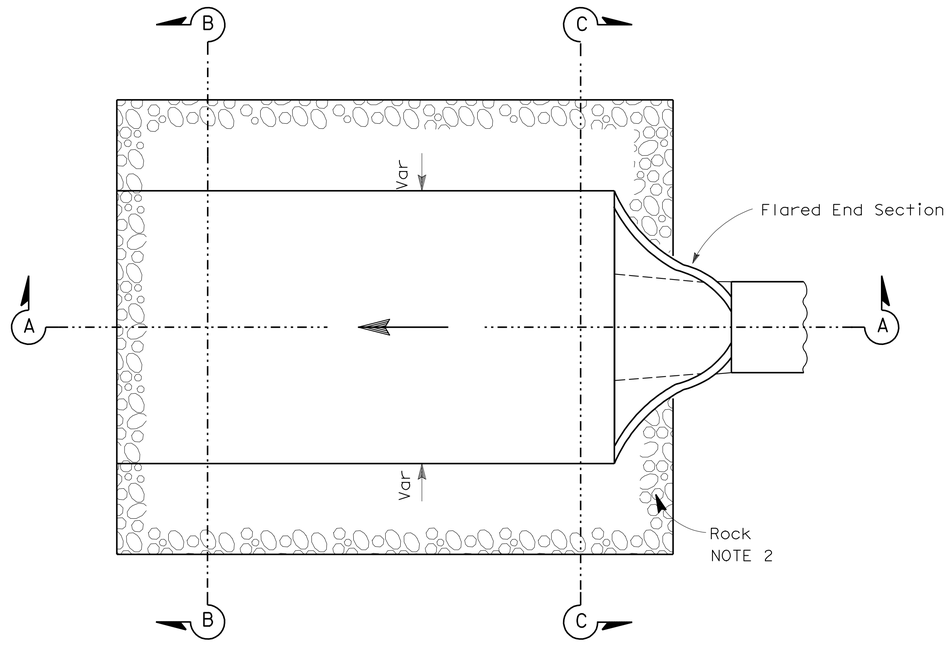

PLAN

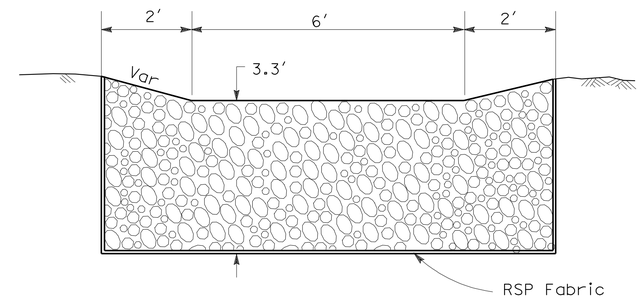

SECTION B-B

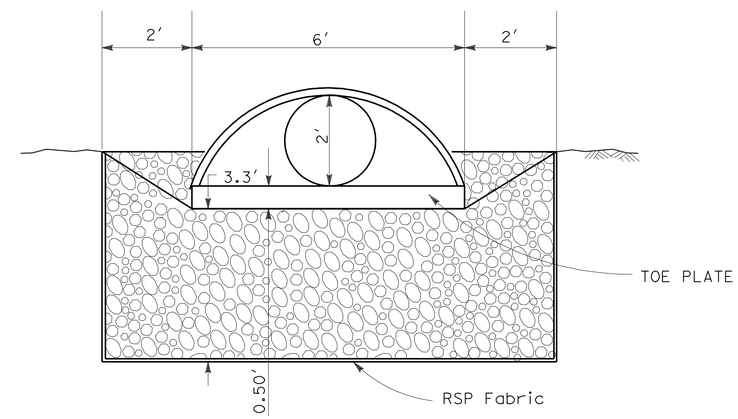

SECTION C-C

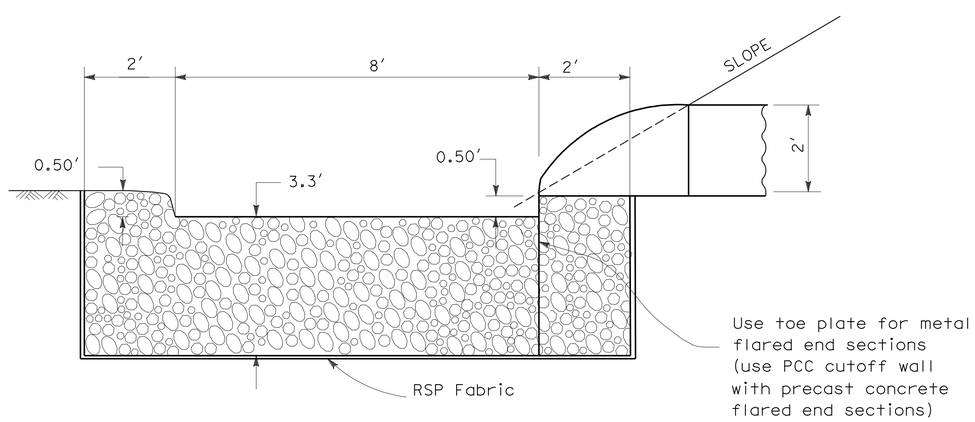

SECTION A-A

ROCK ENERGY DISSIPATOR

DRAINAGE DETAILS

NO SCALE

DD-3

REVISED BY	DATE REVISED
ABRANA NARANJO	JAMES ESPINOSA

CALCULATED-DESIGNED BY / CHECKED BY

FUNCTIONAL SUPERVISOR: DAVID FAPP

STATE OF CALIFORNIA - DEPARTMENT OF TRANSPORTATION

Caltrans®

06 - DESIGN

LAST REVISION 12-28-09 | DATE PLOTTED => 12-MAY-2010 | TIME PLOTTED => 10:06

Dist	COUNTY	ROUTE	POST MILES TOTAL PROJECT	SHEET No.	TOTAL SHEETS
05	SLO	1	9.5/10.0	19	40

REGISTERED CIVIL ENGINEER 12-28-09 DATE

5-10-10
PLANS APPROVAL DATE

REGISTERED PROFESSIONAL ENGINEER JAMES ESPINOSA No. 54100 Exp. 12/31/11 CIVIL STATE OF CALIFORNIA

THE STATE OF CALIFORNIA OR ITS OFFICERS OR AGENTS SHALL NOT BE RESPONSIBLE FOR THE ACCURACY OR COMPLETENESS OF SCANNED COPIES OF THIS PLAN SHEET.

NOTES:
1. FOR ADDITIONAL DETAILS OF THE SOIL ANCHOR REFER TO THE MANUFACTURER'S INSTALLATION INSTRUCTIONS.
2. FOR DETAILS OF RESTRAINER, REFER TO THE MANUFACTURER'S INSTALLATION INSTRUCTIONS.
3. PIPE AND FITTINGS USED FOR DOWN DRAIN SHALL BE FROM ONE MANUFACTURER FOR EACH INSTALLATION.
4. ATTACH 2 CABLES TO JOINT RESTRAINER.
5. EACH SOIL ANCHOR MUST BE PROOF TESTED AND SHALL BE INSTALLED IN CONFORMANCE WITH THE MANUFACTURER'S PRINTED INSTRUCTIONS.
6. FABRICATED FITTING (90° ELL-FIVE SEGMENT) SHALL BE FIELD CUT TO FIT. THE END SHALL BE PLAIN FOR FIELD BUTT FUSION TO PIPE.

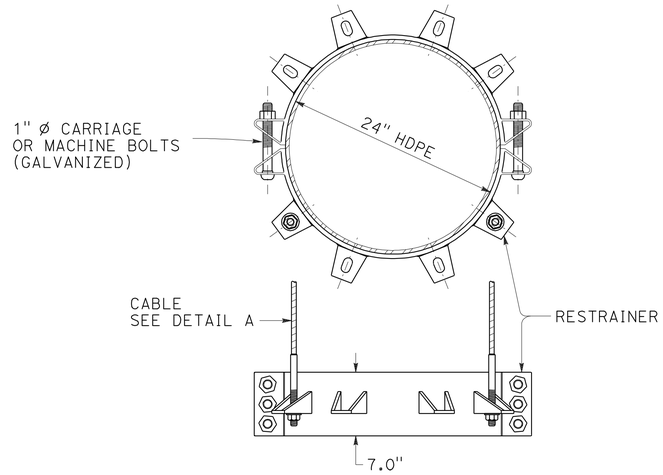

DETAIL C
RESTRAINER ASSEMBLY

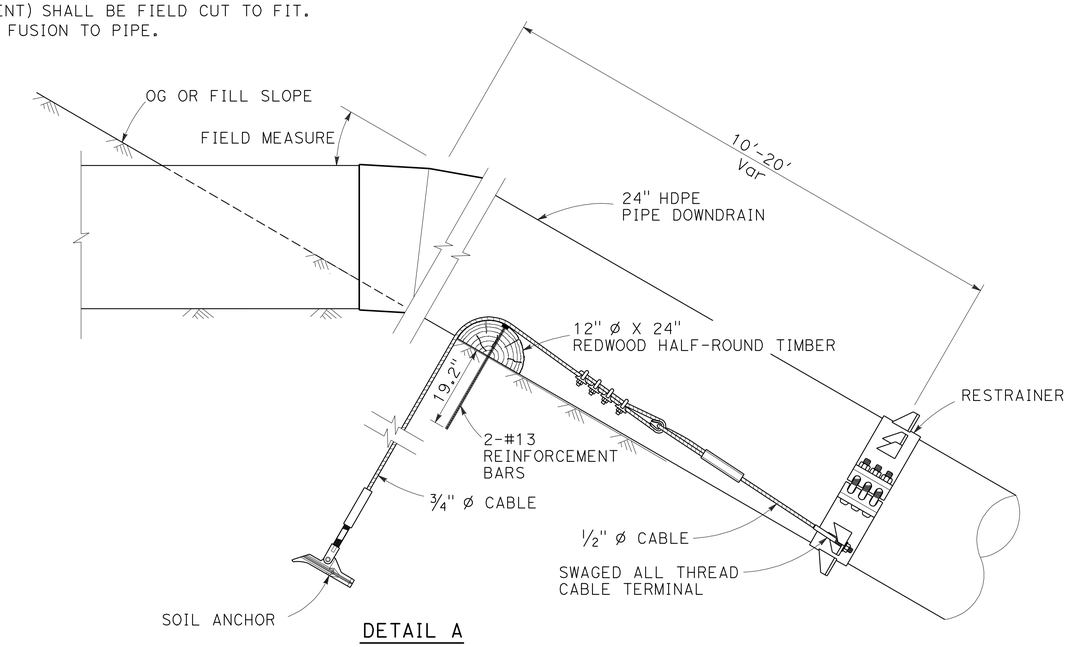

DETAIL A
EARTH ANCHORAGE SYSTEM DETAILS

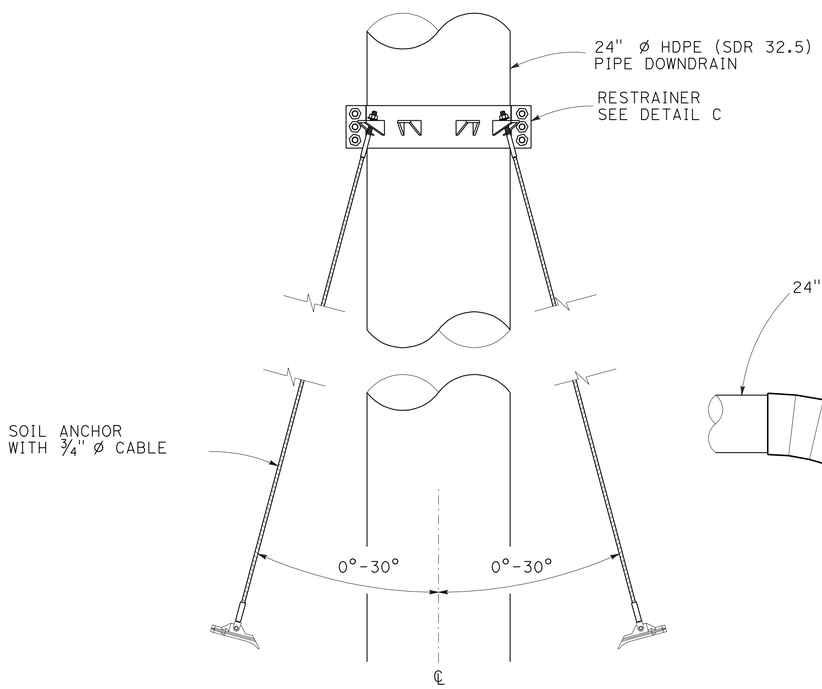

PLAN

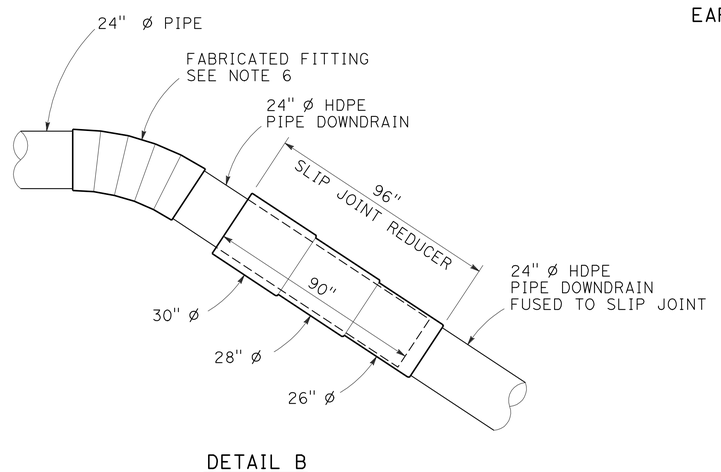

DETAIL B
DOWNDRAIN CONNECTION

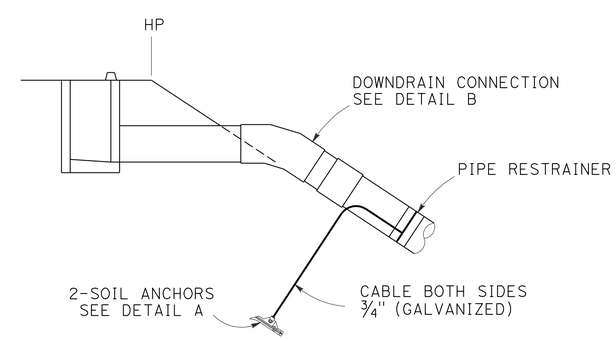

EARTH ANCHORAGE SYSTEM

DRAINAGE DETAILS

NO SCALE

DD-4

STATE OF CALIFORNIA - DEPARTMENT OF TRANSPORTATION
Caltrans® 06 - DESIGN

FUNCTIONAL SUPERVISOR: DAVID FAPP
CALCULATED-DESIGNED BY: JAMES ESPINOSA
CHECKED BY: ABRANA NARANJO
REVISED BY / DATE REVISED

LAST REVISION 12-28-09 | DATE PLOTTED => 12-MAY-2010 | TIME PLOTTED => 10:06

Dist	COUNTY	ROUTE	POST MILES TOTAL PROJECT	SHEET No.	TOTAL SHEETS
05	SLO	1	9.5/10.0	20	40

REGISTERED CIVIL ENGINEER 12-28-09 DATE

5-10-10
PLANS APPROVAL DATE

REGISTERED PROFESSIONAL ENGINEER
JAMES ESPINOSA
No. 54100
Exp. 12/31/11
CIVIL
STATE OF CALIFORNIA

THE STATE OF CALIFORNIA OR ITS OFFICERS OR AGENTS SHALL NOT BE RESPONSIBLE FOR THE ACCURACY OR COMPLETENESS OF SCANNED COPIES OF THIS PLAN SHEET.

NOTES:

1. WHERE PIPE OF DIFFERENT DIAMETERS ARE JOINED WITH A CONCRETE COLLAR, "L" SHALL BE THOSE OF THE LARGER PIPE. D=D1 OR D2 WHICHEVER IS GREATER.
2. JOIN PIPES AT INVERTS WHERE THE SLOPE OF THE DOWNSTREAM PIPE. AND JOIN PIPES AT SOFFIT WHERE THE SLOPE OF THE UPSTREAM PIPE IS GREATER THAN THE SLOPE OF THE DOWNSTREAM PIPE.
3. "b" BARS TO BE LOCKED AROUND LONGITUDINAL REINFORCEMENT. ROTATE BARS AS NECESSARY.
4. CONCRETE COLLAR SHOWN IS ADEQUATE FOR UP TO 40 FEET OF FILL.
5. FOR PIPE SIZE NOT LISTED USE NEXT LARGER.

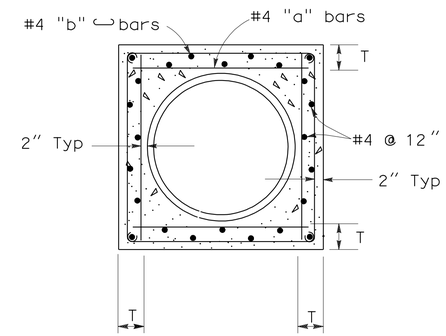

SECTION B-B

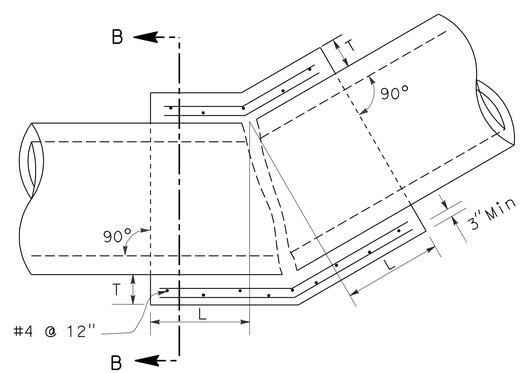

D	L	T	"a"	"b"
12"	1.0'	4"	@12"	
18"	1.0'	5"	@12"	
24"	1.0'	6"	@12"	
36"	1.5'	10"	@12"	
42"	1.5'	10"	@12"	
48"	1.5'	10"	@12"	
60"	1.75'	11"	@12"	
72"	2.0'	12"	@6"	@6"

TYPICAL CONCRETE COLLAR FIELD BEND

DRAINAGE DETAILS

NO SCALE

DD-5

STATE OF CALIFORNIA - DEPARTMENT OF TRANSPORTATION
Caltrans
06 - DESIGN

FUNCTIONAL SUPERVISOR: DAVID FAPP

CALCULATED-DESIGNED BY: ABRANA NARANJO
CHECKED BY: JAMES ESPINOSA

REVISED BY | DATE REVISED

LAST REVISION 12-28-09 | DATE PLOTTED => 12-MAY-2010 | TIME PLOTTED => 10:06

Dist	COUNTY	ROUTE	POST MILES TOTAL PROJECT	SHEET No.	TOTAL SHEETS
05	SLO	1	9.5/10.0	21	40

REGISTERED CIVIL ENGINEER 5-03-10 DATE

5-10-10
PLANS APPROVAL DATE

REGISTERED PROFESSIONAL ENGINEER JAMES ESPINOSA No. 54100 Exp. 12/31/11 CIVIL STATE OF CALIFORNIA

THE STATE OF CALIFORNIA OR ITS OFFICERS OR AGENTS SHALL NOT BE RESPONSIBLE FOR THE ACCURACY OR COMPLETENESS OF SCANNED COPIES OF THIS PLAN SHEET.

NOTES:

1. ALL PIPE JOINTS SHALL CONFORM TO REQUIREMENTS FOR STANDARD JOINTS.
2. MATERIALS FOR AFES SHALL BE METAL OR CONCRETE.

ALTERNATIVE PIPE CULVERTS		
ALLOWABLE PIPE MATERIAL		
DESIGNATION	RCP	PLASTIC
	SIZE (Inch)	SIZE (Inch)
24" APC	24	24

DRAINAGE QUANTITIES

DRAINAGE PLAN OR LAYOUT SHEET No.	DRAINAGE SYSTEM No. ⬡	DRAINAGE UNIT ○	FRAME AND GRATE (N)	MISCELANEOUS IRON AND STEEL	MINOR CONCRETE (MINOR STRUCTURE)	MAXIMUM COVER (N)	HEIGHT OF INLET OR MANHOLE "H" (N)	MANHOLE TYPE A	MANHOLE (N) FRAME AND COVER	24" APC	24" AFES	12" CSP (0.079" THICK)	24" HDPE OVERSIDE DRAIN	12" SLOTTED CORRUGATED STEEL PIPE (0.109 THICK)	REMOVE 12" SLOTTED CORRUGATED STEEL PIPE	REMOVE DOWNDRAIN	REMOVE PIPE	REMOVE INLET	ABANDON CULVERT	RSP 1/4TON METHOD B	RSP FABRIC	EARTH ANCHORAGE SYSTEM	12" ENTRANCE TAPER (TYPE1) ALTERNATIVE A	12" ANCHOR ASSEMBLY	DESCRIPTION	LOCATION/STATION	DRAINAGE PLAN	DRAINAGE SYSTEM No. ⬡	DRAINAGE UNIT ○
			EA	LB	CY	LF	LF	EA	EA	LF	EA	LF	LF	LF	LF	LF	LF	EA	LF	CY	SQYD	EA	EA	EA					
D-1	1	a	1	473	2.96		5.48																		GD-1 D1, GRATE 24-12X	19.35′ R+ "A" LINE/59+80.68	D-1	1	a
		b				3.94				6.6															24"APC				b
		c					6.92	1	1																MH	6.35′ R+ "A" LINE/59+81.36			c
		d				4.80				63															24"APC				d
		e					6.90	1	1																MH	5.81′ R+ "A" LINE/60+45.35			e
		f				4.80				119															24"APC				f
		g					6.92	1	1																MH	5.67′ R+ "A" LINE/61+66.97			g
		h				4.70				77															24"APC				h
		i					6.89	1	1																MH	6.29′ R+ "A" LINE/62+48.90			i
		j				4.70				133															24"APC				j
		k					6.88	1	1																MH	6.16′ R+ "A" LINE/63+85.24			k
		l				4.70				133															24"APC				l
		m					7.06	1	1																MH	4.76′ R+ "A" LINE/65+20.03			m
		n				4.37				9.5															24"APC				n
		o	1	473	2.85		5.27																		GD-1 D1, GRATE 24-12X	18.84′ R+ "A" LINE/65+18.68			o
		p												33.5											12" SCSP				p
		q											185									5			24" HDPE OVERSIDE DOWNDRAIN				q
		r									1														24"AFES				r
		s																		13.8	43				RSP				s
		t	1	473	3.78		6.51																		GD-1 D1, GRATE 24-12X	12.31′ L+ "A" LINE/65+23.29			t
		u																1							REMOVE INLET	18.84′ R+ "A" LINE/65+18.68			u
		v													33.5										REMOVE 12" SCSP				v
		w																	185						ABANDON CULVERT				w
		x																1							REMOVE INLET	19.35′ R+ "A" LINE/59+81.29			x
		y				4.92				16.0															24"APC				y
		z															18								REMOVE PIPE				z
D-1	2	a									1														24" AFES		D-1	2	a
		b				2.46				19.5															24" APC				b
		c															19.5								REMOVE 24" CMP				c
D-2	3	a										25.0											1	1	12" AP DOWNDRAIN	20.60′ L+ "A" LINE/78+19.07	D-2	3	a
		b														24.8									REMOVE 8" DOWNDRAIN	20.60′ L+ "A" LINE/78+19.07			b
D-2	4	a																1							REMOVE INLET	16.54′ R+ "A" LINE/78+30.72	D-2	4	a
		b	1	473	1.62		3.00																		GD-1 D1, GRATE 24-12X	16.54′ R+ "A" LINE/78+30.72			b
TOTAL				1892	11.21			6		576.6	2	25.0	185	33.5	33.5	24.8	37.5	3	185	13.8	43	5	1	1			TOTAL		

(N) - NOT A SEPARATE PAY ITEM, FOR INFORMATION ONLY.

DRAINAGE QUANTITIES

DQ-1

STATE OF CALIFORNIA - DEPARTMENT OF TRANSPORTATION
Caltrans®
06 - DESIGN

FUNCTIONAL SUPERVISOR: DAVID FAPP
CALCULATED-DESIGNED BY: ABRANA NARANJO
CHECKED BY: JAMES ESPINOSA
REVISED BY / DATE REVISED

LAST REVISION 04-26-10
DATE PLOTTED => 12-MAY-2010
TIME PLOTTED => 10:06

Dist	COUNTY	ROUTE	POST MILES TOTAL PROJECT	SHEET No.	TOTAL SHEETS
05	SLO	1	9.5/10.0	22	40

REGISTERED CIVIL ENGINEER 12-28-09 DATE

5-10-10
PLANS APPROVAL DATE

REGISTERED PROFESSIONAL ENGINEER JAMES ESPINOSA No. 54100 Exp. 12/31/11 CIVIL STATE OF CALIFORNIA

THE STATE OF CALIFORNIA OR ITS OFFICERS OR AGENTS SHALL NOT BE RESPONSIBLE FOR THE ACCURACY OR COMPLETENESS OF SCANNED COPIES OF THIS PLAN SHEET.

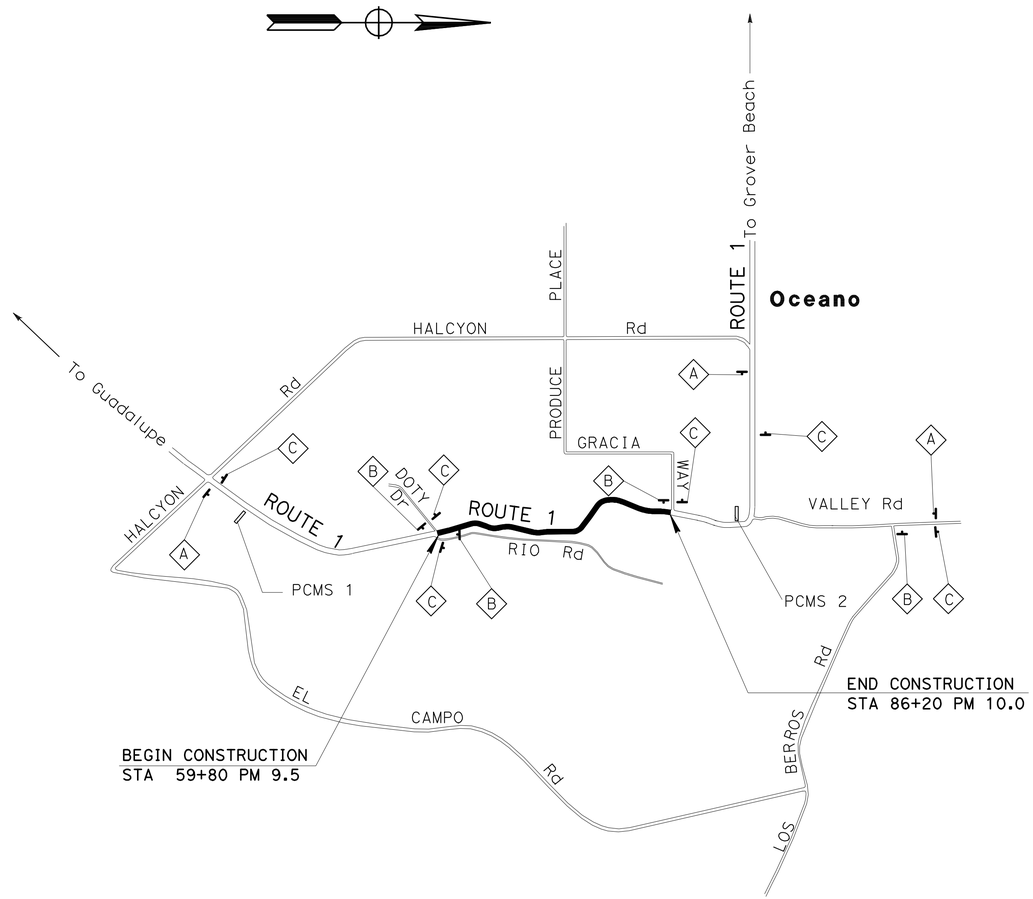

STATIONARY MOUNTED CONSTRUCTION AREA SIGNS

SIGN No.	SIGN CODE	PANEL SIZE (in)	SIGN MESSAGE	No. OF POST AND SIZE (in)	No. OF SIGN
A	W20-1	48" x 48"	ROAD WORK AHEAD	4" x 6"	3
B	W20-1	36" x 36"	ROAD WORK AHEAD	4" x 6"	4
C	G20-2	36" x 18"	END ROAD WORK	4" x 4"	6
TOTAL					13

NOTE:
SIGN LOCATIONS ARE APPROXIMATE. EXACT LOCATIONS TO BE DETERMINED BY THE ENGINEER.

ABBREVIATION

PCMS = PORTABLE CHANGEABLE MESSAGE SIGN

THIS PLAN ACCURATE FOR CONSTRUCTION AREA SIGN WORK ONLY.

CONSTRUCTION AREA SIGNS

NO SCALE

CS-1

REVISED BY | DATE REVISED
ABRANA NARANJO | JAMES ESPINOSA
CALCULATED-DESIGNED BY | CHECKED BY
FUNCTIONAL SUPERVISOR
DAVID FAPP
STATE OF CALIFORNIA - DEPARTMENT OF TRANSPORTATION
Caltrans
06 - DESIGN

LAST REVISION 12-28-09 | DATE PLOTTED => 12-MAY-2010 | TIME PLOTTED => 10:07

Dist	COUNTY	ROUTE	POST MILES TOTAL PROJECT	SHEET No.	TOTAL SHEETS
05	SLO	1	9.5/10.0	23	40

REGISTERED CIVIL ENGINEER 12-28-09 DATE

5-10-10
PLANS APPROVAL DATE

REGISTERED PROFESSIONAL ENGINEER JAMES ESPINOSA No. 54100 Exp. 12/31/11 CIVIL STATE OF CALIFORNIA

THE STATE OF CALIFORNIA OR ITS OFFICERS OR AGENTS SHALL NOT BE RESPONSIBLE FOR THE ACCURACY OR COMPLETENESS OF SCANNED COPIES OF THIS PLAN SHEET.

NOTES:

1. LOCATIONS OF CONSTRUCTION AREA SIGNS SHOWN APPROXIMATE. EXACT LOCATIONS WILL BE DETERMINED BY ENGINEER.
2. FOR ADDITIONAL CONSTRUCTION AREA SIGNS SEE SHEET CS-1.

LEGEND

STATIONARY MOUNTED SIGN

DIRECTION OF TRUCK TRAFFIC

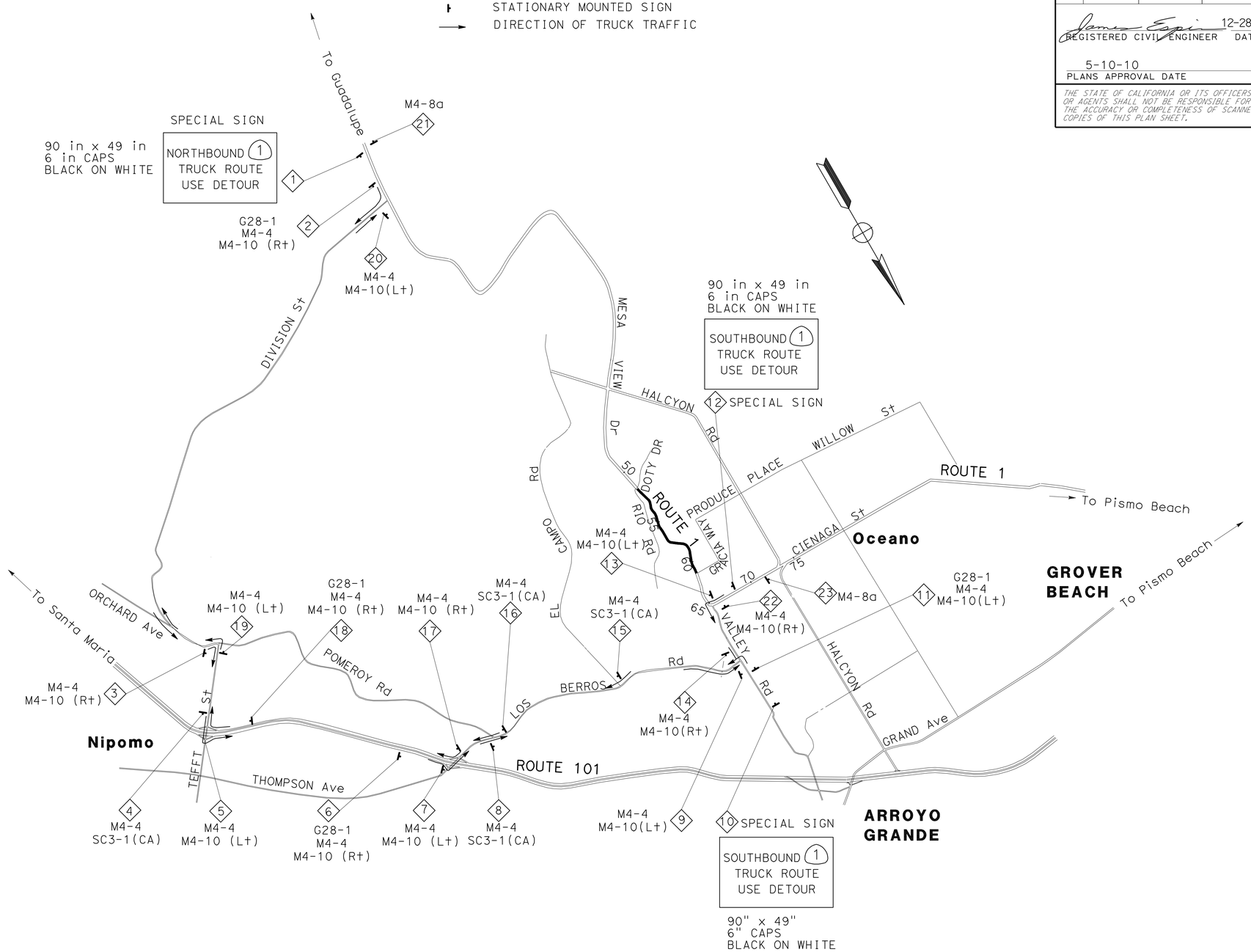

DETOUR PLAN
(TRUCK DETOUR)

NO SCALE

DE-1

THIS PLAN ACCURATE FOR DETOUR PLAN ONLY.

STATE OF CALIFORNIA - DEPARTMENT OF TRANSPORTATION

Caltrans

06 - DESIGN

FUNCTIONAL SUPERVISOR: DAVID FAPP

CALCULATED-DESIGNED BY: ABRANA NARANJO

CHECKED BY: JAMES ESPINOSA

REVISED BY | DATE REVISED

LAST REVISION 12-28-09

DATE PLOTTED => 12-MAY-2010
TIME PLOTTED => 10:07

Dist	COUNTY	ROUTE	POST MILES TOTAL PROJECT	SHEET No.	TOTAL SHEETS
05	SLO	1	9.5/10.0	24	40

REGISTERED CIVIL ENGINEER 12-28-09 DATE

5-10-10
PLANS APPROVAL DATE

REGISTERED PROFESSIONAL ENGINEER JAMES ESPINOSA No. 54100 Exp. 12/31/11 CIVIL STATE OF CALIFORNIA

THE STATE OF CALIFORNIA OR ITS OFFICERS OR AGENTS SHALL NOT BE RESPONSIBLE FOR THE ACCURACY OR COMPLETENESS OF SCANNED COPIES OF THIS PLAN SHEET.

NOTES:

1. LOCATIONS OF CONSTRUCTION AREA SIGNS SHOWN APPROXIMATE. EXACT LOCATIONS WILL BE DETERMINED BY ENGINEER.

2. FOR ADDITIONAL CONSTRUCTION AREA SIGNS SEE SHEET CS-1.

CONSTRUCTION AREA SIGNS (STATIONARY MOUNTED)

SHEET No.	SIGN No. ◇	SIGN CODE	NO. OF POST AND PANEL SIZE (INCHES)	REMARKS
DE-1	1	SPECIAL SIGN	85 x 42	NORTHBOUND (1) TRUCK ROUTE USE DETOUR
	2	G28-1	25 x 28	STATE SHIELD ROUTE 1
		M4-4	30 x 15	TRUCK
		M4-10(R†)	48 x 48	DETOUR (RIGHT ARROW)
	3	M4-4	30 x 15	TRUCK
		M4-10(R†)	48 x 48	DETOUR (RIGHT ARROW)
	4	M4-4	30 x 15	TRUCK
		SC3-1(CA)	48 x 48	DETOUR (THROUGH ARROW)
	5	M4-4	30 x 15	TRUCK
		M4-10(L†)	48 x 48	DETOUR (LEFT ARROW)
	6	G28-1	25 x 28	STATE SHIELD ROUTE 1
		M4-4	30 x 15	TRUCK
		M4-10(R†)	48 x 48	DETOUR (RIGHT ARROW)
	7	M4-4	30 x 15	TRUCK
		M4-10(L†)	48 x 48	DETOUR (LEFT ARROW)
	8	M4-4	30 x 15	TRUCK
		SC3-1(CA)	48 x 48	DETOUR (THROUGH ARROW)
	9	M4-4	30 x 15	TRUCK
		M4-10(L†)	24 x 18	DETOUR (LEFT ARROW)
	10	SPECIAL SIGN	85 x 42	SOUTHBOUND (1) TRUCK ROUTE USE DETOUR
	11	G28-1	25 x 28	STATE SHIELD ROUTE 1
		M4-4	30 x 15	TRUCK
		M4-10(L†)	48 x 48	DETOUR (LEFT ARROW)
	12	SPECIAL SIGN	85 x 42	SOUTHBOUND (1) TRUCK ROUTE USE DETOUR
	13	M4-4	30 x 15	TRUCK
		M4-10(L†)	48 x 48	DETOUR (LEFT ARROW)
	14	M4-4	30 x 15	TRUCK
		M4-10(R†)	48 x 48	DETOUR (RIGHT ARROW)
	15	M4-4	30 x 15	TRUCK
		SC3-1(CA)	48 x 48	DETOUR (THROUGH ARROW)
	16	M4-4	30 x 15	TRUCK
		SC3-1(CA)	48 x 48	DETOUR (THROUGH ARROW)
	17	M4-4	30 x 15	TRUCK
		M4-10(R†)	48 x 48	DETOUR (RIGHT ARROW)
	18	G28-1	25 x 28	STATE SHIELD ROUTE 1
		M4-4	30 x 15	TRUCK
		M4-10(R†)	48 x 48	DETOUR (RIGHT ARROW)
	19	M4-4	30 x 15	TRUCK
		M4-10(L†)	48 x 48	DETOUR (LEFT ARROW)
	20	M4-4	30 x 15	TRUCK
		M4-10(L†)	48 x 48	DETOUR (LEFT ARROW)
	21	M4-8a	24 x 18	END DETOUR
	22	M4-4	30 x 15	TRUCK
		M4-10(R†)	48 x 48	DETOUR (RIGHT ARROW)
	23	M4-8a	24 x 18	END DETOUR

DETOUR QUANTITIES

DEQ-1

STATE OF CALIFORNIA - DEPARTMENT OF TRANSPORTATION
Caltrans
06 - DESIGN

FUNCTIONAL SUPERVISOR: DAVID FAPP
CALCULATED-DESIGNED BY: ABRANA NARANJO
CHECKED BY: JAMES ESPINOSA
REVISED BY
DATE REVISED

LAST REVISION 12-28-09
DATE PLOTTED => 12-MAY-2010
TIME PLOTTED => 10:07

Dist	COUNTY	ROUTE	POST MILES TOTAL PROJECT	SHEET No.	TOTAL SHEETS
05	SLO	1	9.5/10.0	25	40

REGISTERED CIVIL ENGINEER 12-28-09 DATE

5-10-10
PLANS APPROVAL DATE

REGISTERED PROFESSIONAL ENGINEER JAMES ESPINOSA No. 54100 Exp. 12/31/11 CIVIL STATE OF CALIFORNIA

THE STATE OF CALIFORNIA OR ITS OFFICERS OR AGENTS SHALL NOT BE RESPONSIBLE FOR THE ACCURACY OR COMPLETENESS OF SCANNED COPIES OF THIS PLAN SHEET.

NOTE: FOR ACCURATE RIGHT OF WAY AND ACCESS DATA, CONTACT RIGHT OF WAY ENGINEERING AT DISTRICT OFFICE.

LEGEND

- (XX) THERMOPLASTIC TRAFFIC STRIPE (SPRAYABLE) DETAIL No.
- (1) ROADSIDE SIGN (WITH NUMBER)
- F DELINEATOR (CLASS 1, TYPE F)
- LI OBJECT MARKER (TYPE OM2-1V)
- GR F GUARD RAILING DELINEATOR (TYPE F REFLECTOR)
- ● RESET ROADSIDE SIGN WOOD POST
- ⇨ DIRECTION OF TRAFFIC FLOW

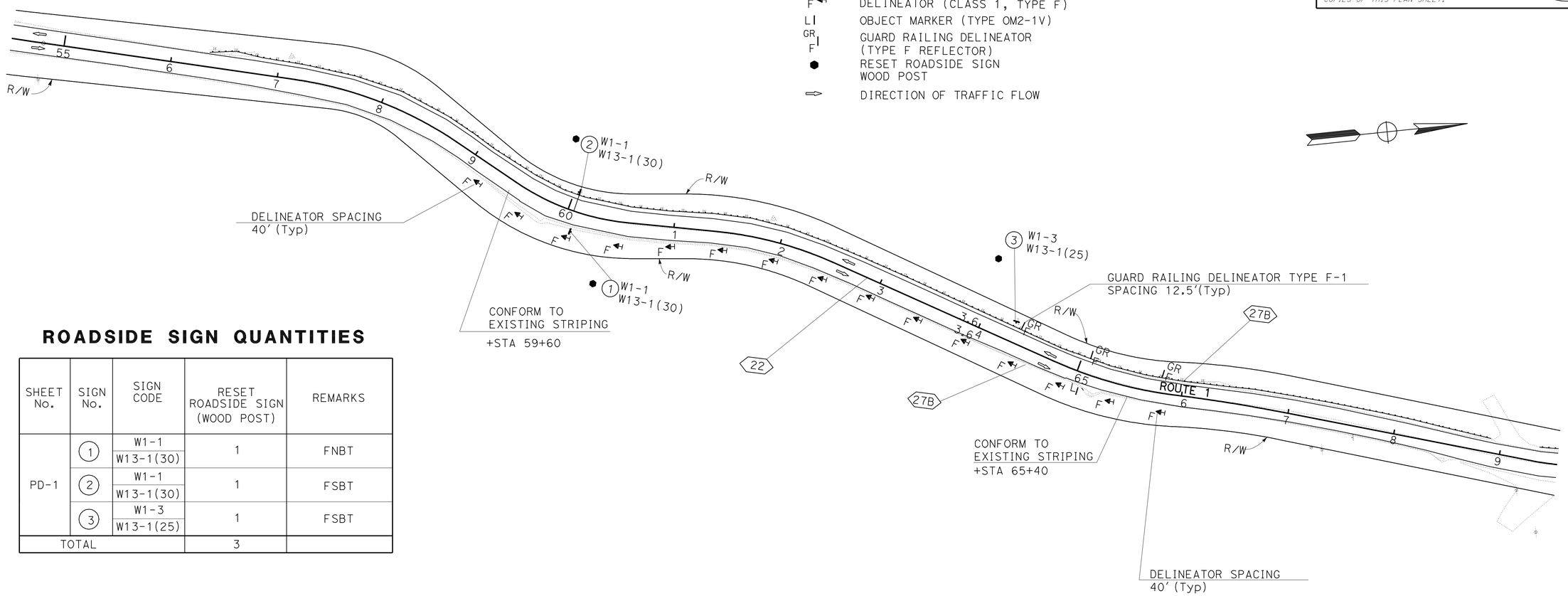

ROADSIDE SIGN QUANTITIES

SHEET No.	SIGN No.	SIGN CODE	RESET ROADSIDE SIGN (WOOD POST)	REMARKS
PD-1	(1)	W1-1 W13-1(30)	1	FNBT
	(2)	W1-1 W13-1(30)	1	FSBT
	(3)	W1-3 W13-1(25)	1	FSBT
TOTAL			3	

PAVEMENT DELINEATION QUANTITIES

SHEET No.	LOCATION	DETAIL No.	(N) REMOVE PAVEMENT MARKER	PAVEMENT MARKER (RETROREFLECTIVE)	THERMOPLASTIC TRAFFIC STRIPE (SPRAYABLE)		(N) REMOVE DELINEATOR	GUARD RAILING DELINEATOR	DELINEATOR (CLASS 1)	OBJECT MARKER
				TYPE D	YELLOW 4 INCH	WHITE 4 INCH	TYPE F-1	TYPE F-1	TYPE F-1	TYPE OM2-1V
			EA	EA	LF		EA	EA	EA	EA
PD-1 THRU PD-2	From 59+60.00 TO 65+40.00	22	52	52	1160		3	3	10	1
		27B				730				
SUBTOTAL			52	52	1160	730	3	3	10	1
TOTAL				52	1890			3	10	1

(N)- NOT A SEPARATE PAY ITEM, FOR INFORMATION ONLY.

THIS PLAN ACCURATE FOR PAVEMENT DELINEATION AND SIGN PLAN.

PAVEMENT DELINEATION AND SIGN PLAN

SCALE: 1" = 50'

PD-1

REVISED BY | DATE REVISED
ABRANA NARANJO | JAMES ESPINOSA
CALCULATED-DESIGNED BY | CHECKED BY
FUNCTIONAL SUPERVISOR | DAVID FAPP
STATE OF CALIFORNIA - DEPARTMENT OF TRANSPORTATION
Caltrans
06 - DESIGN

LAST REVISION 12-28-09 | DATE PLOTTED => 12-MAY-2010 | TIME PLOTTED => 10:07

Dist	COUNTY	ROUTE	POST MILES TOTAL PROJECT	SHEET No.	TOTAL SHEETS
05	SLO	1	9.5/10.0	26	40

REGISTERED CIVIL ENGINEER 5-03-10 DATE

5-10-10
PLANS APPROVAL DATE

REGISTERED PROFESSIONAL ENGINEER JAMES ESPINOSA No. 54100 Exp. 12/31/11 CIVIL STATE OF CALIFORNIA

THE STATE OF CALIFORNIA OR ITS OFFICERS OR AGENTS SHALL NOT BE RESPONSIBLE FOR THE ACCURACY OR COMPLETENESS OF SCANNED COPIES OF THIS PLAN SHEET.

ROADWAY QUANTITIES

STATION	TACK COAT	HMA (TYPE A)	HMA (OPEN GRADED)	COLD PLANE AC PAVEMENT
	TON	TON	TON	SQYD
59+60 - 65+40	2.4	320	40	900
HMA DIKE		6.8		
TOTAL	2.4	326.8	40	900

TEMPORARY WATER POLLUTION CONTROL

SHEET No.	STATION	TEMPORARY DRAINAGE INLET PROTECTION	TEMPORARY Const ENTRANCE
		EA	EA
D-1	59+80.00	1	
D-1	65+20.03	1	
D-2	78+30.72	1	
TOTAL		3	1

PLACE HMA DIKE AND REMOVE AC DIKE

STATION	DIRECTION	PLACE HMA DIKE (TYPE F)	REMOVE AC DIKE	HMA (TYPE A) *
		LF	LF	TON
61+34.09-62+39.04	SB	104.95	148.74	1.5
64+46.68-65+95.42	SB	148.74		2.0
77+38.52-78+30.23	SB	91.71	91.71	1.3
TOTAL		345.40	240.45	6.8

* QUANITY INCLUDED ON ROADWAY QUANTITIES

TEMPORARY FENCE (TYPE ESA)

SHEET No.	STATION	LF
EC-1	"A" 65+48.30	78
EC-2	"A" 78+06.90	81
	"A" 78+31.60	81
TOTAL		240

METAL BEAM GUARD RAILING

STATION	RECONSTRUCTED MBGR (STEEL POST)
	LF
64+46.68 - 65+95.42	150
77+38.52 - 78+30.23	92
TOTAL	242

EROSION CONTROL QUANTITIES

SHEET No.	LOCATION		EROSION CONTROL	AREA	EROSION CONTROL (COMPOST BLANKET)	ROLLE EROSION CONTROL PRODUCT (NETTING)	FIBER ROLL	EROSION CONTROL (HYDROSEED)	SEED (N)	FIBER (N)	STABILIZING EMULSION (N)
	BEGIN	END		ACRE	CY	SQFT	LF	SQFT	LB	LB	LB
EC-1	"A" LINE 65+07.67	"A" LINE 65+45.39	TYPE 1	0.39	106	17,186	630	17,186	21.70	592	59
EC-2	"A" LINE 78+09.95	"A" LINE 78+33.54	TYPE 1	0.12	31	5,080	144	5,080	6.41	175	17
TOTAL				0.51	137	22,266	774	22,266			

NOTE: (N) NOT A SEPARATE PAY ITEM, FOR INFORMATION ONLY.

SUMMARY OF QUANTITIES

Q-1

REVISED BY | DATE REVISED
ABRANA NARANJO | JAMES ESPINOSA
CALCULATED-DESIGNED BY | CHECKED BY
FUNCTIONAL SUPERVISOR: DAVID FAPP

STATE OF CALIFORNIA - DEPARTMENT OF TRANSPORTATION
Caltrans
06 - DESIGN

LAST REVISION 04-28-10 | DATE PLOTTED => 12-MAY-2010 | TIME PLOTTED => 10:07

DIST	COUNTY	ROUTE	POST MILES TOTAL PROJECT	SHEET NO.	TOTAL SHEETS
05	SLO	1	9.5/10.0	27	40

Randell D. Hiatt
REGISTERED CIVIL ENGINEER

June 6, 2008
PLANS APPROVAL DATE

REGISTERED PROFESSIONAL ENGINEER
Randell D. Hiatt
No. C50200
Exp. 6-30-09
CIVIL
STATE OF CALIFORNIA

The State of California or its officers or agents shall not be responsible for the accuracy or completeness of electronic copies of this plan sheet.

To accompany plans dated 5-10-10

NOTES:

1. When necessary to place dike in front of face of guard railing, only Type C dike may be used. For dike details, see Standard Plan A87B.
2. For standard railing post embedment, see Standard Plans A77C3.
3. Guard railing delineation to be used where shown on the Project Plans.
4. When dike or curb is placed under guard railing, the maximum height of the dike or curb shall be 4". Mountable dike should not be used. For dike and curb details, see Revised Standard Plans RSP A87A and Standard Plan A87B.
5. For details of typical distance between the face of rail and hinge point, see Standard Plan A77C3.

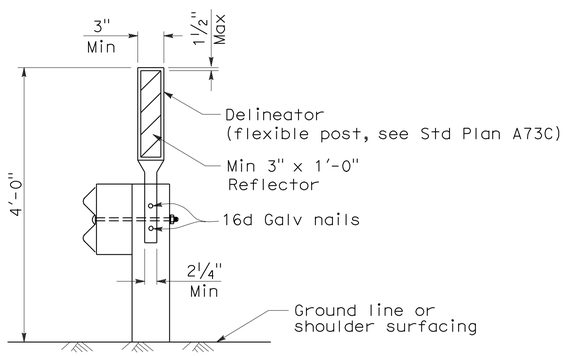

GUARD RAILING DELINEATION

See Note 3

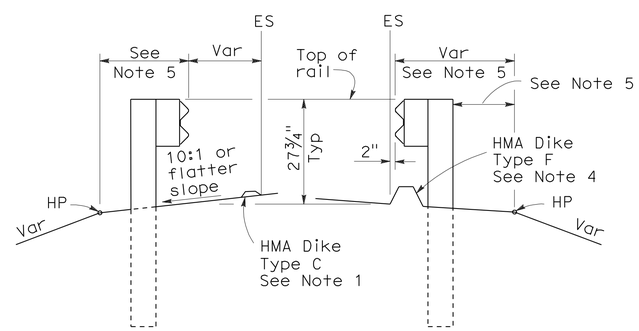

DIKE POSITIONING

See Note 1

STATE OF CALIFORNIA
DEPARTMENT OF TRANSPORTATION

METAL BEAM GUARD RAILING TYPICAL RAILING DELINEATION AND DIKE POSITIONING DETAILS

NO SCALE

RSP A77C4 DATED JUNE 6, 2008 SUPERSEDES STANDARD PLAN A77C4
DATED MAY 1, 2006 - PAGE 47 OF THE STANDARD PLANS BOOK DATED MAY 2006.

REVISED STANDARD PLAN RSP A77C4

2006 REVISED STANDARD PLAN RSP A77C4

12-10-07

DIST	COUNTY	ROUTE	POST MILES TOTAL PROJECT	SHEET NO.	TOTAL SHEETS
05	SLO	1	9.5/10.0	28	40

Raymond Don Tsztoo
REGISTERED CIVIL ENGINEER

June 6, 2008
PLANS APPROVAL DATE

REGISTERED PROFESSIONAL ENGINEER
Raymond Don Tsztoo
No. C37332
Exp. 6-30-08
CIVIL
STATE OF CALIFORNIA

The State of California or its officers or agents shall not be responsible for the accuracy or completeness of electronic copies of this plan sheet.

To accompany plans dated 5-10-10

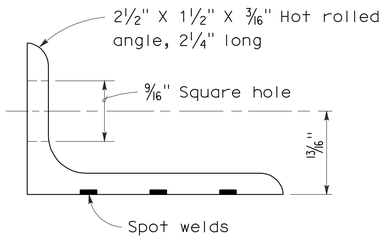

ANGLE

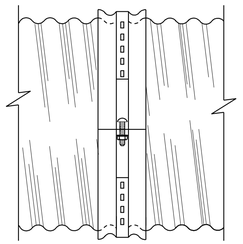

SIDE VIEW
ANGLE

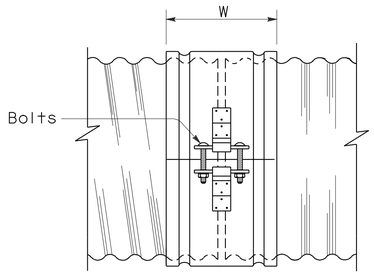

SIDE VIEW
SINGLE BAR AND STRAP

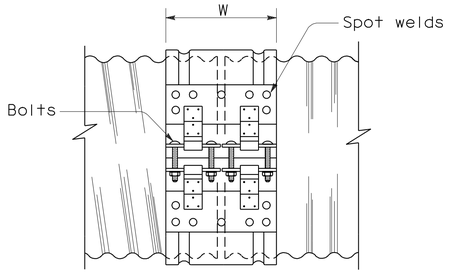

SIDE VIEW
DOUBLE BAR AND STRAP

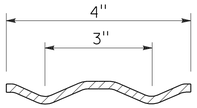

SECTION

H-4 HUGGER BAND

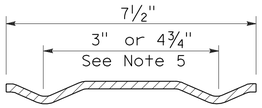

SECTION

H-7 HUGGER BAND

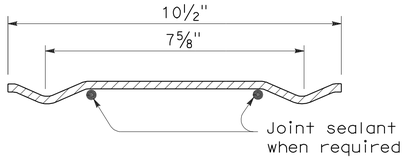

SECTION

H-10 HUGGER BAND

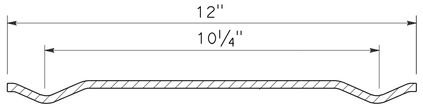

SECTION

H-12 HUGGER BAND

HUGGER COUPLING BANDS

NOTES:

1. All ferrous metal coupling band connection hardware shall be galvanized or electroplated in accordance with the Standard Specifications.
2. Dimensions and thicknesses shown are minimum.
3. Spot welds shall develop minimum required strength of strap.
4. Fillet welds of equivalent strength may be substituted for spot welds or rivets.
5. Dimension depends upon whether end condition is lips up or lips down.

STATE OF CALIFORNIA
DEPARTMENT OF TRANSPORTATION

CORRUGATED METAL PIPE COUPLING DETAILS No. 4 HUGGER COUPLING BANDS

NO SCALE

RSP D97D DATED JUNE 6, 2008 SUPERSEDES STANDARD PLAN D97D
DATED MAY 1, 2006 - PAGE 186 OF THE STANDARD PLANS BOOK DATED MAY 2006.

REVISED STANDARD PLAN RSP D97D

2006 REVISED STANDARD PLAN RSP D97D

3-24-08

DIST	COUNTY	ROUTE	POST MILES TOTAL PROJECT	SHEET NO.	TOTAL SHEETS
05	SLO	1	9.5/10.0	29	40

Raymond Don Tsztoo
REGISTERED CIVIL ENGINEER

June 6, 2008
PLANS APPROVAL DATE

REGISTERED PROFESSIONAL ENGINEER Raymond Don Tsztoo No. C37332 Exp. 6-30-08 CIVIL STATE OF CALIFORNIA

The State of California or its officers or agents shall not be responsible for the accuracy or completeness of electronic copies of this plan sheet.

ANNULAR AND HELICAL PROFILE

COUPLING TYPE	PIPE CORRUGATION	PIPE SIZE	W OR A	PIPE WALL THICKNESS CSP	PIPE WALL THICKNESS CAP	BAND THICKNESS CSP	BAND THICKNESS CAP	BAR AND STRAP (CSP ONLY) STRAP THICKNESS	BOLTS Dia	BAR Dia	BAR YIELD STRENGTH	ANGLE DIMENSIONS CSP	ANGLE DIMENSIONS CAP	BOLTS (No.- Dia) CSP	BOLTS (No.- Dia) CAP	RIVETS ANGLE TO BAND CSP	RIVETS ANGLE TO BAND CAP	SPOT WELDS ANGLE TO BAND CSP
TWO PIECE INTEGRAL FLANGE	1½′ × ¼"	6"-10"	7"	0.052"-0.079"	0.048"-0.060"	0.052"	0.060"							2-⅜"	2-⅜"			
		12"-18"	7"	0.052"-0.079"		0.064"								2-½"				
	2⅔" × ½"	12"-24"	7"	0.052"-0.079"	0.060"-0.105"	0.064"	0.060"							2-½"	2-½"			
UNIVERSAL	2⅔" × ½"	THROUGH 36"	12"	0.052"-0.138"	0.060"-0.135"	0.052"	0.060"					2" × 2" × 3/16"	2" × 2" × 3/16"	3-½"	3-½"	3-⅜"	3-⅜"	3-½"
		42"-60"	12"	0.052"-0.168"	0.075"-0.164"	0.052"	0.060"					2" × 2" × 3/16"	2" × 2" × 3/16"	3-½"	3-½"	3-⅜"	3-⅜"	5-½"
		THROUGH 72"	12"	0.052"-0.168"	0.164"	0.052"	0.105"	0.079"	½"	⅞"	32 ksi	2" × 2" × 3/16"	2" × 2" × 3/16"	3-½"	3-½"	3-⅜"	3-⅜"	5-½"
		78"-84"	16¼"	0.168"		0.079"		DOUBLE 0.079"	½"	⅞"	32 ksi							
ANNULAR	2⅔" × ½"	THROUGH 36"	7"	0.064"-0.138"	0.060"-0.135"	0.052"	0.060"	0.079"	½"	⅞"	32 ksi	2" × 2" × 3/16"	2" × 2" × 3/16"	2-½"	2-½"	3-⅜"	3-⅜"	3-½"
		42"-72"	12"	0.064"-0.168"	0.075"-0.164"	0.052"	0.105"	0.079"	½"	⅞"	32 ksi	2" × 2" × 3/16"	2" × 2" × 3/16"	3-½"	3-½"	3-⅜"	3-⅜"	5-½"
		78"-84"	12"	0.168"		0.079"		0.109"	½"	⅞"	45 ksi	2" × 2" × 3/16"		3-½"		3-⅜"		5-½"
	3" × 1"	48"-90"	14"	0.064"-0.109"		0.052"		0.079"	½"	⅞"	32 ksi	2" × 2" × 3/16"		3-½"		3-⅜"		5-½"
		96"-120"	14"	0.079"-0.109"		0.052"		0.109"	½"	⅞"	45 ksi	2" × 2" × 3/16"		3-½"		4-⅜"		
		42"-108"	14"		0.060"-0.135"		0.060"						2" × 2" × 3/16"		3-½"		3-⅜"	
HELICAL	2⅔" × ½"	THROUGH 36"	12"	0.052"-0.138"	0.060"-0.135"	0.052"	0.060"	0.079"	½"	⅞"	32 ksi	2" × 2" × 3/16"	2" × 2" × 3/16"	3-½"	3-½"	3-⅜"	3-⅜"	3-½"
		42"-72"	12"	0.052"-0.168"	0.075"-0.164"	0.052"	0.060"	0.079"	½"	⅞"	32 ksi	2" × 2" × 3/16"	2" × 2" × 3/16"	3-½"	3-½"	3-⅜"	3-⅜"	5-½"
		78"-84"	12"	0.168"		0.079"		0.109"	½"	⅞"	45 ksi	2" × 2" × 3/16"		3-½"		3-⅜"		5-½"
	3" × 1"	48"-90"	14"	0.064"-0.109"		0.052"		0.079"	½"	⅞"	32 ksi	2" × 2" × 3/16"		3-½"		3-⅜"		5-½"
		96"-120"	14"	0.079"-0.109"		0.052"		0.109"	½"	⅞"	45 ksi	2" × 2" × 3/16"		3-½"		4-⅜"		
		42"-108"	14"		0.060"-0.135"		0.060"						2" × 2" × 3/16"		3-½"		3-⅜"	
HUGGER	2⅔" × ½" REROLLED END	12"-54"	4"	0.052"-0.109"		0.052"						2½" × 1½" × 3/16"	2½" × 1½" × 3/16"	1-½"				3-½"
		60"-66"	4"	0.109"		0.064"						2½" × 1½" × 3/16"	2½" × 1½" × 3/16"	1-½"				3-½"
		36"-48"	4"	0.138"		0.064"						2½" × 1½" × 3/16"	2½" × 1½" × 3/16"	1-½"				3-½"
		THROUGH 72"	10½"	0.052"-0.168"		0.052"		0.079"	½"	⅞"	32 ksi							
		78"-84"	10½"	0.168"		0.079"		0.109"	½"	⅞"	45 ksi							
	3" × 1" REROLLED END	48"-90"	10½"	0.064"-0.109"		0.052"		0.079"	½"	⅞"	32 ksi							
		96"-120"	10½"	0.079"-0.109"		0.052"		0.109"	½"	⅞"	45 ksi							
	5" × 1" REROLLED END	48"-66"	7½"	0.064"-0.109"		0.064"		0.079"	½"	⅞"	32 ksi	2½" × 1½" × 3/16"	2½" × 1½" × 3/16"	1-½"				3-½"
		72"-90"	7½"	0.064"-0.079"		0.064"		0.079"	½"	⅞"	32 ksi	2½" × 1½" × 3/16"	2½" × 1½" × 3/16"	1-½"				3-½"
		48"-90"	7½"	0.064"-0.138"		0.064"		0.079"	½"	⅞"	32 ksi							
		48"-120"	12" SEE	0.064"-0.109"		0.064"		0.079"	½"	⅞"	32 ksi							
		48"-84"	12" NOTE	0.138"		0.064"		0.079"	½"	⅞"	32 ksi							
		90"-120"	12" 11	0.138"		0.064"		DOUBLE 0.079"	½"	⅞"	32 ksi							

SPIRAL RIB PROFILE

COUPLING TYPE	PIPE CORRUGATION	PIPE SIZE	W	PIPE WALL THICKNESS SSRP	PIPE WALL THICKNESS ASRP	BAND THICKNESS SSRP	BAND THICKNESS ASRP	BAR AND STRAP (SSRP ONLY) STRAP THICKNESS	BOLTS Dia	BAR Dia	BAR YIELD STRENGTH	ANGLE DIMENSIONS SSRP	ANGLE DIMENSIONS ASRP	BOLTS (No.- Dia) SSRP	BOLTS (No.- Dia) ASRP	RIVETS ANGLE TO BAND SSRP	RIVETS ANGLE TO BAND ASRP	SPOT WELDS ANGLE TO BAND SSRP
ANNULAR	2⅔" × ½" * REROLLED END	24"-36"	12"	0.064"-0.109"	0.060"-0.105"	0.052"	0.060"	0.079"	½"	⅞"	32 ksi	2" × 2" × 3/16"	2" × 2" × 3/16"	3-½"	3-½"	3-⅜"	3-⅜"	5-½"
		42"-60"	12"	0.064"-0.109"	0.075"-0.105"	0.052"	0.105"	0.079"	½"	⅞"	32 ksi	2" × 2" × 3/16"	2" × 2" × 3/16"	3-½"	3-½"	3-⅜"	3-⅜"	5-½"
		66"-72"	12"	0.064"-0.109"		0.052"		0.079"	½"	⅞"	32 ksi	2" × 2" × 3/16"	2" × 2" × 3/16"	3-½"	3-½"	3-⅜"	3-⅜"	5-½"
		78"-114"	12"	0.079"-0.109"		0.079"		0.109"	½"	⅞"	45 ksi	2" × 2" × 3/16"	2" × 2" × 3/16"	3-½"	3-½"	3-⅜"	3-⅜"	5-½"
HUGGER	2⅔" × ½" * REROLLED END	24"-72"	10½"	0.064"-0.109"		0.052"		0.079"	½"	⅞"	32 ksi							
		78"-84"	10½"	0.109"		0.079"		0.109"	½"	⅞"	45 ksi							

* See Note 14.

14. All profiles of Spiral Rib Pipe (¾" × ¾" ribs at 7½" pitch and ¾" × 1" ribs at 11½" pitch in both steel and aluminum and ¾" × 1" ribs at 8½" pitch in steel only) shall be manufactured with rerolled ends. Corrugation profile of the rerolled ends shall be 2⅔" × ½" annual corrugations with a minimum of two full corrugations at each end.

NOTES:

To accompany plans dated 5-10-10

1. All ferrous metal coupling band connection hardware shall be galvanized or electroplated in accordance with the Standard Specifications.
2. For helically corrugated coupling bands, the connection angles may be oriented parallel to the pipe axis, provided connecting holes are slotted lengthwise sufficiently to allow adjustment for the helix angle.
3. Tension strap may be connected to band with either spot welds or fillet welds that develop minimum required strength of strap.
4. Use 1¼" gage line dimension on attached angle leg for rivets and spot welds.
5. Band thickness shall not be less than:
   a. 3 standard thicknesses lighter than the thickness of the pipe for Corrugated Steel Pipe.
   b. 2 standard thicknesses lighter than the thickness of the pipe and in no case lighter than 0.060" for Corrugated Aluminum Pipe.
6. Dimensions, thicknesses and strengths shown are minimum.
7. For pipe arches use same width band as for round pipe of equal periphery.
8. Fillet welds of equivalent strenght may be substituted for spot welds or rivets.
9. Spot welds shall develop minimum required strength of strap.
10. Pipe with rerolled ends having at least two 2⅔" × ½" annular corrugations at each end with or without an upturned flange may be connected with any of the annular coupling bands shown for pipe of the same diameter and wall thickness and having 2⅔" × ½" corrugations.
11. In the case of H-12 huggerbands, two piece bands are required for diameters through 96" and three piece bands are required for diameters 102" through 120".
12. Two piece bands are required for pipes greater than 42" diameter.
13. The 2¼" × 2" × 0.109" thick galvanized die-formed angle connector may be used in lieu of the 2" × 2" × 3/16" angle connector for standard joints only on pipes through 72" diameter.

STATE OF CALIFORNIA
DEPARTMENT OF TRANSPORTATION

CORRUGATED METAL PIPE COUPLING DETAILS No. 5 STANDARD JOINT

NO SCALE

RSP D97E DATED JUNE 6, 2008 SUPERSEDES STANDARD PLAN D97E
DATED MAY 1, 2006 - PAGE 187 OF THE STANDARD PLANS BOOK DATED MAY 2006.

REVISED STANDARD PLAN RSP D97E

2006 REVISED STANDARD PLAN RSP D97E

4-2-08

DIST	COUNTY	ROUTE	POST MILES TOTAL PROJECT	SHEET NO.	TOTAL SHEETS
05	SLO	1	9.5/10.0	30	40

Raymond Don Tsztoo
REGISTERED CIVIL ENGINEER

June 6, 2008
PLANS APPROVAL DATE

REGISTERED PROFESSIONAL ENGINEER Raymond Don Tsztoo No. C37332 Exp. 6-30-08 CIVIL STATE OF CALIFORNIA

The State of California or its officers or agents shall not be responsible for the accuracy or completeness of electronic copies of this plan sheet.

To accompany plans dated 5-10-10

ANNULAR AND HELICAL PROFILE

COUPLING TYPE	PIPE CORRUGATION	PIPE SIZE	W OR A	PIPE WALL THICKNESS CSP	PIPE WALL THICKNESS CAP	BAND THICKNESS CSP	BAND THICKNESS CAP	BAR AND STRAP (CSP ONLY) STRAP THICKNESS	BOLTS Dia	BAR Dia	BAR YIELD STRENGTH	ANGLE DIMENSIONS CSP	ANGLE DIMENSIONS CAP	BOLTS (No. - Dia) CSP	BOLTS (No. - Dia) CAP	RIVETS ANGLE TO BAND CSP	RIVETS ANGLE TO BAND CAP	SPOT WELDS ANGLE TO BAND CSP
TWO PIECE INTEGRAL FLANGE	1½" × ¼"	6"-10"	7"	0.064"-0.079"	0.060"	0.064"	0.060"							2-⅜"	2-⅜"			
	2⅔" × ½"	12"-24"	12"		0.060"-0.105"		0.060"								3-½"			
UNIVERSAL	2⅔" × ½"	THROUGH 36"	12"	0.064"-0.138"	0.060"-0.135"	0.064"	0.060"	0.079"	½"	⅞"	32 ksi	2" × 2" × 3/16"	2" × 2" × 3/16"	3-½"	3-½"	3-⅜"	3-⅜"	5-½"
		42"-60"	16¼"	0.064"-0.168"	0.060"-0.164"	0.064"	0.060"	DOUBLE 0.079"	½"	⅞"	32 ksi	2" × 2" × ¼"	2" × 2" × ¼"	4-½"	4-½"	5-⅜"	5-⅜"	
ANNULAR	2⅔" × ½"	THROUGH 36"	12"	0.064"-0.138"	0.060"-0.135"	0.064"	0.060"					2" × 2" × 3/16"	2" × 2" × 3/16"	3-½"	3-½"	3-⅜"	3-⅜"	5-½"
		42"-60"	12"	0.064"-0.079"		0.064"						2" × 2" × 3/16"		3-½"		3-⅜"		5-½"
		42"-60"	12"	0.109"-0.168"	0.135"-0.164"	0.064"	0.075"					2" × 2" × ¼"	2" × 2" × ¼"	3-½"	3-½"	5-⅜"	5-⅜"	
		66"-72"	24"		0.164"		0.105"						2" × 2" × ¼"		5-½"		5-½"	
		66"-84"	24"	0.109"-0.168"		0.064"						2" × 2" × ¼"		5-½"		7-⅜"		
		42"-54"	12"		0.060"-0.105"		0.060"						2" × 2" × 3/16"		3-½"		3-⅜"	
	3" × 1"	48"-60"	14"	0.064"-0.079"		0.064"						2" × 2" × 3/16"		3-½"		3-⅜"		5-½"
		48"-60"	14"	0.109"		0.064"						2" × 2" × 3/16"		3-½"		5-⅜"		
		66"-120"	25"	0.064"-0.109"		0.064"						2" × 2" × 3/16"		5-½"		9-⅜"		
		42"-60"	14"		0.060"-0.105"		0.060"						2" × 2" × 3/16"		3-½"		5-⅜"	
		42"-60"	14"		0.135"		0.075"						2" × 2" × ¼"		3-½"		5-⅜"	
		66"-96"	25"		0.060"-0.135"		0.060"						2" × 2" × ¼"		5-½"		7-⅜"	
		96"-108"	25"		0.135"		0.075"						2" × 2" × ¼"		5-½"		7-⅜"	
HELICAL	2⅔" × ½"	THROUGH 36"	12"	0.064"-0.138"	0.060"-0.135"	0.064"	0.060"					2" × 2" × 3/16"	2" × 2" × 3/16"	3-½"	3-½"	3-⅜"	3-⅜"	5-½"
		42"-54"	12"		0.060"-0.105"		0.060"						2" × 2" × 3/16"		3-½"		3-⅜"	
		42"-60"	12"	0.064"-0.079"		0.064"						2" × 2" × 3/16"		3-½"		3-⅜"		5-½"
		42"-60"	12"	0.109"-0.168"	0.135"-0.164"	0.064"	0.075"					2" × 2" × ¼"	2" × 2" × ¼"	3-½"	3-½"	5-⅜"	5-⅜"	
		66'-84"	24"	0.109"-0.168"		0.064"						2" × 2" × ¼"		5-½"		7-⅜"		
		66"-72"	24"		0.164"		0.105"						2" × 2" × ¼"		5-½"		5-⅜"	
	3" × 1"	48"-60"	14"	0.064"-0.079"		0.064"						2" × 2" × 3/16"		3-½"		3-⅜"		5-½"
		48"-60"	14"	0.109"		0.064"						2" × 2" × 3/16"		3-½"		5-⅜"		
		66"-120"	25"	0.064"-0.109"		0.064"						2" × 2" × 3/16"		5-½"		9-⅜"		
		42"-60"	14"		0.060"-0.105"		0.060"						2" × 2" × 3/16"		3-½"		5-⅜"	
		42"-60"	14"		0.135"		0.075"						2" × 2" × ¼"		3-½"		5-⅜"	
		66"-96"	25"		0.060"-0.135"		0.060"						2" × 2" × ¼"		5-½"		7-⅜"	
		96"-108"	25"		0.135"		0.075"						2" × 2" × ¼"		5-½"		7-⅜"	
HUGGER	2⅔" × ½" REROLLED END	THROUGH 48"	10½"	0.109"		0.064"		0.079"	½"	⅞"	32 ksi							
		54"- 66"	10½"	0.109"		0.064"		DOUBLE 0.079"	½"	⅞"	32 ksi							
		THROUGH 54"	10½"	0.064"-0.079"		0.064"		0.079"	½"	⅞"	32 ksi							
		THROUGH 60"	10½"	0.138"		0.079"		DOUBLE 0.079"	½"	⅞"	32 ksi							
		66"-72"	10½"	0.138"		0.109"		DOUBLE 0.079"	½"	⅞"	32 ksi							
		THROUGH 72"	10½"	0.168"		0.109"		DOUBLE 0.109"	½"	⅞"	45 ksi							
	3" × 1" REROLLED END	48"-84"	10½"	0.109"		0.079"		DOUBLE 0.079"	½"	⅞"	32 ksi							
		48"-90"	10½"	0.064"-0.079"		0.064"		DOUBLE 0.079"	½"	⅞"	32 ksi							
		96"-102"	10½"	0.079"		0.079"		DOUBLE 0.079"	½"	⅞"	32 ksi							
		90"-120"	10½"	0.109"		0.109"		DOUBLE 0.109"	½"	⅞"	45 ksi							

SPIRAL RIB PROFILE

COUPLING TYPE	PIPE CORRUGATION	PIPE SIZE	W	PIPE WALL THICKNESS SSRP	PIPE WALL THICKNESS ASRP	BAND THICKNESS SSRP	BAND THICKNESS ASRP	BAR AND STRAP (SSRP ONLY) STRAP THICKNESS	BOLTS Dia	BAR Dia	BAR YIELD STRENGTH	ANGLE DIMENSIONS SSRP	ANGLE DIMENSIONS ASRP	BOLTS (No.- Dia) SSRP	BOLTS (No.- Dia) ASRP	RIVETS ANGLE TO BAND SSRP	RIVETS ANGLE TO BAND ASRP	SPOT WELDS ANGLE TO BAND SSRP
ANNULAR	2⅔" × ½" * REROLLED END	24"-36"	12"	0.064"-0.109"	0.060"-0.105"	0.064"	0.060"	0.079"	½"	⅞"	32 ksi	2" × 2" × 3/16"	2" × 2" × 3/16"	3-½"	3-½"	3-⅜"	3-⅜"	5-½"
		42"-60"	12"	0.064"-0.079"	0.075"-0.105"	0.064"	0.075"	0.079"	½"	⅞"	32 ksi	2" × 2" × 3/16"	2" × 2" × 3/16"	3-½"	3-½"	3-⅜"	3-⅜"	5-½"
		42"-60"	12"	0.109"		0.064"		0.079"	½"	⅞"	32 ksi	2" × 2" × ¼"		3-½"		5-⅜"		
		66"-84"	24"	0.109"		0.064"		0.079"	½"	⅞"	32 ksi	2" × 2" × ¼"		5-½"		7-⅜"		
HUGGER	2⅔" × ½" * REROLLED END	24"-54"	10½"	0.064"-0.079"		0.064"		0.079"	½"	⅞"	32 ksi							
		24"-48"	10½"	0.109"		0.064"		0.079"	½"	⅞"	32 ksi							
		54"-66"	10½"	0.109"		0.064"		Double 0.079"	½"	⅞"	32 ksi							

* See Note 13.

NOTES:

1. All ferrous metal coupling band connection hardware shall be galvanized or electroplated in accordance with the Standard Specifications.
2. For helically corrugated coupling bands, the connection angles may be oriented parallel to the pipe axis, provided connecting holes are slotted lengthwise sufficiently to allow adjustment for the helix angle.
3. Tension strap may be connected to band with either spot welds or fillet welds that develop minimum required strength of strap.
4. Use 1¼" gage line dimension on attached angle leg for rivets and spot welds.
5. Band thickness shall not be less than:
   a. 3 standard thicknesses lighter than the thickness of the pipe for Corrugated Steel Pipe.
   b. 2 standard thicknesses lighter than the thickness of the pipe and in no case lighter than 0.060" for Corrugated Aluminum Pipe.
6. Dimensions, thicknesses and strengths shown are minimum.
7. For pipe arches use same width band as for round pipe of equal periphery.
8. Fillet welds of equivalent strength may be substituted for spot welds or rivets.
9. Spot welds shall develop minimum required strength of strap.
10. Pipe with rerolled ends having at least two 2⅔" × ½" annular corrugations at each end with or without an upturned flange may be connected with any of the annular coupling bands shown for pipe of the same diameter and wall thickness and having 2⅔" × ½" corrugations.
11. In the case of H-12 huggerbands, two piece bands are required for diameters through 96" and three piece bands are required for diameters 102" through 120".
12. Two piece bands are required for pipes greater than 42" diameter.
13. All profiles of Spiral Rib Pipe (¾" × ¾" ribs at 7½" pitch and ¾" × 1" ribs at 11½" pitch in both steel and aluminum and ¾" × 1" ribs at 8½" pitch in steel only) shall be manufactured with rerolled ends. Corrugation profile of the rerolled ends shall be 2⅔" × ½" annual corrugations with a minimum of two full corrugations at each end.

STATE OF CALIFORNIA
DEPARTMENT OF TRANSPORTATION

CORRUGATED METAL PIPE COUPLING DETAILS No. 6 POSITIVE JOINT

NO SCALE

RSP D97F DATED JUNE 6, 2008 SUPERSEDES STANDARD PLAN D97F
DATED MAY 1, 2006 - PAGE 188 OF THE STANDARD PLANS BOOK DATED MAY 2006.

REVISED STANDARD PLAN RSP D97F

2006 REVISED STANDARD PLAN RSP D97F

4-2-08

DIST	COUNTY	ROUTE	POST MILES TOTAL PROJECT	SHEET NO.	TOTAL SHEETS
05	SLO	1	9.5/10.0	31	40

Raymond Don Tsztoo
REGISTERED CIVIL ENGINEER

June 6, 2008
PLANS APPROVAL DATE

REGISTERED PROFESSIONAL ENGINEER
Raymond Don Tsztoo
No. C37332
Exp. 6-30-08
CIVIL
STATE OF CALIFORNIA

The State of California or its officers or agents shall not be responsible for the accuracy or completeness of electronic copies of this plan sheet.

To accompany plans dated 5-10-10

ANNULAR AND HELICAL PROFILE

COUPLING TYPE	PIPE CORRUGATION	PIPE SIZE	W OR A	PIPE WALL THICKNESS		BAND THICKNESS		BAR AND STRAP (CSP ONLY)			ANGLE						
											DIMENSIONS		BOLTS (No.- Dia)		RIVETS ANGLE TO BAND		SPOT WELDS ANGLE TO BAND
				CSP	CAP	CSP	CAP	STRAP THICKNESS	BOLTS Dia	BAR Dia	CSP	CAP	CSP	CAP	CSP	CAP	CSP
TWO PIECE INTEGRAL FLANGE	1½′ × ¼"	6"	7"	0.064"-0.168"		0.052"							3-⅜"				
	1½′ × ¼"	8"-10"	7"	0.064"-0.168"	0.060"-0.164"	0.064"	0.060"						3-⅜"	3-⅜"			
ANNULAR	2⅔" × ½"	THROUGH 24"	12"	0.064"-0.168"	0.060"-0.164"	0.064"	0.060"				2" × 2" × 3/16"	2" × 2" × 3/16"	3-½"	3-½"	3-⅜"	3-⅜"	3-½"
HUGGER	2⅔" × ½" REROLLED END	THROUGH 24"	10½"	0.064"-0.168"		0.064"		0.079"	½"	⅞"							

SPIRAL RIB PROFILE

COUPLING TYPE	PIPE CORRUGATION	PIPE SIZE	W	PIPE WALL THICKNESS		BAND THICKNESS		BAR AND STRAP (SSRP ONLY)			ANGLE						
											DIMENSIONS		BOLTS (No.- Dia)		RIVETS ANGLE TO BAND		SPOT WELDS ANGLE TO BAND
				SSRP	ASRP	SSRP	ASRP	STRAP THICKNESS	BOLTS Dia	BAR Dia	SSRP	ASRP	SSRP	ASRP	SSRP	ASRP	SSRP
ANNULAR	2⅔" × ½" * REROLLED END	24"	12"	0.064"-0.168"	0.060"-0.164"	0.064"	0.060"				2" × 2" × 3/16"	2" × 2" × 3/16"	3-½"	3-½"	3-⅜"	3-⅜"	3-½"
HUGGER	2⅔" × ½" * REROLLED END	24"	10½"	0.064"-0.168"		0.064"		0.079"	½"	⅞"							

* See Note 12.

NOTES:

1. All ferrous metal coupling band connection hardware shall be galvanized or electro-plated in accordance with the Standard Specifications.
2. For helically corrugated coupling bands, the connection angles may be oriented parallel to the pipe axis, provided connecting holes are slotted lengthwise sufficiently to allow adjustment for the helix angle.
3. Tension strap may be connected to band with either spot welds or fillet welds that develop minimum required strength of strap.
4. Use 1¼" gage line dimension on attached angle leg for rivets and spot welds.
5. Band thickness shall not be less than:
   a. 3 standard thicknesses lighter than the thickness of the pipe for Corrugated Steel Pipe.
   b. 2 standard thicknesses lighter than the thickness of the pipe and in no case lighter than 0.060" for Corrugated Aluminum Pipe.
6. Dimensions, thicknesses and strengths shown are minimum.
7. For pipe arches use same width band as for round pipe of equal periphery.
8. Fillet welds of equivalent strenght may be substituted for spot welds or rivets.
9. Spot welds shall develop minimum required strength of strap.
10. Pipe with rerolled ends having at least two 2⅔" × ½" annular corrugations at each end with or without an upturned flange may be connected with any of the annular coupling bands shown for pipe of the same diameter and wall thickness and having 2⅔" × ½" corrugations.
11. For downdrain applications, two piece integral flange couplers shall have factory applied sleeve type rubber gaskets with a minimum length of 7" measured along the length of the pipe.
12. All profiles of Spiral Rib Pipe (¾" × ¾" ribs at 7½" pitch and ¾" × 1" ribs at 11½" pitch in both steel and aluminum and ¾" × 1" ribs at 8½" pitch in steel only) shall be manufactured with rerolled ends. Corrugation profile of the rerolled ends shall be 2⅔" × ½" annual corrugations with a minimum of two full corrugations at each end.

STATE OF CALIFORNIA
DEPARTMENT OF TRANSPORTATION

CORRUGATED METAL PIPE COUPLING DETAILS No. 7 DOWNDRAIN

NO SCALE

RSP D97G DATED JUNE 6, 2008 SUPERSEDES STANDARD PLAN D97G
DATED MAY 1, 2006 - PAGE 189 OF THE STANDARD PLANS BOOK DATED MAY 2006.

REVISED STANDARD PLAN RSP D97G

2006 REVISED STANDARD PLAN RSP D97G

4-4-08

DIST	COUNTY	ROUTE	POST MILES TOTAL PROJECT	SHEET NO.	TOTAL SHEETS
05	SLO	1	9.5/10.0	32	40

LICENSED LANDSCAPE ARCHITECT

April 3, 2009
PLANS APPROVAL DATE

The State of California or its officers or agents shall not be responsible for the accuracy or completeness of electronic copies of this plan sheet.

LICENSED LANDSCAPE ARCHITECT
Gregory A. Balzer 2878
Registered Professional
02-28-11
Renewal Date
03-04-09
Date
STATE OF CALIFORNIA

To accompany plans dated 5-10-10

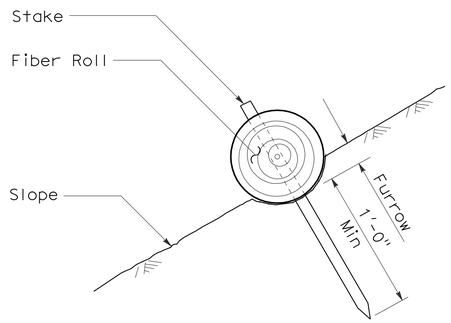

SECTION

FIBER ROLL
(TYPE 1)

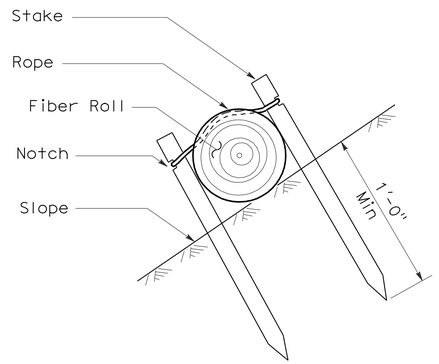

SECTION

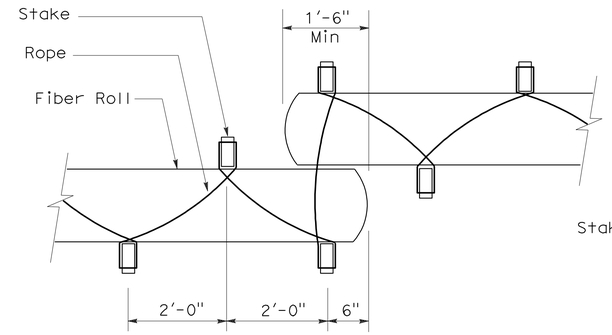

PLAN

FIBER ROLL
(TYPE 2)

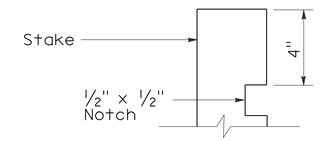

ELEVATION

STAKE NOTCH DETAIL

NOTES:

1. Fiber roll spacing varies depending upon slope inclination.
2. Installations shown in the perspectives are for slope inclination of 10:1 and steeper.

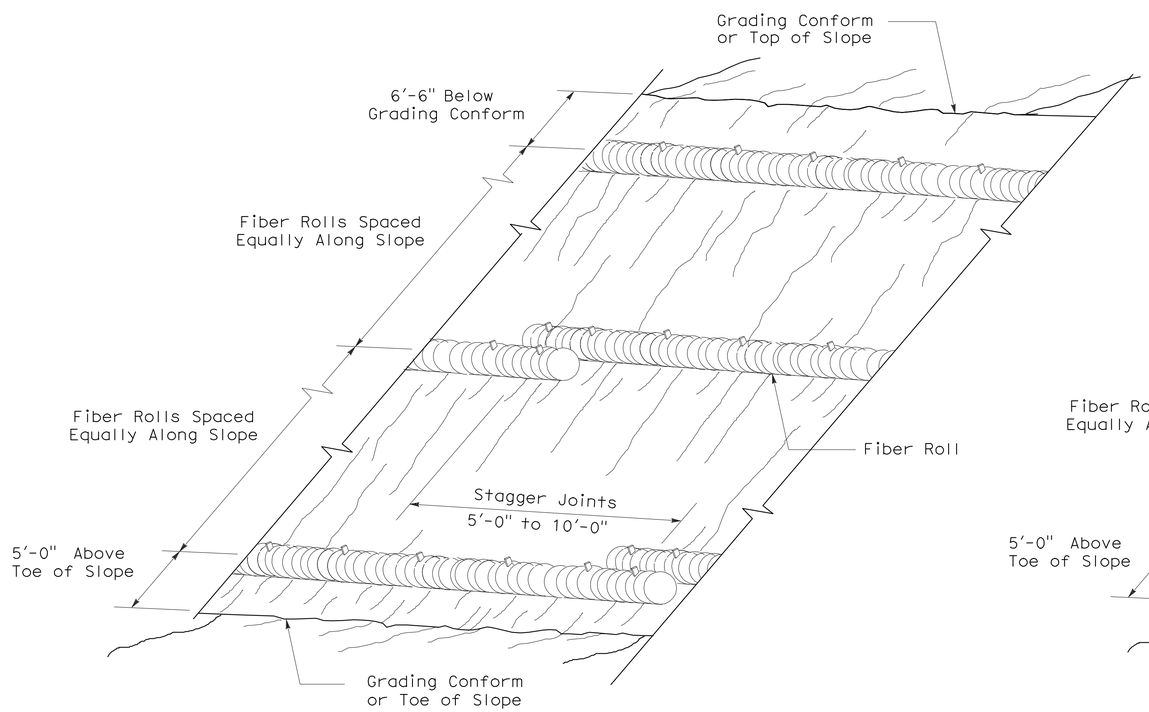

PERSPECTIVE

FIBER ROLL (TYPE 1)

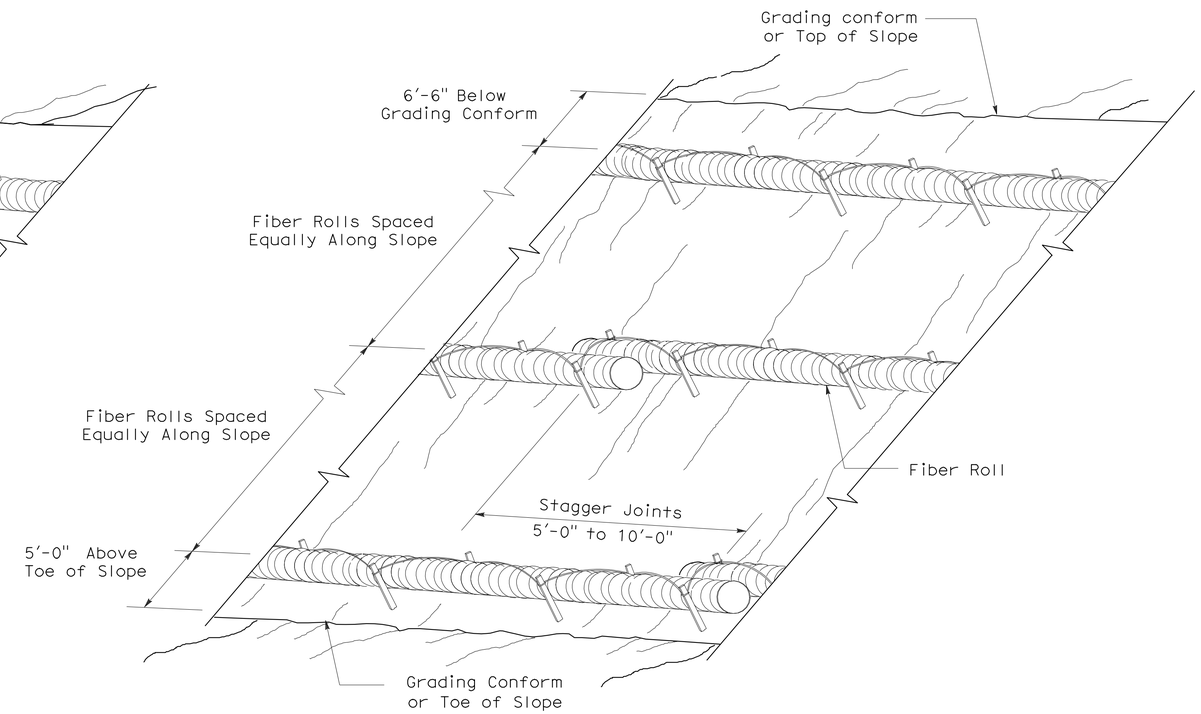

PERSPECTIVE

FIBER ROLL (TYPE 2)

STATE OF CALIFORNIA
DEPARTMENT OF TRANSPORTATION

EROSION CONTROL DETAILS (FIBER ROLL)

NO SCALE

RNSP H51 DATED APRIL 3, 2009 SUPERSEDES NSP H51 DATED DECEMBER 1, 2006 THAT SUPPLEMENTS THE STANDARD PLANS BOOK DATED MAY 2006.

REVISED NEW STANDARD PLAN RNSP H51

2006 REVISED NEW STANDARD PLAN RNSP H51

3-4-09

DIST	COUNTY	ROUTE	POST MILES TOTAL PROJECT	SHEET NO.	TOTAL SHEETS
05	SLO	1	9.5/10.0	33	40

Randell D. Hiatt
REGISTERED CIVIL ENGINEER

June 6, 2008
PLANS APPROVAL DATE

REGISTERED PROFESSIONAL ENGINEER
Randell D. Hiatt
No. C50200
Exp. 6-30-09
CIVIL
STATE OF CALIFORNIA

The State of California or its officers or agents shall not be responsible for the accuracy or completeness of electronic copies of this plan sheet.

To accompany plans dated 5-10-10

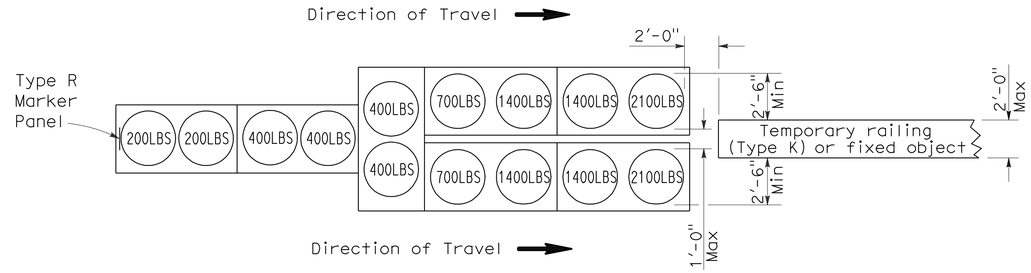

ARRAY 'TU14'

Approach speed 45 mph or more

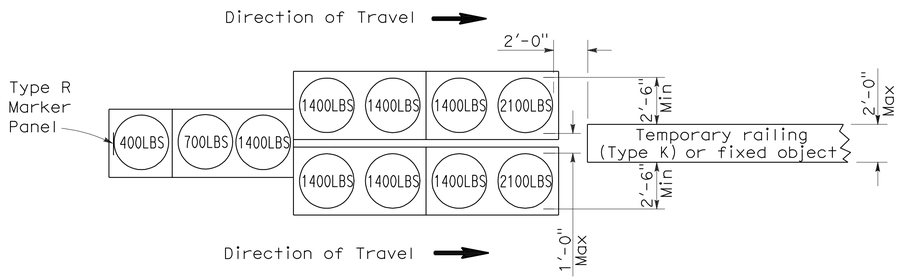

ARRAY 'TU11'

Approach speed less than 45 mph

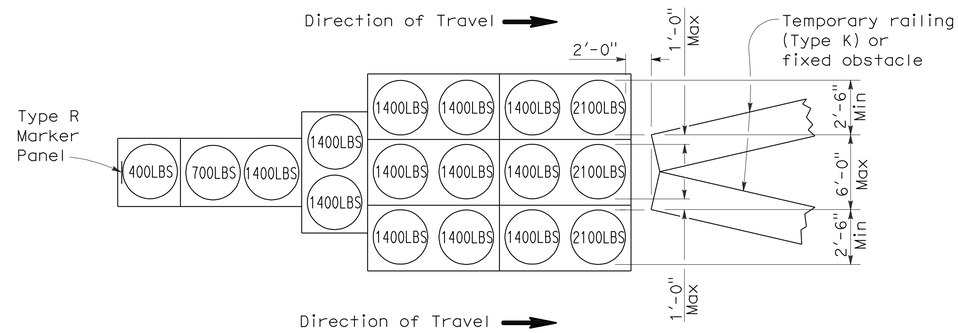

ARRAY 'TU17'

Approach speed less than 45 mph

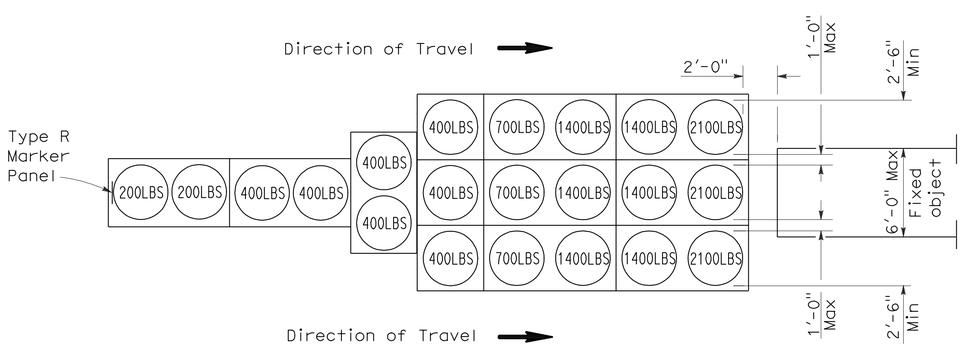

ARRAY 'TU21'

Approach speed 45 mph or more

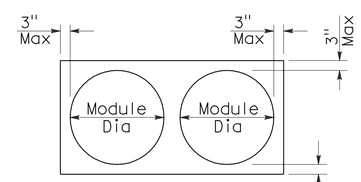

PLAN

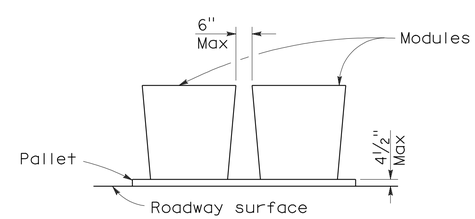

ELEVATION

CRASH CUSHION PALLET DETAIL

See Note 7

NOTES:

1. (XXX) Indicates sand filled module location and weight of sand in pounds for each module. Module spacing is based on the greater diameter of the module.
2. All sand weights are nominal.
3. Temporary crash cushion arrays shall not encroach on the traveled way.
4. Place the top of Type R marker panel 1" below the module lid.
5. Refer to Standard Plan A73B for marker details.
6. Approach speeds indicated conform to NCHRP 350 Report criteria.
7. Use of pallets is optional.

STATE OF CALIFORNIA
DEPARTMENT OF TRANSPORTATION

TEMPORARY CRASH CUSHION, SAND FILLED (UNIDIRECTIONAL)

NO SCALE

RSP T1A DATED JUNE 6, 2008 SUPERSEDES STANDARD PLAN T1A
DATED MAY 1, 2006 - PAGE 211 OF THE STANDARD PLANS BOOK DATED MAY 2006.

REVISED STANDARD PLAN RSP T1A

2006 REVISED STANDARD PLAN RSP T1A

DIST	COUNTY	ROUTE	POST MILES TOTAL PROJECT	SHEET NO.	TOTAL SHEETS
05	SLO	1	9.5/10.0	34	40

Randell D. Hiatt
REGISTERED CIVIL ENGINEER

June 6, 2008
PLANS APPROVAL DATE

REGISTERED PROFESSIONAL ENGINEER
Randell D. Hiatt
No. C50200
Exp. 6-30-09
CIVIL
STATE OF CALIFORNIA

The State of California or its officers or agents shall not be responsible for the accuracy or completeness of electronic copies of this plan sheet.

To accompany plans dated 5-10-10

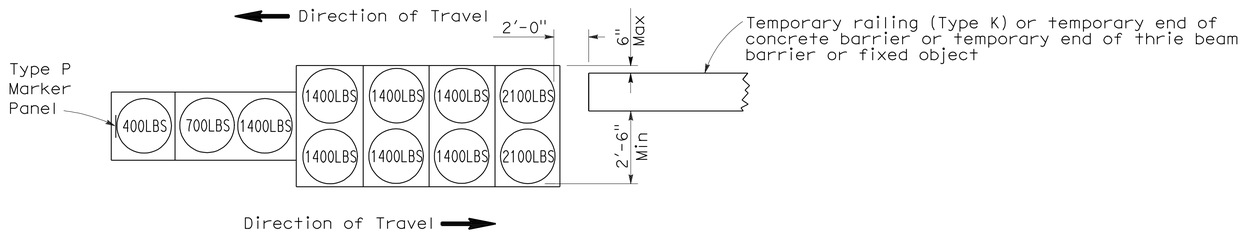

ARRAY 'TB11'

Approach speed less than 45 mph

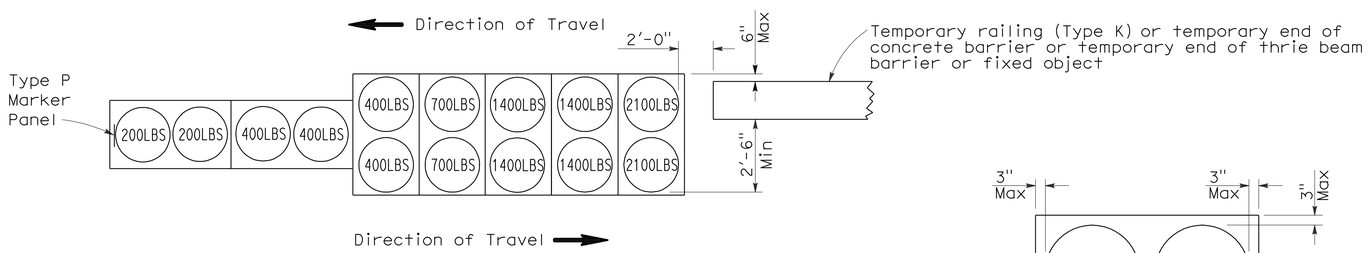

ARRAY 'TB14'

Approach speed 45 mph or more

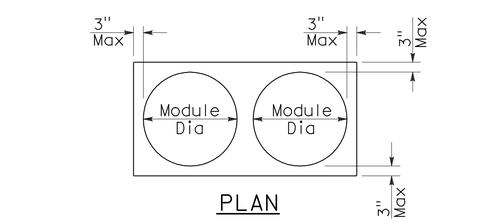

PLAN

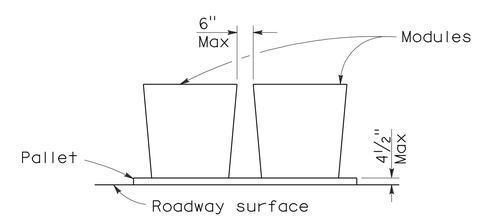

ELEVATION

CRASH CUSHION PALLET DETAIL

See Note 7

NOTES:

1. (XXX) Indicates sand filled module location and weight of sand in pounds for each module. Module spacing is based on the greater diameter of the module.
2. All sand weights are nominal.
3. Temporary crash cushion arrays shall not encroach on the traveled way.
4. Place the Type P marker panel so that the bottom of the panel rests upon the pallet.
5. Refer to Standard Plan A73B for marker details.
6. Approach speeds indicated conform to NCHRP 350 Report criteria.
7. Use of pallets is optional.

STATE OF CALIFORNIA
DEPARTMENT OF TRANSPORTATION

TEMPORARY CRASH CUSHION, SAND FILLED (BIDIRECTIONAL)

NO SCALE

RSP T1B DATED JUNE 6, 2008 SUPERSEDES STANDARD PLAN T1B
DATED MAY 1, 2006 - PAGE 212 OF THE STANDARD PLANS BOOK DATED MAY 2006.

REVISED STANDARD PLAN RSP T1B

2006 REVISED STANDARD PLAN RSP T1B

DIST	COUNTY	ROUTE	POST MILES TOTAL PROJECT	SHEET NO.	TOTAL SHEETS
05	SLO	1	9.5/10.0	35	40

Randell D. Hiatt
REGISTERED CIVIL ENGINEER

June 6, 2008
PLANS APPROVAL DATE

REGISTERED PROFESSIONAL ENGINEER
Randell D. Hiatt
No. C50200
Exp. 6-30-09
CIVIL
STATE OF CALIFORNIA

The State of California or its officers or agents shall not be responsible for the accuracy or completeness of electronic copies of this plan sheet.

To accompany plans dated 5-10-10

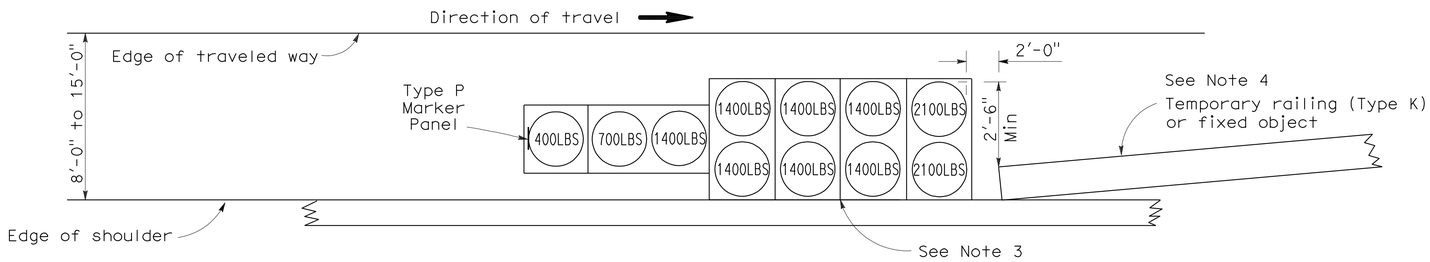

ARRAY 'TS11'

Approach speed less than 45 mph
See Note 9

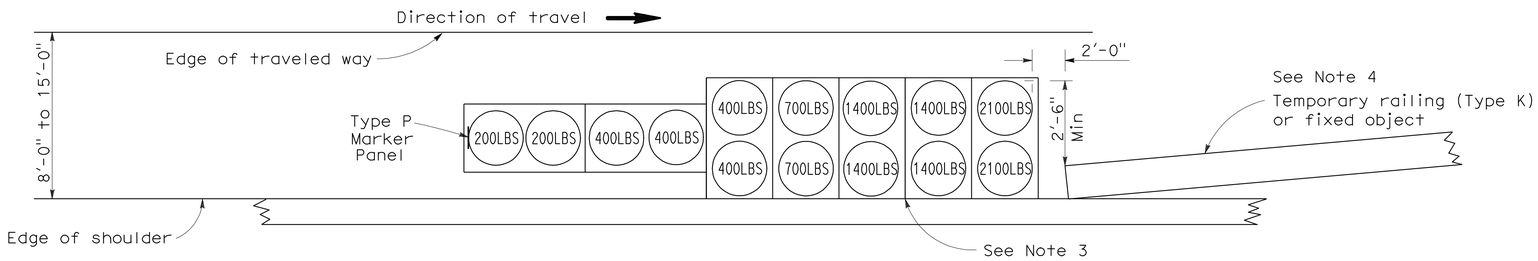

ARRAY 'TS14'

Approach speed 45 mph or more
See Note 9

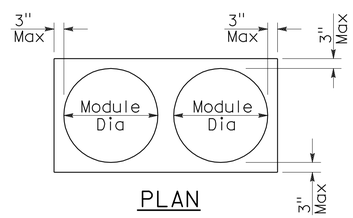

PLAN

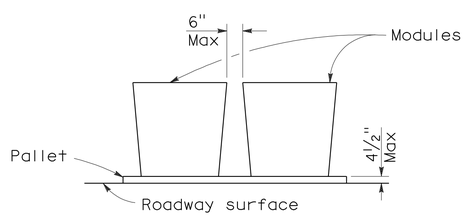

ELEVATION

CRASH CUSHION PALLET DETAIL

See Note 11

NOTES:

1. (XXX) Indicates sand filled module location and weight of sand in pounds for each module. Module spacing is based on the greater diameter of the module.
2. All sand weights are nominal.
3. The temporary crash cushion arrays shown on this plan shall be used only in locations where there will be traffic on one side of the temporary crash cushion array.
4. If the fixed object or approach end of the temporary railing is less than 15'-0" from the edge of traveled way, a temporary crash cushion is required in a construction or work zone.
5. Temporary crash cushion arrays shall not encroach on the traveled way.
6. Arrays for median shoulders shall conform to details shown on this plan for outside shoulders.
7. Place the Type P marker panel so that the bottom of the panel rests upon the pallet and faces traffic.
8. Refer to Standard Plan A73B for marker details.
9. For shoulder widths less than 8'-0", appropriate approved crash cushion protection, other than sand filled modules, shall be provided at fixed objects and at approach ends of temporary railing. The specific type of crash cushion shall be as shown on the project plans or as specified in the Special Provisions, or if not shown on the project plans or specified in the Special Provisions, shall be as approved by the Engineer.
10. Approach speeds indicated conform to NCHRP 350 Report criteria.
11. Use of pallets is optional.

STATE OF CALIFORNIA
DEPARTMENT OF TRANSPORTATION

TEMPORARY CRASH CUSHION, SAND FILLED (SHOULDER INSTALLATIONS)

NO SCALE

RSP T2 DATED JUNE 6, 2008 SUPERSEDES STANDARD PLAN T2
DATED MAY 1, 2006 - PAGE 213 OF THE STANDARD PLANS BOOK DATED MAY 2006.

REVISED STANDARD PLAN RSP T2

2006 REVISED STANDARD PLAN RSP T2

5-15-08

DIST	COUNTY	ROUTE	POST MILES TOTAL PROJECT	SHEET NO.	TOTAL SHEETS
05	SLO	1	9.5/10.0	36	40

LICENSED LANDSCAPE ARCHITECT

August 15, 2008
PLANS Approval DATE

LICENSED LANDSCAPE ARCHITECT ROBERT B. SCHOTT 3625 Signature 11-04-08 Renewal Date 08-11-08 Date STATE OF CALIFORNIA

The State of California or its officers or agents shall not be responsible for the accuracy or completeness of electronic copies of this plan sheet.

To accompany plans dated 5-10-10

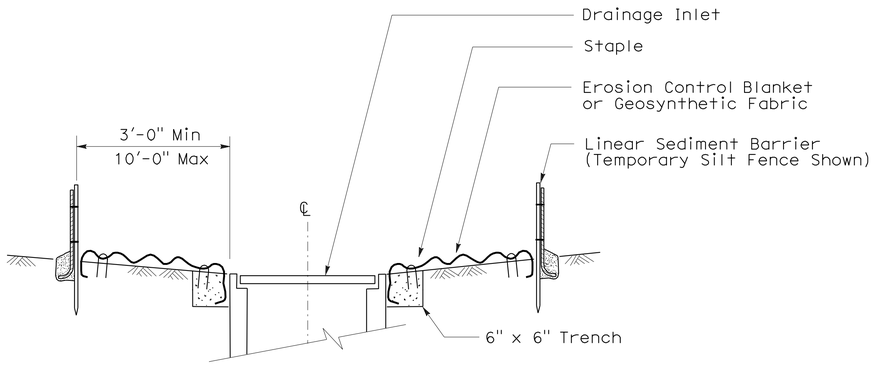

SECTION A-A

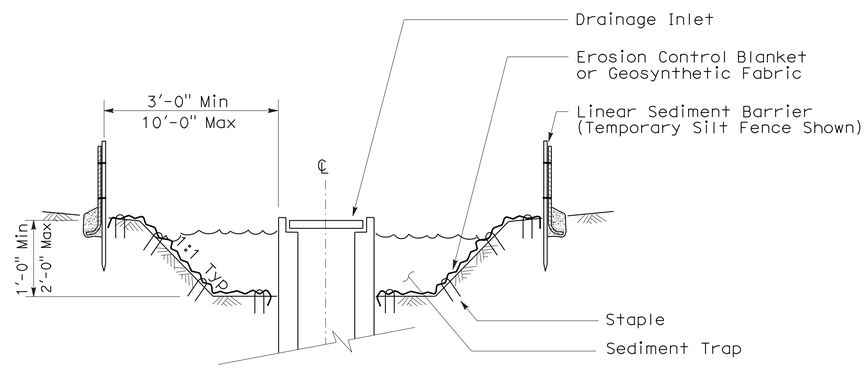

SECTION B-B

NOTES:

1. See Standard Plan T51 for Temporary Silt Fence.
2. Dimensions may vary to fit field conditions.

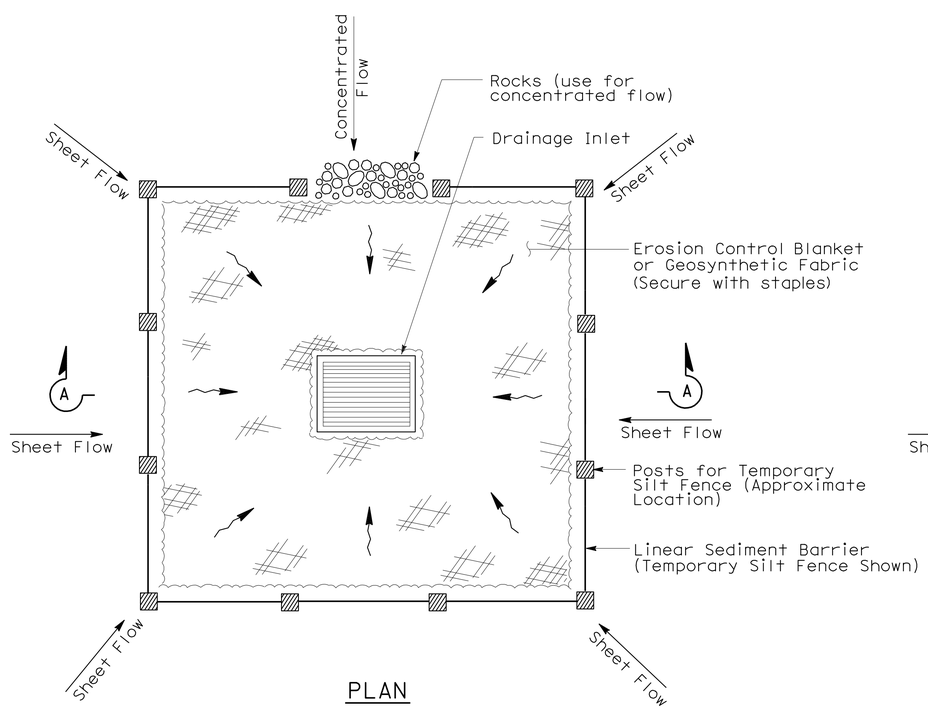

PLAN

TEMPORARY DRAINAGE INLET PROTECTION (TYPE 1)

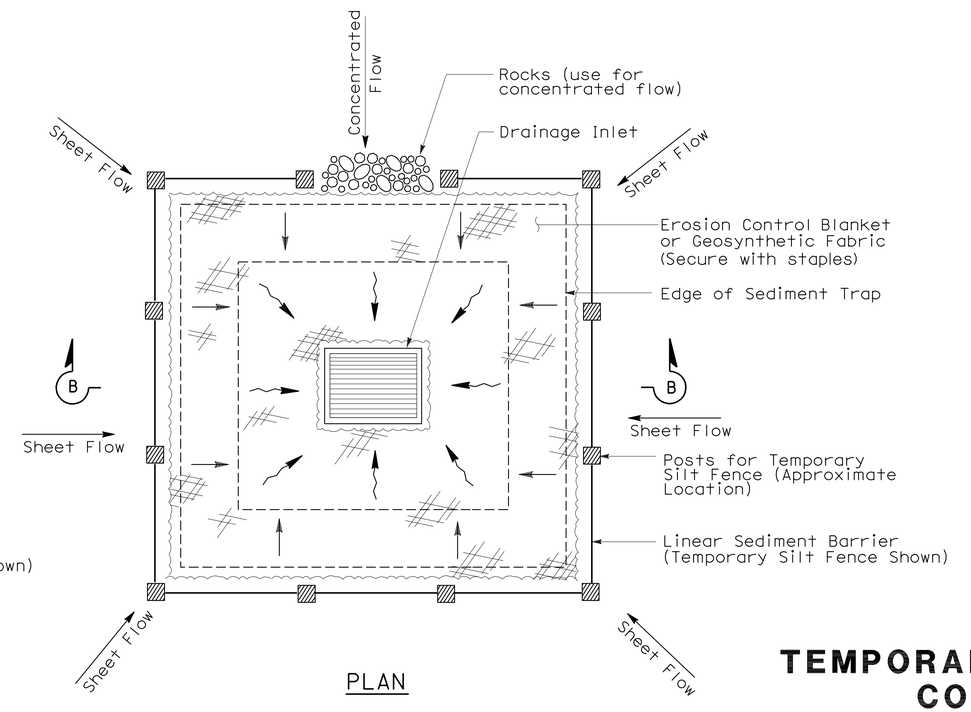

PLAN

TEMPORARY DRAINAGE INLET PROTECTION (TYPE 2) (EXCAVATED SEDIMENT TRAP)

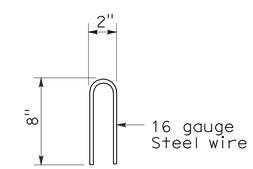

STAPLE DETAIL

STATE OF CALIFORNIA
DEPARTMENT OF TRANSPORTATION

TEMPORARY WATER POLLUTION CONTROL DETAILS (TEMPORARY DRAINAGE INLET PROTECTION)

NO SCALE

NSP T61 DATED AUGUST 15, 2008 SUPPLEMENTS THE STANDARD PLANS BOOK DATED MAY 2006.

NEW STANDARD PLAN NSP T61

2006 NEW STANDARD PLAN NSP T61

7-11-08

DIST	COUNTY	ROUTE	POST MILES TOTAL PROJECT	SHEET NO.	TOTAL SHEETS
05	SLO	1	9.5/10.0	37	40

LICENSED LANDSCAPE ARCHITECT

August 15, 2008
PLANS APPROVAL DATE

The State of California or its officers or agents shall not be responsible for the accuracy or completeness of electronic copies of this plan sheet.

LICENSED LANDSCAPE ARCHITECT — Robert B. Schott — Signature — 11-04-08 Renewal Date — 08-11-08 Date — STATE OF CALIFORNIA

To accompany plans dated 5-10-10

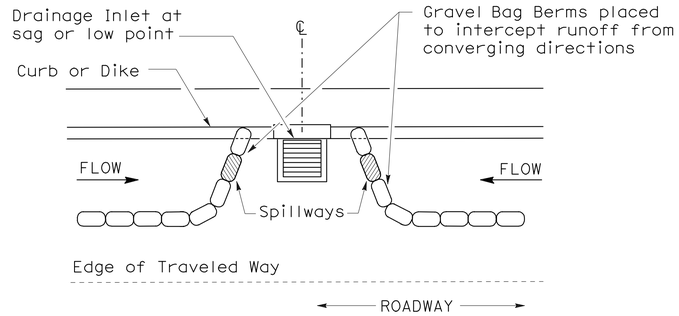

PLAN

CONFIGURATION FOR SAG POINT INLET (GRAVEL BAG BERM)

GRAVEL BAG BERM (TYPE 3A) SPACING TABLE

SLOPE OF ROADWAY (PERCENT)	1 to 3.9	4 to 5.9	6 to 7.9	8 to 10	10+
INTERVAL BETWEEN BERM	100′	75′	50′	25′	12′

For slope of less than 1%, install barriers only if erosion/sediment is prevalent

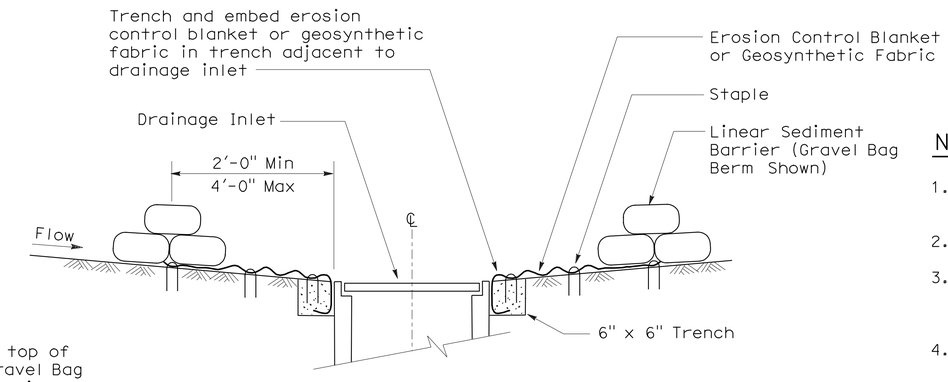

SECTION A-A

NOTES:

1. Place safety cones adjacent to drainage inlet protection.
2. Dimensions may vary to fit field conditions.
3. Install a minimum of 3 gravel bag berms upstream of each drainage inlet to be protected.
4. Position erosion control blanket or geosynthetic fabric at edge of concrete apron and secure in trench.
5. Erosion control blanket or geosynthetic fabric is not required if the area adjacent to the drainage inlet is vegetated or paved.

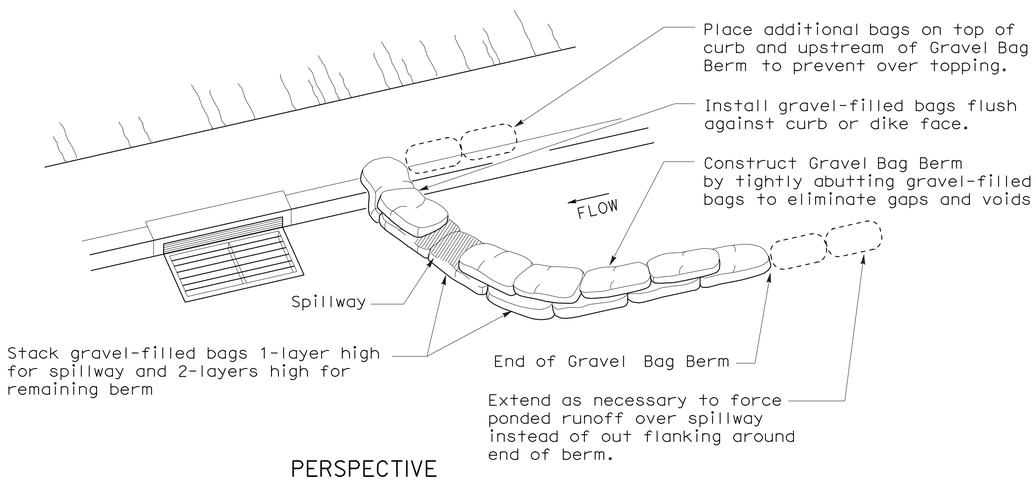

PERSPECTIVE

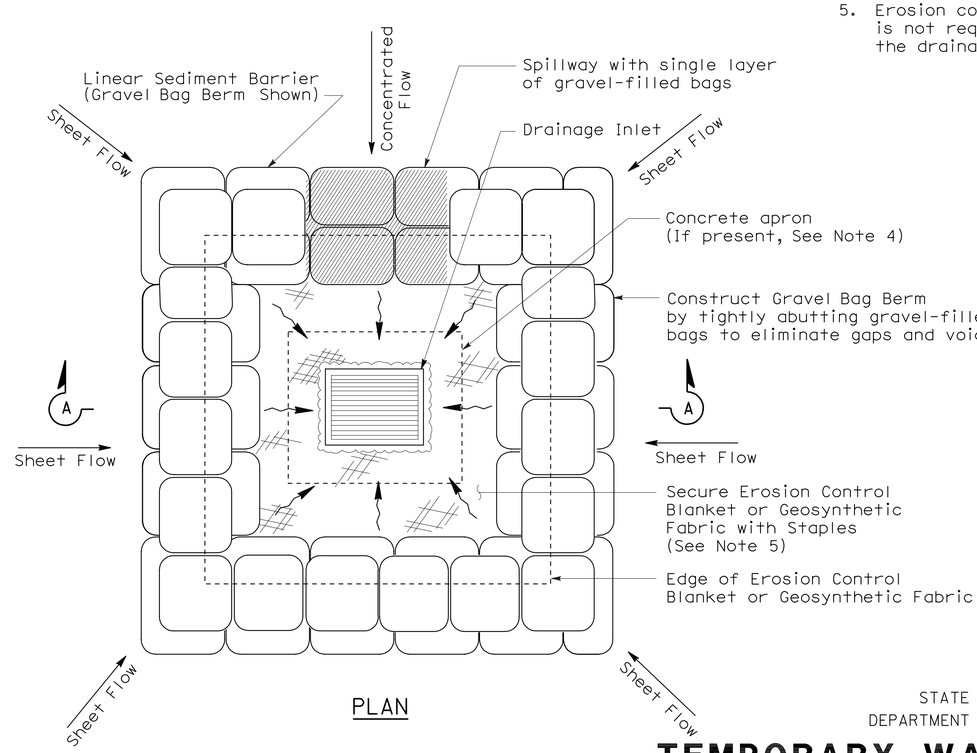

PLAN

TEMPORARY DRAINAGE INLET PROTECTION (TYPE 3B)

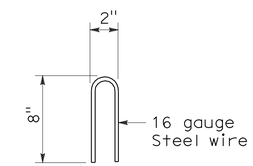

STAPLE DETAIL

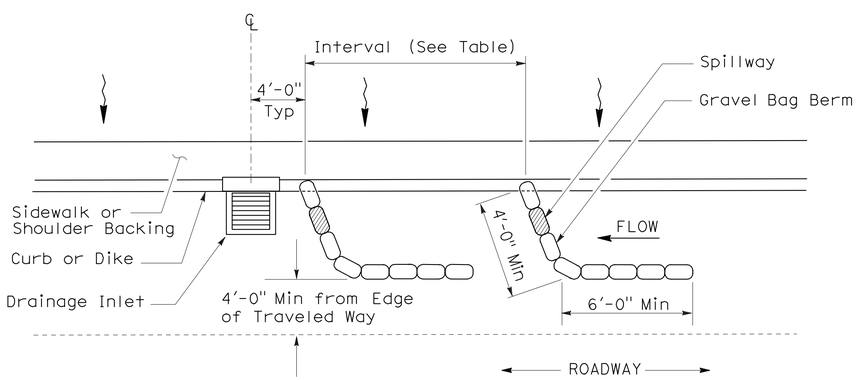

PLAN

TEMPORARY DRAINAGE INLET PROTECTION (TYPE 3A) (GRAVEL BAG BERM)

STATE OF CALIFORNIA
DEPARTMENT OF TRANSPORTATION

TEMPORARY WATER POLLUTION CONTROL DETAILS (TEMPORARY DRAINAGE INLET PROTECTION)

NO SCALE

NSP T62 DATED AUGUST 15, 2008 SUPPLEMENTS THE STANDARD PLANS BOOK DATED MAY 2006.

NEW STANDARD PLAN NSP T62

2006 NEW STANDARD PLAN NSP T62

7-11-08

DIST	COUNTY	ROUTE	POST MILES TOTAL PROJECT	SHEET NO.	TOTAL SHEETS
05	SLO	1	9.5/10.0	38	40

Robert B Schott
LICENSED LANDSCAPE ARCHITECT

August 15, 2008
PLANS APPROVAL DATE

LICENSED LANDSCAPE ARCHITECT Robert B. Schott 3895 Signature 11-04-08 Renewal Date 08-11-08 Date STATE OF CALIFORNIA

The State of California or its officers or agents shall not be responsible for the accuracy or completeness of electronic copies of this plan sheet.

To accompany plans dated 5-10-10

FLEXIBLE SEDIMENT BARRIER SPACING TABLE

SLOPE OF ROADWAY (PERCENT)	0 to 0.9	1 to 1.9	2 to 2.9	3 to 4	5+
INTERVAL BETWEEN BARRIERS	50′	35′	30′	25′	20′
ANGLE FROM FACE OF CURB	70°	70°	70°	45°	45°
SUGGESTED BARRIER LENGTH	6′	6′	6′	6′	6′

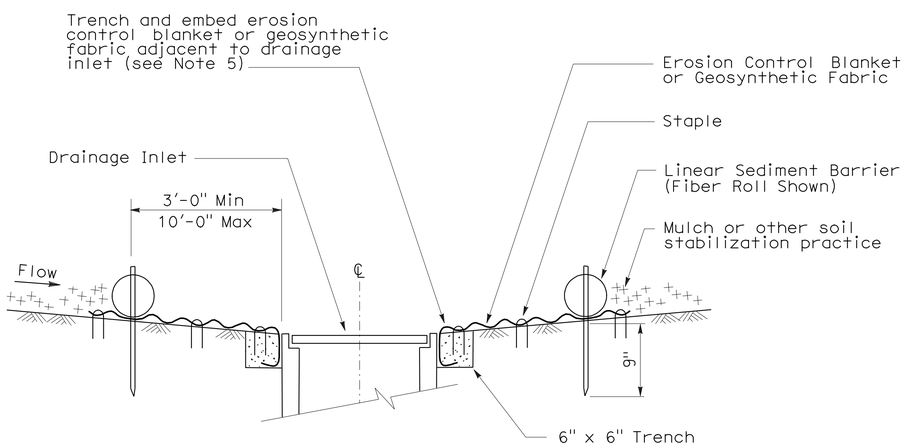

SECTION A-A

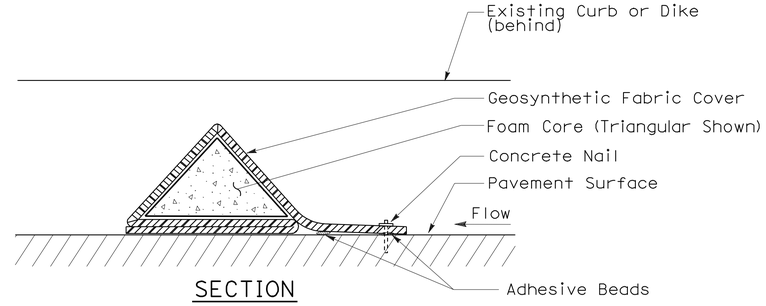

SECTION

FLEXIBLE SEDIMENT BARRIER DETAIL (FOAM BARRIER SHOWN)

NOTES:

1. See Standard Plan T51 for Temporary Silt Fence.
2. Dimensions may vary to fit field conditions.
3. Install a minimum of 3 flexible sediment barriers upstream of each drainage inlet to be protected.
4. Position erosion control blanket or geosynthetic fabric at edge of concrete apron and secure in trench.
5. Erosion control blanket or geosynthetic fabric is not required if the area adjacent to the drainage inlet is vegetated.

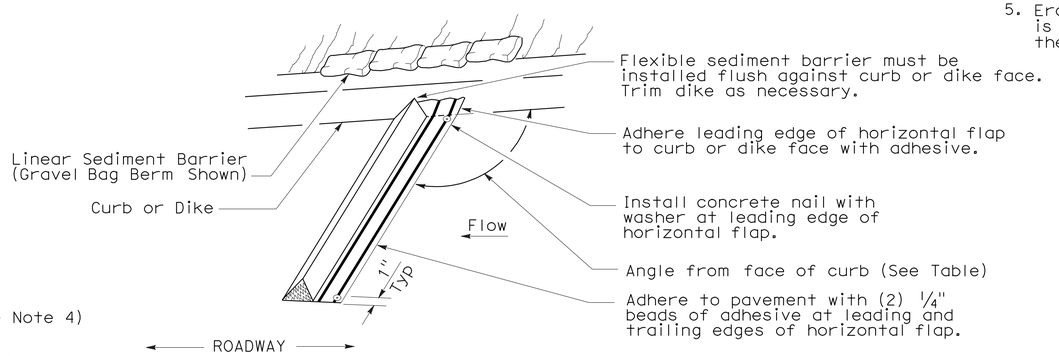

PERSPECTIVE

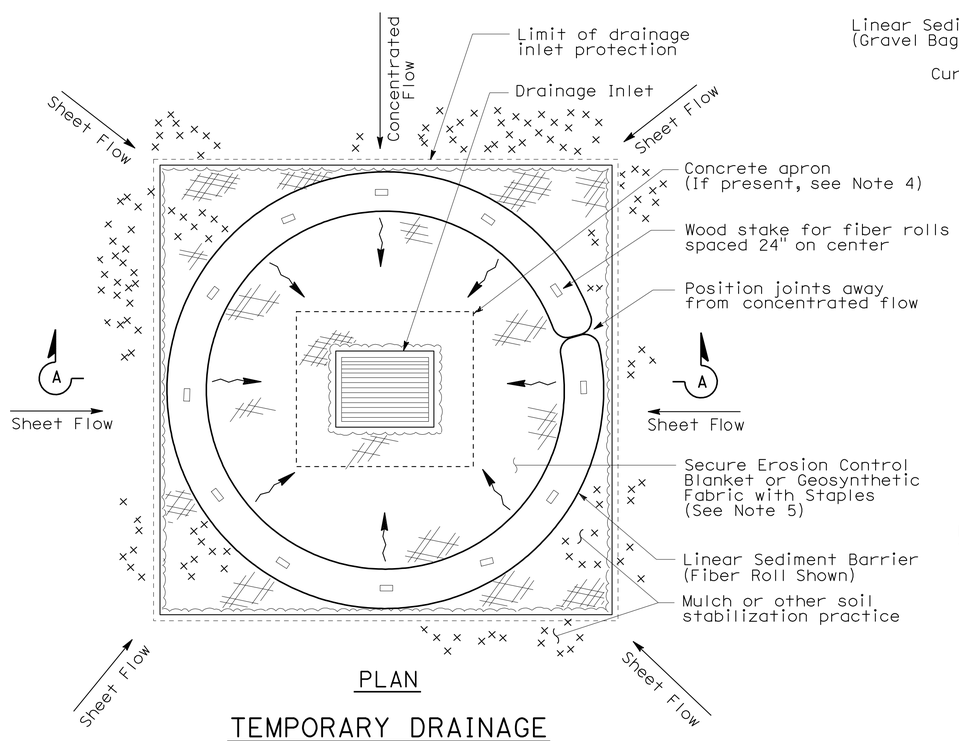

PLAN

TEMPORARY DRAINAGE INLET PROTECTION (TYPE 4A)

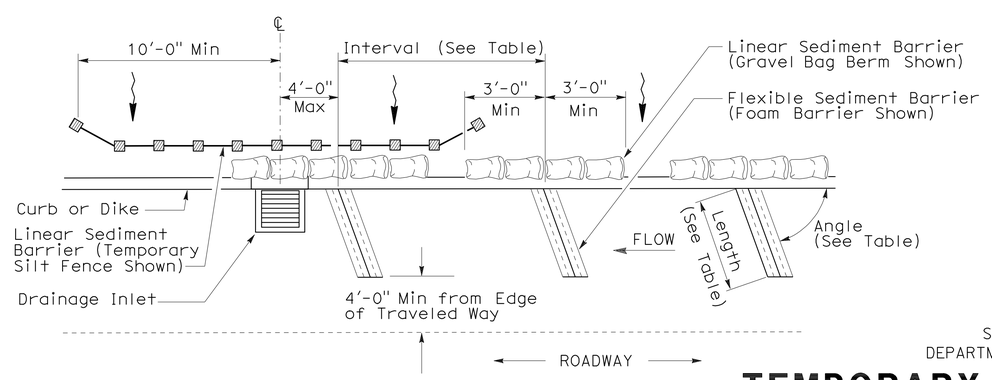

PLAN

TEMPORARY DRAINAGE INLET PROTECTION (TYPE 4B) FLEXIBLE SEDIMENT BARRIER

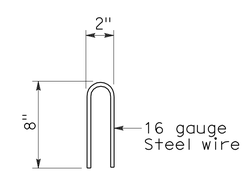

STAPLE DETAIL

STATE OF CALIFORNIA
DEPARTMENT OF TRANSPORTATION

TEMPORARY WATER POLLUTION CONTROL DETAILS (TEMPORARY DRAINAGE INLET PROTECTION)

NO SCALE

NSP T63 DATED AUGUST 15, 2008 SUPPLEMENTS THE STANDARD PLANS BOOK DATED MAY 2006.

NEW STANDARD PLAN NSP T63

2006 NEW STANDARD PLAN NSP T63

DIST	COUNTY	ROUTE	POST MILES TOTAL PROJECT	SHEET NO.	TOTAL SHEETS
05	SLO	1	9.5/10.0	39	40

LICENSED LANDSCAPE ARCHITECT

August 15, 2008
PLANS APPROVAL DATE

LICENSED LANDSCAPE ARCHITECT
Robert B. Schott 3625
Signature
11-04-08
Renewal Date
08-11-08
Date
STATE OF CALIFORNIA

The State of California or its officers or agents shall not be responsible for the accuracy or completeness of electronic copies of this plan sheet.

To accompany plans dated 5-10-10

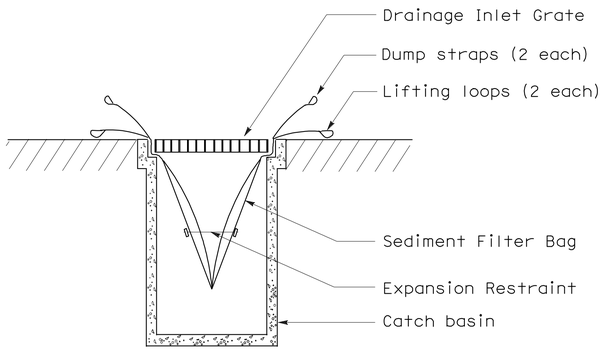

SECTION B-B

SEDIMENT FILTER BAG DETAIL

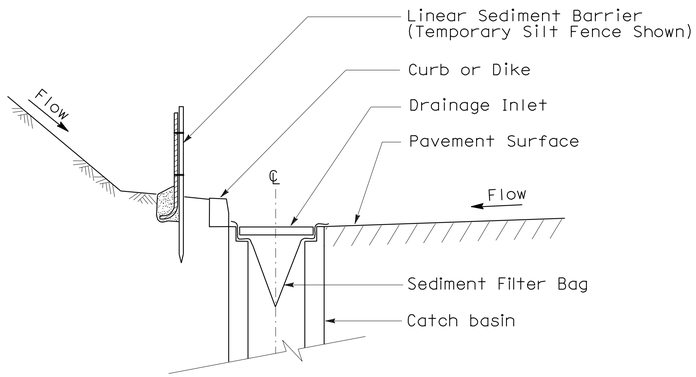

SECTION A-A

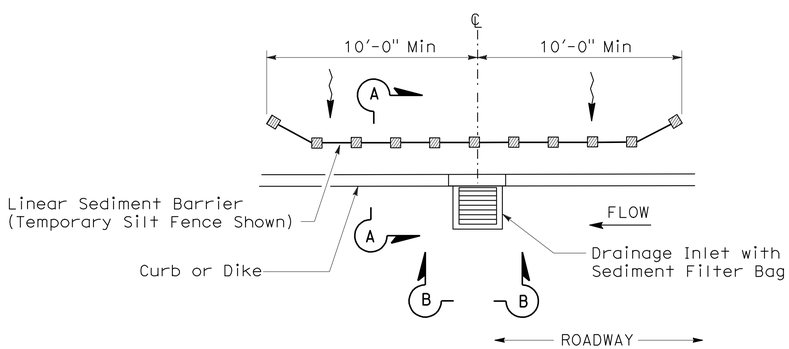

PLAN

TEMPORARY DRAINAGE INLET PROTECTION (TYPE 5) (SEDIMENT FILTER BAG)

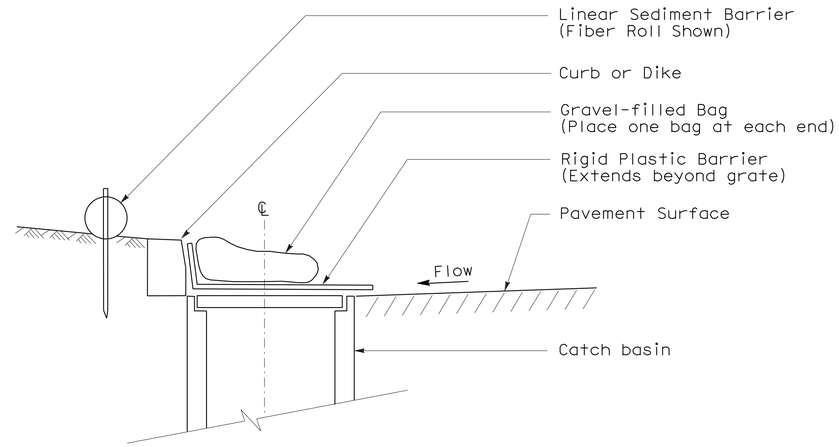

SECTION

TEMPORARY DRAINAGE INLET PROTECTION (TYPE 6A) (CATCH BASIN WITH GRATE)

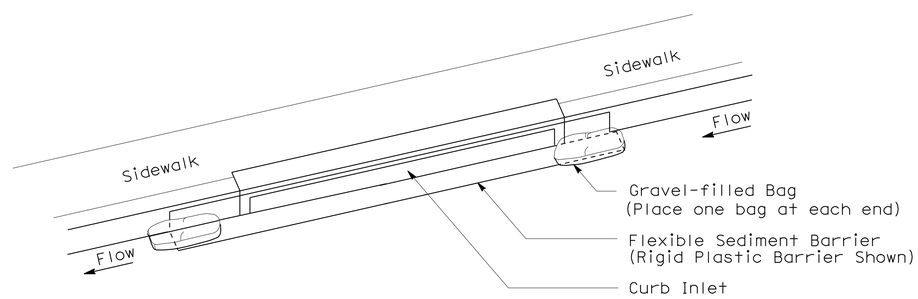

PERSPECTIVE

TEMPORARY DRAINAGE INLET PROTECTION (TYPE 6B) (CURB INLET WITHOUT GRATE)

NOTES:

1. See Standard Plan T51 for Temporary Silt Fence.
2. Dimensions may vary to fit field conditions.

STATE OF CALIFORNIA
DEPARTMENT OF TRANSPORTATION

TEMPORARY WATER POLLUTION CONTROL DETAILS (TEMPORARY DRAINAGE INLET PROTECTION)

NO SCALE

NSP T64 DATED AUGUST 15, 2008 SUPPLEMENTS THE STANDARD PLANS BOOK DATED MAY 2006.

NEW STANDARD PLAN NSP T64

2006 NEW STANDARD PLAN NSP T64

7-11-08

DIST	COUNTY	ROUTE	POST MILES TOTAL PROJECT	SHEET NO.	TOTAL SHEETS
05	SLO	1	9.5/10.0	40	40

LICENSED LANDSCAPE ARCHITECT

April 3, 2009
PLANS APPROVAL DATE

The State of California or its officers or agents shall not be responsible for the accuracy or completeness of electronic copies of this plan sheet.

LICENSED LANDSCAPE ARCHITECT — Robert B. Schott 3025 — Signature — 11-30-10 Renewal Date — 2-25-09 Date — STATE OF CALIFORNIA

To accompany plans dated 5-10-10

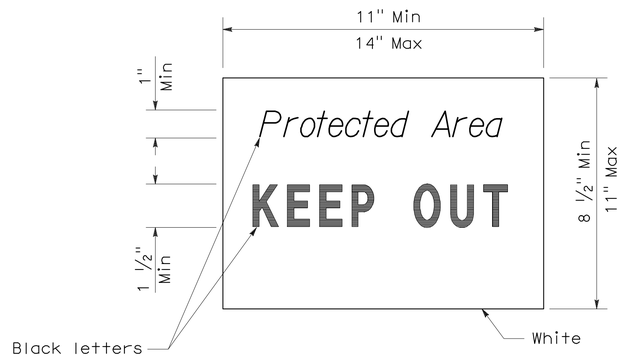

SIGN DETAIL

NOTE:

1. Temporary silt fence and temporary straw bale barrier shown for reference purposes only.

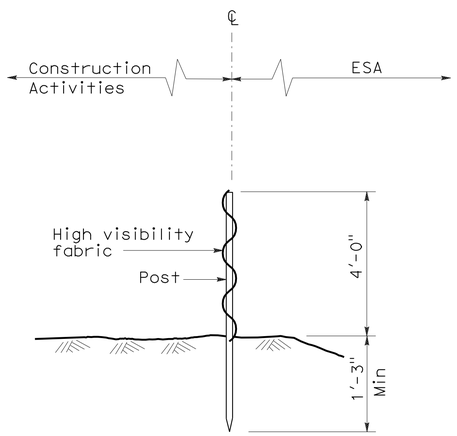

SECTION
TEMPORARY FENCE (TYPE ESA)

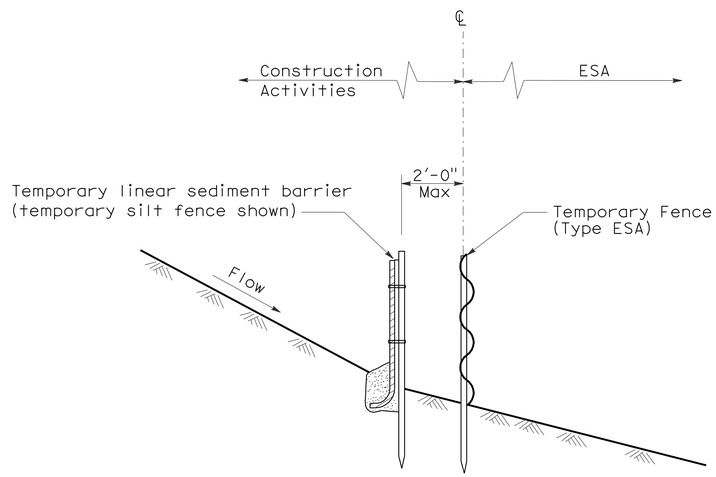

SECTION
PLACEMENT DETAIL
FOR TEMPORARY LINEAR SEDIMENT BARRIER
USED WITH TEMPORARY
FENCE (TYPE ESA)
(See Note 1)

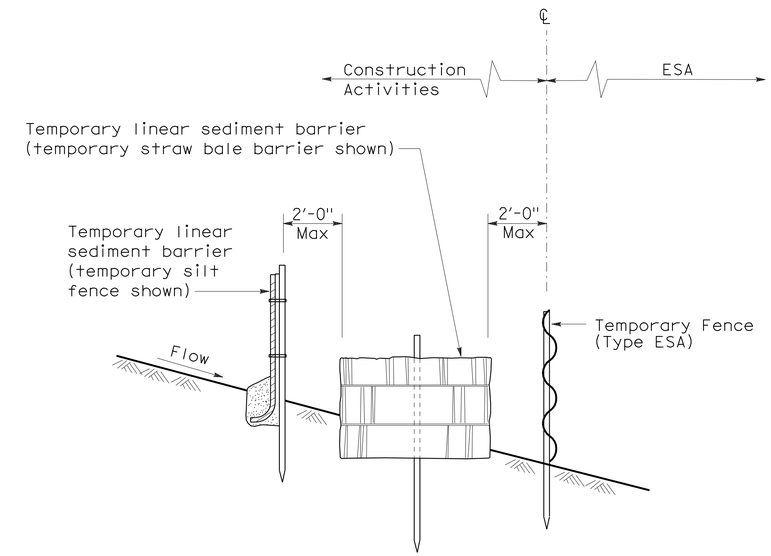

SECTION
PLACEMENT DETAIL
FOR TEMPORARY SILT FENCE
AND TEMPORARY STRAW BALE BARRIER
USED WITH TEMPORARY FENCE (TYPE ESA)
(See Note 1)

STATE OF CALIFORNIA
DEPARTMENT OF TRANSPORTATION

TEMPORARY WATER POLLUTION CONTROL DETAILS [TEMPORARY FENCE (TYPE ESA)]

NO SCALE

NSP T65 DATED APRIL 3, 2009 SUPPLEMENTS
THE STANDARD PLANS BOOK DATED MAY 2006.

NEW STANDARD PLAN NSP T65

2006 NEW STANDARD PLAN NSP T65