Dist	COUNTY	ROUTE	POST MILES TOTAL PROJECT	SHEET No.	TOTAL SHEETS
05	SB	166	0.9/2.4,3.8/4.8	1	84

STATE OF CALIFORNIA

DEPARTMENT OF TRANSPORTATION

ACSTP-P166(031)E

PROJECT PLANS FOR CONSTRUCTION ON

STATE HIGHWAY

IN SANTA BARBARA COUNTY NEAR GUADALUPE FROM SIMAS STREET TO 1.5 MILES EAST OF SIMAS STREET AND FROM BONITA SCHOOL ROAD TO BLACK ROAD

TO BE SUPPLEMENTED BY STANDARD PLANS DATED 2010

INDEX OF PLANS

SHEET No.	DESCRIPTION
1	TITLE AND LOCATION MAP
2-3	TYPICAL CROSS SECTIONS
4-14	LAYOUTS
15-25	PROFILES
26-37	CONSTRUCTION DETAILS
38	EROSION CONTROL PLAN, DETAILS AND QUANTITIES
39-59	DRAINAGE PLANS, PROFILES, DETAILS AND QUANTITIES
60-70	UTILITY PLANS
71	CONSTRUCTION AREA SIGNS
72-73	PAVEMENT DELINEATION PLANS, DETAILS AND QUANTITIES
74	SIGN PLANS, DETAILS AND QUANTITIES
75	SUMMARY OF QUANTITIES
76-80	ELECTRICAL PLANS
81-82	TRAFFIC CONTROL SYSTEMS
83-84	REVISED STANDARD PLANS

THE STANDARD PLANS LIST APPLICABLE TO THIS CONTRACT IS INCLUDED IN THE NOTICE TO BIDDERS AND SPECIAL PROVISIONS BOOK.

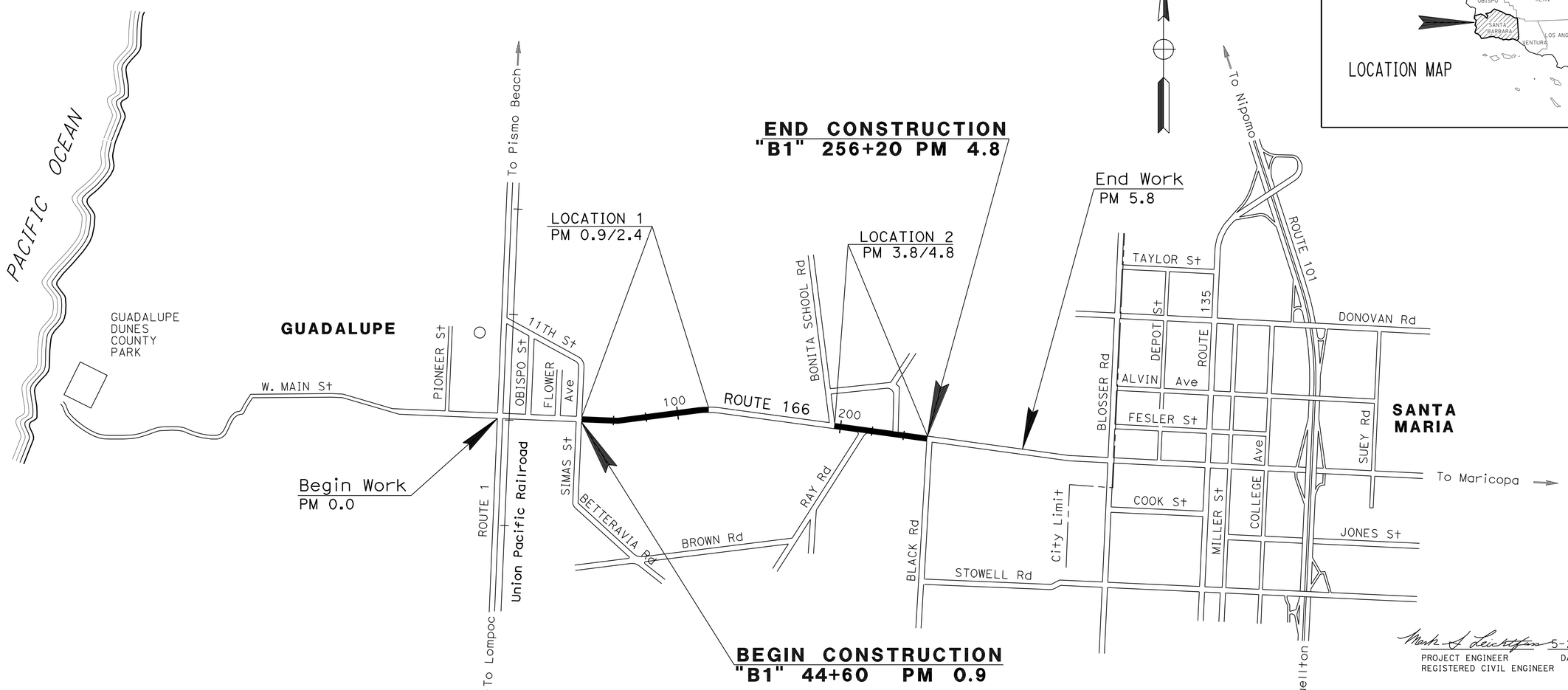

LOCATION MAP

Mark S. Leichtfuss 5-24-12
PROJECT ENGINEER DATE
REGISTERED CIVIL ENGINEER

REGISTERED PROFESSIONAL ENGINEER MARK S. LEICHTFUSS No. 69124 Exp. 6-30-12 CIVIL STATE OF CALIFORNIA

July 30, 2012
PLANS APPROVAL DATE

THE STATE OF CALIFORNIA OR ITS OFFICERS OR AGENTS SHALL NOT BE RESPONSIBLE FOR THE ACCURACY OR COMPLETENESS OF SCANNED COPIES OF THIS PLAN SHEET.

THE CONTRACTOR SHALL POSSESS THE CLASS (OR CLASSES) OF LICENSE AS SPECIFIED IN THE "NOTICE TO BIDDERS."

NO SCALE

CONTRACT No.	05-0G1604
PROJECT ID	0500000056

PROJECT MANAGER: DAVID BEARD
DESIGN ENGINEER: RON KRAEMER

LAST REVISION 5-24-12
DATE PLOTTED => 07-JAN-2013
TIME PLOTTED => 14:32

Dist	COUNTY	ROUTE	POST MILES TOTAL PROJECT	SHEET No.	TOTAL SHEETS
05	SB	166	0.9/2.4,3.8/4.8	2	84

REGISTERED CIVIL ENGINEER 5-24-12 DATE

7-30-12
PLANS APPROVAL DATE

REGISTERED PROFESSIONAL ENGINEER MARK S. LEICHTFUSS No. 69124 Exp. 6-30-12 CIVIL STATE OF CALIFORNIA

THE STATE OF CALIFORNIA OR ITS OFFICERS OR AGENTS SHALL NOT BE RESPONSIBLE FOR THE ACCURACY OR COMPLETENESS OF SCANNED COPIES OF THIS PLAN SHEET.

NOTES:

1. DIMENSIONS OF THE PAVEMENT STRUCTURES (STRUCTURAL SECTIONS) ARE SUBJECT TO TOLERANCES SPECIFIED IN THE STANDARD SPECIFICATIONS.
2. SUPERELEVATIONS ARE SHOWN ON THE SUPERELEVATION DIAGRAMS.

LEGEND:

UTP - UTILITY POLE

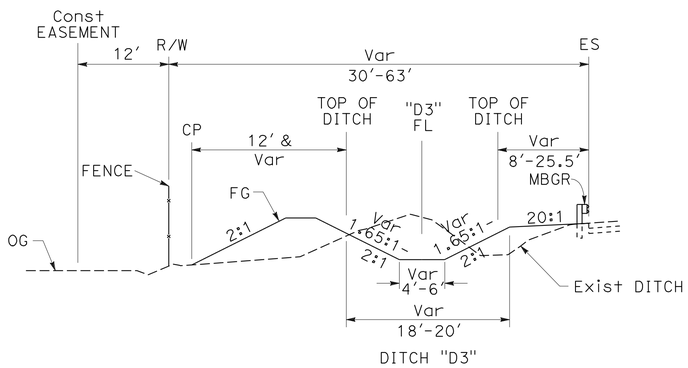

"B1" 202+00.00 TO "B1" 208+21.3

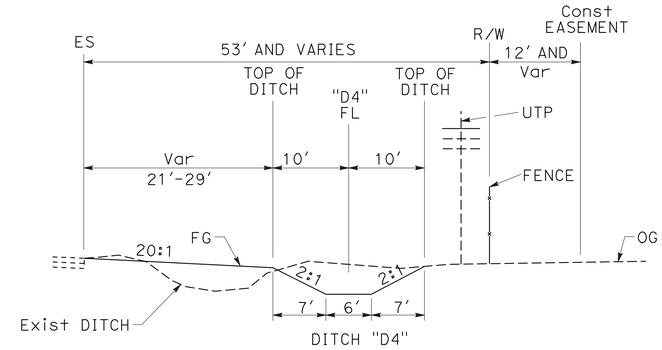

"B1" 199+50 TO "B1" 232+50

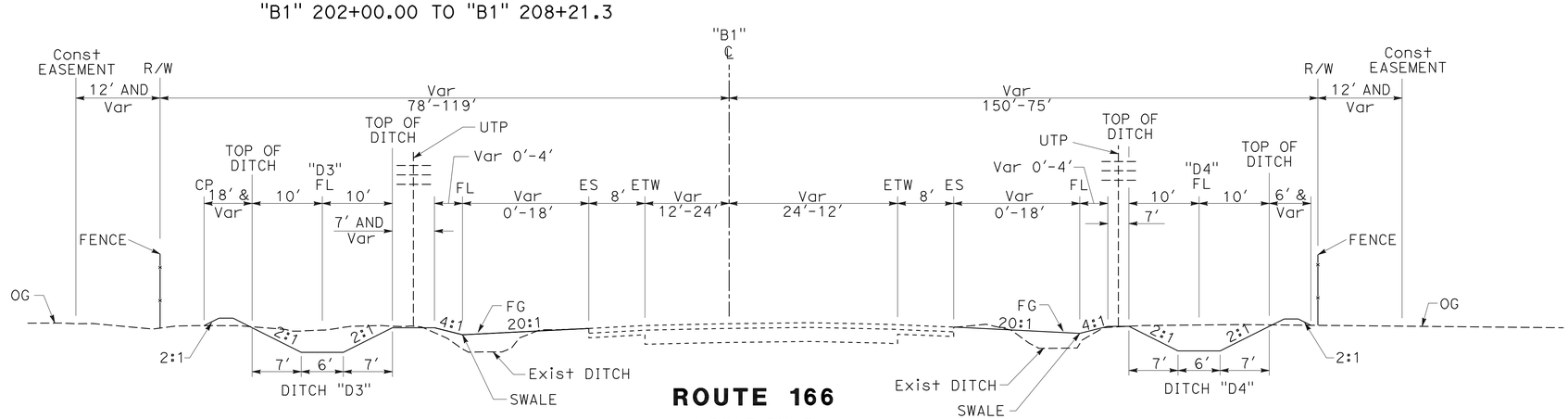

ROUTE 166
LOCATION 2
"B1" 199+50 TO "B1" 256+20

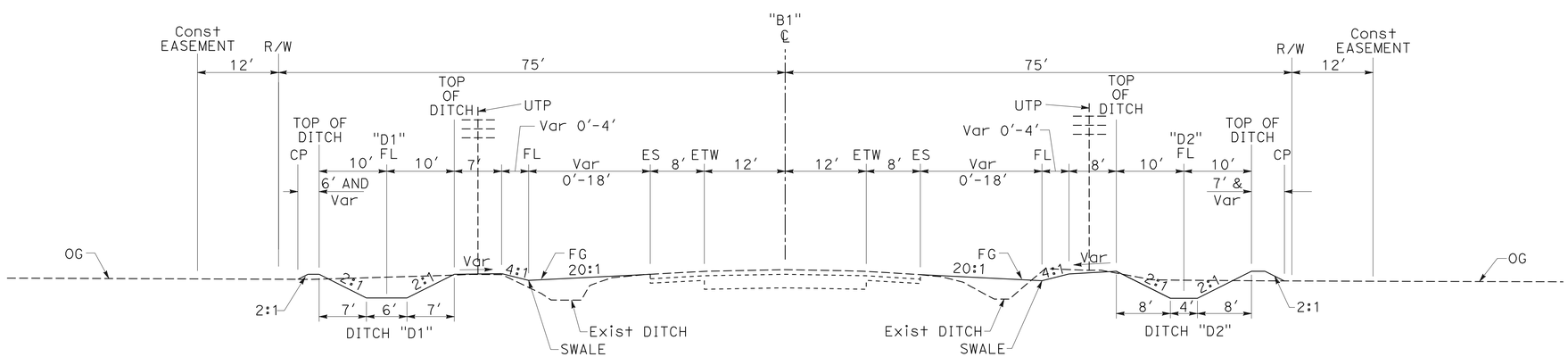

ROUTE 166
LOCATION 1
"B1" 44+60 TO "B1" 126+20

TYPICAL CROSS SECTIONS
NO SCALE

X-1

STATE OF CALIFORNIA - DEPARTMENT OF TRANSPORTATION
Caltrans® DESIGN
FUNCTIONAL SUPERVISOR: RON R. KRAEMER
CALCULATED-DESIGNED BY: MARK S. LEICHTFUSS
CHECKED BY: QUAY CHESTER
REVISED BY
DATE REVISED

LAST REVISION 5-24-12
DATE PLOTTED => 07-JAN-2013
TIME PLOTTED => 14:32

Dist	COUNTY	ROUTE	POST MILES TOTAL PROJECT	SHEET No.	TOTAL SHEETS
05	SB	166	0.9/2.4,3.8/4.8	3	84

Mark S. Leichtfuss 5-24-12
REGISTERED CIVIL ENGINEER DATE

7-30-12
PLANS APPROVAL DATE

REGISTERED PROFESSIONAL ENGINEER MARK S. LEICHTFUSS No. 69124 Exp. 6-30-12 CIVIL STATE OF CALIFORNIA

THE STATE OF CALIFORNIA OR ITS OFFICERS OR AGENTS SHALL NOT BE RESPONSIBLE FOR THE ACCURACY OR COMPLETENESS OF SCANNED COPIES OF THIS PLAN SHEET.

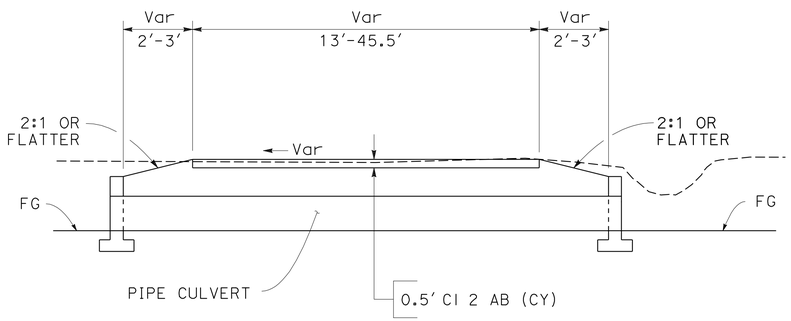

DRIVEWAY TYPICAL CROSS SECTION

Sta	*DS NO.
"B1" 59+42.88	4
"B1" 63+17.58	5
"B1" 71+64.20	6
"B1" 79+90.58	8
"B1" 90+98.98	9
"B1" 102+05.68	11
"B1" 111+84.11	14
"B1" 113+03.13	15
"B1" 121+75.54	17
"B1" 201+51.89	19
"B1" 225+32.41	27
"B1" 234+96.65	29

*DRAINAGE SYSTEM NUMBER

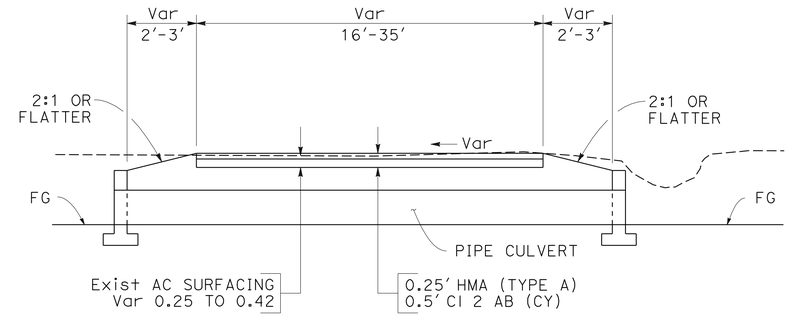

DRIVEWAY TYPICAL CROSS SECTION

Sta	*DS NO.
"B1" 73+39.09	7
"B1" 91+12.22	10
"B1" 101+90.70	12
"B1" 105+11.60	13
"B1" 121+68.82	16
"B1" 214+87.58	20
"B1" 247+38.09	31
"B1" 254+30.18	34

TYPICAL CROSS SECTIONS

NO SCALE

X-2

STATE OF CALIFORNIA - DEPARTMENT OF TRANSPORTATION
Caltrans® DESIGN

FUNCTIONAL SUPERVISOR: RON R. KRAEMER

QUAY CHESTER
MARK S. LEICHTFUSS

CALCULATED-DESIGNED BY
CHECKED BY

REVISED BY
DATE REVISED

LAST REVISION 5-24-12
DATE PLOTTED => 07-JAN-2013
TIME PLOTTED => 14:32

Dist	COUNTY	ROUTE	POST MILES TOTAL PROJECT	SHEET No.	TOTAL SHEETS
05	SB	166	0.9/2.4,3.8/4.8	4	84

REGISTERED CIVIL ENGINEER 5-24-12 DATE

7-30-12
PLANS APPROVAL DATE

REGISTERED PROFESSIONAL ENGINEER MARK S. LEICHTFUSS No. 69124 Exp. 6-30-12 CIVIL STATE OF CALIFORNIA

THE STATE OF CALIFORNIA OR ITS OFFICERS OR AGENTS SHALL NOT BE RESPONSIBLE FOR THE ACCURACY OR COMPLETENESS OF SCANNED COPIES OF THIS PLAN SHEET.

NOTE:

FOR ACCURATE RIGHT OF WAY DATA, CONTACT RIGHT OF WAY ENGINEERING AT THE DISTRICT OFFICE.

LEGEND:

- (No.) DRAINAGE SYSTEM NUMBER
- (x) DRAINAGE UNIT
- RS (XX) RESET ROADSIDE SIGN
- RMB (*) RESET MAILBOX, (*) MULTIPLE MAILBOXES
- IL OBJECT MARKER TYPE L-1 (OM2-1V OR 2V)
- IF DELINEATOR TYPE F-1

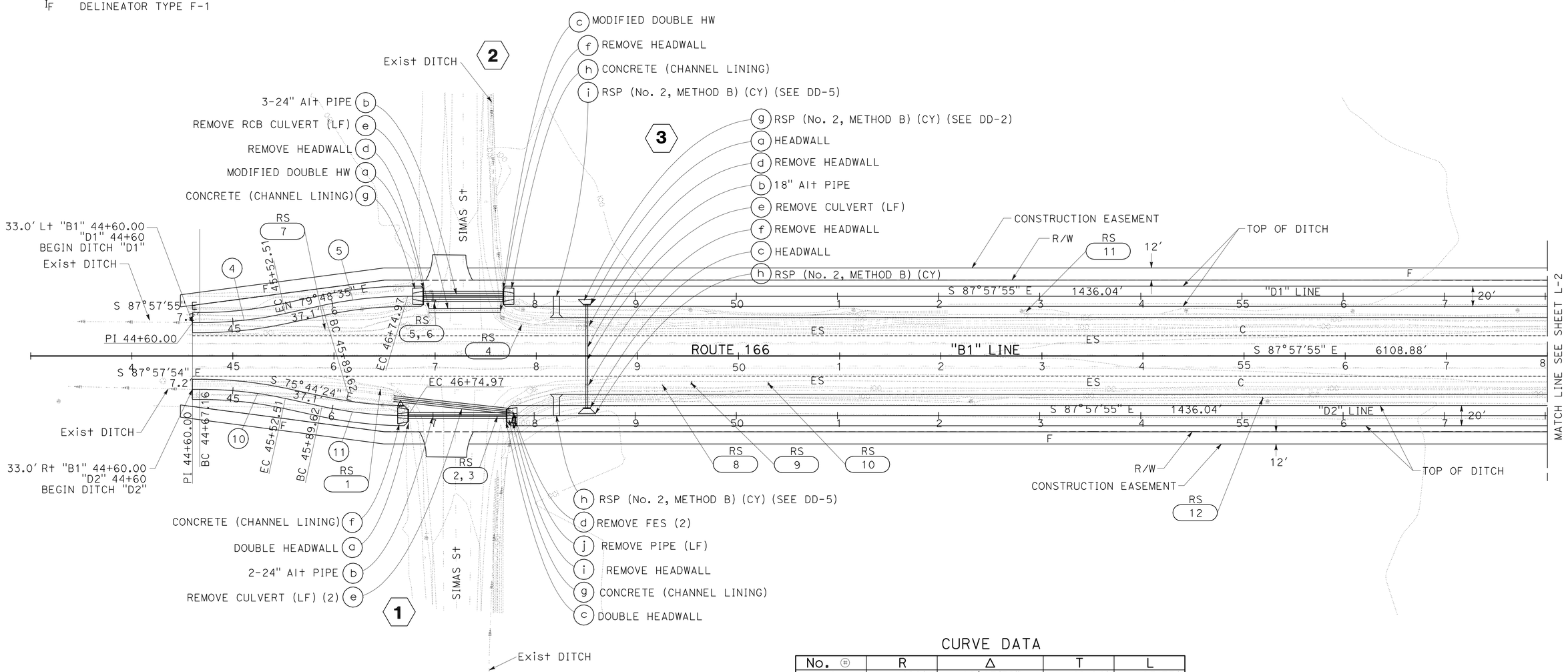

CURVE DATA

No. (#)	R	Δ	T	L
4	400'	12°13'30"	42.84'	85.35'
5	400'	12°13'30"	42.84'	85.35'
10	400'	12°13'31"	42.84'	85.35'
11	400'	12°13'30"	42.84'	85.35'

LOCATION 1
LAYOUT
SCALE: 1" = 50'

L-1

STATE OF CALIFORNIA - DEPARTMENT OF TRANSPORTATION
Caltrans
DESIGN

FUNCTIONAL SUPERVISOR: RON R. KRAEMER
CALCULATED-DESIGNED BY: RAHIM IBRAHIMI
CHECKED BY: MARK S. LEICHTFUSS
REVISED BY
DATE REVISED

LAST REVISION 5-24-12
DATE PLOTTED => 07-JAN-2013
TIME PLOTTED => 14:33

Dist	COUNTY	ROUTE	POST MILES TOTAL PROJECT	SHEET No.	TOTAL SHEETS
05	SB	166	0.9/2.4,3.8/4.8	5	84

REGISTERED CIVIL ENGINEER 5-24-12 DATE

7-30-12
PLANS APPROVAL DATE

REGISTERED PROFESSIONAL ENGINEER MARK S. LEICHTFUSS No. 69124 Exp. 6-30-12 CIVIL STATE OF CALIFORNIA

THE STATE OF CALIFORNIA OR ITS OFFICERS OR AGENTS SHALL NOT BE RESPONSIBLE FOR THE ACCURACY OR COMPLETENESS OF SCANNED COPIES OF THIS PLAN SHEET.

NOTE:

FOR ACCURATE RIGHT OF WAY DATA, CONTACT RIGHT OF WAY ENGINEERING AT THE DISTRICT OFFICE.

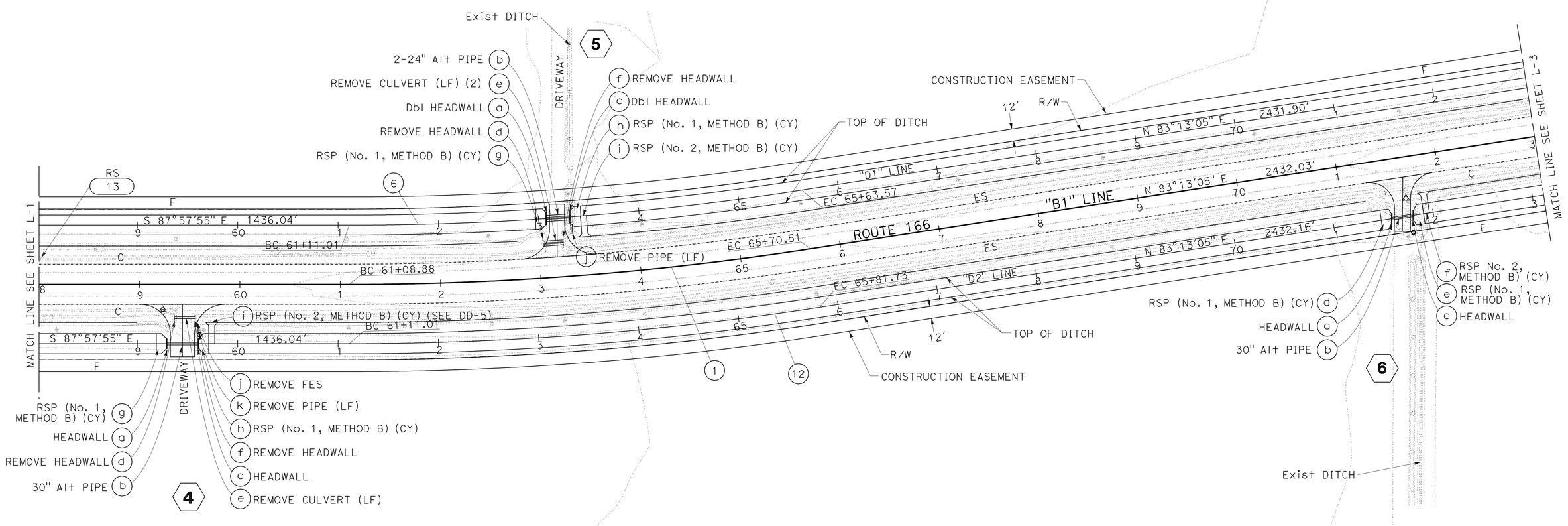

CURVE DATA

No. ⊕	R	Δ	T	L
1	3000′	8°49′00″	231.28′	461.64′
6	2941′	8°49′00″	226.73′	452.56′
12	3059′	8°49′00″	235.82′	470.72′

LOCATION 1
LAYOUT
SCALE: 1" = 50′

L-2

STATE OF CALIFORNIA - DEPARTMENT OF TRANSPORTATION
Caltrans® **DESIGN**

FUNCTIONAL SUPERVISOR: RON R. KRAEMER
CALCULATED-DESIGNED BY: RAHIM IBRAHIMI
CHECKED BY: MARK S. LEICHTFUSS
REVISED BY
DATE REVISED

LAST REVISION 5-24-12
DATE PLOTTED => 07-JAN-2013
TIME PLOTTED => 14:33

Dist	COUNTY	ROUTE	POST MILES TOTAL PROJECT	SHEET No.	TOTAL SHEETS
05	SB	166	0.9/2.4,3.8/4.8	6	84

Mark S. Leichtfuss 5-24-12
REGISTERED CIVIL ENGINEER DATE

7-30-12
PLANS APPROVAL DATE

REGISTERED PROFESSIONAL ENGINEER MARK S. LEICHTFUSS No. 69124 Exp. 6-30-12 CIVIL STATE OF CALIFORNIA

THE STATE OF CALIFORNIA OR ITS OFFICERS OR AGENTS SHALL NOT BE RESPONSIBLE FOR THE ACCURACY OR COMPLETENESS OF SCANNED COPIES OF THIS PLAN SHEET.

NOTE:

FOR ACCURATE RIGHT OF WAY DATA, CONTACT RIGHT OF WAY ENGINEERING AT THE DISTRICT OFFICE.

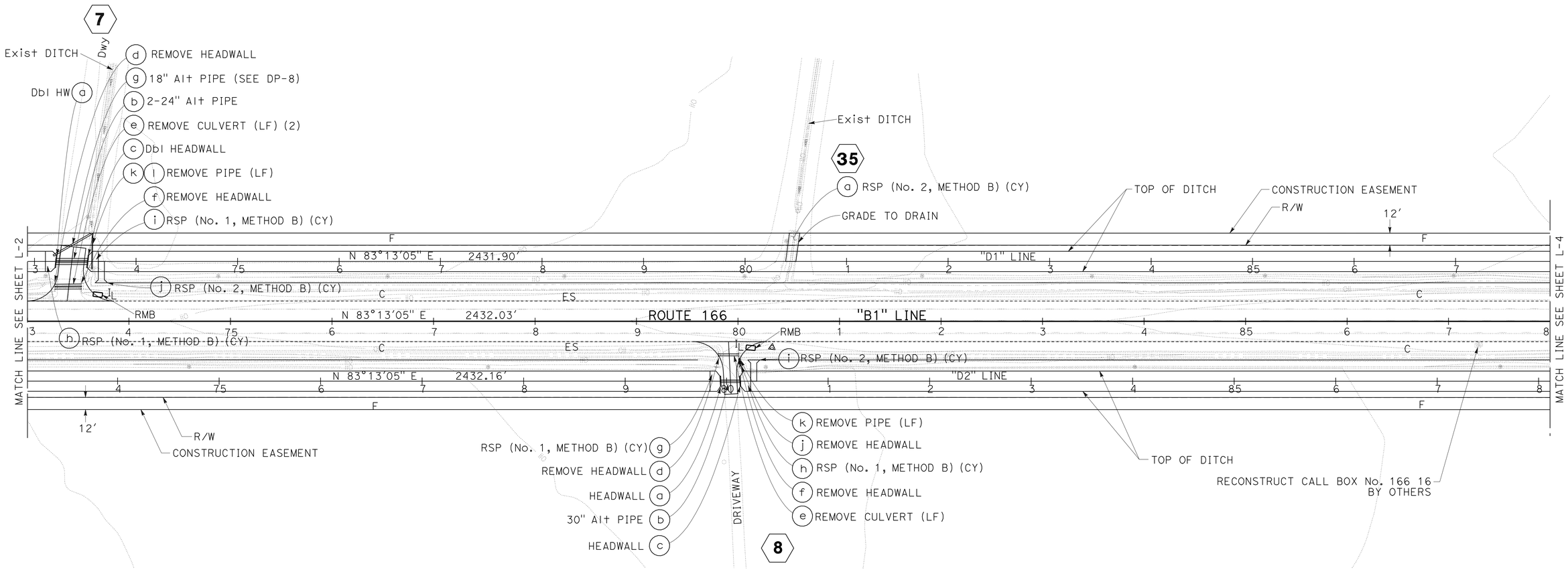

LOCATION 1
LAYOUT
SCALE: 1" = 50'

L-3

STATE OF CALIFORNIA - DEPARTMENT OF TRANSPORTATION
Caltrans
DESIGN

FUNCTIONAL SUPERVISOR: RON R. KRAEMER
CALCULATED-DESIGNED BY: RAHIM IBRAHIMI
CHECKED BY: MARK S. LEICHTFUSS
REVISED BY
DATE REVISED

LAST REVISION 5-24-12
DATE PLOTTED => 07-JAN-2013
TIME PLOTTED => 14:33

Dist	COUNTY	ROUTE	POST MILES TOTAL PROJECT	SHEET No.	TOTAL SHEETS
05	SB	166	0.9/2.4,3.8/4.8	7	84

Mark S. Leichtfuss 5-24-12
REGISTERED CIVIL ENGINEER DATE

7-30-12
PLANS APPROVAL DATE

REGISTERED PROFESSIONAL ENGINEER MARK S. LEICHTFUSS No. 69124 Exp. 6-30-12 CIVIL STATE OF CALIFORNIA

THE STATE OF CALIFORNIA OR ITS OFFICERS OR AGENTS SHALL NOT BE RESPONSIBLE FOR THE ACCURACY OR COMPLETENESS OF SCANNED COPIES OF THIS PLAN SHEET.

NOTE:

FOR ACCURATE RIGHT OF WAY DATA, CONTACT RIGHT OF WAY ENGINEERING AT THE DISTRICT OFFICE.

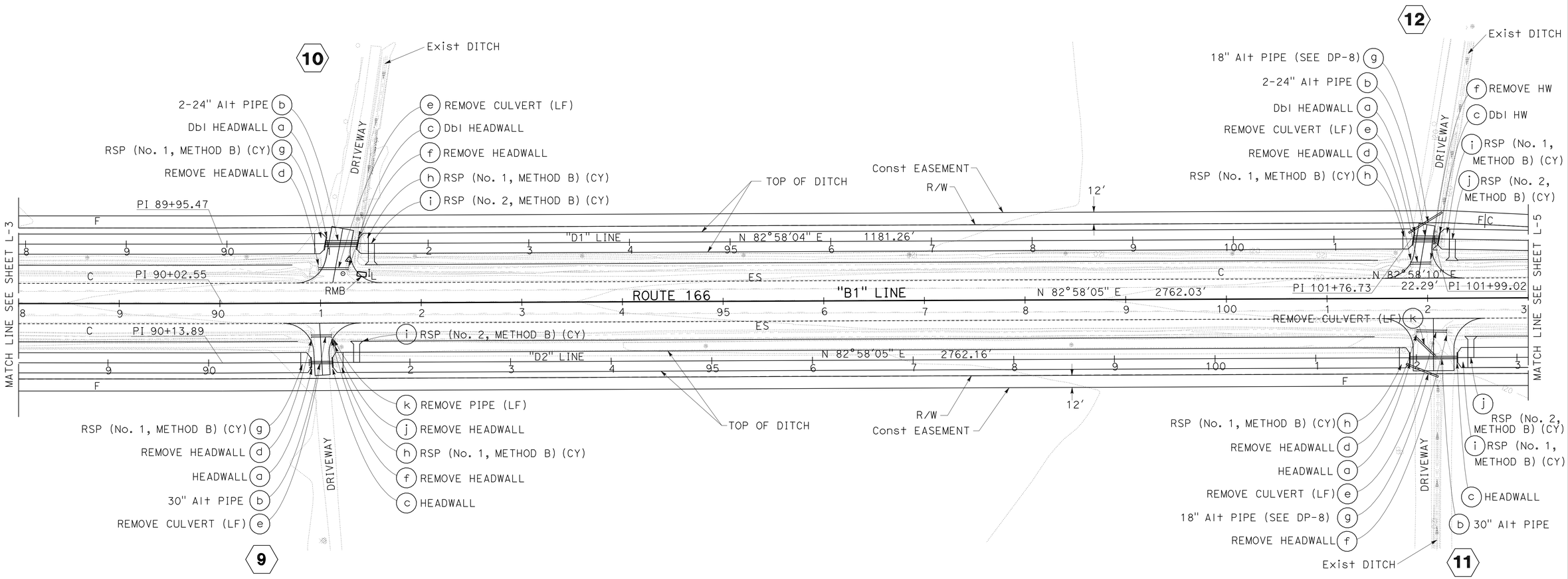

LOCATION 1
LAYOUT
SCALE: 1" = 50'

L-4

STATE OF CALIFORNIA - DEPARTMENT OF TRANSPORTATION
Caltrans
DESIGN

FUNCTIONAL SUPERVISOR: RON R. KRAEMER
CALCULATED-DESIGNED BY: RAHIM IBRAHIMI
CHECKED BY: MARK S. LEICHTFUSS
REVISED BY
DATE REVISED

LAST REVISION 5-24-12
DATE PLOTTED => 07-JAN-2013
TIME PLOTTED => 14:33

Dist	COUNTY	ROUTE	POST MILES TOTAL PROJECT	SHEET No.	TOTAL SHEETS
05	SB	166	0.9/2.4,3.8/4.8	8	84

Mark S. Leichtfuss 5-24-12
REGISTERED CIVIL ENGINEER DATE

7-30-12
PLANS APPROVAL DATE

REGISTERED PROFESSIONAL ENGINEER MARK S. LEICHTFUSS No. 69124 Exp. 6-30-12 CIVIL STATE OF CALIFORNIA

THE STATE OF CALIFORNIA OR ITS OFFICERS OR AGENTS SHALL NOT BE RESPONSIBLE FOR THE ACCURACY OR COMPLETENESS OF SCANNED COPIES OF THIS PLAN SHEET.

NOTE:

FOR ACCURATE RIGHT OF WAY DATA, CONTACT RIGHT OF WAY ENGINEERING AT THE DISTRICT OFFICE.

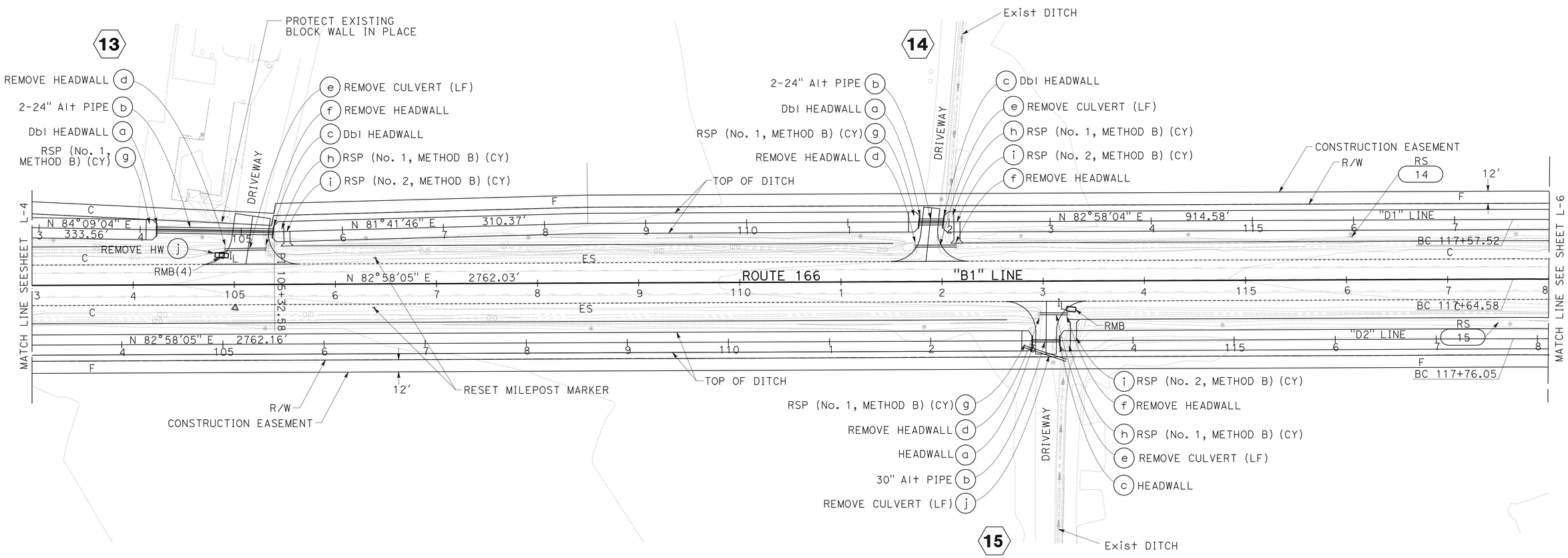

LOCATION 1
LAYOUT
SCALE: 1" = 50'

L-5

REVISED BY	DATE REVISED
RAHIM IBRAHIMI	MARK S. LEICHTFUSS

CALCULATED-DESIGNED BY | CHECKED BY

FUNCTIONAL SUPERVISOR: RON R. KRAEMER

STATE OF CALIFORNIA - DEPARTMENT OF TRANSPORTATION
Caltrans® **DESIGN**

LAST REVISION 5-24-12 | DATE PLOTTED => 07-JAN-2013 | TIME PLOTTED => 14:33

Dist	COUNTY	ROUTE	POST MILES TOTAL PROJECT	SHEET No.	TOTAL SHEETS
05	SB	166	0.9/2.4,3.8/4.8	9	84

REGISTERED CIVIL ENGINEER 5-24-12 DATE

7-30-12
PLANS APPROVAL DATE

REGISTERED PROFESSIONAL ENGINEER MARK S. LEICHTFUSS No. 69124 Exp. 6-30-12 CIVIL STATE OF CALIFORNIA

THE STATE OF CALIFORNIA OR ITS OFFICERS OR AGENTS SHALL NOT BE RESPONSIBLE FOR THE ACCURACY OR COMPLETENESS OF SCANNED COPIES OF THIS PLAN SHEET.

NOTE:

FOR ACCURATE RIGHT OF WAY DATA, CONTACT RIGHT OF WAY ENGINEERING AT THE DISTRICT OFFICE.

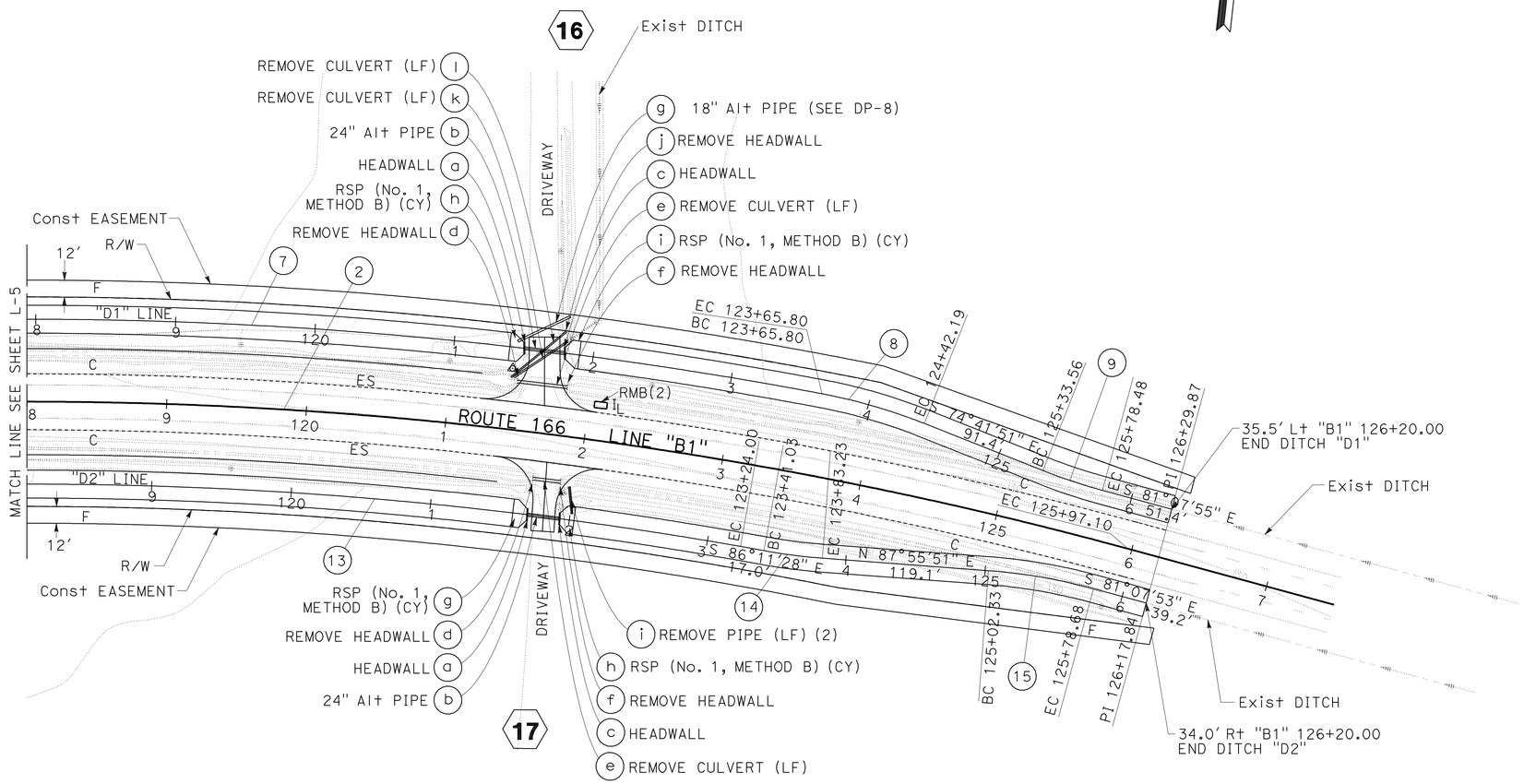

CURVE DATA

No. ⊕	R	Δ	T	L
2	3000′	15°54′00"	418.95′	832.52′
7	3059′	11°23′36"	305.15′	608.28′
8	400′	10°56′28"	38.31′	76.38′
9	400′	6°26′04"	22.48′	44.92′
13	2941′	10°40′31"	274.77′	547.96′
14	400′	6°2′38"	21.12′	42.19′
15	400′	10°56′12"	38.29′	76.35′

LOCATION 1
LAYOUT
SCALE: 1" = 50′

L-6

STATE OF CALIFORNIA - DEPARTMENT OF TRANSPORTATION
Caltrans
DESIGN

FUNCTIONAL SUPERVISOR: RON R. KRAEMER
CALCULATED-DESIGNED BY: RAHIM IBRAHIMI
CHECKED BY: MARK S. LEICHTFUSS
REVISED BY
DATE REVISED

LAST REVISION 5-24-12
DATE PLOTTED => 07-JAN-2013
TIME PLOTTED => 14:33

Dist	COUNTY	ROUTE	POST MILES TOTAL PROJECT	SHEET No.	TOTAL SHEETS
05	SB	166	0.9/2.4,3.8/4.8	10	84

REGISTERED CIVIL ENGINEER 5-24-12 DATE

7-30-12
PLANS APPROVAL DATE

REGISTERED PROFESSIONAL ENGINEER MARK S. LEICHTFUSS No. 69124 Exp. 6-30-12 CIVIL STATE OF CALIFORNIA

THE STATE OF CALIFORNIA OR ITS OFFICERS OR AGENTS SHALL NOT BE RESPONSIBLE FOR THE ACCURACY OR COMPLETENESS OF SCANNED COPIES OF THIS PLAN SHEET.

NOTE:

FOR ACCURATE RIGHT OF WAY AND ACCESS DATA, CONTACT RIGHT OF WAY ENGINEERING AT THE DISTRICT OFFICE.

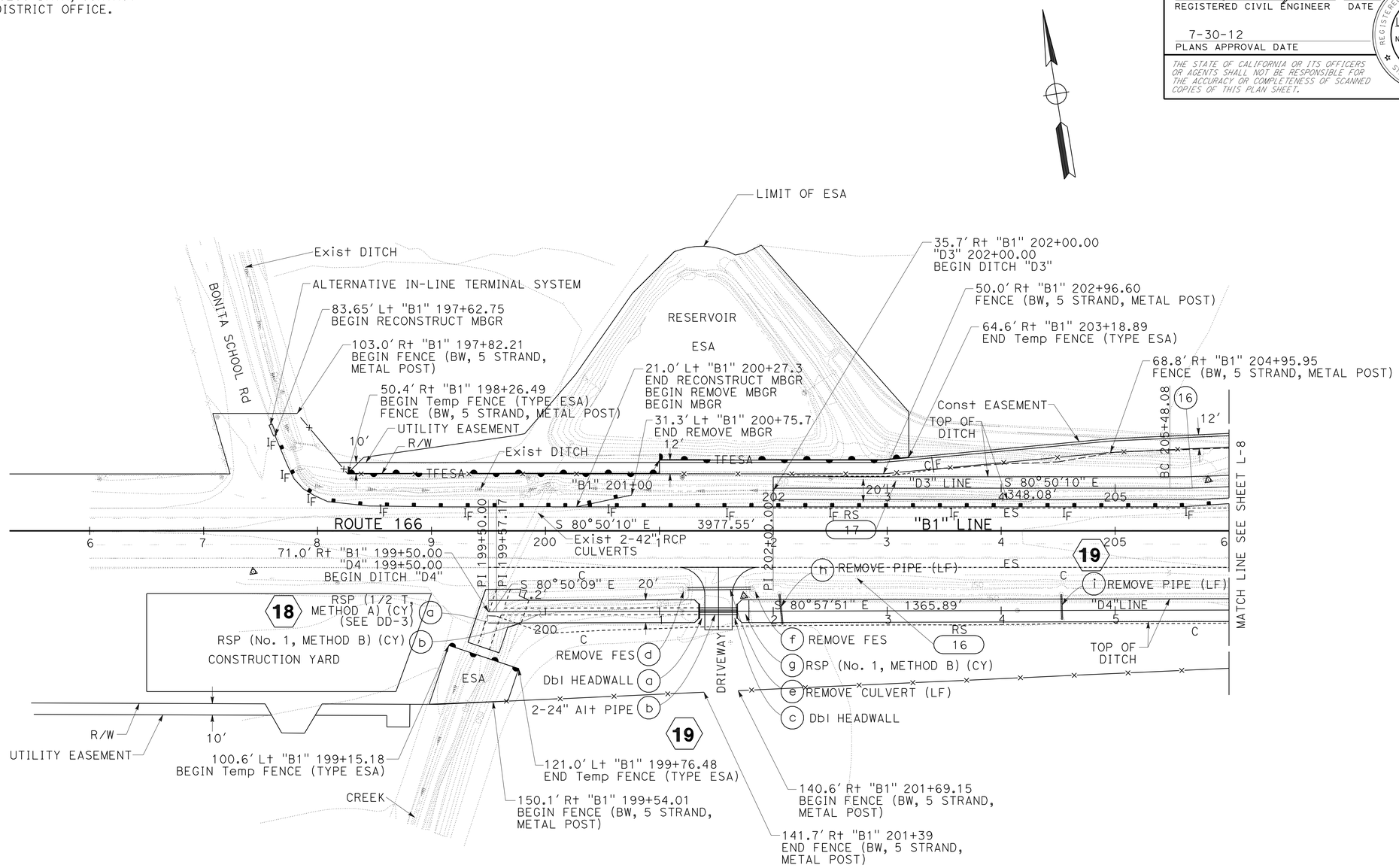

CURVE DATA

No. ⊕	R	Δ	T	L
16	1000'	3°58'47"	34.74'	69.46'

LOCATION 2
LAYOUT
SCALE: 1" = 50'

L-7

STATE OF CALIFORNIA - DEPARTMENT OF TRANSPORTATION
Caltrans® **DESIGN**

FUNCTIONAL SUPERVISOR: RON R. KRAEMER

CALCULATED-DESIGNED BY: AMJED HETTINI
CHECKED BY: MARK S. LEICHTFUSS
REVISED BY
DATE REVISED

LAST REVISION 5-24-12
DATE PLOTTED => 07-JAN-2013
TIME PLOTTED => 14:33

Dist	COUNTY	ROUTE	POST MILES TOTAL PROJECT	SHEET No.	TOTAL SHEETS
05	SB	166	0.9/2.4,3.8/4.8	11	84

REGISTERED CIVIL ENGINEER 5-24-12 DATE

7-30-12
PLANS APPROVAL DATE

REGISTERED PROFESSIONAL ENGINEER MARK S. LEICHTFUSS No. 69124 Exp. 6-30-12 CIVIL STATE OF CALIFORNIA

THE STATE OF CALIFORNIA OR ITS OFFICERS OR AGENTS SHALL NOT BE RESPONSIBLE FOR THE ACCURACY OR COMPLETENESS OF SCANNED COPIES OF THIS PLAN SHEET.

NOTE:

FOR ACCURATE RIGHT OF WAY AND ACCESS DATA, CONTACT RIGHT OF WAY ENGINEERING AT THE DISTRICT OFFICE.

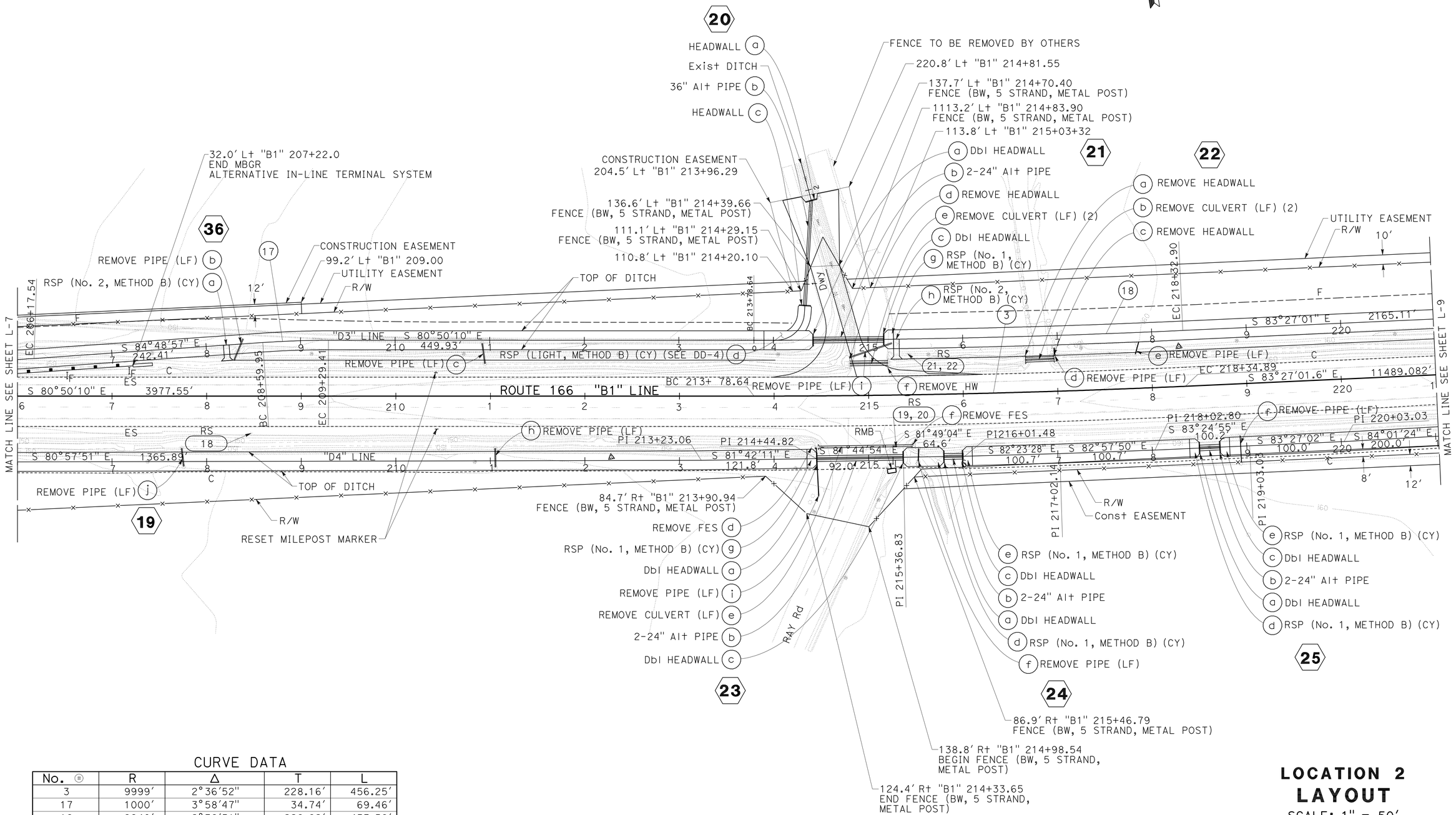

CURVE DATA

No. (#)	R	Δ	T	L
3	9999'	2°36'52"	228.16'	456.25'
17	1000'	3°58'47"	34.74'	69.46'
18	9940'	2°36'51"	226.82'	453.56'

LOCATION 2
LAYOUT
SCALE: 1" = 50'

L-8

REVISED BY | DATE REVISED
AMJED HETTINI | MARK S. LEICHTFUSS
CALCULATED-DESIGNED BY | CHECKED BY
FUNCTIONAL SUPERVISOR
RON R. KRAEMER

STATE OF CALIFORNIA - DEPARTMENT OF TRANSPORTATION
Caltrans
DESIGN

LAST REVISION 5-24-12
DATE PLOTTED => 07-JAN-2013
TIME PLOTTED => 14:33

Dist	COUNTY	ROUTE	POST MILES TOTAL PROJECT	SHEET No.	TOTAL SHEETS
05	SB	166	0.9/2.4,3.8/4.8	12	84

Mark S. Leichtfuss 5-24-12
REGISTERED CIVIL ENGINEER DATE

7-30-12
PLANS APPROVAL DATE

REGISTERED PROFESSIONAL ENGINEER MARK S. LEICHTFUSS No. 69124 Exp. 6-30-12 CIVIL STATE OF CALIFORNIA

THE STATE OF CALIFORNIA OR ITS OFFICERS OR AGENTS SHALL NOT BE RESPONSIBLE FOR THE ACCURACY OR COMPLETENESS OF SCANNED COPIES OF THIS PLAN SHEET.

NOTE:

FOR ACCURATE RIGHT OF WAY AND ACCESS DATA, CONTACT RIGHT OF WAY ENGINEERING AT THE DISTRICT OFFICE.

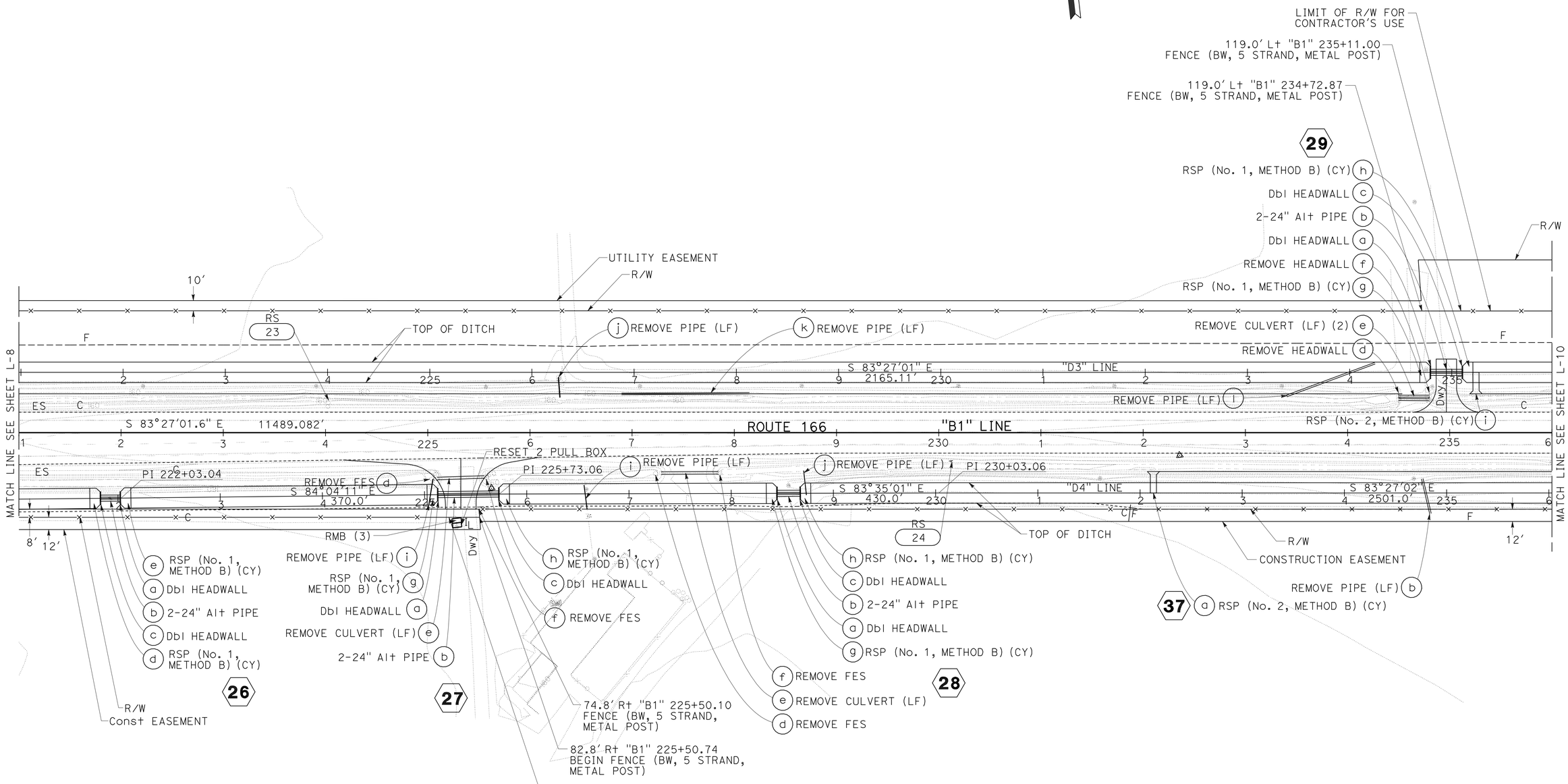

LOCATION 2
LAYOUT
SCALE: 1" = 50'

L-9

STATE OF CALIFORNIA - DEPARTMENT OF TRANSPORTATION
Caltrans
DESIGN

FUNCTIONAL SUPERVISOR: RON R. KRAEMER
CALCULATED-DESIGNED BY: AMJED HETTINI
CHECKED BY: MARK S. LEICHTFUSS
REVISED BY
DATE REVISED

LAST REVISION 5-24-12
DATE PLOTTED => 07-JAN-2013
TIME PLOTTED => 14:33

Dist	COUNTY	ROUTE	POST MILES TOTAL PROJECT	SHEET No.	TOTAL SHEETS
05	SB	166	0.9/2.4,3.8/4.8	13	84

Mark S. Leichtfuss 5-24-12
REGISTERED CIVIL ENGINEER DATE

7-30-12
PLANS APPROVAL DATE

REGISTERED PROFESSIONAL ENGINEER MARK S. LEICHTFUSS No. 69124 Exp. 6-30-12 CIVIL STATE OF CALIFORNIA

THE STATE OF CALIFORNIA OR ITS OFFICERS OR AGENTS SHALL NOT BE RESPONSIBLE FOR THE ACCURACY OR COMPLETENESS OF SCANNED COPIES OF THIS PLAN SHEET.

NOTE:

FOR ACCURATE RIGHT OF WAY AND ACCESS DATA, CONTACT RIGHT OF WAY ENGINEERING AT THE DISTRICT OFFICE.

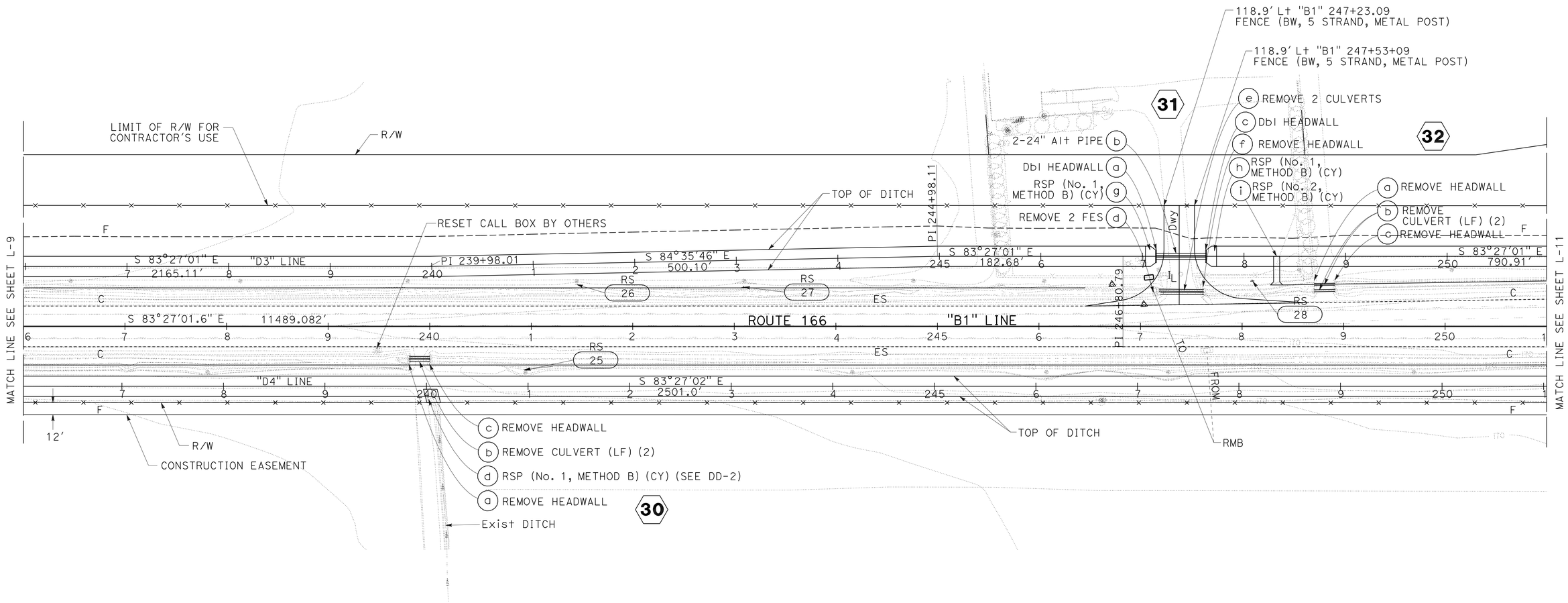

LOCATION 2
LAYOUT
SCALE: 1" = 50'

L-10

STATE OF CALIFORNIA - DEPARTMENT OF TRANSPORTATION
Caltrans
DESIGN

FUNCTIONAL SUPERVISOR: RON R. KRAEMER
CALCULATED-DESIGNED BY: AMJED HETTINI
CHECKED BY: MARK S. LEICHTFUSS
REVISED BY
DATE REVISED

LAST REVISION 5-24-12
DATE PLOTTED => 07-JAN-2013
TIME PLOTTED => 14:33

Dist	COUNTY	ROUTE	POST MILES TOTAL PROJECT	SHEET No.	TOTAL SHEETS
05	SB	166	0.9/2.4,3.8/4.8	14	84

REGISTERED CIVIL ENGINEER 5-24-12 DATE

7-30-12
PLANS APPROVAL DATE

REGISTERED PROFESSIONAL ENGINEER MARK S. LEICHTFUSS No. 69124 Exp. 6-30-12 CIVIL STATE OF CALIFORNIA

THE STATE OF CALIFORNIA OR ITS OFFICERS OR AGENTS SHALL NOT BE RESPONSIBLE FOR THE ACCURACY OR COMPLETENESS OF SCANNED COPIES OF THIS PLAN SHEET.

NOTE:

FOR ACCURATE RIGHT OF WAY AND ACCESS DATA, CONTACT RIGHT OF WAY ENGINEERING AT THE DISTRICT OFFICE.

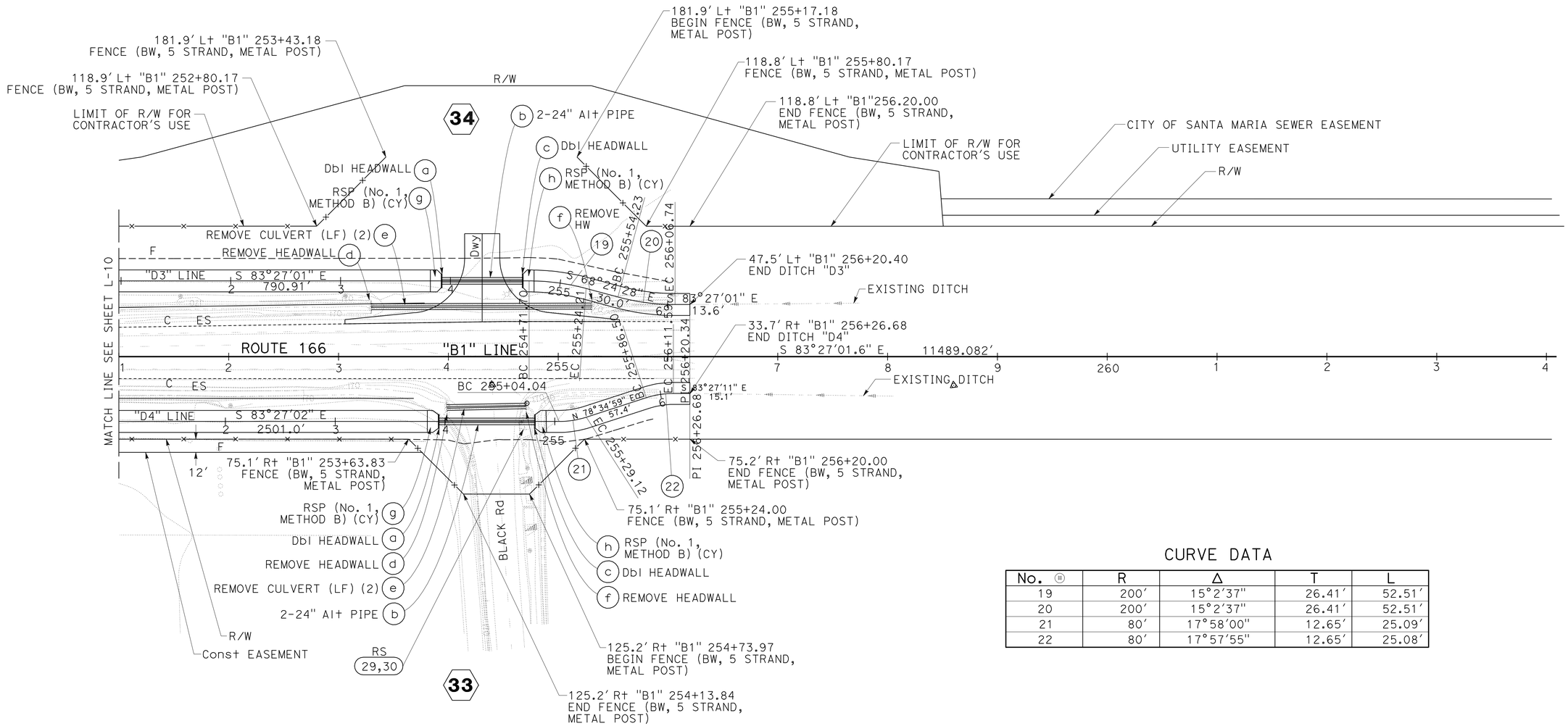

CURVE DATA

No. ⊕	R	Δ	T	L
19	200'	15°2'37"	26.41'	52.51'
20	200'	15°2'37"	26.41'	52.51'
21	80'	17°58'00"	12.65'	25.09'
22	80'	17°57'55"	12.65'	25.08'

LOCATION 2
LAYOUT
SCALE: 1" = 50'

L-11

STATE OF CALIFORNIA - DEPARTMENT OF TRANSPORTATION
Caltrans
DESIGN
FUNCTIONAL SUPERVISOR: RON R. KRAEMER
CALCULATED-DESIGNED BY: AMJED HETTINI
CHECKED BY: MARK S. LEICHTFUSS
REVISED BY
DATE REVISED

LAST REVISION 5-24-12
DATE PLOTTED => 07-JAN-2013
TIME PLOTTED => 14:33

Dist	COUNTY	ROUTE	POST MILES TOTAL PROJECT	SHEET No.	TOTAL SHEETS
05	SB	166	0.9/2.4,3.8/4.8	15	84

Mark S. Leichtfuss 5-24-12
REGISTERED CIVIL ENGINEER DATE

7-30-12
PLANS APPROVAL DATE

REGISTERED PROFESSIONAL ENGINEER
MARK S. LEICHTFUSS
No. 69124
Exp. 6-30-12
CIVIL
STATE OF CALIFORNIA

THE STATE OF CALIFORNIA OR ITS OFFICERS OR AGENTS SHALL NOT BE RESPONSIBLE FOR THE ACCURACY OR COMPLETENESS OF SCANNED COPIES OF THIS PLAN SHEET.

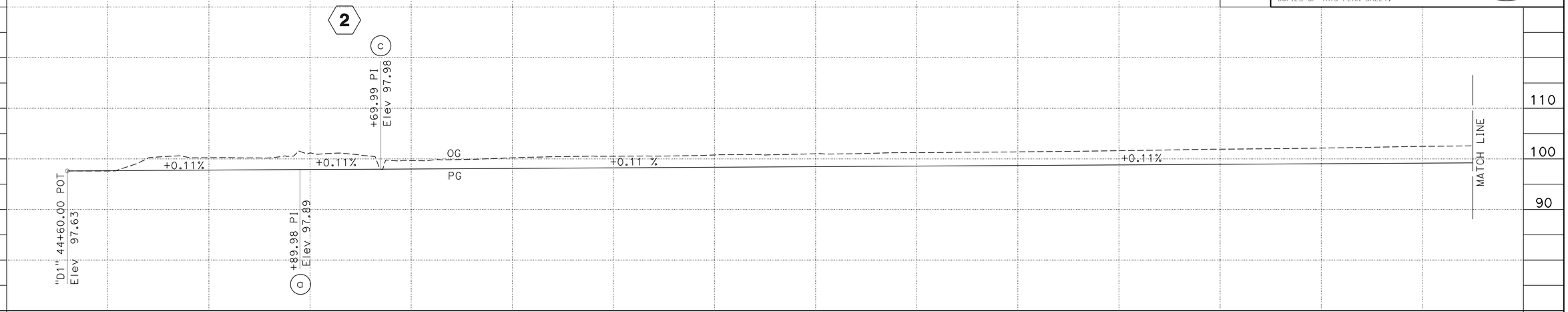

STATION		45+00	6	7	8	9	50+00	1	2	3	4	55+00	6	7	8	TOTAL
CY	Exc	1455														1454
	Emb	1416														1440

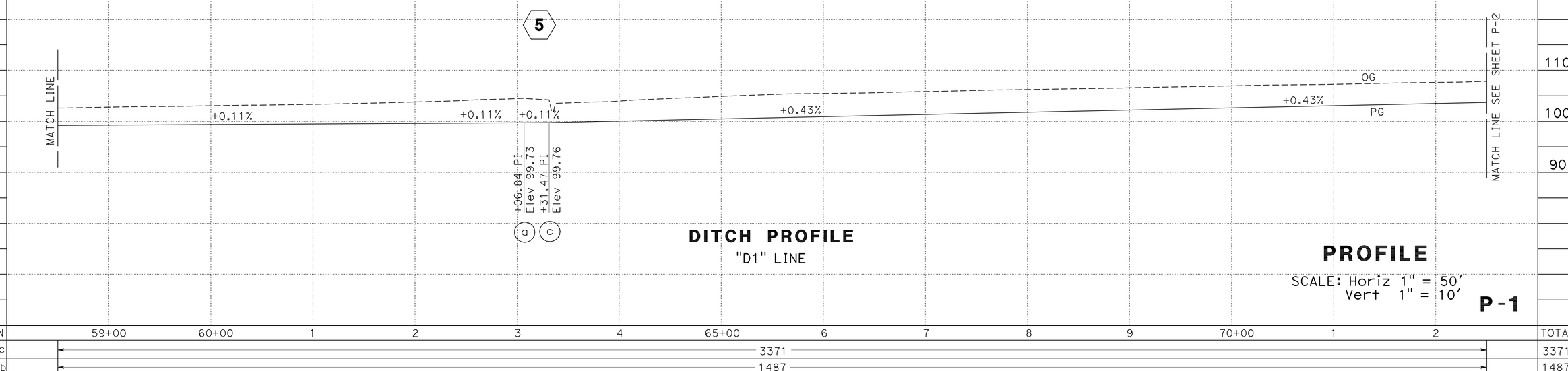

DITCH PROFILE
"D1" LINE

PROFILE
SCALE: Horiz 1" = 50'
Vert 1" = 10'

P-1

STATION		59+00	60+00	1	2	3	4	65+00	6	7	8	9	70+00	1	2	TOTAL
CY	Exc	3371														3371
	Emb	1487														1487

STATE OF CALIFORNIA - DEPARTMENT OF TRANSPORTATION
Caltrans® DESIGN

FUNCTIONAL SUPERVISOR: RON R. KRAEMER
CALCULATED-DESIGNED BY: QUAY CHESTER
CHECKED BY: MARK S. LEICHTFUSS
REVISED BY
DATE REVISED

LAST REVISION 5-24-12
DATE PLOTTED => 07-JAN-2013
TIME PLOTTED => 14:34

Dist	COUNTY	ROUTE	POST MILES TOTAL PROJECT	SHEET No.	TOTAL SHEETS
05	SB	166	0.9/2.4,3.8/4.8	16	84

Mark S. Leichtfuss 5-24-12
REGISTERED CIVIL ENGINEER DATE

7-30-12
PLANS APPROVAL DATE

REGISTERED PROFESSIONAL ENGINEER
MARK S. LEICHTFUSS
No. 69124
Exp. 6-30-12
CIVIL
STATE OF CALIFORNIA

THE STATE OF CALIFORNIA OR ITS OFFICERS OR AGENTS SHALL NOT BE RESPONSIBLE FOR THE ACCURACY OR COMPLETENESS OF SCANNED COPIES OF THIS PLAN SHEET.

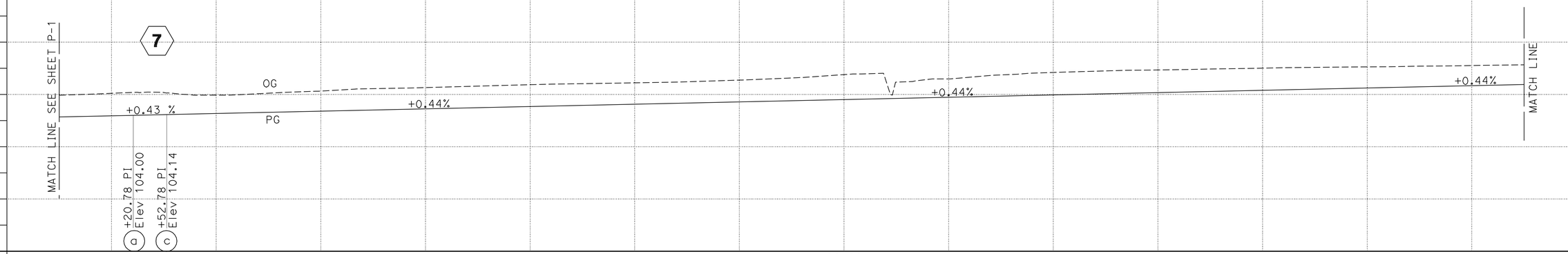

STATION		3	4	75+00	6	7	8	9	80+00	1	2	3	4	85+00	6	TOTAL
CY	Exc	2999														2999
	Emb	2075														2075

STATION		7	8	9	90+00	1	2	3	4	95+00	6	7	8	9	100+00	TOTAL
CY	Exc	2910														2910
	Emb	2004														2004

DITCH PROFILE
"D1" LINE

PROFILE
SCALE: Horiz 1" = 50'
Vert 1" = 10'

P-2

STATE OF CALIFORNIA - DEPARTMENT OF TRANSPORTATION
Caltrans® DESIGN

FUNCTIONAL SUPERVISOR: RON R. KRAEMER
CALCULATED-DESIGNED BY: MARK S. LEICHTFUSS
CHECKED BY
REVISED BY
DATE REVISED

LAST REVISION 5-24-12
DATE PLOTTED => 07-JAN-2013
TIME PLOTTED => 14:34

Dist	COUNTY	ROUTE	POST MILES TOTAL PROJECT	SHEET No.	TOTAL SHEETS
05	SB	166	0.9/2.4,3.8/4.8	17	84

Mark S. Leichtfuss 5-24-12
REGISTERED CIVIL ENGINEER DATE

7-30-12
PLANS APPROVAL DATE

REGISTERED PROFESSIONAL ENGINEER
MARK S. LEICHTFUSS
No. 69124
Exp. 6-30-12
CIVIL
STATE OF CALIFORNIA

THE STATE OF CALIFORNIA OR ITS OFFICERS OR AGENTS SHALL NOT BE RESPONSIBLE FOR THE ACCURACY OR COMPLETENESS OF SCANNED COPIES OF THIS PLAN SHEET.

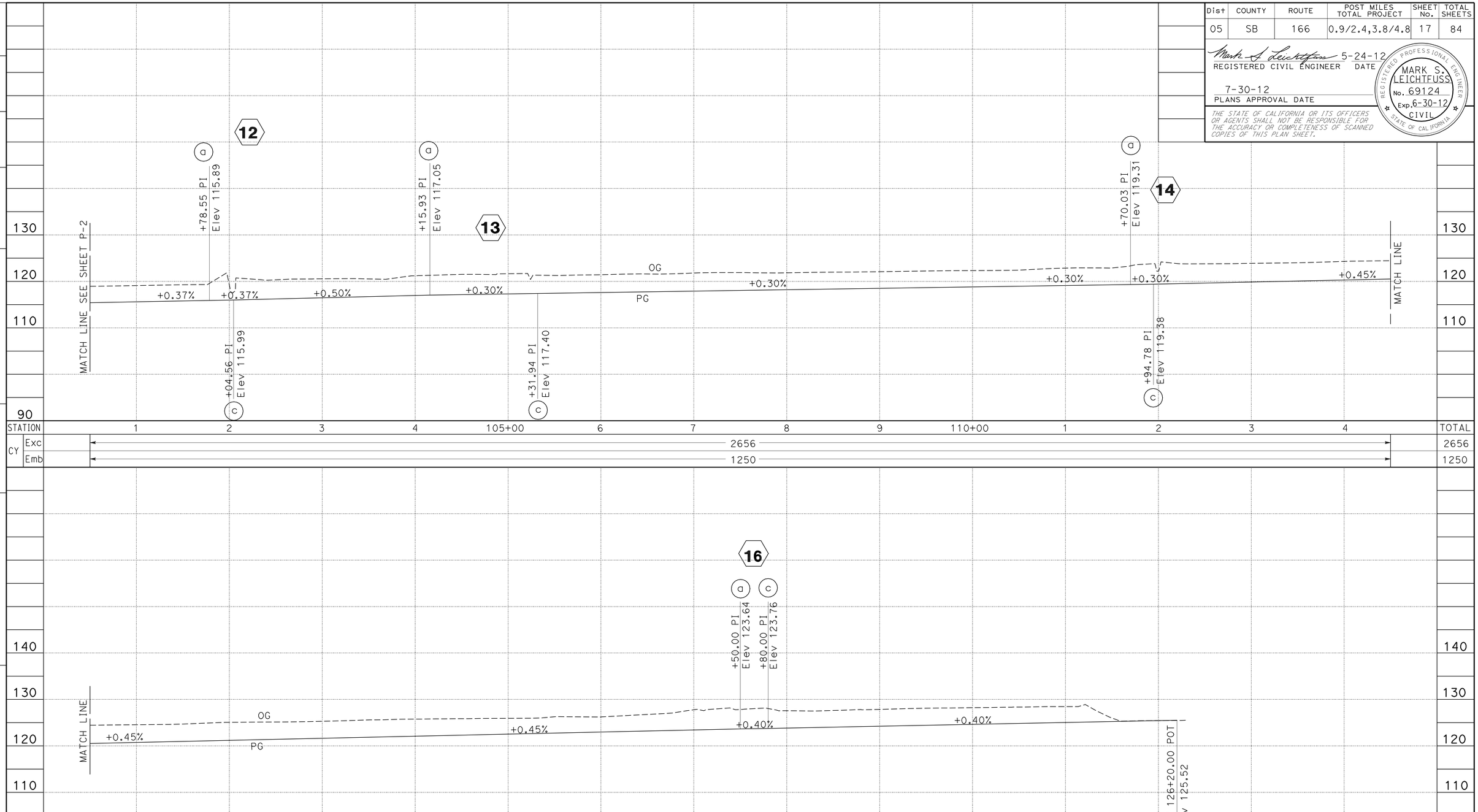

DITCH PROFILE
"D1" LINE

PROFILE
SCALE: Horiz 1" = 50'
Vert 1" = 10'

P-3

REVISED BY
DATE REVISED
QUAY CHESTER
MARK S. LEICHTFUSS
CALCULATED-DESIGNED BY
CHECKED BY
FUNCTIONAL SUPERVISOR
RON R. KRAEMER

STATE OF CALIFORNIA - DEPARTMENT OF TRANSPORTATION
Caltrans
DESIGN

LAST REVISION 5-24-12
DATE PLOTTED => 07-JAN-2013
TIME PLOTTED => 14:34

Dist	COUNTY	ROUTE	POST MILES TOTAL PROJECT	SHEET No.	TOTAL SHEETS
05	SB	166	0.9/2.4,3.8/4.8	18	84

Mark S. Leichtfuss 5-24-12
REGISTERED CIVIL ENGINEER DATE

7-30-12
PLANS APPROVAL DATE

REGISTERED PROFESSIONAL ENGINEER
MARK S. LEICHTFUSS
No. 69124
Exp. 6-30-12
CIVIL
STATE OF CALIFORNIA

THE STATE OF CALIFORNIA OR ITS OFFICERS OR AGENTS SHALL NOT BE RESPONSIBLE FOR THE ACCURACY OR COMPLETENESS OF SCANNED COPIES OF THIS PLAN SHEET.

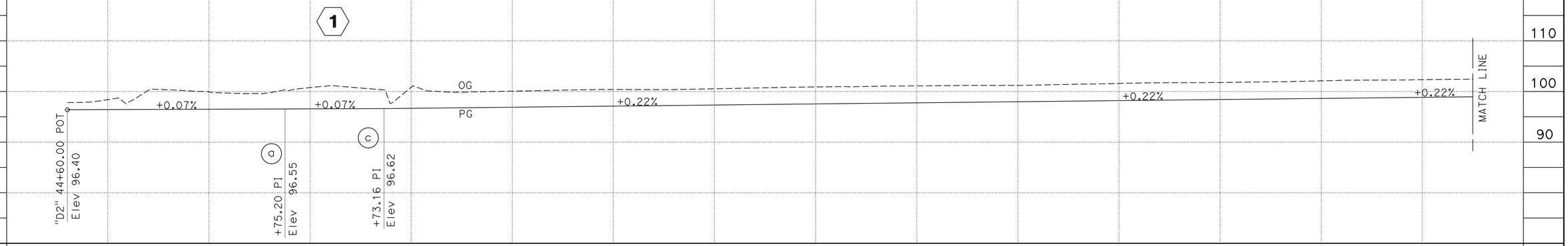

STATION		45+00	6	7	8	9	50+00	1	2	3	4	55+00	6	7	8	TOTAL
CY	Exc	1926														1846
	Emb	1062														999

STATION		9	60+00	1	2	3	4	65+00	6	7	8	9	70+00	1	2	TOTAL
CY	Exc	2438														2438
	Emb	1344														1344

DITCH PROFILE
"D2" LINE

PROFILE
SCALE: Horiz 1" = 50'
Vert 1" = 10'

P-4

REVISED BY | DATE REVISED
QUAY CHESTER | MARK S. LEICHTFUSS
CALCULATED-DESIGNED BY | CHECKED BY
FUNCTIONAL SUPERVISOR | RON R. KRAEMER
STATE OF CALIFORNIA - DEPARTMENT OF TRANSPORTATION
Caltrans® DESIGN

LAST REVISION 5-24-12
DATE PLOTTED => 07-JAN-2013
TIME PLOTTED => 14:34

Dist	COUNTY	ROUTE	POST MILES TOTAL PROJECT	SHEET No.	TOTAL SHEETS
05	SB	166	0.9/2.4,3.8/4.8	19	84

REGISTERED CIVIL ENGINEER 5-24-12 DATE

7-30-12
PLANS APPROVAL DATE

REGISTERED PROFESSIONAL ENGINEER MARK S. LEICHTFUSS No. 69124 Exp. 6-30-12 CIVIL STATE OF CALIFORNIA

THE STATE OF CALIFORNIA OR ITS OFFICERS OR AGENTS SHALL NOT BE RESPONSIBLE FOR THE ACCURACY OR COMPLETENESS OF SCANNED COPIES OF THIS PLAN SHEET.

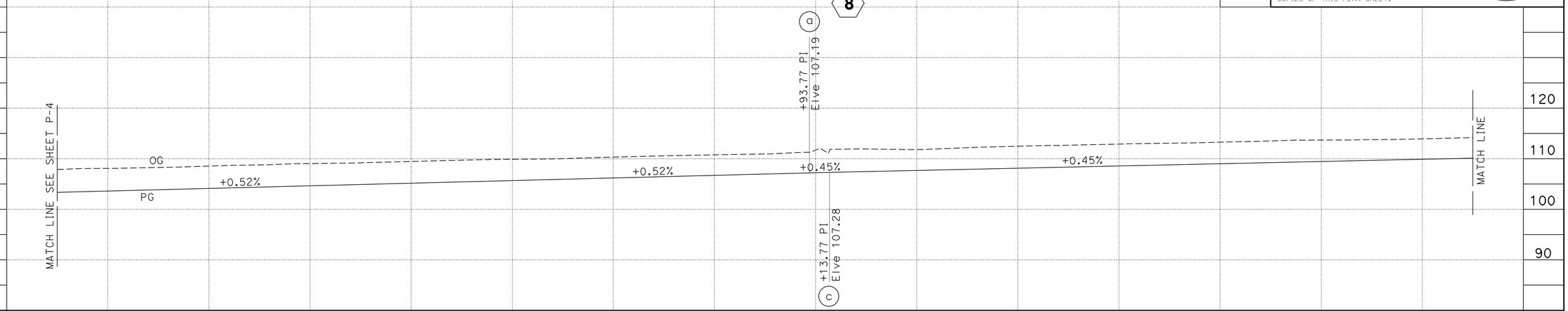

STATION		3	4	75+00	6	7	8	9	80+00	1	2	3	4	85+00	6	TOTAL
CY	Exc	3223														3223
	Emb	1105														1105

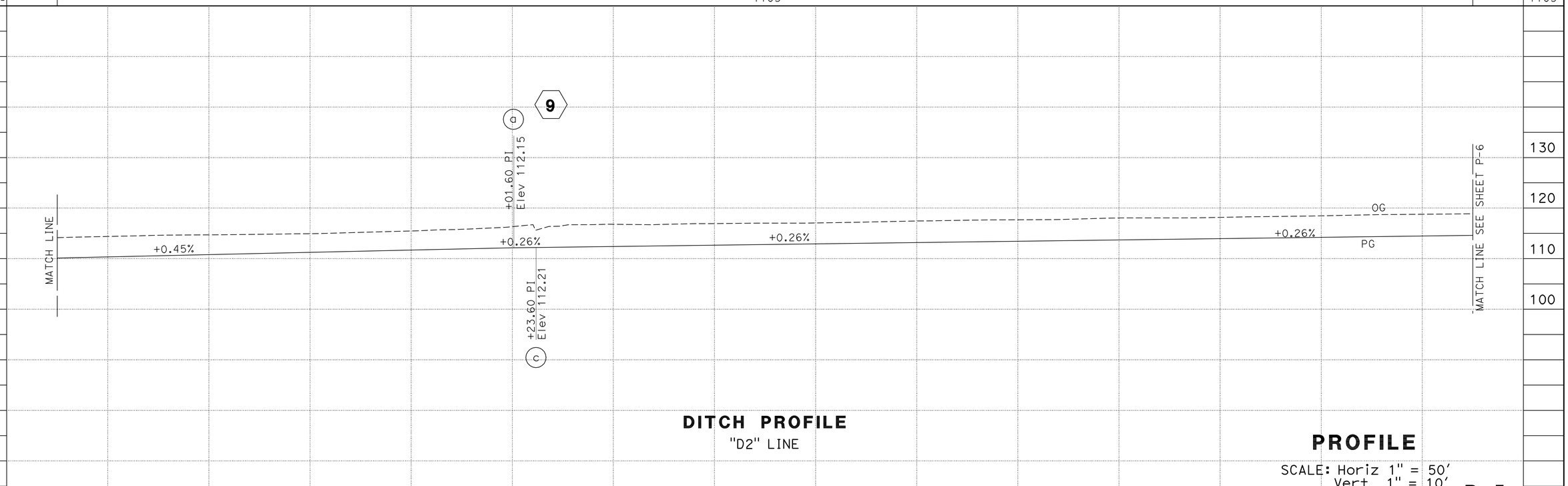

STATION		7	8	9	90+00	1	2	3	4	95+00	6	7	8	9	100+00	TOTAL
CY	Exc	3075														3075
	Emb	1230														1230

DITCH PROFILE
"D2" LINE

PROFILE
SCALE: Horiz 1" = 50'
Vert 1" = 10'

P-5

STATE OF CALIFORNIA - DEPARTMENT OF TRANSPORTATION
Caltrans® DESIGN

FUNCTIONAL SUPERVISOR: RON R. KRAEMER

QUAY CHESTER
MARK S. LEICHTFUSS

REVISED BY | DATE REVISED
CALCULATED-DESIGNED BY | CHECKED BY

LAST REVISION 5-24-12
DATE PLOTTED => 07-JAN-2013
TIME PLOTTED => 14:34

Dist	COUNTY	ROUTE	POST MILES TOTAL PROJECT	SHEET No.	TOTAL SHEETS
05	SB	166	0.9/2.4,3.8/4.8	20	84

Mark S. Leichtfuss 5-24-12
REGISTERED CIVIL ENGINEER DATE

7-30-12
PLANS APPROVAL DATE

REGISTERED PROFESSIONAL ENGINEER
MARK S. LEICHTFUSS
No. 69124
Exp. 6-30-12
CIVIL
STATE OF CALIFORNIA

THE STATE OF CALIFORNIA OR ITS OFFICERS OR AGENTS SHALL NOT BE RESPONSIBLE FOR THE ACCURACY OR COMPLETENESS OF SCANNED COPIES OF THIS PLAN SHEET.

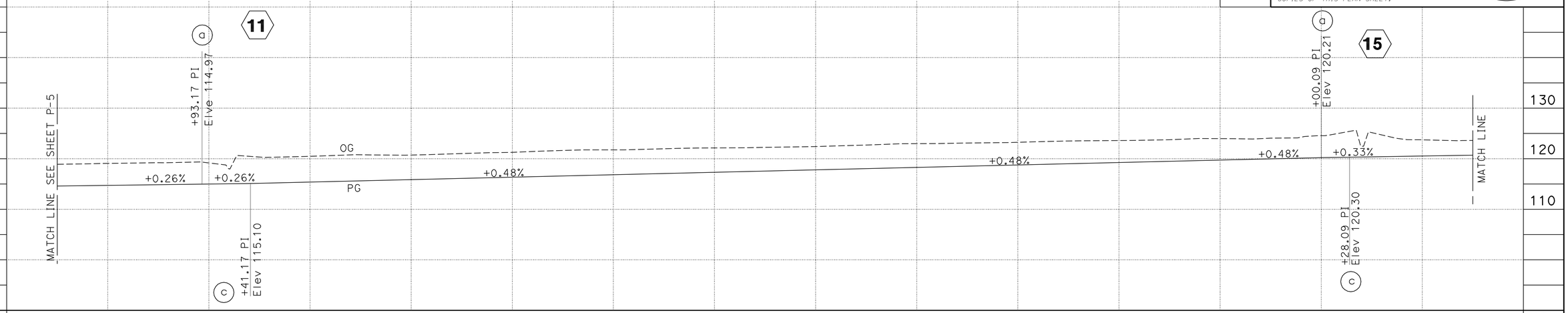

STATION		1	2	3	4	105+00	6	7	8	9	110+00	1	2	3	4	TOTAL
CY	Exc	3586														3586
	Emb	859														859

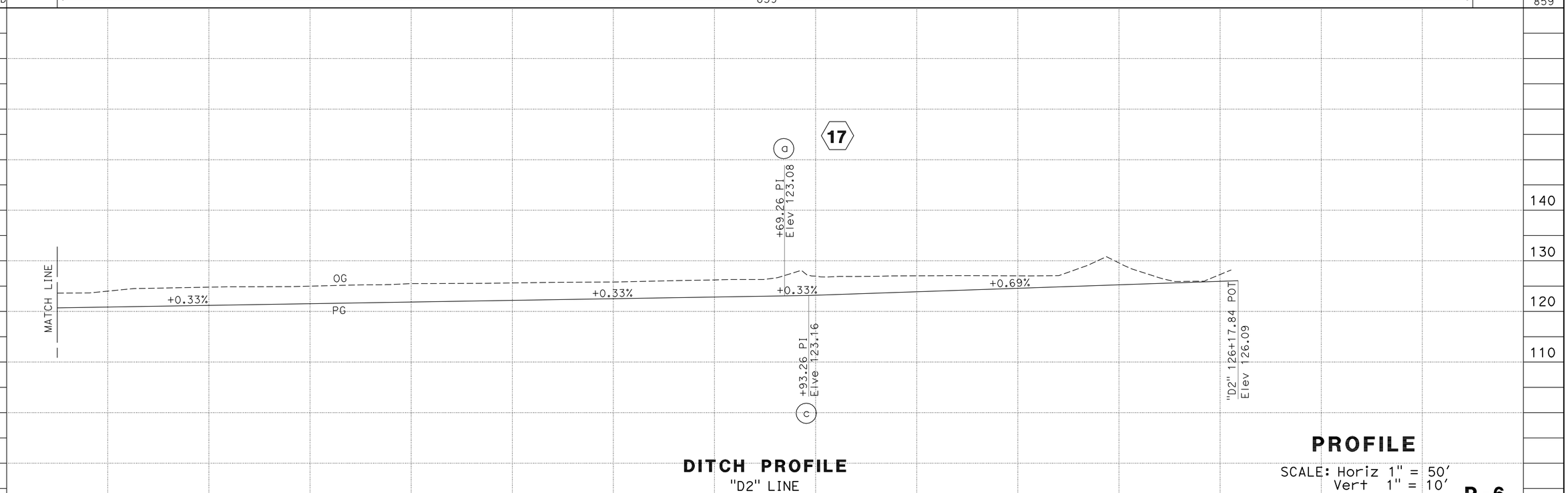

STATION		115+00	6	7	8	9	120+00	1	2	3	4	125+00	6	TOTAL
CY	Exc	1928												1935
	Emb	806												821

DITCH PROFILE
"D2" LINE

PROFILE
SCALE: Horiz 1" = 50'
Vert 1" = 10'

P-6

STATE OF CALIFORNIA - DEPARTMENT OF TRANSPORTATION
Caltrans
DESIGN

FUNCTIONAL SUPERVISOR: RON R. KRAEMER
CALCULATED-DESIGNED BY: MARK S. LEICHTFUSS
CHECKED BY
REVISED BY
DATE REVISED

LAST REVISION 5-24-12
DATE PLOTTED => 07-JAN-2013
TIME PLOTTED => 14:34

Dist	COUNTY	ROUTE	POST MILES TOTAL PROJECT	SHEET No.	TOTAL SHEETS
05	SB	166	0.9/2.4,3.8/4.8	21	84

Mark S. Leichtfuss 5-24-12
REGISTERED CIVIL ENGINEER DATE

7-30-12
PLANS APPROVAL DATE

REGISTERED PROFESSIONAL ENGINEER
MARK S. LEICHTFUSS
No. 69124
Exp. 6-30-12
CIVIL
STATE OF CALIFORNIA

THE STATE OF CALIFORNIA OR ITS OFFICERS OR AGENTS SHALL NOT BE RESPONSIBLE FOR THE ACCURACY OR COMPLETENESS OF SCANNED COPIES OF THIS PLAN SHEET.

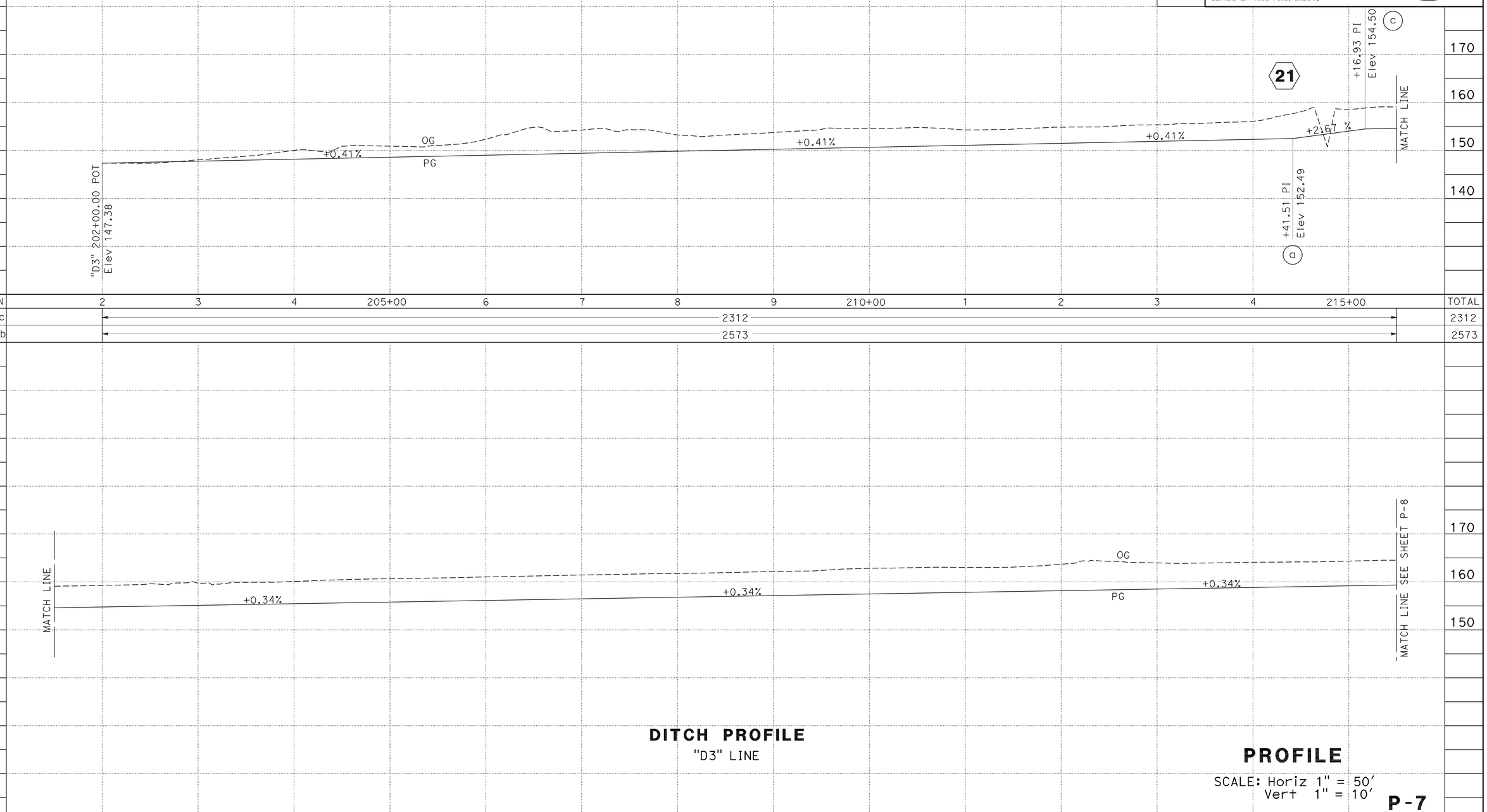

DITCH PROFILE
"D3" LINE

PROFILE
SCALE: Horiz 1" = 50'
Vert 1" = 10'

P-7

REVISED BY | DATE REVISED
QUAY CHESTER | MARK S. LEICHTFUSS
CALCULATED-DESIGNED BY | CHECKED BY
FUNCTIONAL SUPERVISOR | RON R. KRAEMER
STATE OF CALIFORNIA - DEPARTMENT OF TRANSPORTATION
Caltrans DESIGN

LAST REVISION 5-24-12
DATE PLOTTED => 07-JAN-2013
TIME PLOTTED => 14:34

Dist	COUNTY	ROUTE	POST MILES TOTAL PROJECT	SHEET No.	TOTAL SHEETS
05	SB	166	0.9/2.4,3.8/4.8	22	84

Mark S. Leichtfuss 5-24-12
REGISTERED CIVIL ENGINEER DATE

7-30-12
PLANS APPROVAL DATE

REGISTERED PROFESSIONAL ENGINEER
MARK S. LEICHTFUSS
No. 69124
Exp. 6-30-12
CIVIL
STATE OF CALIFORNIA

THE STATE OF CALIFORNIA OR ITS OFFICERS OR AGENTS SHALL NOT BE RESPONSIBLE FOR THE ACCURACY OR COMPLETENESS OF SCANNED COPIES OF THIS PLAN SHEET.

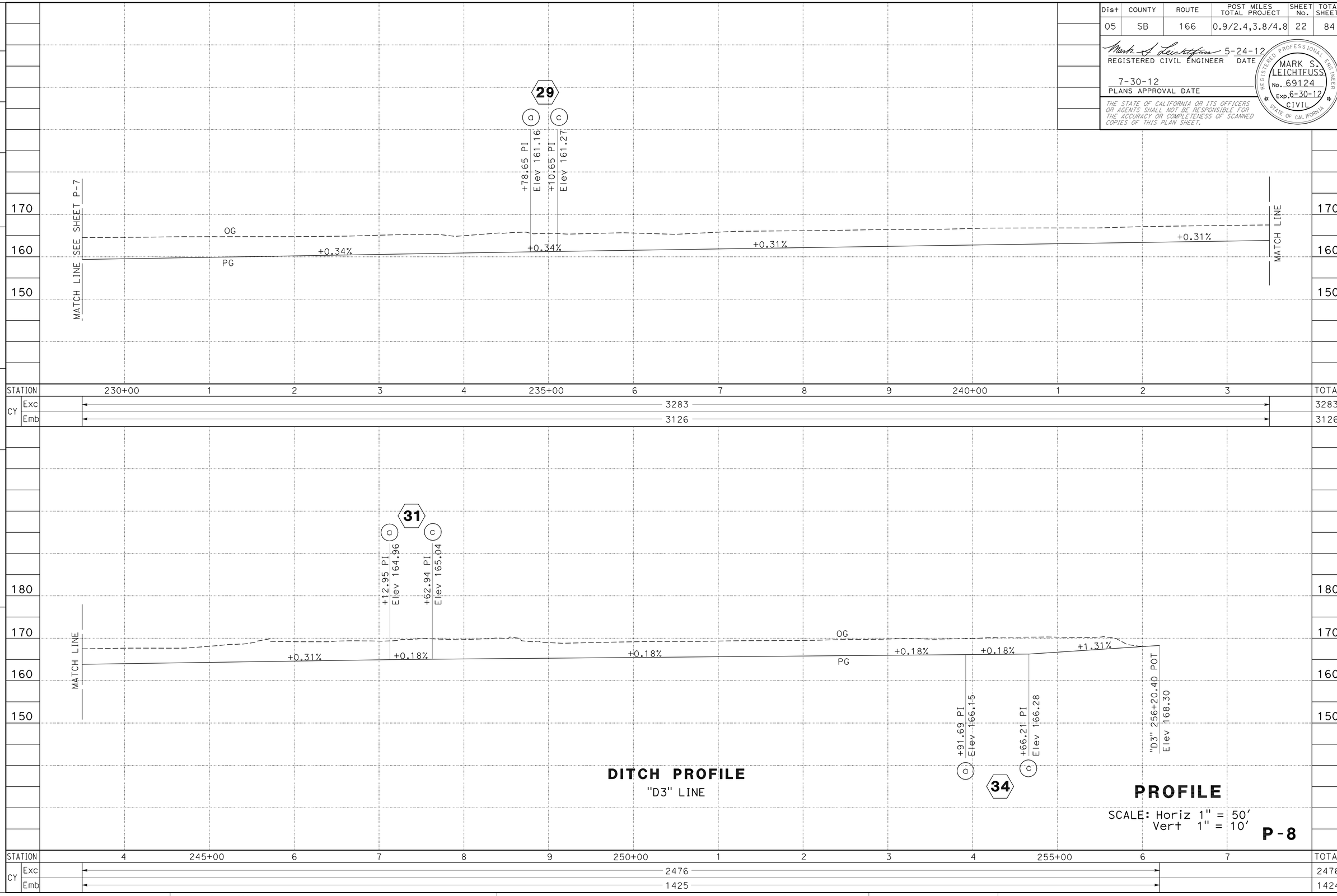

DITCH PROFILE
"D3" LINE

PROFILE
SCALE: Horiz 1" = 50'
Vert 1" = 10'

P-8

QUAY CHESTER
MARK S. LEICHTFUSS
RON R. KRAEMER
STATE OF CALIFORNIA - DEPARTMENT OF TRANSPORTATION
Caltrans
DESIGN

REVISED BY | DATE REVISED
CALCULATED-DESIGNED BY | CHECKED BY
FUNCTIONAL SUPERVISOR

LAST REVISION 5-24-12
DATE PLOTTED => 07-JAN-2013
TIME PLOTTED => 14:34

Dist	COUNTY	ROUTE	POST MILES TOTAL PROJECT	SHEET No.	TOTAL SHEETS
05	SB	166	0.9/2.4,3.8/4.8	23	84

Mark S. Leichtfuss 5-24-12
REGISTERED CIVIL ENGINEER DATE

7-30-12
PLANS APPROVAL DATE

REGISTERED PROFESSIONAL ENGINEER
MARK S. LEICHTFUSS
No. 69124
Exp. 6-30-12
CIVIL
STATE OF CALIFORNIA

THE STATE OF CALIFORNIA OR ITS OFFICERS OR AGENTS SHALL NOT BE RESPONSIBLE FOR THE ACCURACY OR COMPLETENESS OF SCANNED COPIES OF THIS PLAN SHEET.

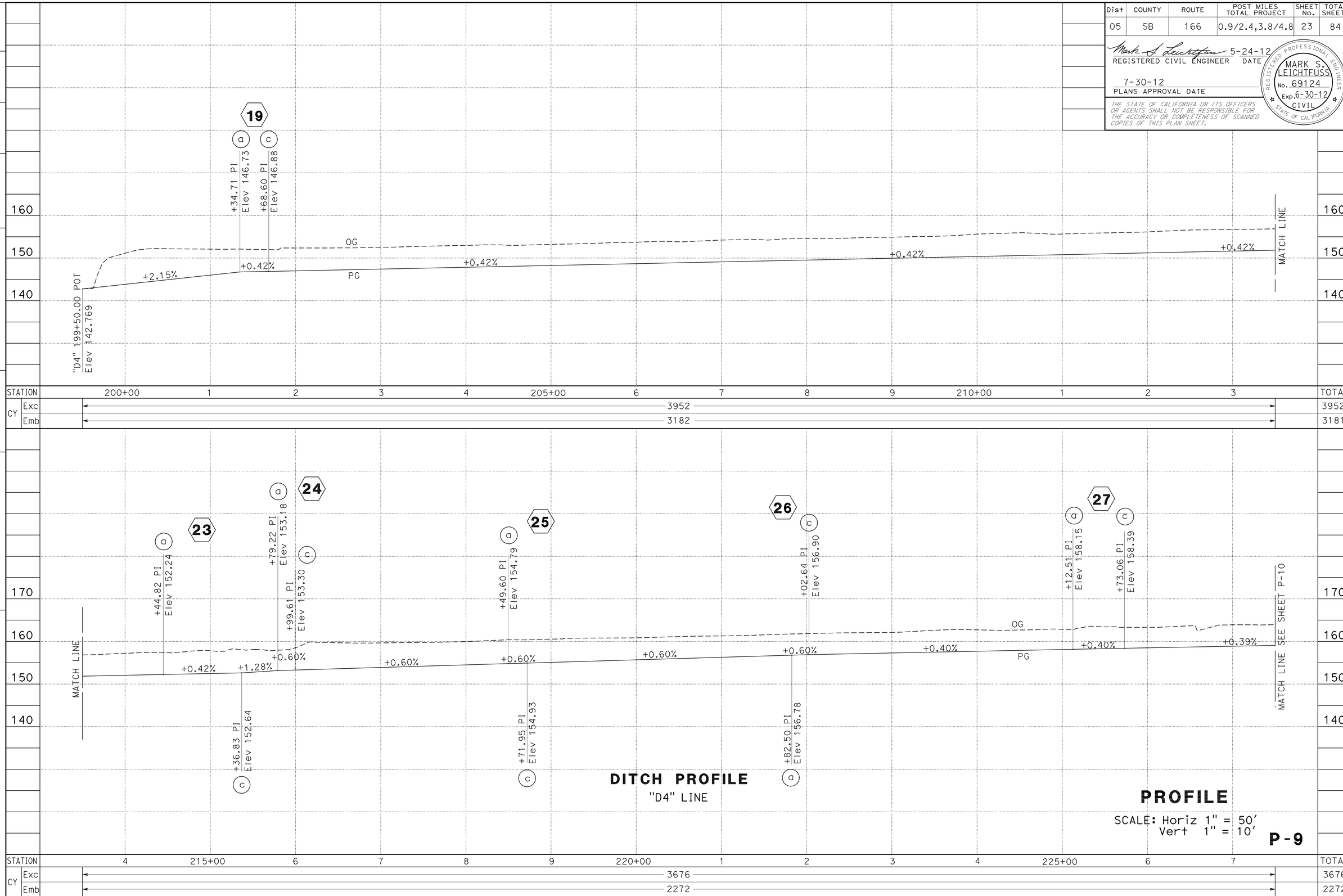

REVISED BY | DATE REVISED

QUAY CHESTER

MARK S. LEICHTFUSS

CALCULATED-DESIGNED BY | CHECKED BY

FUNCTIONAL SUPERVISOR

RON R. KRAEMER

STATE OF CALIFORNIA - DEPARTMENT OF TRANSPORTATION

Caltrans

DESIGN

LAST REVISION 5-24-12

DATE PLOTTED => 07-JAN-2013
TIME PLOTTED => 14:34

Dist	COUNTY	ROUTE	POST MILES TOTAL PROJECT	SHEET No.	TOTAL SHEETS
05	SB	166	0.9/2.4,3.8/4.8	24	84

REGISTERED CIVIL ENGINEER 5-24-12 DATE

7-30-12
PLANS APPROVAL DATE

REGISTERED PROFESSIONAL ENGINEER MARK S. LEICHTFUSS No. 69124 Exp. 6-30-12 CIVIL STATE OF CALIFORNIA

THE STATE OF CALIFORNIA OR ITS OFFICERS OR AGENTS SHALL NOT BE RESPONSIBLE FOR THE ACCURACY OR COMPLETENESS OF SCANNED COPIES OF THIS PLAN SHEET.

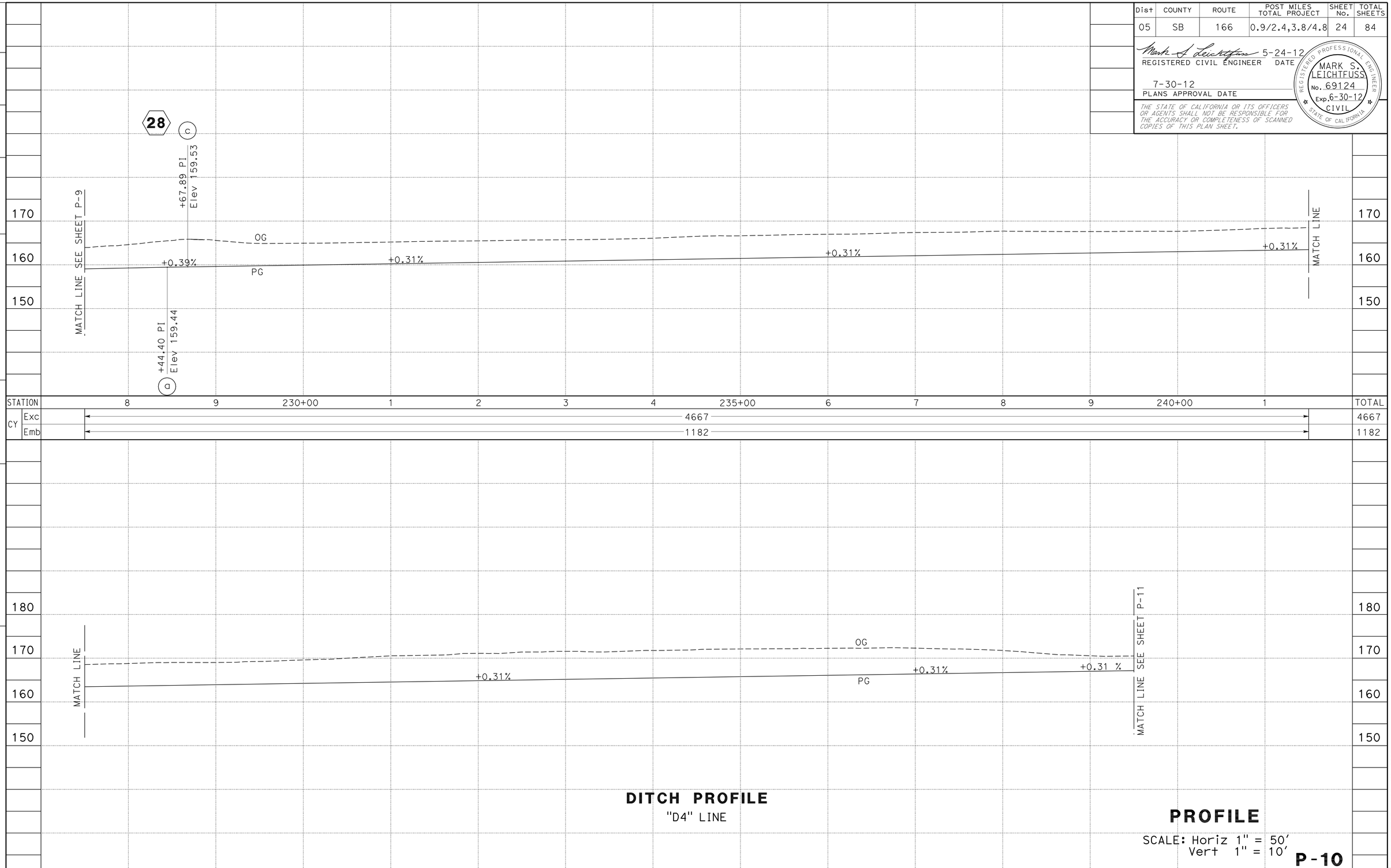

DITCH PROFILE
"D4" LINE

PROFILE
SCALE: Horiz 1" = 50'
Vert 1" = 10'

P-10

STATE OF CALIFORNIA - DEPARTMENT OF TRANSPORTATION
Caltrans® DESIGN

FUNCTIONAL SUPERVISOR: RON R. KRAEMER

CALCULATED-DESIGNED BY: MARK S. LEICHTFUSS
CHECKED BY

QUAY CHESTER

REVISED BY | DATE REVISED

LAST REVISION 5-24-12
DATE PLOTTED => 07-JAN-2013
TIME PLOTTED => 14:34

Dist	COUNTY	ROUTE	POST MILES TOTAL PROJECT	SHEET No.	TOTAL SHEETS
05	SB	166	0.9/2.4,3.8/4.8	25	84

REGISTERED CIVIL ENGINEER 5-24-12 DATE

7-30-12
PLANS APPROVAL DATE

REGISTERED PROFESSIONAL ENGINEER MARK S. LEICHTFUSS No. 69124 Exp. 6-30-12 CIVIL STATE OF CALIFORNIA

THE STATE OF CALIFORNIA OR ITS OFFICERS OR AGENTS SHALL NOT BE RESPONSIBLE FOR THE ACCURACY OR COMPLETENESS OF SCANNED COPIES OF THIS PLAN SHEET.

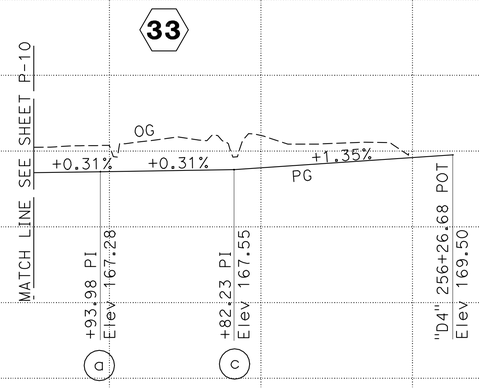

STATION		4	255+00	6	7	TOTAL
CY	Exc		253			253
	Emb		266			266

STATION						TOTAL
CY	Exc					
	Emb					

DITCH PROFILE

"D4" LINE

PROFILE

SCALE: Horiz 1" = 50'
Vert 1" = 10'

P-11

STATE OF CALIFORNIA - DEPARTMENT OF TRANSPORTATION
Caltrans® DESIGN

FUNCTIONAL SUPERVISOR: RON R. KRAEMER

CALCULATED-DESIGNED BY / CHECKED BY

REVISED BY / DATE REVISED: MARK S. LEICHTFUSS

LAST REVISION 5-24-12 | DATE PLOTTED => 07-JAN-2013 | TIME PLOTTED => 14:34

Dist	COUNTY	ROUTE	POST MILES TOTAL PROJECT	SHEET No.	TOTAL SHEETS
05	SB	166	0.9/2.4,3.8/4.8	26	84

Mark S. Leichtfuss 5-24-12
REGISTERED CIVIL ENGINEER DATE

7-30-12
PLANS APPROVAL DATE

REGISTERED PROFESSIONAL ENGINEER MARK S. LEICHTFUSS No. 69124 Exp. 6-30-12 CIVIL STATE OF CALIFORNIA

THE STATE OF CALIFORNIA OR ITS OFFICERS OR AGENTS SHALL NOT BE RESPONSIBLE FOR THE ACCURACY OR COMPLETENESS OF SCANNED COPIES OF THIS PLAN SHEET.

NOTE:

FOR ACCURATE RIGHT OF WAY DATA, CONTACT RIGHT OF WAY ENGINEERING AT THE DISTRICT OFFICE.

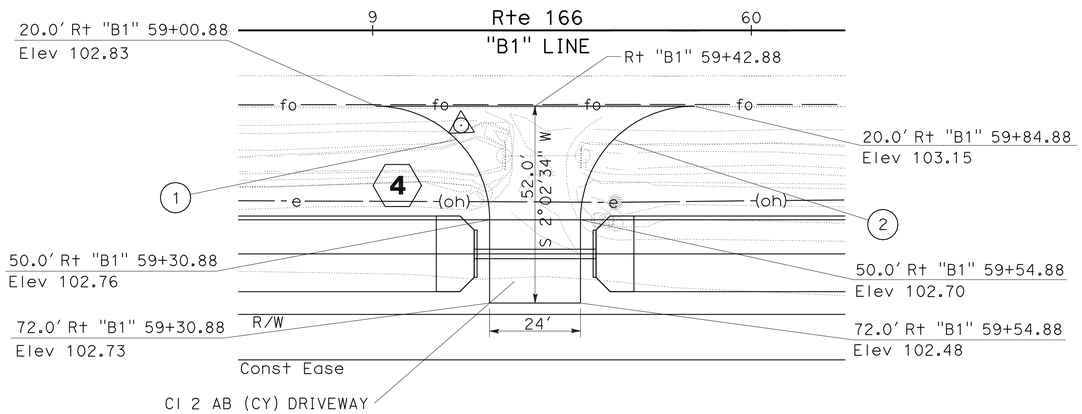

DRIVEWAY ENTRANCE
"B1" 59+42.88

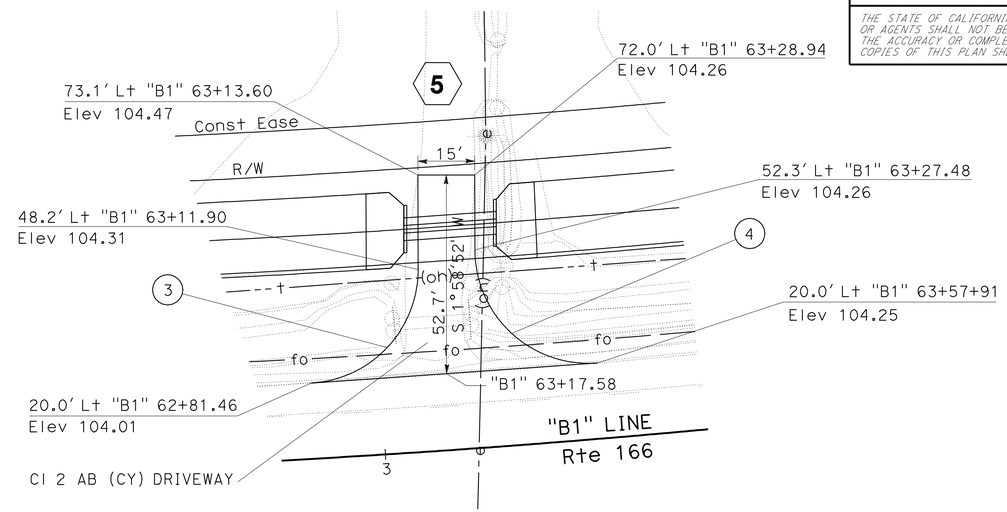

DRIVEWAY ENTRANCE
"B1" 63+17.58

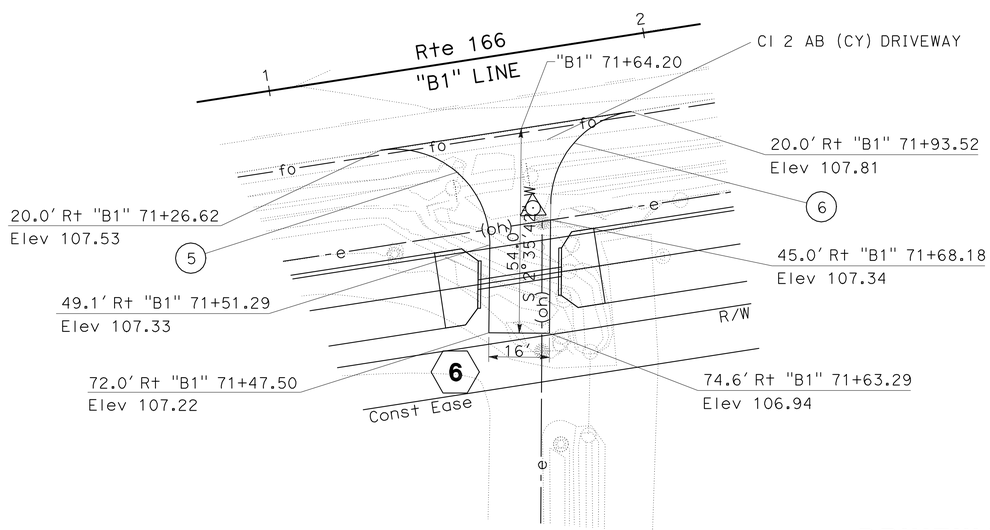

DRIVEWAY ENTRANCE
"B1" 71+64.20

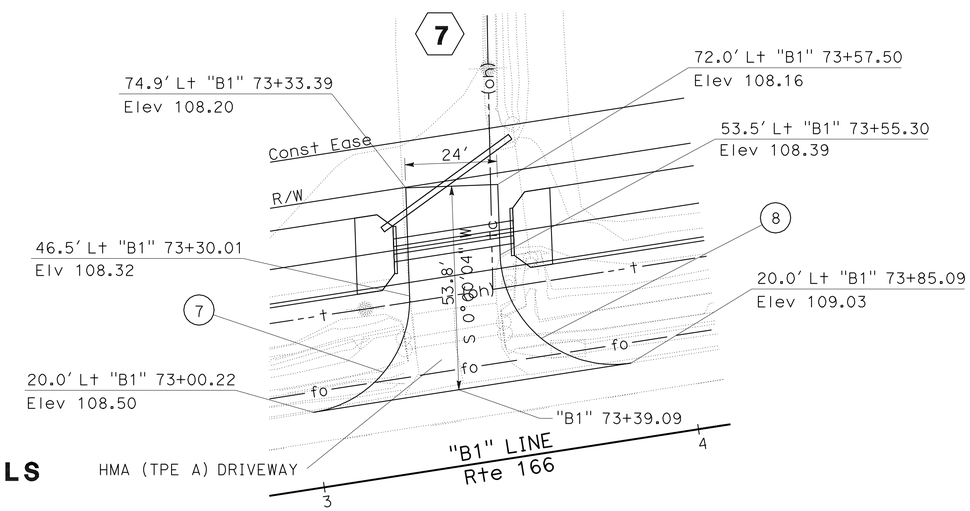

DRIVEWAY ENTRANCE
"B1" 73+39.09

DRIVEWAY ALIGNMENT DETAILS

CURVE DATA

No. (#)	R	Δ	T	L
1	30′	90°0′31"	30.00′	47.13′
2	30′	89°59′29"	30.00′	47.12′
3	30′	86°45′28"	28.35′	45.43′
4	30′	94°42′09"	32.57′	49.59′
5	25′	99°22′37"	29.47′	43.36′
6	25′	80°37′23"	21.21′	35.18′
7	30′	83°13′03"	26.64′	43.57′
8	30′	96°46′57"	33.78′	50.68′

APPROVED FOR DRIVEWAY WORK ONLY

CONSTRUCTION DETAILS
SCALE: 1" = 20′

C-1

STATE OF CALIFORNIA - DEPARTMENT OF TRANSPORTATION
DESIGN
Caltrans
FUNCTIONAL SUPERVISOR: RON R. KRAEMER
CALCULATED-DESIGNED BY: AMJED HETTINI
CHECKED BY: MARK S. LEICHTFUSS
REVISED BY
DATE REVISED

LAST REVISION 5-24-12
DATE PLOTTED => 07-JAN-2013
TIME PLOTTED => 14:34

Dist	COUNTY	ROUTE	POST MILES TOTAL PROJECT	SHEET No.	TOTAL SHEETS
05	SB	166	0.9/2.4,3.8/4.8	27	84

REGISTERED CIVIL ENGINEER 5-24-12 DATE

7-30-12
PLANS APPROVAL DATE

REGISTERED PROFESSIONAL ENGINEER MARK S. LEICHTFUSS No. 69124 Exp. 6-30-12 CIVIL STATE OF CALIFORNIA

THE STATE OF CALIFORNIA OR ITS OFFICERS OR AGENTS SHALL NOT BE RESPONSIBLE FOR THE ACCURACY OR COMPLETENESS OF SCANNED COPIES OF THIS PLAN SHEET.

NOTE:

FOR ACCURATE RIGHT OF WAY DATA, CONTACT RIGHT OF WAY ENGINEERING AT THE DISTRICT OFFICE.

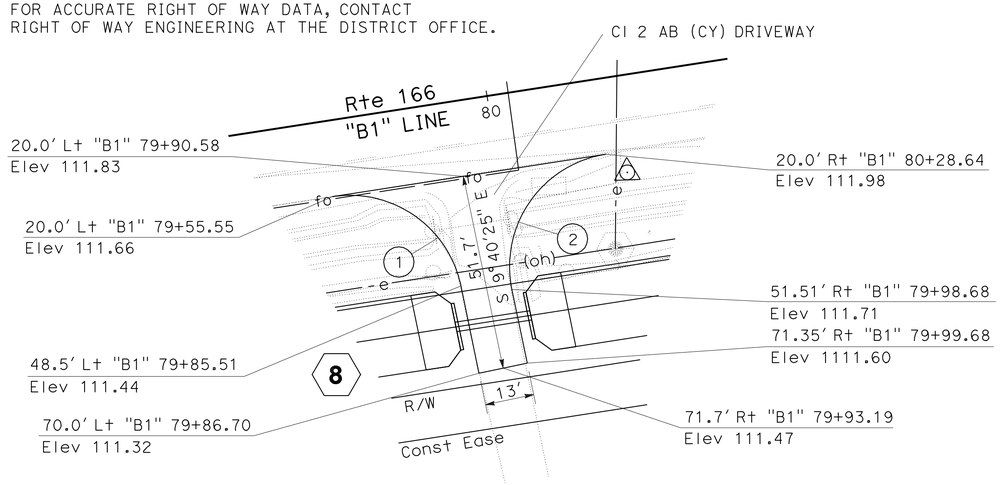

DRIVEWAY ENTRANCE
"B1" 79+90.58

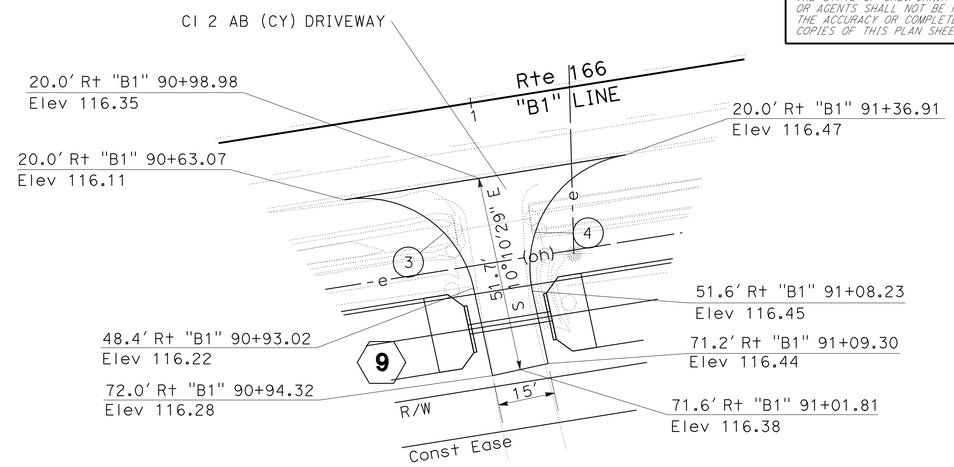

DRIVEWAY ENTRANCE
"B1" 90+98.98

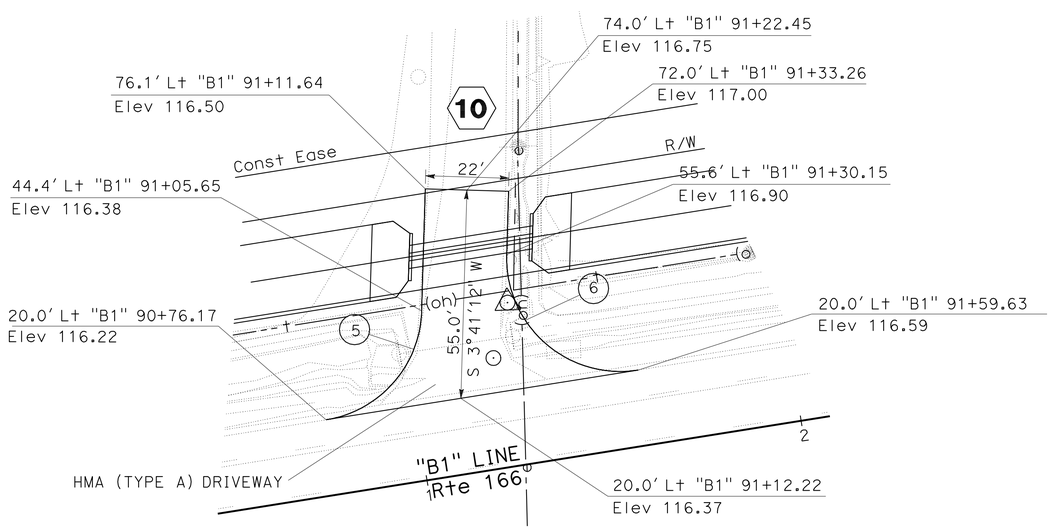

DRIVEWAY ENTRANCE
"B1" 91+12.22

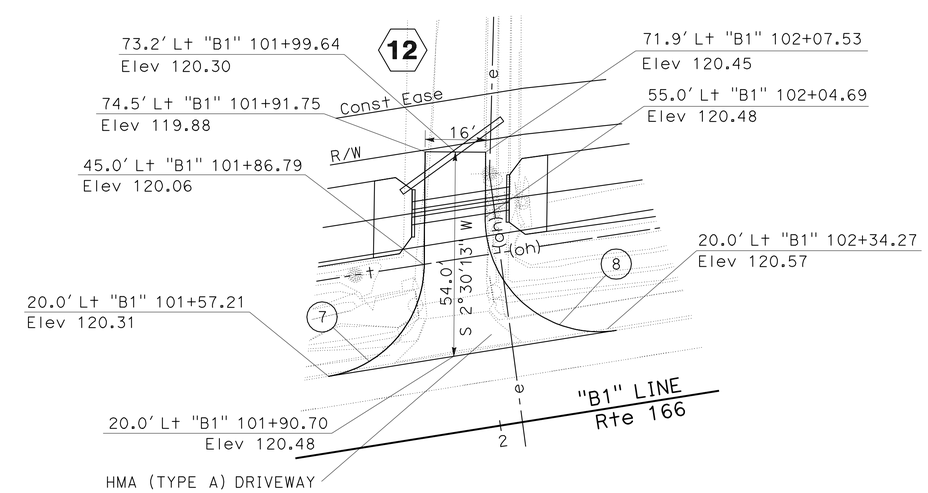

DRIVEWAY ENTRANCE
"B1" 101+90.70

CURVE DATA

No. ⊕	R	Δ	T	L
1	30'	87°6'32"	28.52'	45.61'
2	30'	92°53'28"	31.55'	48.64'
3	30'	86°51'26"	28.40'	45.48'
4	30'	93°8'34"	31.69'	48.77'
5	30'	79°16'56"	24.85'	41.51'
6	30'	100°43'04"	36.21'	52.74'
7	30'	80°27'50"	25.38'	42.13'
8	30'	99°32'10"	35.46'	52.12'

APPROVED FOR DRIVEWAY WORK ONLY

DRIVEWAY ALIGNMENT DETAILS

CONSTRUCTION DETAILS
SCALE: 1" = 20'

C-2

STATE OF CALIFORNIA - DEPARTMENT OF TRANSPORTATION
Caltrans® DESIGN

FUNCTIONAL SUPERVISOR: RON R. KRAEMER
MARK S. LEICHTFUSS
AMJED HETTINI
CALCULATED-DESIGNED BY
CHECKED BY
REVISED BY
DATE REVISED

LAST REVISION 5-24-12
DATE PLOTTED => 07-JAN-2013
TIME PLOTTED => 14:34

Dist	COUNTY	ROUTE	POST MILES TOTAL PROJECT	SHEET No.	TOTAL SHEETS
05	SB	166	0.9/2.4,3.8/4.8	28	84

Mark S. Leichtfuss 5-24-12
REGISTERED CIVIL ENGINEER DATE

7-30-12
PLANS APPROVAL DATE

REGISTERED PROFESSIONAL ENGINEER MARK S. LEICHTFUSS No. 69124 Exp. 6-30-12 CIVIL STATE OF CALIFORNIA

THE STATE OF CALIFORNIA OR ITS OFFICERS OR AGENTS SHALL NOT BE RESPONSIBLE FOR THE ACCURACY OR COMPLETENESS OF SCANNED COPIES OF THIS PLAN SHEET.

NOTE:

FOR ACCURATE RIGHT OF WAY DATA, CONTACT RIGHT OF WAY ENGINEERING AT THE DISTRICT OFFICE.

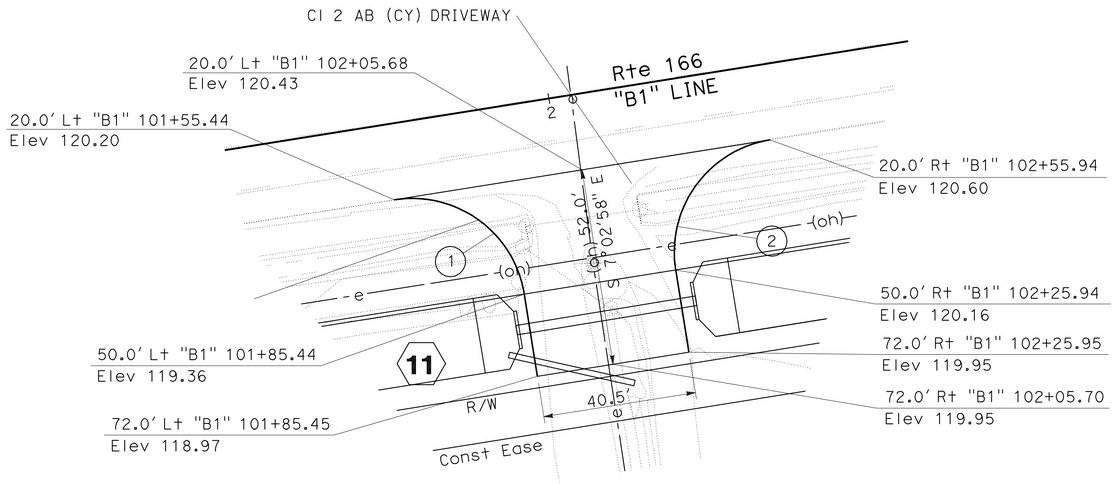

DRIVEWAY ENTRANCE
"B1" 102+05.68

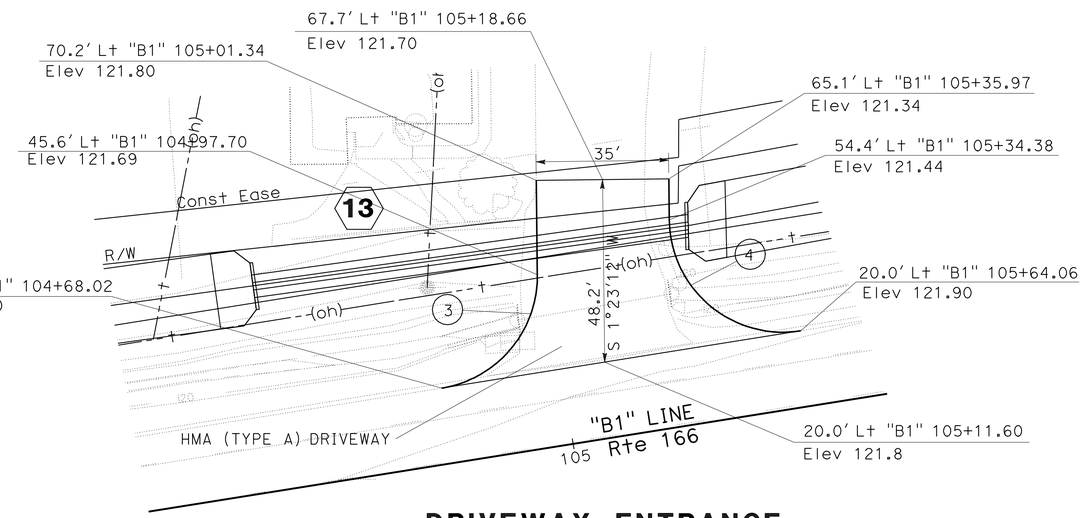

DRIVEWAY ENTRANCE
"B1" 105+11.60

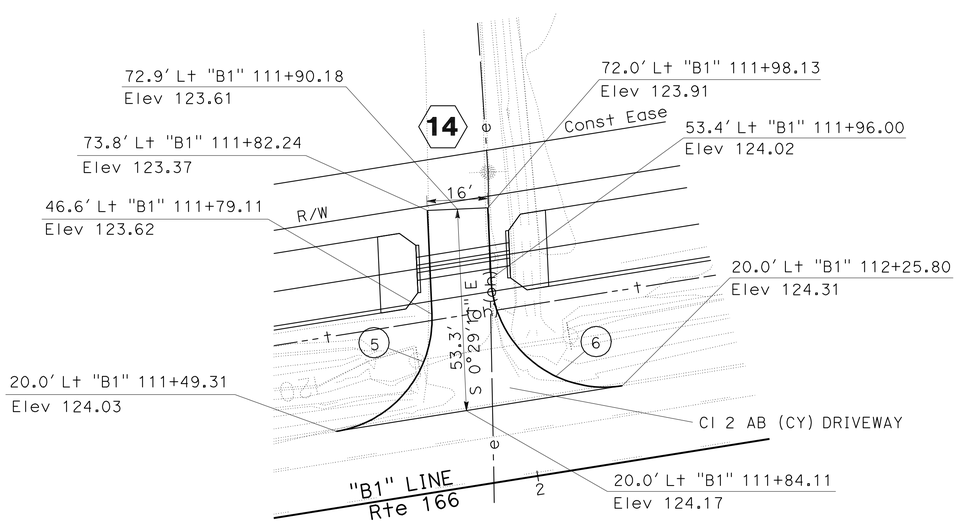

DRIVEWAY ENTRANCE
"B1" 111+84.11

CURVE DATA

No.	R	Δ	T	L
1	30'	89°58'54"	29.99'	47.11'
2	30'	90°1'06"	30.01'	47.13'
3	30'	81°34'49"	25.89'	42.72'
4	30'	98°25'11"	34.77'	51.53'
5	30'	83°27'14"	26.75'	43.70'
6	30'	96°32'46"	33.64'	50.55'

DRIVEWAY ALIGNMENT DETAILS

APPROVED FOR DRIVEWAY WORK ONLY

CONSTRUCTION DETAILS
SCALE: 1" = 20'

C-3

STATE OF CALIFORNIA - DEPARTMENT OF TRANSPORTATION
Caltrans
DESIGN

FUNCTIONAL SUPERVISOR: RON R. KRAEMER
CALCULATED-DESIGNED BY: AMJED HETTINI
CHECKED BY: MARK S. LEICHTFUSS
REVISED BY
DATE REVISED

LAST REVISION 5-24-12
DATE PLOTTED => 07-JAN-2013
TIME PLOTTED => 14:34

Dist	COUNTY	ROUTE	POST MILES TOTAL PROJECT	SHEET No.	TOTAL SHEETS
05	SB	166	0.9/2.4,3.8/4.8	29	84

Mark S. Leichtfuss 5-24-12
REGISTERED CIVIL ENGINEER DATE

7-30-12
PLANS APPROVAL DATE

REGISTERED PROFESSIONAL ENGINEER MARK S. LEICHTFUSS No. 69124 Exp. 6-30-12 CIVIL STATE OF CALIFORNIA

THE STATE OF CALIFORNIA OR ITS OFFICERS OR AGENTS SHALL NOT BE RESPONSIBLE FOR THE ACCURACY OR COMPLETENESS OF SCANNED COPIES OF THIS PLAN SHEET.

NOTE:

FOR ACCURATE RIGHT OF WAY DATA, CONTACT RIGHT OF WAY ENGINEERING AT THE DISTRICT OFFICE.

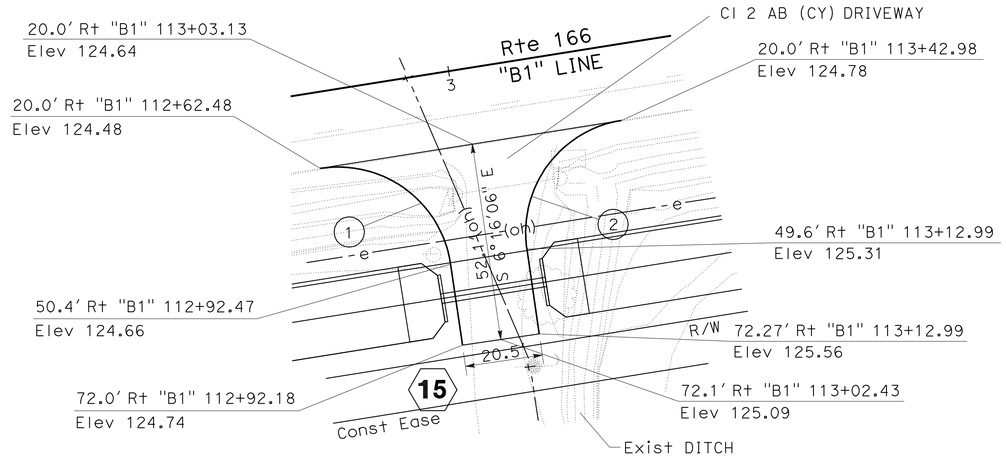

DRIVEWAY ENTRANCE
"B1" 113+03.13

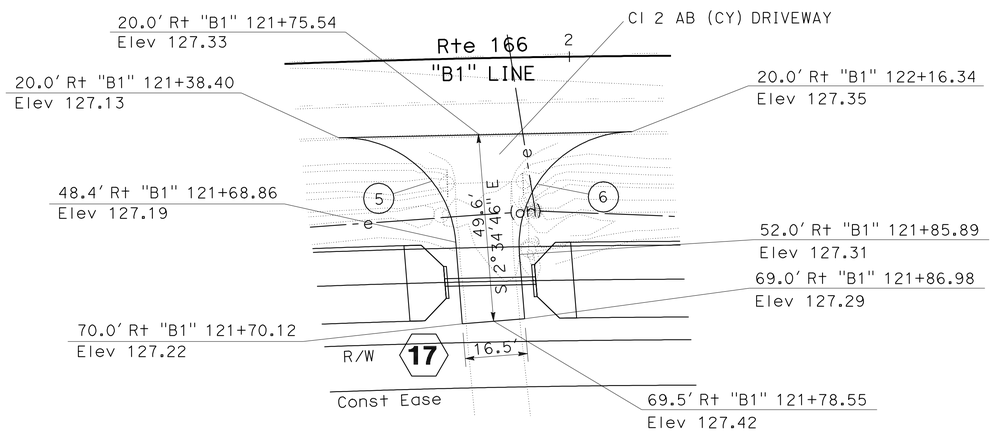

DRIVEWAY ENTRANCE
"B1" 121+75.54

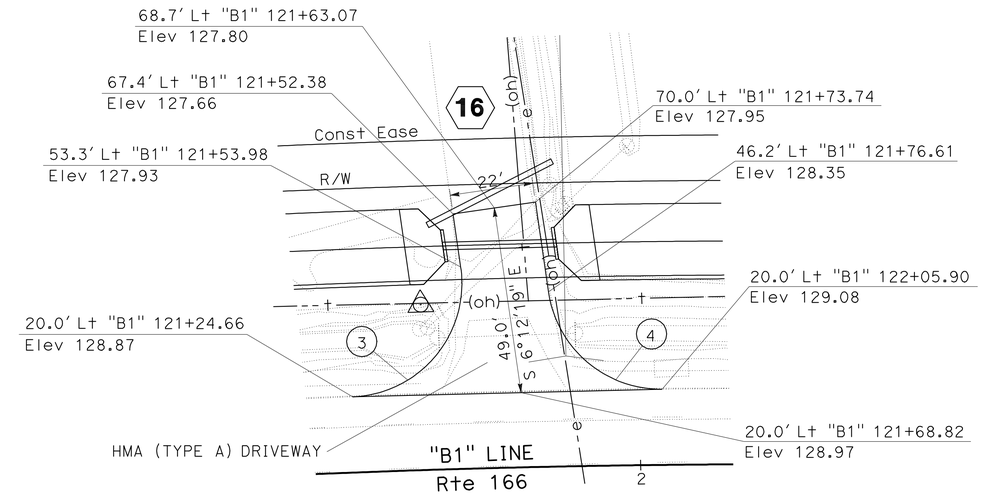

DRIVEWAY ENTRANCE
"B1" 121+68.82

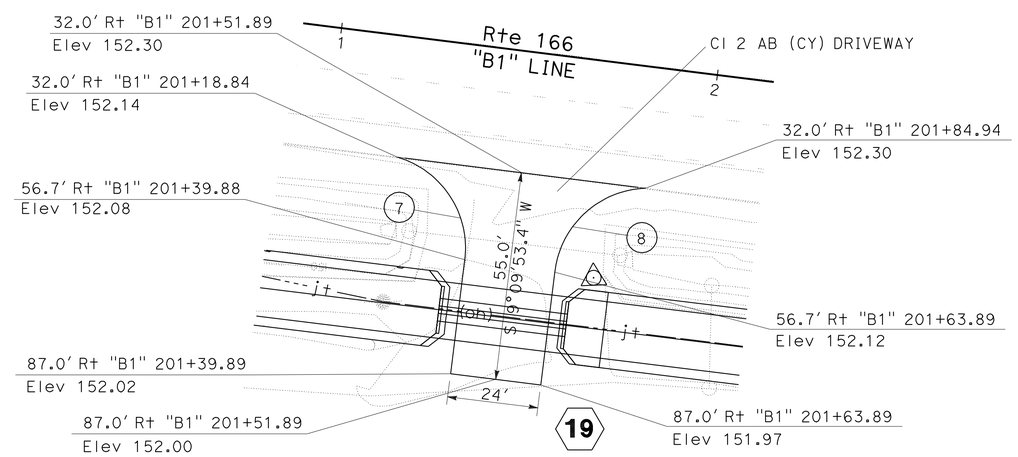

DRIVEWAY ENTRANCE
"B1" 201+51.89

CURVE DATA

No. ⊛	R	Δ	T	L
1	30'	90°45'49"	30.40'	47.52'
2	30'	89°14'11"	29.60'	46.72'
3	30'	96°3'03"	33.35'	50.29'
4	30'	82°23'52"	26.26'	43.14'
5	30'	87°18'43"	28.62'	45.72'
6	30'	94°10'35"	32.27'	49.31'
7	25'	80°54'35"	21.32'	35.30'
8	25'	80°54'35"	21.32'	35.30'

APPROVED FOR DRIVEWAY WORK ONLY

DRIVEWAY ALIGNMENT DETAILS

CONSTRUCTION DETAILS
SCALE: 1" = 20'

C-4

STATE OF CALIFORNIA - DEPARTMENT OF TRANSPORTATION
Caltrans® DESIGN

FUNCTIONAL SUPERVISOR: RON R. KRAEMER
CALCULATED-DESIGNED BY: MARK S. LEICHTFUSS
CHECKED BY: AMJED HETTINI
REVISED BY
DATE REVISED

LAST REVISION 5-24-12
DATE PLOTTED => 07-JAN-2013
TIME PLOTTED => 14:34

Dist	COUNTY	ROUTE	POST MILES TOTAL PROJECT	SHEET No.	TOTAL SHEETS
05	SB	166	0.9/2.4,3.8/4.8	30	84

REGISTERED CIVIL ENGINEER 5-24-12 DATE

7-30-12
PLANS APPROVAL DATE

REGISTERED PROFESSIONAL ENGINEER MARK S. LEICHTFUSS No. 69124 Exp. 6-30-12 CIVIL STATE OF CALIFORNIA

THE STATE OF CALIFORNIA OR ITS OFFICERS OR AGENTS SHALL NOT BE RESPONSIBLE FOR THE ACCURACY OR COMPLETENESS OF SCANNED COPIES OF THIS PLAN SHEET.

NOTE:

FOR ACCURATE RIGHT OF WAY AND ACCESS DATA, CONTACT RIGHT OF WAY ENGINEERING AT THE DISTRICT OFFICE.

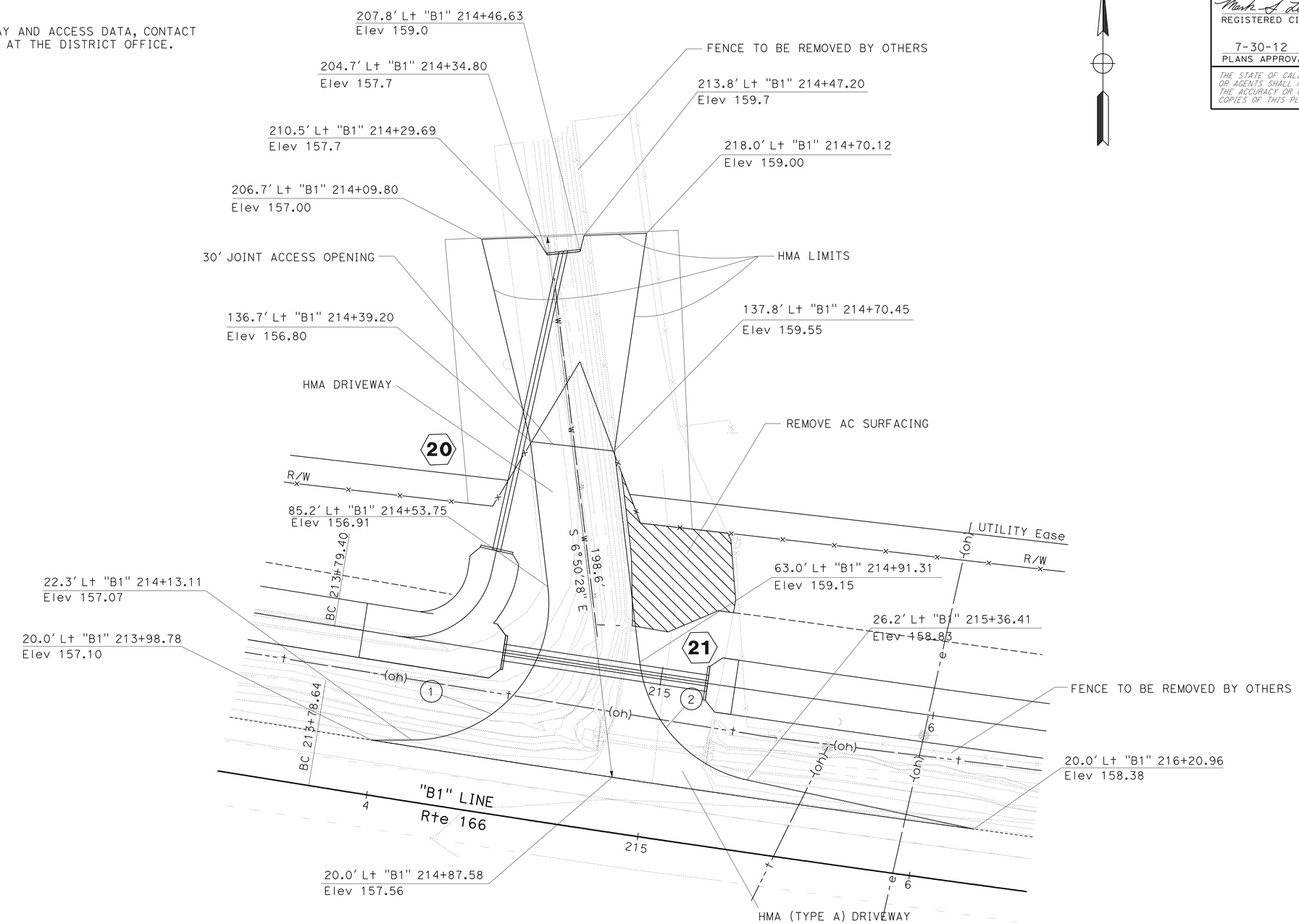

CURVE DATA

No.	R	Δ	T	L
1	50'	96°49'18"	56.34'	84.49'
2	50'	70°55'45"	35.62'	61.90'

DRIVEWAY ENTRANCE

"B1" 214+87.58

DRIVEWAY ALIGNMENT DETAILS

APPROVED FOR DRIVEWAY WORK ONLY

CONSTRUCTION DETAILS

SCALE: 1" = 20'

C-5

STATE OF CALIFORNIA - DEPARTMENT OF TRANSPORTATION
Caltrans
DESIGN

FUNCTIONAL SUPERVISOR: RON R. KRAEMER

MARK S. LEICHTFUSS
AMJED HETTINI

CALCULATED-DESIGNED BY
CHECKED BY

REVISED BY
DATE REVISED

LAST REVISION 5-24-12
DATE PLOTTED => 07-JAN-2013
TIME PLOTTED => 14:35

Dist	COUNTY	ROUTE	POST MILES TOTAL PROJECT	SHEET No.	TOTAL SHEETS
05	SB	166	0.9/2.4,3.8/4.8	31	84

Mark S. Leichtfuss 5-24-12
REGISTERED CIVIL ENGINEER DATE

7-30-12
PLANS APPROVAL DATE

REGISTERED PROFESSIONAL ENGINEER MARK S. LEICHTFUSS No. 69124 Exp. 6-30-12 CIVIL STATE OF CALIFORNIA

THE STATE OF CALIFORNIA OR ITS OFFICERS OR AGENTS SHALL NOT BE RESPONSIBLE FOR THE ACCURACY OR COMPLETENESS OF SCANNED COPIES OF THIS PLAN SHEET.

NOTE:

FOR ACCURATE RIGHT OF WAY AND ACCESS DATA, CONTACT RIGHT OF WAY ENGINEERING AT THE DISTRICT OFFICE.

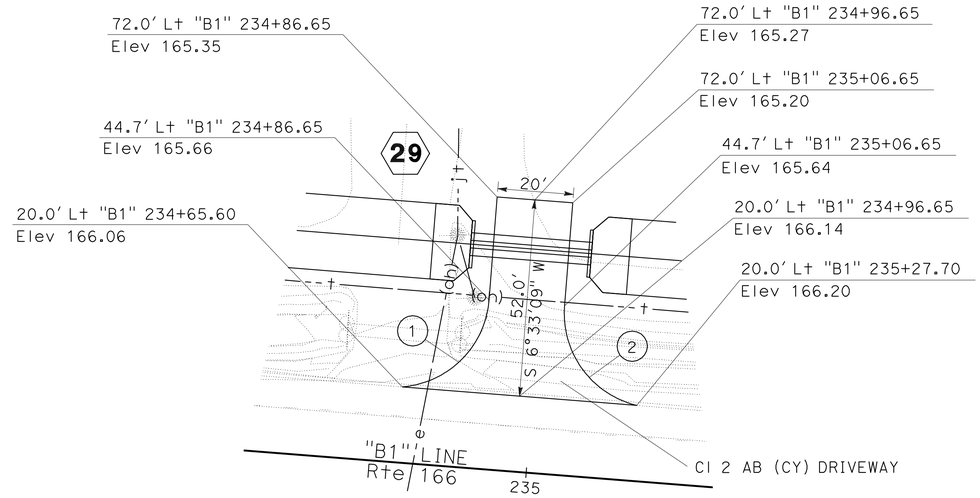

DRIVEWAY ENTRANCE
"B1" 234+96.65

CURVE DATA

No. ⊛	R	Δ	T	L
1	25'	80°54'35"	21.32'	35.30'
2	25'	80°54'35"	21.32'	35.30'
3	40'	86°13'50"	37.45'	60.20'
4	40'	80°5'01"	33.61'	55.91'

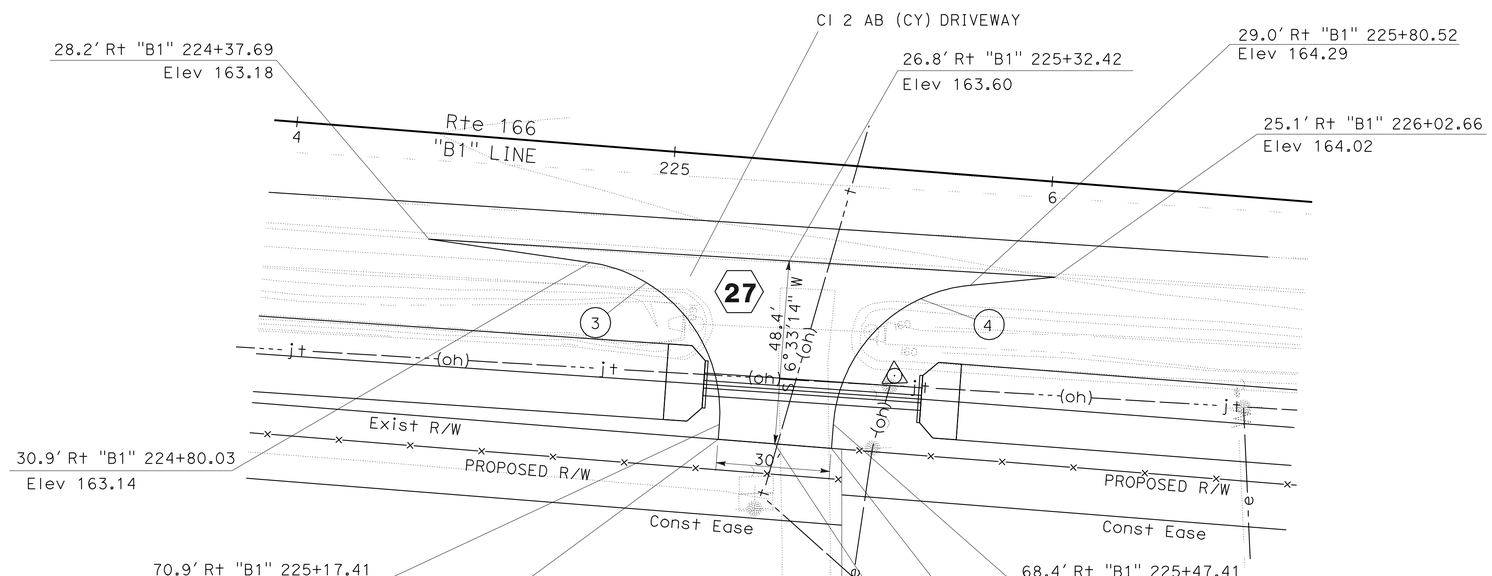

DRIVEWAY ENTRANCE
"B1" 225+32.41

APPROVED FOR DRIVEWAY WORK ONLY

DRIVEWAY ALIGNMENT DETAILS

CONSTRUCTION DETAILS
SCALE: 1" = 20'

C-6

STATE OF CALIFORNIA - DEPARTMENT OF TRANSPORTATION
Caltrans
DESIGN

FUNCTIONAL SUPERVISOR: RON R. KRAEMER
CALCULATED-DESIGNED BY: AMJED HETTINI
CHECKED BY: MARK S. LEICHTFUSS
REVISED BY
DATE REVISED

LAST REVISION 5-24-12
DATE PLOTTED => 07-JAN-2013
TIME PLOTTED => 14:35

Dist	COUNTY	ROUTE	POST MILES TOTAL PROJECT	SHEET No.	TOTAL SHEETS
05	SB	166	0.9/2.4,3.8/4.8	32	84

REGISTERED CIVIL ENGINEER 5-24-12 DATE

7-30-12
PLANS APPROVAL DATE

REGISTERED PROFESSIONAL ENGINEER MARK S. LEICHTFUSS No. 69124 Exp. 6-30-12 CIVIL STATE OF CALIFORNIA

THE STATE OF CALIFORNIA OR ITS OFFICERS OR AGENTS SHALL NOT BE RESPONSIBLE FOR THE ACCURACY OR COMPLETENESS OF SCANNED COPIES OF THIS PLAN SHEET.

NOTE:

FOR ACCURATE RIGHT OF WAY AND ACCESS DATA, CONTACT RIGHT OF WAY ENGINEERING AT THE DISTRICT OFFICE.

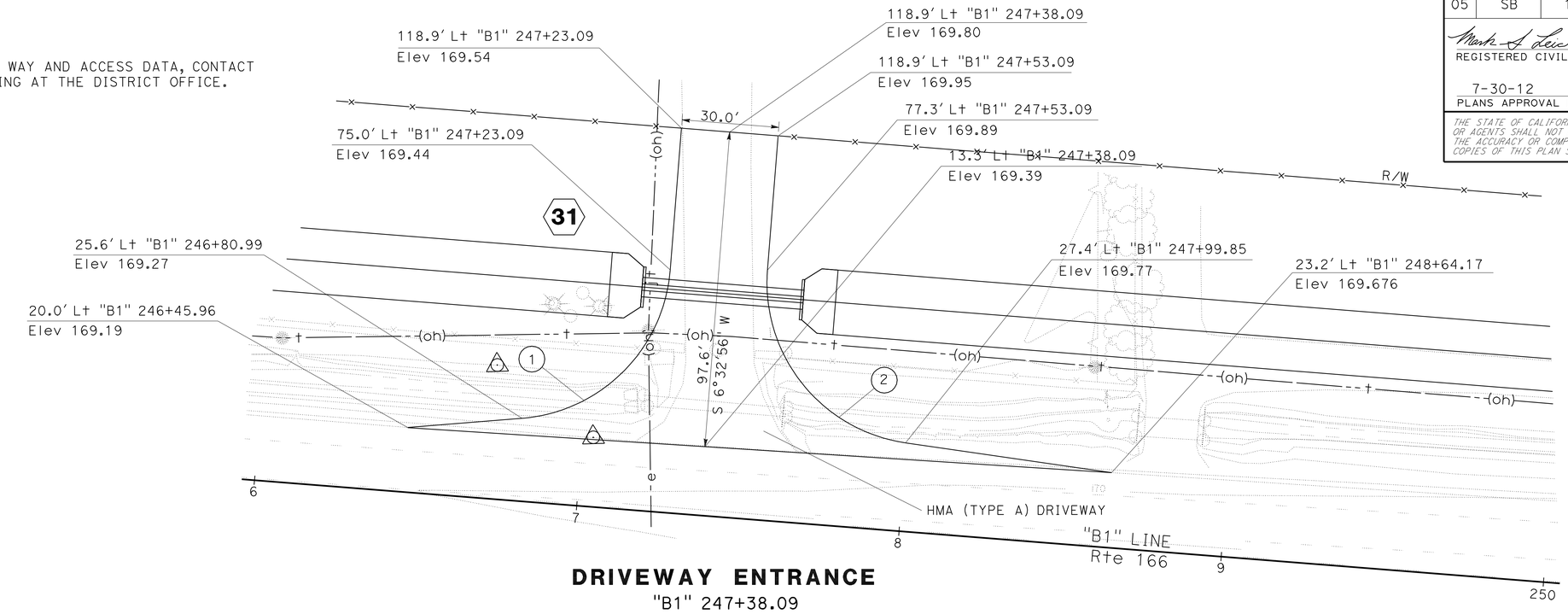

DRIVEWAY ENTRANCE

"B1" 247+38.09

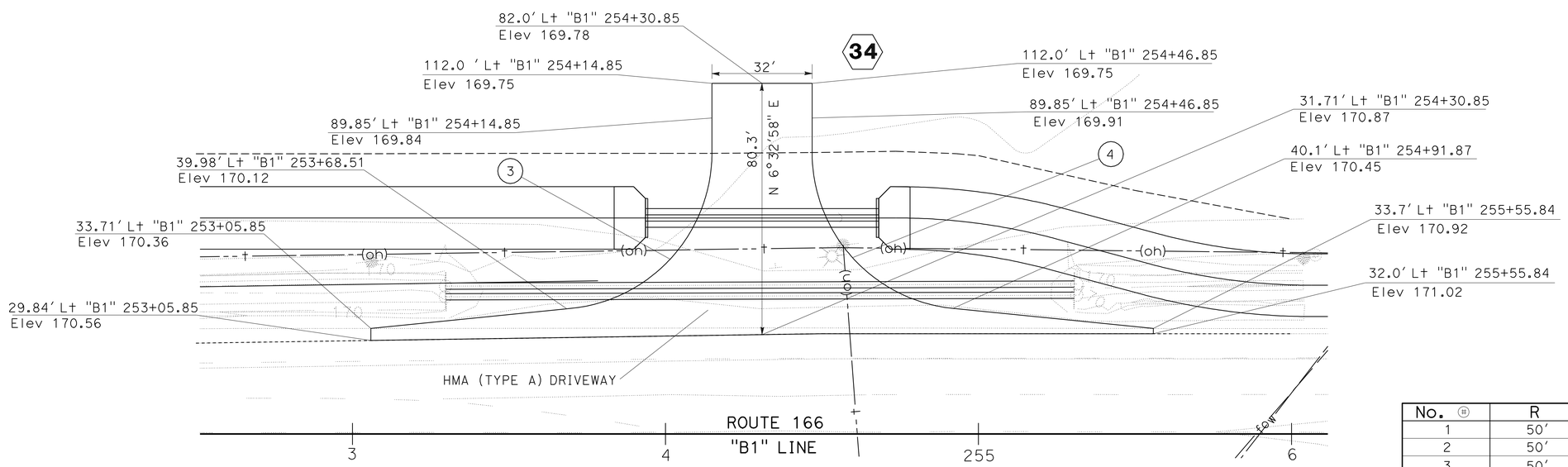

DRIVEWAY ENTRANCE

"B1" 254+30.85

CURVE DATA

No.	R	Δ	T	L
1	50'	80°54'35"	42.64'	70.61'
2	50'	86°16'52"	46.86'	75.29'
3	50'	85°47'49"	46.46'	74.88'
4	50'	84°17'41"	45.25'	73.56'

DRIVEWAY ALIGNMENT DETAILS

APPROVED FOR DRIVEWAY WORK ONLY

CONSTRUCTION DETAILS

SCALE: 1" = 20'

C-7

STATE OF CALIFORNIA - DEPARTMENT OF TRANSPORTATION

Caltrans

DESIGN

FUNCTIONAL SUPERVISOR: RON R. KRAEMER

CALCULATED-DESIGNED BY: MARK S. LEICHTFUSS

CHECKED BY: AMJED HETTINI

REVISED BY

DATE REVISED

LAST REVISION 5-24-12

DATE PLOTTED => 07-JAN-2013
TIME PLOTTED => 14:35

Dist	COUNTY	ROUTE	POST MILES TOTAL PROJECT	SHEET No.	TOTAL SHEETS
05	SB	166	0.9/2.4,3.8/4.8	33	84

Mark S. Leichtfuss 5-24-12
REGISTERED CIVIL ENGINEER DATE

7-30-12
PLANS APPROVAL DATE

REGISTERED PROFESSIONAL ENGINEER MARK S. LEICHTFUSS No. 69124 Exp. 6-30-12 CIVIL STATE OF CALIFORNIA

THE STATE OF CALIFORNIA OR ITS OFFICERS OR AGENTS SHALL NOT BE RESPONSIBLE FOR THE ACCURACY OR COMPLETENESS OF SCANNED COPIES OF THIS PLAN SHEET.

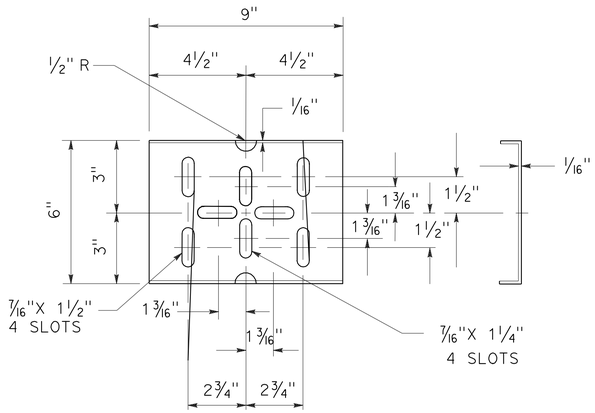

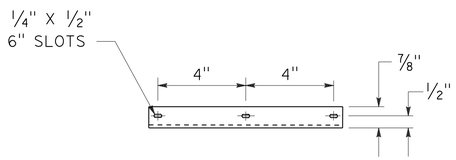

PLATFORM

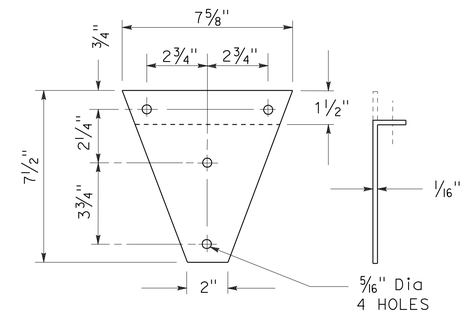

BRACKET

MAILBOX SHEET METAL SUPPORT HARDWARE

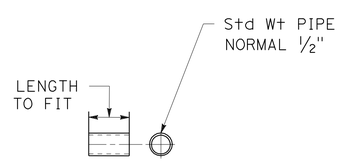

SPACER

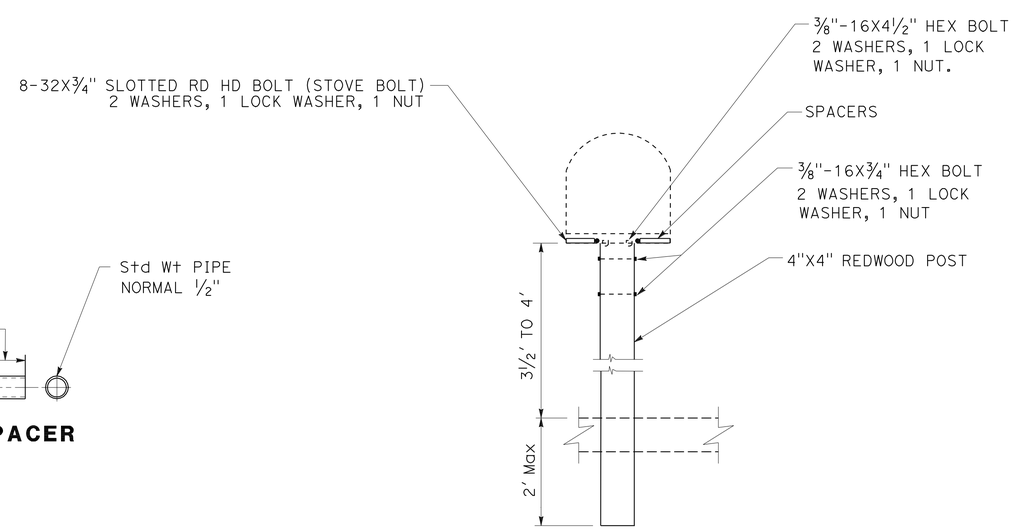

RESET MAILBOX DETAIL

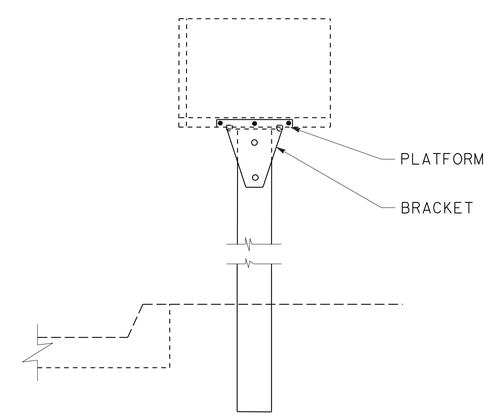

RESET MAILBOX

RURAL MAILBOX

CONSTRUCTION DETAILS

NO SCALE

C-8

STATE OF CALIFORNIA - DEPARTMENT OF TRANSPORTATION
Caltrans® DESIGN

FUNCTIONAL SUPERVISOR: RON R. KRAEMER

CALCULATED-DESIGNED BY: STEVEN GIOVANNETTI
CHECKED BY: MARK S. LEICHTFUSS

REVISED BY | DATE REVISED

LAST REVISION 5-24-12 | DATE PLOTTED => 07-JAN-2013 | TIME PLOTTED => 14:35

Dist	COUNTY	ROUTE	POST MILES TOTAL PROJECT	SHEET No.	TOTAL SHEETS
05	SB	166	0.9/2.4,3.8/4.8	34	84

Mark S. Leichtfuss 5-24-12
REGISTERED CIVIL ENGINEER DATE

7-30-12
PLANS APPROVAL DATE

REGISTERED PROFESSIONAL ENGINEER MARK S. LEICHTFUSS No. 69124 Exp. 6-30-12 CIVIL STATE OF CALIFORNIA

THE STATE OF CALIFORNIA OR ITS OFFICERS OR AGENTS SHALL NOT BE RESPONSIBLE FOR THE ACCURACY OR COMPLETENESS OF SCANNED COPIES OF THIS PLAN SHEET.

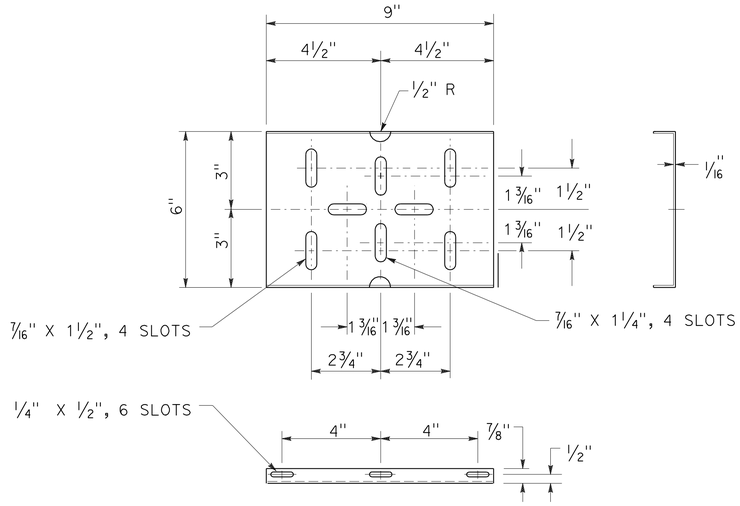

PLATFORM

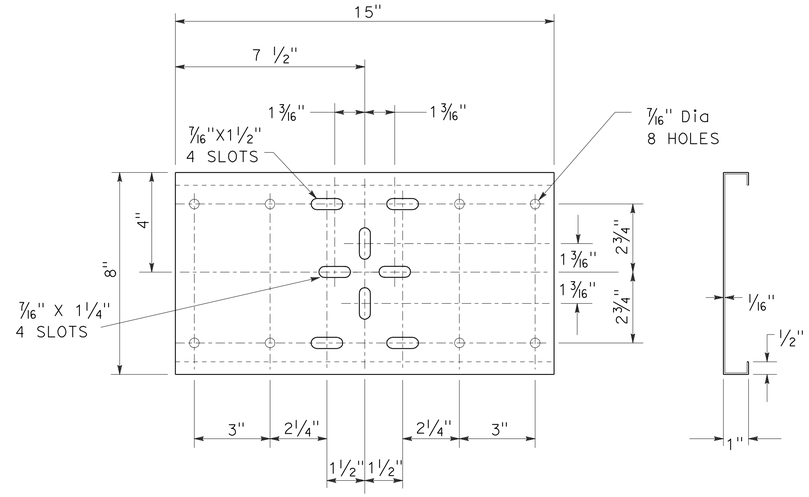

SHELF

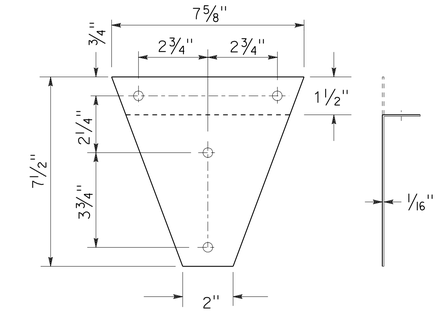

BRACKET

MAILBOX SHEET METAL SUPPORT HARDWARE

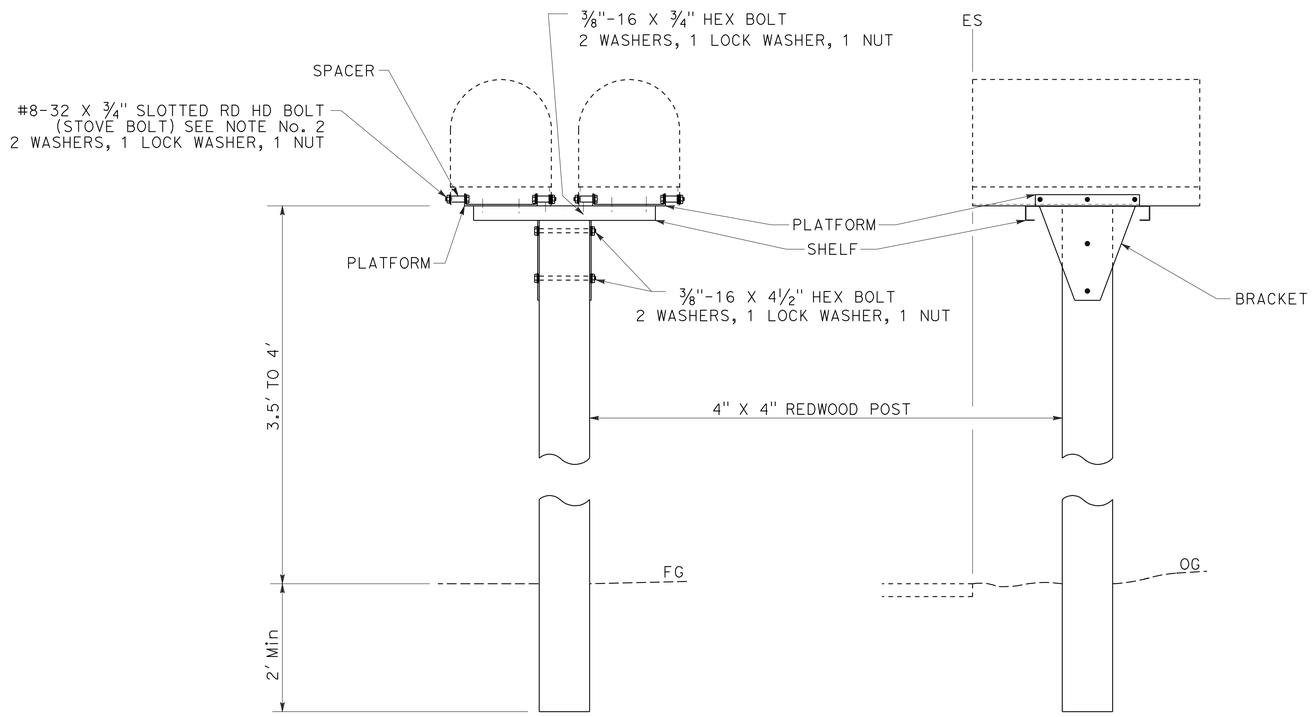

RESET MAILBOX DETAIL

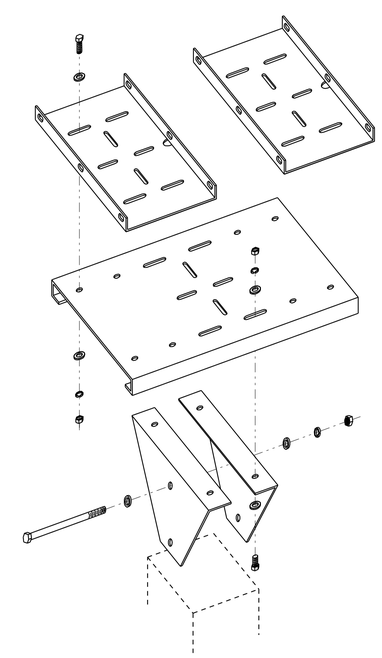

ASSEMBLY DETAIL

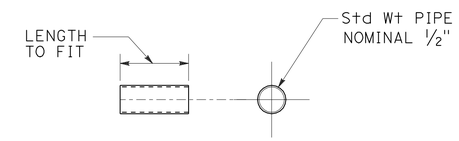

SPACER

NOTES:

1. POST SPACING TO BE 2'-0" MINIMUM.
2. SPACER LENGTH WILL VARY WITH TYPE OF EXISTING MAILBOX.

RESET MAILBOX (MULTIPLE)

CONSTRUCTION DETAILS

NO SCALE

C-9

STATE OF CALIFORNIA - DEPARTMENT OF TRANSPORTATION
Caltrans
DESIGN

FUNCTIONAL SUPERVISOR: RON R. KRAEMER
CALCULATED-DESIGNED BY: STEVEN GIOVANNETTI
CHECKED BY: MARK S. LEICHTFUSS
REVISED BY
DATE REVISED

LAST REVISION 5-24-12
DATE PLOTTED => 07-JAN-2013
TIME PLOTTED => 14:35

Dist	COUNTY	ROUTE	POST MILES TOTAL PROJECT	SHEET No.	TOTAL SHEETS
05	SB	166	0.9/2.4,3.8/4.8	35	84

REGISTERED CIVIL ENGINEER 5-24-12 DATE

7-30-12
PLANS APPROVAL DATE

REGISTERED PROFESSIONAL ENGINEER MARK S. LEICHTFUSS No. 69124 Exp. 6-30-12 CIVIL STATE OF CALIFORNIA

THE STATE OF CALIFORNIA OR ITS OFFICERS OR AGENTS SHALL NOT BE RESPONSIBLE FOR THE ACCURACY OR COMPLETENESS OF SCANNED COPIES OF THIS PLAN SHEET.

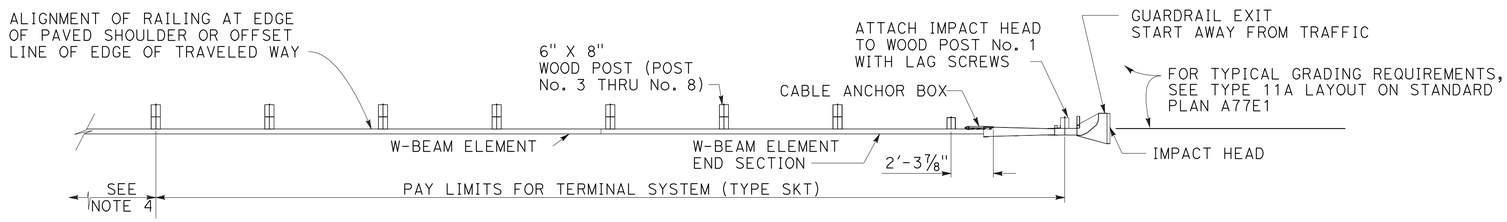

PLAN

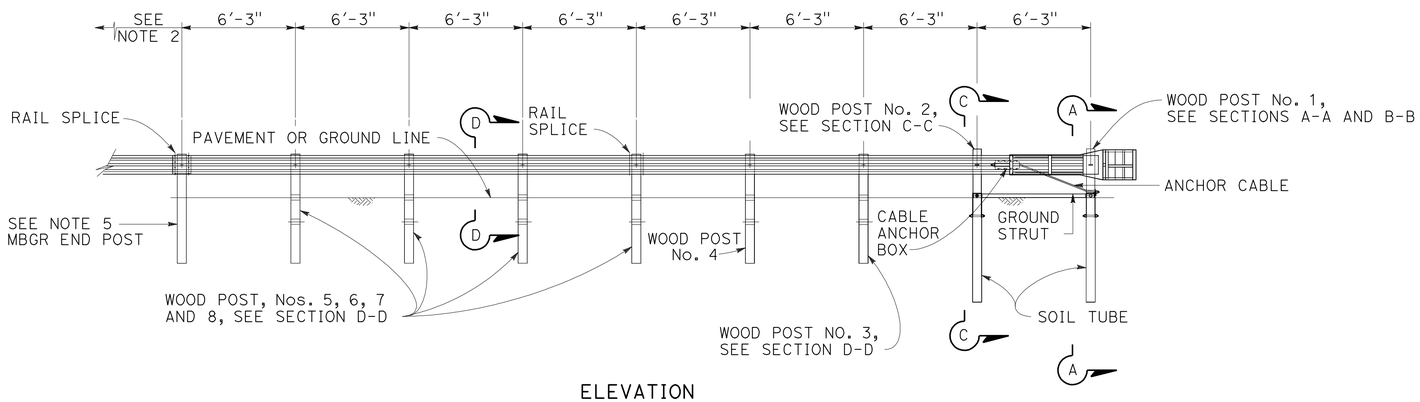

ELEVATION

NOTES:

1. FOR ADDITIONAL DETAILS OF TERMINAL SYSTEM (TYPE SKT), REFER TO THE MANUFACTURER'S INSTALLATION INSTRUCTIONS.
2. TERMINAL SYSTEM (TYPE SKT) MUST BE CONSTRUCTED SO THAT THE FULL LENGTH OF THE TERMINAL SYSTEM GUARD RAILING IS IN STRAIGHT ALIGNMENT. TERMINAL SYSTEM (TYPE SKT) CAN BE FLARED AT A MAXIMUM RATE OF 25:1 TO PREVENT THE IMPACT HEAD FROM ENCROACHING ON THE SHOULDER. THE FLARE IS NOT REQUIRED AND MAY BE DECREASED OR ELIMINATED FOR SPECIFIC INSTALLATIONS.
3. TERMINAL SYSTEM (TYPE SKT) NOT TO BE USED WHERE EXTRUSION OF THE RAIL ON THE BACK SIDE OF THE INSTALLATION WOULD BE IN THE PATH OF PEDESTRIAN TRAFFIC OR WHERE THERE IS LESS THAN 25'-0" BETWEEN THE OUTLET SIDE OF THE IMPACTED HEAD AND ANY ADJACENT VEHICLE TRAFFIC.
4. FOR THE LENGTH AND TYPE OF METAL BEAM GUARD RAILING OR METAL BARRIER RAILING THE TERMINAL SYSTEM IS ATTACHED TO, SEE LAYOUT SHEETS. FOR TYPICAL USE OF THIS TERMINAL SYSTEM WITH GUARD RAILING, SEE THE A77E, A77F AND A77G SERIES OF THE STANDARD PLANS.
5. ATTACH RAIL ELEMENT TO THIS POST AND BLOCK.

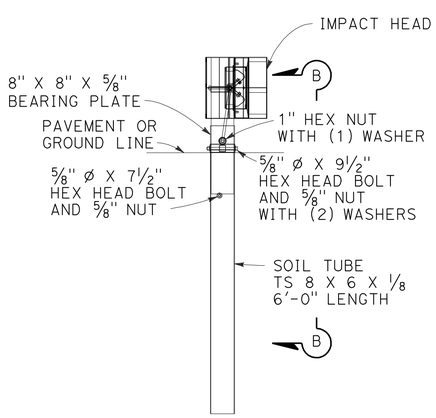

SECTION A-A

POST No. 1

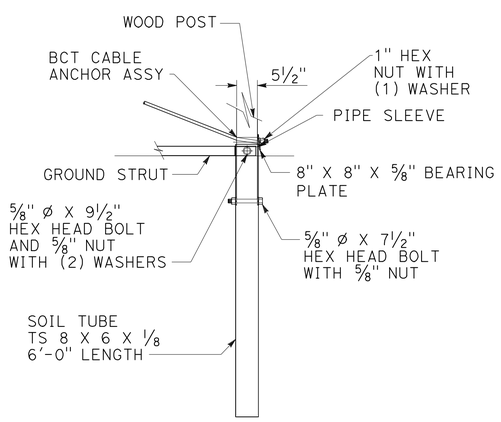

SECTION B-B

PARTIAL VIEW POST No. 1

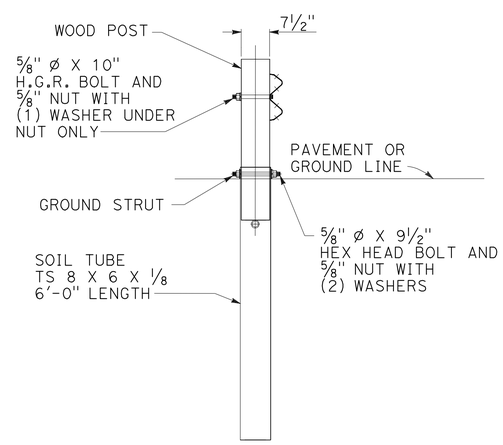

SECTION C-C

AT POST No. 2

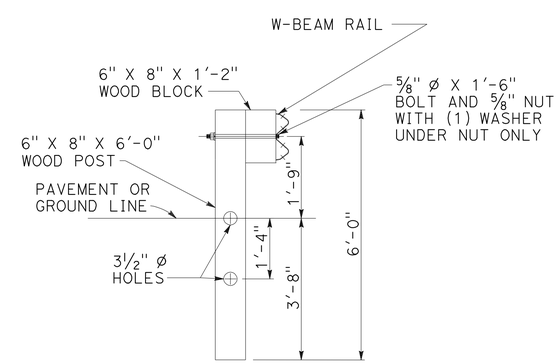

SECTION D-D

POST No. 3 THROUGH No. 8

MBGR TERMINAL SYSTEM (TYPE SKT)

CONSTRUCTION DETAILS C-10

NO SCALE

STATE OF CALIFORNIA - DEPARTMENT OF TRANSPORTATION
Caltrans
DESIGN
FUNCTIONAL SUPERVISOR: RON R. KRAEMER
CALCULATED-DESIGNED BY: MARK S. LEICHTFUSS
CHECKED BY
REVISED BY
DATE REVISED

LAST REVISION 5-24-12
DATE PLOTTED => 07-JAN-2013
TIME PLOTTED => 14:51

Dist	COUNTY	ROUTE	POST MILES TOTAL PROJECT	SHEET No.	TOTAL SHEETS
05	SB	166	0.9/2.4,3.8/4.8	36	84

REGISTERED CIVIL ENGINEER 5-24-12 DATE

7-30-12
PLANS APPROVAL DATE

REGISTERED PROFESSIONAL ENGINEER MARK S. LEICHTFUSS No. 69124 Exp. 6-30-12 CIVIL STATE OF CALIFORNIA

THE STATE OF CALIFORNIA OR ITS OFFICERS OR AGENTS SHALL NOT BE RESPONSIBLE FOR THE ACCURACY OR COMPLETENESS OF SCANNED COPIES OF THIS PLAN SHEET.

NOTES:

1. FOR ADDITIONAL DETAILS OF TERMINAL SYSTEM (TYPE ET), REFER TO THE MANUFACTURER'S INSTALLATION INSTRUCTIONS.
2. TERMINAL SYSTEM (TYPE ET) MUST BE CONSTRUCTED SO THAT THE FULL LENGTH OF THE TERMINAL SYSTEM GUARD RAILING IS IN STRAIGHT ALIGNMENT. THE GUARD RAIL EXTRUDER HEAD OF THE TERMINAL SYSTEM SHALL NOT ENCROACH UPON THE ADJACENT PAVED SHOULDER OR LANE. A TRAFFIC APPROACH FLARE OF 50:1 OR 25:1 FOR THE FULL LENGTH OF TERMINAL SYSTEM (TYPE ET) INSTALLATION MAY BE USED WHERE THE GUARD RAIL EXTRUDER HEAD WOULD ENCROACH UPON THE ADJACENT PAVED SHOULDER OR LANE.
3. SLIDE GUARD RAIL EXTRUDER OVER THE END OF THE RAIL ELEMENT AND ATTACH TO POST NO.1 WITH LAG SCREWS. DO NOT BOLT RAIL ELEMENT TO POST. GUARD RAIL EXTRUDER ATTACHMENT BRACKETS HAVE 3 HOLES IN EACH BRACKET TO PROVIDE TOLERANCE ADJUSTMENT. USE THE HOLES IN THE BRACKET CLOSEST TO CENTER OF POST NO.1. DRILL 1/4" PILOT HOLES TO ACCOMMODATE LAG SCREWS.
4. ATTACH STRUT TO POST NOS. 1 AND 2 FOUNDATION TUBES WITH HEX HEAD BOLTS, WASHERS AND HEX NUTS. BOLTS EXTEND THROUGH THE STRUT, STEEL FOUNDATION TUBE, AND WOOD POSTS. CHANNEL SIDE OF STRUT TO FACE DOWNWARD.
5. FOR LENGTH AND TYPE OF METAL BEAM GUARD RAILING OR METAL BARRIER RAILING THE TERMINAL SYSTEM IS ATTACHED TO, SEE LAYOUT PLANS. FOR TYPICAL USE OF THIS TERMINAL SYSTEM, SEE THE A77E, A77F AND A77G SERIES OF THE STANDARD PLANS.
6. ATTACH RAIL ELEMENT TO THIS POST AND BLOCK.
7. YELLOW RETROREFLECTIVE SHEETING, AS PROVIDED BY TERMINAL SYSTEM (TYPE ET) MANUFACTURER, SHALL BE ADHERED TO THE FACE OF EXTRUDER HEAD. THE SHEETING SHALL BE CONSISTENT WITH THE DESIGN PATTERN AND COLORS OF A TYPE P OBJECT MARKER PANEL.
8. ATTACH RAIL TO POST NO.2 (NO WOOD BLOCK) IN SAME MANNER SHOWN IN SECTION A-A. DO NOT BOLT RAIL TO POST NO.1, SEE NOTE 3.
9. TERMINAL SYSTEM (TYPE ET) NOT TO BE USED WHERE EXTRUSION OF THE RAIL ON THE BACK SIDE OF THE INSTALLATION WOULD BE IN THE PATH OF PEDESTRIAN OR VEHICULAR TRAFFIC.
10. A CONTINUOUS RAIL ELEMENT SECTION BETWEEN POST NOS.1 AND 5 (NO INTERMEDIATE RAIL SPLICES) MAY CONTINUE TO BE USED IN EXISTING INSTALLATIONS. NEW INSTALLATIONS SHALL BE CONSTRUCTED AS SHOWN WITH TWO RAIL ELEMENT SECTIONS BETWEEN POST NOS.1 AND 5.
11. A 6'-0" LENGTH STEEL FOUNDATION TUBE, TS 8 X 6 X 3/16", WITHOUT SOIL PLATE, MAY BE USED IN PLACE OF THE 4'-6" LENGTH STEEL FOUNDATION TUBE AND SOIL PLATE SHOWN. MINIMUM EMBEDMENT OF THE 6'-0" LENGTH TUBE SHALL BE 5'-9". A 5/8" Ø HEX HEAD BOLT AND NUTS SHALL BE INSTALLED IN THE HOLE IN THE 6'-0" LENGTH TUBE TO KEEP THE WOOD POST FROM DROPPING INTO THE TUBE.

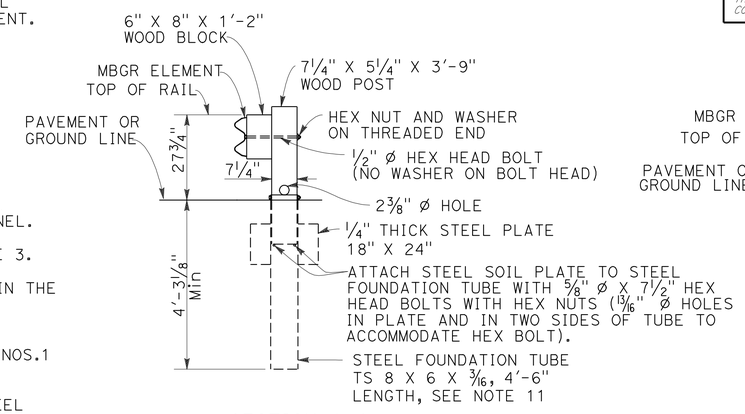

SECTION A-A

SOIL PLATE AND WOOD POST ATTACHMENT TO STEEL FOUNDATION TUBE SIMILAR FOR POST Nos. 1, 2 AND 4. WOOD BLOCKS NOT USED WITH POST Nos. 1 AND 2. SEE NOTE 8.

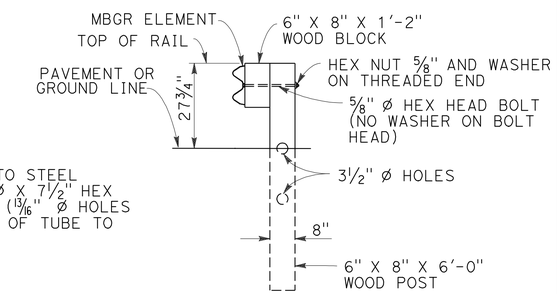

SECTION B-B

POST NOS. 5, 7 AND 8 SIMILAR EXCEPT RAIL ELEMENTS ARE NOT ATTACHED TO POST Nos. 5 AND 7

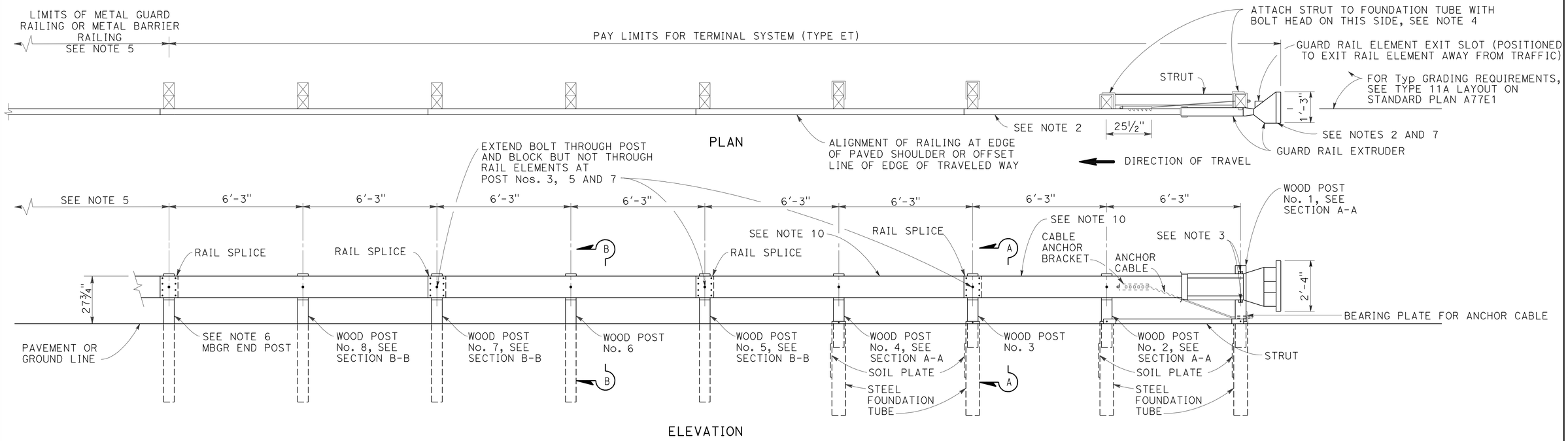

MBGR TERMINAL SYSTEM (TYPE ET)

(TYPE ET PLUS SHOWN)
SEE NOTES 9 AND 10

CONSTRUCTION DETAILS

NO SCALE

C-11

STATE OF CALIFORNIA - DEPARTMENT OF TRANSPORTATION
DESIGN
Caltrans
FUNCTIONAL SUPERVISOR: RON R. KRAEMER
CALCULATED-DESIGNED BY: MARK S. LEICHTFUSS
CHECKED BY
REVISED BY
DATE REVISED

LAST REVISION 5-24-12
DATE PLOTTED => 07-JAN-2013
TIME PLOTTED => 14:52

Dist	COUNTY	ROUTE	POST MILES TOTAL PROJECT	SHEET No.	TOTAL SHEETS
05	SB	166	0.9/2.4,3.8/4.8	37	84

Mark S. Leichtfuss 5-24-12
REGISTERED CIVIL ENGINEER DATE

7-30-12
PLANS APPROVAL DATE

REGISTERED PROFESSIONAL ENGINEER MARK S. LEICHTFUSS No. 69124 Exp. 6-30-12 CIVIL STATE OF CALIFORNIA

THE STATE OF CALIFORNIA OR ITS OFFICERS OR AGENTS SHALL NOT BE RESPONSIBLE FOR THE ACCURACY OR COMPLETENESS OF SCANNED COPIES OF THIS PLAN SHEET.

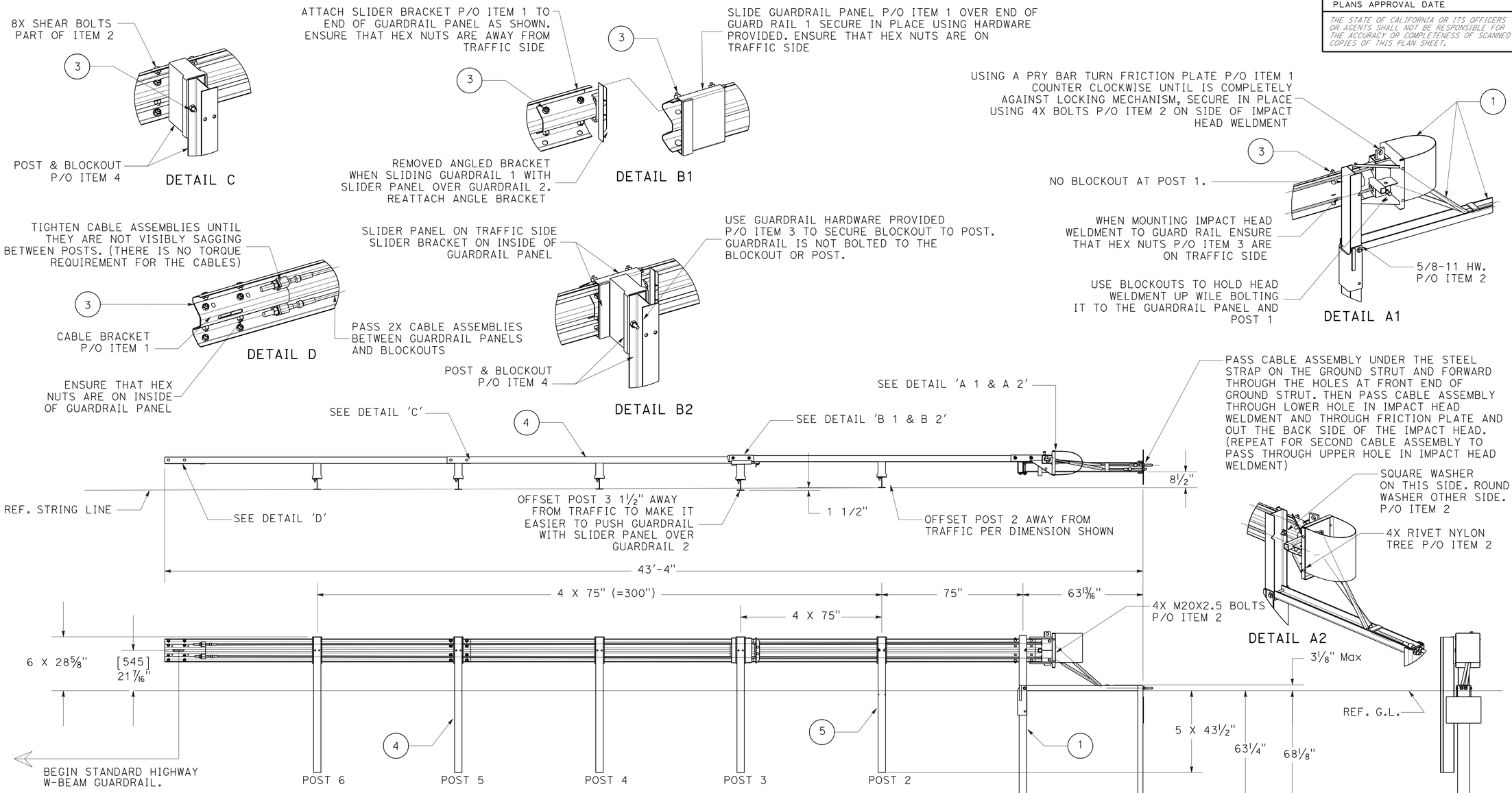

NOTES: UNLESS OTHERWISE SPECIFIED

1. SYSTEM TO BE INSTALLED PER MANUFACTURER SPECIFICATIONS.
2. ONLY TIGHTEN THE CABLE ASSEMBLIES USING THE NUTS AT THE CABLE BRACKET (SEE DETAIL D). DO NOT TIGHTEN THE CABLES AT THE FRONT OF THE GROUND ANCHOR.
3. WHEN DRIVING STEEL POST, ENSURE THAT A DRIVING CAP WITH TIMBER OR PLASTIC INSERT IS USED TO PREVENT DAMAGE TO THE GALVANIZING TO THE TOP OF THE POST.

MBGR TERMINAL SYSTEM (TYPE X-TENSION)

CONSTRUCTION DETAILS

NO SCALE

C-12

STATE OF CALIFORNIA - DEPARTMENT OF TRANSPORTATION
Caltrans DESIGN
FUNCTIONAL SUPERVISOR: RON R. KRAEMER
CALCULATED-DESIGNED BY: MARK S. LEICHTFUSS
CHECKED BY
REVISED BY
DATE REVISED

LAST REVISION 5-24-12
DATE PLOTTED => 07-JAN-2013
TIME PLOTTED => 14:35

Dist	COUNTY	ROUTE	POST MILES TOTAL PROJECT	SHEET No.	TOTAL SHEETS
05	SB	166	0.9/2.4,3.8/4.8	38	84

REGISTERED CIVIL ENGINEER 5-24-12 DATE

7-30-12
PLANS APPROVAL DATE

LICENSED LANDSCAPE ARCHITECT PATRICK K. BOLGER No. 2122 Signature 11-30-2012 Renewal Date 03-08-12 Date STATE OF CALIFORNIA

THE STATE OF CALIFORNIA OR ITS OFFICERS OR AGENTS SHALL NOT BE RESPONSIBLE FOR THE ACCURACY OR COMPLETENESS OF SCANNED COPIES OF THIS PLAN SHEET.

FIBER ROLLS

SEQUENCE	ITEM	MATERIAL		REMARKS
		DESCRIPTION	TYPE	
Fiber Rolls must be installed before Hydroseed.	FIBER ROLL	FIBER ROLL	TYPE B Filled with Straw 8" TO 10" Dia	Type 1 Installation

HYDROSEED

ITEM	MATERIAL		APPLICATION RATE	REMARKS
	DESCRIPTION	TYPE		
HYDROSEED	SEED	MIX	20 LB/ACRE	HYDROSEED SHALL NOT BE APPLIED 5' FROM FLOW LINES OF DITCHES OR IN CONSTRUCTION EASEMENT AREAS
	FIBER	WOOD	1000 LB/ACRE	
	TACKIFIER	GUAR	150 LB/ACRE	

SEED MIX

SEED	BOTANICAL NAME (COMMON NAME)	PERCENT GERMINATION (MINIMUM)	POUNDS PURE LIVE SEED PER ACRE (SLOPE MEASUREMENT)
MIX	CASTILLEJA EXSERTA (PURPLE OWL'S CLOVER)	50	0.4
	ELYMUS ELYMOIDES (SQUIRRELTAIL)	60	7.8
	LASTHENIA CALIFORNICA (DWARF GOLDFIELDS)	50	0.6
	LAYIA PLATYGLOSS (TIDY TIPS)	70	2.7
	LOTUS PURSHIANUS (PURSHING)	70	0.6
	MELICA IMPERFECTA (COAST RANGE MELIC)	60	2.4
	VULPIA MICROSTACHYS (SMALL FESCUE)	80	5.5

EROSION CONTROL QUANTITIES

SHEET	LOCATION			HYDROSEED	FIBER ROLLS	REMARKS
	STATION	L†	R†	SQFT	LF	
NOT SHOWN ON PLANS	"B1" 44+60 TO 126+20	X		309,712		ROADSIDE SHOULDER
	"B1" 44+60 TO 126+20		X	313,196		ROADSIDE SHOULDER
	"B1" 47+20+20	X	X		60	SIMAS STREET AT TOP OF HEAD WALLS
	"B1" 59+42.88		X		60	DRIVEWAY ENTRANCE AT TOP OF HEADWALLS
	"B1" 63+16.19	X			60	DRIVEWAY ENTRANCE AT TOP OF HEADWALLS
	"B1" 71+67.50		X		60	DRIVEWAY ENTRANCE AT TOP OF HEADWALLS
	"B1" 73+36.73	X			60	DRIVEWAY ENTRANCE AT TOP OF HEADWALLS
	"B1" 79+89.57		X		60	DRIVEWAY ENTRANCE AT TOP OF HEADWALLS
	"B1" 90+98.98		X		60	DRIVEWAY ENTRANCE AT TOP OF HEADWALLS
	"B1" 91+59.63	X			60	DRIVEWAY ENTRANCE AT TOP OF HEADWALLS
	"B1" 101+90.70	X			60	DRIVEWAY ENTRANCE AT TOP OF HEADWALLS
	"B1" 102+05.68		X		60	DRIVEWAY ENTRANCE AT TOP OF HEADWALLS
	"B1" 105+08.64	X			60	DRIVEWAY ENTRANCE AT TOP OF HEADWALLS
	"B1" 111+84.11	X			60	DRIVEWAY ENTRANCE AT TOP OF HEADWALLS
	"B1" 113+03.13		X		60	DRIVEWAY ENTRANCE AT TOP OF HEADWALLS
	"B1" 121+68.82	X			60	DRIVEWAY ENTRANCE AT TOP OF HEADWALLS
	"B1" 121+75.54		X		60	DRIVEWAY ENTRANCE AT TOP OF HEADWALLS
	"B1" 201+51.89		X		60	DRIVEWAY ENTRANCE AT TOP OF HEADWALLS
	"B1" 202+00 TO 256+20	X		417,740		ROADSIDE SHOULDER
	"B1" 199+50 TO 256+20		X	212,137		ROADSIDE SHOULDER
	"B1" 214+87.58	X			100	DRIVEWAY ENTRANCE AT TOP OF HEADWALLS
	"B1" 214+87.58		X		60	RAY ROAD AT TOP OF HEADWALLS
	"B1" 225+32.41		X		60	DRIVEWAY ENTRANCE AT TOP OF HEADWALLS
	"B1" 234+96.65	X			60	DRIVEWAY ENTRANCE AT TOP OF HEADWALLS
	"B1" 247+38.09	X			60	DRIVEWAY ENTRANCE AT TOP OF HEADWALLS
	"B1" 254+30.18	X			60	DRIVEWAY ENTRANCE AT TOP OF HEADWALLS
	"B1" 254+30.18		X		60	BLACK ROAD AT TOP OF HEADWALLS
TOTAL				1,252,785	1,420	

EROSION CONTROL LEGEND AND QUANTITIES

ECL-1

REVISED BY | DATE REVISED

PATRICK K. BOLGER | KRISTEN LANGAGER

CALCULATED-DESIGNED BY | CHECKED BY

FUNCTIONAL SUPERVISOR | DENNIS REVEES

STATE OF CALIFORNIA - DEPARTMENT OF TRANSPORTATION

Caltrans® LANDSCAPE ARCHITECTURE

LAST REVISION 5-24-12 | DATE PLOTTED => 07-JAN-2013 | TIME PLOTTED => 14:56

Dist	COUNTY	ROUTE	POST MILES TOTAL PROJECT	SHEET No.	TOTAL SHEETS
05	SB	166	0.9/2.4,3.8/4.8	39	84

REGISTERED CIVIL ENGINEER 5-24-12 DATE

7-30-12
PLANS APPROVAL DATE

REGISTERED PROFESSIONAL ENGINEER MARK S. LEICHTFUSS No. 69124 Exp. 6-30-12 CIVIL STATE OF CALIFORNIA

THE STATE OF CALIFORNIA OR ITS OFFICERS OR AGENTS SHALL NOT BE RESPONSIBLE FOR THE ACCURACY OR COMPLETENESS OF SCANNED COPIES OF THIS PLAN SHEET.

NOTE:

SEE LAYOUTS AND DRAINAGE QUANTITIES FOR EXISTING DRAINAGE FACILITIES TO BE REMOVED.

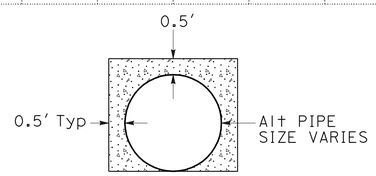

TYPICAL DETAIL
CONCRETE BACKFALL (PIPE TRENCH)

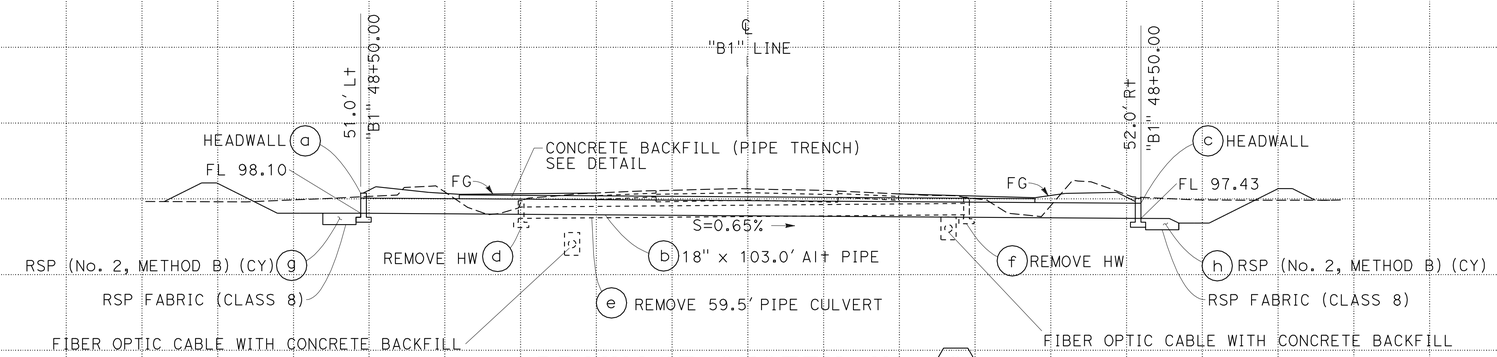

DRAINAGE SYSTEM No. 3
"B1" 48+50.00

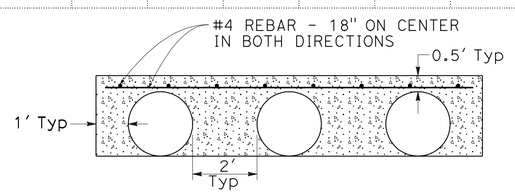

CONCRETE BACKFILL (PIPE TRENCH) DETAIL
MODIFIED DOUBLE HEADWALL

2

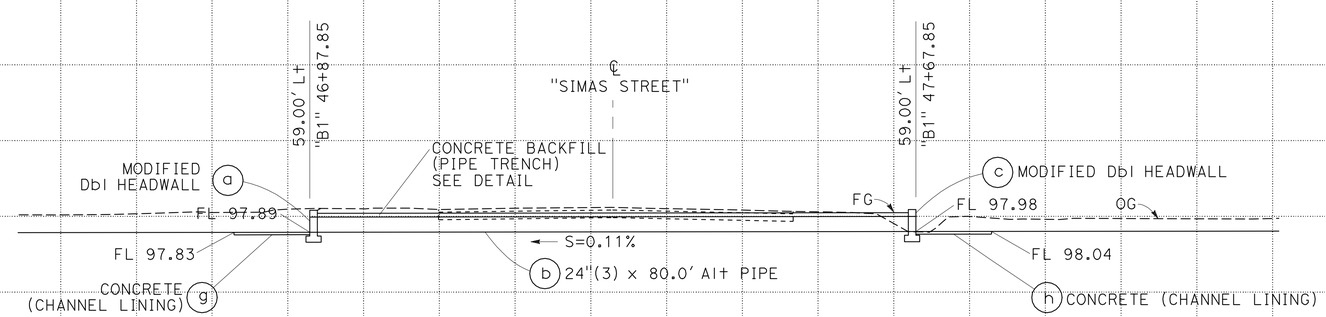

DRAINAGE SYSTEM No. 2

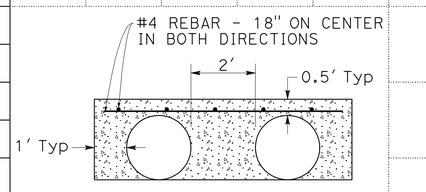

CONCRETE BACKFILL (PIPE TRENCH) DETAIL
DOUBLE HEADWALL

1

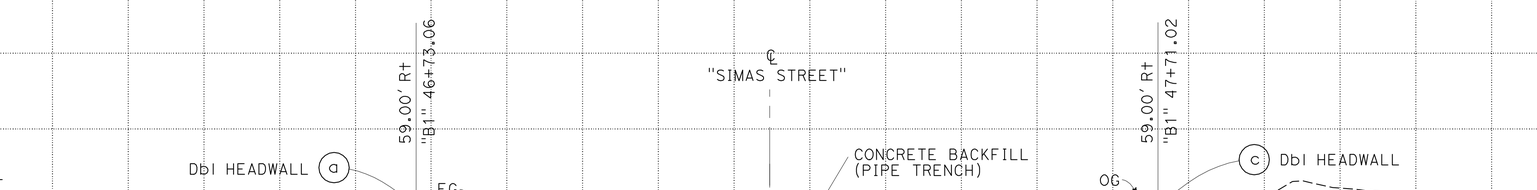

DRAINAGE SYSTEM No. 1

DRAINAGE PROFILES AND DETAILS

SCALE: Horiz 1" = 10′
Vert 1" = 10′

DP-1

REVISED BY | DATE REVISED
QUAY CHESTER | MARK S. LEICHTFUSS
CALCULATED-DESIGNED BY | CHECKED BY
FUNCTIONAL SUPERVISOR | RON R. KRAEMER
STATE OF CALIFORNIA - DEPARTMENT OF TRANSPORTATION
Caltrans® DESIGN

LAST REVISION 5-24-12 | DATE PLOTTED => 07-JAN-2013 | TIME PLOTTED => 14:35

Dist	COUNTY	ROUTE	POST MILES TOTAL PROJECT	SHEET No.	TOTAL SHEETS
05	SB	166	0.9/2.4,3.8/4.8	40	84

Mark S. Leichtfuss 5-24-12
REGISTERED CIVIL ENGINEER DATE

7-30-12
PLANS APPROVAL DATE

REGISTERED PROFESSIONAL ENGINEER
MARK S. LEICHTFUSS
No. 69124
Exp. 6-30-12
CIVIL
STATE OF CALIFORNIA

THE STATE OF CALIFORNIA OR ITS OFFICERS OR AGENTS SHALL NOT BE RESPONSIBLE FOR THE ACCURACY OR COMPLETENESS OF SCANNED COPIES OF THIS PLAN SHEET.

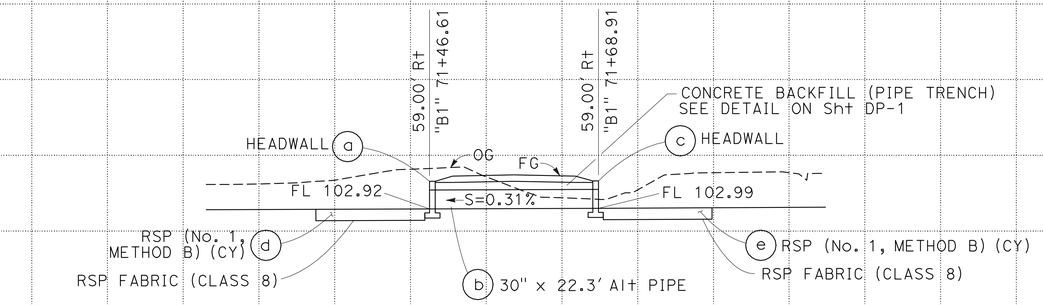

DRAINAGE SYSTEM No. 6

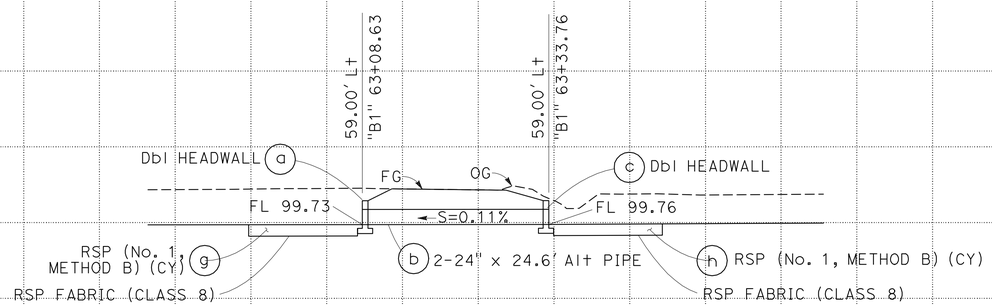

DRAINAGE SYSTEM No. 5

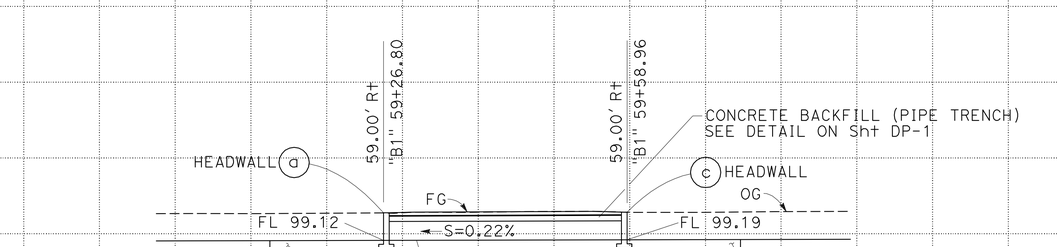

DRAINAGE SYSTEM No. 4

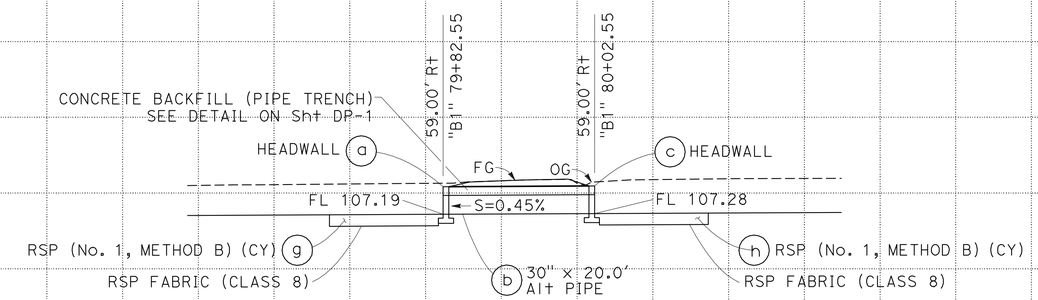

DRAINAGE SYSTEM No. 8

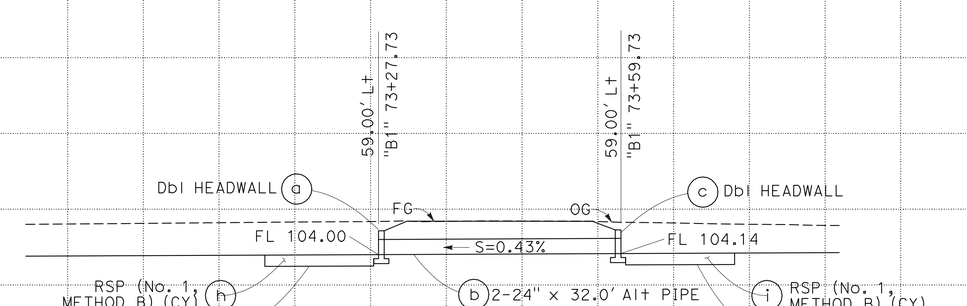

DRAINAGE SYSTEM No. 7

DRAINAGE PROFILES

SCALE: Horiz 1" = 10'
Vert 1" = 10'

DP-2

STATE OF CALIFORNIA - DEPARTMENT OF TRANSPORTATION
Caltrans®
DESIGN
FUNCTIONAL SUPERVISOR: RON R. KRAEMER
CALCULATED-DESIGNED BY: QUAY CHESTER
CHECKED BY: MARK S. LEICHTFUSS
REVISED BY
DATE REVISED

LAST REVISION 5-24-12
DATE PLOTTED => 07-JAN-2013
TIME PLOTTED => 14:36

Dist	COUNTY	ROUTE	POST MILES TOTAL PROJECT	SHEET No.	TOTAL SHEETS
05	SB	166	0.9/2.4,3.8/4.8	41	84

Mark S. Leichtfuss 5-24-12
REGISTERED CIVIL ENGINEER DATE

7-30-12
PLANS APPROVAL DATE

REGISTERED PROFESSIONAL ENGINEER
MARK S. LEICHTFUSS
No. 69124
Exp. 6-30-12
CIVIL
STATE OF CALIFORNIA

THE STATE OF CALIFORNIA OR ITS OFFICERS OR AGENTS SHALL NOT BE RESPONSIBLE FOR THE ACCURACY OR COMPLETENESS OF SCANNED COPIES OF THIS PLAN SHEET.

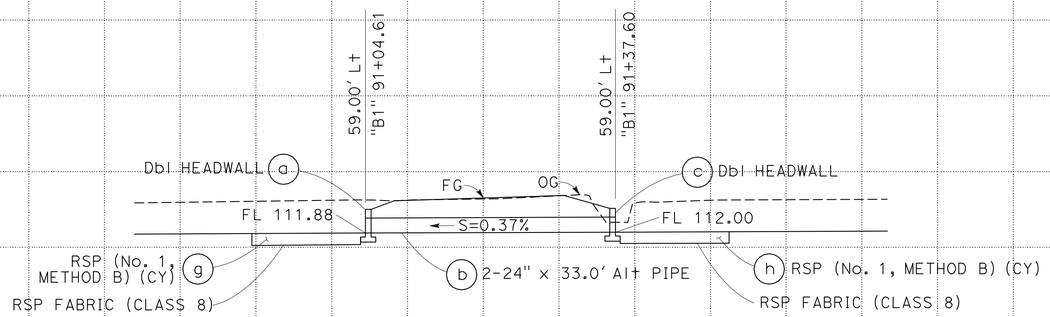

DRAINAGE SYSTEM No. 10

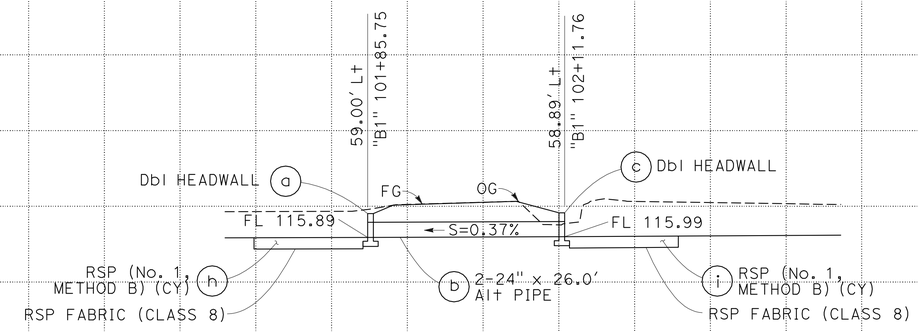

DRAINAGE SYSTEM No. 12

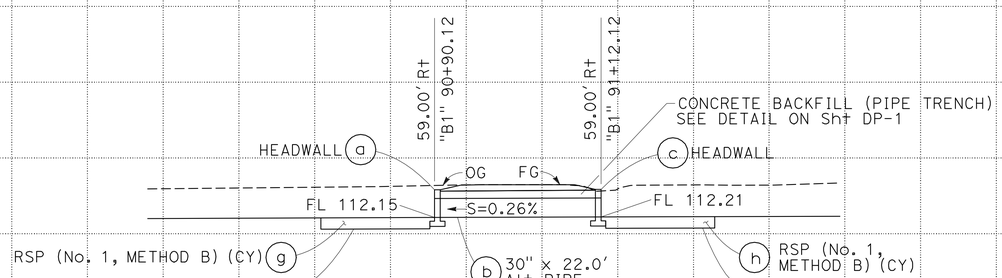

DRAINAGE SYSTEM No. 9

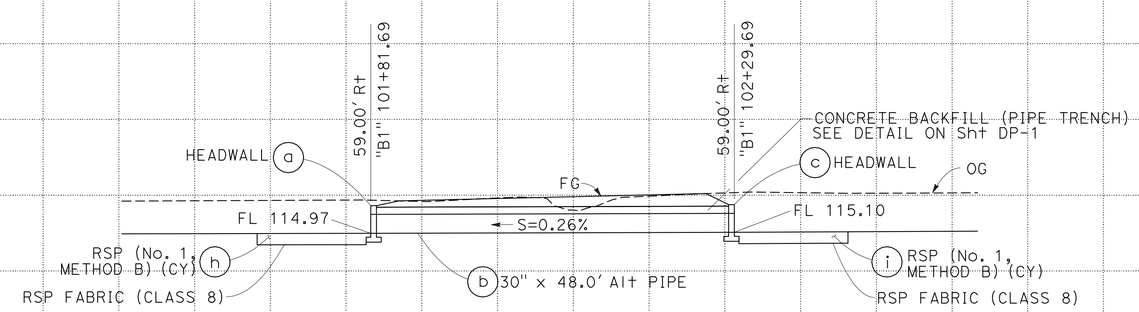

DRAINAGE SYSTEM No. 11

DRAINAGE PROFILES

SCALE: Horiz 1" = 10'
Vert 1" = 10'

DP-3

STATE OF CALIFORNIA - DEPARTMENT OF TRANSPORTATION
Caltrans
DESIGN
FUNCTIONAL SUPERVISOR: RON R. KRAEMER
QUAY CHESTER
MARK S. LEICHTFUSS
CALCULATED-DESIGNED BY
CHECKED BY
REVISED BY
DATE REVISED

LAST REVISION 5-24-12
DATE PLOTTED => 07-JAN-2013
TIME PLOTTED => 14:36

Dist	COUNTY	ROUTE	POST MILES TOTAL PROJECT	SHEET No.	TOTAL SHEETS
05	SB	166	0.9/2.4,3.8/4.8	42	84

Mark S. Leichtfuss 5-24-12
REGISTERED CIVIL ENGINEER DATE

7-30-12
PLANS APPROVAL DATE

REGISTERED PROFESSIONAL ENGINEER
MARK S. LEICHTFUSS
No. 69124
Exp. 6-30-12
CIVIL
STATE OF CALIFORNIA

THE STATE OF CALIFORNIA OR ITS OFFICERS OR AGENTS SHALL NOT BE RESPONSIBLE FOR THE ACCURACY OR COMPLETENESS OF SCANNED COPIES OF THIS PLAN SHEET.

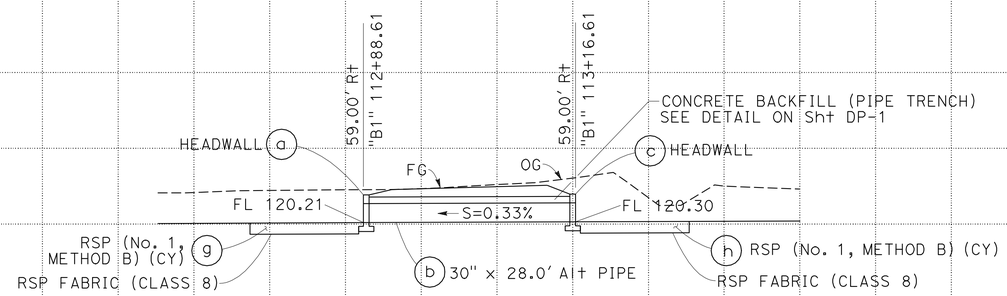

DRAINAGE SYSTEM No. 15

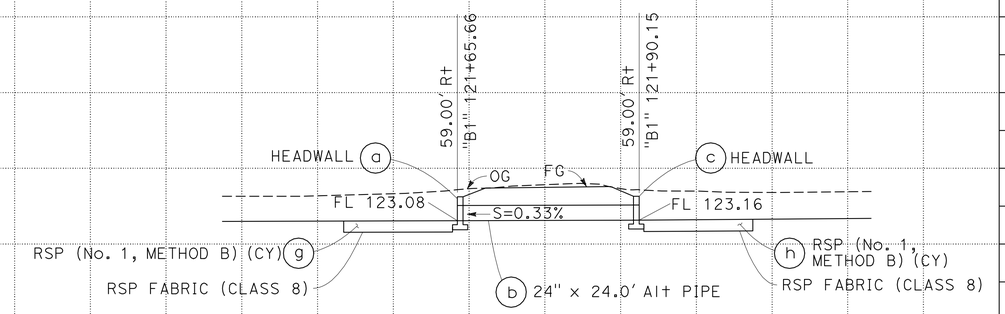

DRAINAGE SYSTEM No. 17

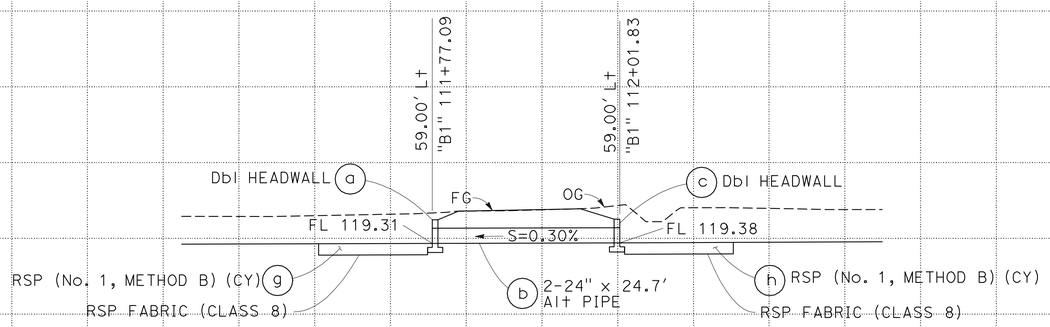

DRAINAGE SYSTEM No. 14

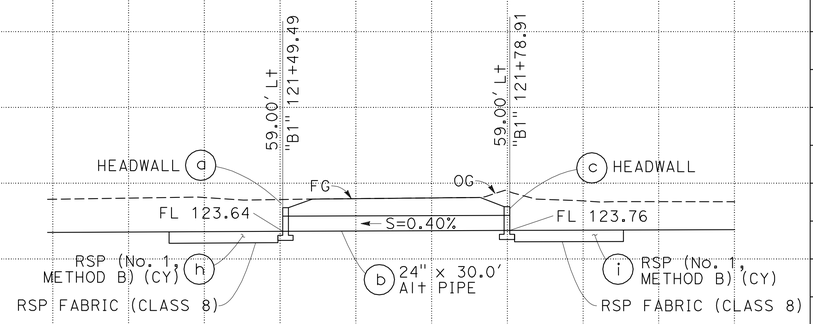

DRAINAGE SYSTEM No. 16

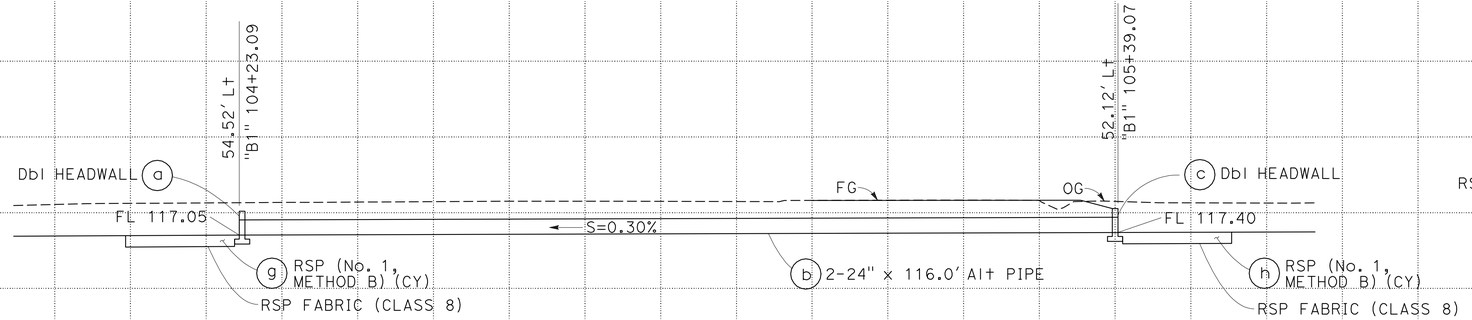

DRAINAGE SYSTEM No. 13

DRAINAGE PROFILES

SCALE: Horiz 1" = 10'
Vert 1" = 10'

DP-4

STATE OF CALIFORNIA - DEPARTMENT OF TRANSPORTATION
Caltrans® DESIGN

FUNCTIONAL SUPERVISOR: RON R. KRAEMER
CALCULATED-DESIGNED BY: MARK S. LEICHTFUSS
CHECKED BY
REVISED BY
DATE REVISED
QUAY CHESTER

LAST REVISION 5-24-12
DATE PLOTTED => 07-JAN-2013
TIME PLOTTED => 14:36

Dist	COUNTY	ROUTE	POST MILES TOTAL PROJECT	SHEET No.	TOTAL SHEETS
05	SB	166	0.9/2.4,3.8/4.8	43	84

REGISTERED CIVIL ENGINEER 5-24-12 DATE

7-30-12
PLANS APPROVAL DATE

REGISTERED PROFESSIONAL ENGINEER MARK S. LEICHTFUSS No. 69124 Exp. 6-30-12 CIVIL STATE OF CALIFORNIA

THE STATE OF CALIFORNIA OR ITS OFFICERS OR AGENTS SHALL NOT BE RESPONSIBLE FOR THE ACCURACY OR COMPLETENESS OF SCANNED COPIES OF THIS PLAN SHEET.

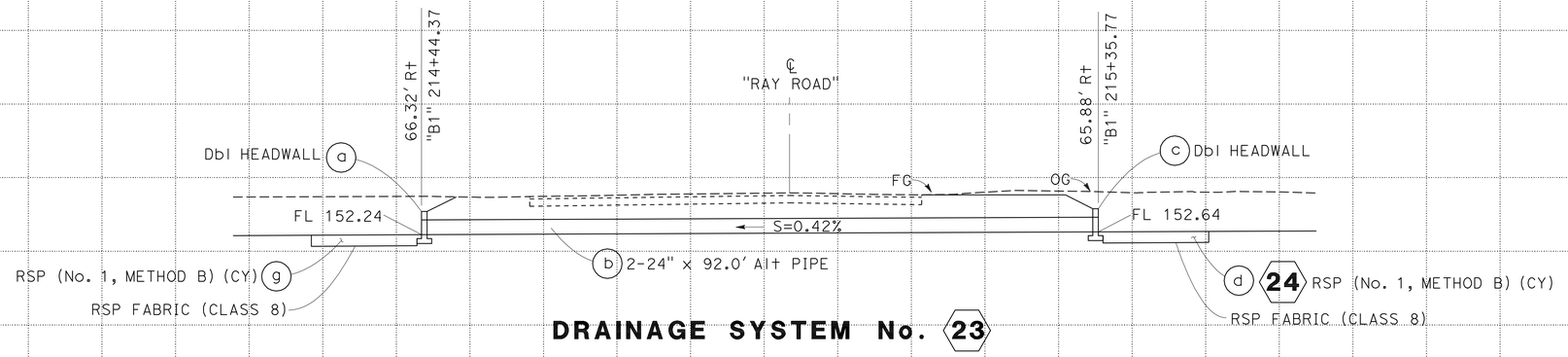

DRAINAGE SYSTEM No. 23

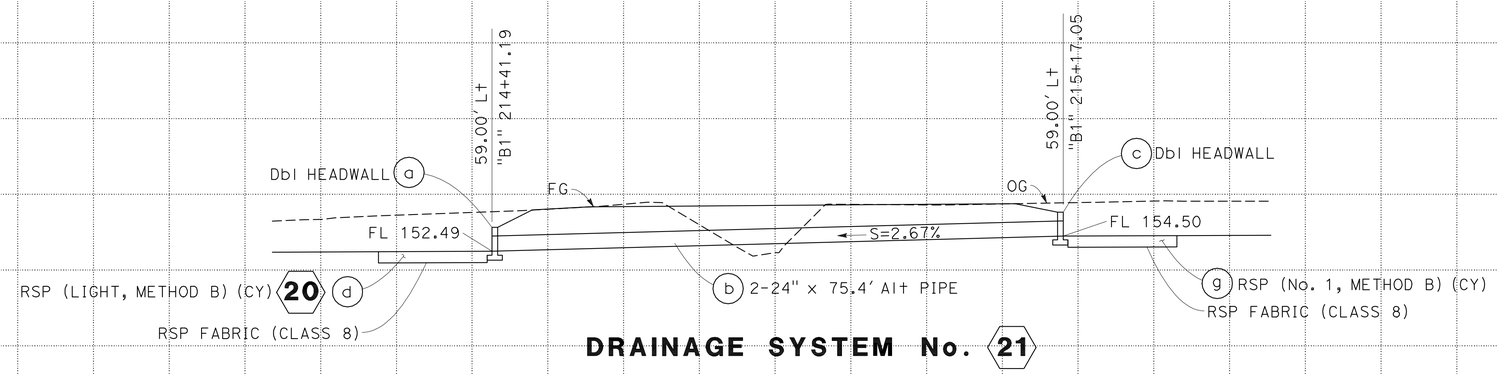

DRAINAGE SYSTEM No. 21

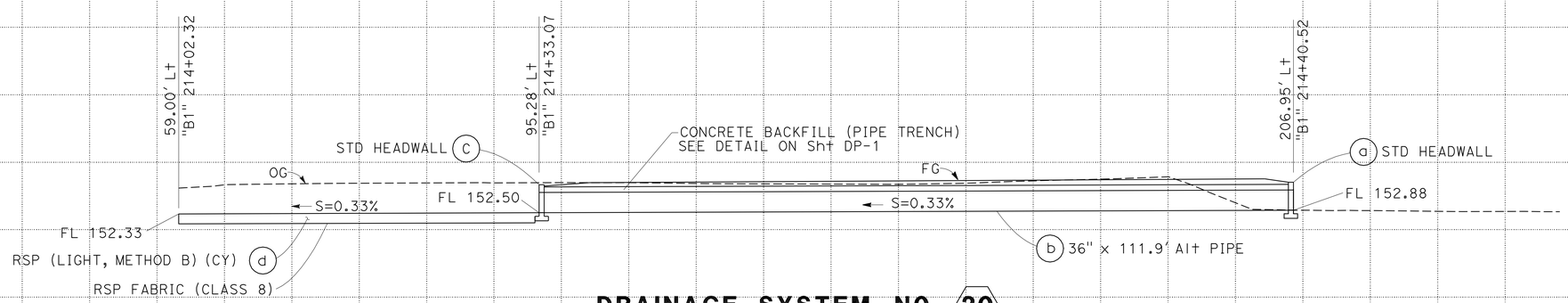

DRAINAGE SYSTEM NO. 20

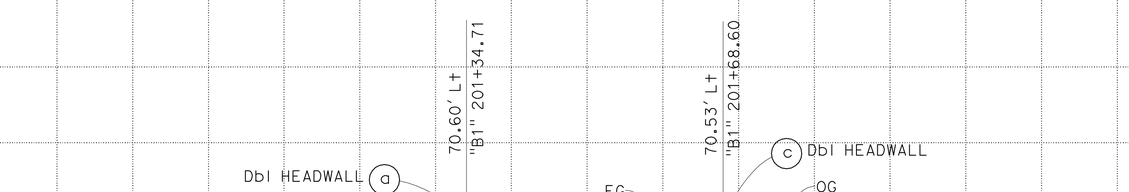

DRAINAGE SYSTEM No. 19

DRAINAGE PROFILES

SCALE: Horiz 1" = 10'
Vert 1" = 10'

DP-5

STATE OF CALIFORNIA - DEPARTMENT OF TRANSPORTATION
Caltrans DESIGN

FUNCTIONAL SUPERVISOR: RON R. KRAEMER
CALCULATED-DESIGNED BY: MARK S. LEICHTFUSS
CHECKED BY
REVISED BY
DATE REVISED

LAST REVISION 5-24-12
DATE PLOTTED => 07-JAN-2013
TIME PLOTTED => 14:36

Dist	COUNTY	ROUTE	POST MILES TOTAL PROJECT	SHEET No.	TOTAL SHEETS
05	SB	166	0.9/2.4,3.8/4.8	44	84

Mark S. Leichtfuss 5-24-12
REGISTERED CIVIL ENGINEER DATE

7-30-12
PLANS APPROVAL DATE

REGISTERED PROFESSIONAL ENGINEER MARK S. LEICHTFUSS No. 69124 Exp. 6-30-12 CIVIL STATE OF CALIFORNIA

THE STATE OF CALIFORNIA OR ITS OFFICERS OR AGENTS SHALL NOT BE RESPONSIBLE FOR THE ACCURACY OR COMPLETENESS OF SCANNED COPIES OF THIS PLAN SHEET.

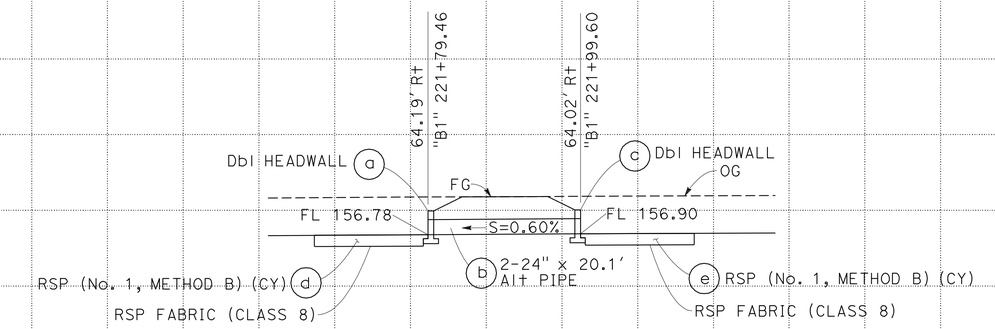

DRAINAGE SYSTEM No. 26

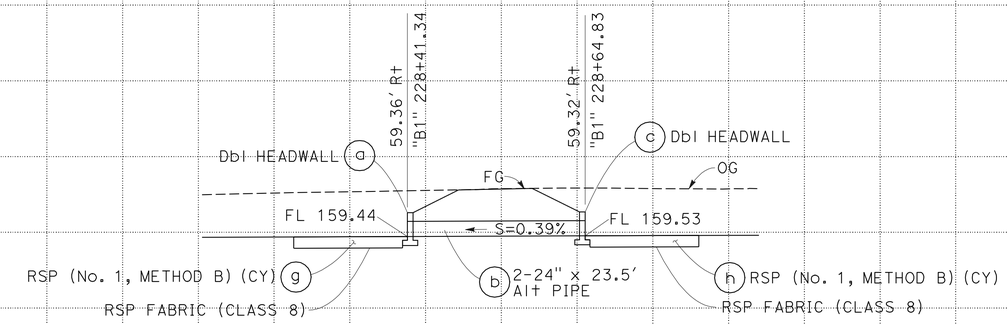

DRAINAGE SYSTEM No. 28

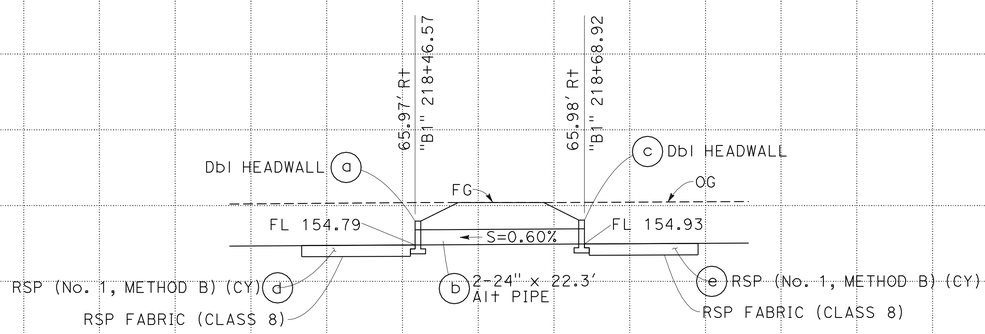

DRAINAGE SYSTEM No. 25

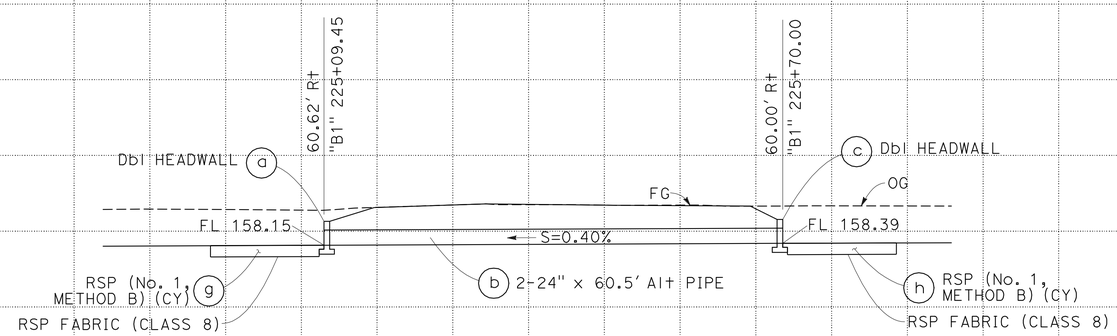

DRAINAGE SYSTEM No. 27

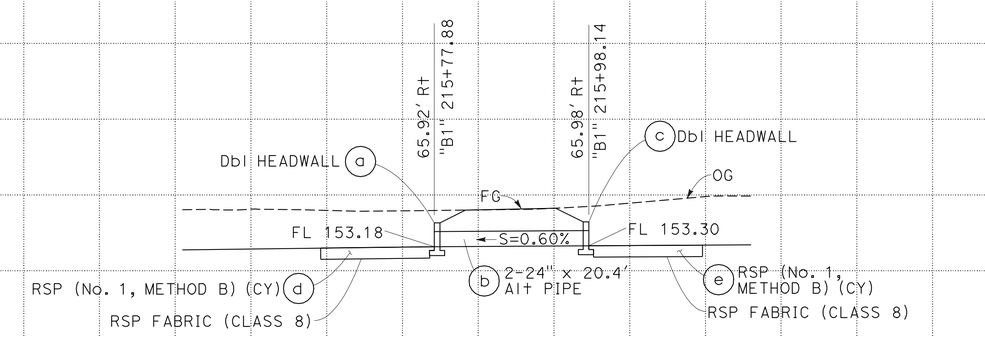

DRAINAGE SYSTEM No. 24

DRAINAGE PROFILES

SCALE: Horiz 1" = 10'
Vert 1" = 10'

DP-6

STATE OF CALIFORNIA - DEPARTMENT OF TRANSPORTATION
Caltrans®
DESIGN
FUNCTIONAL SUPERVISOR: RON R. KRAEMER
CALCULATED-DESIGNED BY: MARK S. LEICHTFUSS
CHECKED BY
REVISED BY
DATE REVISED
QUAY CHESTER

LAST REVISION 5-24-12
DATE PLOTTED => 07-JAN-2013
TIME PLOTTED => 14:36

Dist	COUNTY	ROUTE	POST MILES TOTAL PROJECT	SHEET No.	TOTAL SHEETS
05	SB	166	0.9/2.4,3.8/4.8	45	84

REGISTERED CIVIL ENGINEER 5-24-12 DATE

7-30-12
PLANS APPROVAL DATE

REGISTERED PROFESSIONAL ENGINEER MARK S. LEICHTFUSS No. 69124 Exp. 6-30-12 CIVIL STATE OF CALIFORNIA

THE STATE OF CALIFORNIA OR ITS OFFICERS OR AGENTS SHALL NOT BE RESPONSIBLE FOR THE ACCURACY OR COMPLETENESS OF SCANNED COPIES OF THIS PLAN SHEET.

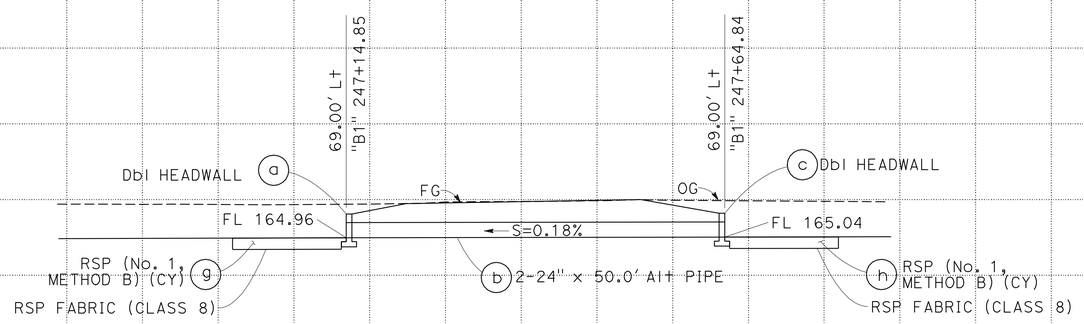

DRAINAGE SYSTEM No. 31

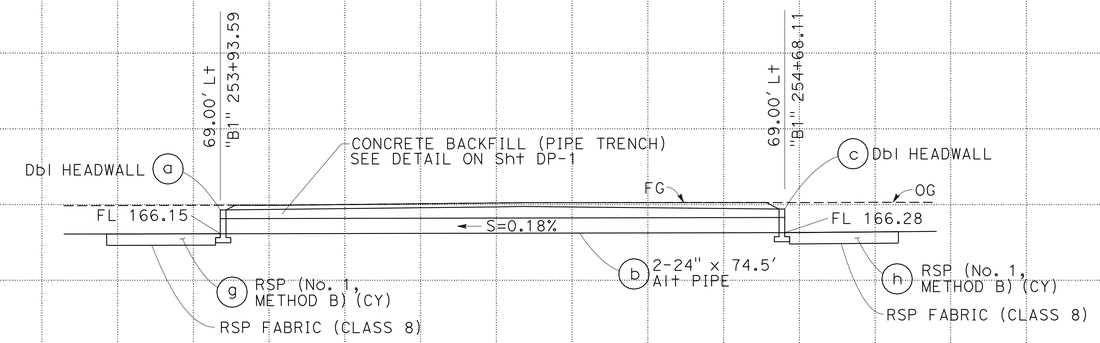

DRAINAGE SYSTEM No. 34

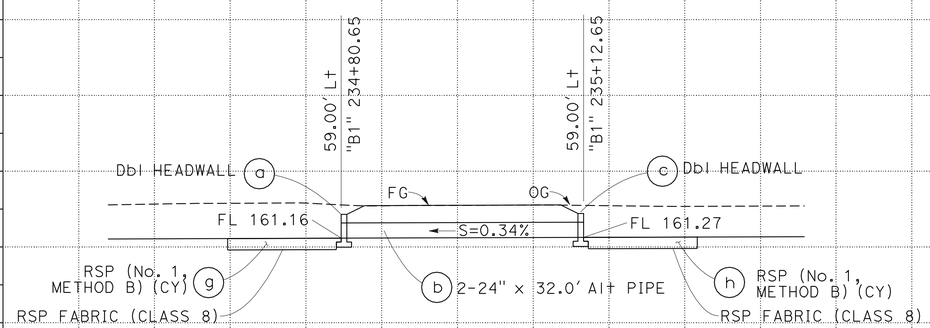

DRAINAGE SYSTEM No. 29

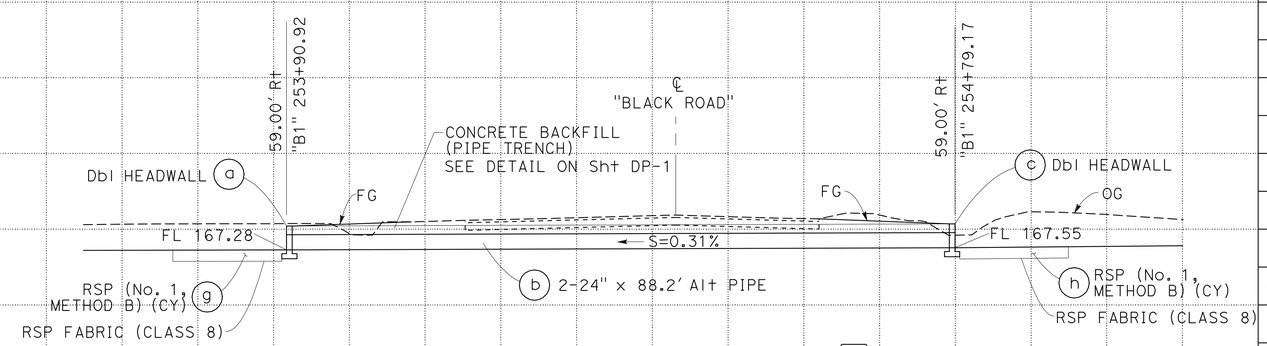

DRAINAGE SYSTEM No. 33

DRAINAGE PROFILES

SCALE: Horiz 1" = 10'
Vert 1" = 10'

DP-7

STATE OF CALIFORNIA - DEPARTMENT OF TRANSPORTATION
Caltrans
DESIGN
FUNCTIONAL SUPERVISOR: RON R. KRAEMER
CALCULATED-DESIGNED BY
CHECKED BY
REVISED BY
DATE REVISED
QUAY CHESTER
MARK S. LEICHTFUSS

LAST REVISION 5-24-12
DATE PLOTTED => 07-JAN-2013
TIME PLOTTED => 14:36

Dist	COUNTY	ROUTE	POST MILES TOTAL PROJECT	SHEET No.	TOTAL SHEETS
05	SB	166	0.9/2.4,3.8/4.8	46	84

Mark S. Leichtfuss 5-24-12
REGISTERED CIVIL ENGINEER DATE

7-30-12
PLANS APPROVAL DATE

REGISTERED PROFESSIONAL ENGINEER
MARK S. LEICHTFUSS
No. 69124
Exp. 6-30-12
CIVIL
STATE OF CALIFORNIA

THE STATE OF CALIFORNIA OR ITS OFFICERS OR AGENTS SHALL NOT BE RESPONSIBLE FOR THE ACCURACY OR COMPLETENESS OF SCANNED COPIES OF THIS PLAN SHEET.

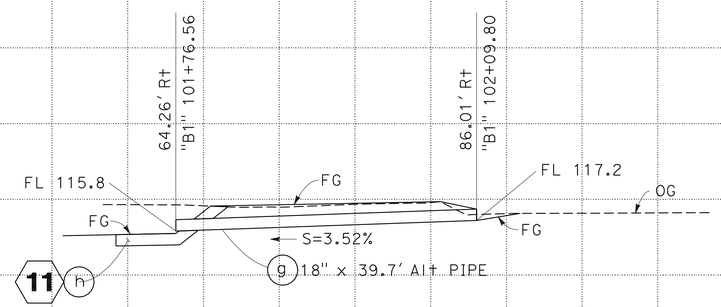

DRAINAGE SYSTEM No. 11 g

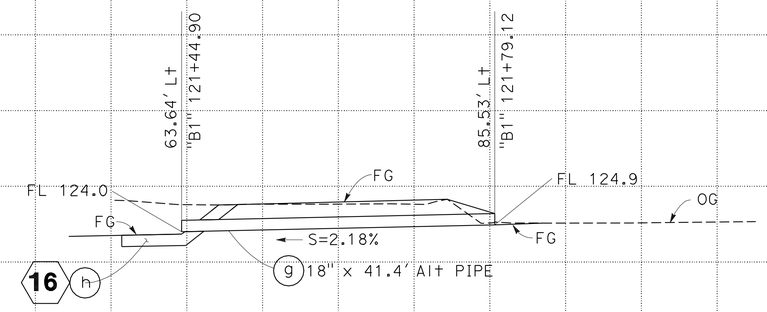

DRAINAGE SYSTEM No. 16 g

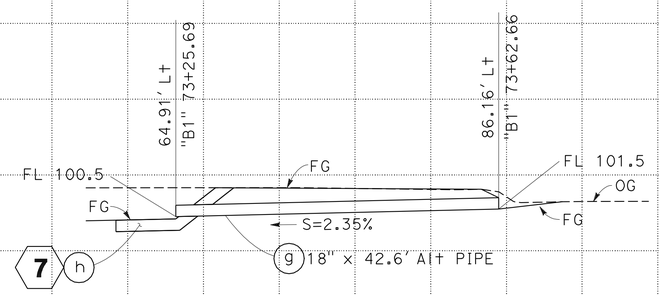

DRAINAGE SYSTEM No. 7 g

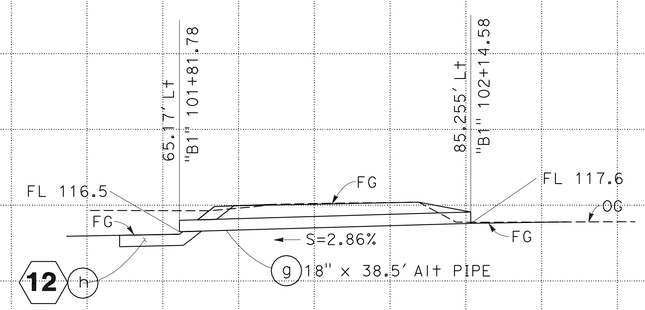

DRAINAGE SYSTEM No. 12 g

DRAINAGE PROFILES

SCALE: Horiz 1" = 10'
Vert 1" = 10'

DP-8

STATE OF CALIFORNIA - DEPARTMENT OF TRANSPORTATION
Caltrans
DESIGN
FUNCTIONAL SUPERVISOR: RON R. KRAEMER
CALCULATED-DESIGNED BY: MARK S. LEICHTFUSS
CHECKED BY
REVISED BY
DATE REVISED

LAST REVISION 5-24-12
DATE PLOTTED => 07-JAN-2013
TIME PLOTTED => 14:36

Dist	COUNTY	ROUTE	POST MILES TOTAL PROJECT	SHEET No.	TOTAL SHEETS
05	SB	166	0.9/2.4,3.8/4.8	47	84

Mark S. Leichtfuss 5-24-12
REGISTERED CIVIL ENGINEER DATE

7-30-12
PLANS APPROVAL DATE

REGISTERED PROFESSIONAL ENGINEER
MARK S. LEICHTFUSS
No. 69124
Exp. 6-30-12
CIVIL
STATE OF CALIFORNIA

THE STATE OF CALIFORNIA OR ITS OFFICERS OR AGENTS SHALL NOT BE RESPONSIBLE FOR THE ACCURACY OR COMPLETENESS OF SCANNED COPIES OF THIS PLAN SHEET.

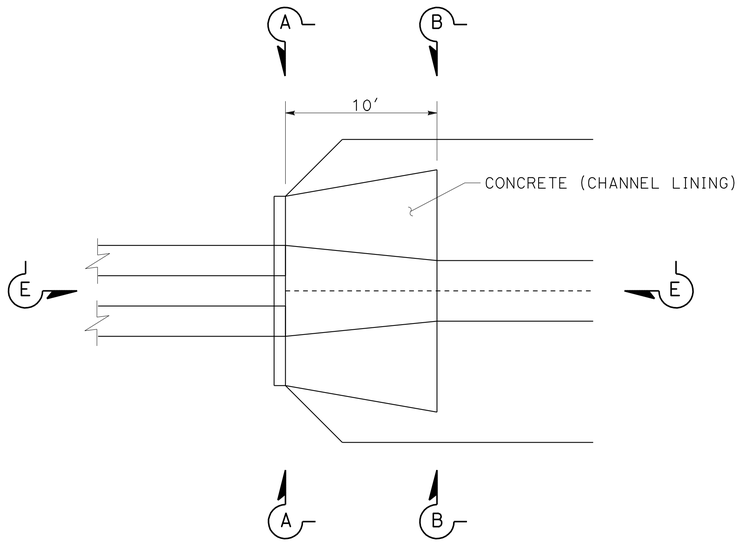

PLAN VIEW FOR INLET & OUTLET

1 f g

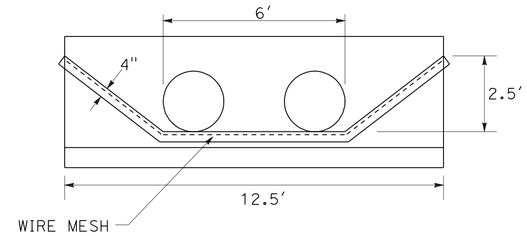

SECTION A-A
STANDARD DOUBLE HEADWALL - 24′ APC

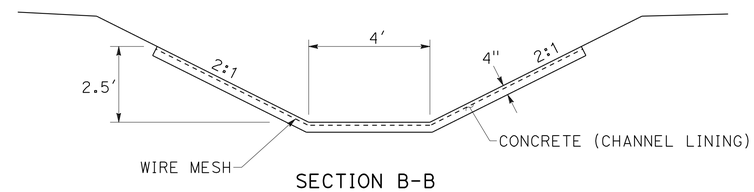

SECTION B-B

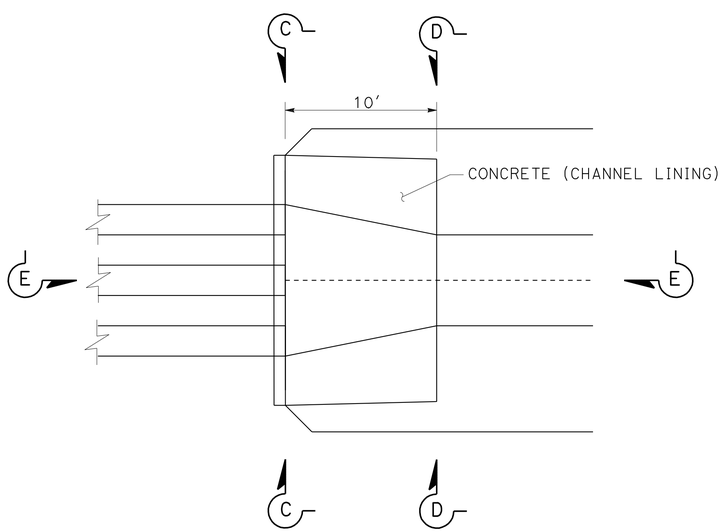

PLAN VIEW FOR INLET & OUTLET

2 g h

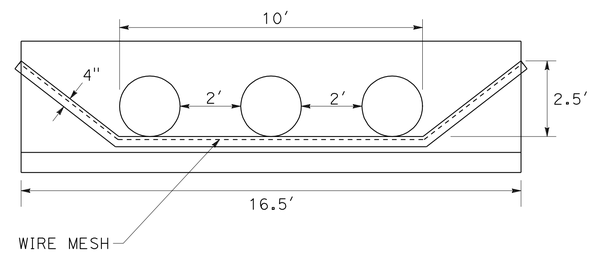

SECTION C-C
MODIFIED DOUBLE HEADWALL
NOTE: FOR DETAILS NOT SHOWN SEE Std PLAN D89.

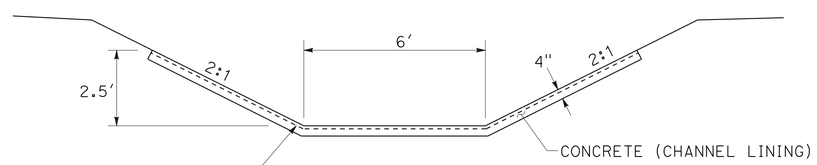

SECTION D-D

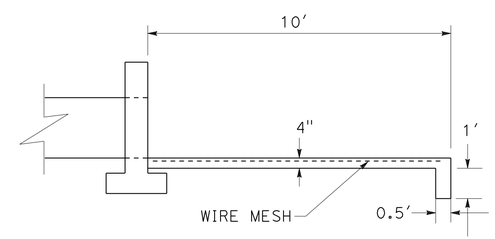

SECTION E-E

CONCRETE (CHANNEL LINING) DETAILS

DRAINAGE DETAILS
NO SCALE
DD-1

STATE OF CALIFORNIA - DEPARTMENT OF TRANSPORTATION
Caltrans®
DESIGN
FUNCTIONAL SUPERVISOR: RON R. KRAEMER
CALCULATED-DESIGNED BY: MARK S. LEICHTFUSS
CHECKED BY: STEVEN GIOVANNETTI
REVISED BY
DATE REVISED

LAST REVISION 5-24-12
DATE PLOTTED => 07-JAN-2013
TIME PLOTTED => 14:36

Dist	COUNTY	ROUTE	POST MILES TOTAL PROJECT	SHEET No.	TOTAL SHEETS
05	SB	166	0.9/2.4,3.8/4.8	48	84

Mark S. Leichtfuss 5-24-12
REGISTERED CIVIL ENGINEER DATE

7-30-12
PLANS APPROVAL DATE

REGISTERED PROFESSIONAL ENGINEER MARK S. LEICHTFUSS No. 69124 Exp. 6-30-12 CIVIL STATE OF CALIFORNIA

THE STATE OF CALIFORNIA OR ITS OFFICERS OR AGENTS SHALL NOT BE RESPONSIBLE FOR THE ACCURACY OR COMPLETENESS OF SCANNED COPIES OF THIS PLAN SHEET.

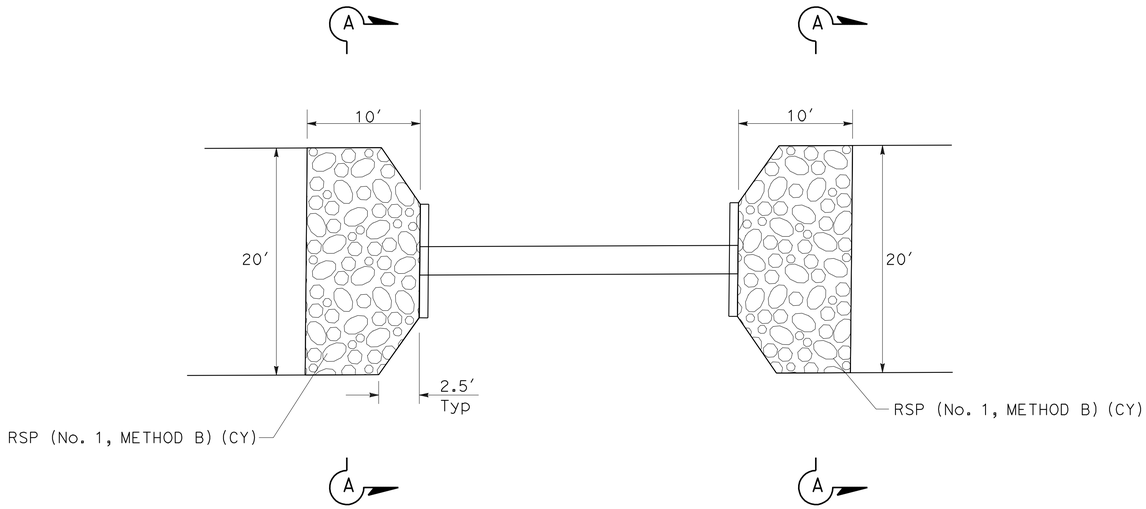

PLAN VIEW RSP INLET AND OUTLET

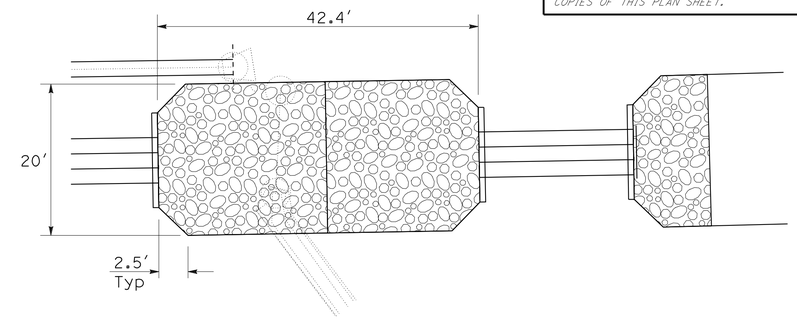

PLAN VIEW RSP FOR 24 d

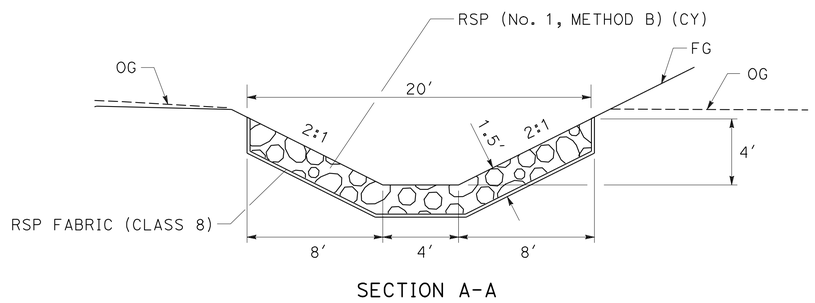

TYPICAL RSP INLET AND OUTLET FOR DITCH "D2"

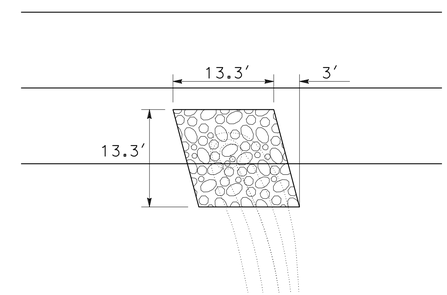

PLAN VIEW RSP FOR 30 d 35

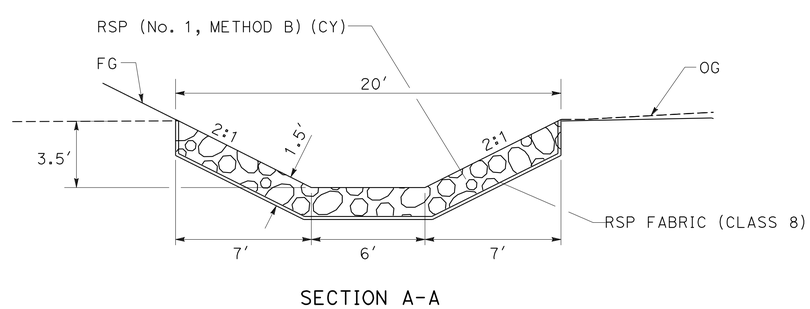

TYPICAL RSP INLET AND OUTLET FOR DITCHES "D1", "D3" & "D4"

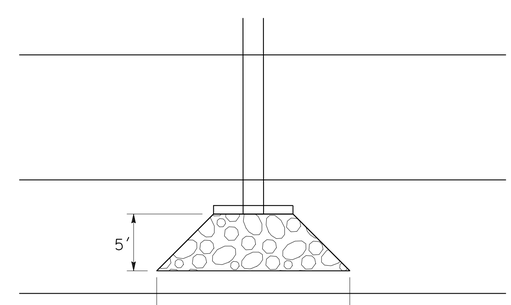

PLAN VIEW RSP FOR 3 g h

DRAINAGE DETAILS

NO SCALE

DD-2

STATE OF CALIFORNIA - DEPARTMENT OF TRANSPORTATION
Caltrans® DESIGN

FUNCTIONAL SUPERVISOR: RON R. KRAEMER

CALCULATED-DESIGNED BY: MARK S. LEICHTFUSS
CHECKED BY: STEVEN GIOVANNETTI

REVISED BY
DATE REVISED

LAST REVISION 5-24-12
DATE PLOTTED => 07-JAN-2013
TIME PLOTTED => 14:36

Dist	COUNTY	ROUTE	POST MILES TOTAL PROJECT	SHEET No.	TOTAL SHEETS
05	SB	166	0.9/2.4,3.8/4.8	49	84

REGISTERED CIVIL ENGINEER 5-24-12 DATE

7-30-12
PLANS APPROVAL DATE

REGISTERED PROFESSIONAL ENGINEER MARK S. LEICHTFUSS No. 69124 Exp. 6-30-12 CIVIL STATE OF CALIFORNIA

THE STATE OF CALIFORNIA OR ITS OFFICERS OR AGENTS SHALL NOT BE RESPONSIBLE FOR THE ACCURACY OR COMPLETENESS OF SCANNED COPIES OF THIS PLAN SHEET.

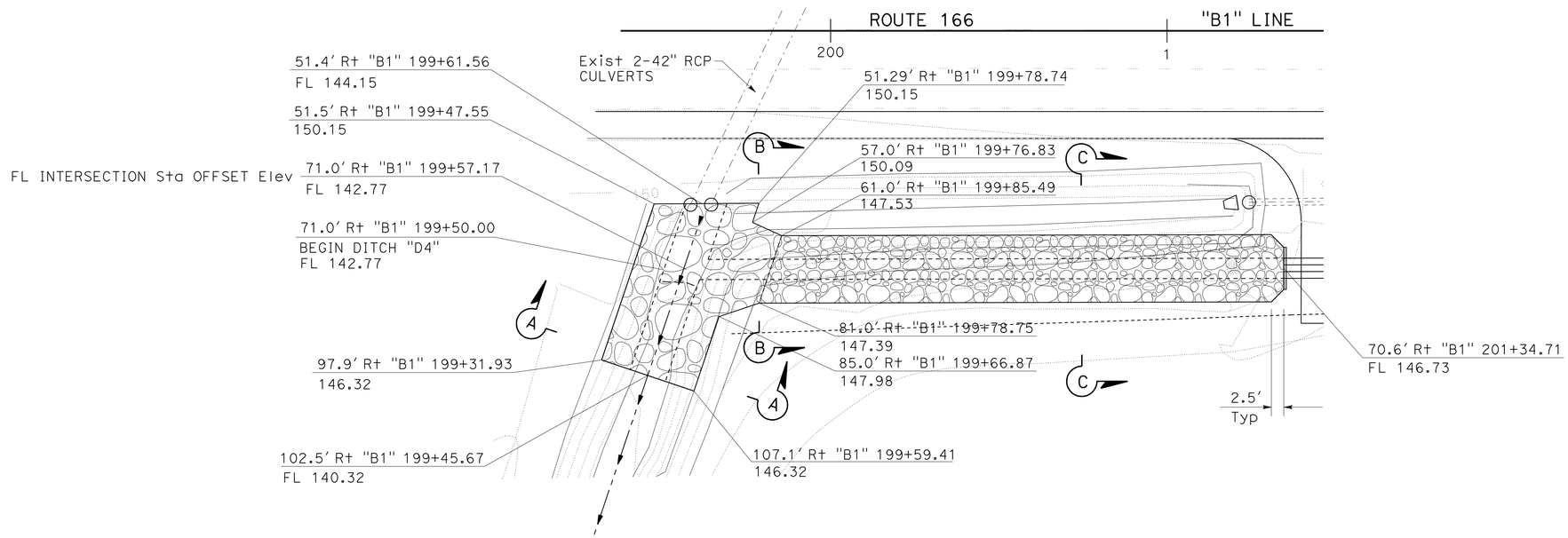

PLAN VIEW DRAINAGE SYSTEM No. 18 a b

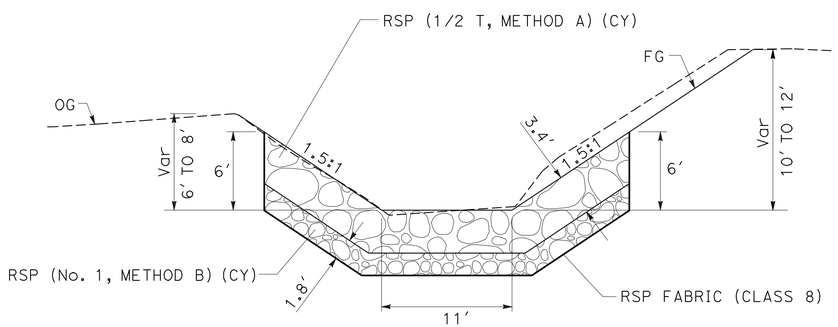

SECTION A-A
NO SCALE

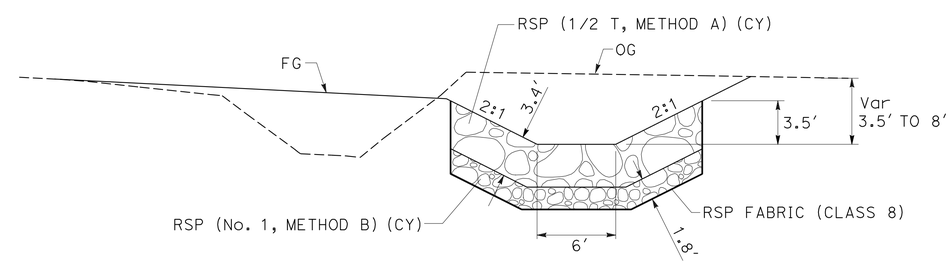

SECTION B-B
"B1" 199+66.87 TO "B1" 199+85.49
NO SCALE

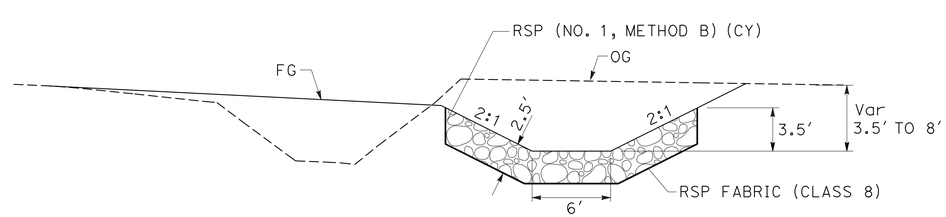

SECTION C-C
"B1" 199+78.75 TO "B1" 201+34.71
NO SCALE

DRAINAGE DETAILS

SCALE: 1" = 20'

DD-3

STATE OF CALIFORNIA - DEPARTMENT OF TRANSPORTATION
Caltrans®
DESIGN

FUNCTIONAL SUPERVISOR: RON R. KRAEMER
CALCULATED-DESIGNED BY: QUAY CHESTER
CHECKED BY: MARK S. LEICHTFUSS
REVISED BY
DATE REVISED

LAST REVISION 5-24-12
DATE PLOTTED => 07-JAN-2013
TIME PLOTTED => 14:36

Dist	COUNTY	ROUTE	POST MILES TOTAL PROJECT	SHEET No.	TOTAL SHEETS
05	SB	166	0.9/2.4,3.8/4.8	50	84

REGISTERED CIVIL ENGINEER 5-24-12 DATE

7-30-12
PLANS APPROVAL DATE

REGISTERED PROFESSIONAL ENGINEER MARK S. LEICHTFUSS No. 69124 Exp. 6-30-12 CIVIL STATE OF CALIFORNIA

THE STATE OF CALIFORNIA OR ITS OFFICERS OR AGENTS SHALL NOT BE RESPONSIBLE FOR THE ACCURACY OR COMPLETENESS OF SCANNED COPIES OF THIS PLAN SHEET.

NOTE:

FOR ACCURATE RIGHT OF WAY AND ACCESS DATA, CONTACT RIGHT OF WAY ENGINEERING AT THE DISTRICT OFFICE.

CURVE DATA

No. ⊕	R	Δ	T	L
1	30′	86°26′06″	28.19′	45.26′

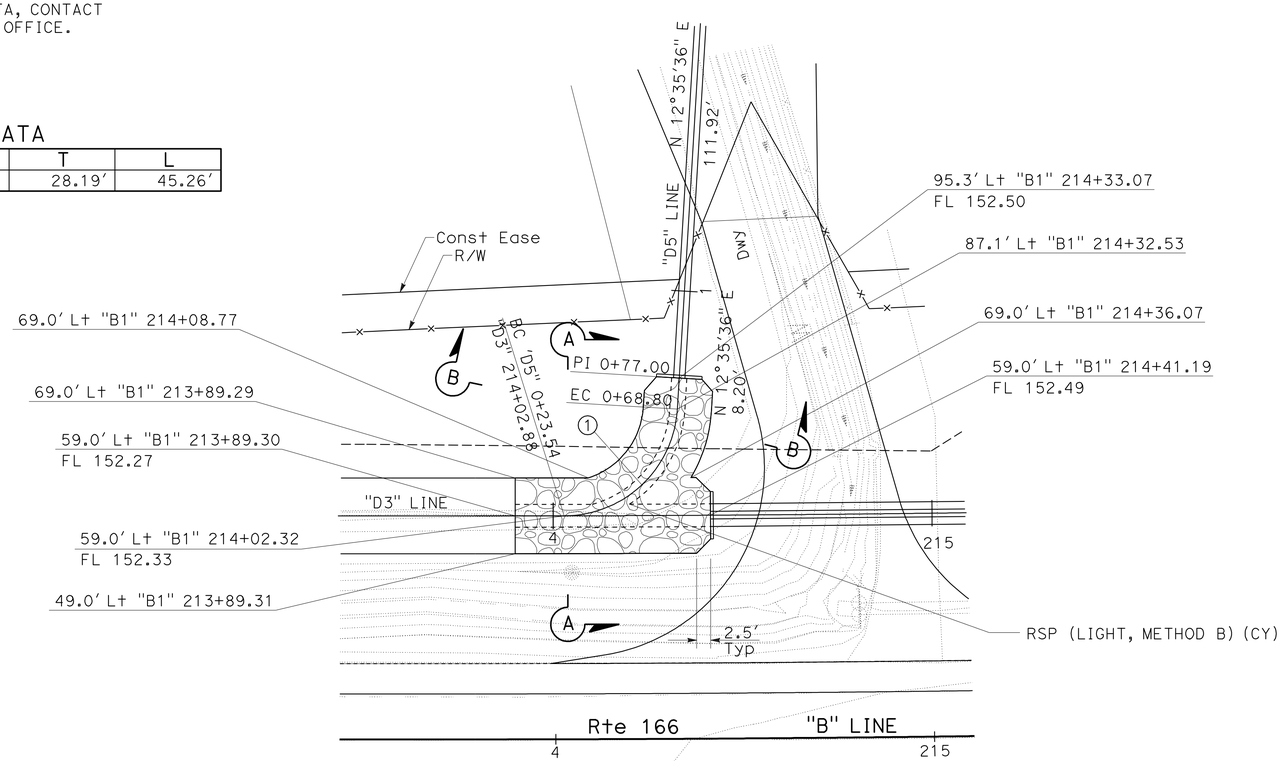

PLAN VIEW DRAINAGE SYSTEM 20 d

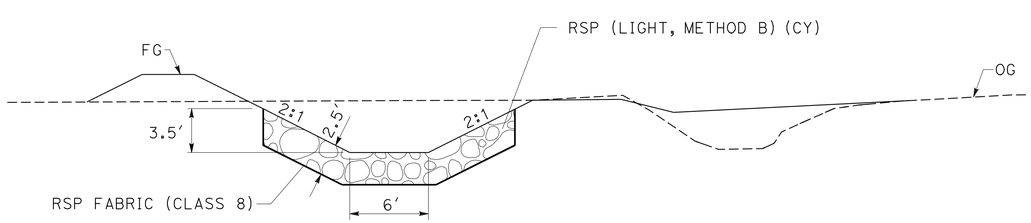

SECTION A-A
NO SCALE

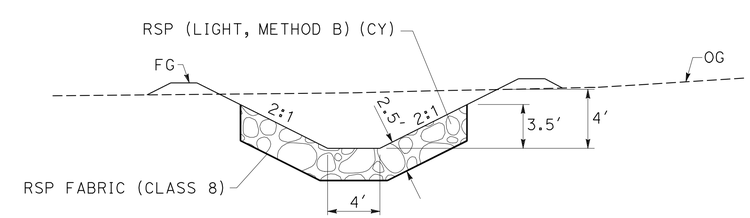

SECTION B-B
NO SCALE

DRAINAGE DETAILS

SCALE: 1" = 20′

DD-4

STATE OF CALIFORNIA - DEPARTMENT OF TRANSPORTATION
Caltrans®
DESIGN
FUNCTIONAL SUPERVISOR: RON R. KRAEMER
CALCULATED-DESIGNED BY / CHECKED BY
QUAY CHESTER
MARK S. LEICHTFUSS
REVISED BY / DATE REVISED

LAST REVISION 5-24-12
DATE PLOTTED => 07-JAN-2013
TIME PLOTTED => 14:36

Dist	COUNTY	ROUTE	POST MILES TOTAL PROJECT	SHEET No.	TOTAL SHEETS
05	SB	166	0.9/2.4,3.8/4.8	51	84

Mark S. Leichtfuss 5-24-12
REGISTERED CIVIL ENGINEER DATE

7-30-12
PLANS APPROVAL DATE

REGISTERED PROFESSIONAL ENGINEER MARK S. LEICHTFUSS No. 69124 Exp. 6-30-12 CIVIL STATE OF CALIFORNIA

THE STATE OF CALIFORNIA OR ITS OFFICERS OR AGENTS SHALL NOT BE RESPONSIBLE FOR THE ACCURACY OR COMPLETENESS OF SCANNED COPIES OF THIS PLAN SHEET.

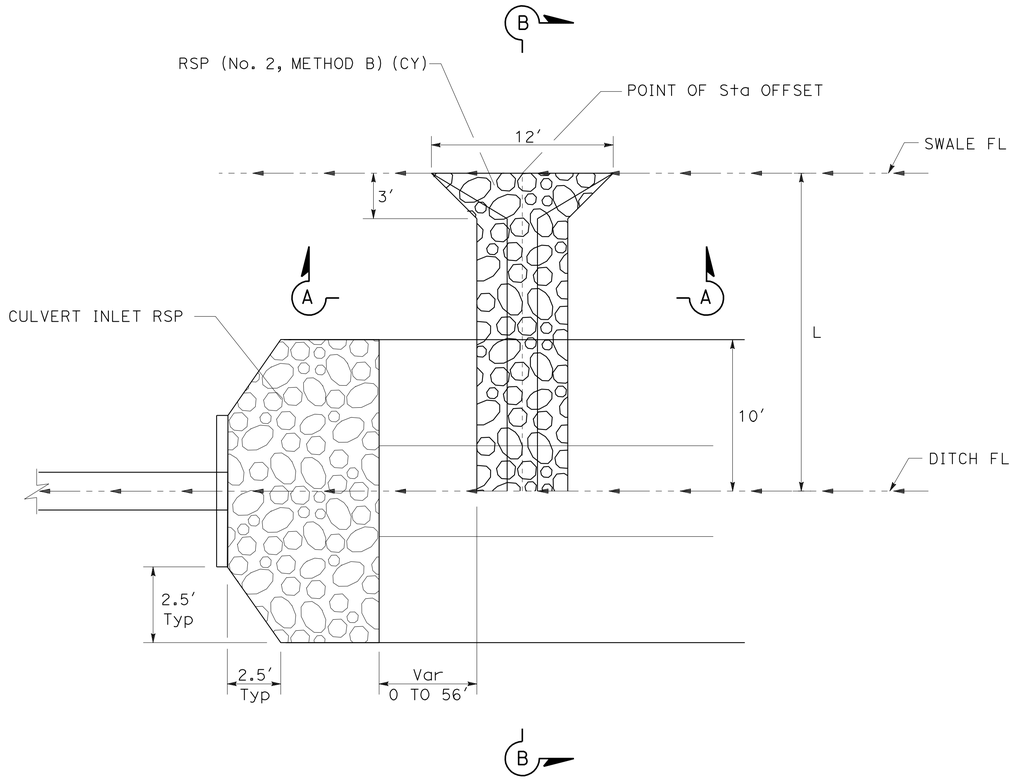

PLAN VIEW RSP (NO. 2, METHOD B)

RSP (No. 2, METHOD B)

STATION	OFFSET	LENGTH (L) Ft	*DS No.
"B" 48+20.00	38.0′ Lt	21.0	2
"B" 48+20.00	38.0′ Rt	21.0	1
"B" 59+71.95	38.0′ Rt	21.0	4
"B" 63+47.03	38.0′ Lt	21.0	5
"B" 71+82.04	38.0′ Rt	21.0	6
"B" 73+73.50	38.0′ Lt	21.0	7
"B" 80+15.56	38.0′ Rt	21.0	8
"B" 91+35.67	38.0′ Rt	21.0	9
"B" 91+50.70	38.0′ Lt	21.0	10
"B"102+24.42	37.6′ Lt	21.0	12
"B" 102+42.78	38.0′ Rt	21.0	11
"B" 105+52.51	38.0′ Lt	14.3	13
"B" 112+14.81	38.0′ Lt	21.0	14
"B" 113+29.89	38.0′ Rt	21.0	15
"B" 208+21.87	38.0′ Lt	16.4	36
"B" 215+30.11	37.6′ Lt	21.0	20
"B"232+10.00	38.0′ Rt	21.0	37
"B" 235+25.65	38.0′ Lt	21.0	29
"B" 248+34.00	40.8′ Lt	28.1	31

*DRAINAGE SYSTEM NUMBER

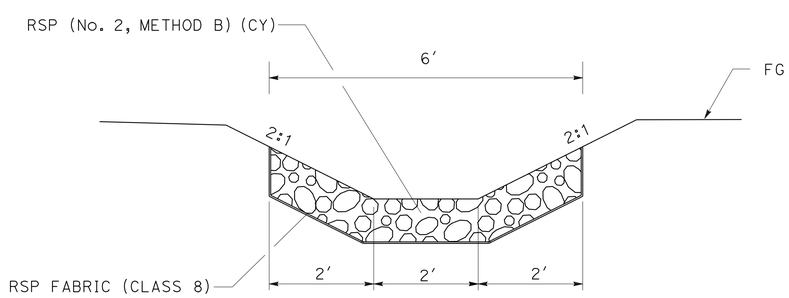

SECTION A-A

TYPICAL CROSS SECTION

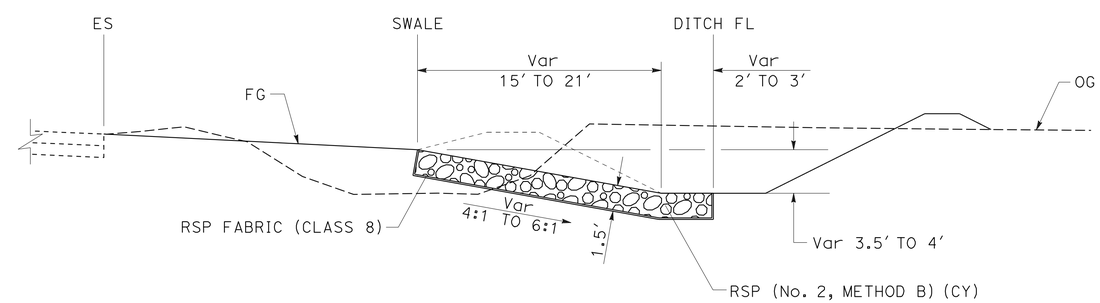

SECTION B-B

DRAINAGE DETAILS

NO SCALE

DD-5

STATE OF CALIFORNIA - DEPARTMENT OF TRANSPORTATION
Caltrans®
DESIGN

FUNCTIONAL SUPERVISOR: RON R. KRAEMER
CALCULATED-DESIGNED BY: MARK LEICHTFUSS
CHECKED BY: STEVEN GIOVANNETTI
REVISED BY
DATE REVISED

LAST REVISION 5-24-12
DATE PLOTTED => 07-JAN-2013
TIME PLOTTED => 14:52

Dist	COUNTY	ROUTE	POST MILES TOTAL PROJECT	SHEET No.	TOTAL SHEETS
05	SB	166	0.9/2.4,3.8/4.8	52	84

REGISTERED CIVIL ENGINEER 5-24-12 DATE

7-30-12
PLANS APPROVAL DATE

REGISTERED PROFESSIONAL ENGINEER MARK S. LEICHTFUSS No. 69124 Exp. 6-30-12 CIVIL STATE OF CALIFORNIA

THE STATE OF CALIFORNIA OR ITS OFFICERS OR AGENTS SHALL NOT BE RESPONSIBLE FOR THE ACCURACY OR COMPLETENESS OF SCANNED COPIES OF THIS PLAN SHEET.

DRAINAGE QUANTITIES

LAYOUT PLAN SHEET No.	DRAINAGE SYSTEM No. ⬡	DRAINAGE UNIT No. ○	REMOVE HEADWALL	REMOVE CULVERT (LF)	REMOVE PIPE (LF)	REMOVE FES	REMOVE RCB CULVERT (LF)	CONCRETE BACKFILL (PIPE TRENCH)	MINOR CONCRETE (MINOR STRUCTURE)	CONCRETE (CHANNEL LINING)	BAR REINFORCING STEEL	ALTERNATIVE PIPE CULVERT 36"	30"	24"	18"	ROCK SLOPE PROTECTION FABRIC (CLASS 8)	(LIGHT, METHOD B) (CY)	(No. 1, METHOD B) (CY)	(No. 2, METHOD B) (CY)	(N) HEIGHT OF COVER *	DESCRIPTION
			EA	LF	LF	EA	LF	CY	CY	CY	LB	LF	LF	LF	LF	SQYD	CY	CY	CY	LF	
L-1	1	a							1.72												24" Std Dbl HEADWALL
		b						62.4			675			196							2-24" x 98.0' Alt PIPE
		c							1.72												24" Std Dbl HEADWALL
		d				2															
		e		233.0																3.5	Exist 2-18" x 116.5' RCP
		f								1.9											SEE Sht DD-1 FOR DETAILS
		g								1.9											SEE Sht DD-1 FOR DETAILS
		h														14.9			7.5		SEE Sht DD-5 FOR DETAILS
		i	1																		
		j			5.0																Exist 18" x 5' CMP
L-1	2	a							2.18												MODIFIED Dbl HW SEE Sht DD-1
		b						76.4			853			240							3-24" x 80.0' Alt PIPE
		c							2.18												MODIFIED Dbl HW SEE Sht DD-1
		d	1																		
		e					71.0														Exist 4' x 2' RBC
		f	1																		
		g								2.2											SEE Sht DD-1 FOR DETAILS
		h								2.2											SEE Sht DD-1 FOR DETAILS
		i														14.9			7.5		SEE Sht DD-5 FOR DETAILS
L-1	3	a							0.91												18" Std SINGLE HEADWALL
		b						16.6							103.0						
		c							0.91												18" Std SINGLE HEADWALL
		d	1																		
		e		59.5																3.5	Exist 18" x 59.5' CMP
		f	1																		
		g														6.7			3.3		
		h														6.7			3.3		
L-2	4	a							1.52												30" Std SINGLE HEADWALL
		b						8.3					32.2								
		c							1.52												30" Std SINGLE HEADWALL
		d	1																		
		e		20.8																3.0	Exist 24" CMP
		f	1																		
		g														24.0		12.0			
		h														24.0		12.0			
		i														14.9			7.5		SEE Sht DD-5 FOR DETAILS
		j				1															
		k			14.0																Exist 12" x 14' RCP
L-2	5	a							1.72												24" Std Dbl HEADWALL
		b												49.2							2-24" x 24.6' Alt PIPE
		c							1.72												24" Std Dbl HEADWALL
		d	1																		Exist 24" Dbl HEADWALL
		e		42.0																3.0	Exist 2-24" CMP
		f	1																		Exist 24" Dbl HEADWALL
		g														24.0		12.0			
		h														24.0		12.0			
		i														14.9			7.5		SEE Sht DD-5 FOR DETAILS
		j			10.0																Exist 18" x 10' RCP
Sht TOTAL			9	355.3	29.0	3	71.0	163.7	16.10	8.2	1,528		32.2	485.2	103.0	169.0		48.0	36.6		

(N) NOT A SEPARATE PAY ITEM, FOR INFORMATION ONLY.
* DEPTH MEASURED FROM EXISTING GRADE TO PIPE FLOW LINE.

STATE OF CALIFORNIA - DEPARTMENT OF TRANSPORTATION
Caltrans® DESIGN
FUNCTIONAL SUPERVISOR: RON R. KRAEMER
CALCULATED-DESIGNED BY: MARK S. LEICHTFUSS
CHECKED BY
REVISED BY
DATE REVISED
QUAY CHESTER

DRAINAGE QUANTITIES
DQ-1

LAST REVISION 5-24-12
DATE PLOTTED => 07-JAN-2013
TIME PLOTTED => 14:37

Dist	COUNTY	ROUTE	POST MILES TOTAL PROJECT	SHEET No.	TOTAL SHEETS
05	SB	166	0.9/2.4,3.8/4.8	53	84

REGISTERED CIVIL ENGINEER 5-24-12 DATE

7-30-12
PLANS APPROVAL DATE

REGISTERED PROFESSIONAL ENGINEER MARK S. LEICHTFUSS No. 69124 Exp. 6-30-12 CIVIL STATE OF CALIFORNIA

THE STATE OF CALIFORNIA OR ITS OFFICERS OR AGENTS SHALL NOT BE RESPONSIBLE FOR THE ACCURACY OR COMPLETENESS OF SCANNED COPIES OF THIS PLAN SHEET.

DRAINAGE QUANTITIES

LAYOUT PLAN SHEET No.	DRAINAGE SYSTEM No. ⬡	DRAINAGE UNIT No. ○	REMOVE HEADWALL EA	REMOVE CULVERT (LF) LF	REMOVE PIPE (LF) LF	REMOVE FES EA	CONCRETE BACKFILL (PIPE TRENCH) CY	MINOR CONCRETE (MINOR STRUCTURE) CY	BAR REINFORCING STEEL LB	ALTERNATIVE PIPE CULVERT 36" LF	30" LF	24" LF	18" LF	ROCK SLOPE PROTECTION FABRIC (CLASS 8) SQYD	(LIGHT, METHOD B) (CY) CY	(No. 1, METHOD B) (CY) CY	(No. 2, METHOD B) (CY) CY	(N) HEIGHT OF COVER * LF	DESCRIPTION
L-2	6	a						1.52											30" Std SINGLE HEADWALL
		b					5.7				22.3								
		c						1.52											30" Std SINGLE HEADWALL
		d												24.0		12.0			
		e												24.0		12.0			
		f												14.9			7.5		SEE Sht DD-5 FOR DETAILS
L-3	7	a						1.72											24" Std Dbl HEADWALL
		b										64.0							2-24" x 32.0' Alt PIPE
		c						1.72											24" Std Dbl HEADWALL
		d	1																
		e		53.6														2.9	Exist 2-24" x 26.8' CMP
		f	1																
		g											42.6						
		h												24.0		12.0			
		i												24.0		12.0			
		j												14.9			7.5		SEE Sht DD-5 FOR DETAILS
		k			36.0														Exist 12" x 36.0' RCP
		l			36.0														Exist 8" x 36.0' CMP
L-3	8	a						1.52											30" Std SINGLE HEADWALL
		b					5.1				20.0								
		c						1.52											30" Std SINGLE HEADWALL
		d	1																
		e		21.0														3.2	Exist 24" x 21.0' CMP
		f	1																
		g												24.0		12.0			
		h												24.0		12.0			
		i												14.9			7.5		SEE Sht DD-5 FOR DETAILS
		j	1																
		k			8.4														Exist 12" x 8.4' RCP
L-4	9	a						1.52											30" Std SINGLE HEADWALL
		b					5.7				22.0								
		c						1.52											30" Std SINGLE HEADWALL
		d	1																
		e		20.7														3.2	Exist 24"x20.7' CMP
		f	1																
		g												24.0		12.0			
		h												24.0		12.0			
		i												14.9			7.5		SEE Sht DD-5 FOR DETAILS
		j	1																
		k			6.5														Exist 12" x 6.5' RCP
L-4	10	a						1.72											24" Std Dbl HEADWALL
		b										66.0							2-24" x 33.0' Alt PIPE
		c						1.72											24" Std Dbl HEADWALL
		d	1																
		e		30.4														3.5	Exist 24" x 30.4' CMP
		f	1																
		g												24.0		12.0			
		h												24.0		12.0			
		i												14.9			7.5		SEE Sht DD-5 FOR DETAILS
Sht TOTAL			10	125.7	86.9		16.5	16.00			64.3	130.0	42.6	314.5		120.0	37.5		

(N) NOT A SEPARATE PAY ITEM, FOR INFORMATION ONLY.
* DEPTH MEASURED FROM EXISTING GRADE TO PIPE FLOW LINE.

STATE OF CALIFORNIA - DEPARTMENT OF TRANSPORTATION
Caltrans
DESIGN
FUNCTIONAL SUPERVISOR: RON R. KRAEMER
CALCULATED-DESIGNED BY: MARK S. LEICHTFUSS
CHECKED BY
REVISED BY
DATE REVISED
QUAY CHESTER

LAST REVISION 5-24-12
DATE PLOTTED => 07-JAN-2013
TIME PLOTTED => 14:37

DRAINAGE QUANTITIES
DQ-2

Dist	COUNTY	ROUTE	POST MILES TOTAL PROJECT	SHEET No.	TOTAL SHEETS
05	SB	166	0.9/2.4,3.8/4.8	54	84

REGISTERED CIVIL ENGINEER 5-24-12 DATE

7-30-12
PLANS APPROVAL DATE

REGISTERED PROFESSIONAL ENGINEER MARK S. LEICHTFUSS No. 69124 Exp. 6-30-12 CIVIL STATE OF CALIFORNIA

THE STATE OF CALIFORNIA OR ITS OFFICERS OR AGENTS SHALL NOT BE RESPONSIBLE FOR THE ACCURACY OR COMPLETENESS OF SCANNED COPIES OF THIS PLAN SHEET.

DRAINAGE QUANTITIES

LAYOUT PLAN SHEET No.	DRAINAGE SYSTEM No. ⬡	DRAINAGE UNIT No. ○	REMOVE HEADWALL	REMOVE CULVERT (LF)	REMOVE PIPE (LF)	REMOVE FES	CONCRETE BACKFILL (PIPE TRENCH)	MINOR CONCRETE (MINOR STRUCTURE)	BAR REINFORCING STEEL	ALTERNATIVE PIPE CULVERT 36"	30"	24"	18"	ROCK SLOPE PROTECTION FABRIC (CLASS 8)	(LIGHT, METHOD B) (CY)	(No. 1, METHOD B) (CY)	(No. 2, METHOD B) (CY)	(N) HEIGHT OF COVER *	DESCRIPTION
			EA	LF	LF	EA	CY	CY	LB	LF	LF	LF	LF	SQYD	CY	CY	CY	LF	
L-4	11	a						1.52											30" Std SINGLE HEADWALL
		b					12.3				48.0								30" x 48.0' Alt PIPE
		c						1.52											30" Std SINGLE HEADWALL
		d	1																
		e		30.4														2.3	Exist 24" x 30.4' CMP
		f	1																
		g											39.7						
		h												24.0		12.0			
		i												24.0		12.0			
		j												14.9			7.5		SEE Sht DD-5 FOR DETAILS
		k		28.0															Exist 18" x 28.0' CMP
L-4	12	a						1.72											24" Std Dbl HEADWALL
		b										52.0							2-24" x 26.0' Alt PIPE
		c						1.72											24" Std Dbl HEADWALL
		d	1																
		e		21.0														3.0	Exist 24" x 21.0' CMP
		f	1																
		g											38.5						
		h												24.0		12.0			
		i												24.0		12.0			
		j												14.9			7.5		SEE Sht DD-5 FOR DETAILS
L-5	13	a						1.72											24" Std Dbl HEADWALL
		b										232.0							2-24" x 116.0' Alt PIPE
		c						1.72											24" Std Dbl HEADWALL
		d	1																
		e		41.3														3.0	Exist 24" x 41.3' CMP
		f	1																
		g												24.0		12.0			
		h												24.0		12.0			
		i												14.9			7.5		SEE Sht DD-5 FOR DETAILS
		j	1																
L-5	14	a						1.72											24" Std Dbl HEADWALL
		b										49.4							2-24" x 24.7' Alt PIPE
		c						1.72											24" Std Dbl HEADWALL
		d	1																
		e		41.1														2.2	Exist 24" x 41.1' CMP
		f	1																
		g												24.0		12.0			
		h												24.0		12.0			
		i												14.9			7.5		SEE Sht DD-5 FOR DETAILS
Sht TOTAL			9	161.8			12.3	13.36			48.0	333.4	78.2	251.6		96.0	30		

(N) NOT A SEPARATE PAY ITEM, FOR INFORMATION ONLY.

* DEPTH MEASURED FROM EXISTING GRADE TO PIPE FLOW LINE.

STATE OF CALIFORNIA - DEPARTMENT OF TRANSPORTATION

Caltrans®

DESIGN

FUNCTIONAL SUPERVISOR: RON R. KRAEMER

CALCULATED-DESIGNED BY: QUAY CHESTER

CHECKED BY: MARK S. LEICHTFUSS

REVISED BY

DATE REVISED

LAST REVISION 5-24-12

DATE PLOTTED => 07-JAN-2013
TIME PLOTTED => 14:37

DRAINAGE QUANTITIES

DQ-3

Dist	COUNTY	ROUTE	POST MILES TOTAL PROJECT	SHEET No.	TOTAL SHEETS
05	SB	166	0.9/2.4,3.8/4.8	55	84

REGISTERED CIVIL ENGINEER 5-24-12 DATE

7-30-12
PLANS APPROVAL DATE

REGISTERED PROFESSIONAL ENGINEER MARK S. LEICHTFUSS No. 69124 Exp. 6-30-12 CIVIL STATE OF CALIFORNIA

THE STATE OF CALIFORNIA OR ITS OFFICERS OR AGENTS SHALL NOT BE RESPONSIBLE FOR THE ACCURACY OR COMPLETENESS OF SCANNED COPIES OF THIS PLAN SHEET.

DRAINAGE QUANTITIES

LAYOUT PLAN SHEET No.	DRAINAGE SYSTEM No. ⬡	DRAINAGE UNIT No. ○	REMOVE HEADWALL	REMOVE CULVERT (LF)	REMOVE PIPE (LF)	REMOVE FES	CONCRETE BACKFILL (PIPE TRENCH)	MINOR CONCRETE (MINOR STRUCTURE)	BAR REINFORCING STEEL	ALTERNATIVE PIPE CULVERT				ROCK SLOPE PROTECTION					(N) *	DESCRIPTION
										36"	30"	24"	18"	FABRIC (CLASS B)	(1/2 T, METHOD A) (CY)	(LIGHT, METHOD B) (CY)	(No.1, METHOD B) (CY)	(No.2, METHOD B) (CY)	HEIGHT OF COVER	
			EA	LF	LF	EA	CY	CY	LB	LF	LF	LF	LF	SQYD	CY	CY	CY	CY	LF	
L-5	15	a						1.52												30" Std SINGLE HEADWALL
		b					7.2				28.0									
		c						1.52												30" Std SINGLE HEADWALL
		d	1																	
		e		27.9															2.6	Exist 24" x 27.9' CMP
		f	1																	
		g												24.0			12.0			
		h												24.0			12.0			
		i												14.9				7.5		SEE Sht DD-5 FOR DETAILS
		j		46.0																Exist 24" x 46.0' HDPE
L-6	16	a						1.20												24" Std SINGLE HEADWALL
		b										30.0								
		c						1.20												24" Std SINGLE HEADWALL
		d	1																	
		e		36.5															3.3	Exist 24" x 36.5' CMP
		f	1																	
		g											41.4							
		h												24.0			12.0			
		i												24.0			12.0			
		j	1																	
		k		46.4																Exist 12" x 46.4' PP
		l		51.3																Exist 12" x 51.3' PP
L-6	17	a						1.20												24" Std SINGLE HEADWALL
		b										24.0								
		c						1.20												24" Std SINGLE HEADWALL
		d	1																	
		e		20.3															2.9	Exist 24" x 20.3' CMP
		f	1																	
		g												24.0			12.0			
		h												24.0			12.0			
		i			40.0															Exist 2-8" x 20.0' CMP
L-7	18	a												318.6	254.3		134.6			
		b												459.4			304.9			
L-7	19	a						1.72												24" Std Dbl HEADWALL
		b										67.8								2-24" x 33.9' Alt PIPE
		c						1.72												24" Std Dbl HEADWALL
		d				1														
		e		56.0															6.0	Exist 24" x 56.0' CMP
		f				1														
		g												24.0			12.0			
		h			27.0															Exist 12" x 27.0' PP
		i			22.4															Exist 12" x 22.4' PP
L-8		j			20.0															Exist 12" x 20.0' PP
Sht TOTAL			7	284.4	109.4	2	7.2	11.28			28.0	121.8	41.4	960.9	254.3		523.5	7.5		

(N) NOT A SEPARATE PAY ITEM, FOR INFORMATION ONLY.

* DEPTH MEASURED FROM EXISTING GRADE TO PIPE FLOW LINE.

REVISED BY | DATE REVISED

QUAY CHESTER | MARK S. LEICHTFUSS

CALCULATED-DESIGNED BY | CHECKED BY

FUNCTIONAL SUPERVISOR | RON R. KRAEMER

STATE OF CALIFORNIA - DEPARTMENT OF TRANSPORTATION

Caltrans® DESIGN

DRAINAGE QUANTITIES
DQ-4

LAST REVISION 5-24-12 | DATE PLOTTED => 07-JAN-2013 | TIME PLOTTED => 14:37

Dist	COUNTY	ROUTE	POST MILES TOTAL PROJECT	SHEET No.	TOTAL SHEETS
05	SB	166	0.9/2.4,3.8/4.8	56	84

Mark S. Leichtfuss 5-24-12
REGISTERED CIVIL ENGINEER DATE

7-30-12
PLANS APPROVAL DATE

REGISTERED PROFESSIONAL ENGINEER MARK S. LEICHTFUSS No. 69124 Exp. 6-30-12 CIVIL STATE OF CALIFORNIA

THE STATE OF CALIFORNIA OR ITS OFFICERS OR AGENTS SHALL NOT BE RESPONSIBLE FOR THE ACCURACY OR COMPLETENESS OF SCANNED COPIES OF THIS PLAN SHEET.

DRAINAGE QUANTITIES

LAYOUT PLAN SHEET No.	DRAINAGE SYSTEM No. ⬡	DRAINAGE UNIT No. ○	REMOVE HEADWALL	REMOVE CULVERT (LF)	REMOVE PIPE (LF)	REMOVE FES	CONCRETE BACKFILL (PIPE TRENCH)	MINOR CONCRETE (MINOR STRUCTURE)	BAR REINFORCING STEEL	ALTERNATIVE PIPE CULVERT 36"	30"	24"	18"	ROCK SLOPE PROTECTION FABRIC (CLASS 8)	(LIGHT, METHOD B) (CY)	(No. 1, METHOD B) (CY)	(No. 2, METHOD B) (CY)	(N) * HEIGHT OF COVER	DESCRIPTION
			EA	LF	LF	EA	CY	CY	LB	LF	LF	LF	LF	SQYD	CY	CY	CY	LF	
L-8	20	a						1.95											36" Std HEADWALL
		b					34.7			111.9									
		c						1.95											36" Std HEADWALL
		d												240.6	152.2				
L-8	21	a						1.72											24" Std Dbl HEADWALL
		b										150.8							2-24" x 75.4' Alt PIPE
		c						1.72											24" Std Dbl HEADWALL
		d	1																
		e		81.0														3.2	Exist 2-24" x 40.5' CMP
		f	1																
		g												24.0		12.0			
		h												14.9			7.5		
		i			48.0														Exist 12" x 48.0' CMP
L-8	22	a	1																
		b		60.4														4.0	Exist 2-24" x 30.2' CMP
		c	1																
		d			14.0														Exist 12" x 14.0' CSP
		e			14.0														Exist 4" x 14.0' PP
L-8	23	a						1.72											24" Std Dbl HEADWALL
		b										184.0							2-24" x 92.0' Alt PIPE
		c						1.72											24" Std Dbl HEADWALL
		d				1													
		e		99.8														4.9	Exist 24.5" x 99.8' CMP
		f				1													
		g												24.0		12.0			
		h			20.0														Exist 12" x 14.0' PP
		i			51.8														Exist 6" x 51.8' PP
L-8	24	a						1.72											24" Std Dbl HEADWALL
		b										40.8							2-24" x 20.4' Alt PIPE
		c						1.72											24" Std Dbl HEADWALL
		d												101.8		50.9			
		e												24.0		12.0			
		f			13.5														Exist 8" x 13.5' PP
L-8	25	a						1.72											24" Std Dbl HEADWALL
		b										44.6							2-24" x 22.3' Alt PIPE
		c						1.72											24" Std Dbl HEADWALL
		d												24.0		12.0			
		e												24.0		12.0			
		f			28.0														Exist 4" x 28.0' PP
L-9	26	a						1.72											24" Std Dbl HEADWALL
		b										40.2							2-24" x 20.1' Alt PIPE
		c						1.72											24" Std Dbl HEADWALL
		d												24.0		12.0			
		e												24.0		12.0			
Sht TOTAL			4	241.2	189.3	2	34.7	21.10		111.9		460.4		525.3	152.2	134.9	7.5		

(N) NOT A SEPARATE PAY ITEM, FOR INFORMATION ONLY.
* DEPTH MEASURED FROM EXISTING GRADE TO PIPE FLOW LINE.

STATE OF CALIFORNIA - DEPARTMENT OF TRANSPORTATION
Caltrans
DESIGN

FUNCTIONAL SUPERVISOR: RON R. KRAEMER
CALCULATED-DESIGNED BY: QUAY CHESTER
CHECKED BY: MARK S. LEICHTFUSS
REVISED BY
DATE REVISED

LAST REVISION 5-24-12
DATE PLOTTED => 07-JAN-2013
TIME PLOTTED => 14:37

DRAINAGE QUANTITIES
DQ-5

Dist	COUNTY	ROUTE	POST MILES TOTAL PROJECT	SHEET No.	TOTAL SHEETS
05	SB	166	0.9/2.4,3.8/4.8	57	84

REGISTERED CIVIL ENGINEER 5-24-12 DATE

7-30-12
PLANS APPROVAL DATE

REGISTERED PROFESSIONAL ENGINEER MARK S. LEICHTFUSS No. 69124 Exp. 6-30-12 CIVIL STATE OF CALIFORNIA

THE STATE OF CALIFORNIA OR ITS OFFICERS OR AGENTS SHALL NOT BE RESPONSIBLE FOR THE ACCURACY OR COMPLETENESS OF SCANNED COPIES OF THIS PLAN SHEET.

DRAINAGE QUANTITIES

LAYOUT PLAN SHEET No.	DRAINAGE SYSTEM No. ⬡	DRAINAGE UNIT No. ○	REMOVE HEADWALL EA	REMOVE CULVERT (LF) LF	REMOVE PIPE (LF) LF	REMOVE FES EA	CONCRETE BACKFILL (PIPE TRENCH) CY	MINOR CONCRETE (MINOR STRUCTURE) CY	BAR REINFORCING STEEL LB	ALTERNATIVE PIPE CULVERT 36" LF	30" LF	24" LF	18" LF	ROCK SLOPE PROTECTION FABRIC (CLASS 8) SQYD	(LIGHT, METHOD B) (CY) CY	(No. 1, METHOD B) (CY) CY	(No. 2, METHOD B) (CY) CY	(N) * HEIGHT OF COVER LF	DESCRIPTION
L-9	27	a						1.72											24" Std Dbl HEADWALL
		b										121.0							2-24" x 60.5' Alt PIPE
		c						1.72											24" Std Dbl HEADWALL
		d				1													
		e		46.2														4.9	Exist 30" x 46.2' CMP
		f				1													
		g												24.0		12.0			
		h												24.0		12.0			
		i			25.0														Exist 4" x 25.0' PP
L-9	28	a						1.72											24" Std Dbl HEADWALL
		b										47.0							2-24" x 23.5' Alt PIPE
		c						1.72											24" Std Dbl HEADWALL
		d				1													
		e		55.8														4.0	Exist 30" x 55.8' CMP
		f				1													
		g												24.0		12.0			
		h												24.0		12.0			
		i			24.0														Exist 2" x 24.0' PP
		j			24.0														Exist 2" x 24.0' PP
L-9	29	a						1.72											24" Std Dbl HEADWALL
		b										64.0							2-24" x 32.0' Alt PIPE
		c						1.72											24" Std Dbl HEADWALL
		d	1																
		e		61.4														2.8	Exist 2-24" x 30.7' CMP
		f	1																
		g												24.0		12.0			
		h												24.0		12.0			
		i												14.9			7.5		SEE Sht DD-5 FOR DETAILS
		j			20.0														Exist 8" x 20.0' PP
		k			125.0														Exist 18" x 125.0' RCP
		l			92.0														Exist 18" x 92.0' RCP
L-10	30	a	1																
		b		40.8														2.6	Exist 2-24" x 20.4' CMP
		c	1																
		d												18.1		9.0			SEE Sht DD-2 FOR DETAILS
L-10	31	a						1.72											24" Std Dbl HEADWALL
		b										100.0							2-24" x 50.0' Alt PIPE
		c						1.72											24" Std Dbl HEADWALL
		d				2													
		e		88.6														3.3	Exist 2-24" x 44.3' CMP
		f	1																
		g												24.0		12.0			
		h												24.0		12.0			
		i												19.9			10		SEE Sht DD-5 FOR DETAILS
Sht TOTAL			5	292.8	310.0	6		13.76				332.0		244.9		105.0	17.5		

(N) NOT A SEPARATE PAY ITEM, FOR INFORMATION ONLY.
* DEPTH MEASURED FROM EXISTING GRADE TO PIPE FLOW LINE.

STATE OF CALIFORNIA - DEPARTMENT OF TRANSPORTATION
Caltrans® DESIGN

FUNCTIONAL SUPERVISOR: RON R. KRAEMER
CALCULATED-DESIGNED BY: QUAY CHESTER
CHECKED BY: MARK S. LEICHTFUSS
REVISED BY / DATE REVISED

LAST REVISION 5-24-12
DATE PLOTTED => 07-JAN-2013
TIME PLOTTED => 14:37

DRAINAGE QUANTITIES
DQ-6

Dist	COUNTY	ROUTE	POST MILES TOTAL PROJECT	SHEET No.	TOTAL SHEETS
05	SB	166	0.9/2.4,3.8/4.8	58	84

REGISTERED CIVIL ENGINEER 5-24-12 DATE

7-30-12
PLANS APPROVAL DATE

REGISTERED PROFESSIONAL ENGINEER MARK S. LEICHTFUSS No. 69124 Exp. 6-30-12 CIVIL STATE OF CALIFORNIA

THE STATE OF CALIFORNIA OR ITS OFFICERS OR AGENTS SHALL NOT BE RESPONSIBLE FOR THE ACCURACY OR COMPLETENESS OF SCANNED COPIES OF THIS PLAN SHEET.

DRAINAGE QUANTITIES

LAYOUT PLAN SHEET No.	DRAINAGE SYSTEM No. ⬡	DRAINAGE UNIT No. ○	REMOVE HEADWALL	REMOVE CULVERT (LF)	REMOVE PIPE (LF)	REMOVE FES	CONCRETE BACKFILL (PIPE TRENCH)	MINOR CONCRETE (MINOR STRUCTURE)	BAR REINFORCING STEEL	ALTERNATIVE PIPE CULVERT 36"	30"	24"	18"	ROCK SLOPE PROTECTION FABRIC (CLASS 8)	(LIGHT, METHOD B) (CY)	(No. 1, METHOD B) (CY)	(No. 2, METHOD B) (CY)	(N) HEIGHT OF COVER *	DESCRIPTION
			EA	LF	LF	EA	CY	CY	LB	LF	LF	LF	LF	SQYD	CY	CY	CY	LF	
L-10	32	a	1																
		b		42.0														3.2	Exist 24"x21.0' CMP, 24"x21.0' RCP
		c	1																
L-11	33	a						1.72											24" Std Dbl HEADWALL
		b					56.1					176.4							2-24" x 88.2' Alt PIPE
		c						1.72											24" Std Dbl HEADWALL
		d	1																
		e		145.0														3.2	Exist 2-24" x 72.5' CMP
		f	1																
		g												24.0		12.0			
		h												24.0		12.0			
L-11	34	a						1.72											24" Std Dbl HEADWALL
		b					47.4					149.0							2-24" x 74.5' Alt PIPE
		c						1.72											24" Std Dbl HEADWALL
		d	1																
		e		403.6														2.7	Exist 2-24" x 201.8' RCP
		f	1																
		g												24.0		12.0			
		h												24.0		12.0			
L-3	35	a												31.3			15.7		
L-8	36	a												11.4			6		
		b			25.0														Exist 12" x 25.0' PP
		c			22.0														Exist 12" x 22.0' PP
L-9	37	a												14.9			7.5		
		b			35.0														Exist 18" x 35.0' HDPP
Sht TOTAL			6	590.6	82.0		103.5	6.88				325.4		153.6		48.0	29.2		

(N) NOT A SEPARATE PAY ITEM, FOR INFORMATION ONLY.

* DEPTH MEASURED FROM EXISTING GRADE TO PIPE FLOW LINE.

REVISED BY | DATE REVISED

QUAY CHESTER | MARK S. LEICHTFUSS

CALCULATED-DESIGNED BY | CHECKED BY

FUNCTIONAL SUPERVISOR | RON R. KRAEMER

STATE OF CALIFORNIA - DEPARTMENT OF TRANSPORTATION

Caltrans® DESIGN

DRAINAGE QUANTITIES
DQ-7

LAST REVISION 5-24-12 | DATE PLOTTED => 07-JAN-2013 TIME PLOTTED => 14:37

Dist	COUNTY	ROUTE	POST MILES TOTAL PROJECT	SHEET No.	TOTAL SHEETS
05	SB	166	0.9/2.4,3.8/4.8	59	84

REGISTERED CIVIL ENGINEER 5-24-12 DATE

7-30-12
PLANS APPROVAL DATE

REGISTERED PROFESSIONAL ENGINEER MARK S. LEICHTFUSS No. 69124 Exp. 6-30-12 CIVIL STATE OF CALIFORNIA

THE STATE OF CALIFORNIA OR ITS OFFICERS OR AGENTS SHALL NOT BE RESPONSIBLE FOR THE ACCURACY OR COMPLETENESS OF SCANNED COPIES OF THIS PLAN SHEET.

DRAINAGE QUANTITIES SUMMARY

SHEET No.	REMOVE HEADWALL	REMOVE CULVERT (LF)	REMOVE PIPE (LF)	REMOVE FES	REMOVE RCB CULVERT (LF)	CONCRETE BACKFILL (PIPE TRENCH)	MINOR CONCRETE (MINOR STRUCTURE)	CONCRETE (CHANNEL LINING)	BAR REINFORCING STEEL	ALTERNATIVE PIPE CULVERT				ROCK SLOPE PROTECTION					REMARKS
										36"	30"	24"	18"	FABRIC (CLASS 8)	(1/2 T, METHOD A) (CY)	(LIGHT, METHOD B) (CY)	(No. 1, METHOD B) (CY)	(No. 2, METHOD B) (CY)	
	EA	LF	LF	EA	LF	CY	CY	CY	LB	LF	LF	LF	LF	SQYD	CY	CY	CY	CY	
DQ-1	9	355.3	29.0	3	71.0	163.7	16.10	8.2	1,528		32.2	485.2	103.0	169.0			48.0	36.6	
DQ-2	10	125.7	86.9			16.5	16.00				64.3	130.0	42.6	314.5			120.0	37.5	
DQ-3	9	161.8				12.3	13.36				48.0	333.4	78.2	251.6			96.0	30.0	
DQ-4	7	284.4	109.4	2		7.2	11.28				28.0	121.8	41.4	960.9	254.3		523.5	7.5	
DQ-5	4	241.2	189.3	2		34.7	21.10			111.9		460.4		525.3		152.2	134.9	7.5	
DQ-6	5	292.8	310.0	6			13.76					332.0		244.9			105.0	17.5	
DQ-7	6	590.6	82.0			103.5	6.88					325.4		153.6			48.0	29.2	
TOTAL	50	2,051.8	806.6	13	71.0	337.9	98.48	8.2	1,528	111.9	172.5	2,188	266	2,619.8	254.3	152.2	1,075.4	165.8	

ALTERNATIVE PIPE ALLOWABLE MATERIAL

DESCRIPTION	TYPE	
	RCP	PLASTIC PIPE TYPE S (SMOOTH INTERIOR)
	SIZE	SIZE
18" APC	18"	18"
24" APC	24"	24"
30" APC	30"	30"
36" APC	36"	36"

DRAINAGE QUANTITIES
DQ-8

MARK S. LEICHTFUSS — REVISED BY
QUAY CHESTER — DATE REVISED
CALCULATED-DESIGNED BY
CHECKED BY
FUNCTIONAL SUPERVISOR
RON R. KRAEMER
STATE OF CALIFORNIA - DEPARTMENT OF TRANSPORTATION
Caltrans
DESIGN

LAST REVISION 5-24-12
DATE PLOTTED => 07-JAN-2013
TIME PLOTTED => 14:37

Dist	COUNTY	ROUTE	POST MILES TOTAL PROJECT	SHEET No.	TOTAL SHEETS
05	SB	166	0.9/2.4,3.8/4.8	60	84

Mark S. Leichtfuss 5-24-12
REGISTERED CIVIL ENGINEER DATE

7-30-12
PLANS APPROVAL DATE

REGISTERED PROFESSIONAL ENGINEER MARK S. LEICHTFUSS No. 69124 Exp. 6-30-12 CIVIL STATE OF CALIFORNIA

THE STATE OF CALIFORNIA OR ITS OFFICERS OR AGENTS SHALL NOT BE RESPONSIBLE FOR THE ACCURACY OR COMPLETENESS OF SCANNED COPIES OF THIS PLAN SHEET.

NOTES:

1. FOR ACCURATE RIGHT OF WAY DATA, CONTACT RIGHT OF WAY ENGINEERING AT THE DISTRICT OFFICE.
2. ELEVATIONS SHOWN REFER TO THE TOP OF PIPE OR CONDUIT, UNLESS OTHERWISE STATED.
3. UTILITY OWNERSHIP ON THIS PROJECT OR AS SHOWN:

   GAS - SOUTHERN CALIFORNIA GAS COMPANY
   ELECTRICAL - PACIFIC GAS & ELECTRIC (PG&E)
   WATER - CENTRAL COAST WATER AUTHORITY
   TELEPHONE - VERIZON
   FIBER OPTIC - MCI
   FIBER OPTIC - SPRINT-NEXTEL
   FIBER OPTIC - COMCAST CABLE
4. ALL UTILITY CONFLICTS AND POTENTIAL CONFLICTS MUST BE RESOLVED BEFORE BEGINNING CONSTRUCTION.

LEGEND:

—---jt——————---(oh)——— JOINT OVERHEAD (AERIAL) - EXISTING

—---JT——————---(OH)——— JOINT OVERHEAD (AERIAL) - PROPOSED

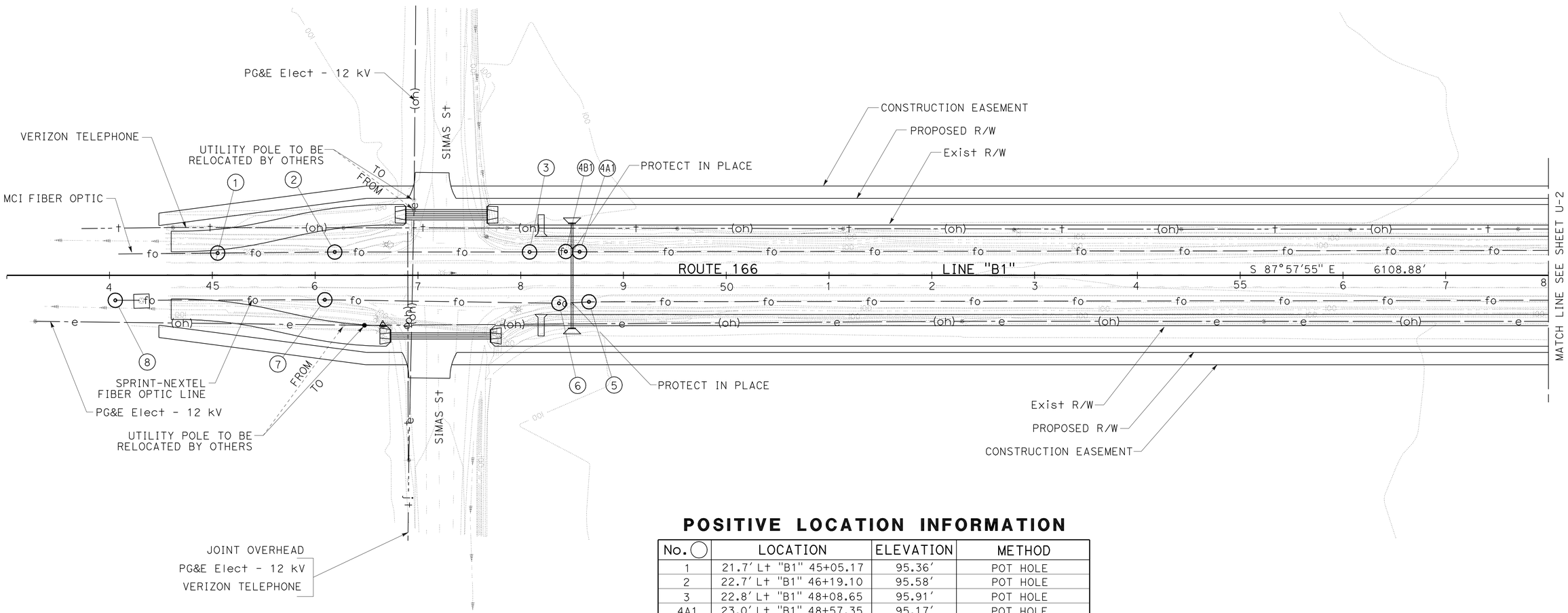

POSITIVE LOCATION INFORMATION

No. ◯	LOCATION	ELEVATION	METHOD
1	21.7' Lt "B1" 45+05.17	95.36'	POT HOLE
2	22.7' Lt "B1" 46+19.10	95.58'	POT HOLE
3	22.8' Lt "B1" 48+08.65	95.91'	POT HOLE
4A1	23.0' Lt "B1" 48+57.35	95.17'	POT HOLE
4B1	23.2' Lt "B1" 48+43.89	95.87'	POT HOLE
5	25.8' Rt "B1" 48+66.44	96.44'	POT HOLE
6	27.2' Rt "B1" 48+37.25	98.51'	POT HOLE
7	23.8' Rt "B1" 46+09.46	97.12'	POT HOLE
8	24.3' Rt "B1" 44+05.59	95.88'	POT HOLE

UTILITY PLAN

SCALE: 1" = 50'

U-1

APPROVED FOR UTILITY INFORMATION ONLY

STATE OF CALIFORNIA - DEPARTMENT OF TRANSPORTATION
Caltrans
DESIGN

FUNCTIONAL SUPERVISOR: RON R. KRAEMER
CALCULATED-DESIGNED BY: STEVEN GIOVANNETTI
CHECKED BY: MARK S. LEICHTFUSS
REVISED BY
DATE REVISED

LAST REVISION 5-24-12
DATE PLOTTED => 07-JAN-2013
TIME PLOTTED => 14:37

Dist	COUNTY	ROUTE	POST MILES TOTAL PROJECT	SHEET No.	TOTAL SHEETS
05	SB	166	0.9/2.4,3.8/4.8	61	84

Mark S. Leichtfuss 5-24-12
REGISTERED CIVIL ENGINEER DATE

7-30-12
PLANS APPROVAL DATE

REGISTERED PROFESSIONAL ENGINEER
MARK S. LEICHTFUSS
No. 69124
Exp. 6-30-12
CIVIL
STATE OF CALIFORNIA

THE STATE OF CALIFORNIA OR ITS OFFICERS OR AGENTS SHALL NOT BE RESPONSIBLE FOR THE ACCURACY OR COMPLETENESS OF SCANNED COPIES OF THIS PLAN SHEET.

NOTE:

FOR ACCURATE RIGHT OF WAY DATA, CONTACT RIGHT OF WAY ENGINEERING AT THE DISTRICT OFFICE.

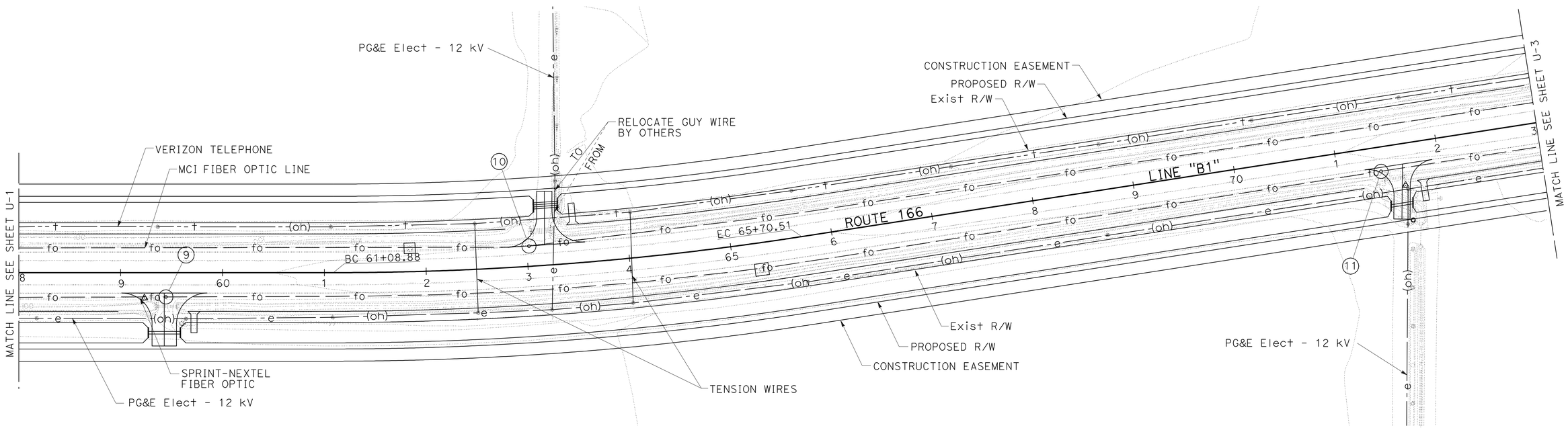

POSITIVE LOCATION INFORMATION

No. ◯	LOCATION	ELEVATION	METHOD
9	23.8′ Rt "B1" 59+44.40	99.03′	POT HOLE
10	19.9′ Lt "B1" 63+02.28	99.84′	POT HOLE
11	23.8′ Rt "B1" 71+41.70	102.44′	POT HOLE

APPROVED FOR UTILITY INFORMATION ONLY

UTILITY PLAN

SCALE: 1" = 50′

U-2

STATE OF CALIFORNIA - DEPARTMENT OF TRANSPORTATION
Caltrans®
DESIGN

FUNCTIONAL SUPERVISOR: RON R. KRAEMER
CALCULATED-DESIGNED BY: STEVEN GIOVANNETTI
CHECKED BY: MARK S. LEICHTFUSS
REVISED BY
DATE REVISED

LAST REVISION 5-24-12
DATE PLOTTED => 07-JAN-2013
TIME PLOTTED => 14:37

Dist	COUNTY	ROUTE	POST MILES TOTAL PROJECT	SHEET No.	TOTAL SHEETS
05	SB	166	0.9/2.4,3.8/4.8	62	84

Mark S. Leichtfuss 5-24-12
REGISTERED CIVIL ENGINEER DATE

7-30-12
PLANS APPROVAL DATE

REGISTERED PROFESSIONAL ENGINEER MARK S. LEICHTFUSS No. 69124 Exp. 6-30-12 CIVIL STATE OF CALIFORNIA

THE STATE OF CALIFORNIA OR ITS OFFICERS OR AGENTS SHALL NOT BE RESPONSIBLE FOR THE ACCURACY OR COMPLETENESS OF SCANNED COPIES OF THIS PLAN SHEET.

NOTE:

FOR ACCURATE RIGHT OF WAY DATA, CONTACT
RIGHT OF WAY ENGINEERING AT THE DISTRICT OFFICE.

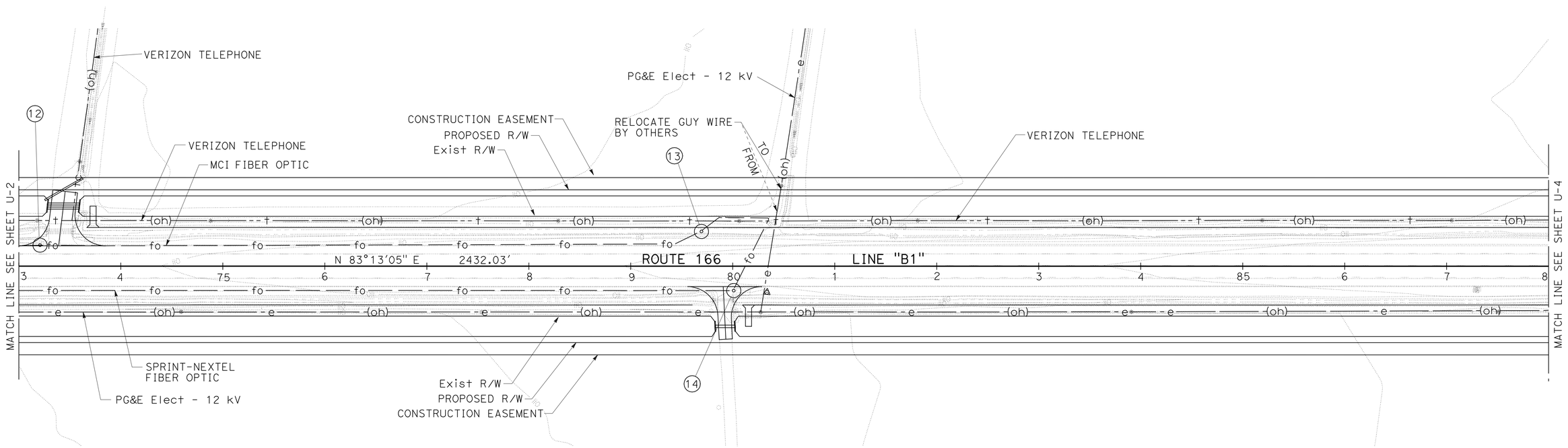

POSITIVE LOCATION INFORMATION

No. ◯	LOCATION	ELEVATION	METHOD
12	20.6' Lt "B1" 73+20.76	105.10'	POT HOLE
13	34.2' Lt "B1" 79+68.66	107.00'	POT HOLE
14	23.9' Rt "B1" 80+00.32	107.50'	POT HOLE

APPROVED FOR UTILITY INFORMATION ONLY

UTILITY PLAN

SCALE: 1" = 50'

U-3

STATE OF CALIFORNIA - DEPARTMENT OF TRANSPORTATION
Caltrans®
DESIGN

FUNCTIONAL SUPERVISOR: RON R. KRAEMER
CALCULATED-DESIGNED BY: STEVEN GIOVANNETTI
CHECKED BY: MARK S. LEICHTFUSS
REVISED BY
DATE REVISED

LAST REVISION 5-24-12
DATE PLOTTED => 07-JAN-2013
TIME PLOTTED => 14:37

Dist	COUNTY	ROUTE	POST MILES TOTAL PROJECT	SHEET No.	TOTAL SHEETS
05	SB	166	0.9/2.4,3.8/4.8	63	84

Mark S. Leichtfuss 5-24-12
REGISTERED CIVIL ENGINEER DATE

7-30-12
PLANS APPROVAL DATE

REGISTERED PROFESSIONAL ENGINEER
MARK S. LEICHTFUSS
No. 69124
Exp. 6-30-12
CIVIL
STATE OF CALIFORNIA

THE STATE OF CALIFORNIA OR ITS OFFICERS OR AGENTS SHALL NOT BE RESPONSIBLE FOR THE ACCURACY OR COMPLETENESS OF SCANNED COPIES OF THIS PLAN SHEET.

NOTE:

FOR ACCURATE RIGHT OF WAY DATA, CONTACT
RIGHT OF WAY ENGINEERING AT THE DISTRICT OFFICE.

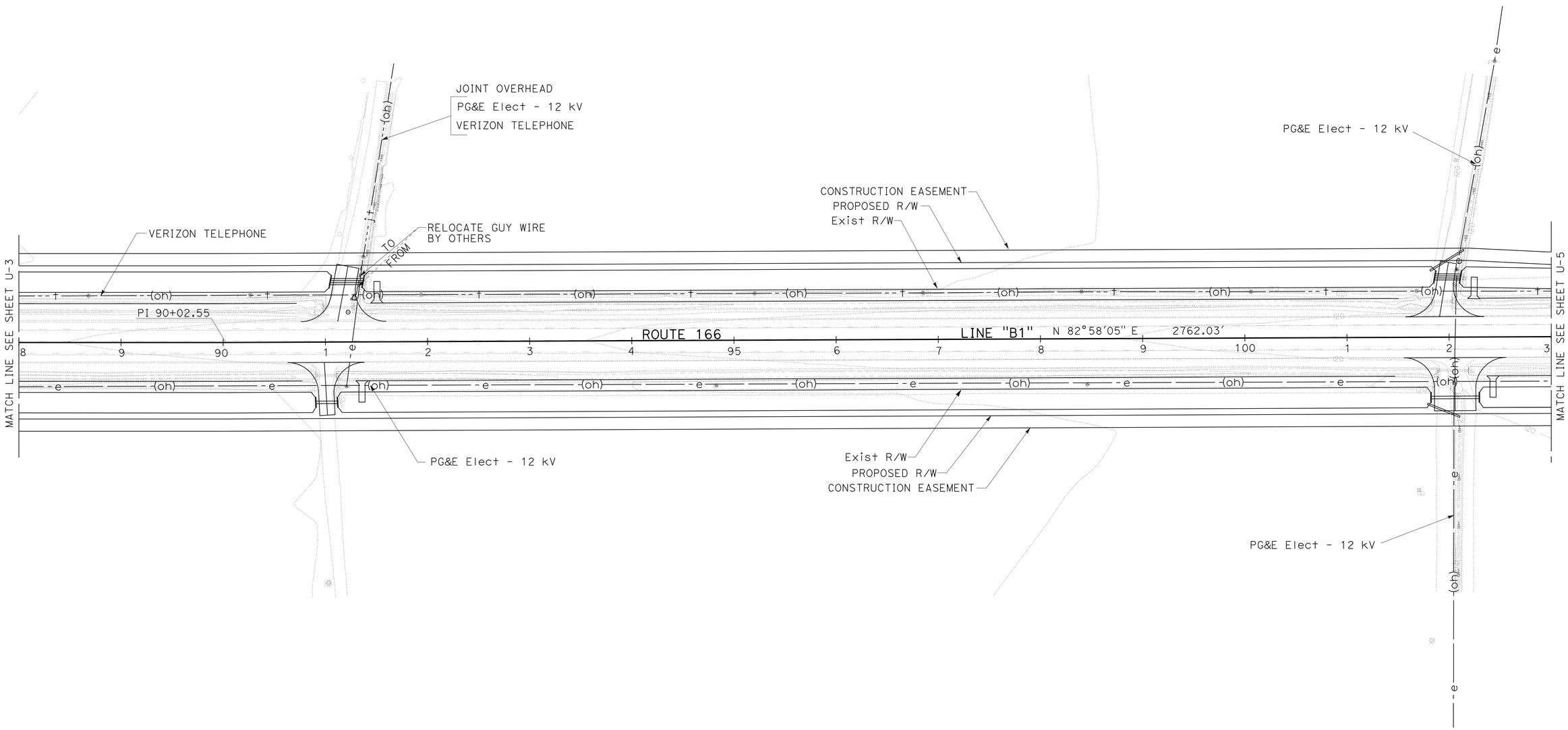

UTILITY PLAN

SCALE: 1" = 50'

U-4

APPROVED FOR UTILITY INFORMATION ONLY

STATE OF CALIFORNIA - DEPARTMENT OF TRANSPORTATION
Caltrans
DESIGN

FUNCTIONAL SUPERVISOR: RON R. KRAEMER
CALCULATED-DESIGNED BY: STEVEN GIOVANNETTI
CHECKED BY: MARK S. LEICHTFUSS
REVISED BY
DATE REVISED

LAST REVISION 5-24-12
DATE PLOTTED => 07-JAN-2013
TIME PLOTTED => 14:37

Dist	COUNTY	ROUTE	POST MILES TOTAL PROJECT	SHEET No.	TOTAL SHEETS
05	SB	166	0.9/2.4,3.8/4.8	64	84

Mark S. Leichtfuss 5-24-12
REGISTERED CIVIL ENGINEER DATE

7-30-12
PLANS APPROVAL DATE

REGISTERED PROFESSIONAL ENGINEER
MARK S. LEICHTFUSS
No. 69124
Exp. 6-30-12
CIVIL
STATE OF CALIFORNIA

THE STATE OF CALIFORNIA OR ITS OFFICERS OR AGENTS SHALL NOT BE RESPONSIBLE FOR THE ACCURACY OR COMPLETENESS OF SCANNED COPIES OF THIS PLAN SHEET.

NOTE:

FOR ACCURATE RIGHT OF WAY DATA, CONTACT
RIGHT OF WAY ENGINEERING AT THE DISTRICT OFFICE.

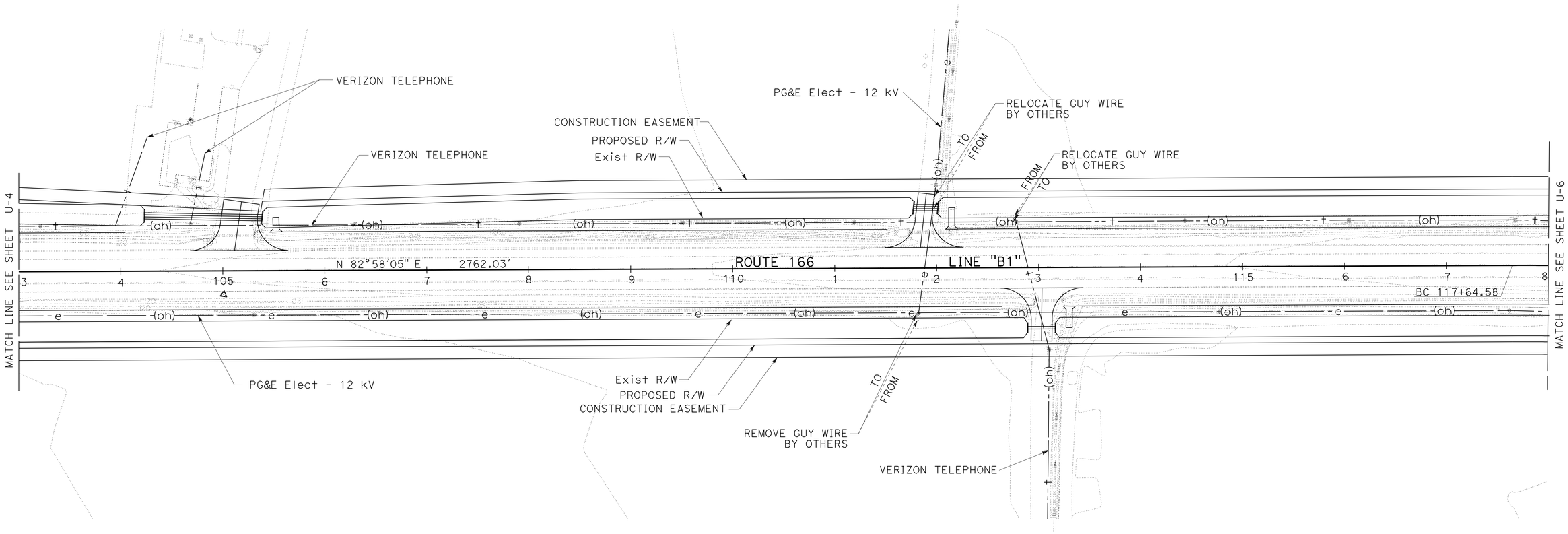

UTILITY PLAN

SCALE: 1" = 50'

U-5

APPROVED FOR UTILITY INFORMATION ONLY

STATE OF CALIFORNIA - DEPARTMENT OF TRANSPORTATION
Caltrans® DESIGN

FUNCTIONAL SUPERVISOR: RON R. KRAEMER
CALCULATED-DESIGNED BY: STEVEN GIOVANNETTI
CHECKED BY: MARK S. LEICHTFUSS
REVISED BY
DATE REVISED

LAST REVISION 5-24-12
DATE PLOTTED => 07-JAN-2013
TIME PLOTTED => 14:37

Dist	COUNTY	ROUTE	POST MILES TOTAL PROJECT	SHEET No.	TOTAL SHEETS
05	SB	166	0.9/2.4,3.8/4.8	65	84

REGISTERED CIVIL ENGINEER 5-24-12 DATE

7-30-12
PLANS APPROVAL DATE

REGISTERED PROFESSIONAL ENGINEER MARK S. LEICHTFUSS No. 69124 Exp. 6-30-12 CIVIL STATE OF CALIFORNIA

THE STATE OF CALIFORNIA OR ITS OFFICERS OR AGENTS SHALL NOT BE RESPONSIBLE FOR THE ACCURACY OR COMPLETENESS OF SCANNED COPIES OF THIS PLAN SHEET.

NOTE:

FOR ACCURATE RIGHT OF WAY DATA, CONTACT
RIGHT OF WAY ENGINEERING AT THE DISTRICT OFFICE.

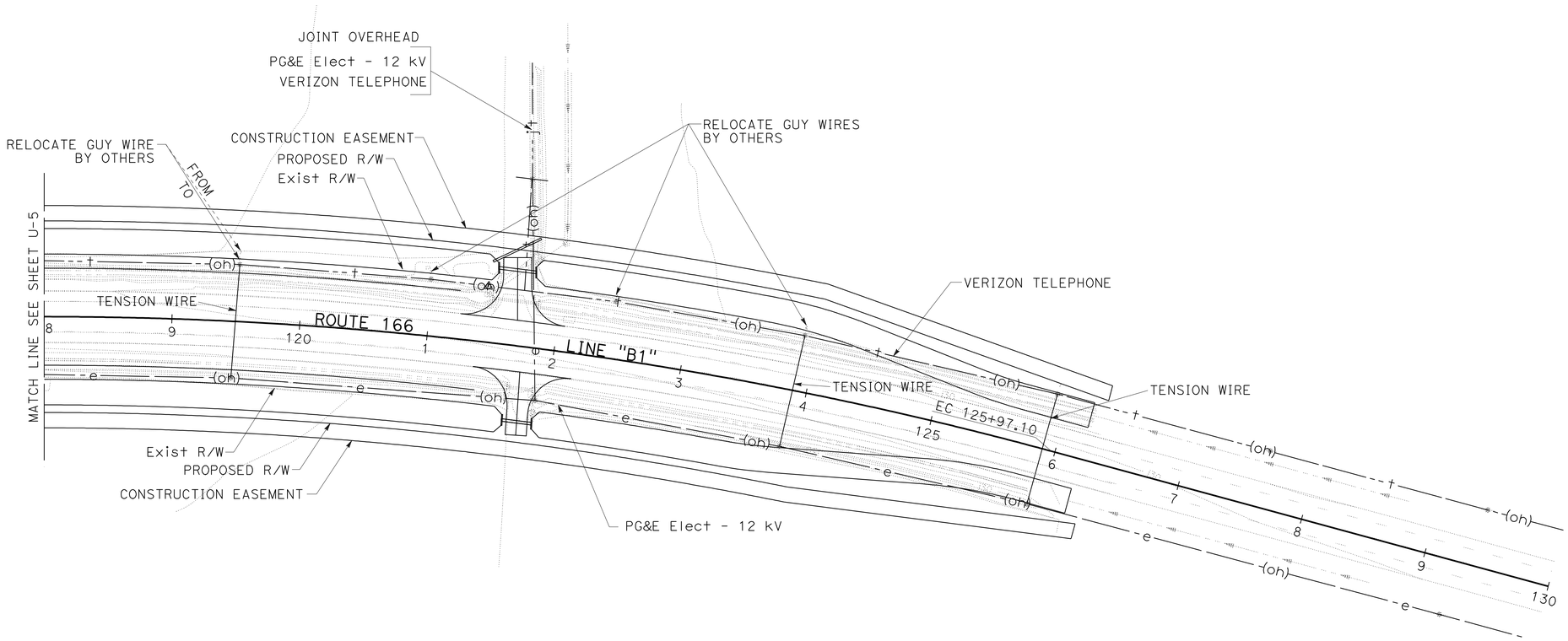

APPROVED FOR UTILITY INFORMATION ONLY

UTILITY PLAN

SCALE: 1" = 50'

U-6

STATE OF CALIFORNIA - DEPARTMENT OF TRANSPORTATION
Caltrans® DESIGN

FUNCTIONAL SUPERVISOR: RON R. KRAEMER
CALCULATED-DESIGNED BY: STEVEN GIOVANNETTI
CHECKED BY: MARK S. LEICHTFUSS
REVISED BY
DATE REVISED

LAST REVISION 5-24-12
DATE PLOTTED => 07-JAN-2013
TIME PLOTTED => 14:38

Dist	COUNTY	ROUTE	POST MILES TOTAL PROJECT	SHEET No.	TOTAL SHEETS
05	SB	166	0.9/2.4,3.8/4.8	66	84

REGISTERED CIVIL ENGINEER 5-24-12 DATE

7-30-12
PLANS APPROVAL DATE

REGISTERED PROFESSIONAL ENGINEER MARK S. LEICHTFUSS No. 69124 Exp. 6-30-12 CIVIL STATE OF CALIFORNIA

THE STATE OF CALIFORNIA OR ITS OFFICERS OR AGENTS SHALL NOT BE RESPONSIBLE FOR THE ACCURACY OR COMPLETENESS OF SCANNED COPIES OF THIS PLAN SHEET.

NOTE:

FOR ACCURATE RIGHT OF WAY AND ACCESS DATA, CONTACT RIGHT OF WAY ENGINEERING AT THE DISTRICT OFFICE.

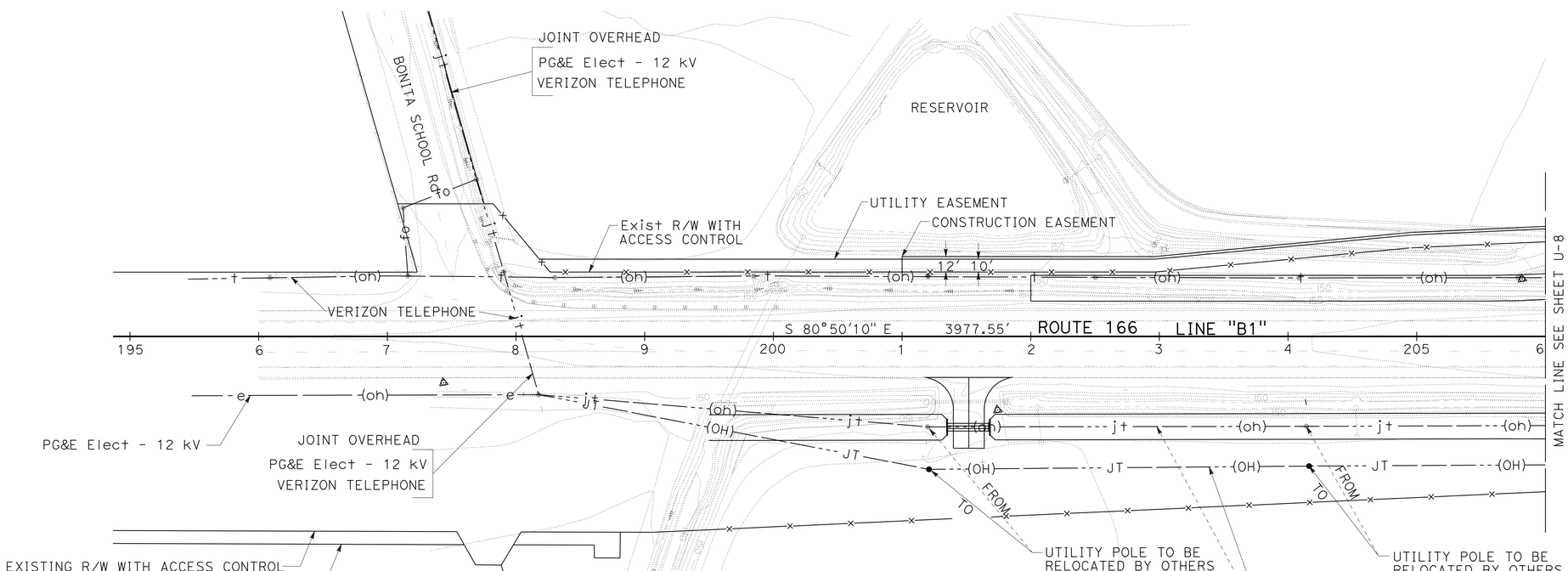

UTILITY PLAN

SCALE: 1" = 50'

U-7

APPROVED FOR UTILITY INFORMATION ONLY

STATE OF CALIFORNIA - DEPARTMENT OF TRANSPORTATION
Caltrans
DESIGN

FUNCTIONAL SUPERVISOR: RON R. KRAEMER
CALCULATED-DESIGNED BY: STEVEN GIOVANNETTI
CHECKED BY: MARK S. LEICHTFUSS
REVISED BY
DATE REVISED

LAST REVISION 5-24-12
DATE PLOTTED => 07-JAN-2013
TIME PLOTTED => 14:38

Dist	COUNTY	ROUTE	POST MILES TOTAL PROJECT	SHEET No.	TOTAL SHEETS
05	SB	166	0.9/2.4,3.8/4.8	67	84

REGISTERED CIVIL ENGINEER 5-24-12 DATE

7-30-12
PLANS APPROVAL DATE

REGISTERED PROFESSIONAL ENGINEER MARK S. LEICHTFUSS No. 69124 Exp. 6-30-12 CIVIL STATE OF CALIFORNIA

THE STATE OF CALIFORNIA OR ITS OFFICERS OR AGENTS SHALL NOT BE RESPONSIBLE FOR THE ACCURACY OR COMPLETENESS OF SCANNED COPIES OF THIS PLAN SHEET.

NOTE:

FOR ACCURATE RIGHT OF WAY AND ACCESS DATA, CONTACT RIGHT OF WAY ENGINEERING AT THE DISTRICT OFFICE.

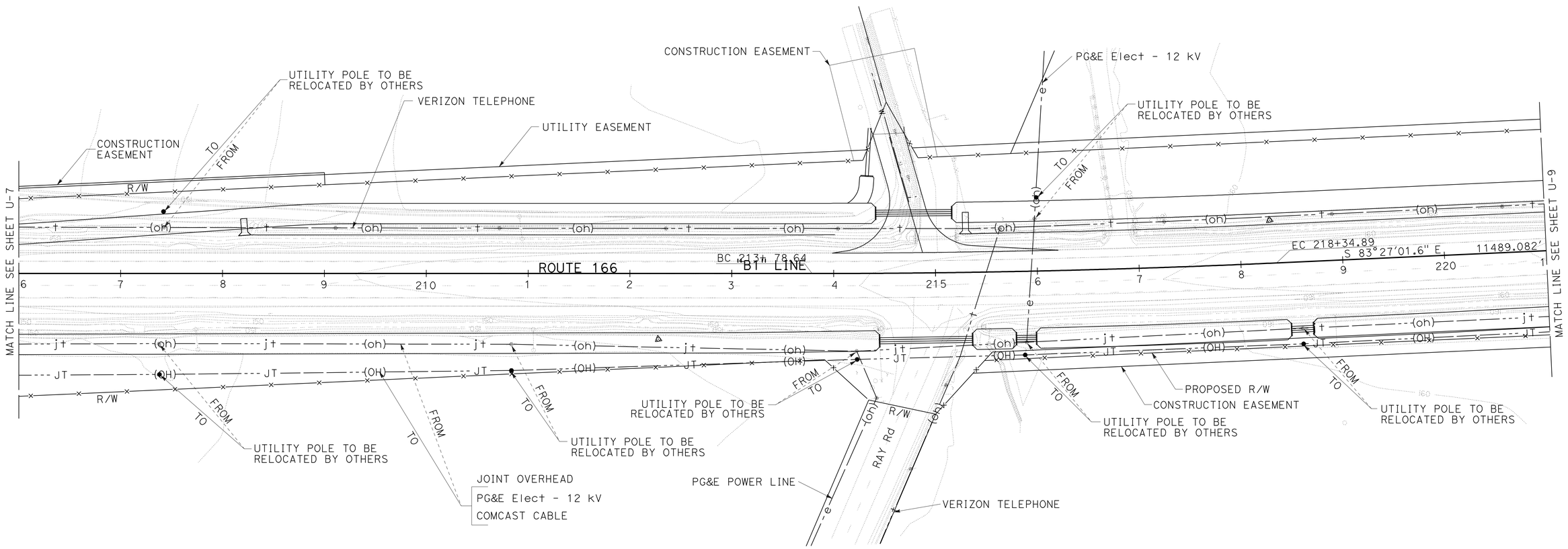

APPROVED FOR UTILITY INFORMATION ONLY

UTILITY PLAN

SCALE: 1" = 50'

U-8

STATE OF CALIFORNIA - DEPARTMENT OF TRANSPORTATION
Caltrans
DESIGN

FUNCTIONAL SUPERVISOR: RON R. KRAEMER
CALCULATED-DESIGNED BY: STEVEN GIOVANNETTI
CHECKED BY: MARK S. LEICHTFUSS
REVISED BY
DATE REVISED

LAST REVISION 5-24-12
DATE PLOTTED => 07-JAN-2013
TIME PLOTTED => 14:38

Dist	COUNTY	ROUTE	POST MILES TOTAL PROJECT	SHEET No.	TOTAL SHEETS
05	SB	166	0.9/2.4,3.8/4.8	68	84

Mark S. Leichtfuss 5-24-12
REGISTERED CIVIL ENGINEER DATE

7-30-12
PLANS APPROVAL DATE

REGISTERED PROFESSIONAL ENGINEER MARK S. LEICHTFUSS No. 69124 Exp. 6-30-12 CIVIL STATE OF CALIFORNIA

THE STATE OF CALIFORNIA OR ITS OFFICERS OR AGENTS SHALL NOT BE RESPONSIBLE FOR THE ACCURACY OR COMPLETENESS OF SCANNED COPIES OF THIS PLAN SHEET.

NOTE:

FOR ACCURATE RIGHT OF WAY AND ACCESS DATA, CONTACT RIGHT OF WAY ENGINEERING AT THE DISTRICT OFFICE.

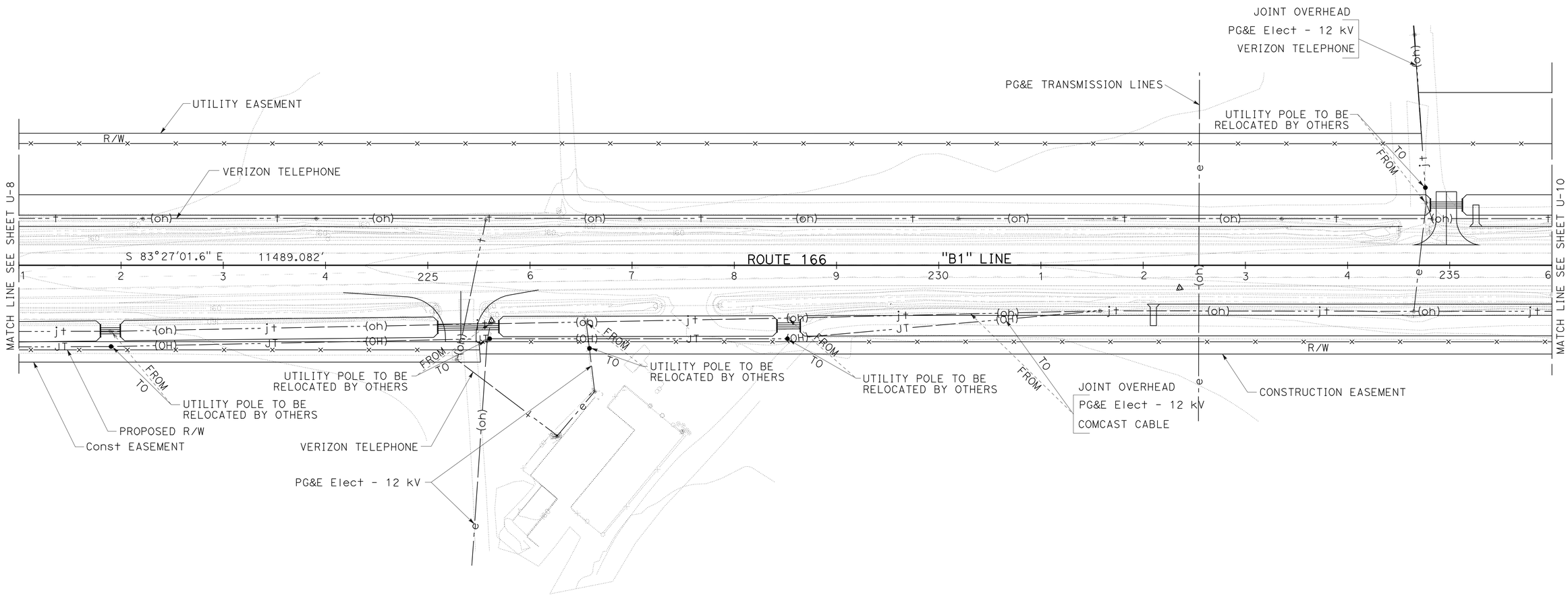

APPROVED FOR UTILITY INFORMATION ONLY

UTILITY PLAN

SCALE: 1" = 50'

U-9

STATE OF CALIFORNIA - DEPARTMENT OF TRANSPORTATION
Caltrans
DESIGN

FUNCTIONAL SUPERVISOR: RON R. KRAEMER

CALCULATED-DESIGNED BY: STEVEN GIOVANNETTI
CHECKED BY: MARK S. LEICHTFUSS

REVISED BY
DATE REVISED

LAST REVISION 5-24-12
DATE PLOTTED => 07-JAN-2013
TIME PLOTTED => 14:38

Dist	COUNTY	ROUTE	POST MILES TOTAL PROJECT	SHEET No.	TOTAL SHEETS
05	SB	166	0.9/2.4,3.8/4.8	69	84

REGISTERED CIVIL ENGINEER 5-24-12 DATE

7-30-12
PLANS APPROVAL DATE

REGISTERED PROFESSIONAL ENGINEER MARK S. LEICHTFUSS No. 69124 Exp. 6-30-12 CIVIL STATE OF CALIFORNIA

THE STATE OF CALIFORNIA OR ITS OFFICERS OR AGENTS SHALL NOT BE RESPONSIBLE FOR THE ACCURACY OR COMPLETENESS OF SCANNED COPIES OF THIS PLAN SHEET.

NOTE:

FOR ACCURATE RIGHT OF WAY AND ACCESS DATA, CONTACT RIGHT OF WAY ENGINEERING AT THE DISTRICT OFFICE.

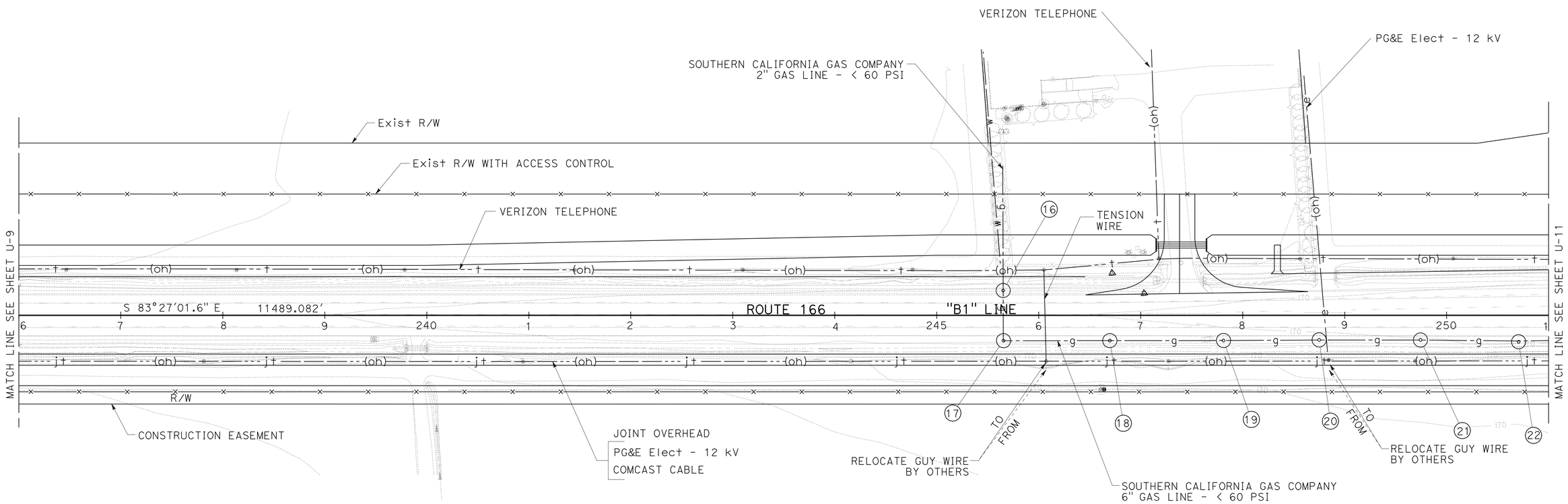

POSITIVE LOCATION INFORMATION

No. ◯	LOCATION	ELEVATION	METHOD
16	24.4′ Lt "B1" 245+65.18	161.44′	POT HOLE
17	25.0′ Rt "B1" 245+65.35	164.61′	POT HOLE
18	24.8′ Rt "B1" 246+69.07	165.05′	POT HOLE
19	24.8′ Rt "B1" 247+80.56	165.14′	POT HOLE
20	24.2′ Rt "B1" 248+74.33	165.64	POT HOLE
21	24.3′ Rt "B1" 249+73.69	165.20	POT HOLE
22	25.2′ Rt "B1" 250+70.46	165.77	POT HOLE

NOTE: POT HOLE NUMBER 15 WAS ABANDONED SINCE NO GAS LINE WAS FOUND IN IT.

UTILITY PLAN

SCALE: 1" = 50′

U-10

APPROVED FOR UTILITY INFORMATION ONLY

STATE OF CALIFORNIA - DEPARTMENT OF TRANSPORTATION
Caltrans®
DESIGN

FUNCTIONAL SUPERVISOR: RON R. KRAEMER
CALCULATED-DESIGNED BY: STEVEN GIOVANNETTI
CHECKED BY: MARK S. LEICHTFUSS
REVISED BY
DATE REVISED

LAST REVISION 5-24-12
DATE PLOTTED => 07-JAN-2013
TIME PLOTTED => 14:38

Dist	COUNTY	ROUTE	POST MILES TOTAL PROJECT	SHEET No.	TOTAL SHEETS
05	SB	166	0.9/2.4,3.8/4.8	70	84

REGISTERED CIVIL ENGINEER 5-24-12 DATE

7-30-12
PLANS APPROVAL DATE

REGISTERED PROFESSIONAL ENGINEER MARK S. LEICHTFUSS No. 69124 Exp. 6-30-12 CIVIL STATE OF CALIFORNIA

THE STATE OF CALIFORNIA OR ITS OFFICERS OR AGENTS SHALL NOT BE RESPONSIBLE FOR THE ACCURACY OR COMPLETENESS OF SCANNED COPIES OF THIS PLAN SHEET.

NOTE:

FOR ACCURATE RIGHT OF WAY AND ACCESS DATA, CONTACT RIGHT OF WAY ENGINEERING AT THE DISTRICT OFFICE.

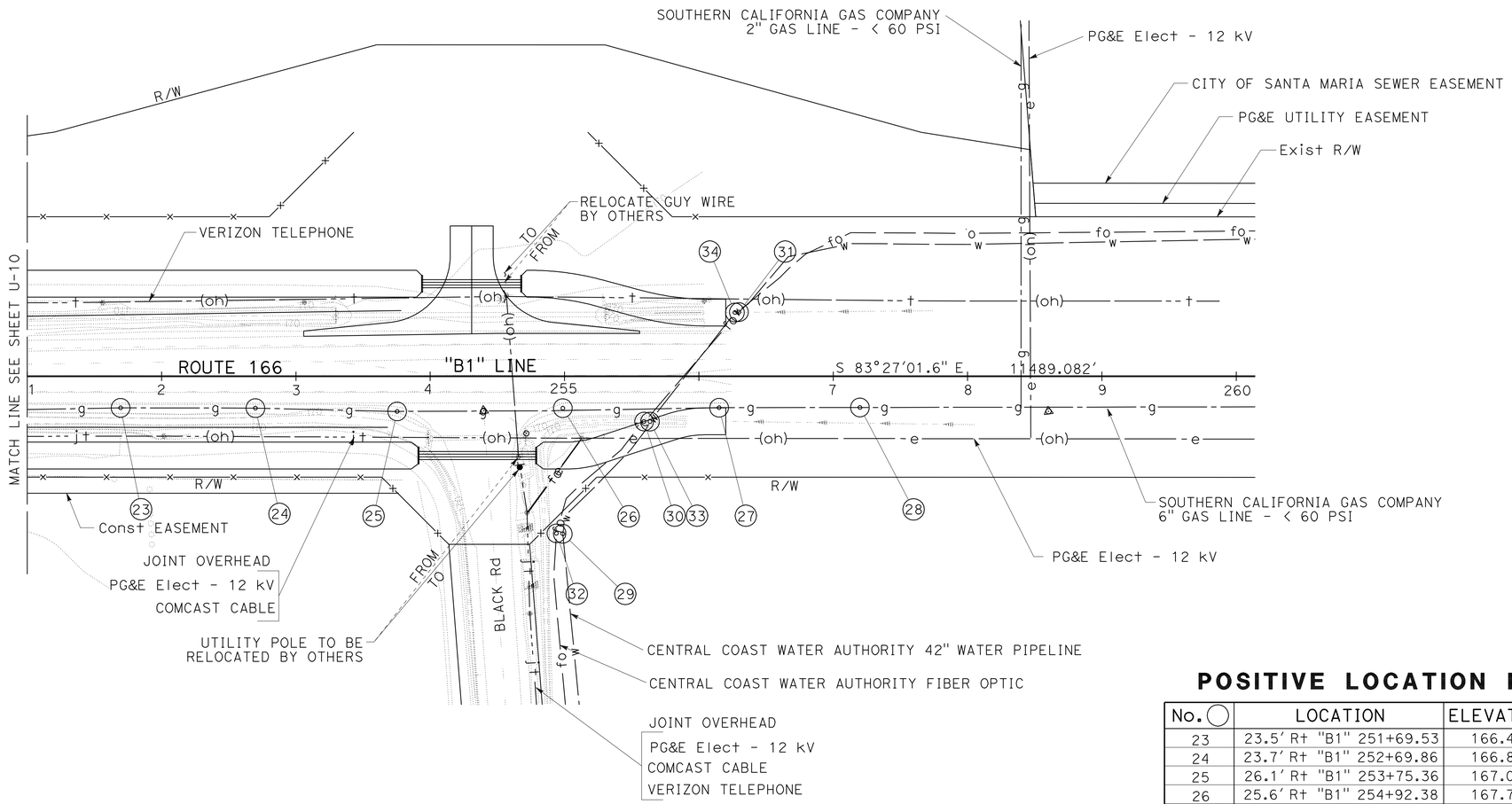

POSITIVE LOCATION INFORMATION

No. ◯	LOCATION	ELEVATION	METHOD
23	23.5' Rt "B1" 251+69.53	166.44	POT HOLE
24	23.7' Rt "B1" 252+69.86	166.80	POT HOLE
25	26.1' Rt "B1" 253+75.36	167.02	POT HOLE
26	25.6' Rt "B1" 254+92.38	167.78	POT HOLE
27	23.4' Rt "B1" 256+15.03	167.60	POT HOLE
28	23.2' Rt "B1" 257+19.86	167.86	POT HOLE
29	117.2' Rt "B1" 254+98.67	162.75	POT HOLE
30	33.7' Rt "B1" 255+59.20	161.28	POT HOLE
31	47.8' Lt "B1" 256+29.76	161.65	POT HOLE
32	116.9' Rt "B1" 254+93.95	160.93	POT HOLE
33	33.7' Rt "B1" 255+63.56	159.81	POT HOLE
34	47.5' Lt "B1" 256+26.81	162.25	POT HOLE

UTILITY PLAN

SCALE: 1" = 50'

U-11

APPROVED FOR UTILITY INFORMATION ONLY

STATE OF CALIFORNIA - DEPARTMENT OF TRANSPORTATION
Caltrans
DESIGN

FUNCTIONAL SUPERVISOR: RON R. KRAEMER
CALCULATED-DESIGNED BY: STEVEN GIOVANNETTI
CHECKED BY: MARK S. LEICHTFUSS
REVISED BY
DATE REVISED

LAST REVISION 5-24-12
DATE PLOTTED => 07-JAN-2013
TIME PLOTTED => 14:38

Dist	COUNTY	ROUTE	POST MILES TOTAL PROJECT	SHEET No.	TOTAL SHEETS
05	SB	166	0.9/2.4,3.8/4.8	71	84

REGISTERED CIVIL ENGINEER 5-24-12 DATE

7-30-12
PLANS APPROVAL DATE

REGISTERED PROFESSIONAL ENGINEER FAWZI YAGHMOUR No. C-54750 Exp. 12/31/13 CIVIL STATE OF CALIFORNIA

THE STATE OF CALIFORNIA OR ITS OFFICERS OR AGENTS SHALL NOT BE RESPONSIBLE FOR THE ACCURACY OR COMPLETENESS OF SCANNED COPIES OF THIS PLAN SHEET.

CONSTRUCTION AREA SIGNS (STATIONARY MOUNTED)

LEGEND:

- ◯ SIGN NUMBER
- TWO POST
- ONE POST

SIGN No.	SIGN CODE		PANEL SIZE	SIGN MESSAGE	No. OF POSTS AND SIZE	No. OF SIGNS
	FEDERAL	CALIFORNIA				
Ⓐ	G20-1		60" X 48"	ROAD WORK NEXT 10 MILES	2-6" X 6"	2
Ⓑ	W20-1	C23	36" X 36"	ROAD WORK AHEAD	1-4" X 6"	8
Ⓒ	G20-2	C14	48" X 24"	END ROAD WORK	1-6" X 6"	8
Ⓓ		C40	102" × 42"	TRAFFIC FINES DOUBLED IN CONSTRUCTION ZONES	2-6" X 6"	2
Ⓔ	W16-1		24" X 30"	SHARE THE ROAD	1-4" X 4"	4
	W11-1		36" X 36"	BICYCLE SYMBOL		

ROAD WORK
NEXT 10 MILES
G20-1

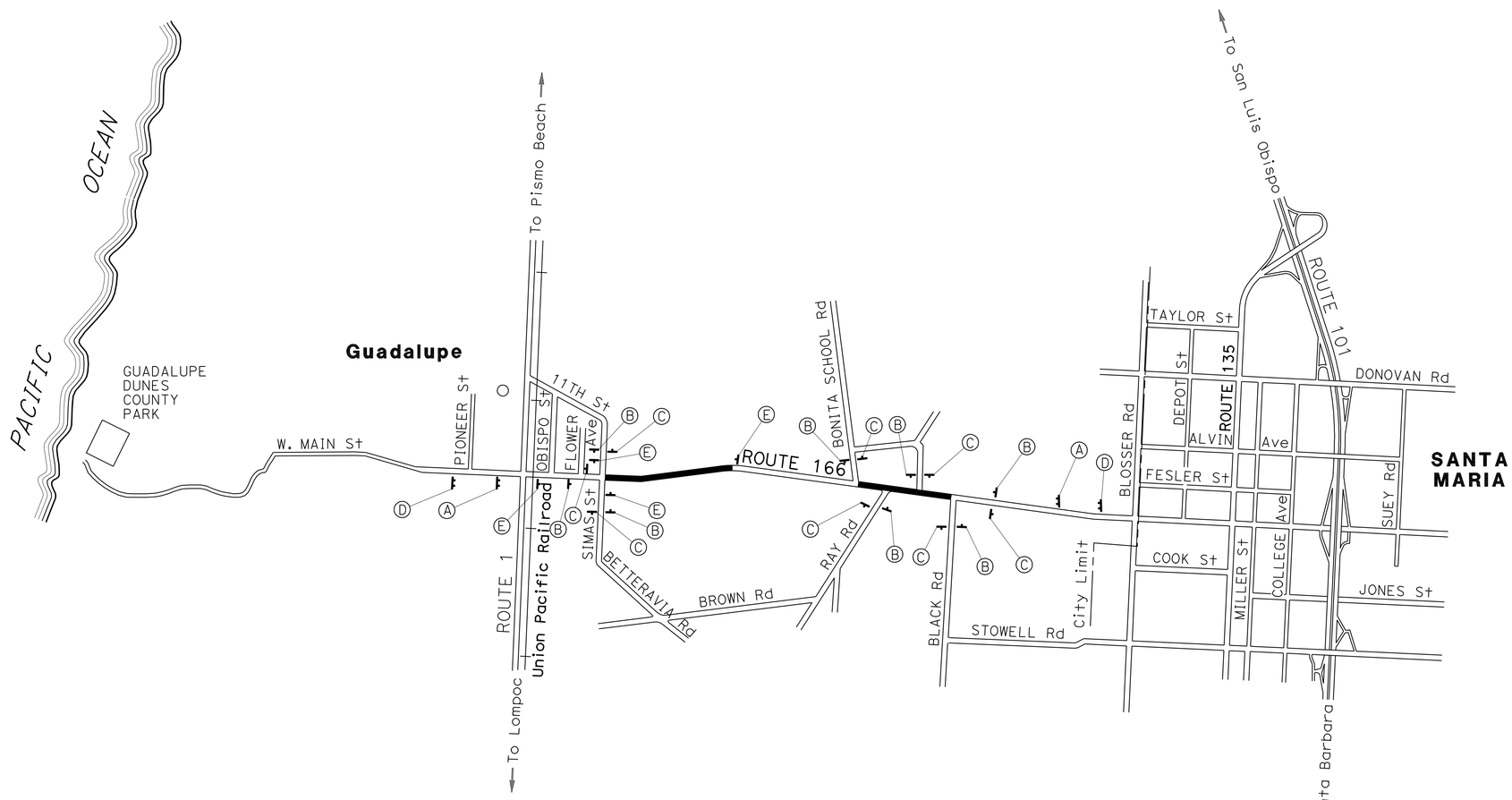

NOTES:

1. LOCATION OF CONSTRUCTION AREA SIGNS ARE APPROXIMATE. EXACT LOCATIONS WILL BE DETERMINED BY THE ENGINEER.
2. FOR ADDITONAL CONSTRUCTION AREA SIGNS, SEE TRAFFIC HANDLING PLANS.

APPROVED FOR CONSTRUCTION AREA SIGN WORK ONLY

CONSTRUCTION AREA SIGNS
NO SCALE
CS-1

STATE OF CALIFORNIA - DEPARTMENT OF TRANSPORTATION
Caltrans
TRAFFIC DESIGN

FUNCTIONAL SUPERVISOR: MOHAMMED QATAMI
CALCULATED-DESIGNED BY: GURMIT GILL
CHECKED BY: FAWZI YAGHMOUR
REVISED BY
DATE REVISED

LAST REVISION 5-24-12
DATE PLOTTED => 07-JAN-2013
TIME PLOTTED => 14:38

Dist	COUNTY	ROUTE	POST MILES TOTAL PROJECT	SHEET No.	TOTAL SHEETS
05	SB	166	0.9/2.4,3.8/4.8	72	84

REGISTERED CIVIL ENGINEER 5-24-12 DATE

7-30-12
PLANS APPROVAL DATE

REGISTERED PROFESSIONAL ENGINEER MARK S. LEICHTFUSS No. 69124 Exp. 6-30-12 CIVIL STATE OF CALIFORNIA

THE STATE OF CALIFORNIA OR ITS OFFICERS OR AGENTS SHALL NOT BE RESPONSIBLE FOR THE ACCURACY OR COMPLETENESS OF SCANNED COPIES OF THIS PLAN SHEET.

LEGEND:

- (X) ROADSIDE SIGN (WITH NUMBER)
- ROADSIDE SIGN (ONE- POST)
- <No> THERMOPLASTIC TRAFFIC STRIPE DETAIL NUMBER
- ▲ RESET ROADSIDE SIGN
- IL OBJECT MARKER TYPE L-1 (OM2-1V OR 2V)
- ⇨ DIRECTION OF TRAFFIC
- IF DELINEATOR TYPE F-1

NOTE: EXACT LOCATION AND POSITION OF SIGNS TO BE DETERMINED BY THE ENGINEER.

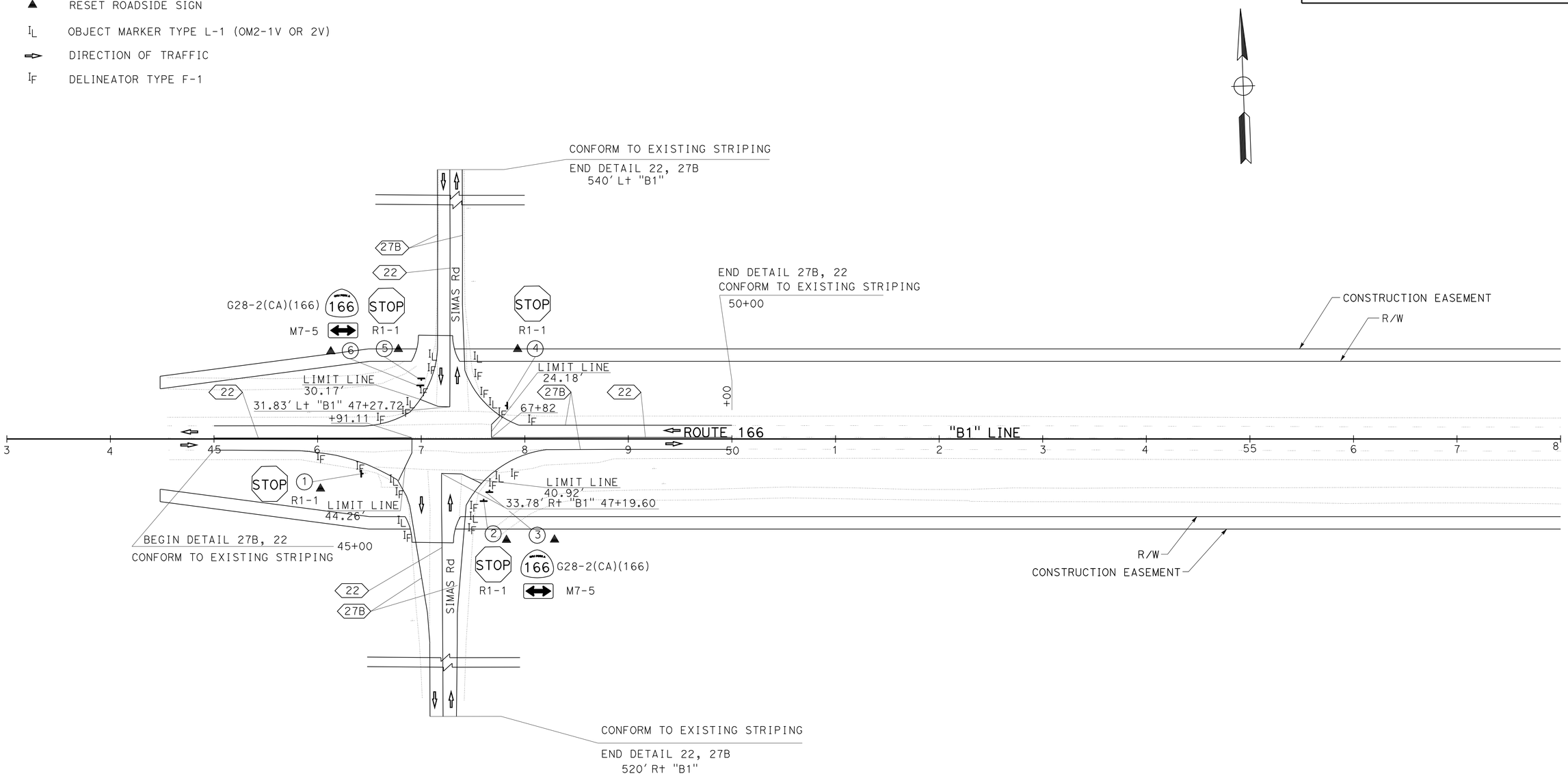

PAVEMENT DELINEATION AND SIGN PLAN

SCALE: 1" = 50'

PD-1

APPROVED FOR PAVEMENT DELINEATION AND SIGN WORK ONLY

STATE OF CALIFORNIA - DEPARTMENT OF TRANSPORTATION
Caltrans
DESIGN

FUNCTIONAL SUPERVISOR: RON R. KRAEMER

CALCULATED-DESIGNED BY: GURMIT GILL
CHECKED BY: MARK S. LEICHTFUSS

REVISED BY | DATE REVISED

LAST REVISION 5-24-12 | DATE PLOTTED => 07-JAN-2013 | TIME PLOTTED => 14:38

Dist	COUNTY	ROUTE	POST MILES TOTAL PROJECT	SHEET No.	TOTAL SHEETS
05	SB	166	0.9/2.4,3.8/4.8	73	84

REGISTERED CIVIL ENGINEER 5-24-12 DATE

7-30-12
PLANS APPROVAL DATE

REGISTERED PROFESSIONAL ENGINEER MARK S. LEICHTFUSS No. 69124 Exp. 6-30-12 CIVIL STATE OF CALIFORNIA

THE STATE OF CALIFORNIA OR ITS OFFICERS OR AGENTS SHALL NOT BE RESPONSIBLE FOR THE ACCURACY OR COMPLETENESS OF SCANNED COPIES OF THIS PLAN SHEET.

PAVEMENT DELINEATION QUANTITIES

SHEET No.	DETAIL No.	PAVEMENT MARKER (RETROREFLECTIVE)	OBJECT MARKER (TYPE L)	DELINEATOR (CLASS 1)	4" THERMOPLASTIC TRAFFIC STRIPE		THERMOPLASTIC PAVEMENT MARKING
					WHITE SOLID	YELLOW SOLID	LIMIT LINE
		EA	EA	EA	LF	LF	SQFT
L-3			2				
L-4			1				
L-5			2				
L-6			1				
L-7				11			
L-8			1	2			
L-9			1				
L-10			1				
PD-1	22	44	8	16		1012	30.20
	22	43				972	40.92
	22	37				847	68.44
	27B				1400		
	27B				1464		
SUB TOTAL		124	17	29	2,864	2,831	139.56
TOTAL		124	17	29	5,695		139.56

PAVEMENT DELINEATION QUANTITIES

PDQ-1

STATE OF CALIFORNIA - DEPARTMENT OF TRANSPORTATION
Caltrans DESIGN

FUNCTIONAL SUPERVISOR: RON R. KRAEMER
CALCULATED-DESIGNED BY: GURMIT GILL
CHECKED BY: AMJED HETTINI
REVISED BY
DATE REVISED

LAST REVISION 5-24-12
DATE PLOTTED => 07-JAN-2013
TIME PLOTTED => 14:54

Dist	COUNTY	ROUTE	POST MILES TOTAL PROJECT	SHEET No.	TOTAL SHEETS
05	SB	166	0.9/2.4,3.8/4.8	74	84

REGISTERED CIVIL ENGINEER 5-24-12 DATE

7-30-12
PLANS APPROVAL DATE

REGISTERED PROFESSIONAL ENGINEER MARK S. LEICHTFUSS No. 69124 Exp. 6-30-12 CIVIL STATE OF CALIFORNIA

THE STATE OF CALIFORNIA OR ITS OFFICERS OR AGENTS SHALL NOT BE RESPONSIBLE FOR THE ACCURACY OR COMPLETENESS OF SCANNED COPIES OF THIS PLAN SHEET.

NOTES:

1. EXACT ROADSIDE SIGN LOCATIONS AND POSITIONS TO BE DETERMINED BY THE ENGINEER.
2. R1-1 SIGNS Nos. 1, 2, 4, and 5 SHALL BE MOUNTED ON 1-A STANDARD SHOWN ON PLAN Sht E-1.

ROADSIDE SIGN QUANTITIES

PLAN SHEET No.	SIGN No. (XX)	SIGN CODE	SIGN MESSAGE	RESET ROADSIDE SIGN (ONE POST)	RESET MILEPOST MARKER
				EA	EA
L-1	1	R1-1	STOP (SEE NOTE 2)	1	
	2	R1-1	STOP (SEE NOTE 2)	1	
	3	G28-1	SHIELD 166	1	
		W1-7	ARROW BOTH DIRECTION		
	4	R1-1	STOP (SEE NOTE 2)	1	
	5	R1-1	STOP (SEE NOTE 2)	1	
	6	G28-1	SHIELD 166	1	
		W1-7	ARROW BOTH DIRECTION		
	7	D11-1	BIKE ROUTE	1	
	8	R48	SPEED CHECKED BY RADAR	1	
	9	D11-1	BIKE ROUTE	1	
	10	S30-4	TURN ON HEADLIGHTS	1	
	11	D3-1	SIMAS	1	
	12	G81-66	REPORT DRUNK DRIVERS, CALL 911	1	
L-2	13	W3-1	STOP AHEAD WARNING SIGN	1	
L-5	14	S32	ADOPT-A-HIGHWAY	1	2
		S32-1	collecting trash		
	15	S32	ADOPT-A-HIGHWAY	1	
		S32-1	collecting trash		
L-7	16	S5-2	END SCHOOL ZONE	1	
	17	S4-3	SCHOOL	1	
		R2-1	SPEED LIMIT 25 (SCHOOL ZONE)		
L-8	18	G8-1	RAY ROAD	1	2
		G1-1	BETTEREVIA 3		
	19	R1-1	STOP	1	
	20	G28-1	SHIELD 166	1	
		W1-7	ARROW BOTH DIRECTION		
	21	S30-4	TURN ON HEADLIGHTS	1	
	22	W1-7	ARROW BOTH DIRECTION	1	
		OM3-1	OBJECT MARKER TYPE I		
L-9	23	D3-1	RAY ROAD	1	
		G1-1	BETTEREVIA 3		
	24	S30-4	TURN ON HEADLIGHTS	1	
L-10	25	S32	ADOPT-A-HIGHWAY	1	
		S32-1	collecting trash		
	26	S32	ADOPT-A-HIGHWAY	1	
		S32-1	collecting trash		
	27	R2-1	SPEED LIMIT 55	1	
	28	S30-4	TURN ON HEADLIGHTS	1	
L-11	29	R1-1	STOP	1	
	30	G28-1	SHIELD 166	1	
		W1-7	ARROW BOTH DIRECTION		
			TOTAL	30	4

SIGN QUANTITIES
SQ-1

STATE OF CALIFORNIA - DEPARTMENT OF TRANSPORTATION
Caltrans DESIGN

FUNCTIONAL SUPERVISOR: RON R. KRAEMER
CALCULATED-DESIGNED BY: MARK S. LEICHTFUSS
CHECKED BY: RAHIM IBRAHIMI
REVISED BY
DATE REVISED

LAST REVISION 5-24-12
DATE PLOTTED => 07-JAN-2013
TIME PLOTTED => 14:38

Dist	COUNTY	ROUTE	POST MILES TOTAL PROJECT	SHEET No.	TOTAL SHEETS
05	SB	166	0.9/2.4,3.8/4.8	75	84

Mark S. Leichtfuss 5-24-12
REGISTERED CIVIL ENGINEER DATE

7-30-12
PLANS APPROVAL DATE

REGISTERED PROFESSIONAL ENGINEER MARK S. LEICHTFUSS No. 69124 Exp. 6-30-12 CIVIL STATE OF CALIFORNIA

THE STATE OF CALIFORNIA OR ITS OFFICERS OR AGENTS SHALL NOT BE RESPONSIBLE FOR THE ACCURACY OR COMPLETENESS OF SCANNED COPIES OF THIS PLAN SHEET.

ROADWAY QUANTITIES

STATION	LOCATION	HOT MIX ASPHALT (TYPE A)	CLASS 2 AGGREGATE BASE (CY)	ROADWAY EXCAVATION	(N) EMBANKMENT	REMOVE AC SURFACING
		TON	CY	CY	CY	SQFT
"B1" 47+20.00	R†	102.2	100.9			
"B1" 47+30.00	L†	70.7	14.0			
"B1" 48+50.00	R†	46.5	6.9			
"B1" 59+42.88	R†		30.3			
"B1" 63+17.58	L†		21.8			
"B1" 71+64.20	R†		21.3			
"B1" 73+39.09	L†	32.0	31.6			
"B1" 79+90.58	R†		19.6			
"B1" 90+98.98	R†		21.6			
"B1" 91+12.22	L†	30.5	30.1			
"B1" 101+90.70	L†	23.9	23.6			
"B1" 102+05.68	R†		46.1			
"B1" 105+11.60	L†	39.2	38.7			
"B1" 111+84.11	L†		23.1			
"B1" 113+03.13	L†		26.9			
"B1" 121+68.82	L†	27.5	27.2			
"B1" 121+75.54	R†		22.5			
"B1" 201+51.89	R†		29.1			
"B1" 214+87.58	L†	166.6	164.6			1326
"B1" 214+95.00	R†	76.5	75.6			
"B1" 225+32.41	R†		50.2			
"B1" 234+96.65	R†		24.0			
"B1" 247+38.09	L†	87.8	86.7			
"B1" 254+30.18		96.0	94.9			
"B1" 254+35.00	R†	68.3	67.4			
"D1" 44+60.00 TO "D1" 126+20.00	L†			15,432	9,793	
"D2" 44+60.00 TO "D2" 126+20.00	R†			16,176	6,406	
"D3" 202+00.00 TO "D3" 256+20.00	L†			12,516	10,478	
"D4" 199+50.00 TO "D4" 256+20.00	R†			17,261	7,570	
TOTAL		867.7	1,098.7	61,385		1326

(N) NOT A SEPARATE PAY ITEM, FOR INFORMATION ONLY.

FENCE (TYPE BW, 5 STRAND, METAL POST)

STATION	FENCE (TYPE BW, 5 STRAND, METAL POST)	STATION	FENCE (TYPE BW, 5 STRAND, METAL POST)
LEFT SIDE	LF	RIGHT SIDE	LF
"B1" 197+82.21 TO "B1" 198+26.49	69	"B1" 199+54.01 TO "B1" 201+39.15	185
"B1" 198+26.49 TO "B1" 202+96.60	470	"B1" 201+69.15 TO "B1" 213+90.94	1,223
"B1" 202+96.60 TO "B1" 204+95.95	200	"B1" 213+90.94 TO "B1" 214+33.65	59
"B1" 204+95.95 TO "B1" 214+29.15	934	"B1" 214+98.54 TO "B1" 215+46.79	71
"B1" 214+29.15 TO "B1" 214+39.66	27	"B1" 215+46.79 TO "B1" 225+20.74	976
"B1" 214+70.40 TO "B1" 214+83.90	28	"B1" 225+50.74 TO "B1" 225+50.10	8
"B1" 214+83.90 TO "B1" 234+72.87	1,985	"B1" 225+50.10 TO "B1" 253+63.83	2,814
"B1" 235+11.00 TO "B1" 247+23.09	1,212	"B1" 253+63.83 TO "B1" 254+13.84	71
"B1" 247+53.09 TO "B1" 252+80.17	527	"B1" 254+73.97 TO "B1" 255+24.00	71
"B1" 252+80.17 TO "B1" 253+43.18	89	"B1" 255+24.00 TO "B1" 256+20.00	96
"B1" 255+17.18 TO "B1" 255+80.17	89		
"B1" 255+80.17 TO "B1" 256+20.00	40		
L† SUBTOTAL	5,670	R† SUBTOTAL	5,574
		L† SUBTOTAL	5,670
		TOTAL	11,244

RESET MAILBOX

STATION	SIDE	RESET MAILBOX	NEWSPAPER BOX (N)
		EA	
"B1" 73+68.97	L†	1	
"B1" 80+12.17	R†	1	
"B1" 91+40.70	L†	1	
"B1" 104+85.41	L†	4	1
"B1" 113+27.25	R†	1	
"B1" 122+08.05	L†	2	1
"B1" 215+22.94	R†	1	
"B1" 225+28.16	R†	3	1
"B1" 247+65.34	R†	1	
TOTAL		15	

(N) NOT A SEPARATE PAY ITEM, FOR INFORMATION ONLY.

METAL BEAM GUARD RAILING

STATION	LOCATION	RECONSTRUCT MBGR	REMOVE MBGR	MBGR (STEEL POST)	ALTERNATIVE IN-LINE TERMINAL SYSTEM
		LF	LF	LF	EA
"B1" 197+62.7 TO "B1" 200+27.3	L†	265			
"B1" 197+62.7	L†				1
"B1" 200+27.3 TO "B1" 200+75.7	L†		48		
"B1" 200+27.3 TO "B1" 207+22.0	L†			695	
"B1" 207+22.0	L†				1
TOTAL		265	48	695	2

WATER POLLUTION CONTROL

STATION	LOCATION	TEMPORARY FENCE (TYPE ESA)	Temp Const ENTRANCE	Temp CHECK DAMS
		LF	EA	LF
"B1" 198+26.5 TO "B1" 203+18.9	L†	504		
"B1" 199+15.2 TO "B1" 199+76.5	R†	65		
"B1" 44+60.0 TO "B1" 256+20.0			8	
"B1" 44+60.0 TO "B1" 256+20.0				200
TOTAL		569	8	200

SUMMARY OF QUANTITIES
Q-1

STATE OF CALIFORNIA - DEPARTMENT OF TRANSPORTATION
Caltrans® DESIGN

FUNCTIONAL SUPERVISOR: RON R. KRAEMER
CALCULATED-DESIGNED BY: MARK S. LEICHTFUSS
CHECKED BY: QUAY CHESTER
REVISED BY
DATE REVISED

LAST REVISION 5-24-12
DATE PLOTTED => 07-JAN-2013
TIME PLOTTED => 14:38

Dist	COUNTY	ROUTE	POST MILES TOTAL PROJECT	SHEET No.	TOTAL SHEETS
05	SB	166	0.9/2.4,3.8/4.8	76	84

Xavier Alfaro 5-24-12
REGISTERED ELECTRICAL ENGINEER

7-30-12
PLANS APPROVAL DATE

REGISTERED PROFESSIONAL ENGINEER XAVIER I. ALFARO No. E17488 Exp. 6-30-13 ELECTRICAL STATE OF CALIFORNIA

THE STATE OF CALIFORNIA OR ITS OFFICERS OR AGENTS SHALL NOT BE RESPONSIBLE FOR THE ACCURACY OR COMPLETENESS OF SCANNED COPIES OF THIS PLAN SHEET.

NOTE:

1. FOR ACCURATE RIGHT OF WAY AND ACCESS DATA, CONTACT RIGHT OF WAY ENGINEERING AT THE DISTRICT OFFICE.

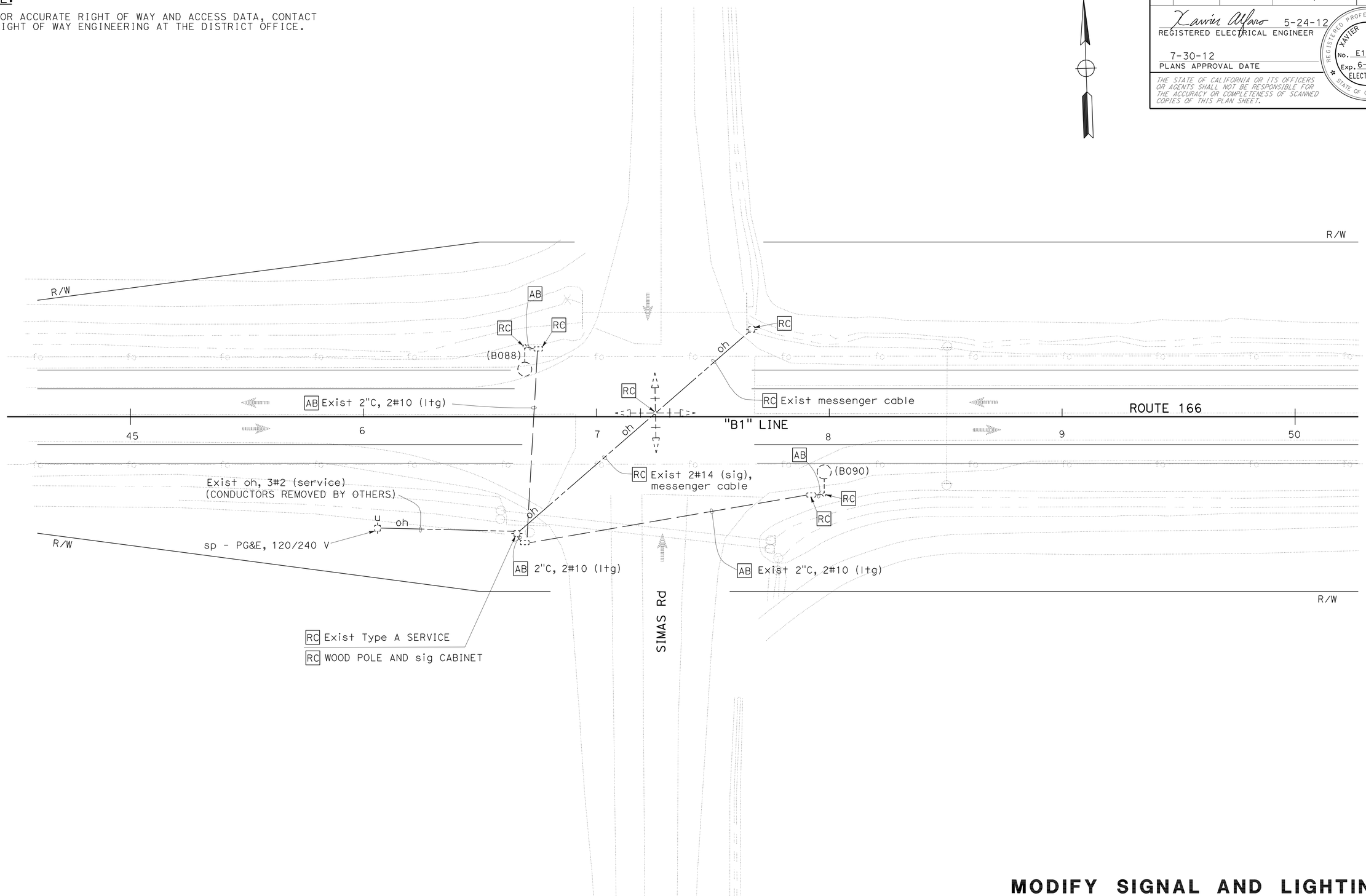

MODIFY SIGNAL AND LIGHTING

SCALE: 1" = 20'

E-1

APPROVED FOR ELECTRICAL WORK ONLY

STATE OF CALIFORNIA - DEPARTMENT OF TRANSPORTATION
Caltrans® **ELECTRICAL DESIGN**

FUNCTIONAL SUPERVISOR: ALI BAKHDOUD
CALCULATED-DESIGNED BY: XAVIER ALFARO
CHECKED BY: RAJPREET SINGH
REVISED BY
DATE REVISED

LAST REVISION 5-24-12
DATE PLOTTED => 07-JAN-2013
TIME PLOTTED => 14:38

Dist	COUNTY	ROUTE	POST MILES TOTAL PROJECT	SHEET No.	TOTAL SHEETS
05	SB	166	0.9/2.4,3.8/4.8	77	84

Xavier Alfaro 5-24-12
REGISTERED ELECTRICAL ENGINEER

7-30-12
PLANS APPROVAL DATE

REGISTERED PROFESSIONAL ENGINEER XAVIER I. ALFARO No. E17488 Exp. 6-30-13 ELECTRICAL STATE OF CALIFORNIA

THE STATE OF CALIFORNIA OR ITS OFFICERS OR AGENTS SHALL NOT BE RESPONSIBLE FOR THE ACCURACY OR COMPLETENESS OF SCANNED COPIES OF THIS PLAN SHEET.

NOTES:

1 120/240 V, 1Ø, 3-WIRE TYPE III-BF SERVICE EQUIPMENT ENCLOSURE WITH THE FOLLOWING CIRCUIT BREAKERS:

CTID No. 05511660000900S

AMPERE	VOLT	POLES	LOAD	METER	PHOTOELECTRIC CONTROL TYPE
100	240	2	MAIN BREAKER	YES	——
15	120	1	FBCA EB AND NB	YES	——
15	120	1	FBCA WB AND SB	YES	——
20	240	2	HIGHWAY LIGHTING	YES	V
——	——	6	SPACE	YES	——

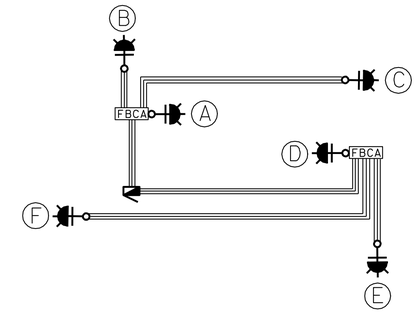

FLASHING BEACON WIRING DIAGRAM

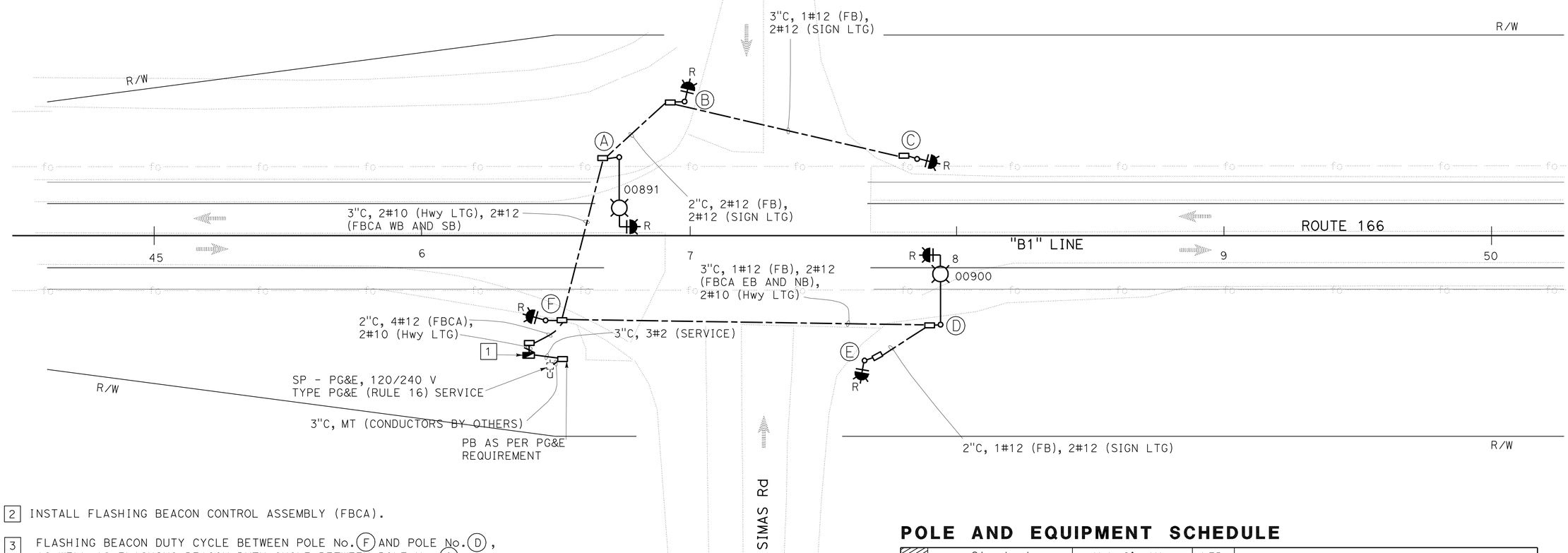

2 INSTALL FLASHING BEACON CONTROL ASSEMBLY (FBCA).

3 FLASHING BEACON DUTY CYCLE BETWEEN POLE No. F AND POLE No. D, AS WELL AS FLASHING BEACON DUTY CYCLE BETWEEN POLE No. C AND POLE No. A SHALL BE OFF-SET (WIG-WAG).

4 INSTALL SIGN LIGHTING FIXTURE PER STANDARD PLANS ES-7J.

5. FOR ACCURATE RIGHT OF WAY AND ACCESS DATA, CONTACT RIGHT OF WAY ENGINEERING AT THE DISTRICT OFFICE.

ABBREVIATION:

PG&E PACIFIC GAS AND ELECTRIC

POLE AND EQUIPMENT SCHEDULE

	Standard			Veh Sig Mtg		LED Lum (W)	Special Requirements
No	Type	SMA (FT)	LMA (FT)	Mast Arm	POLE		
A	19-2-100	25	15	MAS	-	165	2 3
B	1-A	-	-	-	-	-	5 INSTALL R1-1 SIGN (SEE SIGN QUANTITIES PLAN FOR DETAILS)
C	1-A	-	-	-	-	-	3 INSTALL R1-1 SIGN (SEE SIGN QUANTITIES PLAN FOR DETAILS)
D	19-2-100	25	15	MAS	-	165	2 3
E	1-A	-	-	-	-	-	5 INSTALL R1-1 SIGN (SEE SIGN QUANTITIES PLAN FOR DETAILS)
F	1-A	-	-	-	-	-	3 INSTALL R1-1 SIGN (SEE SIGN QUANTITIES PLAN FOR DETAILS)

MODIFY SIGNAL AND LIGHTING

SCALE: 1" = 20'

E-2

APPROVED FOR ELECTRICAL WORK ONLY

STATE OF CALIFORNIA - DEPARTMENT OF TRANSPORTATION
Caltrans® ELECTRICAL DESIGN

FUNCTIONAL SUPERVISOR: ALI BAKHDOUD
CALCULATED-DESIGNED BY: XAVIER ALFARO
CHECKED BY: RAJPREET SINGH
REVISED BY
DATE REVISED

LAST REVISION 5-24-12
DATE PLOTTED => 07-JAN-2013
TIME PLOTTED => 14:56

Dist	COUNTY	ROUTE	POST MILES TOTAL PROJECT	SHEET No.	TOTAL SHEETS
05	SB	166	0.9/2.4,3.8/4.8	78	84

Xavier Alfaro 5-24-12
REGISTERED ELECTRICAL ENGINEER

7-30-12
PLANS APPROVAL DATE

REGISTERED PROFESSIONAL ENGINEER XAVIER I. ALFARO No. E17488 Exp. 6-30-13 ELECTRICAL STATE OF CALIFORNIA

THE STATE OF CALIFORNIA OR ITS OFFICERS OR AGENTS SHALL NOT BE RESPONSIBLE FOR THE ACCURACY OR COMPLETENESS OF SCANNED COPIES OF THIS PLAN SHEET.

NOTES:

1. FOR ACCURATE RIGHT OF WAY AND ACCESS DATA, CONTACT RIGHT OF WAY ENGINEERING AT THE DISTRICT OFFICE.

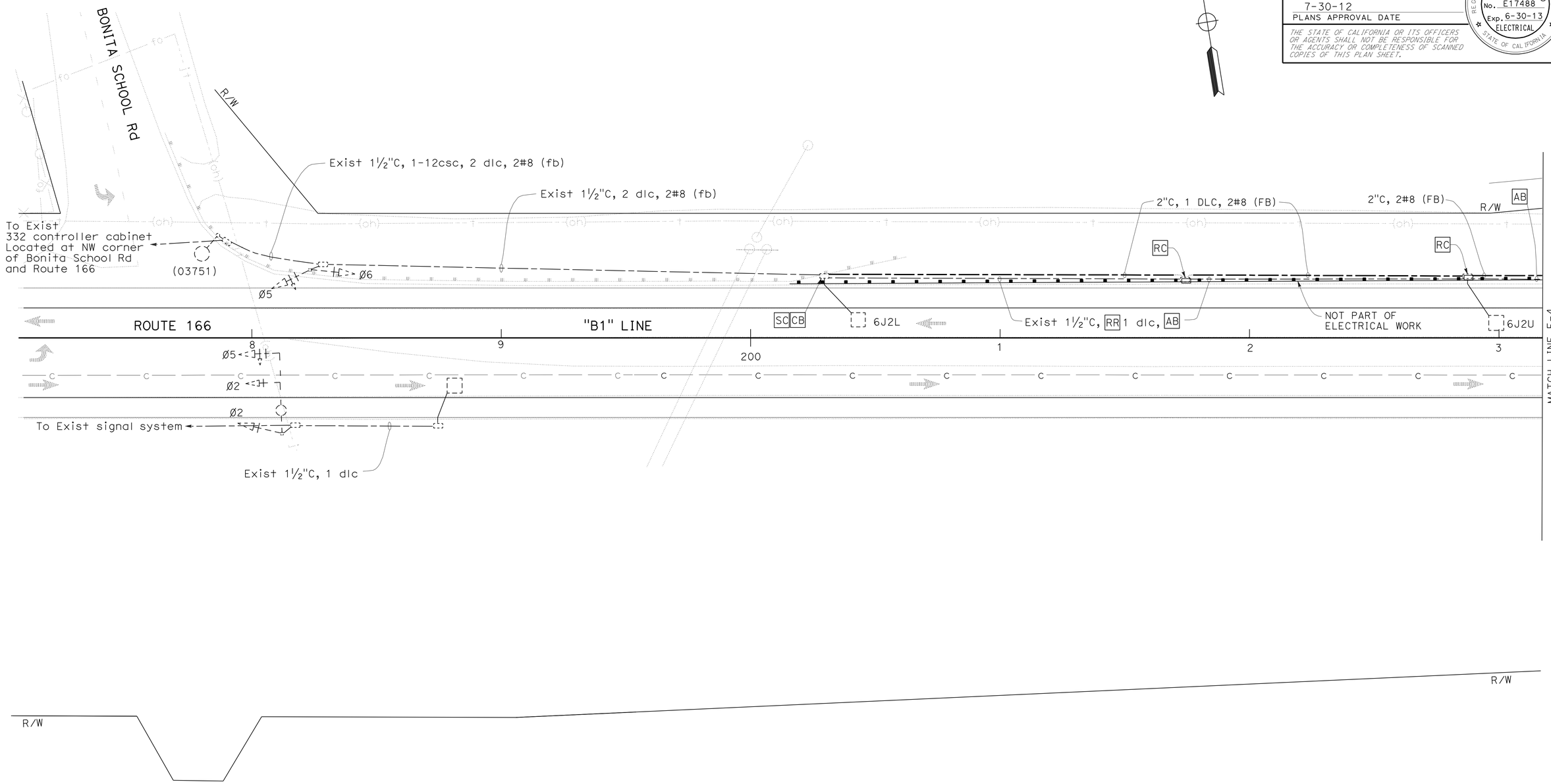

MODIFY SIGNAL AND LIGHTING

SCALE: 1" = 20'

E-3

APPROVED FOR ELECTRICAL WORK ONLY

STATE OF CALIFORNIA - DEPARTMENT OF TRANSPORTATION
Caltrans® ELECTRICAL DESIGN

FUNCTIONAL SUPERVISOR: ALI BAKHDOUD

CALCULATED-DESIGNED BY: XAVIER ALFARO
CHECKED BY: RAJPREET SINGH

REVISED BY | DATE REVISED

LAST REVISION 5-24-12
DATE PLOTTED => 07-JAN-2013
TIME PLOTTED => 14:38

Dist	COUNTY	ROUTE	POST MILES TOTAL PROJECT	SHEET No.	TOTAL SHEETS
05	SB	166	0.9/2.4,3.8/4.8	79	84

Xavier Alfaro 5-24-12
REGISTERED ELECTRICAL ENGINEER

7-30-12
PLANS APPROVAL DATE

REGISTERED PROFESSIONAL ENGINEER XAVIER I. ALFARO No. E17488 Exp. 6-30-13 ELECTRICAL STATE OF CALIFORNIA

THE STATE OF CALIFORNIA OR ITS OFFICERS OR AGENTS SHALL NOT BE RESPONSIBLE FOR THE ACCURACY OR COMPLETENESS OF SCANNED COPIES OF THIS PLAN SHEET.

NOTES:

1 PROTECT IN PLACE EXISTING ELECTRICAL CONDUIT CROSSING.

2. FOR ACCURATE RIGHT OF WAY AND ACCESS DATA, CONTACT RIGHT OF WAY ENGINEERING AT THE DISTRICT OFFICE.

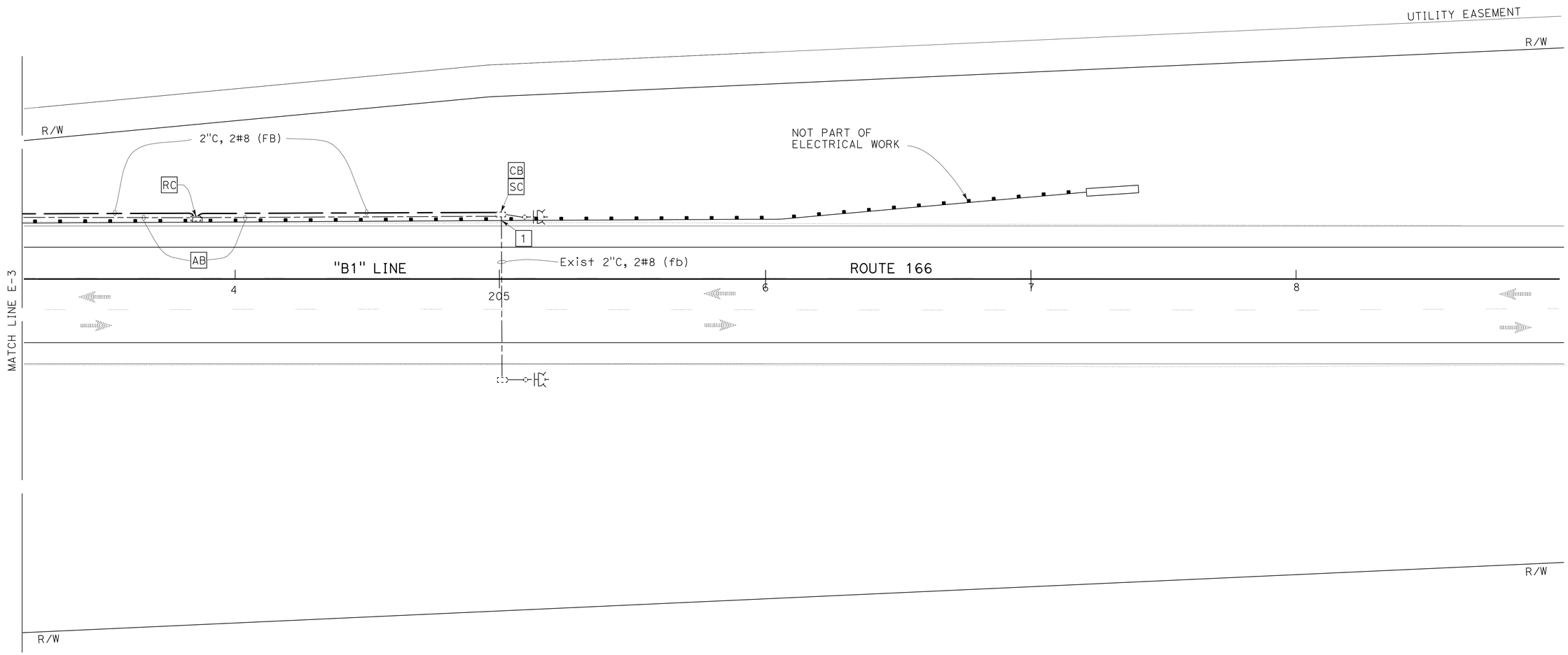

APPROVED FOR ELECTRICAL WORK ONLY

MODIFY SIGNAL AND LIGHTING

SCALE: 1" = 20'

E-4

REVISED BY | DATE REVISED
XAVIER ALFARO | RAJPREET SINGH
CALCULATED-DESIGNED BY | CHECKED BY
FUNCTIONAL SUPERVISOR | ALI BAKHOUD

STATE OF CALIFORNIA - DEPARTMENT OF TRANSPORTATION
Caltrans® **ELECTRICAL DESIGN**

LAST REVISION 5-24-12 | DATE PLOTTED => 07-JAN-2013 TIME PLOTTED => 14:39

Dist	COUNTY	ROUTE	POST MILES TOTAL PROJECT	SHEET No.	TOTAL SHEETS
05	SB	166	0.9/2.4,3.8/4.8	80	84

Xavier Alfaro 5-24-12
REGISTERED ELECTRICAL ENGINEER

7-30-12
PLANS APPROVAL DATE

REGISTERED PROFESSIONAL ENGINEER XAVIER I. ALFARO No. E17488 Exp. 6-30-13 ELECTRICAL STATE OF CALIFORNIA

THE STATE OF CALIFORNIA OR ITS OFFICERS OR AGENTS SHALL NOT BE RESPONSIBLE FOR THE ACCURACY OR COMPLETENESS OF SCANNED COPIES OF THIS PLAN SHEET.

NOTE:

1. FOR ACCURATE RIGHT OF WAY AND ACCESS DATA, CONTACT RIGHT OF WAY ENGINEERING AT THE DISTRICT OFFICE.

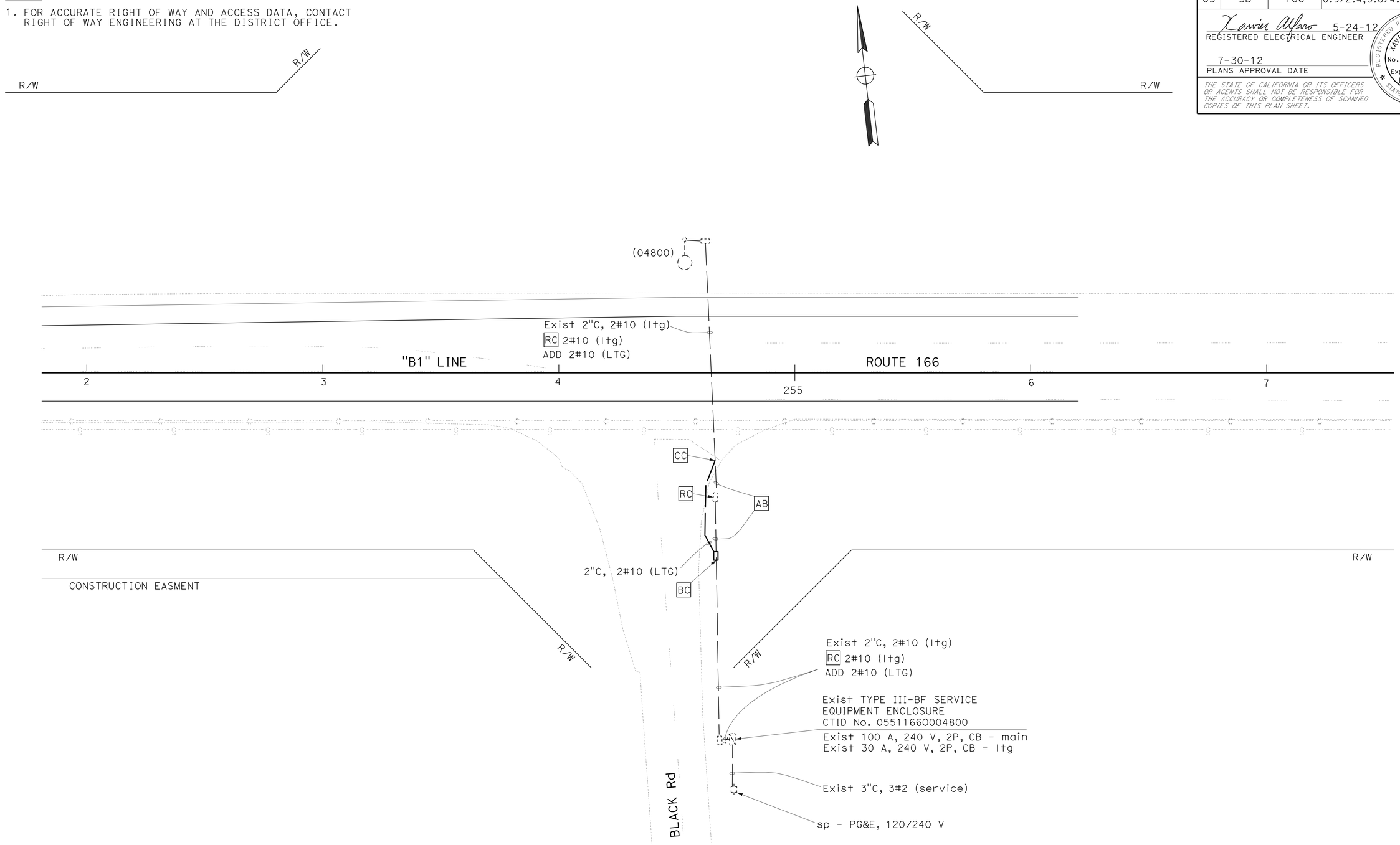

APPROVED FOR ELECTRICAL WORK ONLY

MODIFY LIGHTING

SCALE: 1" = 20'

E-5

REVISED BY	DATE REVISED

CALCULATED-DESIGNED BY	CHECKED BY
XAVIER ALFARO	RAJPREET SINGH

FUNCTIONAL SUPERVISOR: ALI BAKHDOUD

STATE OF CALIFORNIA - DEPARTMENT OF TRANSPORTATION

Caltrans® **ELECTRICAL DESIGN**

LAST REVISION 5-24-12

DATE PLOTTED => 07-JAN-2013
TIME PLOTTED => 14:39

Dist	COUNTY	ROUTE	POST MILES TOTAL PROJECT	SHEET No.	TOTAL SHEETS
05	SB	166	0.9/2.4,3.8/4.8	81	84

REGISTERED CIVIL ENGINEER 12-7-12 DATE

7-30-12
PLANS APPROVAL DATE

REGISTERED PROFESSIONAL ENGINEER Gurinderpal Bhullar No. C48815 Exp. 9-30-14 CIVIL STATE OF CALIFORNIA

THE STATE OF CALIFORNIA OR ITS OFFICERS OR AGENTS SHALL NOT BE RESPONSIBLE FOR THE ACCURACY OR COMPLETENESS OF SCANNED COPIES OF THIS PLAN SHEET.

NOTES:

Unless otherwise specified in the special provisions, all temporary warning signs shall have black legend on orange background.

California code are designated by (CA). Otherwise, Federal (MUTCD) codes are shown.

TYPICAL LANE CLOSURE WITH REVERSIBLE CONTROL

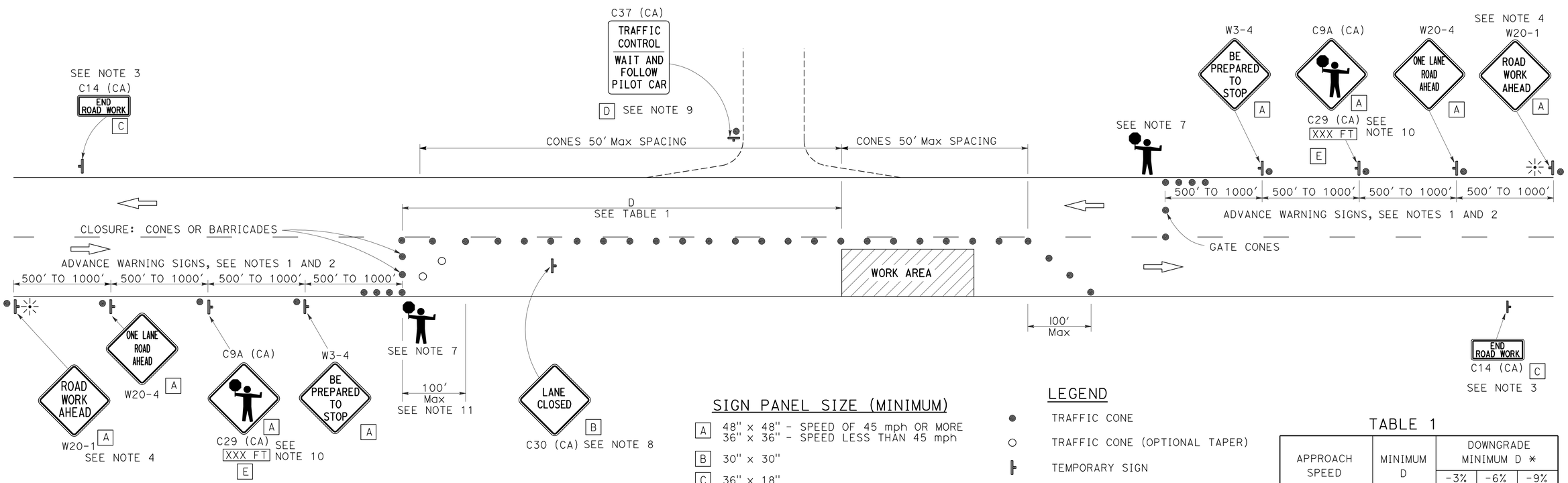

SIGN PANEL SIZE (MINIMUM)

- A — 48" x 48" - SPEED OF 45 mph OR MORE; 36" x 36" - SPEED LESS THAN 45 mph
- B — 30" x 30"
- C — 36" x 18"
- D — 36" x 42"
- E — 36" x 9"

LEGEND

- TRAFFIC CONE
- TRAFFIC CONE (OPTIONAL TAPER)
- TEMPORARY SIGN
- PORTABLE FLASHING BEACON
- FLAGGER

TABLE 1

APPROACH SPEED	MINIMUM D	DOWNGRADE MINIMUM D *		
		-3%	-6%	-9%
mph	ft	ft	ft	ft
25 AND BELOW	155	158	165	173
30	200	205	215	227
35	250	257	271	287
40	305	315	333	354
45	360	378	400	427
50	425	446	474	507
55	495	520	553	593
60	570	598	638	686
65	645	682	728	785

* USE ON SUSTAINED DOWNGRADE STEEPER THAN -3 PERCENT AND LONGER THAN 1 MILE.

NOTES:

1. Where approach speeds are low, advance warning signs may be placed at 300' spacing, and closer in urban areas.
2. Each advance warning sign in each direction of travel shall be equipped with at least two flags for daytime closure. Each flag shall be at least 16" x 16" in size and shall be orange or fluorescent red-orange in color. Flashing beacons shall be placed at the locations indicated for lane closure during hours of darkness.
3. A C14 (CA) "END ROAD WORK" sign, as appropriate, shall be placed at the end of the lane control unless the end of work area is obvious, or ends within a larger project's limits.
4. If the W20-1 sign would follow within 2000' of a stationary W20-1 or C11 (CA) "ROAD WORK NEXT _____MILES", use a W20-4 sign for the first advance warning sign.
5. All cones used for lane closures during the hours of darkness shall be fitted with retroreflective bands (or sleeves) as specified in the specifications.
6. Portable delineators, placed at one-half the spacing indicated for traffic cones, may be used instead of cones for daytime closures only.
7. Additional advance flaggers may be required. Flagger should stand in a conspicuous place, be visible to approaching traffic as well as approaching vehicles after the first vehicle has stopped. During the hours of darkness, the flagging-station and flagger shall be illuminated and clearly visible to approaching traffic. The illumination footprint of the lighting on the ground shall be at least 20' in diameter. Place a minimum of four cones at 50' intervals in advance of flagger station as shown.
8. Place C30 (CA) "LANE CLOSED" sign at 500' to 1000' intervals throughout extended work areas. They are optional if the work area is visible from the flagger station.
9. When a pilot car is used, place a C37 (CA) "TRAFFIC CONTROL-WAIT AND FOLLOW PILOT CAR" sign at all intersections within traffic control area. Signs shall be clean and visible at all times.
10. An optional C29 (CA) sign may be placed below the C9A (CA) sign.
11. Traffic cones or barricades may be placed on the optional taper as shown, barricades shall be Type I, II, or III.

STATE OF CALIFORNIA
DEPARTMENT OF TRANSPORTATION

TRAFFIC CONTROL SYSTEM FOR LANE CLOSURE ON TWO LANE CONVENTIONAL HIGHWAYS

NO SCALE

TCS-1

STATE OF CALIFORNIA - DEPARTMENT OF TRANSPORTATION
Caltrans

FUNCTIONAL SUPERVISOR | CALCULATED-DESIGNED BY | CHECKED BY | REVISED BY | DATE REVISED

LAST REVISION 00-00-00 | DATE PLOTTED => 08-JAN-2013 | TIME PLOTTED => 05:42

Dist	COUNTY	ROUTE	POST MILES TOTAL PROJECT	SHEET No.	TOTAL SHEETS
05	SB	166	0.9/2.4,3.8/4.8	82	84

REGISTERED CIVIL ENGINEER 12-7-12 DATE

7-30-12
PLANS APPROVAL DATE

REGISTERED PROFESSIONAL ENGINEER Gurinderpal Bhullar No. C48815 Exp. 9-30-14 CIVIL STATE OF CALIFORNIA

THE STATE OF CALIFORNIA OR ITS OFFICERS OR AGENTS SHALL NOT BE RESPONSIBLE FOR THE ACCURACY OR COMPLETENESS OF SCANNED COPIES OF THIS PLAN SHEET.

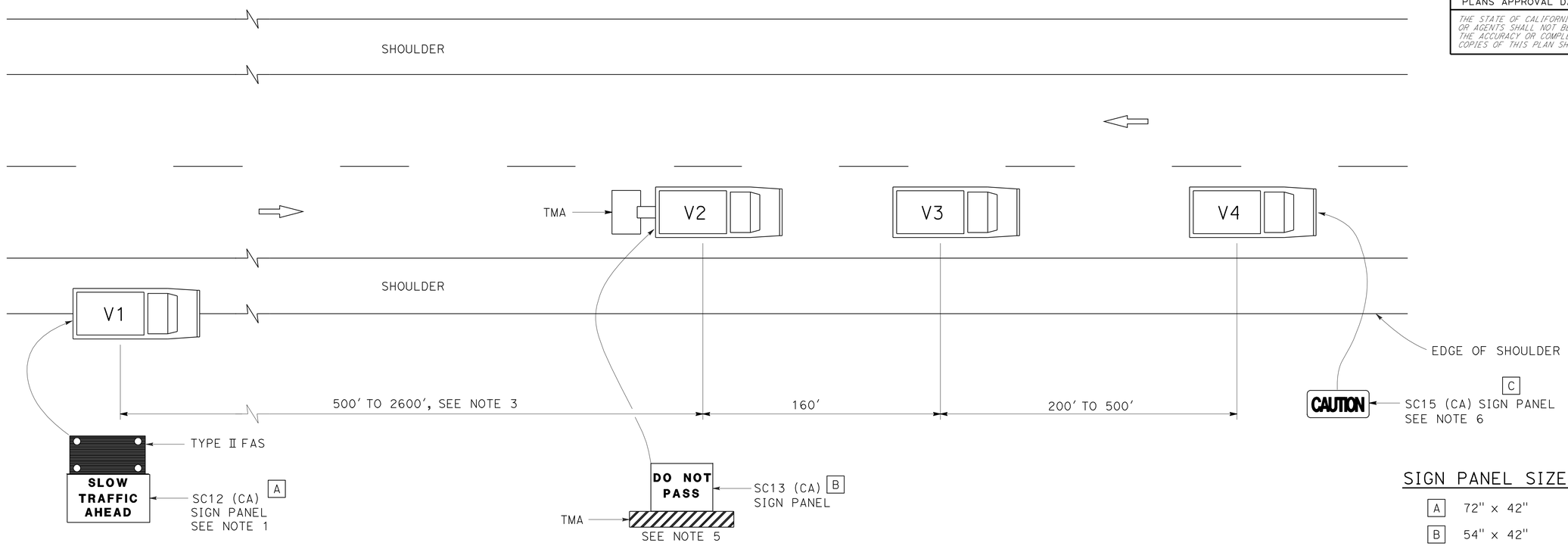

SIGN PANEL SIZE (Min)

A	72" x 42"
B	54" x 42"
C	54" x 24"

LEGEND

V1	SIGN VEHICLE
V2	SHADOW VEHICLE
V3	WORK/APPLICATION VEHICLE
V4	SIGN VEHICLE
TMA	TRUCK-MOUNTED ATTENUATOR
	FLASHING ARROW SIGN (FAS) IN FLASHING CAUTION MODE

NOTES:

1. Either a changeable message sign or a SC12 (CA) "SLOW TRAFFIC AHEAD" sign shall be mounted on the rear of sign vehicle V1. A Type II flashing arrow sign may be used with the SC12 (CA) sign panel.

2. Sign vehicle V1 should be positioned where highly visible when shoulders are not available.

3. If traffic queues develop, sign vehicle V1 should be positioned upstream from the end of queue.

4. Vehicle-mounted sign panels shall be Type III, IV VII, VIII or IX retroreflective sheeting, black on white, black on orange, or black on fluorescent orange, with 6" minimum series D letters per Caltrans sign specifications.

5. Gross Vehicle Weight of shadow vehicle shall be a minimum of 20,000 pounds and shall be equipped with a truck-mounted attenuator. The sign panel shown shall be mounted on the rear of shadow vehicle V2. The message "LANE CLOSED" may be used in place of the "DO NOT PASS" message.

6. The sign panel shown shall be mounted on the front of sign vehicle V4, facing opposing traffic.

7. All vehicles shall be equipped with flashing or rotating amber lights.

8. Sign vehicle V4 will not be required when the work and vehicles V2 and V3 are 2' or more from the centerline of the highway during the work or application operations.

9. All vehicles used for lane closures shall be equipped with two-way radios and the vehicle operators shall maintain communication during the work or application operation.

10. When multiple work vehicles are used in close proximity to each other, only one shadow vehicle is required and spacing between work vehicles shall be minimized in order to deter traffic from entering the closed lane.

STATE OF CALIFORNIA
DEPARTMENT OF TRANSPORTATION

TRAFFIC CONTROL SYSTEM FOR MOVING LANE CLOSURE ON TWO LANE HIGHWAYS

NO SCALE

TCS-2

STATE OF CALIFORNIA - DEPARTMENT OF TRANSPORTATION
Caltrans

FUNCTIONAL SUPERVISOR

CALCULATED-DESIGNED BY | CHECKED BY | REVISED BY | DATE REVISED

LAST REVISION 00-00-00 | DATE PLOTTED => 08-JAN-2013 | TIME PLOTTED => 05:42

DIST	COUNTY	ROUTE	POST MILES TOTAL PROJECT	SHEET NO.	TOTAL SHEETS
05	SB	166	0.9/2.4,3.8/4.8	83	84

REGISTERED ELECTRICAL ENGINEER

January 20, 2012
PLANS APPROVAL DATE

REGISTERED PROFESSIONAL ENGINEER Jeffery G. McRae No. E14512 Exp. 6-30-12 ELECTRICAL STATE OF CALIFORNIA

THE STATE OF CALIFORNIA OR ITS OFFICERS OR AGENTS SHALL NOT BE RESPONSIBLE FOR THE ACCURACY OR COMPLETENESS OF SCANNED COPIES OF THIS PLAN SHEET.

TO ACCOMPANY PLANS DATED 7-30-12

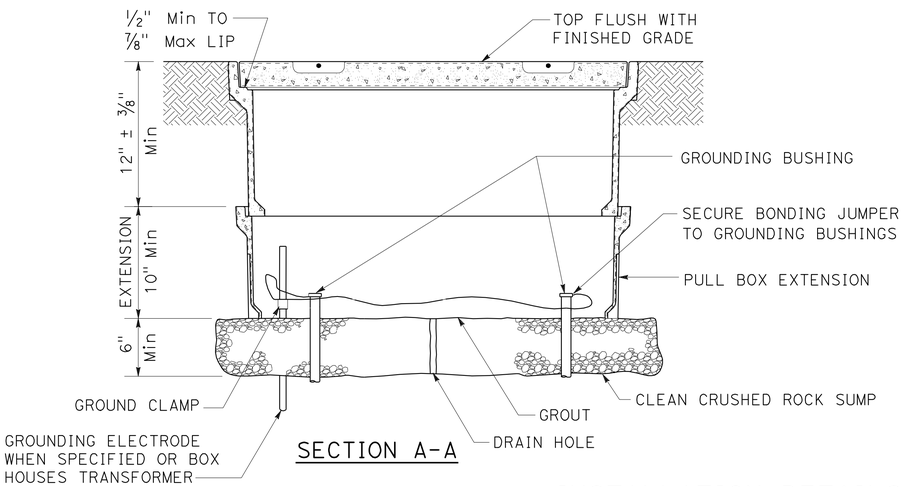

SECTION A-A

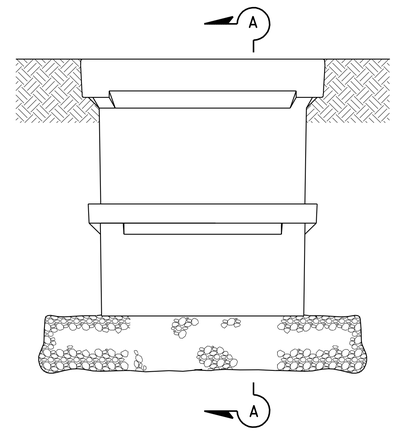

SIDE VIEW

INSTALLATION DETAILS

DETAIL A

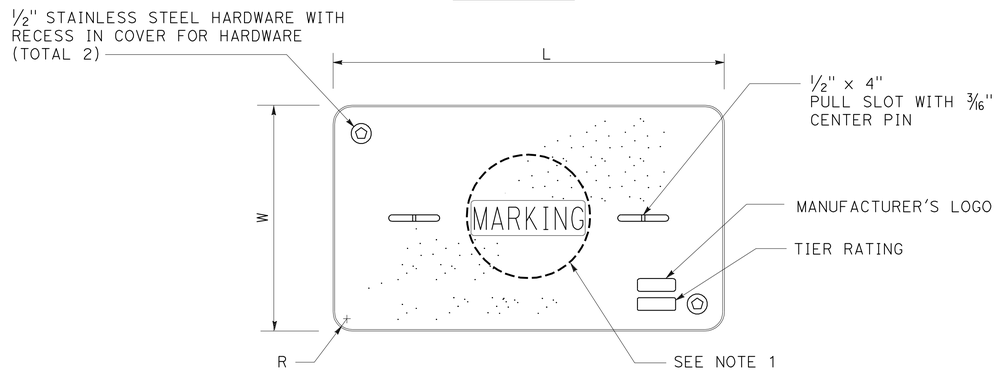

COVER TOP VIEW

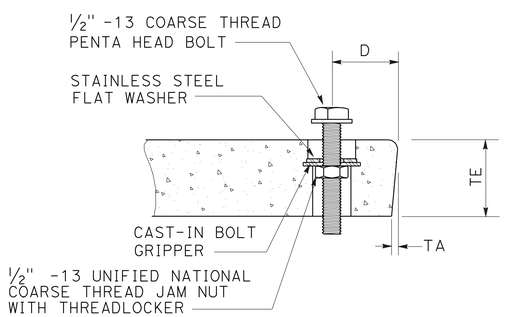

TYPICAL COVER CAPTIVE BOLT

OR SIMILAR

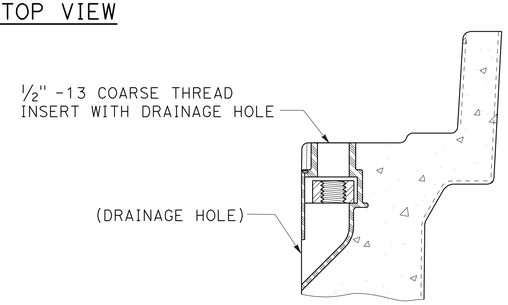

TYPICAL THREADED INSERT

OR SIMILAR

DIMENSION TABLE										
PULL BOX	PULL BOX			COVER						
	MINIMUM DEPTH BOX	MINIMUM DEPTH EXTENSION	MAXIMUM WEIGHT	L	W	R	TE	TA	D	MAXIMUM WEIGHT
No. 3 1/2	12"	N/A	40 lb	1' - 3 3/8"	10 1/8"	1 3/8"	2"	1/8"	1 3/4"	30 lb
No. 5	12"	10"	55 lb	1' - 11 1/4"	1' - 1 3/4"	1 3/8"	2"	1/8"	1 3/4"	60 lb
No. 6	12"	10"	70 lb	2' - 6 1/2"	1' - 5 1/2"	1 3/8"	2"	1/8"	2"	85 lb

NOTES ON PULL BOXES:

1. Pull box covers must be marked as follows: "SERVICE" Service circuits between service point and service disconnect; "SPRINKLER-CONTROL" sprinkler control circuits, 50 V or less; "CALTRANS" on all pull boxes, except pull boxes marked "SPRINKLER-CONTROL"; and "TELEPHONE" Telephone service;

   A) No. 3 1/2 pull box.
      1) "SIGNAL" - Traffic signal circuits with or without street or sign lighting circuits.
      2) "ST LIGHTING" - Street or sign lighting circuits where voltage is under 600 V.

   B) No. 5, 6, 9 or 9A pull box.
      1) "TRAFFIC SIGNAL" - Traffic signal circuits with or without street or sign lighting circuits.
      2) "STREET LIGHTING" - Street or sign lighting circuits where voltage is under 600 V.
      3) "STREET LIGHTING-HIGH VOLTAGE" - Street or sign lighting circuits where voltage is above 600 V.
      4) "IRRIGATION" - Circuits to irrigation controller 120 V or more.
      5) "RAMP METER" - Ramp meter circuits.
      6) "COUNT STATION" - Count or speed monitor circuits.
      7) "COMMUNICATIONS" - Communication circuits.
      8) "TOS COMMUNICATIONS" - TOS communication line.
      9) "TOS POWER" - TOS power.
      10) "TDC POWER" - Telephone demarcation cabinet power.
      11) "CCTV" - Closed circuit television circuits.
      12) "TMS" - Traffic monitoring station circuits.
      13) "CMS" - Changeable message sign circuits.
      14) "HAR" - Highway advisory radio circuits.

2. The nominal dimensions of the opening in which the cover sets must be the same as the cover dimensions (L and W) plus 1/8" or greater.

3. Covers and boxes must be interchangeable with California Standard. When interchanged with a standard, the top surfaces must be flush within 1/8". Top outside radius of covers and pull boxes must have a 1/8" radius.

4. Pull box extension may be another pull box as long as the bottom edge of the pull box can fit into the cover opening.

STATE OF CALIFORNIA
DEPARTMENT OF TRANSPORTATION

ELECTRICAL SYSTEMS (PULL BOX)

NO SCALE

RSP ES-8A DATED JANUARY 20, 2012 SUPPLEMENTS THE STANDARD PLANS BOOK DATED 2010.

REVISED STANDARD PLAN RSP ES-8A

2010 REVISED STANDARD PLAN RSP ES-8A

01-09-12

Dist	COUNTY	ROUTE	POST MILES TOTAL PROJECT	SHEET No.	TOTAL SHEETS
05	SB	166	0.9/2.4,3.8/4.8	84	84

REGISTERED ELECTRICAL ENGINEER

July 20, 2012
PLANS APPROVAL DATE

REGISTERED PROFESSIONAL ENGINEER
Jeffery G. McRae
No. E14512
Exp. 6-30-14
ELECTRICAL
STATE OF CALIFORNIA

THE STATE OF CALIFORNIA OR ITS OFFICERS OR AGENTS SHALL NOT BE RESPONSIBLE FOR THE ACCURACY OR COMPLETENESS OF SCANNED COPIES OF THIS PLAN SHEET.

TO ACCOMPANY PLANS DATED 7-30-12

ISOFOOTCANDLE CURVE - MINIMUM

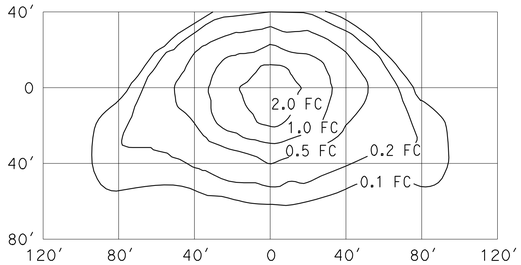

TYPE III MEDIUM CUTOFF

Cutoff Luminaire
34′ Mounting Height
Lamp operated at 22,000 lm
200-W high pressure sodium lamp
ANSI Designation S66

ISOFOOTCANDLE CURVE - MINIMUM

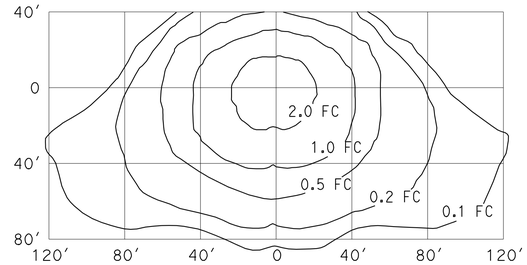

TYPE III MEDIUM CUTOFF

Cutoff Luminaire
40′ Mounting Height
Lamp operated at 37,000 lm
310-W high pressure sodium lamp
ANSI Designation S67

ISOFOOTCANDLE CURVE - MINIMUM

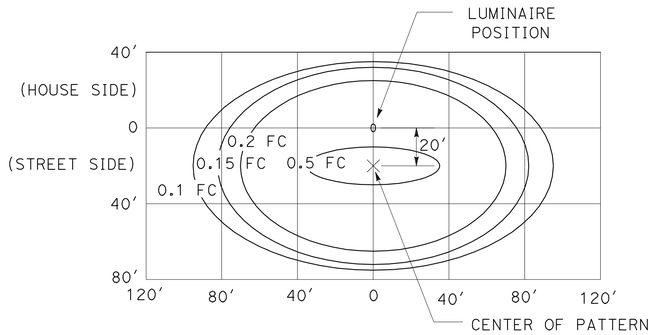

LED LUMINAIRE ROADWAY 1

200-W HPS Equivalent at 34′ Mounting Height

ISOFOOTCANDLE CURVE - MINIMUM

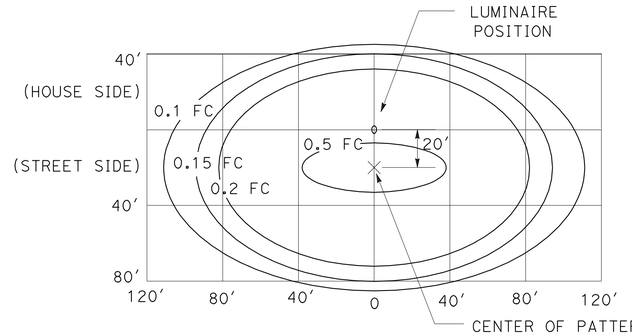

LED LUMINAIRE ROADWAY 2

310-W HPS Equivalent at 40′ Mounting Height

ISOFOOTCANDLE CURVE - MINIMUM

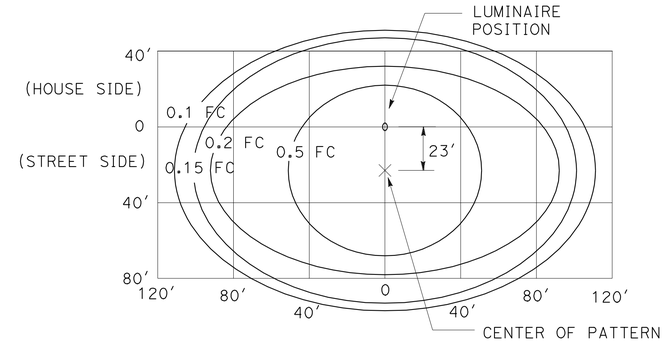

LED LUMINAIRE ROADWAY 4

400-W HPS Equivalent at 40′ Mounting Height

ISOFOOTCANDLE CURVE - MINIMUM

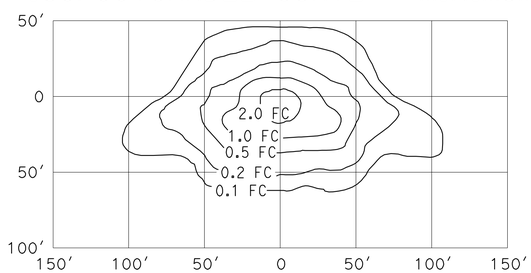

TYPE III MEDIUM CUTOFF

Cutoff Luminaire
30′ Mounting Height
Lamp operated at 16,000 lm
150-W high pressure sodium lamp
ANSI Designation S55

ISOFOOTCANDLE CURVE - MINIMUM

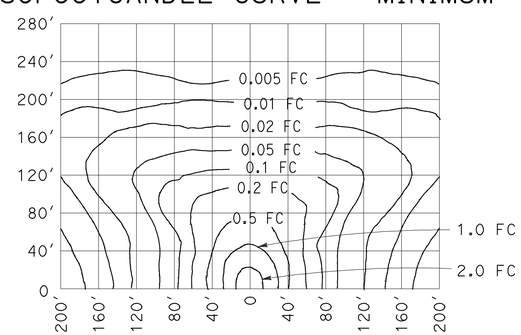

LOW PRESSURE SODIUM LUMINAIRE

40′ Mounting Height
Lamp operated at 33,000 lm
180-W low pressure sodium lamp

STATE OF CALIFORNIA
DEPARTMENT OF TRANSPORTATION

ELECTRICAL SYSTEMS (ISOFOOTCANDLE DIAGRAMS)

NO SCALE

RSP ES-10A DATED JULY 20, 2012 SUPPLEMENTS THE STANDARD PLANS BOOK DATED 2010.

REVISED STANDARD PLAN RSP ES-10A

2010 REVISED STANDARD PLAN RSP ES-10A

2-16-12