Dist	COUNTY	ROUTE	POST MILES TOTAL PROJECT	SHEET No.	TOTAL SHEETS
05	SB	101	22.3/23.0	28	343

REGISTERED CIVIL ENGINEER 12/21/12 DATE

4-29-13
PLANS APPROVAL DATE

REGISTERED PROFESSIONAL ENGINEER JONATHAN D. GLEDHILL No. 66162 Exp. 6/30/14 CIVIL STATE OF CALIFORNIA

THE STATE OF CALIFORNIA OR ITS OFFICERS OR AGENTS SHALL NOT BE RESPONSIBLE FOR THE ACCURACY OR COMPLETENESS OF SCANNED COPIES OF THIS PLAN SHEET.

NOTE:

FOR ACCURATE RIGHT OF WAY DATA, CONTACT RIGHT OF WAY ENGINEERING AT THE DISTRICT OFFICE.

LEGEND:

- RSP
- STRUCTURE EXCAVATION (BRIDGE)
- STRUCTURE EXCAVATION (TYPE D - ROADWAY)
- ROADWAY EXCAVATION

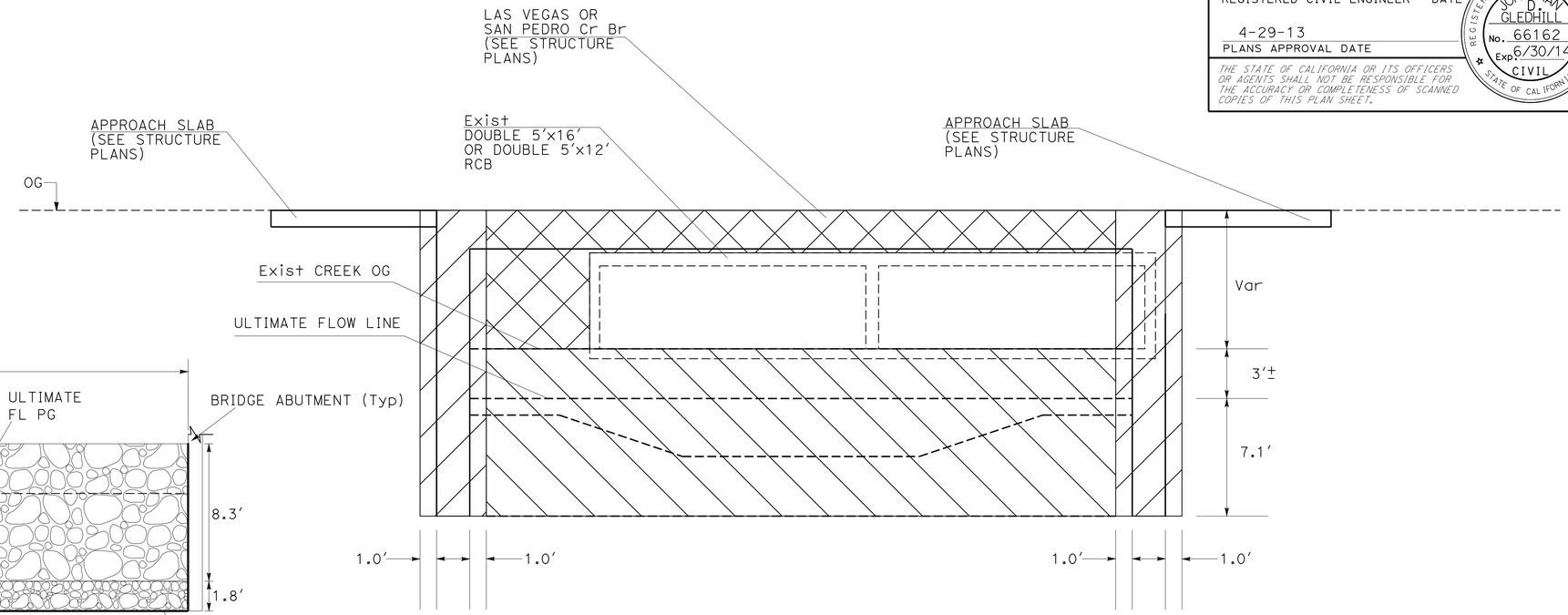

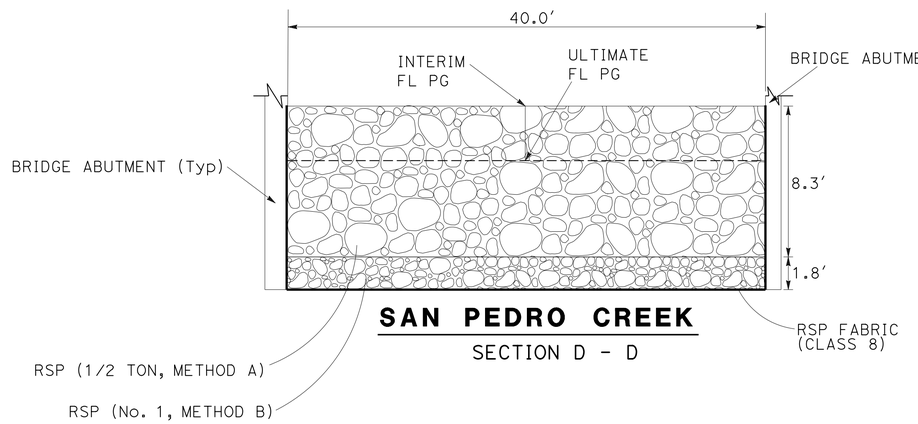

SAN PEDRO CREEK

SECTION D - D

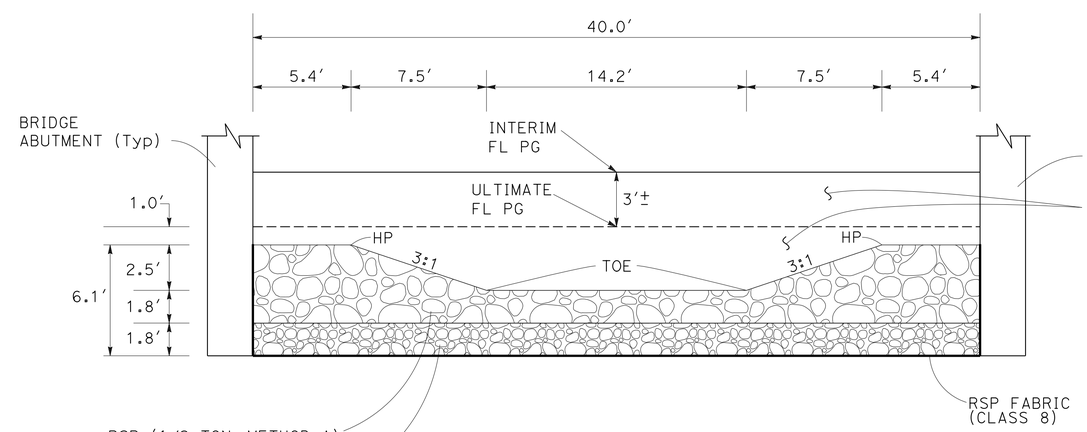

CREEK CHANNEL
ROCK SLOPE PROTECTION DETAIL
TYPICAL SECTION

SECTION C - C

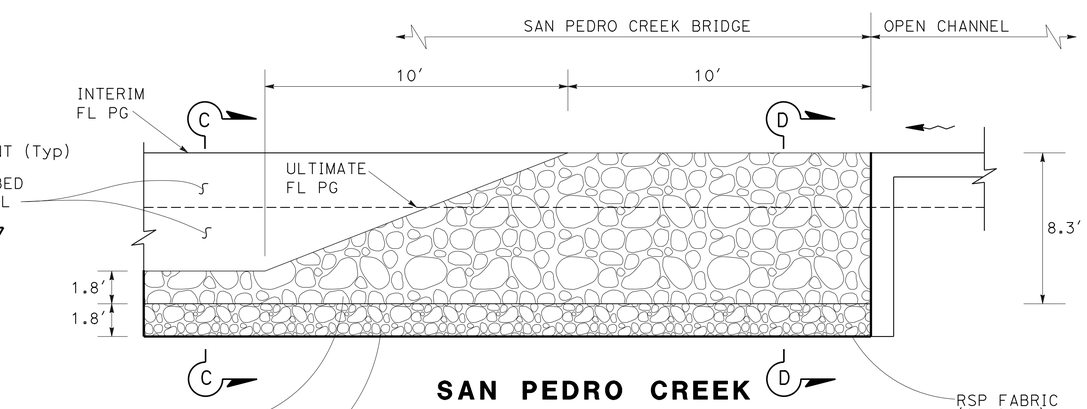

SAN PEDRO CREEK
ROCK SLOPE PROTECTION
TRANSITION DETAIL

2 **REPLACED PER ADDENDUM No. 2 DATED OCTOBER 10, 2013**

CONSTRUCTION DETAILS
NO SCALE

C-1

STATE OF CALIFORNIA - DEPARTMENT OF TRANSPORTATION
06-DESIGN
FUNCTIONAL SUPERVISOR: FOAD N AL-HAMDANI
CALCULATED-DESIGNED BY: JASON CASTILLO
CHECKED BY: JONATHAN D GLEDHILL
REVISED BY
DATE REVISED

LAST REVISION 08-16-12
DATE PLOTTED => 09-OCT-2013
TIME PLOTTED => 15:44

Dist	COUNTY	ROUTE	POST MILES TOTAL PROJECT	SHEET No.	TOTAL SHEETS
05	SB	101	22.3/23.0	29	343

REGISTERED CIVIL ENGINEER DATE 12/21/12

4-29-13
PLANS APPROVAL DATE

REGISTERED PROFESSIONAL ENGINEER JONATHAN D. GLEDHILL No. 66162 Exp 6/30/14 CIVIL STATE OF CALIFORNIA

THE STATE OF CALIFORNIA OR ITS OFFICERS OR AGENTS SHALL NOT BE RESPONSIBLE FOR THE ACCURACY OR COMPLETENESS OF SCANNED COPIES OF THIS PLAN SHEET.

NOTE: FOR SECTION C-C SEE CONSTRUCTION DETAIL SHEET (C-1)
ROCK SLOPE PROTECTION DETAIL TYPICAL SECTION

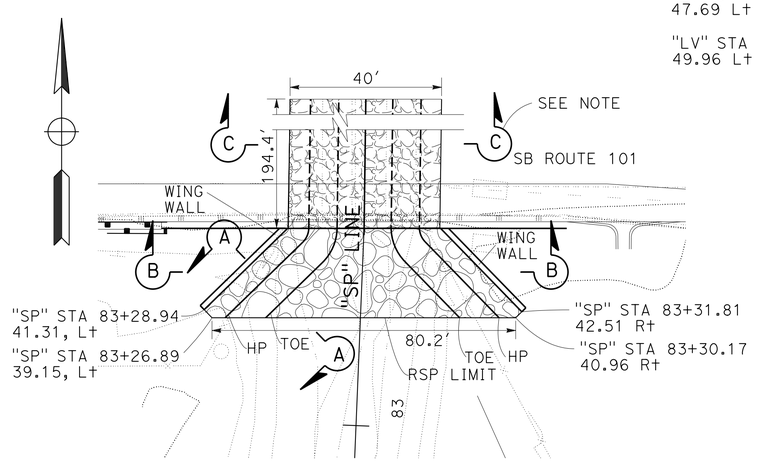

SAN PEDRO CREEK OUTLET

PLAN VIEW
SCALE:1"=20'

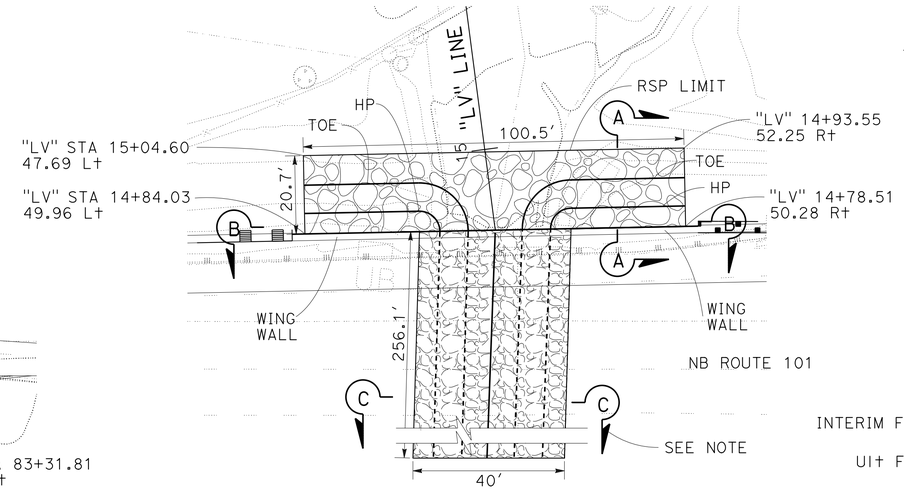

LAS VEGAS CREEK INLET

PLAN VIEW
SCALE:1"=20'

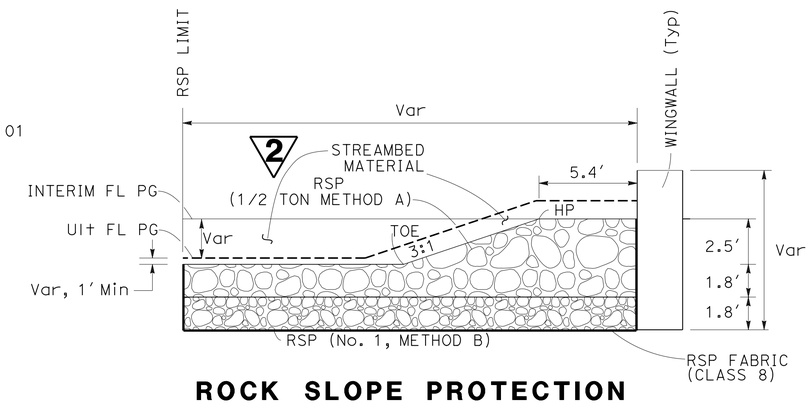

ROCK SLOPE PROTECTION WINGWALL TRANSITION DETAIL

SECTION A-A

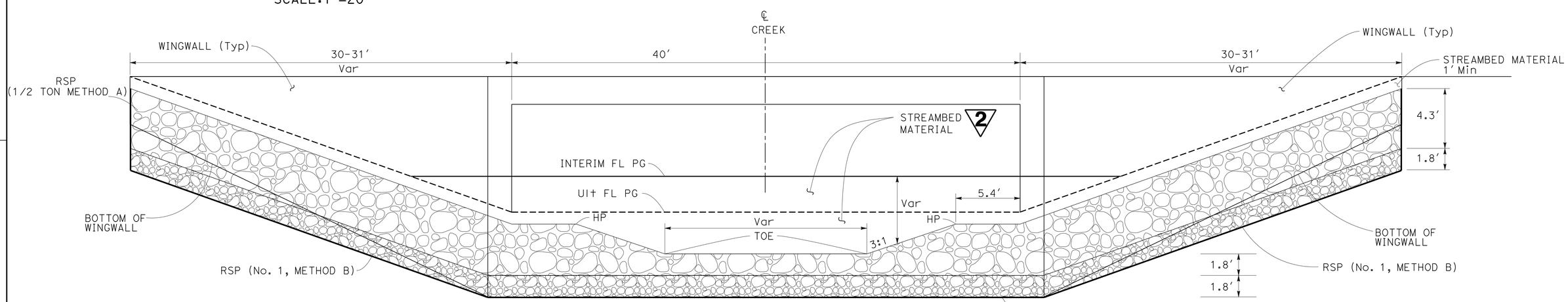

CREEK CHANNEL ROCK SLOPE PROTECTION WINGWALL TRANSITION DETAIL

SECTION B-B

2 REPLACED PER ADDENDUM No. 2 DATED OCTOBER 10, 2013

CONSTRUCTION DETAILS

NO SCALE

C-2

STATE OF CALIFORNIA - DEPARTMENT OF TRANSPORTATION
06-DESIGN
Caltrans
FUNCTIONAL SUPERVISOR: FOAD N AL-HAMDANI
CALCULATED-DESIGNED BY: JASON CASTILLO
CHECKED BY: JONATHAN D GLEDHILL
REVISED BY
DATE REVISED

LAST REVISION 08-16-12
DATE PLOTTED => 09-OCT-2013
TIME PLOTTED => 15:44

DIST	COUNTY	ROUTE	POST MILES TOTAL PROJECT	SHEET No.	TOTAL SHEETS
05	SB	101	22.3/23.0	313	343

REGISTERED CIVIL ENGINEER 1-17-13 DATE

4-29-13
PLANS APPROVAL DATE

REGISTERED PROFESSIONAL ENGINEER M. J. CULLEN No. C 40620 Exp. 03-31-13 CIVIL STATE OF CALIFORNIA

The State of California or its officers or agents shall not be responsible for the accuracy or completeness of electronic copies of this plan sheet.

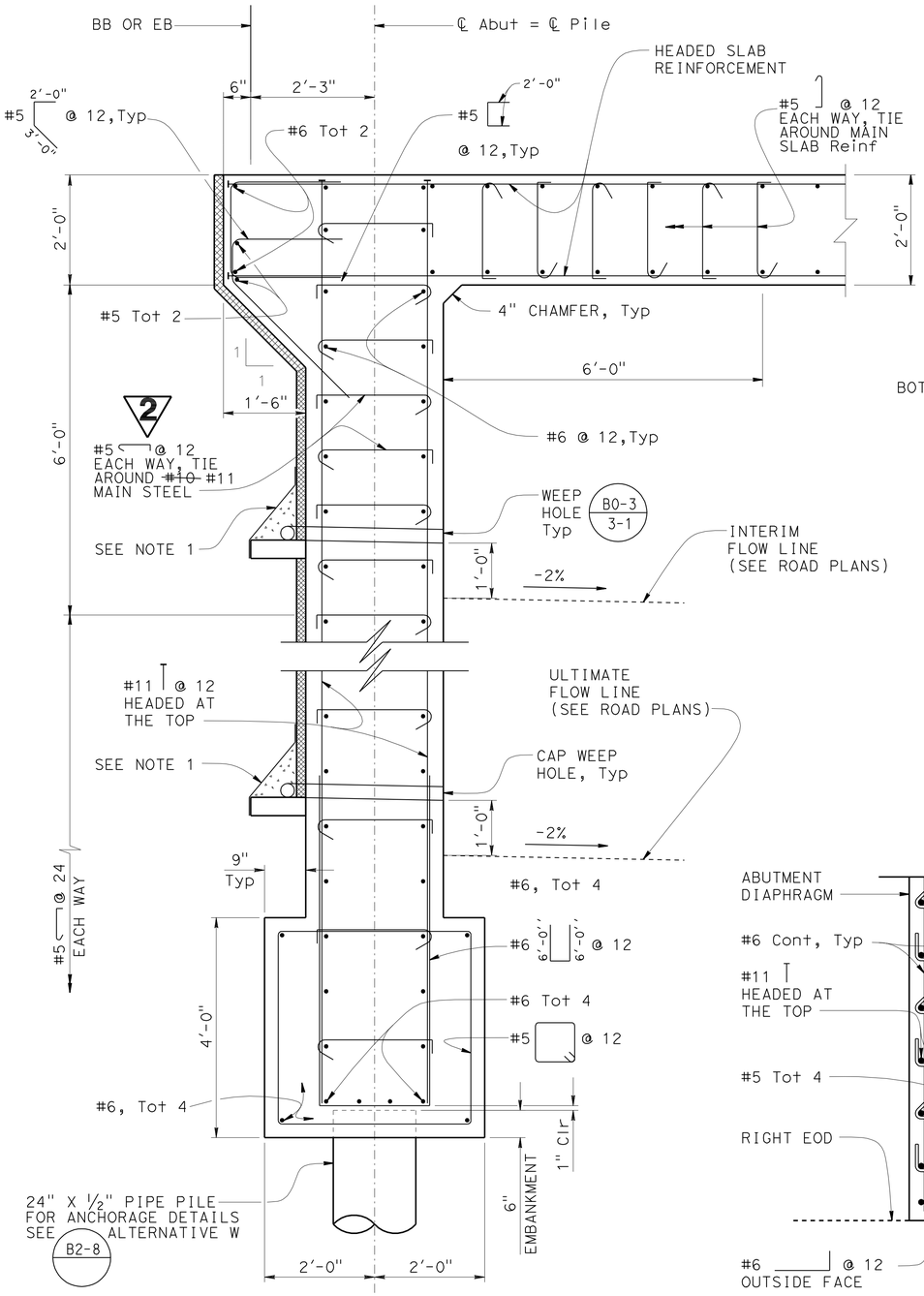

SECTION A-A

3/4" = 1'-0"

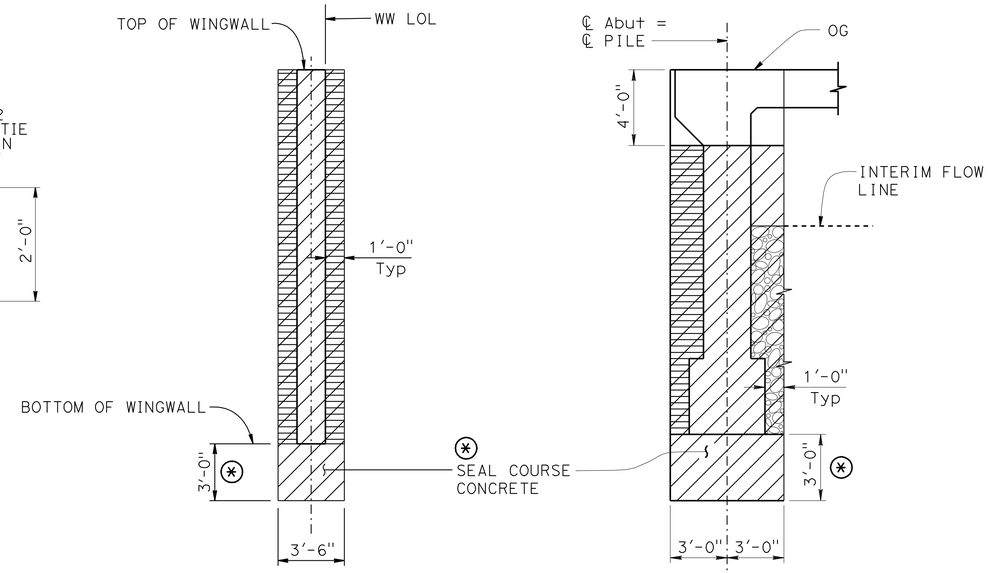

WINGWALL SECTION

ABUTMENTS 1 AND 2

LIMITS OF PAYMENT FOR EXCAVATION AND BACKFILL AT ABUTMENTS

1/4" = 1'-0"

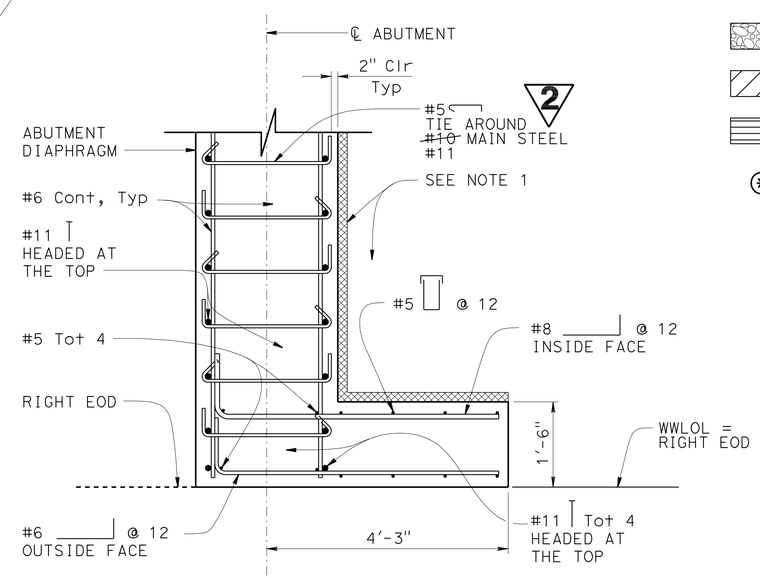

SECTION B-B

3/4" = 1'-0"

LEGEND:

- Rock Slope Protection See Road Plans
- Structure excavation, Type A
- Structure backfill (Bridge)
- (*) Seal course to be placed only when ordered by the Engineer. Estimated quantities involved are based on the seal thickness shown. The thickness to be used will be determined in the field by the Engineer. When seal is not used, the bottom of the reinforced footing shall remain at the elevation shown.

NOTES:

1. Geocomposite Drain, see "STRUCTURE APPROACH DRAINAGE DETAILS" sheet.
2. Joint Seal MR = 1/2"

B0-1 / 1-2 and B6-21

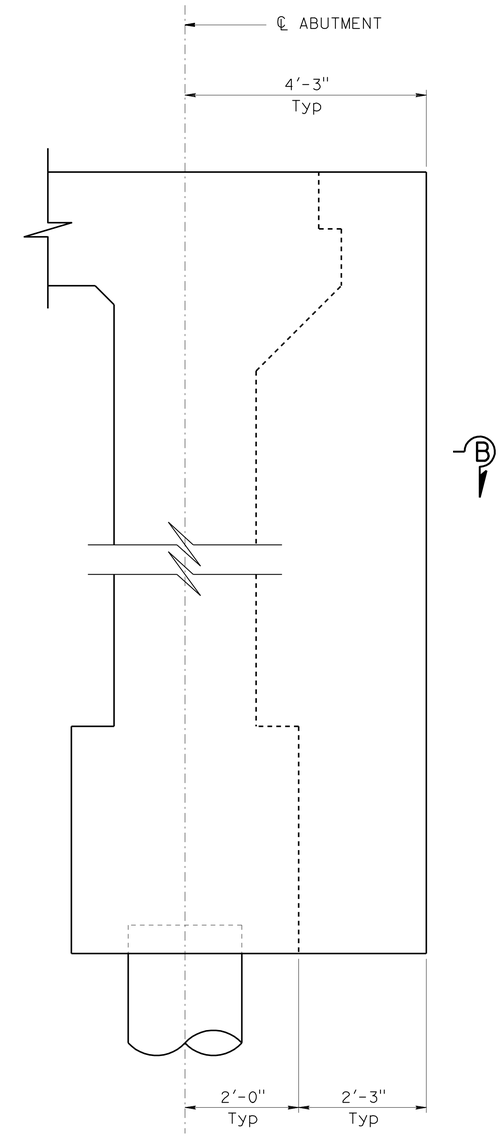

WINGWALL ELEVATION

3/4" = 1'-0"

2 REPLACED PER ADDENDUM No. 2 DATED OCTOBER 10, 2013

	BY	CHECKED
DESIGN	M. CULLEN	H. PEREZ
DETAILS	K. CHONKRIA / S. NG	M. CULLEN
QUANTITIES	R. WASHINGTON	G. REYES-GUTIERREZ

STATE OF CALIFORNIA DEPARTMENT OF TRANSPORTATION

DIVISION OF ENGINEERING SERVICES STRUCTURE DESIGN DESIGN BRANCH 6

BRIDGE NO. 51-0339K POST MILE 22.3-23.0

LAS VEGAS OFF-RAMP BRIDGE (REPLACE)
ABUTMENT DETAILS NO. 1

STRUCTURES DESIGN DETAIL SHEET (ENGLISH) (REV. 09-01-10)

ORIGINAL SCALE IN INCHES FOR REDUCED PLANS 0 1 2 3

UNIT: 3591
PROJECT NUMBER & PHASE: 0500000055 & 1 CONTRACT NO.: 0G0701

DISREGARD PRINTS BEARING EARLIER REVISION DATES

REVISION DATES 08-01-12 5-01-13 10-04-13

SHEET 7 OF 19

FILE => 51-0339k-f-abmt01dt01.dgn

USERNAME => s114640 DATE PLOTTED => 09-OCT-2013 TIME PLOTTED => 15:14