DIST	COUNTY	ROUTE	POST MILES TOTAL PROJECT	SHEET No	TOTAL SHEETS
05	Mon	1	21.3/21.6	53	186

REGISTERED CIVIL ENGINEER 12-15-08 DATE

5-4-09
PLANS APPROVAL DATE

REGISTERED PROFESSIONAL ENGINEER M. Van De Pol No. C35610 Exp. 9-30-09 CIVIL STATE OF CALIFORNIA

The State of California or its officers or agents shall not be responsible for the accuracy or completeness of electronic copies of this plan sheet.

CURVE DATA

No.	R	Δ	T	L
A	1500.00	5°2'14"	65.98	131.87
B	650.00	9°0'20"	51.19	102.16
C	1500.00	5°2'14"	65.98	131.87
D	500.00	22°29'30"	99.42	196.28
E	200.00	65°8'54"	127.78	227.41

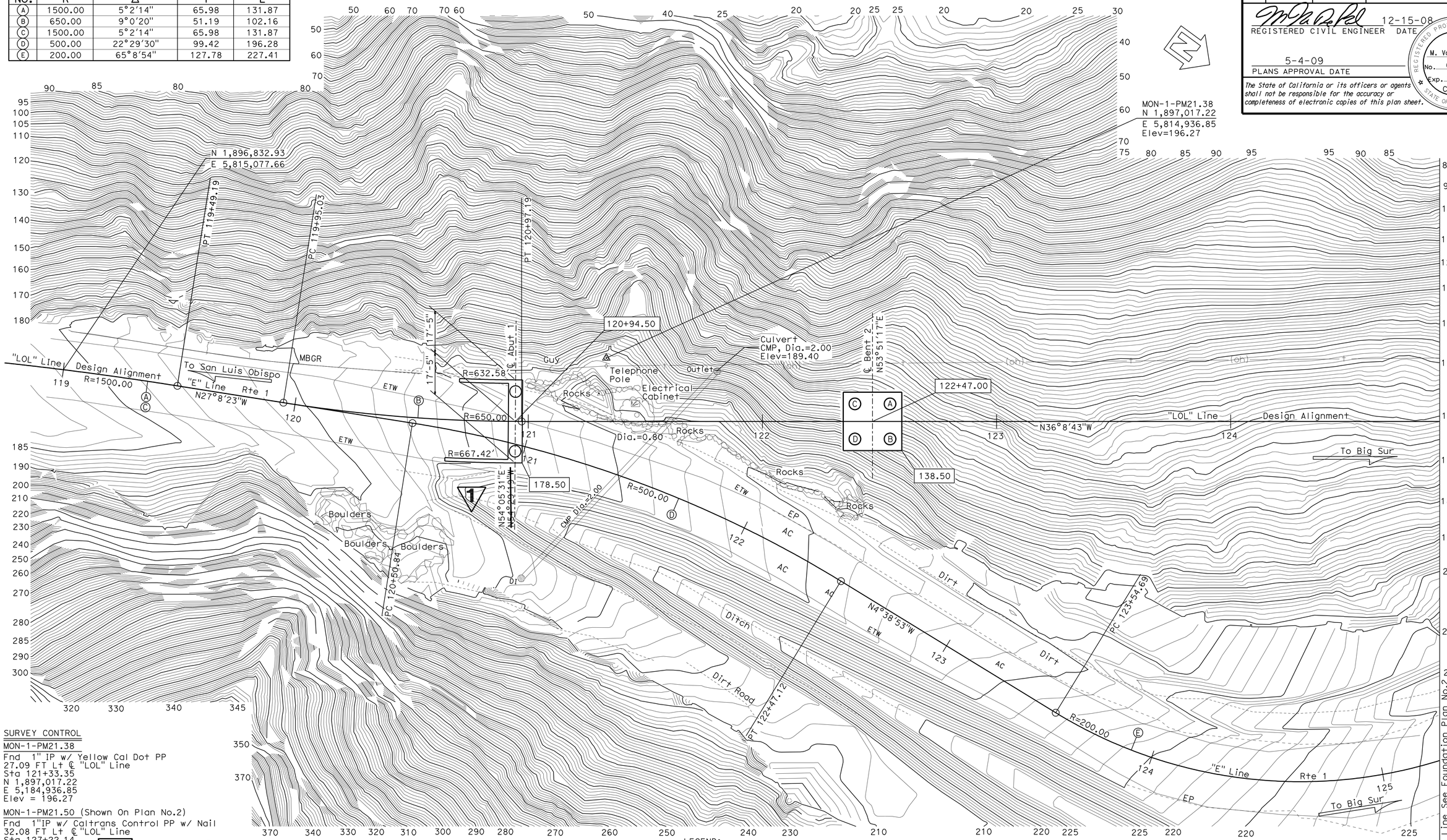

SURVEY CONTROL

MON-1-PM21.38
Fnd 1" IP w/ Yellow Cal Dot PP
27.09 FT Lt ℄ "LOL" Line
Sta 121+33.35
N 1,897,017.22
E 5,184,936.85
Elev = 196.27

MON-1-PM21.50 (Shown On Plan No.2)
Fnd 1"IP w/ Caltrans Control PP w/ Nail
32.08 FT Lt ℄ "LOL" Line
Sta 127+22.14
N 1,897,489.74
E 5,814,585.54
Elev = 230.29

1 **REVISED PER ADDENDUM No. 1 DATED AUGUST 28, 2009**

LEGEND:

Denotes bottom of footing elevation

○ Denotes 5'-0" Ø CIDH Pile, for designation, see "Bent Details No. 2" sheet.

PRELIMINARY INVESTIGATION SECTION					
SCALE 1"=20'	VERT.DATUM NAVD88	PHOTOGRAMMETRY AS OF: X			
	HORZ.DATUM NAD83 (1991.35)	SURVEYED	BY District	CHECKED	BY T.Gillett 05/2008
	ALIGNMENT TIES Dist.Traverse Sheet	DRAFTED	BY T.Zolnikova 05/2008	CHECKED	BY J.Pallares 05/2008

	BY	CHECKED
DESIGN	P. Norboe	M. Van De Pol
DETAILS	D. Elliott	M. Van De Pol
QUANTITIES	P. Norboe	D. Small

STATE OF CALIFORNIA
DEPARTMENT OF TRANSPORTATION

DIVISION OF ENGINEERING SERVICES
STRUCTURE DESIGN
DESIGN BRANCH 9

BRIDGE NO. 44-0290
POST MILE 21.50

PITKINS CURVE BRIDGE
FOUNDATION PLAN NO. 1

STRUCTURES FOUNDATION PLAN SHEET (ENGLISH) (REV. 10/25/05)

ORIGINAL SCALE IN INCHES FOR REDUCED PLANS 0 1 2 3

CU 05
EA 0E9601

DISREGARD PRINTS BEARING EARLIER REVISION DATES

REVISION DATES: 05/28/08 7-2-08 10-14-08 10-17-08 12-8-08

SHEET 4 OF 58

FILE => 44-0290-e-fp01.add

USERNAME => trmikesi DATE PLOTTED => 28-AUG-2009 TIME PLOTTED => 10:29

DIST	COUNTY	ROUTE	POST MILES TOTAL PROJECT	SHEET No	TOTAL SHEETS
05	Mon	1	21.3/21.6	109	186

REGISTERED CIVIL ENGINEER — DATE 12-15-08

5-4-09
PLANS APPROVAL DATE

REGISTERED PROFESSIONAL ENGINEER — M. Van De Pol — No. C35610 — Exp. 09-30-09 — CIVIL — STATE OF CALIFORNIA

The State of California or its officers or agents shall not be responsible for the accuracy or completeness of electronic copies of this plan sheet.

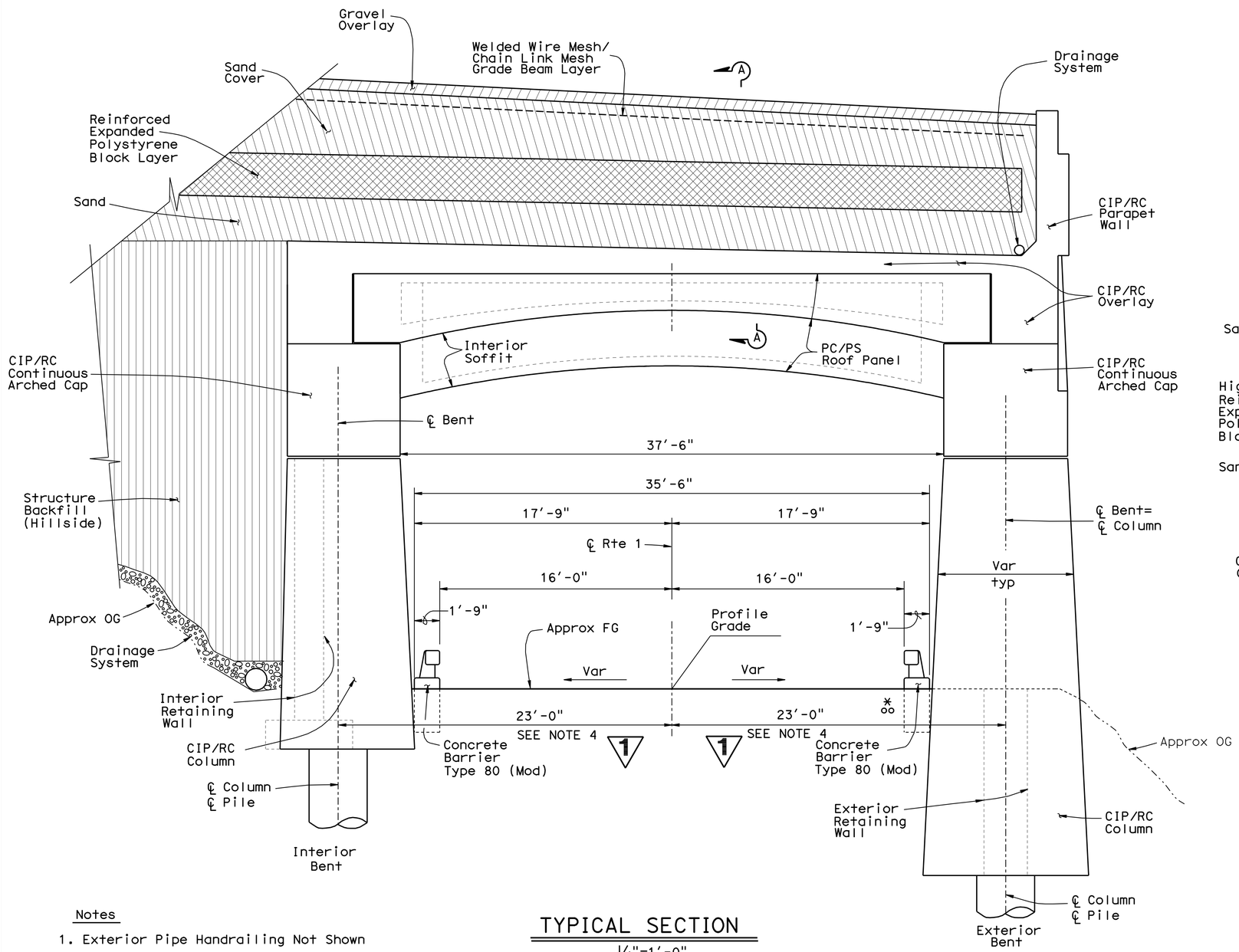

TYPICAL SECTION

1/4"=1'-0"

Section Looking Down Station
Section Taken Beyond Limits of Rain Rocks Viaduct
Section Taken at Columns

* 3½" Dia Conduits see "Road Plans"

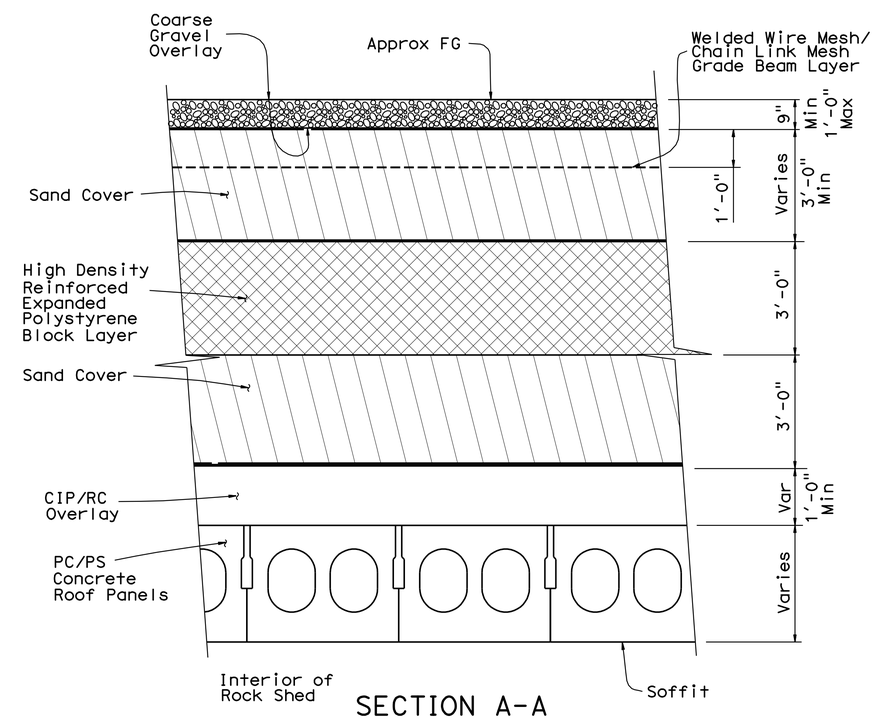

SECTION A-A

½"=1'-0"

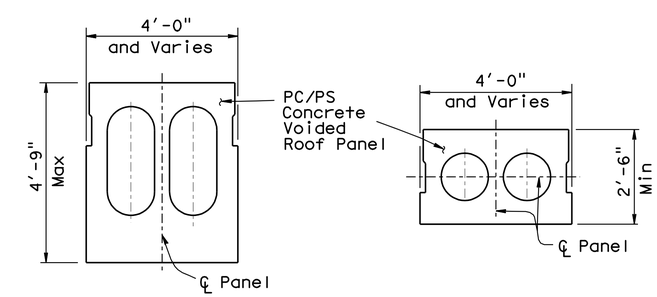

ROOF PANELS

½"=1'-0"

Notes

1. Exterior Pipe Handrailing Not Shown
2. Architectural Treatment Not Shown. See "Architectural Treatment Details" Sheets
3. Pile Casings not Shown
4. Measure from CL Route 1, or CL Rock Shed, From CL Route 1- BRS to Sta 119+49.19, From CL Rock Shed - Sta 119+49.19 to ERS for Details, see "Foundation Plan", "Typical Section No.1",Typical Section No.2" and "Roof Panel Layout" sheets.

1 **REVISED PER ADDENDUM No. 1 DATED AUGUST 28, 2009**

X DESIGN ENGINEER	DESIGN	BY M. Van De Pol	CHECKED P. Norboe	LOAD & RESISTANCE FACTOR DESIGN	LIVE LOADING: Bulldozer and Rock Impact
	DETAILS	BY M. Van De Pol	CHECKED P. Norboe	LAYOUT: BY M. Van De Pol	CHECKED P. Norboe
	QUANTITIES	BY M. Van De Pol	CHECKED R.C. T.O. K.M. G.D.	SPECIFICATIONS: BY M. Kopsa	PLANS AND SPECS COMPARED M. Van De Pol

STATE OF CALIFORNIA
DEPARTMENT OF TRANSPORTATION

DIVISION OF ENGINEERING SERVICES
STRUCTURE DESIGN
DESIGN BRANCH 9

BRIDGE NO. 44-0289
POST MILE 21.30

RAIN ROCKS ROCK SHED
GENERAL PLAN No. 2

STRUCTURES DESIGN GENERAL PLAN SHEET (ENGLISH) (REV. 10/25/05)

ORIGINAL SCALE IN INCHES FOR REDUCED PLANS 0 1 2 3

CU 05
EA 0E9601

DISREGARD PRINTS BEARING EARLIER REVISION DATES — 01/04/07 04/13/07

REVISION DATES

SHEET 2 OF 79

FILE => rs-05-0e9601-02-gp2.add

STRUCTURES DESIGN GENERAL PLAN SHEET (ENGLISH) (REV.07-24-06)

USERNAME => trmikest DATE PLOTTED => 28-AUG-2009 TIME PLOTTED => 10:29

DIST	COUNTY	ROUTE	POST MILES TOTAL PROJECT	SHEET No	TOTAL SHEETS
05	Mon	1	21.3/21.6	113	186

REGISTERED CIVIL ENGINEER 12-15-08 DATE

5-4-09
PLANS APPROVAL DATE

REGISTERED PROFESSIONAL ENGINEER M. Van De Pol No. C35610 Exp. 09-30-09 CIVIL STATE OF CALIFORNIA

The State of California or its officers or agents shall not be responsible for the accuracy or completeness of electronic copies of this plan sheet.

CURVE DATA

No.	R	Δ	T	L
A	500.00	41°54'40"	191.49	365.74
B	1500.00	5°2'14"	65.98	131.87
C	650.00	9°0'20"	51.19	102.16
D	500.00	41°54'40"	191.49	365.74
E	1500.00	5°2'14"	65.98	131.87
F	500.00	22°29'30"	99.42	196.28

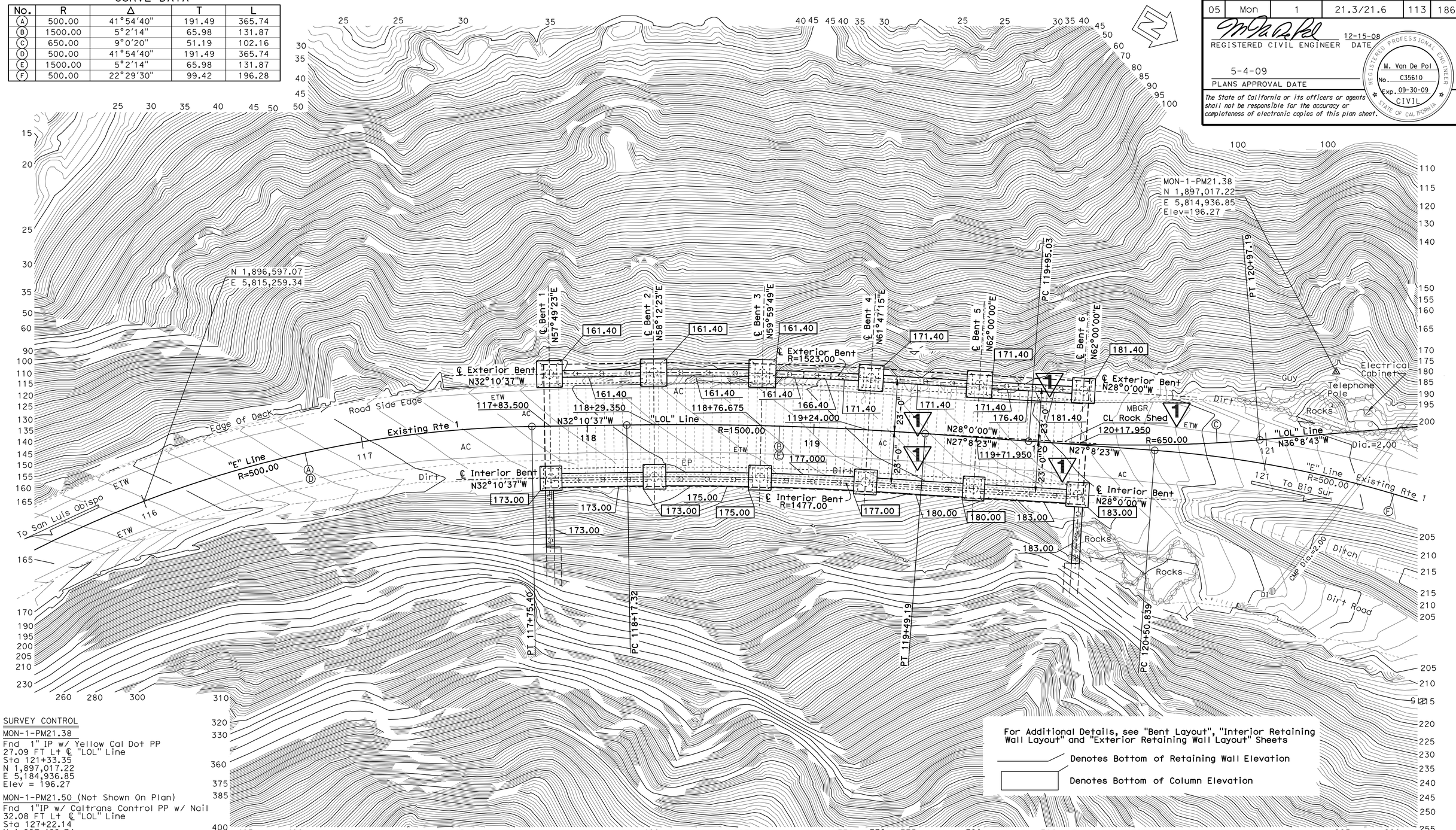

SURVEY CONTROL

MON-1-PM21.38
Fnd 1" IP w/ Yellow Cal Dot PP
27.09 FT Lt ℄ "LOL" Line
Sta 121+33.35
N 1,897,017.22
E 5,184,936.85
Elev = 196.27

MON-1-PM21.50 (Not Shown On Plan)
Fnd 1"IP w/ Caltrans Control PP w/ Nail
32.08 FT Lt ℄ "LOL" Line
Sta 127+22.14
N 1,897,489.74
E 5,814,585.54
Elev = 230.29

1 **REVISED PER ADDENDUM No. 1 DATED AUGUST 28, 2009**

PRELIMINARY INVESTIGATION SECTION

SCALE 1"=20'	VERT.DATUM NAVD88	PHOTOGRAMMETRY AS OF: X			
	HORZ.DATUM NAD83 (1991.35)	SURVEYED BY District	CHECKED BY T.Gillett 05/2008		
ALIGNMENT TIES Dist.Traverse Sheet		DRAFTED BY T.Zolnikova 05/2008	CHECKED BY J.Pallares 05/2008		

DESIGN	BY M. Van De Pol	CHECKED P. Norboe
DETAILS	BY M. Van De Pol	CHECKED P. Norboe
QUANTITIES	BY M. Van De Pol	CHECKED R.C. T.O. K.M. G.D.

STATE OF CALIFORNIA
DEPARTMENT OF TRANSPORTATION

DIVISION OF ENGINEERING SERVICES
STRUCTURE DESIGN
DESIGN BRANCH 09

BRIDGE NO. 44-0289
POST MILE 21.30

RAIN ROCKS ROCK SHED
FOUNDATION PLAN

STRUCTURES FOUNDATION PLAN SHEET (ENGLISH) (REV. 10/25/05)

ORIGINAL SCALE IN INCHES FOR REDUCED PLANS 0 1 2 3

CU 05
EA 0E9601

DISREGARD PRINTS BEARING EARLIER REVISION DATES → 05/28/08

REVISION DATES

SHEET 6 OF 79

FILE => rs-05-0e9601-06-fp101.add

USERNAME => tmikes1 DATE PLOTTED => 28-AUG-2009 TIME PLOTTED => 10:29

DIST	COUNTY	ROUTE	POST MILES TOTAL PROJECT	SHEET No	TOTAL SHEETS
05	Mon	1	21.3/21.6	136	186

REGISTERED CIVIL ENGINEER 12-15-08 DATE

5-4-09
PLANS APPROVAL DATE

REGISTERED PROFESSIONAL ENGINEER M.Van De Pol No. C35610 Exp. 09-30-09 CIVIL STATE OF CALIFORNIA

The State of California or its officers or agents shall not be responsible for the accuracy or completeness of electronic copies of this plan sheet.

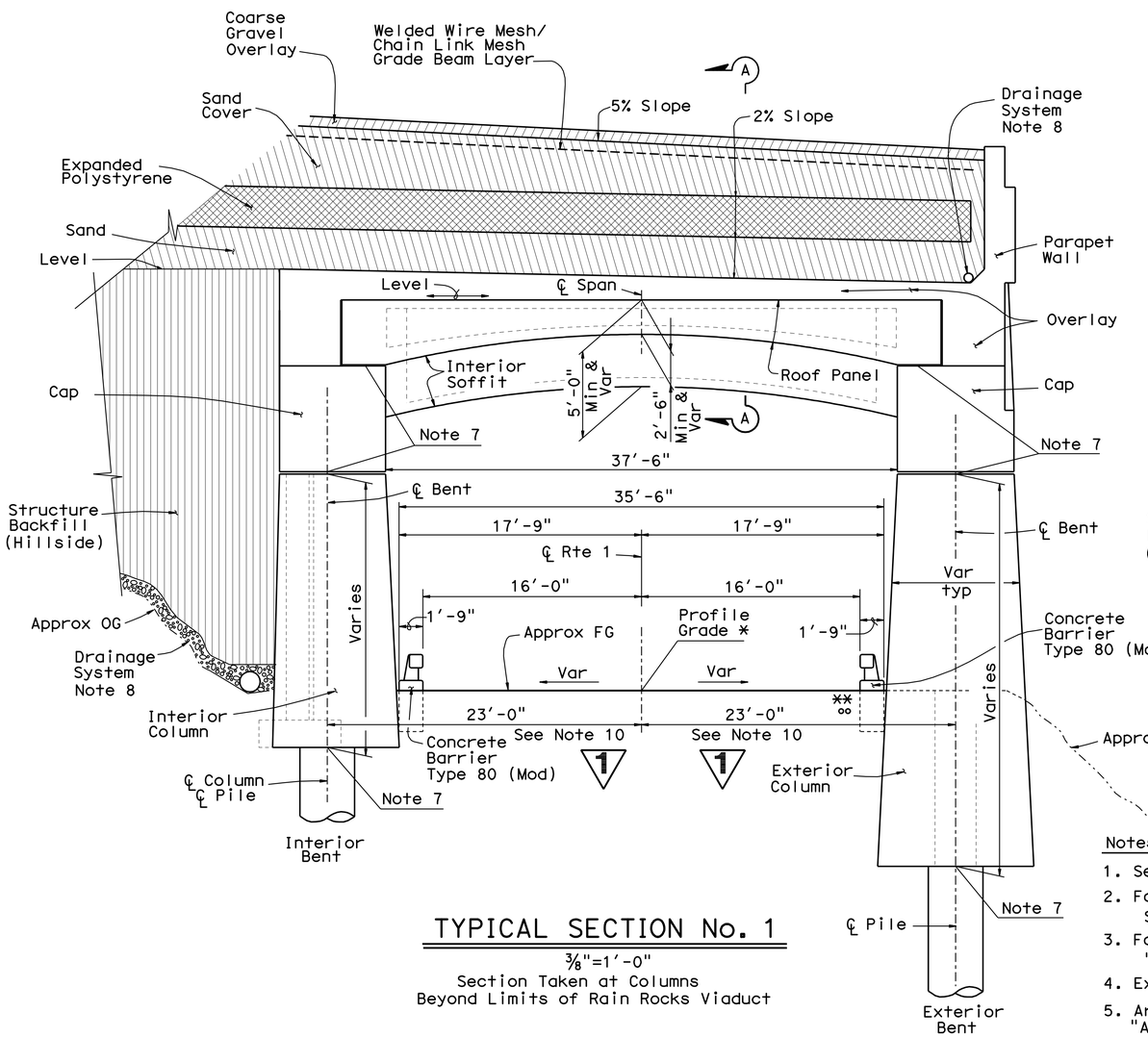

TYPICAL SECTION No. 1

3/8"=1'-0"
Section Taken at Columns
Beyond Limits of Rain Rocks Viaduct

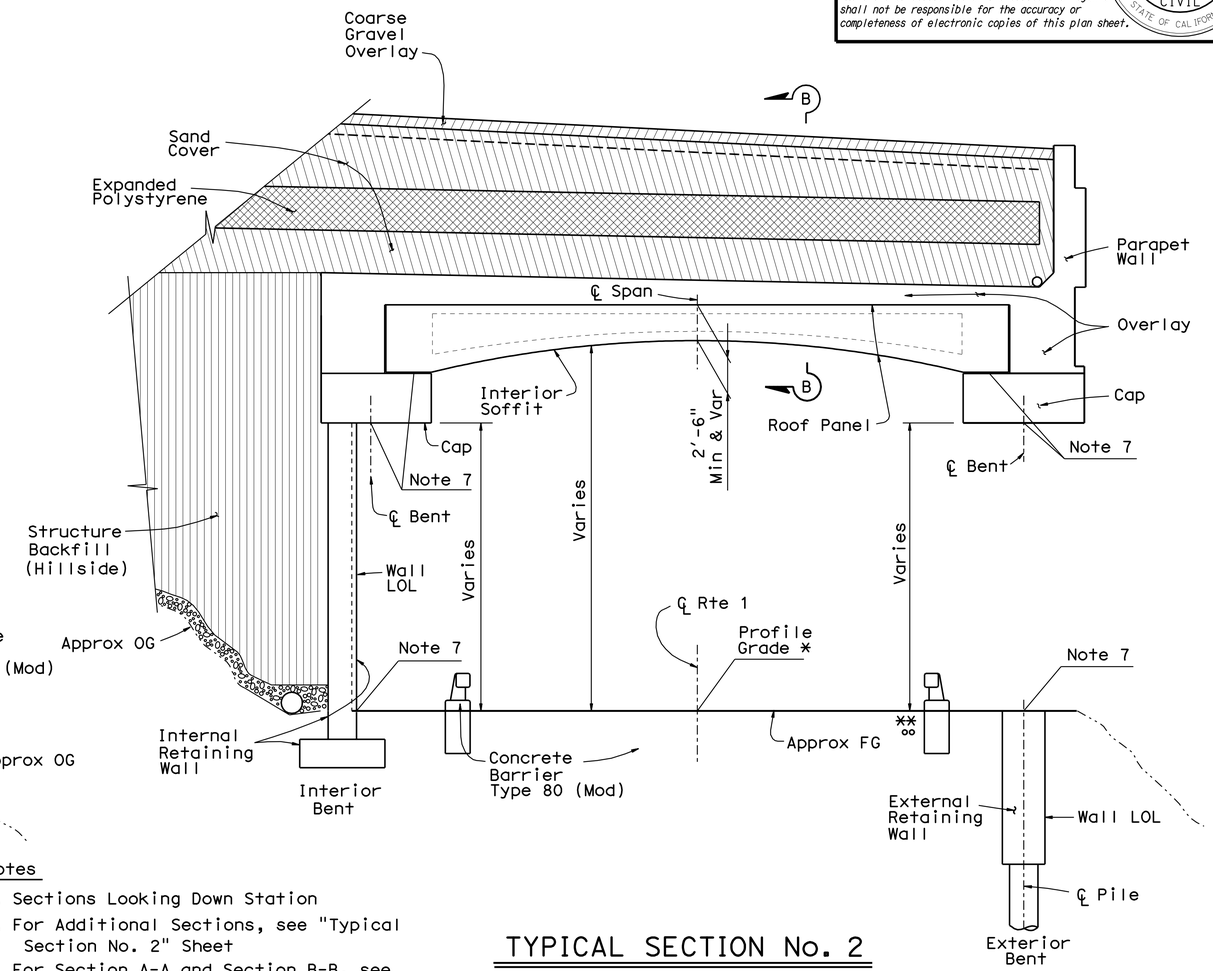

TYPICAL SECTION No. 2

3/8"=1'-0"
Section Taken Between Columns
Beyond Limits of Rain Rocks Viaduct
For Details Not Shown, see
"Typical Section No. 1"

Notes

1. Sections Looking Down Station
2. For Additional Sections, see "Typical Section No. 2" Sheet
3. For Section A-A and Section B-B, see "Typical Section No. 3" Sheet
4. Exterior Pipe Handrailing Not Shown
5. Architectural Treatment Not Shown. See "Architectural Treatment Details" Sheets
6. For Column Elevations see "Column Details No. 1" Sheet. Pile Casings not Shown
7. For Retaining Wall and Column Elevations, see "Exterior Retaining Wall Layout", "Interior Retaining Wall Layout" and "Bent Layout" Sheets
8. For Drainage Details, see "Structure Drainage Details" Sheet
9. For Roof Cover Details, see "Interior Retaining Wall Backfill and Roof Cover Details" Sheets

10. Measure from CL Route 1, or CL Rock Shed, From CL Route 1- BRS to Sta 119+49.19, From CL Rock Shed - Sta 119+49.19 to ERS for Details, see "Foundation Plan", "Typical Section No.2" and "Roof Panel Layout" sheets.

For Minimum Vertical Clearance, see "Headwall Layout" Sheet

* Roadway Profile Grade (Exist and New), see "Road Plans"

** 2 ~ 3½" Dia Conduits
See "Concrete Barrier Type 80 (Mod) Details No. 3" Sheet and "Road Plans"

1 REVISED PER ADDENDUM No. 1 DATED AUGUST 28, 2009

DESIGN	BY M. Van De Pol	CHECKED P. Norboe	
DETAILS	BY M. Van De Pol	CHECKED P. Norboe	
QUANTITIES	BY M. Van De Pol	CHECKED R.C. T.O. K.M. G.D.	

STATE OF CALIFORNIA
DEPARTMENT OF TRANSPORTATION

DIVISION OF ENGINEERING SERVICES
STRUCTURE DESIGN
DESIGN BRANCH 9

BRIDGE NO. 44-0289
POST MILE 21.30

RAIN ROCKS ROCK SHED
TYPICAL SECTION No. 1

STRUCTURES DESIGN DETAIL SHEET (ENGLISH) (REV. 10/25/05)

ORIGINAL SCALE IN INCHES FOR REDUCED PLANS 0 1 2 3

CU 05
EA 0E9601

DISREGARD PRINTS BEARING EARLIER REVISION DATES

REVISION DATES 01/01/07

SHEET 29 OF 79

FILE => rs-05-0e9601-29-typsec1.add

USERNAME => trmikesl DATE PLOTTED => 28-AUG-2009 TIME PLOTTED => 10:30

DIST	COUNTY	ROUTE	POST MILES TOTAL PROJECT	SHEET No	TOTAL SHEETS
05	Mon	1	21.3/21.6	137	186

REGISTERED CIVIL ENGINEER 12-15-08 DATE

5-4-09
PLANS APPROVAL DATE

REGISTERED PROFESSIONAL ENGINEER M.Van De Pol No. C35610 Exp. 09-30-09 CIVIL STATE OF CALIFORNIA

The State of California or its officers or agents shall not be responsible for the accuracy or completeness of electronic copies of this plan sheet.

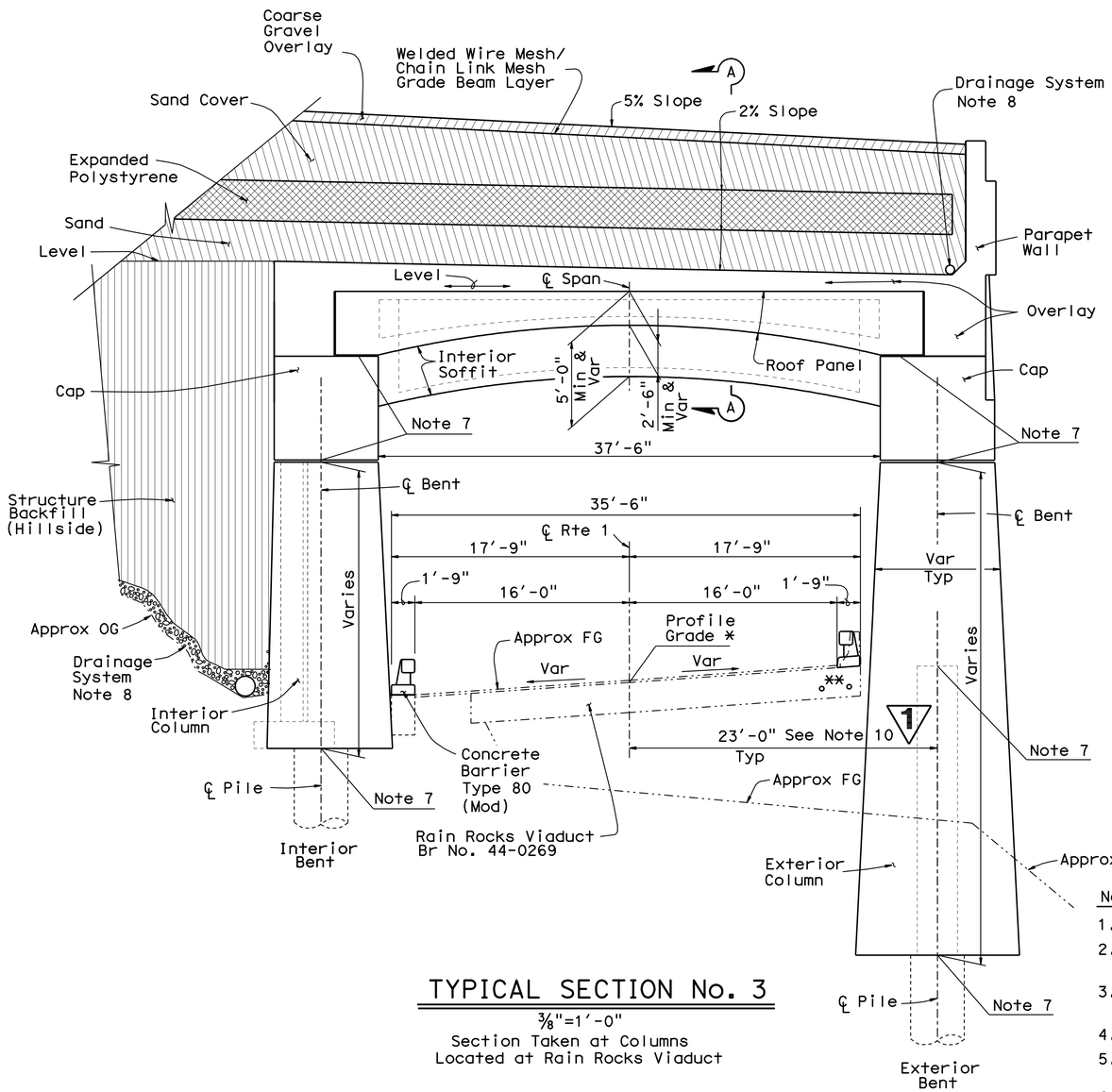

TYPICAL SECTION No. 3

3/8"=1'-0"
Section Taken at Columns
Located at Rain Rocks Viaduct

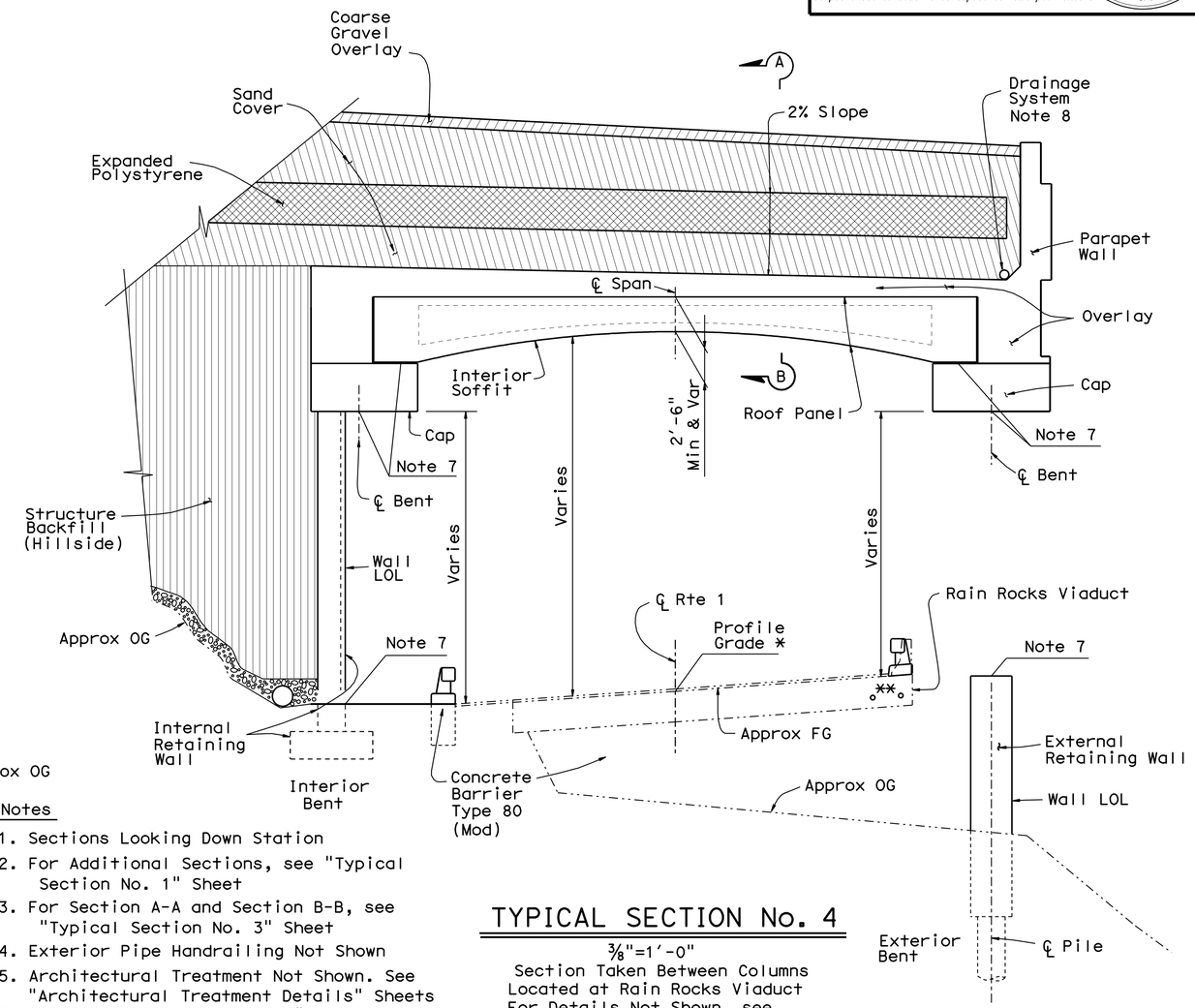

TYPICAL SECTION No. 4

3/8"=1'-0"
Section Taken Between Columns
Located at Rain Rocks Viaduct
For Details Not Shown, see
"Typical Section No. 3"

Notes

1. Sections Looking Down Station
2. For Additional Sections, see "Typical Section No. 1" Sheet
3. For Section A-A and Section B-B, see "Typical Section No. 3" Sheet
4. Exterior Pipe Handrailing Not Shown
5. Architectural Treatment Not Shown. See "Architectural Treatment Details" Sheets
6. For Column Elevations see "Column Details No. 1" Sheet. Pile Casings not Shown
7. For Retaining Wall and Column Elevations, see "Exterior Retaining Wall Layout", "Interior Retaining Wall Layout" and "Bent Layout" Sheets
8. For Drainage Details, see "Structure Drainage Details" Sheet
9. For Roof Cover Details, see Interior Retaining Wall Backfill and Roof Cover Details" Sheets
10. Measure from CL Route 1, or CL Rock Shed, From CL Route 1- BRS to Sta 119+49.19, From CL Rock Shed - Sta 119+49.19 to ERS for Details, see "Foundation Plan", "Typical Section No.1" and "Roof Panel Layout" sheets.

For Minimum Vertical Clearance, see "Headwall Layout" Sheet

* Roadway Profile Grade (Exist and New), see "Road Plans"

** 2 ~ 4" Dia Conduits (Exist)
See "Concrete Barrier Type 80 (Mod) Details No. 3" Sheet and "Road Plans"

1 **REVISED PER ADDENDUM No. 1 DATED AUGUST 28, 2009**

DESIGN	BY M. Van De Pol	CHECKED P. Norboe	
DETAILS	BY M. Van De Pol	CHECKED P. Norboe	
QUANTITIES	BY M. Van De Pol	CHECKED R.C. T.O. K.M. G.D.	

STATE OF CALIFORNIA
DEPARTMENT OF TRANSPORTATION

DIVISION OF ENGINEERING SERVICES
STRUCTURE DESIGN
DESIGN BRANCH 9

BRIDGE NO. 44-0289
POST MILE 21.30

RAIN ROCKS ROCK SHED
TYPICAL SECTION No. 2

STRUCTURES DESIGN DETAIL SHEET (ENGLISH) (REV. 10/25/05)

ORIGINAL SCALE IN INCHES FOR REDUCED PLANS 0 1 2 3

CU 05
EA 0E9601

DISREGARD PRINTS BEARING EARLIER REVISION DATES 01/01/07

REVISION DATES

SHEET 30 OF 79

FILE => rs-05-0e9601-30-typsec2.add

USERNAME => trmikes1 DATE PLOTTED => 28-AUG-2009 TIME PLOTTED => 10:30

DIST	COUNTY	ROUTE	POST MILES TOTAL PROJECT	SHEET No	TOTAL SHEETS
05	Mon	1	21.3/21.6	143	186

REGISTERED CIVIL ENGINEER 12-15-08 DATE

5-4-09
PLANS APPROVAL DATE

REGISTERED PROFESSIONAL ENGINEER M.Van De Pol No. C35610 Exp. 09-30-09 CIVIL STATE OF CALIFORNIA

The State of California or its officers or agents shall not be responsible for the accuracy or completeness of electronic copies of this plan sheet.

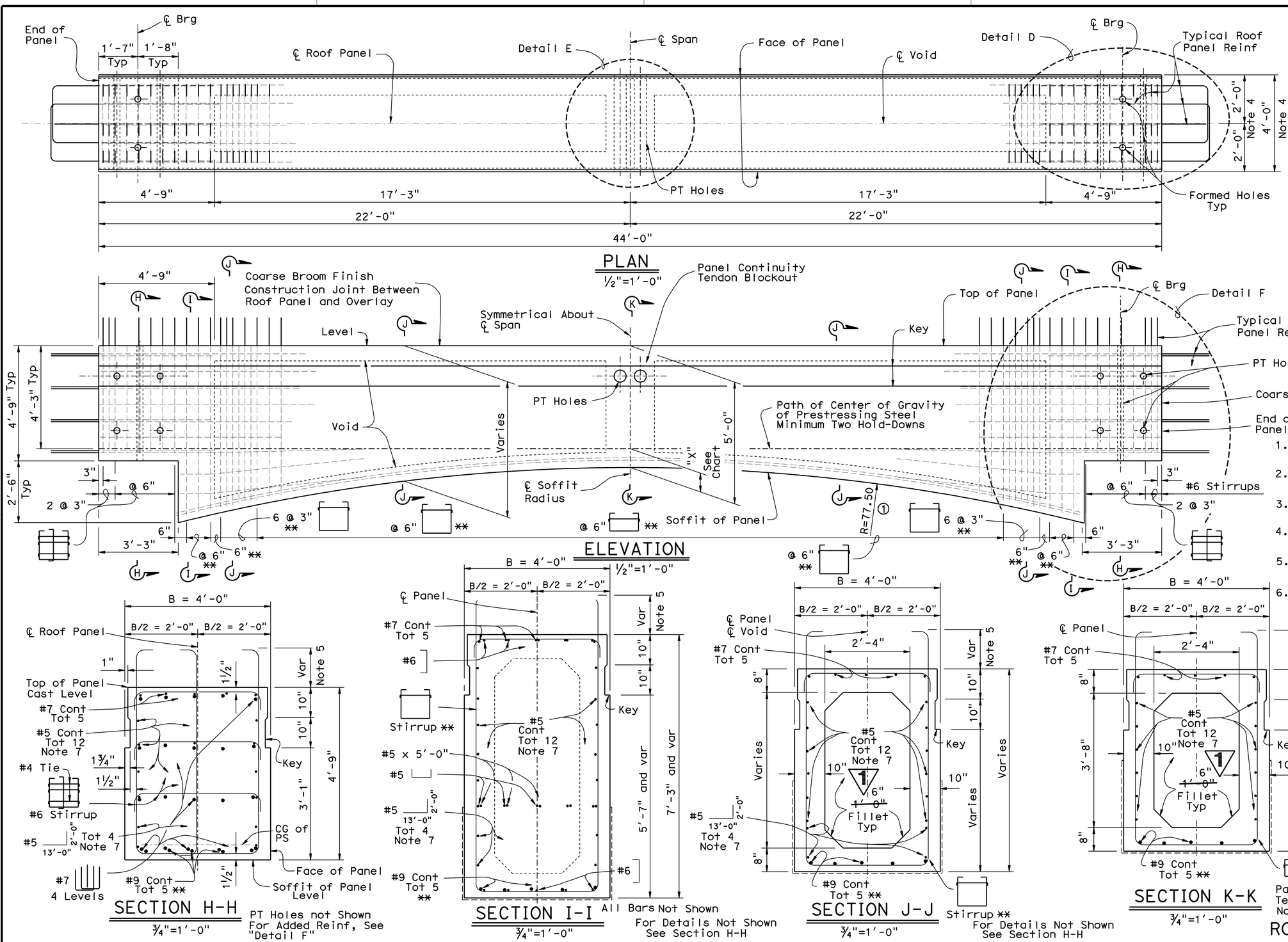

ROOF PANEL AT COLUMNS

Soffit Curve Data

Curve ①

R = 77.50
Δ = 27°54'58"
T = 19.263
L = 37.760

Notes

1. For Detail D, Detail E, and Detail F, see "Roof Panel Details No. 5" Sheet
2. For Prestressing Notes, see "Roof Panel Details No. 3" Sheet
3. For Roof Panel Soffit Treatment, see "Architectural Treatment Details" Sheet
4. For Panel Layout, see "Roof Panel Layout" Sheet
5. Stirrup Tails Extend to 3" Clear From Top of Overlay
6. For Alternative Stirrup Pattern Details See "Roof Panel Details No. 3" Sheet
7. For Roof Panel Horizontal Stem Reinf Layout, see "Roof Panel No. 3" Sheet

** Denotes Reinforcement to be Epoxy Coated

---- Denotes Limits of Architectural Treatment, see "Architectural Treatment Details No. 7" Sheet

1 **REVISED PER ADDENDUM No. 1 DATED AUGUST 28, 2009**

	BY	CHECKED
DESIGN	M. Van De Pol	P. Norboe
DETAILS	M. Van De Pol	P. Norboe
QUANTITIES	M. Van De Pol	R.C. T.O. K.M. G.D.

STATE OF CALIFORNIA
DEPARTMENT OF TRANSPORTATION

DIVISION OF ENGINEERING SERVICES
STRUCTURE DESIGN
DESIGN BRANCH 9

BRIDGE NO. 44-0289
POST MILE 21.30

RAIN ROCKS ROCK SHED
ROOF PANEL DETAILS NO. 4

STRUCTURES DESIGN DETAIL SHEET (ENGLISH) (REV. 10/25/05)

ORIGINAL SCALE IN INCHES FOR REDUCED PLANS 0 1 2 3

CU 05
EA 0E9601

DISREGARD PRINTS BEARING EARLIER REVISION DATES 01/01/07

REVISION DATES

SHEET 36 OF 79

FILE => rs-05-0e9601-36-rfpnldets4.dgn

USERNAME => rtmikest DATE PLOTTED => 28-AUG-2009 TIME PLOTTED => 10:30

DIST	COUNTY	ROUTE	POST MILES TOTAL PROJECT	SHEET No	TOTAL SHEETS
05	Mon	1	21.3/21.6	166	186

REGISTERED CIVIL ENGINEER — DATE 12-15-08

5-4-09
PLANS APPROVAL DATE

REGISTERED PROFESSIONAL ENGINEER — M.Van De Pol — No. C35610 — Exp. 09-30-09 — CIVIL — STATE OF CALIFORNIA

The State of California or its officers or agents shall not be responsible for the accuracy or completeness of electronic copies of this plan sheet.

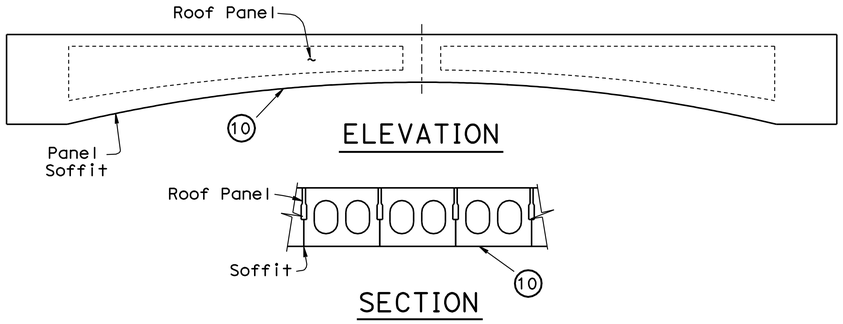

ELEVATION

SECTION

TYPICAL INTERIOR PANEL

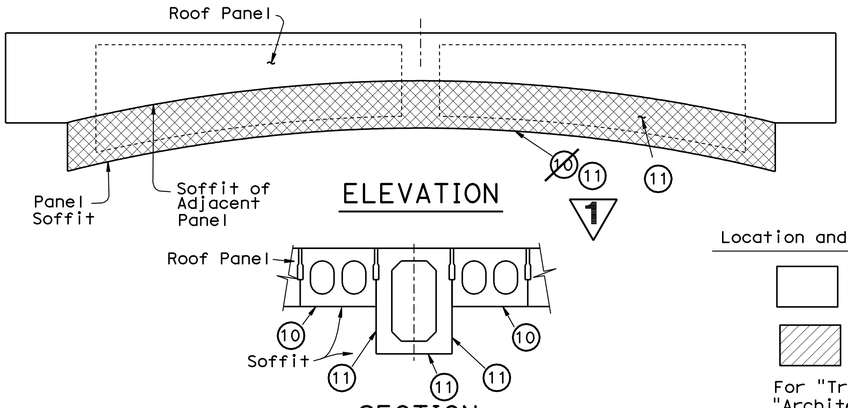

ELEVATION

SECTION

TYPICAL PANEL AT COLUMN

Location and Type Limits of Architectural Treatment

10 Type 10 — 11 Type 11

12 Type 12 — 13 Type 13

For "Treatment Type Details", see "Architectural Treatment Details No. 7" Sheet

ROOF PANEL TREATMENT LIMITS DETAILS

1/8"= 1'-0"

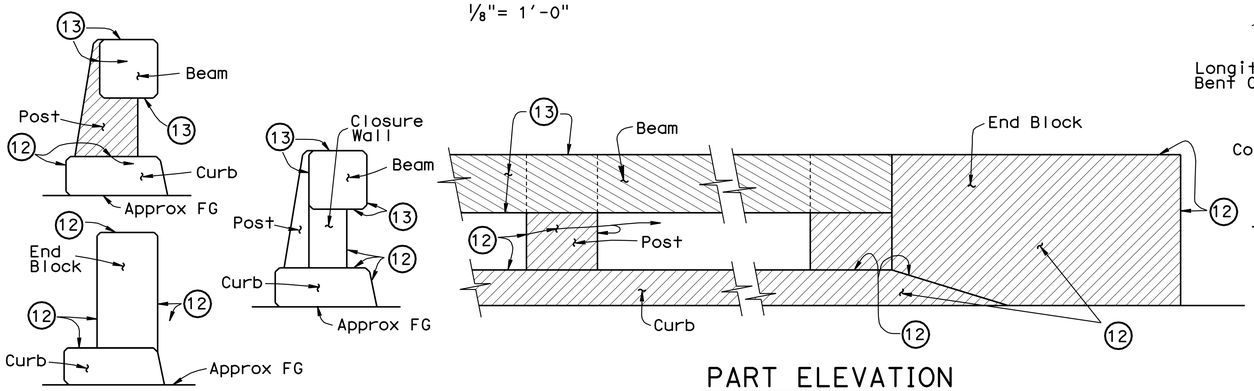

SECTIONS

PART ELEVATION

BARRIER TREATMENT LIMITS DETAILS

No Scale

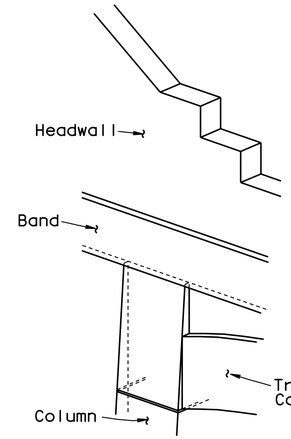

INTERIOR BENT COLUMN AT HEADWALL

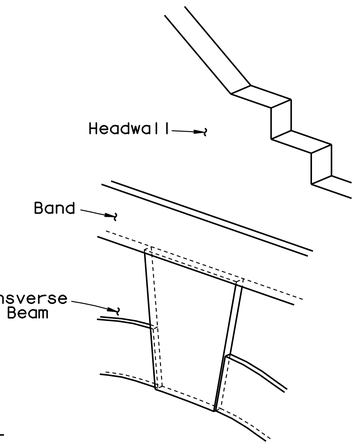

KEYSTONE BLOCK AT HEADWALL

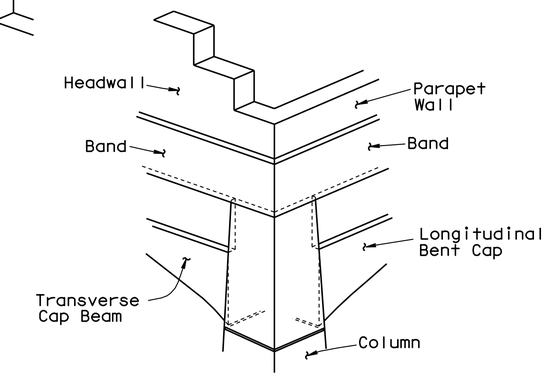

EXTERIOR BENT COLUMN AT HEADWALL

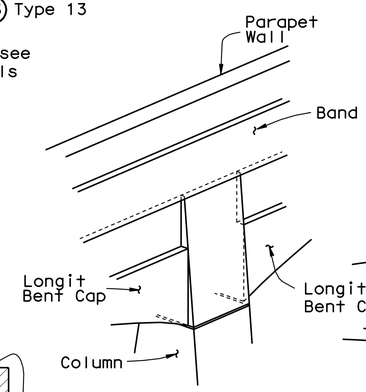

EXTERIOR BENT COLUMN AT PARAPET WALL

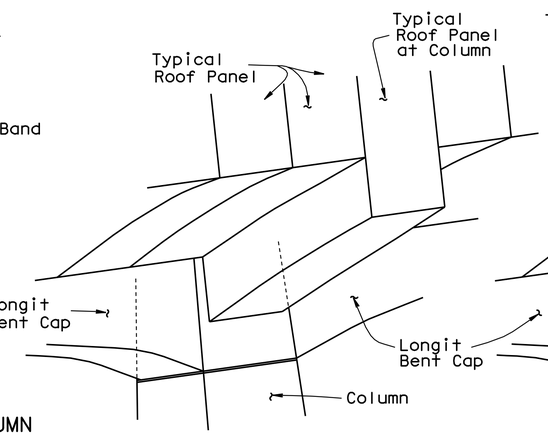

BENT COLUMN AT ROOF PANELS INTERIOR VIEW

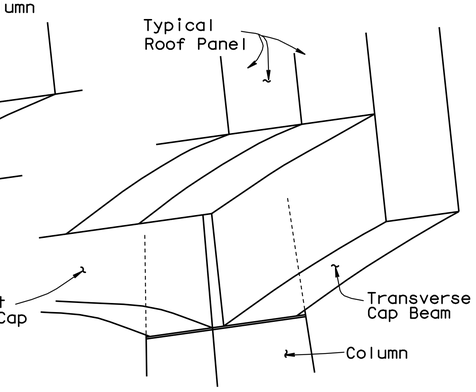

BENT COLUMN AT TRANSVERSE CAP BEAM INTERIOR VIEW

3-D VIEWS

No Scale

Architectural Treatment Not Shown

3-D Views Intended to Highlight Surface Offsets

1 **REVISED PER ADDENDUM No. 1 DATED AUGUST 28, 2009**

DESIGN	BY M. Van De Pol	CHECKED P. Norboe	
DETAILS	BY M. Van De Pol	CHECKED P. Norboe	
QUANTITIES	BY M. Van De Pol	CHECKED R.C. T.O. K.M. G.D.	

STATE OF CALIFORNIA
DEPARTMENT OF TRANSPORTATION

DIVISION OF ENGINEERING SERVICES
STRUCTURE DESIGN
DESIGN BRANCH 9

BRIDGE NO. 44-0289
POST MILE 21.30

RAIN ROCKS ROCK SHED
ARCHITECTURAL TREATMENT DETAILS No. 3

STRUCTURES DESIGN DETAIL SHEET (ENGLISH) (REV. 10/25/05)

ORIGINAL SCALE IN INCHES FOR REDUCED PLANS 0 1 2 3

CU 05
EA 0E9601

DISREGARD PRINTS BEARING EARLIER REVISION DATES 01/01/07

REVISION DATES

SHEET 59 OF 79

FILE => rs-05-0e9601-59-archdets3.add

USERNAME => trmikest DATE PLOTTED => 28-AUG-2009 TIME PLOTTED => 10:30