DIST.	COUNTY	ROUTE	POST MILES TOTAL PROJECT	SHEET NO.	TOTAL SHEETS
04	CC	680	0.0/R12.8	501	504

REGISTERED ENGINEER - CIVIL 5-18-09

2-1-10
PLANS APPROVAL DATE

REGISTERED PROFESSIONAL ENGINEER Mike Van De Pol No. C35610 Exp. 09-30-09 CIVIL STATE OF CALIFORNIA

The State of California or its officers or agents shall not be responsible for the accuracy or completeness of electronic copies of this plan sheet.

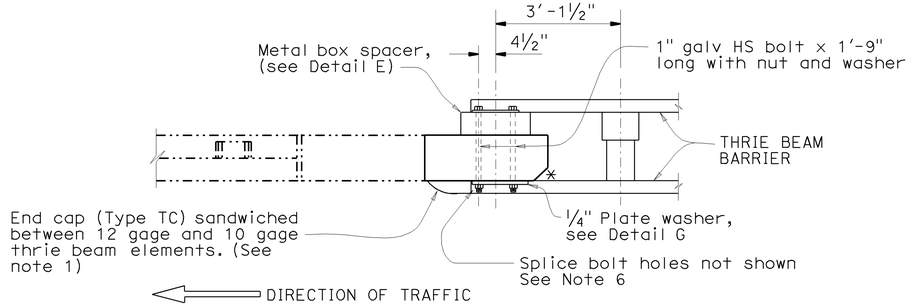

PLAN

* 5" x 5" chamfer

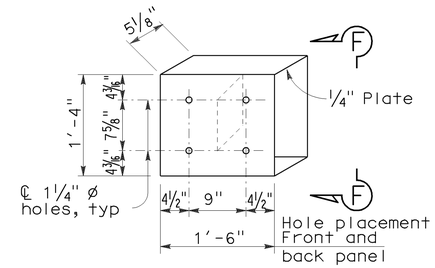

DETAIL E

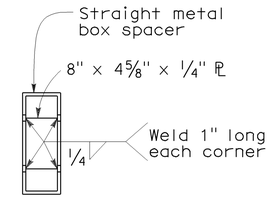

VIEW F-F

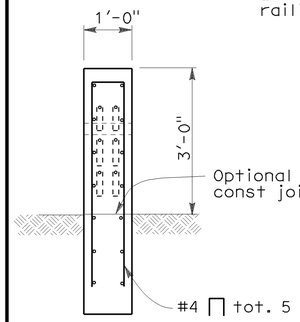

SECTION A-A

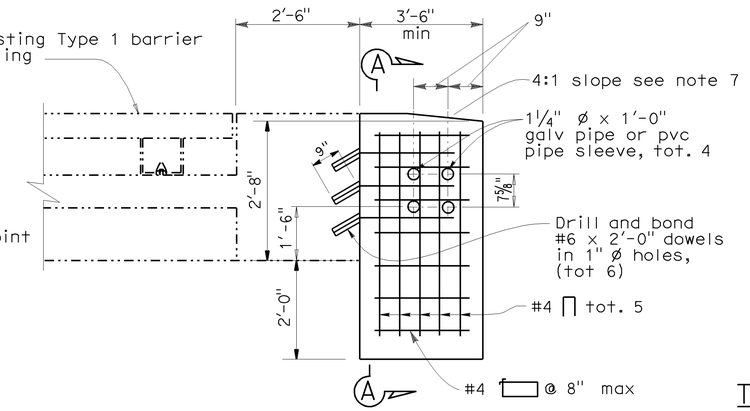

ELEVATION

TYPE I

TYPICAL SECTION

(TYPE 1 BARRIER)

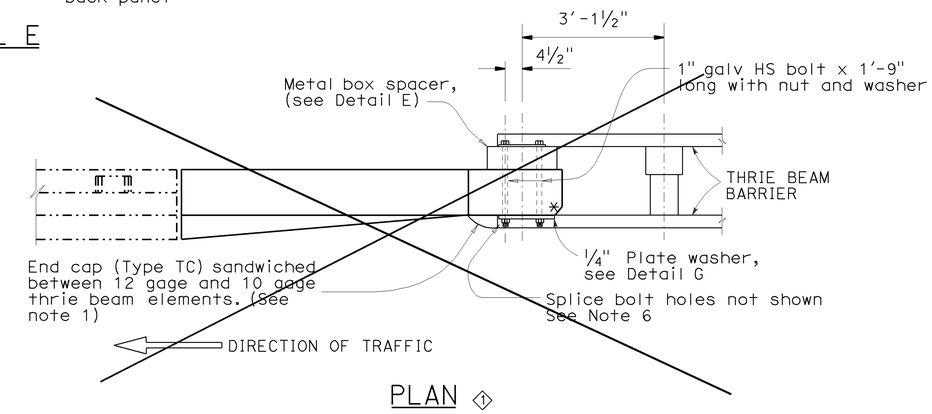

PLAN ◇1

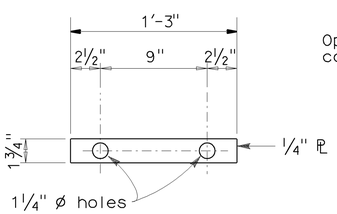

DETAIL G

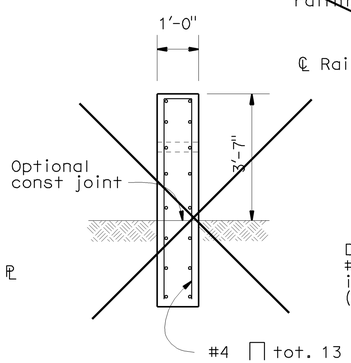

SECTION B-B ◇1

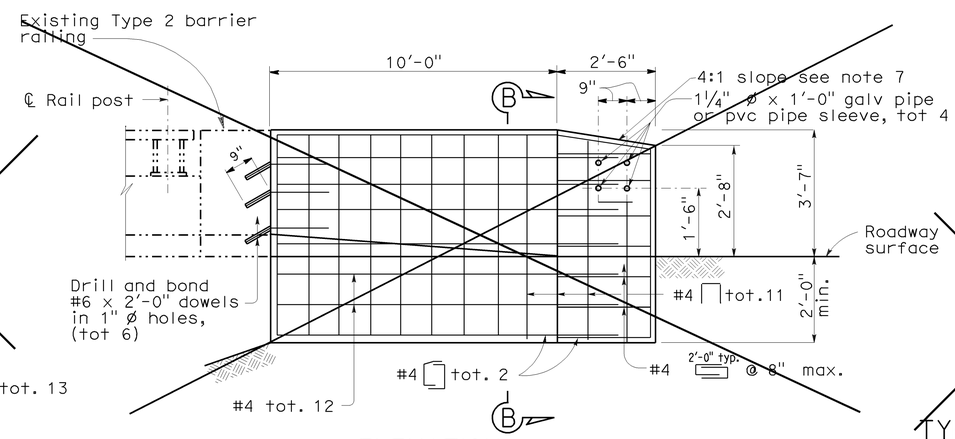

ELEVATION

TYPE 2 ◇1

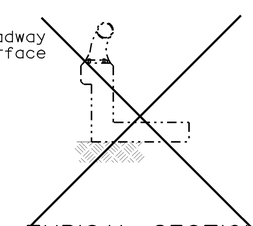

TYPICAL SECTION ◇1

(TYPE 2 BARRIER)

NO SCALE

NOTES:

1. For details not shown, see Standard Plans, July 2006.
2. Dependent dimensions will be verified in the field before fabricating any end connection to conform with existing paved conditions.
3. When end section is called for, modify typical terminal section to fit. See Detail E
4. All plates and bolts are galvanized.
5. Cut and remove portion of Type 1, 2 and BAGR as required.
6. Exterior splice bolt holes shall be the standard ⅞" x 1⅛" slot size for rail splices at post #T4 and the connection to the concrete barrier or railing. Interior splice bolt holes may be increased up to 1¼" dia. Washers shall be used with splice bolts on back side of rail element at post #T4 and connection to the concrete barrier or railing.
7. Taper the top of the end of the bridge railing at 4:1 to match the top elevation of the thrie beam rail element.
8. For locations of connection(s) see "Thrie Beam Guard Rail Anchor Block Application Chart" on "Joint Seal Details No. 1" snd "General Plan" sheets.

SPECIAL DETAILS

STANDARD DRAWING

FILE NO. xs16-400e

APPROVED BY T SATTER — RESPONSIBLE TECHNICAL SPECIALIST
APPROVAL DATE 4-15-08

RELEASED BY ROBERTO LACALLE — RESPONSIBLE OFFICE CHIEF
RELEASE DATE Revised

◇1 Detail does not apply

STATE OF CALIFORNIA DEPARTMENT OF TRANSPORTATION

DIVISION OF ENGINEERING SERVICES

BRIDGE NO. Varies
POST MILE Varies

ROUTE 680 BRIDGES

THRIE BEAM CONNECTION DETAILS

BARRIER RAILING TYPE 1 & TYPE 2

DS OSD 2147A (ENGLISH STANDARD DRAWING "XS" BORDER REV. 01/11/08)

ORIGINAL SCALE IN INCHES FOR REDUCED PLANS 0 1 2 3

CU 04239
EA 4470U1

DISREGARD PRINTS BEARING EARLIER REVISION DATES 1-27-09

REVISION DATES (PRELIMINARY STAGE ONLY)

SHEET 19 OF 22

USERNAME => trrichf

04-4470u1-t-brdt-typ1b.dgn

DATE PLOTTED => 16-FEB-2010 TIME PLOTTED => 11:01

DIST.	COUNTY	ROUTE	POST MILES TOTAL PROJECT	SHEET NO.	TOTAL SHEETS
04	CC	680	0.0/R12.8	502	504

REGISTERED ENGINEER - CIVIL 5-18-09

2-1-10
PLANS APPROVAL DATE

REGISTERED PROFESSIONAL ENGINEER Mike Van De Pol No. C35610 Exp. 09-30-09 CIVIL STATE OF CALIFORNIA

The State of California or its officers or agents shall not be responsible for the accuracy or completeness of electronic copies of this plan sheet.

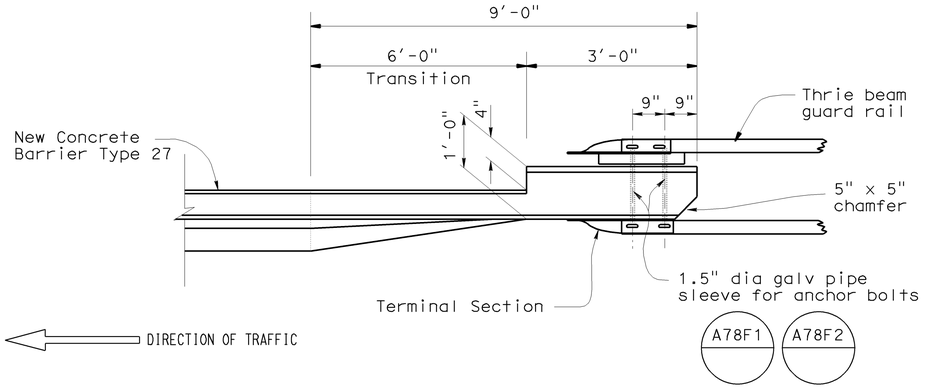

PLAN ①
No Scale

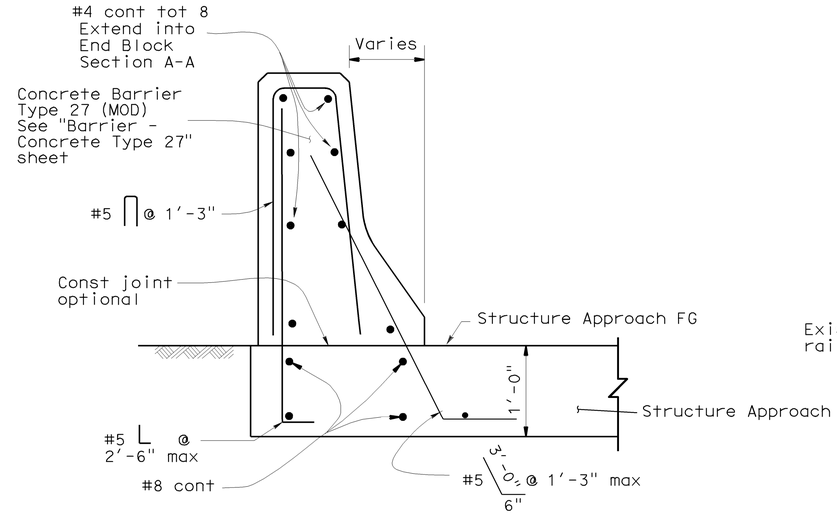

SECTION B-B
No Scale

① Note:
Structure approach slab reinforcement not shown

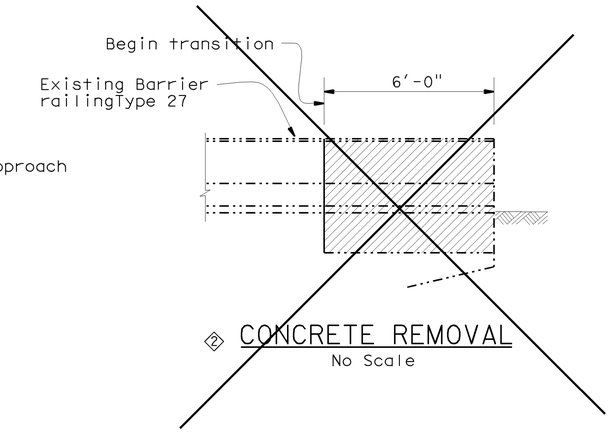

② CONCRETE REMOVAL
No Scale

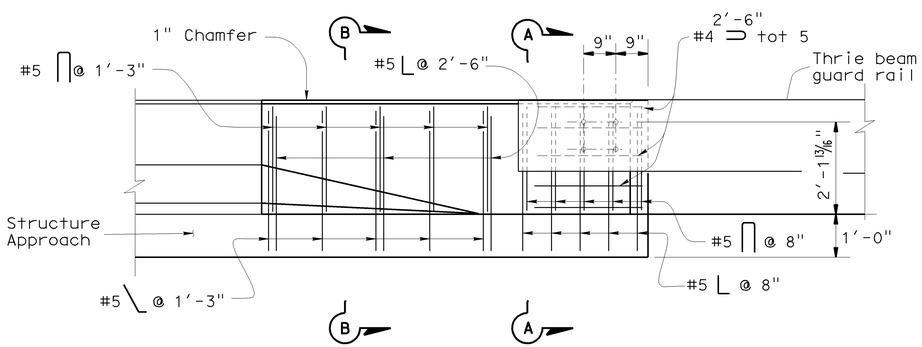

ELEVATION ①
No Scale

All barrier Reinf not shown

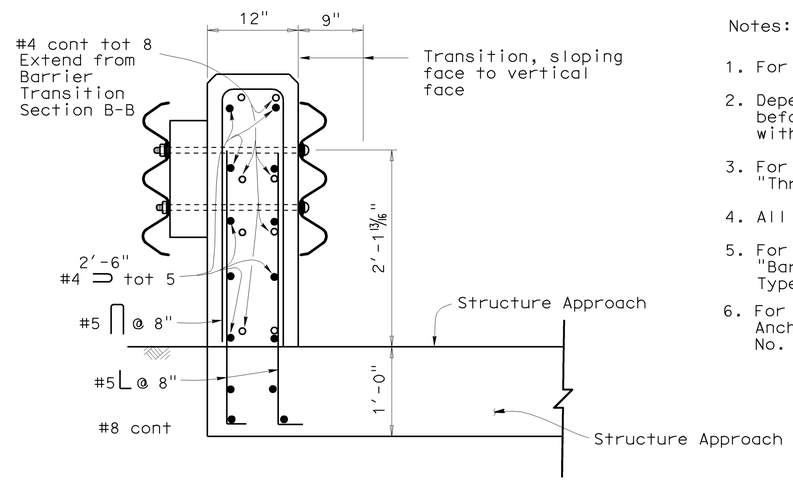

SECTION A-A
No Scale

① Note:
Structure approach slab reinforcement not shown

Notes:

1. For details not shown, see Standard Plans.
2. Dependent dimensions will be verified in the field before fabricating any end connection to conform with existing paved conditions.
3. For Thrie Beam Connection, see Standard Plans "Thrie Beam Barrier Connections To Bridge Railing"
4. All plates and bolts are galvanized.
5. For additional details see "Structure Approach Type R(30D)" "Barrier Replacement Detail No. 1" and "Concrete Barrier Type 27" sheets
6. For locations of connection(s) see "Thrie Beam Guard Rail Anchor Block Application Chart" on "Joint Seal Details No. 1" snd "General Plan" sheets.

Legend:

-·-·-·- Indicates existing structure.

——— Indicates new construction.

Concrete removal.

STANDARD PLAN SHEET NO.

DETAIL NO.

SPECIAL DETAILS

ROUTE 680 BRIDGES

THRIE BEAM CONNECTION DETAILS

BARRIER RAILING TYPE 27

STANDARD DRAWING

FILE NO. xs16-410e

APPROVED BY T SATTER
RESPONSIBLE TECHNICAL SPECIALIST
APPROVAL DATE 4-15-08

RELEASED BY ROBERTO LACALLE
RESPONSIBLE OFFICE CHIEF
RELEASE DATE Revised

① Modified Detail
② Detail does not apply

STATE OF CALIFORNIA
DEPARTMENT OF TRANSPORTATION

DIVISION OF ENGINEERING SERVICES

BRIDGE NO. Various
POST MILE Varies

CU 04239
EA 4470u1

DISREGARD PRINTS BEARING EARLIER REVISION DATES

REVISION DATES (PRELIMINARY STAGE ONLY) 1-21-09 2-03-09

SHEET 20 OF 22

DS OSD 2147A (ENGLISH STANDARD DRAWING "XS" BORDER REV. 01/11/08)

ORIGINAL SCALE IN INCHES FOR REDUCED PLANS 0 1 2 3

USERNAME => trrichf

04-4470u1-t-brdt-typ27.dgn

DATE PLOTTED => 16-FEB-2010 TIME PLOTTED => 11:01

DIST.	COUNTY	ROUTE	POST MILES TOTAL PROJECT	SHEET NO.	TOTAL SHEETS
04	CC	680	0.0/R12.8	503	504

REGISTERED ENGINEER - CIVIL 5-18-09

2-1-10
PLANS APPROVAL DATE

REGISTERED PROFESSIONAL ENGINEER Mike Van De Pol No. C35610 Exp. 09-30-09 CIVIL STATE OF CALIFORNIA

The State of California or its officers or agents shall not be responsible for the accuracy or completeness of electronic copies of this plan sheet.

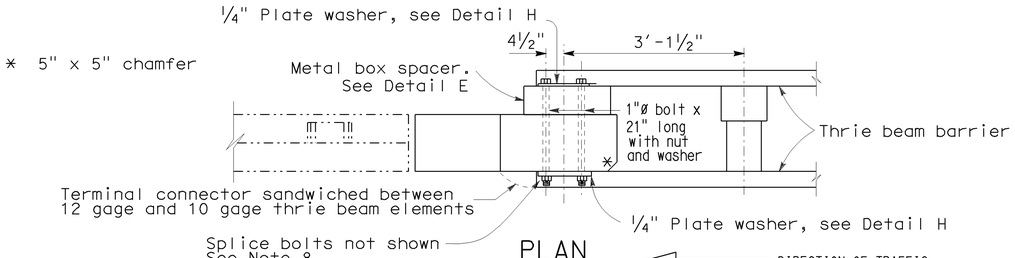

PLAN

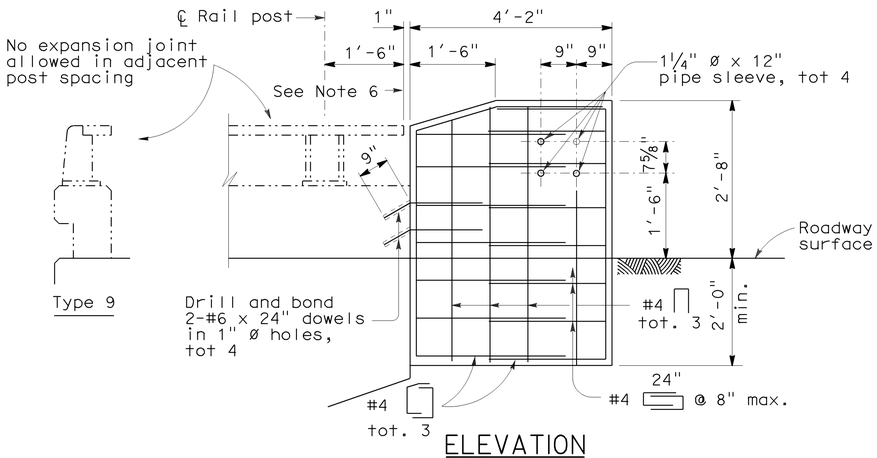

ELEVATION
EXISTING BARRIER RAILING TYPE 9
ALTERNATIVE 1

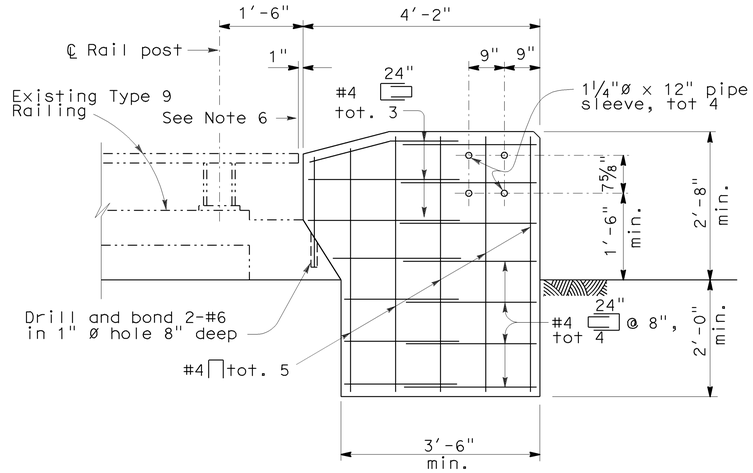

ELEVATION
EXISTING BARRIER RAILING TYPE 9
ALTERNATIVE 3

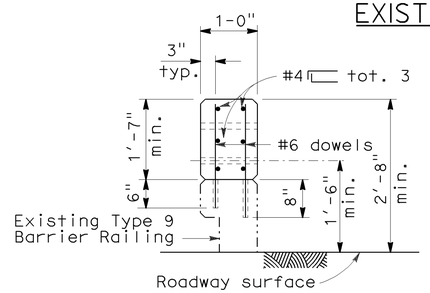

SECTION C-C

NOTES:

1. For details not shown, see Standard Plans.
2. Dependent dimensions will be verified in the field before fabricating any end connection to conform with existing paved conditions.
3. When end section is called for, modify typical terminal section to fit. See Detail E on Sheet 2.
4. For Thrie Beam connection, see Standard Plans "Thrie beam barrier connections to Bridge Railing".
5. All plates and bolts are galvanized.
6. Cut and remove that portion of Type 9, 9-11 and BAGR as required.
7. If rail is not continuous over 2 posts, use splice at expansion joint.
8. Exterior splice bolt holes shall be the standard 7/8" x 1 1/8" slot size for rail splices at Post # T4 and the connection to the concrete barrier or railing. Interior splice bolt holes may be increased up to 1 1/8" dia. Washers shall be used with splice bolts on back side of rail element at Post # T4 and connection to the concrete barrier or railing.
9. Taper the top of the end of the bridge railing at 4:1 to match the top elevation of the thrie beam rail element.
10. For locations of connection(s) see "Thrie Beam Guard Rail Anchor Block Application Chart" on "Joint Seal Details No. 1" snd "General Plan" sheets.

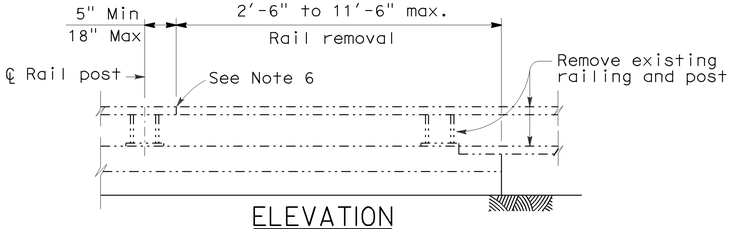

ELEVATION
Rail removal

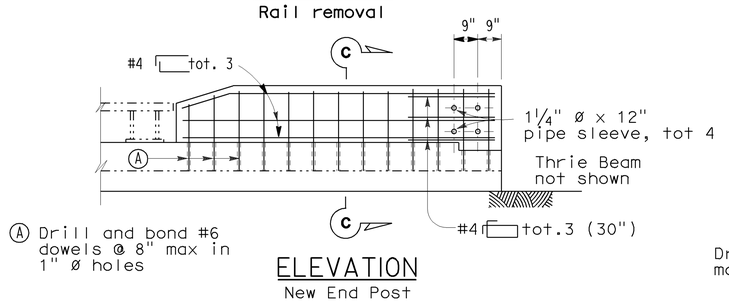

ELEVATION
New End Post

EXISTING BARRIER RAILING TYPE 9
ALTERNATIVE 2

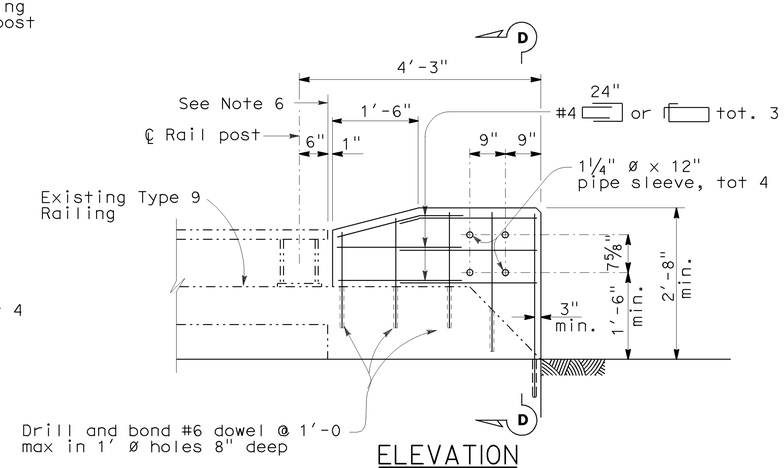

ELEVATION
EXISTING BARRIER RAILING TYPE 9
ALTERNATIVE 4

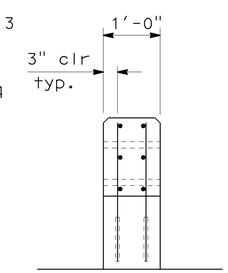

SECTION D-D

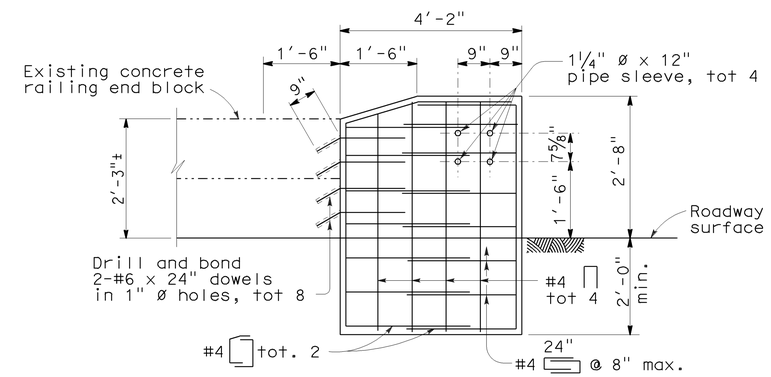

ELEVATION
EXISTING BARRIER RAILING TYPE 9
ALTERNATIVE 5

SHEET 1 OF 2

STANDARD DRAWING

FILE NO. xs16-430-1e

APPROVED BY T SATTER
RESPONSIBLE TECHNICAL SPECIALIST
APPROVAL DATE 4-15-08

RELEASED BY ROBERTO LACALLE
RESPONSIBLE OFFICE CHIEF
RELEASE DATE 4-15-08

STATE OF CALIFORNIA
DEPARTMENT OF TRANSPORTATION

DIVISION OF ENGINEERING SERVICES

BRIDGE NO. Varies
POST MILE Varies

ROUTE 680 BRIDGES
THRIE BEAM CONNECTION DETAILS
BARRIER RAILING TYPE 9 AND 9-11

DS OSD 2147A (ENGLISH STANDARD DRAWING "XS" BORDER REV. 01/11/08)

ORIGINAL SCALE IN INCHES FOR REDUCED PLANS 0 1 2 3

CU 04239
EA 4470U1

DISREGARD PRINTS BEARING EARLIER REVISION DATES

REVISION DATES (PRELIMINARY STAGE ONLY)

SHEET 21 OF 22

USERNAME => trrichf

04-4470u1-t-brdt-typ9_01.dgn

TIME PLOTTED => 11:01
DATE PLOTTED=FEB-2010

DIST.	COUNTY	ROUTE	POST MILES TOTAL PROJECT	SHEET NO.	TOTAL SHEETS
04	CC	680	0.0/R12.8	504	504

REGISTERED ENGINEER - CIVIL 5-18-09

2-1-10
PLANS APPROVAL DATE

REGISTERED PROFESSIONAL ENGINEER Mike Van De Pol No. C35610 Exp. 09-30-09 CIVIL STATE OF CALIFORNIA

The State of California or its officers or agents shall not be responsible for the accuracy or completeness of electronic copies of this plan sheet.

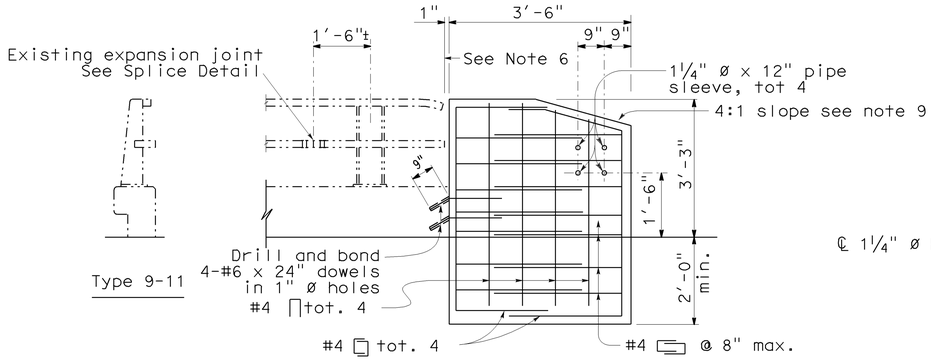

ELEVATION
EXISTING BARRIER RAILING TYPE 9-II
ALTERNATIVE 1

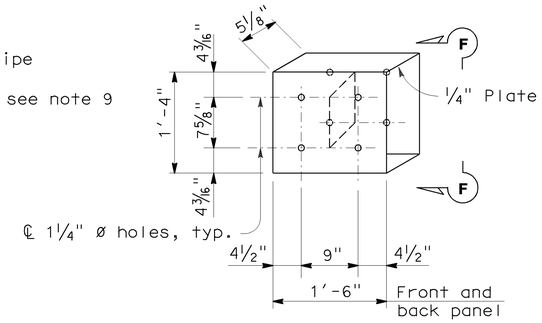

DETAIL E

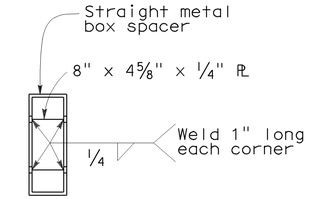

VIEW F-F

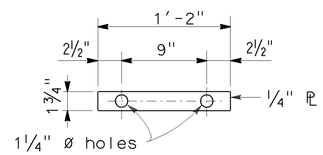

DETAIL H

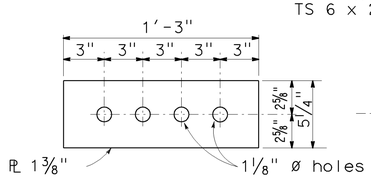

SPLICE PLATE

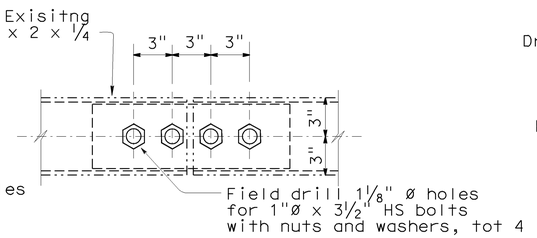

MODIFIED TUBE

RAIL SPLICE DETAIL
SEE NOTE 7

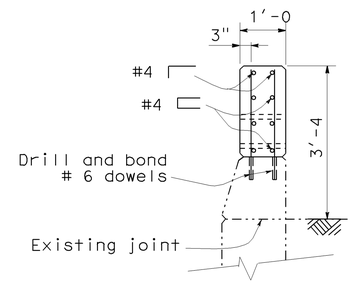

SECTION G-G

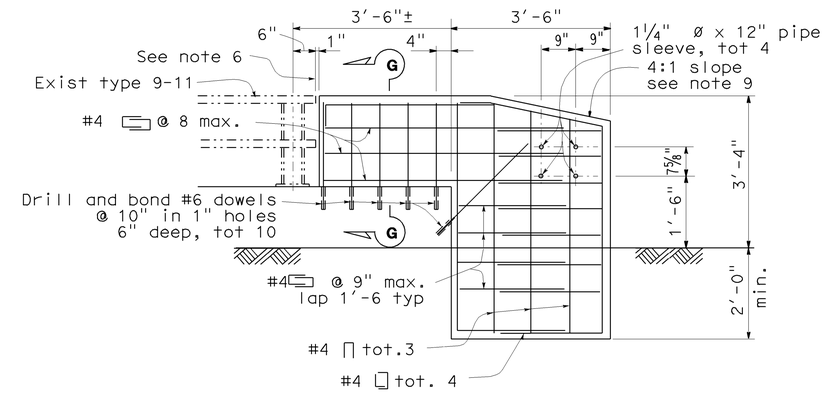

ELEVATION
EXISTING BARRIER RAILING TYPE 9-II
ALTERNATIVE 3

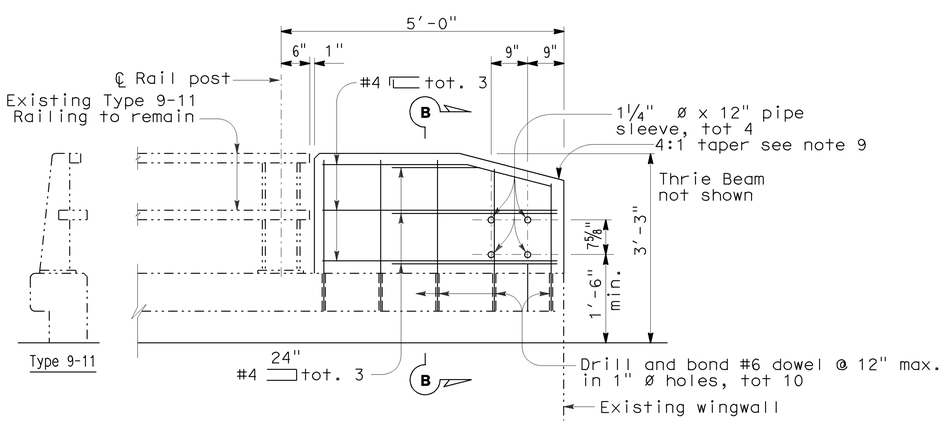

EXISTING BARRIER RAILING TYPE 9-II
ALTERNATIVE 2

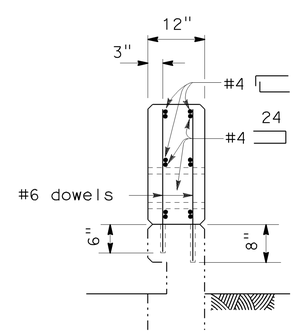

SECTION B-B

For Note 9, see "Thrie Beam Connection Details, Barrier Railing Type 9 and 9-11 Sheet 1 of 2" Sheet

NO SCALE

SHEET 2 OF 2

ROUTE 680 BRIDGES
THRIE BEAM CONNECTION DETAILS
BARRIER RAILING TYPE 9 AND 9-11

STANDARD DRAWING

FILE NO. xs16-430-2e

APPROVED BY T SATTER
RESPONSIBLE TECHNICAL SPECIALIST
APPROVAL DATE 4-15-08

RELEASED BY ROBERTO LACALLE
RESPONSIBLE OFFICE CHIEF
RELEASE DATE 4-15-08

STATE OF CALIFORNIA
DEPARTMENT OF TRANSPORTATION

DIVISION OF ENGINEERING SERVICES

BRIDGE NO. Varies
POST MILE Varies

DS OSD 2147A (ENGLISH STANDARD DRAWING "XS" BORDER REV. 01/11/08)

ORIGINAL SCALE IN INCHES FOR REDUCED PLANS 0 1 2 3

CU 04239
EA 4470u1

DISREGARD PRINTS BEARING EARLIER REVISION DATES

REVISION DATES (PRELIMINARY STAGE ONLY)

SHEET 22 OF 22

USERNAME => trrichf

04-4470u1-t-brdt-typ9_02.dgn

DATE PLOTTED => 16-FEB-2010 TIME PLOTTED => 11:01