Dist	COUNTY	ROUTE	POST MILES TOTAL PROJECT	SHEET No.	TOTAL SHEETS
04	SM	280	18.3,18.6	1	19

INDEX OF PLANS

SHEET No.	DESCRIPTION
1	TITLE SHEET AND LOCATION MAP
2	SUMMARY OF QUANTITIES
3 - 17	ELECTRICAL PLANS
18 - 19	REVISED STANDARD PLAN

THE STANDARD PLANS LIST APPLICABLE TO THIS CONTRACT IS INCLUDED IN THE NOTICE TO BIDDERS AND SPECIAL PROVISIONS BOOK.

STATE OF CALIFORNIA

DEPARTMENT OF TRANSPORTATION

PROJECT PLANS FOR CONSTRUCTION ADJACENT TO STATE HIGHWAY

IN SAN MATEO COUNTY
IN MILLBRAE
AT THE LARKSPUR DRIVE PUMPING PLANT

TO BE SUPPLEMENTED BY STANDARD PLANS DATED 2010

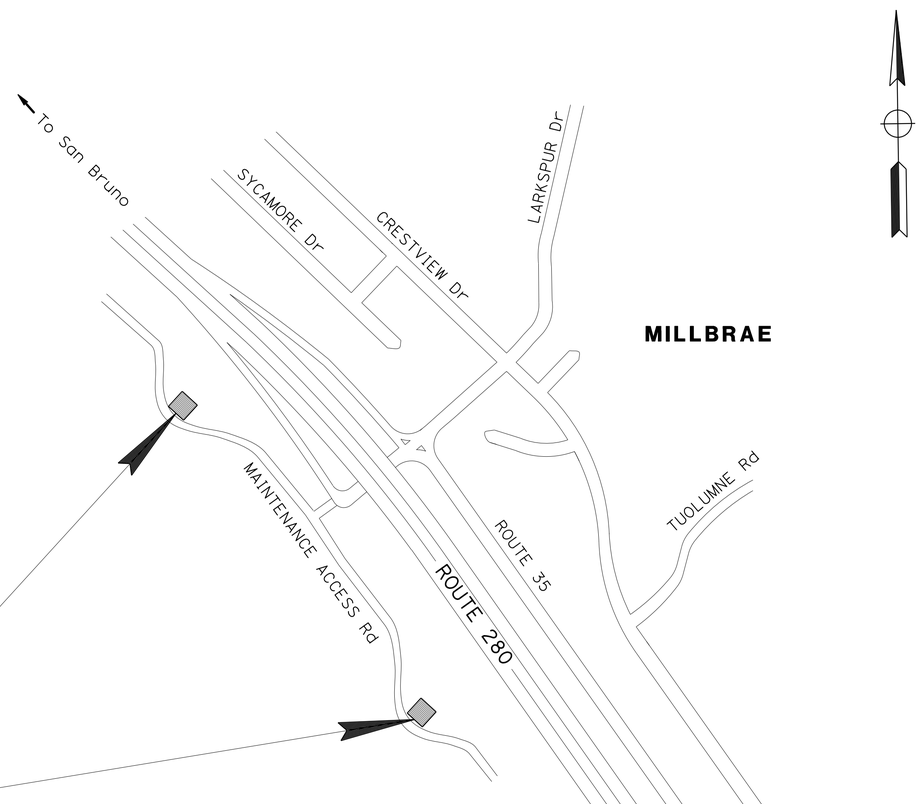

LOCATION OF CONSTRUCTION
LARKSPUR DRIVE PUMPING PLANT
0208W (NORTH)

LOCATION OF CONSTRUCTION
LARKSPUR DRIVE PUMPING PLANT
0229W (SOUTH)

NO SCALE

THE CONTRACTOR SHALL POSSESS THE CLASS (OR CLASSES) OF LICENSE AS SPECIFIED IN THE "NOTICE TO BIDDERS."

PROJECT MANAGER: RAMSES SARGISS

DESIGN MANAGER: BEHNAM EDALATI

H. Kochekali 12-24-15
PROJECT ENGINEER DATE
REGISTERED ELECTRICAL ENGINEER

REGISTERED PROFESSIONAL ENGINEER Homayun Kochekali No. 17281 Exp. 6-30-16 ELECTRICAL STATE OF CALIFORNIA

January 19, 2016
PLANS APPROVAL DATE

THE STATE OF CALIFORNIA OR ITS OFFICERS OR AGENTS SHALL NOT BE RESPONSIBLE FOR THE ACCURACY OR COMPLETENESS OF SCANNED COPIES OF THIS PLAN SHEET.

CONTRACT No.	04-3J6904
PROJECT ID	0415000406

LAST REVISION 12-23-15 DATE PLOTTED => 28-JAN-2016 TIME PLOTTED => 12:32

Dist	COUNTY	ROUTE	POST MILES TOTAL PROJECT	SHEET No.	TOTAL SHEETS
04	SM	280	18.3,18.6	2	19

H. Kochekali 12-24-15
REGISTERED ELECTRICAL ENGINEER DATE

1-19-16
PLANS APPROVAL DATE

REGISTERED PROFESSIONAL ENGINEER
Homayun Kochekali
No. 17281
Exp. 6-30-16
ELECTRICAL
STATE OF CALIFORNIA

THE STATE OF CALIFORNIA OR ITS OFFICERS OR AGENTS SHALL NOT BE RESPONSIBLE FOR THE ACCURACY OR COMPLETENESS OF SCANNED COPIES OF THIS PLAN SHEET.

SUMMARY OF QUANTITIES

ITEM DESCRIPTION	UNIT	QUANTITY (N)
No. 5(T) PULL BOX	EA	2
PUMPING PLANT METAL WORK	LB	400

(N) NOT A SEPARATE PAY ITEM, FOR INFORMATION ONLY

STATE OF CALIFORNIA - DEPARTMENT OF TRANSPORTATION
Caltrans®
ELECTRICAL

FUNCTIONAL SUPERVISOR: BEHNAM EDALATI
CALCULATED-DESIGNED BY: HOMAYUN KOCHEKALI
CHECKED BY: BEHNAM EDALATI
REVISED BY: BE
DATE REVISED: 1-28-15

SUMMARY OF QUANTITIES

Q-1

LAST REVISION 01-28-15
DATE PLOTTED => 24-MAR-2016
TIME PLOTTED => 09:54

Dist	COUNTY	ROUTE	POST MILES TOTAL PROJECT	SHEET No.	TOTAL SHEETS
04	SM	280	18.3,18.6	3	19

H. Kochekali 12-24-15
REGISTERED ELECTRICAL ENGINEER DATE

1-19-16
PLANS APPROVAL DATE

REGISTERED PROFESSIONAL ENGINEER Homayun Kochekali No. 17281 Exp. 6-30-16 ELECTRICAL STATE OF CALIFORNIA

THE STATE OF CALIFORNIA OR ITS OFFICERS OR AGENTS SHALL NOT BE RESPONSIBLE FOR THE ACCURACY OR COMPLETENESS OF SCANNED COPIES OF THIS PLAN SHEET.

ABBREVIATIONS

A

A	AMPERES
AC	ALTERNATING CURRENT or ASPHALT CONCRETE
A/C	AIR CONDITIONING UNIT
ACS	AIR COMPRESSOR STARTER
AFCI	ARC FAULT CIRCUIT INTERRUPTER
AI	ANALOG INPUT
AL	ALARM LIGHT
AO	ANALOG OUTPUT
Approx	APPROXIMATE
AR	ALARM RESET
AVC	AIR VOLUME CONTROLLER

B

BC	BARE COPPER
BD	BUILDING DISCONNECT
Bldg	BUILDING
BP	BOOSTER PUMP
Brk	BREAKER

C

C	CONDUIT
Cat	CATEGORY
CB	CIRCUIT BREAKER
CC	CENTER CHANNEL LIGHT
CCTV	CLOSED CIRCUIT TELEVISION
CD	CONTROL DISCONNECT
Ckt	CIRCUIT
CL	CHAIN LINK
℄	CENTER LINE
Clr	CLEAR or CLEARANCE
CM	CENTER MARGIN LIGHT
CMS	CHANGEABLE MESSAGE SIGN
COMM	COMMUNICATION
Conc	CONCRETE
CR	CONTROL RELAY
CS	CURRENT SWITCH
CT	CURRENT TRANSFORMER

D

D	DEPTH
DC	DIRECT CURRENT
DI	DIGITAL INPUT
Dia	DIAMETER
DLC	LOOP DETECTOR LEAD-IN CABLE
DMM	DIGITAL MULTIMETER
DO	DIGITAL OUTPUT
DP	DUPLEX PLUG RECEPTACLE
DS	DOOR SWITCH

E

(E)	EXISTING
EB	EASTBOUND
EF	EXHAUST FAN
Elev	ELEVATION
EMS	EXTINGUISHABLE MESSAGE SIGN

F

F	FUSE
FG	FINISH GRADE
FL	FAILURE LIGHT
FLA	FLASHER
Flex	FLEXIBLE CONDUIT
FLS	FLOW SWITCH
FO	FIBER OPTIC
FR	FAILURE RESET or FLAME RESISTANT
FS	FLOAT SWITCH

G

G	GROUND
Ga	GAUGE
Galv	GALVANIZED
GFCI	GROUND FAULT CIRCUIT INTERRUPTER
GRS	GALVANIZED RIGID STEEL

H

hp	HORSEPOWER
HPS	HIGH PRESSURE SODIUM

I

IC	IRRIGATION CONTROLLER
ICC	IRRIGATION CONTROLLER CABINET
IL	INDICATING LIGHT
IR	INDUCTION RELAY
ISR	INTRINSICALLY SAFE RELAY

J

JB	JUNCTION BOX

K

kV	KILOVOLT
kVA	KILOVOLT AMPERES
kW	KILOWATT

L

L	LIGHT or LENGTH
LC	LIGHTING CONTACTOR
LCD	LIQUID CRYSTAL DISPLAY
LCP	LIGHTING CONTROL PANEL
LD	LIGHT DISCONNECT
LDCI	LEAK DETECTOR CIRCUIT INTERRUPTER
LED	LIGHT EMITTING DIODE
LL	LIQUID LEVEL RELAY
LLC	LIQUID LEVEL CONTROLLER
LP	LIGHT PANEL
LPS	LOW PRESSURE SODIUM
LS	LIGHT SWITCH
LT	LIGHT TRANSFORMER
LTO	LIGHT TRANSFORMER OVERLOAD
LTPD	LIGHT TRANSFORMER PRIMARY DISCONNECT
LTSD	LIGHT TRANSFORMER SECONDARY DISCONNECT

M

Max	MAXIMUM
MB	MAIN BREAKER
MC	METALLIC CONDUIT
MCP	MOTOR CIRCUIT PROTECTOR
MCC	MOTOR CONTROL CENTER
MD	MOTOR DISCONNECT
MH	MOUNTING HEIGHT
Min	MINIMUM
Misc	MISCELLANEOUS
MSB	MAIN SWITCHBOARD
MT	EMPTY CONDUIT

N

(N)	NEW
Nav	NAVIGATIONAL LIGHTS
NB	NEUTRAL BUS or NORTHBOUND
NC	NORMALLY CLOSED
No.	NUMBER
Nos.	NUMBERS
NO	NORMALLY OPEN
NSW	NEUTRAL SWITCHING BREAKER

O

O/C	ON CENTER
OG	ORIGINAL GROUND
OH	OVERHEAD
OL	OVERLOAD

P

P	POLE (CIRCUIT BREAKER)
PB	PULL BOX or PUSHBUTTON
PCC	PORTLAND CONCRETE CEMENT
PCP	PUMP CONTROL PANEL
PEC	PHOTOELECTRIC CONTROL
PEU	PHOTOELECTRIC UNIT
PFR	PHASE FAILURE RELAY
PFRD	PHASE FAILURE RELAY DISCONNECT
ℙ	PLATE
PL	PILOT LIGHT
PS	PRESSURE SWITCH/POWER SWITCH
PTS	POWER TRANSFER SWITCH
PV	PHOTOVOLTAIC
PVC	POLYVINYL CHLORIDE

R

RD	RECEPTACLE DISCONNECT
RES	RESISTOR
Rm	ROOM
RTB	RADIO TERMINAL BOARD
R/W	RIGHT OF WAY

S

S	STARTER COIL
Sch	SCHEDULE
SD	SERVICE DISCONNECT
Sec	SECONDS
SFR	SEAL FAILURE RELAY
SL	SUMP LIGHT
SPR	STANDBY POWER RECEPTACLE
Sq	SQUARE
SS	SELECTOR SWITCH
ST	STARTER
Std	STANDARD
SV	SOLENOID VALVE
SWIM	SLOW WEIGH-IN-MOTION

T

T	THERMOSTAT
TB	TERMINAL BLOCK
TC	TELEPHONE CABLE
TDR	TIME DELAY RELAY
TGLS	TOGGLE SWITCH
TM	TIME METER
Tot	TOTAL
TS	TIMER SWITCH
TSW	TEST SWITCH
TTB	TELEPHONE TERMINAL BOARD
Typ	TYPICAL

U

UPS	UNINTERRUPTIBLE POWER SUPPLY

V

V	VOLT(S)
Var	VARIABLE or VARIES

W

W	WATT or WIDTH
WB	WESTBOUND
WIM	WEIGH-IN-MOTION
WLS	WATER LEVEL SWITCH
WP	WEATHERPROOF
WSMS	WEIGH STATION MESSAGE SIGN

X

XFMR	TRANSFORMER

SYMBOLS

∠	ANGLE
@	AT
°	DEGREES
Δ	DELTA
Ω	OHM(S)
Ø	PHASE
±	PLUS OR MINUS

PROJECT NOTES:

1. SEPARATE GROUNDED (NEUTRAL) CONDUCTOR SHALL BE USED FOR EACH 120-VOLT CIRCUIT.
2. HOMERUNS TO PANELBOARDS SHALL BE INSTALLED AS SHOWN ON THE PLANS. HOMERUNS SHALL NOT BE COMBINED.
3. A SINGLE INSULATED EQUIPMENT GROUNDING CONDUCTOR, SIZED AS REQUIRED, SHALL BE INSTALLED IN EACH CONDUIT RUN.

STANDARD NOTES:

- AB ABANDON. IF APPLIED TO CONDUIT, REMOVE CONDUCTORS.
- BC INSTALL PULL BOX IN EXISTING CONDUIT RUN.
- CB INSTALL CONDUIT INTO EXISTING PULL BOX.
- CC CONNECT NEW AND EXISTING CONDUIT. REMOVE EXISTING CONDUCTORS AND INSTALL CONDUCTORS AS INDICATED.
- CF CONDUIT TO REMAIN FOR FUTURE USE. REMOVE CONDUCTORS, INSTALL PULL ROPE AND PLUG.
- FA REMOVE FOUNDATION ABOVE GRADE AND ABANDON FOUNDATION BELOW GRADE.
- RL RELOCATE EQUIPMENT.
- RLD RELOCATED EQUIPMENT.
- SC SPLICE NEW TO EXISTING CONDUCTORS.

ELECTRICAL NOTES AND ABBREVIATIONS

E-1

REVISED BY	DATE REVISED
BE	12-22-15

HOMAYUN KOCHEKALI — BEHNAM EDALATI
CALCULATED-DESIGNED BY — CHECKED BY
FUNCTIONAL SUPERVISOR: BEHNAM EDALATI

STATE OF CALIFORNIA - DEPARTMENT OF TRANSPORTATION
Caltrans®
ELECTRICAL

LAST REVISION 12-22-15 | DATE PLOTTED => 28-JAN-2016 | TIME PLOTTED => 12:32

Dist	COUNTY	ROUTE	POST MILES TOTAL PROJECT	SHEET No.	TOTAL SHEETS
04	SM	280	18.3,18.6	4	19

H. Kochekali 12-24-15
REGISTERED ELECTRICAL ENGINEER DATE

1-19-16
PLANS APPROVAL DATE

REGISTERED PROFESSIONAL ENGINEER Homayun Kochekali No. 17281 Exp. 6-30-16 ELECTRICAL STATE OF CALIFORNIA

THE STATE OF CALIFORNIA OR ITS OFFICERS OR AGENTS SHALL NOT BE RESPONSIBLE FOR THE ACCURACY OR COMPLETENESS OF SCANNED COPIES OF THIS PLAN SHEET.

SYMBOL	DESCRIPTION
	POLE-TOP ELECTROLIER
	POLE-ARM ELECTROLIER
CEILING WALL	
S S	SURFACE FLUORESCENT, METAL HALIDE, LED, OR SODIUM VAPOR FIXTURE
R R	RECESSED FLUORESCENT, METAL HALIDE, LED, OR SODIUM VAPOR FIXTURE
X X	EXIT LIGHT
	SURFACE OR PENDANT INDIVIDUAL FLUORESCENT OR LED FIXTURE
R	RECESSED INDIVIDUAL FLUORESCENT OR LED FIXTURE
	SURFACE OR PENDANT CONTINUOUS ROW FLUORESCENT OR LED FIXTURES
NOTE:	A LOWER CASE LETTER NEAR GRAPHIC LIGHTING FIXTURE SYMBOL DENOTES THAT FIXTURE IS CONTROLLED BY A SIMILARLY MARKED SWITCH, AN ALPHA-NUMERIC SYMBOL NEAR GRAPHIC LIGHTING FIXTURE SYMBOL DENOTES FIXTURE TYPE, (I=INCANDESCENT, F=FLUORESCENT, MH=METAL HALIDE, H=HIGH PRESSURE SODIUM VAPOR, L=LED), DESIGN TYPE, NUMBER OF LAMPS AND WATTAGE.
	EXAMPLE : (4) F2-2x32 — 32 WATT LAMPS; 2 LAMPS; DESIGN TYPE; FLUORESCENT; NUMBER OF FIXTURES
B B	BLANK OUTLET
J J	JUNCTION BOX
D	DROP CORD
	SINGLE RECEPTACLE OUTLET
	DUPLEX RECEPTACLE OUTLET
(GFCI)	DUPLEX RECEPTACLE OUTLET (WITH GFCI)
(GFCI) WP	DUPLEX RECEPTACLE OUTLET, WEATHERPROOF (WITH GFCI)
	SINGLE, SPECIAL PURPOSE RECEPTACLE OUTLET
	DUPLEX, SPECIAL PURPOSE RECEPTACLE OUTLET
R	RANGE OUTLET
C	CLOCK HANGER RECEPTACLE
F	FAN HANGER RECEPTACLE
	FLOOR SINGLE RECEPTACLE OUTLET
	FLOOR DUPLEX RECEPTACLE OUTLET
	FLOOR SPECIAL PURPOSE OUTLET
	FLOOR RADIO OUTLET
	FLOOR TELEPHONE OUTLET
	MULTI-FLOOR OUTLET, 2 OR MORE GANG
	MULTI-OUTLET ASSEMBLY
S	SWITCH AND SINGLE RECEPTACLE
S	SWITCH AND DUPLEX RECEPTACLE
	RADIO OUTLET
	COMMUNICATION OUTLET
	SOUND SYSTEM LOUD SPEAKER OUTLET
R	RADIO OUTLET
TV	TELEVISION OUTLET
M	MICROPHONE OUTLET
T	THERMOSTAT

SYMBOL	DESCRIPTION
S	SINGLE-POLE SWITCH
S_2	DOUBLE-POLE SWITCH
S_3	THREE-WAY SWITCH
S_4	FOUR-WAY SWITCH
S_D	AUTOMATIC DOOR
S_K	KEY OPERATED SWITCH
S_P	SWITCH AND PILOT LIGHT
S_{MC}	MOMENTARY CONTACT SWITCH
S_{RC}	REMOTE CONTROL SWITCH
S_{WP}	WEATHERPROOF SWITCH
S_F	FAN SWITCH
S_L	LIGHT SWITCH
S_H	HEATER SWITCH
S_{VS}	VARIABLE SPEED MOTOR CONTROL SWITCH
S_{CHLF}	TWO TIMER SWITCHES, ONE SWITCH FOR LIGHT AND FAN AND ONE SWITCH FOR HEAT LAMP
S^O_1	OCCUPANCY SENSOR WALL SWITCH, SINGLE LEVEL
S^O_2	OCCUPANCY SENSOR WALL SWITCH, BILEVEL
S_M	MOTION SENSOR SWITCH
S_T	MANUAL MOTOR STARTING SWITCH, THERMAL OVERLOAD TYPE
S_{HP}	MANUAL MOTOR STARTING SWITCH, WITHOUT OVERLOAD ELEMENT
T_S	TIMER SWITCH
	PUSHBUTTON
L	PUSHBUTTON STATION, NC, WITH LOCKING DEVICE FOR OPEN
	PUSHBUTTON STATION MOTOR CONTROL
	BUZZER
	BELL
	COMBINATION BELL-BUZZER
PS	PRESSURE SWITCH/POWER SWITCH
R	CONTROL RELAY
FS	FLOW SWITCH
PEU	PHOTOELECTRIC UNIT
C	HAND DRYER NOZZLE
H	HAND DRYER
	FLUSH-MOUNTED PANELBOARD AND CABINET
	SURFACE-MOUNTED PANELBOARD AND CABINET
	LIGHTING PANEL
	POWER PANEL
	COMBINATION LIGHTING AND POWER
MC	MOTOR CONTROLLER
	DISCONNECT SWITCH
	CONDUIT CONCEALED IN CEILING OR WALL
	CONDUIT CONCEALED IN FLOOR
	CONDUIT EXPOSED
#/	CROSS-LINES INDICATE NUMBER OF #12 AWG CONDUCTORS. LONGER CROSS-LINE INDICATES 1#12 AWG (G) FOR EQUIPMENT GROUNDING CONDUCTOR. NO CROSS-LINE INDICATES 2#12 WITH 1#12 (G) UNLESS OTHERWISE NOTED. ALL CONDUIT ½" UNLESS OTHERWISE NOTED.
A1,2	HOMERUN TO PANELBOARD, ARROWS INDICATE NUMBER OF CIRCUITS, LETTER DENOTES PANELBOARD, NUMERAL DENOTES CIRCUIT

SYMBOL	DESCRIPTION
—SM—	SURFACE METAL RACEWAY
(2) ½"C, PVC, 2#12	CONDUCTOR INFO (PER CONDUIT); CONDUIT TYPE; CONDUIT SIZE; NUMBER OF CONDUITS (NO NUMBER INDICATES ONE CONDUIT)
—MC—	CONDUIT, RIGID STEEL, UNDERGROUND
—PVC—	CONDUIT, POLYVINYL CHLORIDE, UNDERGROUND
	CONDUIT, FLEXIBLE
	CONDUIT, TURN UP
	CONDUIT, TURN DOWN
	CONDUIT SEAL, EXPLOSION-PROOF
X	CONDUIT, EXPANSION JOINT
	ADAPTER, ONE TYPE CONDUIT TO ANOTHER
	POLE
OC	OCCUPANCY SENSOR
P	OCCUPANCY SENSOR POWER PACK
P	MANUAL PULL STATION
AV	AUDIO/VISUAL ALARM DEVICE
H	HEAT DETECTOR
S	SMOKE DETECTOR
G	GLASS BREAK DISCRIMINATOR
C	MAGNETIC CONTACT SWITCH-PEDESTRIAN DOOR
C	MAGNETIC CONTACT SWITCH-VEHICLE DOOR
K	KEYPAD FOR ALARM SYSTEM
W	COMBINATION DETECTOR (MICROWAVE/PASSIVE INFRARED)
	PULL BOX-LETTER INDICATES TYPE OF PULL BOX (E-ELECTRICAL, T-TELEPHONE, R-RADIO)
(T)	PULL BOX (TRAFFIC-RATED)-LETTER INDICATES TYPE OF PULL BOX (E-ELECTRICAL, T-TELEPHONE, R-RADIO)
CHLF	COMBINATION HEAT, LIGHT, AND FAN UNIT
A / EE-2	SECTION/ELEVATION LETTER; SHEET NUMBER
1 / EE-2	DETAIL NUMBER; SHEET NUMBER

REMODEL WORK

SYMBOL	DESCRIPTION
	EXISTING FLUORESCENT FIXTURE-TO REMAIN
	EXISTING FLUORESCENT FIXTURE-REMOVE
	EXISTING INCANDESCENT FIXTURE-TO REMAIN
	EXISTING INCANDESCENT FIXTURE-REMOVE
	EXISTING OUTLET-TO REMAIN
	EXISTING RECEPTACLE OUTLET-TO REMAIN
	EXISTING RECEPTACLE OUTLET-REMOVE
—E---E—	EXISTING CONDUIT AND CONDUCTORS-TO REMAIN UNLESS OTHERWISE NOTED
—X---X—	EXISTING CONDUIT AND CONDUCTORS-REMOVE
S	EXISTING SWITCH-TO REMAIN
	EXISTING SWITCH-REMOVE
J	EXISTING JUNCTION BOX-TO REMAIN
	EXISTING JUNCTION BOX-REMOVE

GRAPHIC SYMBOLS FOR ELECTRICAL DIAGRAMS

SYMBOL	DESCRIPTION
	CIRCUIT BREAKER, SINGLE-POLE
	CIRCUIT BREAKER, DOUBLE-POLE
	CIRCUIT BREAKER, THREE-POLE
GFCI	CIRCUIT BREAKER, WITH GROUND FAULT CIRCUIT INTERRUPTER
	CIRCUIT BREAKER, SINGLE-POLE, SWITCHED NEUTRAL
	CONTACT, NORMALLY OPEN
	CONTACT, NORMALLY CLOSED
	CONTACT, NORMALLY CLOSED, TIME DELAY CLOSING ON DE-ENERGIZING
	CONTACT, NORMALLY OPEN, TIME DELAY OPENING ON DE-ENERGIZING
	CONTACT, NORMALLY OPEN, TIME DELAY CLOSING ON ENERGIZING
	CONTACT, NORMALLY CLOSED, TIME DELAY OPENING ON ENERGIZING
	CONTACT, SINGLE-POLE, DOUBLE-THROW
	OPERATING COIL
	LIQUID LEVEL ACTUATED SWITCH, NORMALLY CLOSED
	LIQUID LEVEL ACTUATED SWITCH, NORMALLY OPEN
	PRESSURE ACTUATED SWITCH, NORMALLY CLOSED
	PRESSURE ACTUATED SWITCH, NORMALLY OPEN
	FLOW ACTUATED SWITCH, NORMALLY CLOSED
	FLOW ACTUATED SWITCH, NORMALLY OPEN
	TEMPERATURE ACTUATED SWITCH, NORMALLY CLOSED
	TEMPERATURE ACTUATED SWITCH, NORMALLY OPEN
	LIMIT SWITCH, NORMALLY CLOSED
	LIMIT SWITCH, NORMALLY OPEN
	PUSHBUTTON SWITCH, NORMALLY CLOSED
	PUSHBUTTON SWITCH, NORMALLY OPEN
	SWITCH, SINGLE-POLE
	SWITCH, SINGLE-POLE, DOUBLE-THROW
	SWITCH, DOUBLE-POLE
	SWITCH, DOUBLE-POLE, DOUBLE-THROW
	SWITCH, SINGLE-POLE, 3-POSITION
	THERMAL OVERLOAD
	FUSE
	RESISTOR
	VARIABLE RESISTOR
	TRANSFORMER WINDING
	GROUNDING ELECTRODE
	ENCLOSURE BOND
A	PILOT LIGHT (A=AMBER, G=GREEN, R=RED)
G	GENERATOR
M	MOTOR
F	FAN MOTOR

GRAPHIC SYMBOLS FOR ELECTRICAL WIRING AND LAYOUT DIAGRAMS

E-2

REVISED BY	DATE REVISED
BE	12-22-15

HOMAYUN KOCHEKALI — BEHNAM EDALATI — CALCULATED-DESIGNED BY — CHECKED BY — FUNCTIONAL SUPERVISOR: BEHNAM EDALATI

STATE OF CALIFORNIA - DEPARTMENT OF TRANSPORTATION — Caltrans — ELECTRICAL

LAST REVISION 12-22-15 — DATE PLOTTED => 28-JAN-2016 — TIME PLOTTED => 12:32

Dist	COUNTY	ROUTE	POST MILES TOTAL PROJECT	SHEET No.	TOTAL SHEETS
04	SM	280	18.3,18.6	5	19

H. Kochekali 12-24-15
REGISTERED ELECTRICAL ENGINEER DATE

1-19-16
PLANS APPROVAL DATE

REGISTERED PROFESSIONAL ENGINEER Homayun Kochekali No. 17281 Exp. 6-30-16 ELECTRICAL STATE OF CALIFORNIA

THE STATE OF CALIFORNIA OR ITS OFFICERS OR AGENTS SHALL NOT BE RESPONSIBLE FOR THE ACCURACY OR COMPLETENESS OF SCANNED COPIES OF THIS PLAN SHEET.

ABBREVIATIONS:

El	ELEVATION
Ft	FEET
In	INCHES
LOEP	LOW EDGE OF PAVEMENT
PP	PUMPING PLANT
Ref	REFERENCE
SS	STAINLESS STEEL

NOTE:

POWER SOURCE DISTANCE:
SOUTH = 530 Ft
NORTH = 560 Ft

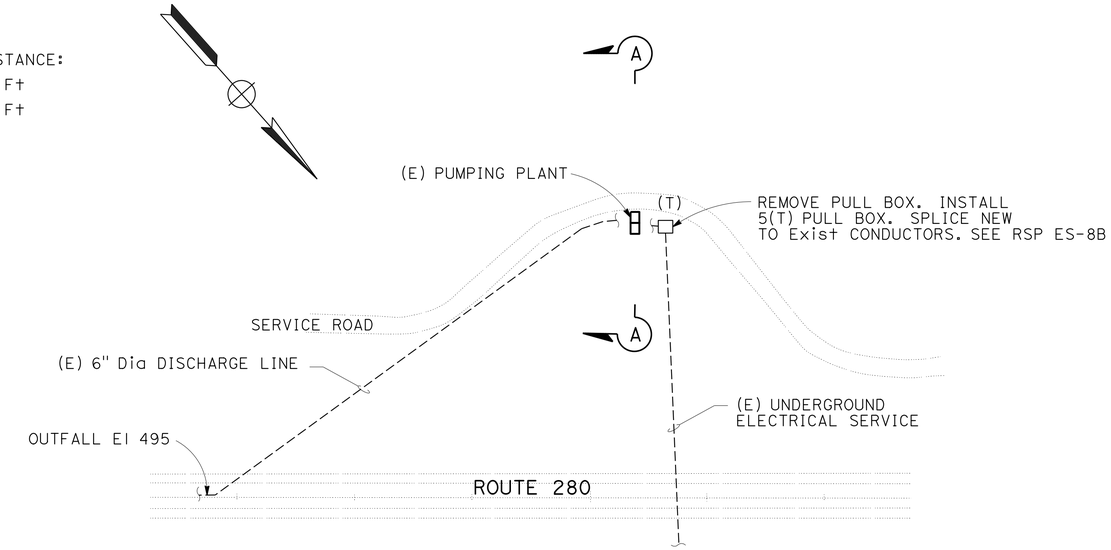

EXISTING SITE PLAN

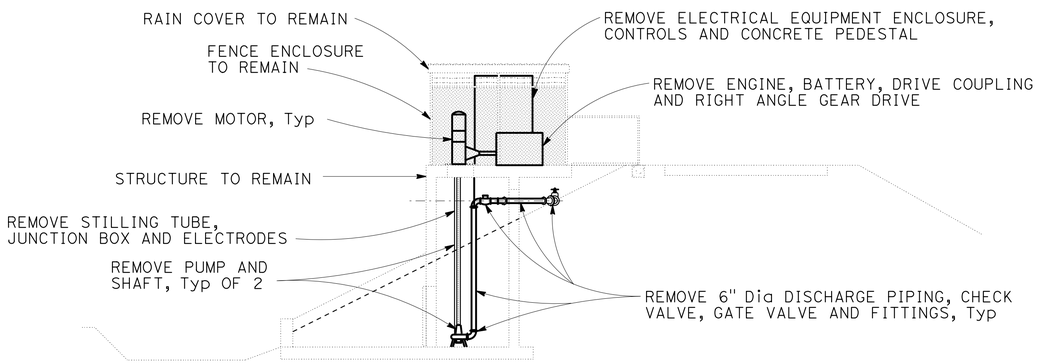

EXISTING SECTION A-A

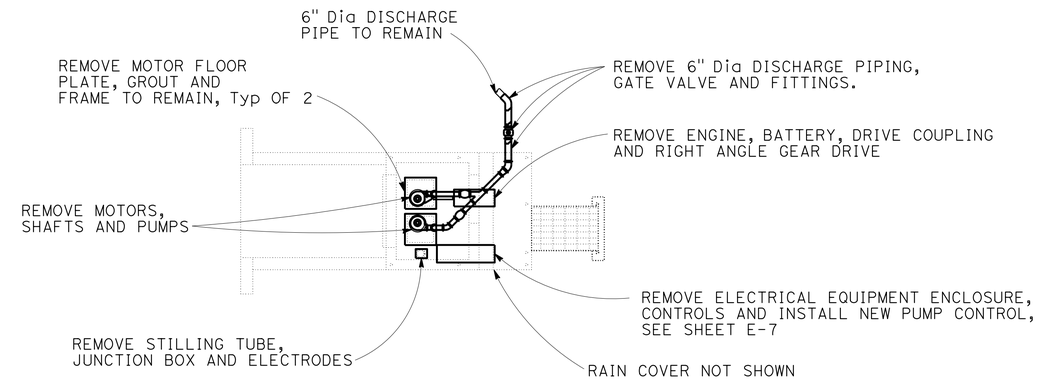

EXISTING PLAN

EQUIPMENT SCHEDULE

EQUIPMENT	PUMP PERFORMANCE		ELECTRICAL CHARACTERISTICS
	PUMPING RATE (Gal/Min)	TOTAL DYNAMIC HEAD (LF)	
DRAINAGE PUMPS No. 1 AND 2	300 500 750	45 40 30	240 V, 3 PHASE, 60 Hz 900 RPM Min (SYNC), 10 HP 1200 RPM Max

RAINFALL DATA

STORM TIME (Min)	R_{50} (In)
5	0.372
10	0.533
15	0.645
30	0.895
60	1.270

STORAGE: 1300 CUBIC FEET IN RETENTION BASIN FOR UNDERGROUND ELECTRICAL CONDUITS, SEE "ELECTRICAL PLANS"
DRAINAGE AREA: 0.83 ACRES

MODIFY PUMP PLANT
(NORTH LARKSPUR PUMPING PLANT)
NO SCALE

E-3

REVISED BY	DATE REVISED
BE	12-22-15

HOMAYUN KOCHEKALI
BEHNAM EDALATI
CALCULATED-DESIGNED BY
CHECKED BY
FUNCTIONAL SUPERVISOR
BEHNAM EDALATI

STATE OF CALIFORNIA - DEPARTMENT OF TRANSPORTATION
Caltrans
ELECTRICAL

LAST REVISION 12-22-15
DATE PLOTTED => 28-JAN-2016
TIME PLOTTED => 12:32

Dist	COUNTY	ROUTE	POST MILES TOTAL PROJECT	SHEET No.	TOTAL SHEETS
04	SM	280	18.3,18.6	6	19

REGISTERED ELECTRICAL ENGINEER 12-24-15 DATE

1-19-16
PLANS APPROVAL DATE

REGISTERED PROFESSIONAL ENGINEER Homayun Kochekali No. 17281 Exp. 6-30-16 ELECTRICAL STATE OF CALIFORNIA

THE STATE OF CALIFORNIA OR ITS OFFICERS OR AGENTS SHALL NOT BE RESPONSIBLE FOR THE ACCURACY OR COMPLETENESS OF SCANNED COPIES OF THIS PLAN SHEET.

NOTES:

1. SUPPORT PUMP MOTOR CABLES WITH STAINLESS STEEL GRIPS. SEE SHEET E-13 FOR DETAILS.
2. PUMPS SHALL BE INSTALLED WITH EPOXY OR RESIN-CAPSULE ANCHORS BOLTS PER MANUFACTURER'S RECOMMENDATION. THE SIZE AND NUMBER OF FASTENERS SHALL MATCH MANUFACTURER'S RECOMMENDATION. ALL FASTENERS AND APPURTENANCES SHALL BE TYPE 304 STAINLESS STEEL. PUMP SETTING DETAILS SHALL BE IN ACCORDANCE WITH PUMP MANUFACTURER INSTALLATION REQUIREMENTS.
3. PROVISION SHOULD BE MADE BY THE CONTRACTOR IN DEVISING A FRAME (L-BRACKETS) FOR FITTING GRATINGS. GRATINGS SHALL BE SWAGED CONSTRUCTION WITH 1" x 3/16 BEARING BARS SPACED AT 7/16 INCHES ON CENTER AND SWAGED CROSS BARS SPACED AT 2 INCHES ON CENTER. MATERIAL SHALL BE ALUMINUM WITH SAFE UNIFORM LOAD OF 300 LBS/SQFT FLUSH TO THE TOP SURFACE TO PREVENT TRIPPING HAZARD. THE CONTRACTOR SHALL SUBMIT HIS COMPLETE DESIGN FOR APPROVAL.
4. THE BROKEN EXISTING PULL BOX IS TO BE REPLACED BY No. 5(T) SPLICE NEW TO Exist SERVICE CONDUCTOR. SEE SHEET ES-8B FOR SPLICING DETAIL.
5. FOR INDICATING LIGHT DETAIL, SEE 1, 2, E-15. MOUNT INDICATING LIGHTS SO THEY FACE THE ACCESS ROAD.
6. EXISTING 8" DIAMETER STILLING TUBE HOLE MAY BE USED TO ROUTE MOTOR POWER AND CONTROL CABLES INTO CONTROL CABINET. SEE ALSO SHEET E-13, NOTE 4, FOR DETAILS. IF NOT IN USE, PATCH IT.

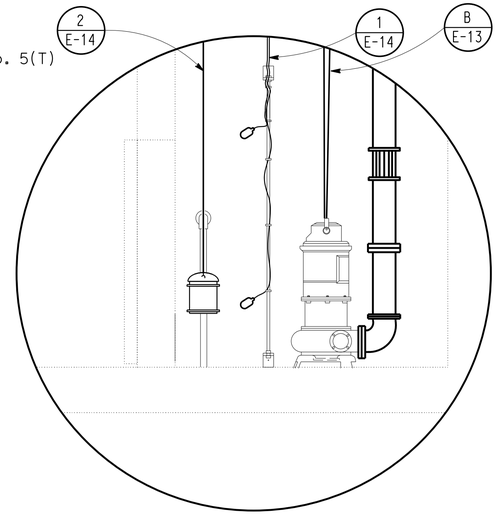

DETAIL 1

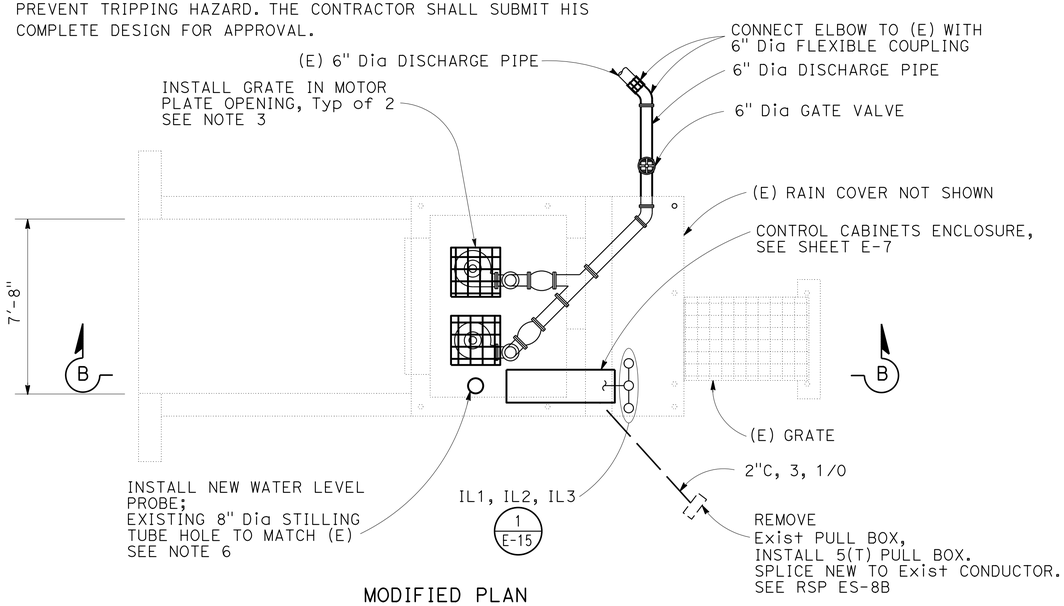

MODIFIED PLAN

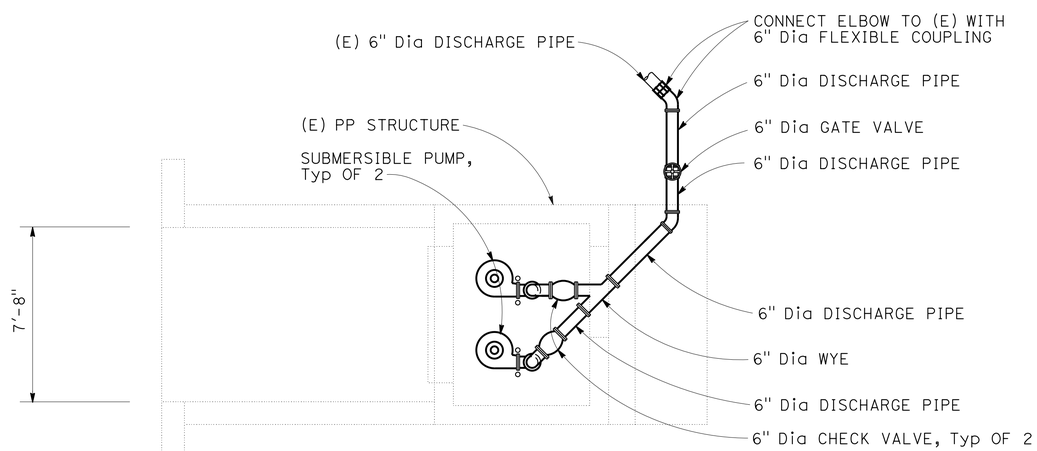

SECTION C-C

SUMP PUMP PLAN

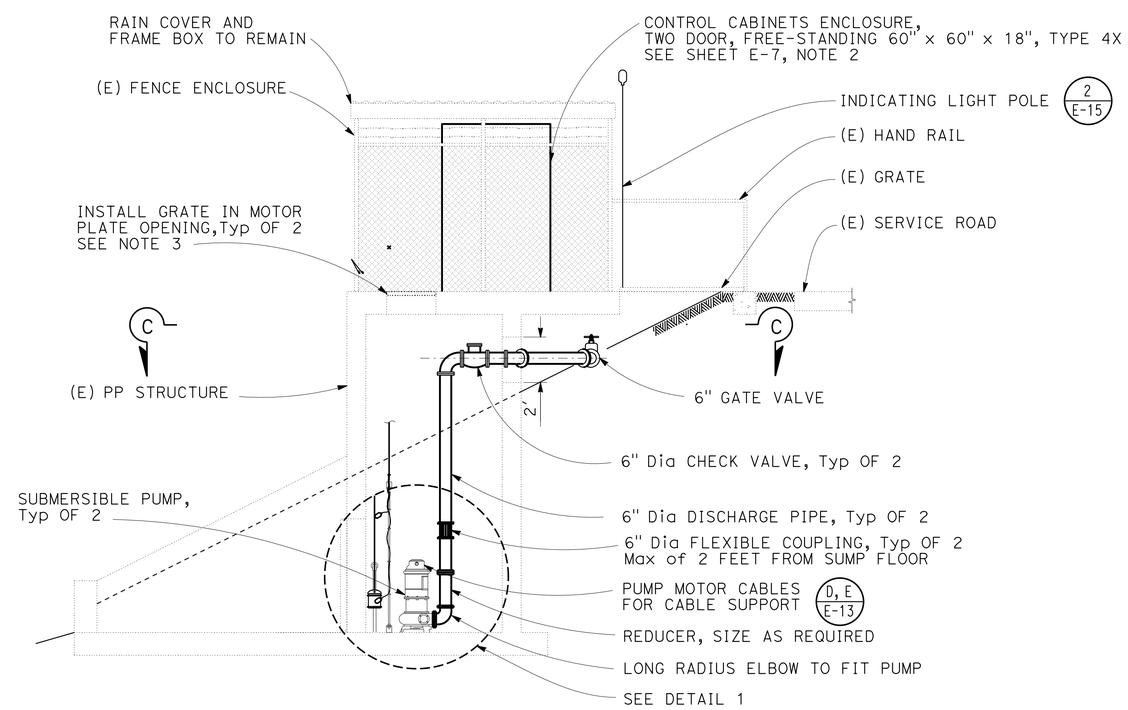

MODIFIED SECTION B-B

MODIFY PUMP PLANT
(NORTH LARKSPUR PUMPING PLANT)

NO SCALE

E-4

STATE OF CALIFORNIA - DEPARTMENT OF TRANSPORTATION
Caltrans
ELECTRICAL

FUNCTIONAL SUPERVISOR: BEHNAM EDALATI
CALCULATED-DESIGNED BY: HOMAYUN KOCHEKALI
CHECKED BY: BEHNAM EDALATI
REVISED BY: BE
DATE REVISED: 8-28-15

LAST REVISION 08-28-15 | DATE PLOTTED => 28-JAN-2016 | TIME PLOTTED => 12:32

Dist	COUNTY	ROUTE	POST MILES TOTAL PROJECT	SHEET No.	TOTAL SHEETS
04	SM	280	18.3,18.6	7	19

REGISTERED ELECTRICAL ENGINEER 12-24-15 DATE

1-19-16
PLANS APPROVAL DATE

REGISTERED PROFESSIONAL ENGINEER Homayun Kochekali No. 17281 Exp. 6-30-16 ELECTRICAL STATE OF CALIFORNIA

THE STATE OF CALIFORNIA OR ITS OFFICERS OR AGENTS SHALL NOT BE RESPONSIBLE FOR THE ACCURACY OR COMPLETENESS OF SCANNED COPIES OF THIS PLAN SHEET.

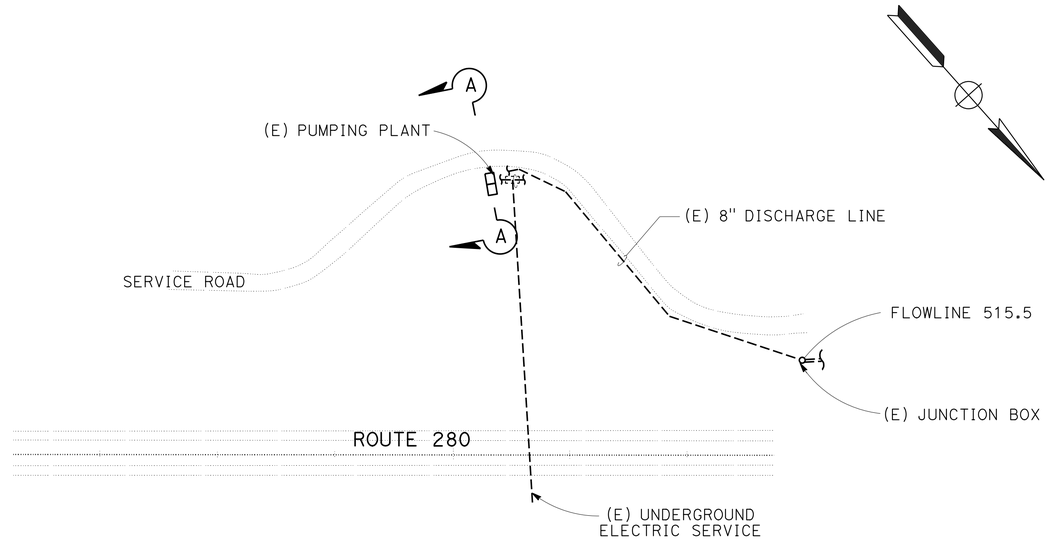

EXISTING SITE PLAN

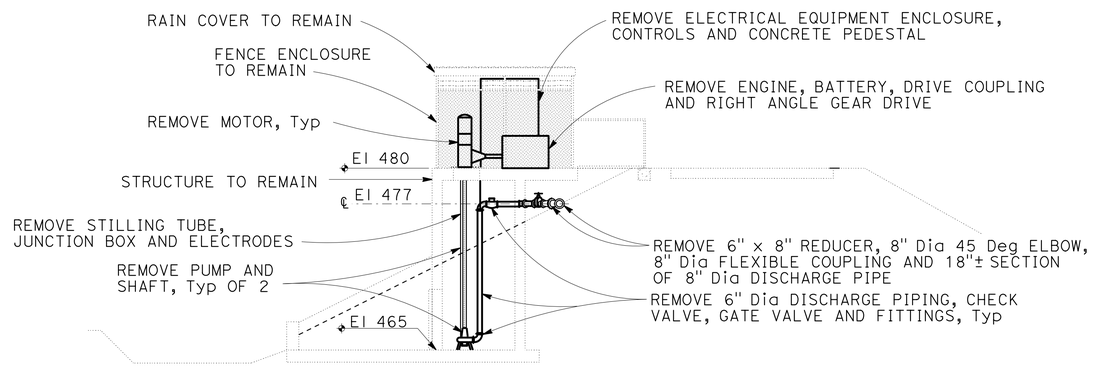

EXISTING SECTION A-A

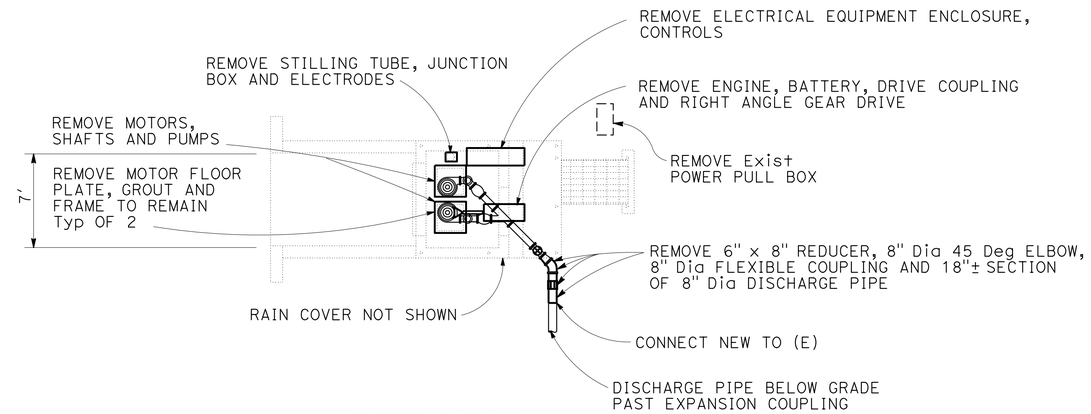

EXISTING PLAN

EQUIPMENT SCHEDULE

EQUIPMENT	PUMP PERFORMANCE		ELECTRICAL CHARACTERISTICS
	PUMPING RATE (Gal/Min)	TOTAL DYNAMIC HEAD (LF)	
DRAINAGE PUMPS No. 1 AND 2	200 500 750	59 50 41	240 V, 3 PHASE, 60 Hz 900 RPM Min (SYNC), 15 HP 1200 RPM Max

RAINFALL DATA

STORM TIME (Min)	R_{50} (In)
5	0.316
10	0.448
15	0.550
30	0.782
60	1.110

STORAGE: 174,240 CUBIC FEET IN RETENTION BASIN
FOR UNDERGROUND ELECTRICAL CONDUITS, SEE "ELECTRICAL PLANS"
DRAINAGE AREA: 2.35 ACRES

MODIFY PUMP PLANT
(SOUTH LARKSPUR PUMPING PLANT)

NO SCALE

E-5

STATE OF CALIFORNIA - DEPARTMENT OF TRANSPORTATION
Caltrans
ELECTRICAL

FUNCTIONAL SUPERVISOR: BEHNAM EDALATI
CALCULATED-DESIGNED BY: HOMAYUN KOCHEKALI
CHECKED BY: BEHNAM EDALATI
REVISED BY: BE
DATE REVISED: 8-18-15

LAST REVISION 08-18-15 | DATE PLOTTED => 28-JAN-2016 | TIME PLOTTED => 12:32

Dist	COUNTY	ROUTE	POST MILES TOTAL PROJECT	SHEET No.	TOTAL SHEETS
04	SM	280	18.3,18.6	8	19

H. Kochekali 12-24-15
REGISTERED ELECTRICAL ENGINEER DATE

1-19-16
PLANS APPROVAL DATE

REGISTERED PROFESSIONAL ENGINEER Homayun Kochekali No. 17281 Exp. 6-30-16 ELECTRICAL STATE OF CALIFORNIA

THE STATE OF CALIFORNIA OR ITS OFFICERS OR AGENTS SHALL NOT BE RESPONSIBLE FOR THE ACCURACY OR COMPLETENESS OF SCANNED COPIES OF THIS PLAN SHEET.

NOTES:

1. SUPPORT PUMP MOTOR CABLES WITH STAINLESS STEEL GRIPS. SEE SHEET E-13 FOR DETAILS.
2. PUMPS SHALL BE INSTALLED WITH CAST-IN-PLACE STUDS, EPOXY CONCRETE EXPANSION ANCHOR BOLTS, OR PER MANUFACTURER'S RECOMMENDATION. THE SIZE AND NUMBER OF FASTENERS SHALL MATCH MANUFACTURER'S RECOMMENDATION. ALL FASTENERS AND APPURTENANCES SHALL BE TYPE 304 STAINLESS STEEL. PUMP SETTING DETAILS SHALL BE IN ACCORDANCE WITH PUMP MANUFACTURER INSTALLATION REQUIREMENTS.
3. PROVISION SHOULD BE MADE BY THE CONTRACTOR IN DEVISING A FRAME (L-BRACKETS) FOR FITTING GRATINGS. GRATINGS SHALL BE SWAGED CONSTRUCTION WITH 1" x 3/16 BEARING BARS SPACED AT 7/16 INCHES ON CENTER AND SWAGED CROSS BARS SPACED AT 2 INCHES ON CENTER. MATERIAL SHALL BE ALUMINUM WITH SAFE UNIFORM LOAD OF 300 LBS/SQFT FLUSH TO THE TOP SURFACE TO PREVENT TRIPPING HAZARD. THE CONTRACTOR SHALL SUBMIT HIS COMPLETE DESIGN FOR APPROVAL.
4. SPLICE NEW CONDUCTOR TO EXISTING SERVICE CONDUCTOR. SEE SHEET ES-13 FOR SPLICING DETAIL.
5. FOR INDICATING LIGHT DETAIL, SEE DETAILS 1 AND 2 ON SHEET E-15. MOUNT INDICATING LIGHTS SO THEY FACE THE ACCESS ROAD.
6. EXISTING 8" DIAMETER STILLING TUBE HOLE MAY BE USED TO ROUTE MOTOR POWER AND CONTROL CABLES INTO CONTROL CABINET. SEE SHEET E-13 FOR DETAILS. IF NOT IN USE, PATCH IT. SEE ALSO NOTE 4 ON SHEET E-13.

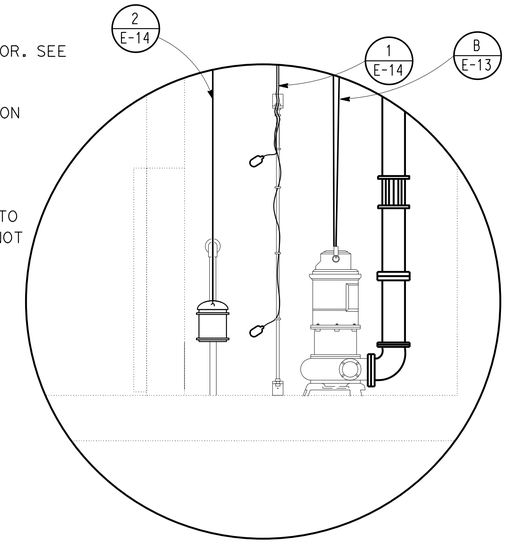

DETAIL 1

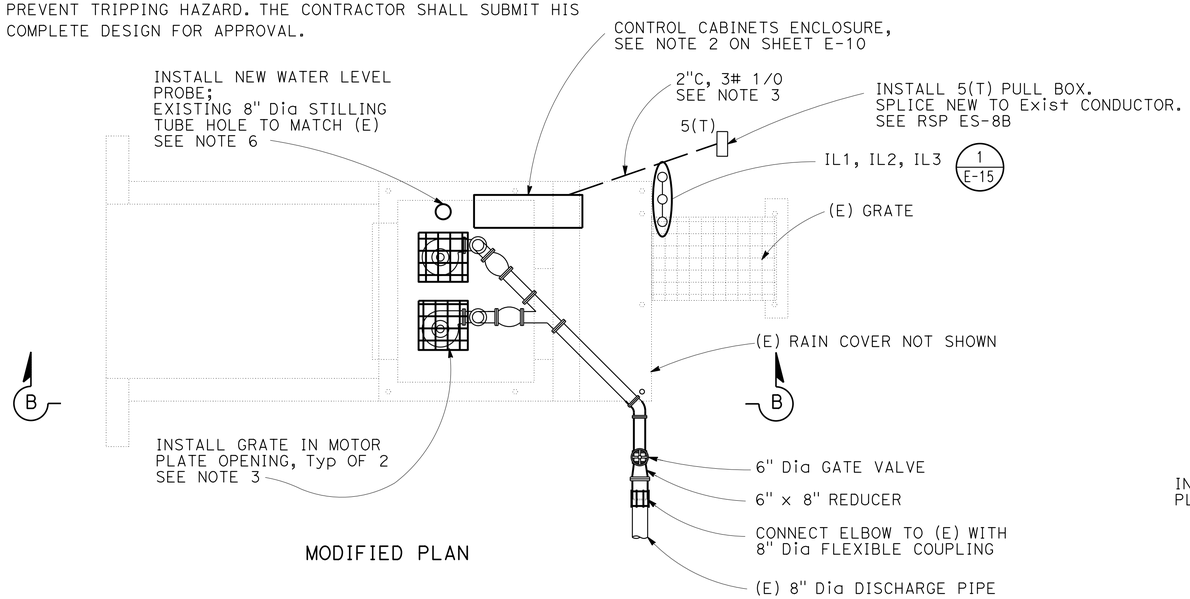

MODIFIED PLAN

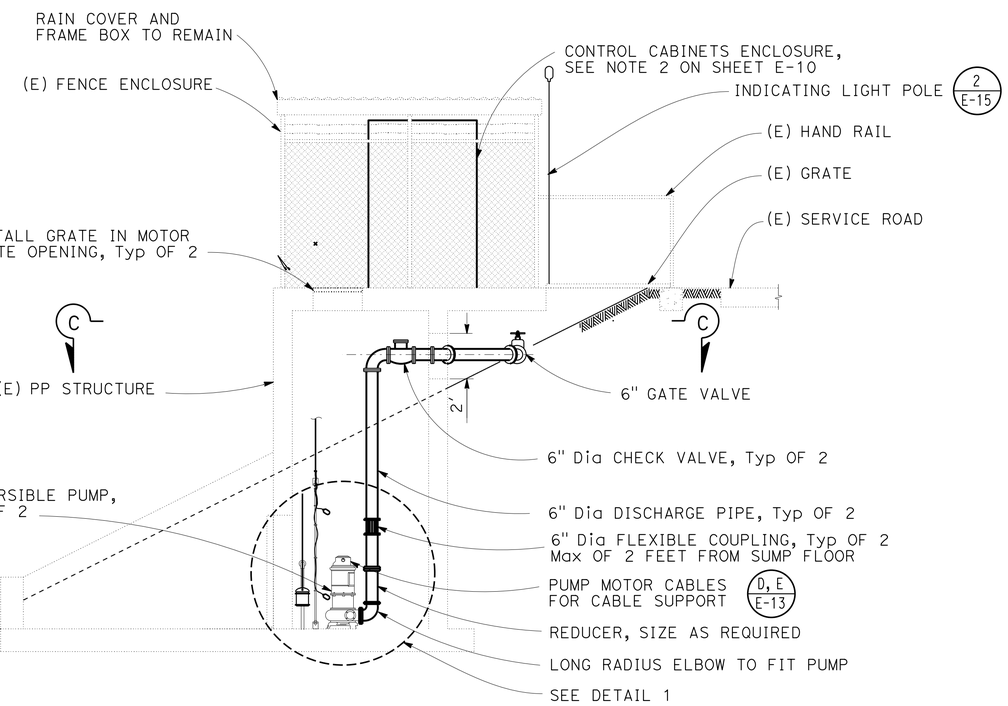

MODIFIED SECTION B-B

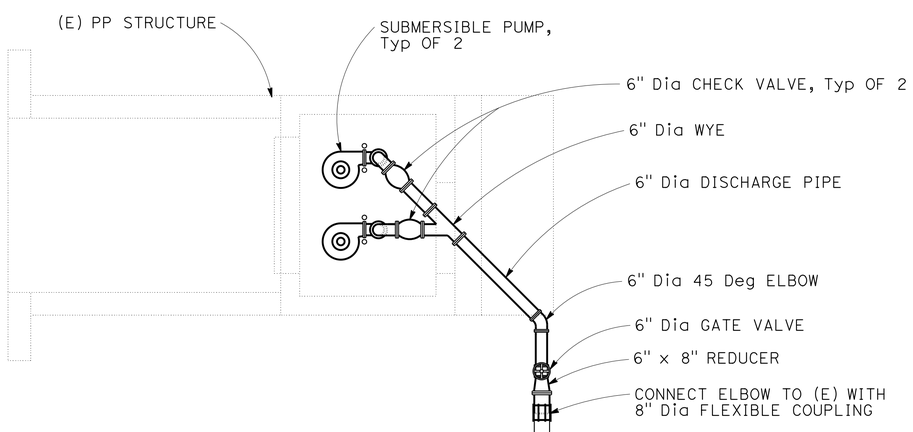

SECTION C-C

SUMP PUMP PLAN

MODIFY PUMP PLANT
(SOUTH LARKSPUR PUMPING PLANT)

NO SCALE

E-6

REVISED BY	DATE REVISED
BE	8-18-15

HOMAYUN KOCHEKALI — CALCULATED-DESIGNED BY
BEHNAM EDALATI — CHECKED BY
BEHNAM EDALATI — FUNCTIONAL SUPERVISOR

STATE OF CALIFORNIA - DEPARTMENT OF TRANSPORTATION
Caltrans
ELECTRICAL

LAST REVISION 08-28-15 | DATE PLOTTED => 28-JAN-2016 | TIME PLOTTED => 12:32

Dist	COUNTY	ROUTE	POST MILES TOTAL PROJECT	SHEET No.	TOTAL SHEETS
04	SM	280	18.3,18.6	9	19

REGISTERED ELECTRICAL ENGINEER 12-24-15 DATE

1-19-16
PLANS APPROVAL DATE

REGISTERED PROFESSIONAL ENGINEER Homayun Kochekali No. 17281 Exp. 6-30-16 ELECTRICAL STATE OF CALIFORNIA

THE STATE OF CALIFORNIA OR ITS OFFICERS OR AGENTS SHALL NOT BE RESPONSIBLE FOR THE ACCURACY OR COMPLETENESS OF SCANNED COPIES OF THIS PLAN SHEET.

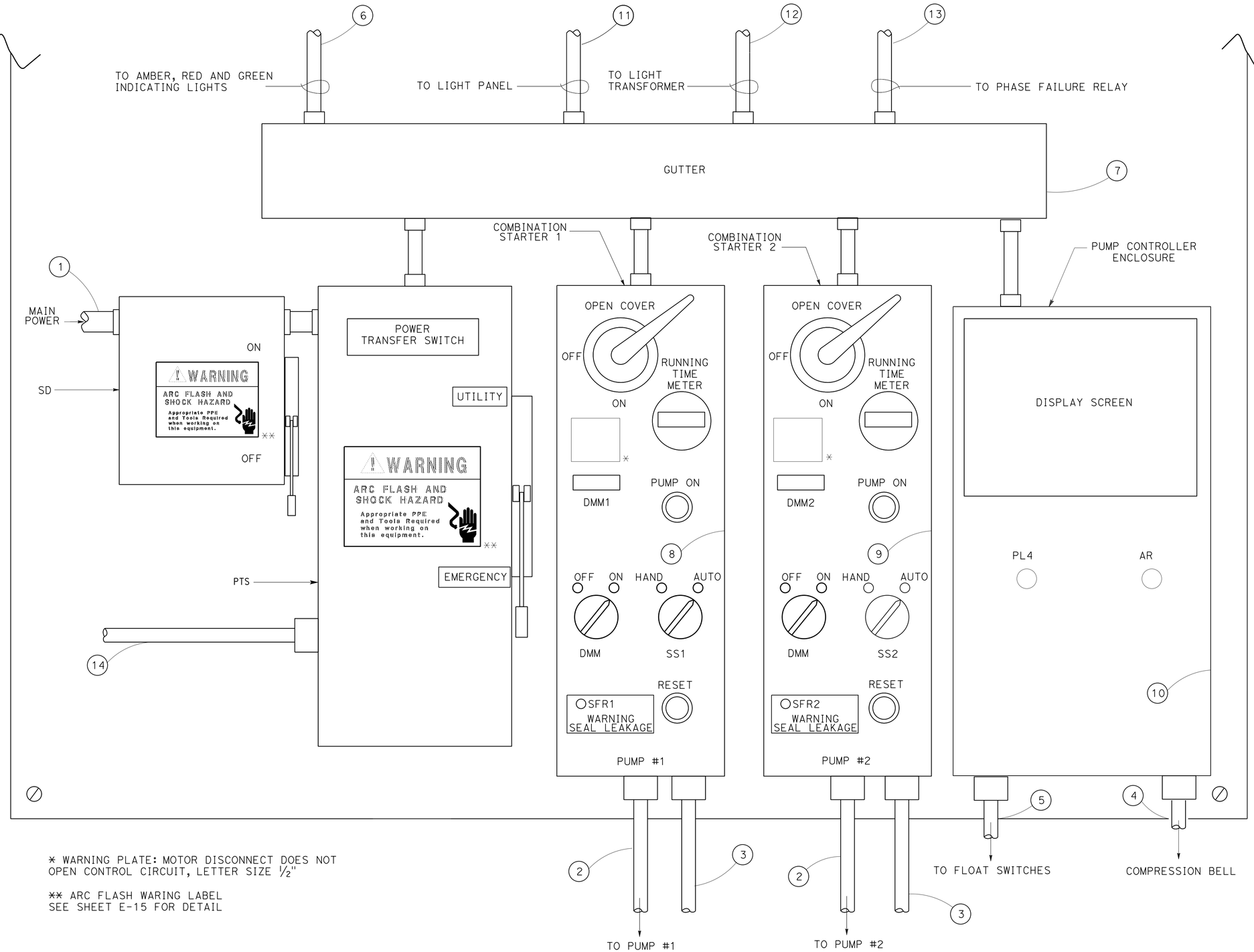

* WARNING PLATE: MOTOR DISCONNECT DOES NOT OPEN CONTROL CIRCUIT, LETTER SIZE ½"

** ARC FLASH WARING LABEL SEE SHEET E-15 FOR DETAIL

NOTES:

1. NAMEPLATE SHALL BE THE IDENTIFYING NAME OR SYMBOL FOR THE DEVICE OR COMPONENT. FOR EXAMPLE, NAMEPLATE FOR PUMP #1 ON THE INTERIOR MOUNTING PANEL SHALL BE PUMP #1.
2. INSTALL TWO DOOR, FREE-STANDING, 60" x 60" x 18", TYPE NEMA 4X. NAME IT CONTROL CABINETS ENCLOSURE.

LEGEND:

1. 2"C, 3#1/0
2. 2"C, 3#8, 1#8(G). FOR POWER CABLE SUPPORT REFER TO DETAIL E, SHEET E-13
3. 1"C, PUMP CONTROL CABLES
4. POLYETHYLENE TUBE (AIR TUBE). FOR DETAIL REFER TO DETAIL 2, SHEET E-14
5. 1"C, 2 FLOAT SWITCH CABLES, REFER TO DETAIL 1, SHEET E-14
6. 1"C, 4#12, 1#12(G)
7. GUTTER, 5" x 5" x 4'
8. IN ADDITION TO ST1, INSTALL CS1, DMM1 CURRENT TRNSFORMERS AND FUSES INSIDE THIS ENCLOSURE
9. IN ADDITION TO ST2, INSTALL CS2, DMM2 CURRENT TRANSFORMERS AND FUSES INSIDE THIS ENCLOSURE
10. ALL THE FOLLOWING COMPONENTS MUST BE MOUNTED INSIDE THE CONTROL PANEL CR1, CR2, CR3, CR4, CR5, TDR1, TDR2, POWER SUPPLY, SOLENOID VALVE "SV," AIR COMPRESSOR, FLOATS TRANSCEIVER AND PRESSURE TRANSDUCER
11. 1"C, 2#10, 8#12, 1#2(G) TO LIGHT PANEL
12. 1"C, 4#10, 1#10(G) TO GROUND REBAR
13. 1"C, 5#12 TO PHASE FAILURE RELAY
14. 2"C, 3#1/0 TO SPR MOUNTED AT THE SIDE OF CONTROL CABINETS ENCLOSURE OVERLOOKING EXIT GATE

CONTROL STATION DETAIL
(NORTH LARKSPUR PUMPING PLANT)

NO SCALE

E-7

REVISED BY	DATE REVISED
BE	8-28-15

CALCULATED-DESIGNED BY: HOMAYUN KOCHEKALI
CHECKED BY: BEHNAM EDALATI
FUNCTIONAL SUPERVISOR: BEHNAM EDALATI

STATE OF CALIFORNIA - DEPARTMENT OF TRANSPORTATION
Caltrans
ELECTRICAL

LAST REVISION 08-28-15 | DATE PLOTTED => 28-JAN-2016 | TIME PLOTTED => 12:32

Dist	COUNTY	ROUTE	POST MILES TOTAL PROJECT	SHEET No.	TOTAL SHEETS
04	SM	280	18.3,18.6	10	19

REGISTERED ELECTRICAL ENGINEER DATE 12-24-15

1-19-16
PLANS APPROVAL DATE

REGISTERED PROFESSIONAL ENGINEER Homayun Kochekali No. 17281 Exp. 6-30-16 ELECTRICAL STATE OF CALIFORNIA

THE STATE OF CALIFORNIA OR ITS OFFICERS OR AGENTS SHALL NOT BE RESPONSIBLE FOR THE ACCURACY OR COMPLETENESS OF SCANNED COPIES OF THIS PLAN SHEET.

LEGEND:

1. POWER FOR DMM1 AND DMM2
2. CONTROL POWER ON
3. HIGH LEVEL/ COMMON ALARM
4. HIGH LEVEL/ COMMON ALARM (RED) INDICATING LIGHT
5. PUMP No. 1 STARTER
6. PUMP No. 2 STARTER
7. PUMP No. 1 RUN
8. PUMP No. 2 RUN
9. PUMP No. 1 RUN TIME
10. PUMP No. 1 RUN PILOT LIGHT
11. PUMP No. 2 RUN TIME
12. PUMP No. 2 RUN PILOT LIGHT
13. PROGRAM PUMP CONTROLLER DIGITAL OUTPUT FOR COMMON ALARM SIGNAL FROM ALARM INPUTS

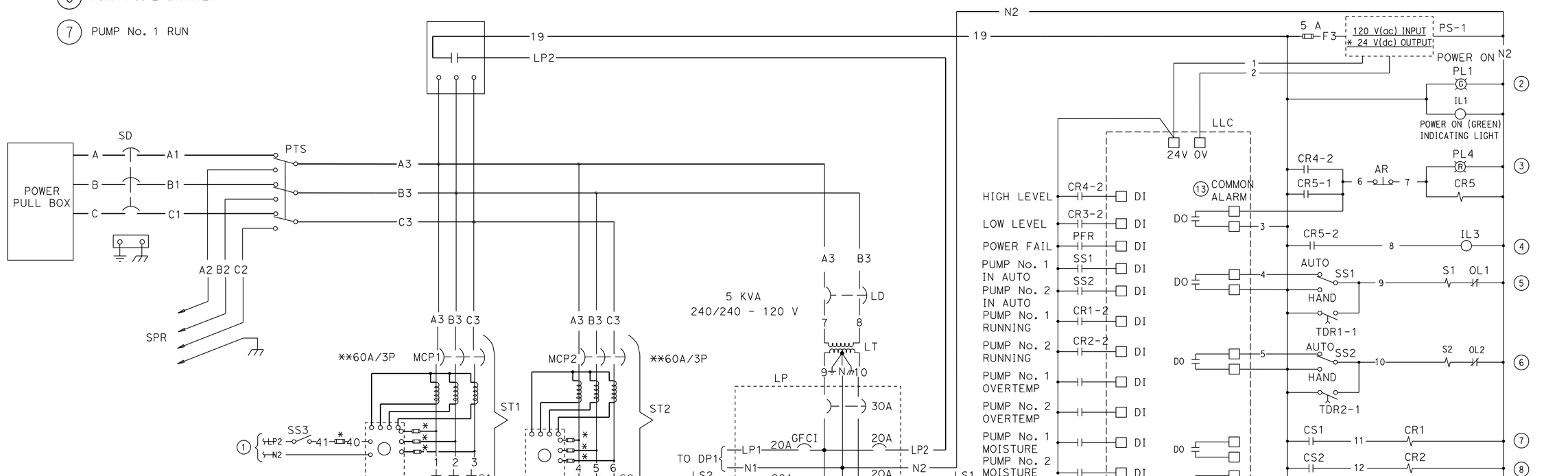

* RATING OF FUSE MUST BE AS REQUIRED BY THE MANUFACTURER OF THE DIGITAL METER

** RATING OF MCP TO BE AS REQUIRED BY THE PUMP AND MOTOR MANUFACTURER

CONTROL STATION SCHEMATIC
(NORTH LARKSPUR PUMPING PLANT)

E-8

REVISED BY	DATE REVISED
BE	8-28-15

CALCULATED- HOMAYUN KOCHEKALI
DESIGNED BY BEHNAM EDALATI
CHECKED BY
FUNCTIONAL SUPERVISOR BEHNAM EDALATI

STATE OF CALIFORNIA - DEPARTMENT OF TRANSPORTATION
Caltrans
ELECTRICAL

LAST REVISION 08-28-15
DATE PLOTTED => 28-JAN-2016
TIME PLOTTED => 12:32

Dist	COUNTY	ROUTE	POST MILES TOTAL PROJECT	SHEET No.	TOTAL SHEETS
04	SM	280	18.3,18.6	11	19

H. Kochekali 12-24-15
REGISTERED ELECTRICAL ENGINEER DATE

1-19-16
PLANS APPROVAL DATE

REGISTERED PROFESSIONAL ENGINEER
Homayun Kochekali
No. 17281
Exp. 6-30-16
ELECTRICAL
STATE OF CALIFORNIA

THE STATE OF CALIFORNIA OR ITS OFFICERS OR AGENTS SHALL NOT BE RESPONSIBLE FOR THE ACCURACY OR COMPLETENESS OF SCANNED COPIES OF THIS PLAN SHEET.

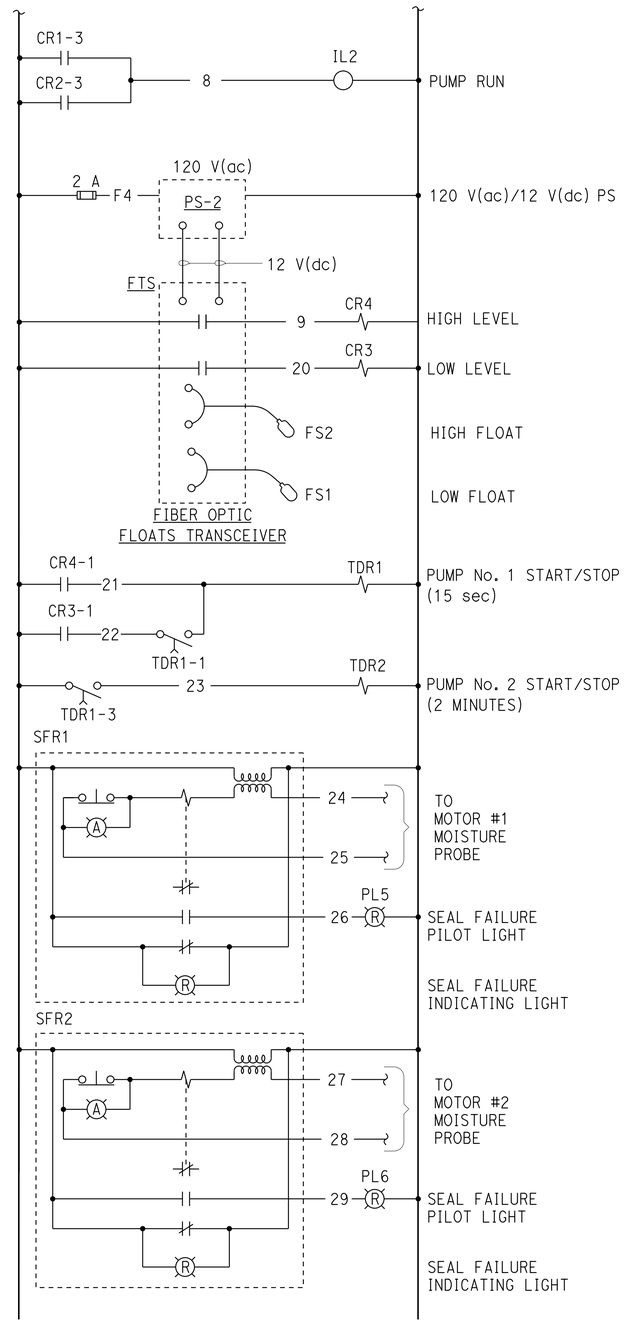

CONTROL SCHEMATIC DIAGRAM
CONTINUATION FROM SHEET E-8

CONTROL STATION SCHEMATIC
(NORTH LARKSPUR PUMPING PLANT)

E-9

STATE OF CALIFORNIA - DEPARTMENT OF TRANSPORTATION
Caltrans
ELECTRICAL

FUNCTIONAL SUPERVISOR: BEHNAM EDALATI
CALCULATED-DESIGNED BY: HOMAYUN KOCHEKALI
CHECKED BY: BEHNAM EDALATI
REVISED BY: BE
DATE REVISED: 8-28-15

LAST REVISION: DATE PLOTTED => 28-JAN-2016
08-28-15 TIME PLOTTED => 12:32

BORDER LAST REVISED 7/2/2010
USERNAME => s131732
DGN FILE => 0415000406ua009.dgn
RELATIVE BORDER SCALE IS IN INCHES 0 1 2 3
UNIT 0974
PROJECT NUMBER & PHASE 04150004061

Dist	COUNTY	ROUTE	POST MILES TOTAL PROJECT	SHEET No.	TOTAL SHEETS
04	SM	280	18.3,18.6	12	19

REGISTERED ELECTRICAL ENGINEER 12-24-15 DATE

1-19-16
PLANS APPROVAL DATE

REGISTERED PROFESSIONAL ENGINEER Homayun Kochekali No. 17281 Exp. 6-30-16 ELECTRICAL STATE OF CALIFORNIA

THE STATE OF CALIFORNIA OR ITS OFFICERS OR AGENTS SHALL NOT BE RESPONSIBLE FOR THE ACCURACY OR COMPLETENESS OF SCANNED COPIES OF THIS PLAN SHEET.

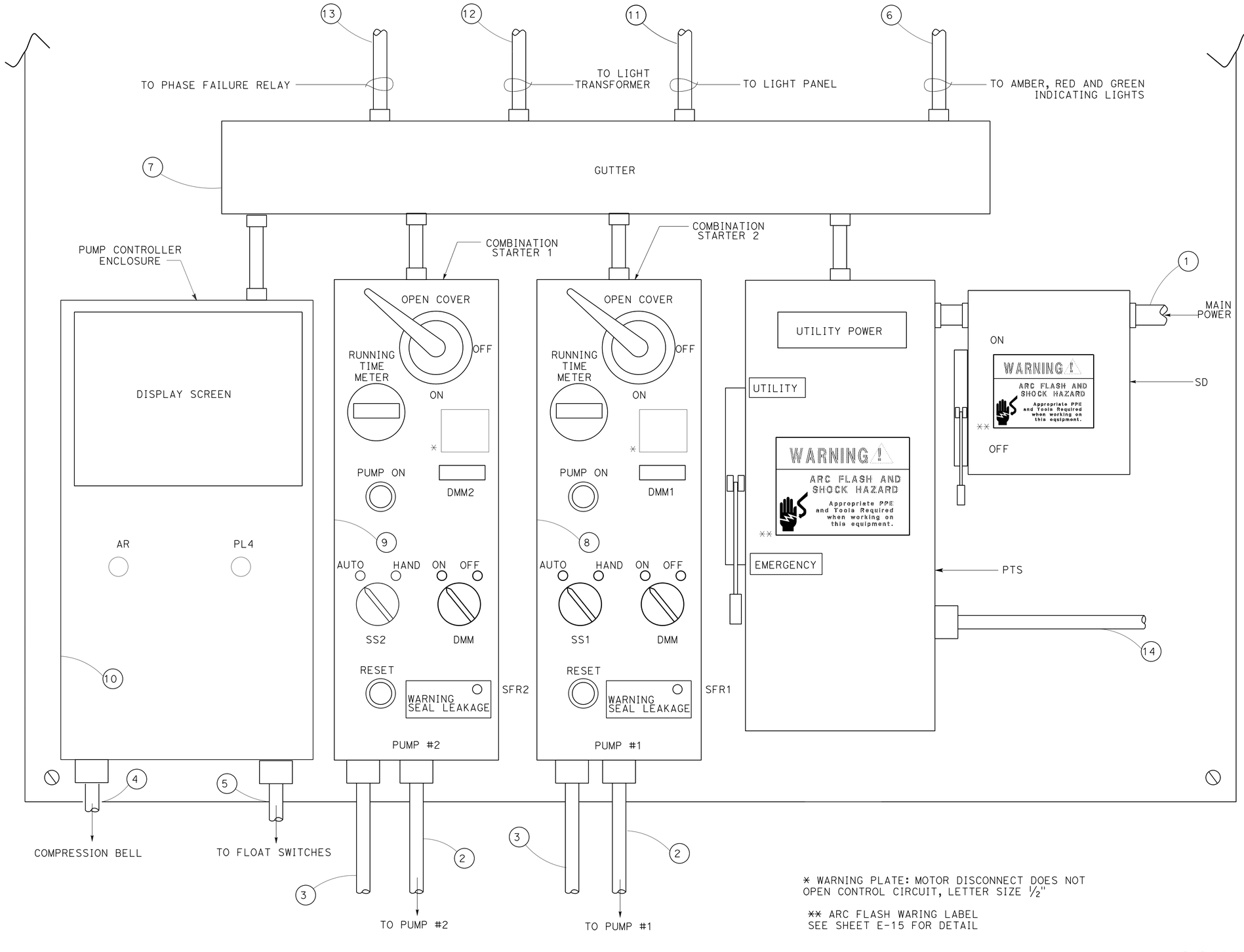

* WARNING PLATE: MOTOR DISCONNECT DOES NOT OPEN CONTROL CIRCUIT, LETTER SIZE ½"

** ARC FLASH WARING LABEL SEE SHEET E-15 FOR DETAIL

NOTES:

1. NAMEPLATE SHALL BE THE IDENTIFYING NAME OR SYMBOL FOR THE DEVICE OR COMPONENT. FOR EXAMPLE, NAMEPLATE FOR PUMP #1 ON THE INTERIOR MOUNTING PANEL SHALL BE PUMP #1.
2. INSTALL TWO DOOR, FREE-STANDING, 60" x 60" x 18", TYPE NEMA 4X. NAME IT CONTROL CABINETS ENCLOSURE.

LEGEND:

(1) 2"C, 3#1/0

(2) 2"C, 3#8,, 1#8(G). FOR POWER CABLE SUPPORT REFER TO DETAIL E, SHEET E-13

(3) 1"C, PUMP CONTROL CABLES

(4) POLYETHYLENE TUBE (AIR TUBE). FOR DETAIL REFER TO DETAIL 2, SHEET E-14

(5) 1"C, 2 FLOAT SWITCH CABLES, REFER TO DETAIL 1, SHEET E-14

(6) 1"C, 4#12, 1#12(G)

(7) GUTTER, 5" x 5" x 4'

(8) IN ADDITION TO ST1, INSTALL CS1, DMM1 CURRENT TRNSFORMERS AND FUSES INSIDE THIS ENCLOSURE

(9) IN ADDITION TO ST2, INSTALL CS2, DMM2 CURRENT TRANSFORMERS AND FUSES INSIDE THIS ENCLOSURE

(10) ALL THE FOLLOWING COMPONENTS MUST BE MOUNTED INSIDE THE CONTROL PANEL CR1, CR2, CR3, CR4, CR5, TDR1, TDR2, POWER SUPPLY, SOLENOID VALVE "SV," AIR COMPRESSOR, FLOATS TRANSCEIVER AND PRESSURE TRANSDUCER

(11) 1"C, 2#10, 8#12, 1#2(G) TO LIGHT PANEL

(12) 1"C, 2#10, 1#10(G) TO GROUND REBAR

(13) 1"C, 5#12 TO PHASE FAILURE RELAY

(14) 2"C, 3#1/0 TO SPR MOUNTED AT THE SIDE OF CONTROL CABINETS ENCLOSURE OVERLOOKING EXIT GATE

CONTROL STATION DETAIL
(SOUTH LARKSPUR PUMPING PLANT)

NO SCALE

E-10

STATE OF CALIFORNIA - DEPARTMENT OF TRANSPORTATION
Caltrans
ELECTRICAL

FUNCTIONAL SUPERVISOR: BEHNAM EDALATI
CALCULATED-DESIGNED BY: HOMAYUN KOCHEKALI
CHECKED BY: BEHNAM EDALATI
REVISED BY: BE
DATE REVISED: 8-28-15

LAST REVISION 08-28-15
DATE PLOTTED => 28-JAN-2016
TIME PLOTTED => 12:32

Dist	COUNTY	ROUTE	POST MILES TOTAL PROJECT	SHEET No.	TOTAL SHEETS
04	SM	280	18.3,18.6	13	19

H. Kochekali 12-24-15
REGISTERED ELECTRICAL ENGINEER DATE

1-19-16
PLANS APPROVAL DATE

REGISTERED PROFESSIONAL ENGINEER Homayun Kochekali No. 17281 Exp. 6-30-16 ELECTRICAL STATE OF CALIFORNIA

THE STATE OF CALIFORNIA OR ITS OFFICERS OR AGENTS SHALL NOT BE RESPONSIBLE FOR THE ACCURACY OR COMPLETENESS OF SCANNED COPIES OF THIS PLAN SHEET.

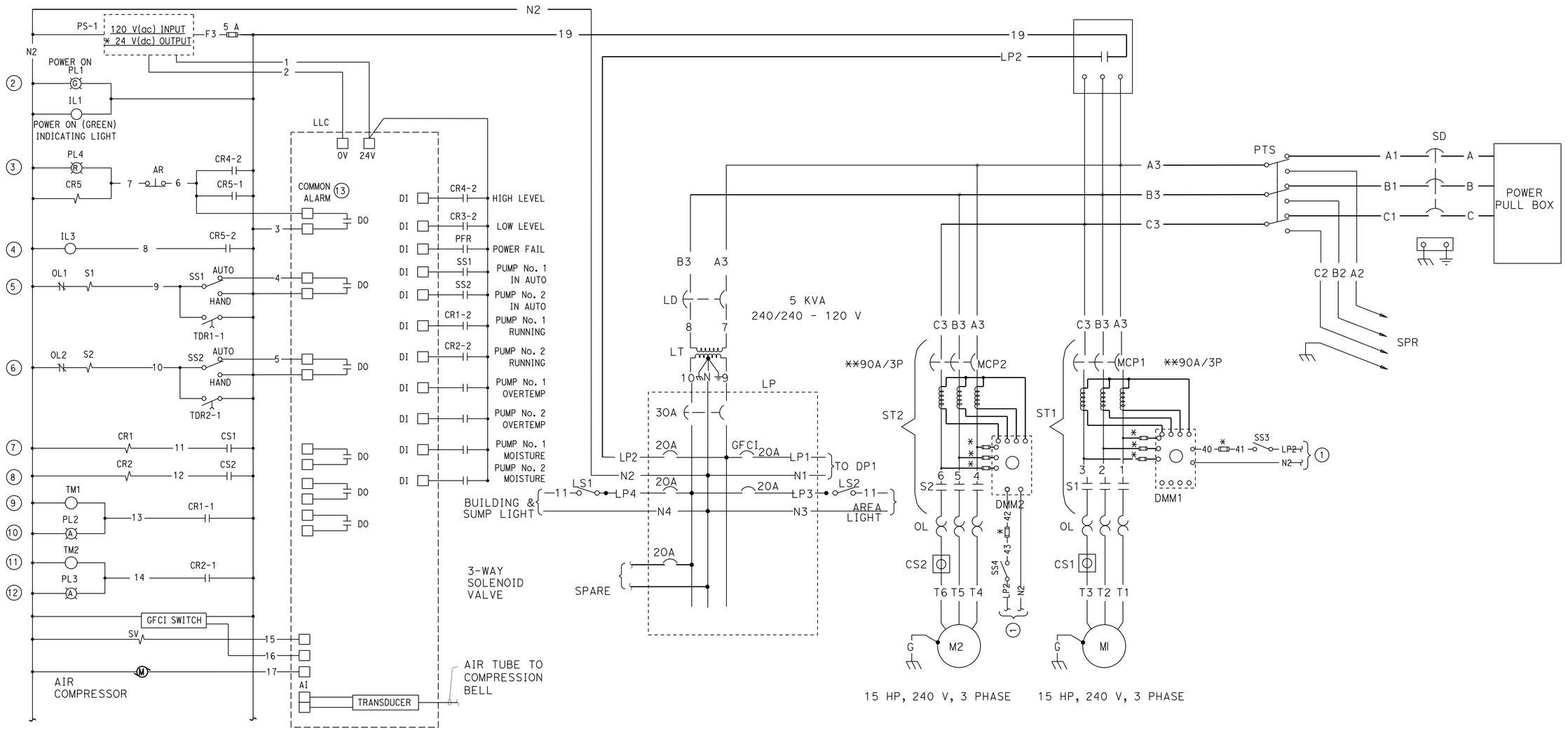

* RATING OF FUSE MUST BE AS REQUIRED BY THE MANUFACTURER OF THE DIGITAL METER

** RATING OF MCP TO BE AS REQUIRED BY THE PUMP AND MOTOR MANUFACTURER

CONTROL STATION SCHEMATIC
(NORTH LARKSPUR PUMPING PLANT)

E-11

REVISED BY	DATE REVISED
BE	8-28-15

CALCULATED-DESIGNED BY: HOMAYUN KOCHEKALI
CHECKED BY: BEHNAM EDALATI
FUNCTIONAL SUPERVISOR: BEHNAM EDALATI

STATE OF CALIFORNIA - DEPARTMENT OF TRANSPORTATION
Caltrans
ELECTRICAL

LAST REVISION 08-28-15
DATE PLOTTED => 28-JAN-2016
TIME PLOTTED => 12:32

Dist	COUNTY	ROUTE	POST MILES TOTAL PROJECT	SHEET No.	TOTAL SHEETS
04	SM	280	18.3,18.6	14	19

H. Kochekali 12-24-15
REGISTERED ELECTRICAL ENGINEER DATE

1-19-16
PLANS APPROVAL DATE

REGISTERED PROFESSIONAL ENGINEER
Homayun Kochekali
No. 17281
Exp. 6-30-16
ELECTRICAL
STATE OF CALIFORNIA

THE STATE OF CALIFORNIA OR ITS OFFICERS OR AGENTS SHALL NOT BE RESPONSIBLE FOR THE ACCURACY OR COMPLETENESS OF SCANNED COPIES OF THIS PLAN SHEET.

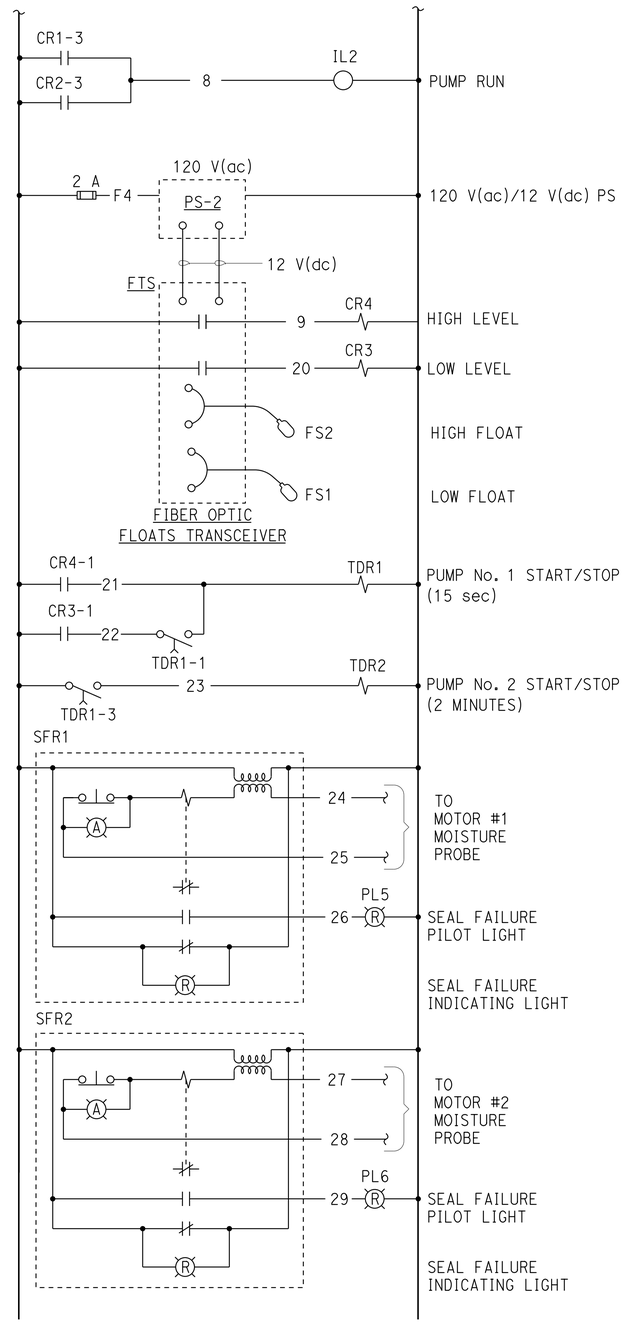

CONTROL SCHEMATIC DIAGRAM
CONTINUATION FROM SHEET E-11

CONTROL STATION SCHEMATIC
(NORTH LARKSPUR PUMPING PLANT)

E-12

STATE OF CALIFORNIA - DEPARTMENT OF TRANSPORTATION
Caltrans
ELECTRICAL

FUNCTIONAL SUPERVISOR: BEHNAM EDALATI
CALCULATED-DESIGNED BY: HOMAYUN KOCHEKALI
CHECKED BY: BEHNAM EDALATI
REVISED BY: BE
DATE REVISED: 8-28-15

LAST REVISION 08-28-15
DATE PLOTTED => 28-JAN-2016
TIME PLOTTED => 12:32

Dist	COUNTY	ROUTE	POST MILES TOTAL PROJECT	SHEET No.	TOTAL SHEETS
04	SM	280	18.3,18.6	15	19

H. Kochekali 12-24-15
REGISTERED ELECTRICAL ENGINEER DATE

1-19-16
PLANS APPROVAL DATE

REGISTERED PROFESSIONAL ENGINEER Homayun Kochekali No. 17281 Exp. 6-30-16 ELECTRICAL STATE OF CALIFORNIA

THE STATE OF CALIFORNIA OR ITS OFFICERS OR AGENTS SHALL NOT BE RESPONSIBLE FOR THE ACCURACY OR COMPLETENESS OF SCANNED COPIES OF THIS PLAN SHEET.

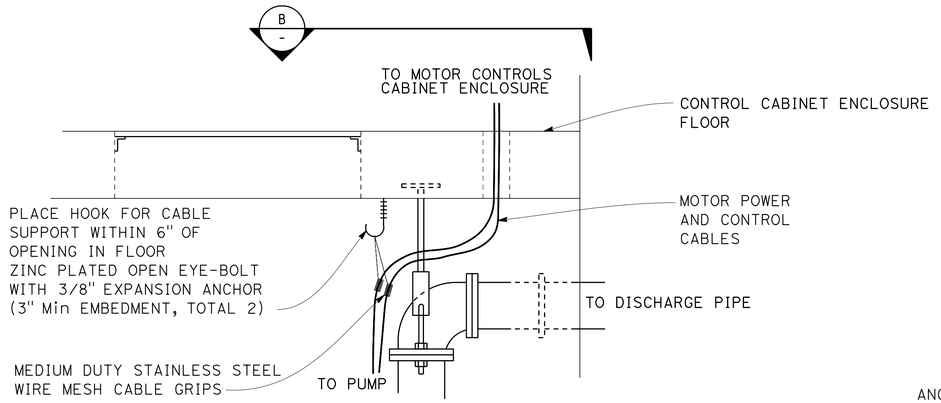

A MOTOR CABLE GRIP DETAIL - TWO PLACES

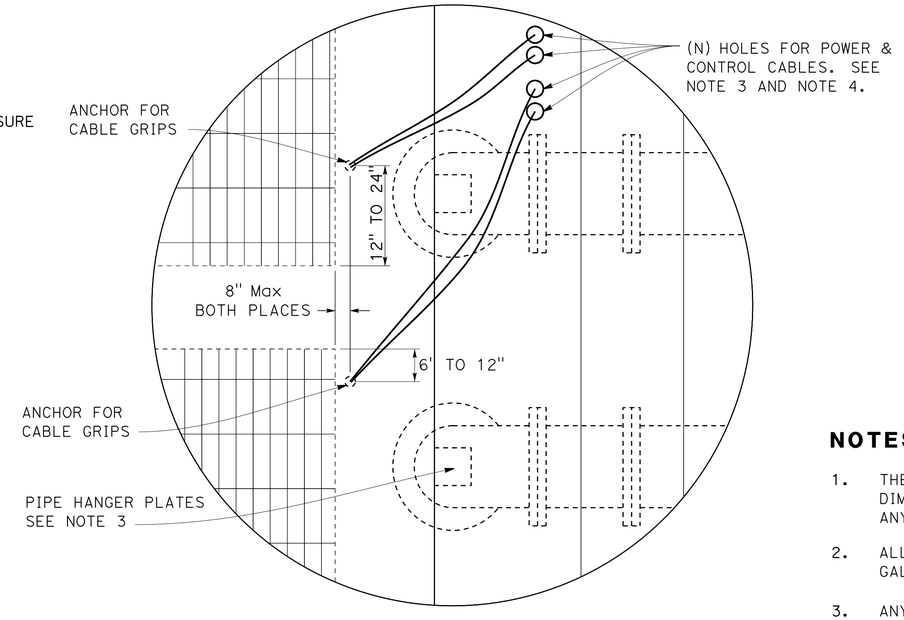

B MOTOR CABLE GRIP PLAN VIEW

NOTES:

1. THE CONTRACTOR SHALL VERIFY ALL CONTROLLING FIELD DIMENSIONS BEFORE ORDERING AND OR FABRICATING ANY MATERIAL.
2. ALL FERROUS PARTS OF PIPE SHALL BE HOT-DIPPED GALVANIZED AFTER FABRICATING.
3. ANY NEW HOLES THROUGH THE CONTROL CABINETS ENCLOSURE FLOOR MUST BE AT LEAST 12" FROM THE PIPE HANGER PLATES EMBEDDED IN THE CONCRETE.
4. THE EXISTING 8" DIAMETER STILLING TUBE HOLE CAN BE USED TO ROUTE POWER AND CONTROL CABLES INTO CONTROLLER CABINETS ENCLOSURE. IF NOT USED, PATCH IT.

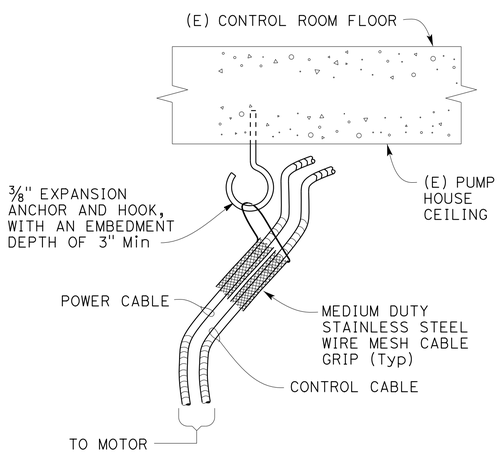

E DETAIL

NOTES:

1. THIS DRAWING ACCURATE FOR MECHANICAL WORK ONLY.
2. THE CONTRACTOR SHALL VERIFY ALL CONTROLLING FIELD DIMENSIONS AND CONDITIONS BEFORE ORDERING OR FABRICATING ANY MATERIAL.

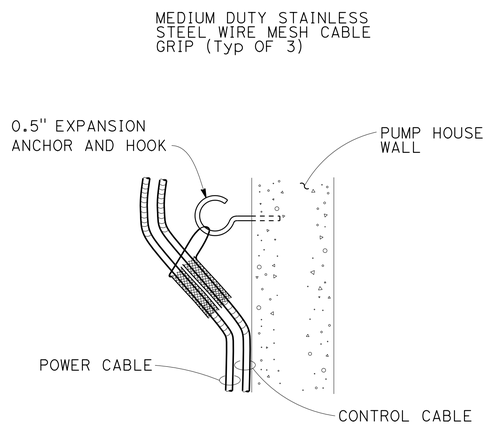

D PUMP MOTOR CABLES SUPPORT DETAIL

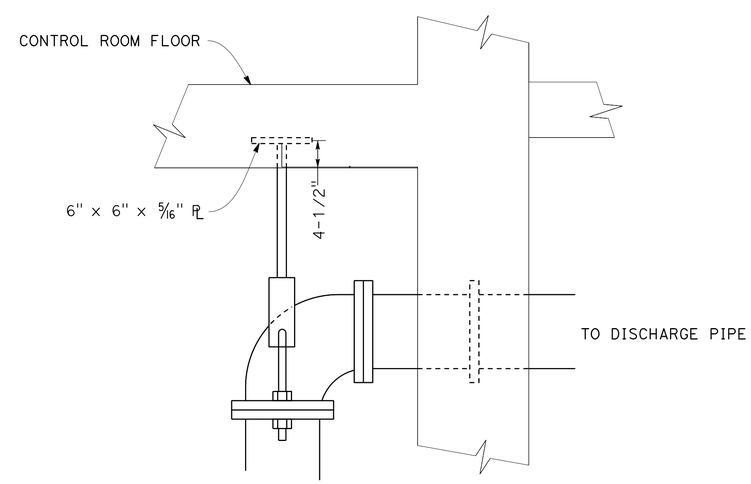

C PIPE HANGER DETAIL

ELECTRICAL DETAILS
MOTOR CABLE SUPPORT AND GRIP DETAIL
NO SCALE

E-13

REVISED BY	BE
DATE REVISED	8-28-15
CALCULATED-DESIGNED BY	HOMAYUN KOCHEKALI
CHECKED BY	BEHNAM EDALATI
FUNCTIONAL SUPERVISOR	BEHNAM EDALATI

STATE OF CALIFORNIA - DEPARTMENT OF TRANSPORTATION
ELECTRICAL
Caltrans

LAST REVISION 08-28-15 | DATE PLOTTED => 28-JAN-2016 | TIME PLOTTED => 12:32

Dist	COUNTY	ROUTE	POST MILES TOTAL PROJECT	SHEET No.	TOTAL SHEETS
04	SM	280	18.3,18.6	16	19

H. Kochekali 12-24-15
REGISTERED ELECTRICAL ENGINEER DATE

1-19-16
PLANS APPROVAL DATE

REGISTERED PROFESSIONAL ENGINEER
Homayun Kochekali
No. 17281
Exp. 6-30-16
ELECTRICAL
STATE OF CALIFORNIA

THE STATE OF CALIFORNIA OR ITS OFFICERS OR AGENTS SHALL NOT BE RESPONSIBLE FOR THE ACCURACY OR COMPLETENESS OF SCANNED COPIES OF THIS PLAN SHEET.

FLOAT SETTINGS (NORTH LARKSPUR)

FLOAT	FROM THE CONCRETE FLOOR
LOW	24"
HIGH	66"

FLOAT SETTINGS (SOUTH LARKSPUR)

FLOAT	FROM THE CONCRETE FLOOR
LOW	24"
HIGH	60"

PUMP CONTROLLER SETTINGS (NORTH LARKSPUR)

PUMP CONDITION	FROM THE CONCRETE FLOOR	CONTROLLER SETTING
LEAD ON	48.0"	42.5"
LEAD OFF	30.0"	18"
LAG ON	54.0"	54.5"
LAG OFF	36.0"	42.0"

PUMP CONTROLLER SETTINGS (SOUTH LARKSPUR)

PUMP CONDITION	FROM THE CONCRETE FLOOR	CONTROLLER SETTING
LEAD ON	42.0"	36.0"
LEAD OFF	24.0"	18.0"
LAG ON	48.0"	42.0"
LAG OFF	36.0"	24.0

NOTES:

1. THE CONTRACTOR SHALL VERIFY ALL CONTROLLING FIELD DIMENSIONS BEFORE ORDERING OR FABRICATING ANY MATERIAL.
2. ALL CONDUIT ELBOWS AND RISERS MUST BE TYPE 1.
3. ALL FASTENERS TO CONCRETE SHALL BE STAINLESS STEEL EXPANSION ANCHORAGE. SIZE OF STUDS SHOWN.

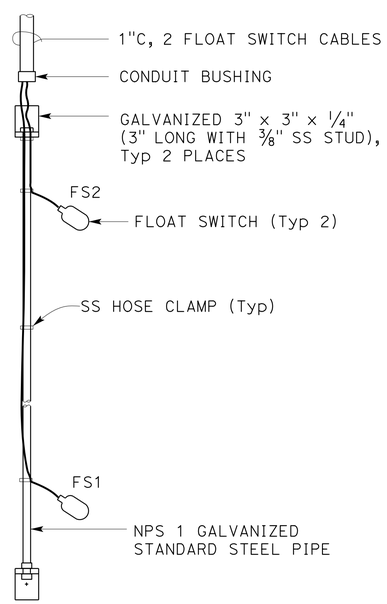

1 FLOAT SWITCH MOUNTING DETAIL

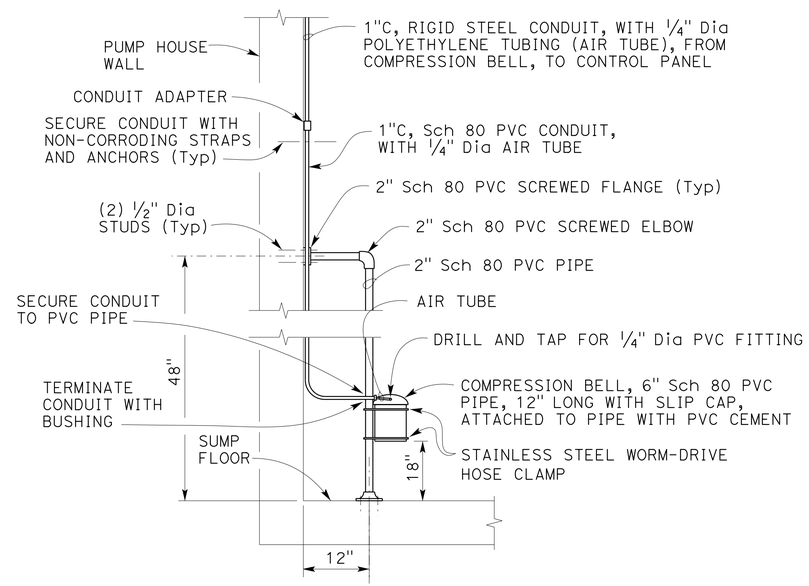

2 AIR TUBE AND COMPRESSION BELL MOUNTING DETAIL

ELECTRICAL DETAILS
FLOAT SWITCH AND COMPRESSION BELL
NO SCALE

E-14

STATE OF CALIFORNIA - DEPARTMENT OF TRANSPORTATION
Caltrans
ELECTRICAL
FUNCTIONAL SUPERVISOR: BEHNAM EDALATI
CALCULATED-DESIGNED BY: HOMAYUN KOCHEKALI
CHECKED BY: BEHNAM EDALATI
REVISED BY: BE
DATE REVISED: 8-28-15

LAST REVISION 08-28-15 | DATE PLOTTED => 28-JAN-2016 | TIME PLOTTED => 12:32

Dist	COUNTY	ROUTE	POST MILES TOTAL PROJECT	SHEET No.	TOTAL SHEETS
04	SM	280	18.3,18.6	17	19

H. Kochekali 12-24-15
REGISTERED ELECTRICAL ENGINEER DATE

1-19-16
PLANS APPROVAL DATE

REGISTERED PROFESSIONAL ENGINEER Homayun Kochekali No. 17281 Exp. 6-30-16 ELECTRICAL STATE OF CALIFORNIA

THE STATE OF CALIFORNIA OR ITS OFFICERS OR AGENTS SHALL NOT BE RESPONSIBLE FOR THE ACCURACY OR COMPLETENESS OF SCANNED COPIES OF THIS PLAN SHEET.

LIGHTING FIXTURE SCHEDULE

MANUFACTURER	TYPE	LAMP	Max INPUT WATTS	VOLTS	DESCRIPTION
GARDCO P21 SERIES, BETA LED THE EDGE SERIES, OR EQUAL	L1	LED ARRAY	90 W	120 V	POLE MOUNTED WITH 5" ARM OUTDOOR LED LUMINAIRE, 90 WATT LED ARRAY, TYPE FOUR MEDIUM DISTRIBUTION, FULL CUTOFF LUMINAIRE, 7000 MINIMUM DELIVERED LUMENS AT 4000 DEGREE KELVIN AND WITH CRI OF AT LEAST 70. THE FIXTURE SHALL BE SLIM LOW-PROFILE DESIGN, CONSTRUCTED FROM ONE PIECE DIE-CAST, RUGGED ALUMINUM WITH INTEGRAL, WEATHERTIGHT LED ENGINE DRIVER COMPARTMENTS AND HIGH PERFORMANCE ALUMINUM HEATSINKS. ALL EXPOSED DIE-CAST SURFACE SHALL HAVE A EPOXY PRIMER TO PROVIDE RESISTANCE TO CORROSION AND WHITE POWDER TOPCOAT. LED ENGINE DRIVER SHALL BE UL LISTED, 120V, 50,000 HOUR DESIGN LIFE, 0-10V DIMMING, 0.9 MINIMUM POWER FACTOR, 5-YEAR WARRANTY, COMPLETE WITH INTERNAL THERMAL PROTECTION AND OVERLOAD PROTECTION. FIXTURES SHALL BE UL LISTED FOR WET LOCATION AND IP66 RATED.

CALIFORNIA STATE FIRE MARSHAL APPROVED

Approval of this plan does not authorize or approve any omission or deviation from applicable regulations. Final approval is subject to field inspection. One set of approved plans shall be available on the project site at all times.

Reviewed by: _____

Approval date:

CSFM No:

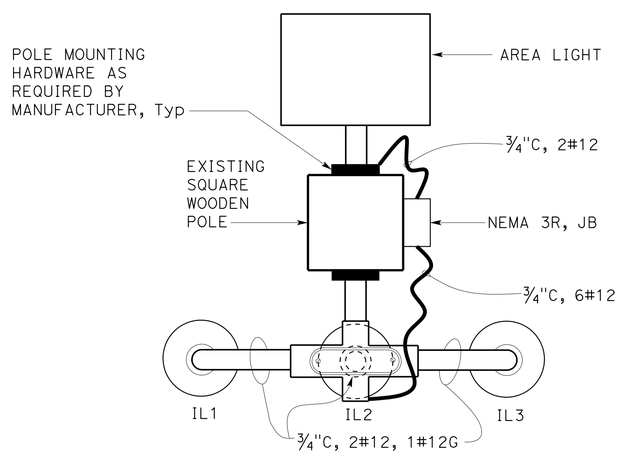

PLAN

1 INDICATOR LIGHTS MOUNTING DETAIL

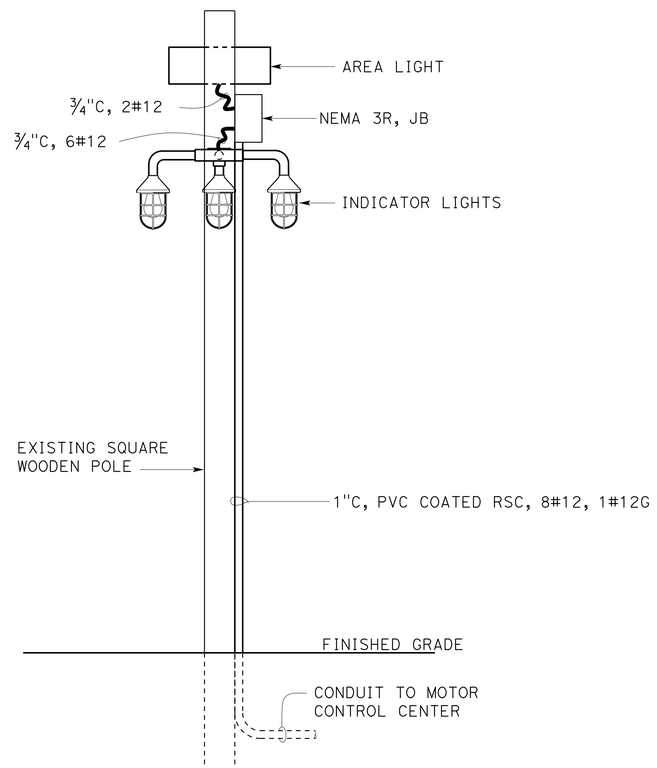

2 AREA AND INDICATOR LIGHTS POLE DETAIL

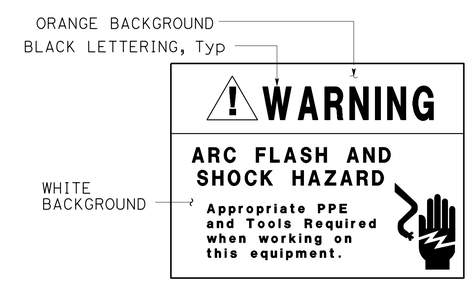

1 WARNING LABEL *

* WARNING LABEL MUST BE CONSTRUCTED WITH HIGH DEGREE OF CHEMICAL ABRASION, HEAT RESISTANCE AND UL RECOGNIZED MATERIAL. FURNISH FOUR LABELS TO THE ENGINEER FOR INSTALLATION AT VARIOUS PLACES.

ELECTRICAL DETAILS
PUMP POWER DIAGRAM (NORTH)
NO SCALE

E-15

REVISED BY	DATE REVISED
BE	8-28-15

HOMAYUN KOCHEKALI — BEHNAM EDALATI — CALCULATED-DESIGNED BY — CHECKED BY — FUNCTIONAL SUPERVISOR: BEHNAM EDALATI

STATE OF CALIFORNIA - DEPARTMENT OF TRANSPORTATION — ELECTRICAL — Caltrans

LAST REVISION 08-28-15 — DATE PLOTTED => 28-JAN-2016 — TIME PLOTTED => 12:32

M

Maint	MAINTENANCE
Max	MAXIMUM
MB	METAL BEAM
MBB	METAL BEAM BARRIER
MBGR	METAL BEAM GUARD RAILING
Med	MEDIAN
MGS	MIDWEST GUARDRAIL SYSTEM
MH	MANHOLE
Min	MINIMUM
Misc	MISCELLANEOUS
Misc I & S	MISCELLANEOUS IRON AND STEEL
Mkr	MARKER
Mod	MODIFIED,
	MODIFY
Mon	MONUMENT
MP	METAL PLATE
MPGR	METAL PLATE GUARD RAILING
MR	MOVEMENT RATING
MSE	MECHANICALLY STABILIZED EMBANKMENT
Mt	MOUNTAIN, MOUNT
Mtl	MATERIAL
MVP	MAINTENANCE VEHICLE PULLOUT

N

N	NORTH
NB	NORTHBOUND
No.	NUMBER (MUST HAVE PERIOD)
Nos.	NUMBERS (MUST HAVE PERIOD)
NPS	NOMINAL PIPE SIZE
NS	NEAR SIDE
NSP	NEW STANDARD PLAN
NTS	NOT TO SCALE

O

Oblr	OBLITERATE
OC	OVERCROSSING
OD	OUTSIDE DIAMETER
OF	OUTSIDE FACE
OG	ORIGINAL GROUND
OGAC	OPEN GRADED ASPHALT CONCRETE
OGFC	OPEN GRADED FRICTION COURSE
OH	OVERHEAD
OHWM	ORDINARY HIGH WATER MARK
O-O	OUT TO OUT
Opp	OPPOSITE
OSD	OVERSIDE DRAIN

P

p	PAGE
PAP	PERFORATED ALUMINUM PIPE
PB	PULL BOX
PC	POINT OF CURVATURE,
	PRECAST
PCC	POINT OF COMPOUND CURVE,
	PORTLAND CEMENT CONCRETE
PCMS	PORTABLE CHANGEABLE MESSAGE SIGN
PCP	PERFORATED CONCRETE PIPE,
	PRESTRESSED CONCRETE PIPE
PCVC	POINT OF COMPOUND VERTICAL CURVE
PEC	PERMIT TO ENTER AND CONSTRUCT
Ped	PEDESTRIAN
Ped OC	PEDESTRIAN OVERCROSSING
Ped UC	PEDESTRIAN UNDERCROSSING
Perm Mtl	PERMEABLE MATERIAL

P continued

PG	PROFILE GRADE
PI	POINT OF INTERSECTION
PJP	PARTIAL JOINT PENETRATION
Pkwy	PARKWAY
ℙ,PL	PLATE
P/L	PROPERTY LINE
PM	POST MILE,
	TIME FROM NOON TO MIDNIGHT
PN	PAVING NOTCH
POC	POINT OF HORIZONTAL CURVE
POT	POINT OF TANGENT
POVC	POINT OF VERTICAL CURVE
PP	PIPE PILE,
	PLASTIC PIPE,
	POWER POLE
PPL	PREFORMED PERMEABLE LINER
PPP	PERFORATED PLASTIC PIPE
PRC	POINT OF REVERSE CURVE
PRF	PAVEMENT REINFORCING FABRIC
PRVC	POINT OF REVERSE VERTICAL CURVE
PS&E	PLANS, SPECIFICATIONS AND ESTIMATES
PS, P/S	PRESTRESSED
PSP	PERFORATED STEEL PIPE
PT	POINT OF TANGENCY
PVC	POLYVINYL CHLORIDE
Pvmt	PAVEMENT

Q

Qty	QUANTITY

R

R	RADIUS
R & D	REMOVE AND DISPOSE
R & S	REMOVE AND SALVAGE
R/C	RATE OF CHANGE
RCA	REINFORCED CONCRETE ARCH
RCB	REINFORCED CONCRETE BOX
RCP	REINFORCED CONCRETE PIPE
RCPA	REINFORCED CONCRETE PIPE ARCH
Rd	ROAD
Reinf	REINFORCED,
	REINFORCEMENT,
	REINFORCING
Rel	RELOCATE
Repl	REPLACEMENT
Ret	RETAINING
Rev	REVISED, REVISION
Rdwy	ROADWAY
RHMA	RUBBERIZED HOT MIX ASPHALT
Riv	RIVER
RM	ROAD-MIXED
RP	RADIUS POINT,
	REFERENCE POINT
RR	RAILROAD
RSP	ROCK SLOPE PROTECTION,
	REVISED STANDARD PLAN
Rt	RIGHT
Rte	ROUTE
RW	REDWOOD,
	RETAINING WALL
R/W	RIGHT OF WAY
Rwy	RAILWAY

S

S	SOUTH,
	SUPPLEMENT
SAE	STRUCTURE APPROACH EMBANKMENT
Salv	SALVAGE
SAPP	STRUCTURAL ALUMINUM PLATE PIPE
SB	SOUTHBOUND
SC	SAND CUSHION
SCSP	SLOTTED CORRUGATED STEEL PIPE
SD	STORM DRAIN
Sec	SECOND,
	SECTION
Sep	SEPARATION
SG	SUBGRADE
Shld	SHOULDER
Sht	SHEET
Sim	SIMILAR
℄	STATION LINE
SM	SELECTED MATERIAL
Spec	SPECIAL,
	SPECIFICATIONS
SPP	SLOTTED PLASTIC PIPE
SS	SLOPE STAKE
SSBM	STRAP AND SADDLE BRACKET METHOD
SSD	STRUCTURAL SECTION DRAIN
SSPA	STRUCTURAL STEEL PLATE ARCH
SSPP	STRUCTURAL STEEL PLATE PIPE
SSPPA	STRUCTURAL STEEL PLATE PIPE ARCH
SSRP	STEEL SPIRAL RIB PIPE
St	STREET
Sta	STATION
STBB	SINGLE THRIE BEAM BARRIER
Std	STANDARD
Str	STRUCTURE
Surf	SURFACING
SW	SIDEWALK,
	SOUND WALL
Swr	SEWER
Sym	SYMMETRICAL
S4S	SURFACE 4 SIDES

T

T	SEMI-TANGENT
Tan	TANGENT
TBB	THRIE BEAM BARRIER
Tbr	TIMBER
TC	TOP OF CURB
TCB	TRAFFIC CONTROL BOX
TCE	TEMPORARY CONSTRUCTION EASEMENT
Tel	TELEPHONE
Temp	TEMPORARY
TG	TOP OF GRADE
Tot	TOTAL
TP	TELEPHONE POLE
TPB	TREATED PERMEABLE BASE
TPM	TREATED PERMEABLE MATERIAL
Trans	TRANSITION

T continued

TS	TRANSVERSE,
	TRAFFIC SIGNAL,
	TUBULAR STEEL
Typ	TYPICAL

U

UC	UNDERCROSSING
UD	UNDERDRAIN
UG	UNDERGROUND
UON	UNLESS OTHERWISE NOTED
UP	UNDERPASS

V

V	VALVE,
	DESIGN SPEED
Var	VARIABLE,
	VARIES
VC	VERTICAL CURVE
VCP	VITRIFIED CLAY PIPE
Vert	VERTICAL
Via	VIADUCT
Vol	VOLUME

W

W	WEST,
	WIDTH
WB	WESTBOUND
WH	WEEP HOLE
WM	WIRE MESH
WS	WATER SURFACE
WSP	WELDED STEEL PIPE
Wt	WEIGHT
WV	WATER VALVE
WW	WINGWALL
WWLOL	WINGWALL LAYOUT LINE

X

X Sec	CROSS SECTION
Xing	CROSSING

Y

Yr	YEAR
Yrs	YEARS

Dist	COUNTY	ROUTE	POST MILES TOTAL PROJECT	SHEET No.	TOTAL SHEETS
04	SM	280	18.3,18.6	18	19

Grace M. Tsushima
REGISTERED CIVIL ENGINEER

July 19, 2013
PLANS APPROVAL DATE

REGISTERED PROFESSIONAL ENGINEER Grace M. Tsushima No. C49814 Exp. 9-30-14 CIVIL STATE OF CALIFORNIA

THE STATE OF CALIFORNIA OR ITS OFFICERS OR AGENTS SHALL NOT BE RESPONSIBLE FOR THE ACCURACY OR COMPLETENESS OF SCANNED COPIES OF THIS PLAN SHEET.

TO ACCOMPANY PLANS DATED 1-19-16

UNIT OF MEASUREMENT SYMBOLS:

Some of the symbols used in the project plan quantity tables and in the Bid Item List are:

TABLE A

SYMBOL USED	DEFINITIONS
ACRE	ACRE
CF	CUBIC FOOT
CY	CUBIC YARD
EA	EACH
GAL	GALLON
LB	POUND
LF	LINEAR FOOT
SQFT	SQUARE FOOT
SQYD	SQUARE YARD
STA	100 FEET
TAB	TABLET
TON	2,000 POUNDS

Some of the symbols used in the plans other than in the project plan quantity tables are:

TABLE B

SYMBOL USED	DEFINITIONS
ksi	KIPS PER SQUARE INCH
ksf	KIPS PER SQUARE FOOT
psi	POUNDS PER SQUARE INCH
psf	POUNDS PER SQUARE FOOT
lb/ft^3, pcf	POUNDS PER CUBIC FOOT
tsf	TONS PER SQUARE FOOT
mph, MPH *	MILES PER HOUR
ø	NOMINAL DIAMETER
oz	OUNCE
lb	POUND
kip	1,000 POUNDS
cal	CALORIE
ft	FOOT OR FEET
gal	GALLON

* For use on a sign panel only

STATE OF CALIFORNIA
DEPARTMENT OF TRANSPORTATION

ABBREVIATIONS (SHEET 2 OF 2)

NO SCALE

RSP A10B DATED JULY 19, 2013 SUPERSEDES STANDARD PLAN A10B DATED MAY 20, 2011 - PAGE 2 OF THE STANDARD PLANS BOOK DATED 2010.

REVISED STANDARD PLAN RSP A10B

2010 REVISED STANDARD PLAN RSP A10B

6-7-13

DIST	COUNTY	ROUTE	POST MILES TOTAL PROJECT	SHEET NO.	TOTAL SHEETS
04	SM	280	18.3,18.6	19	19

Theresa Gabriel
REGISTERED ELECTRICAL ENGINEER

July 19, 2013
PLANS APPROVAL DATE

REGISTERED PROFESSIONAL ENGINEER Theresa Aziz Gabriel No. E15129 Exp. 6-30-14 ELECTRICAL STATE OF CALIFORNIA

THE STATE OF CALIFORNIA OR ITS OFFICERS OR AGENTS SHALL NOT BE RESPONSIBLE FOR THE ACCURACY OR COMPLETENESS OF SCANNED COPIES OF THIS PLAN SHEET.

TO ACCOMPANY PLANS DATED 1-19-16

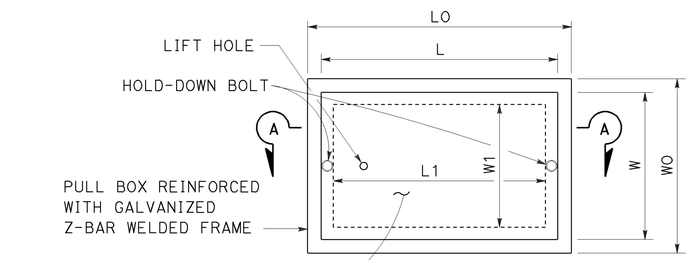

TOP VIEW

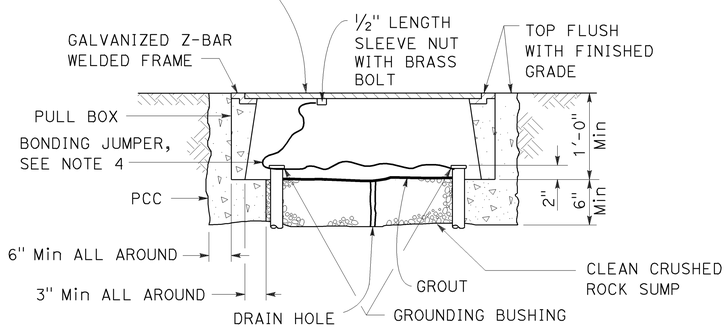

SECTION A-A

No. 3½(T), No. 5(T) AND No. 6(T) TRAFFIC PULL BOX

NOTES:

1. Traffic pull box shall be provided with steel cover and special concrete footing. Steel cover shall have embossed non-skid pattern.
2. Steel reinforcing shall be as regularly used in the standard products of the respective manufacturer.
3. Pull box covers shall be marked as follows: "SERVICE" Service circuits between service point and service disconnect; "SPRINKLER-CONTROL" Sprinkler control circuits, 50 V or less; "CALTRANS" On all pull boxes, except pull boxes marked "SPRINKLER-CONTROL"; and "TELEPHONE" Telephone service.
   A) No. 3½(T) pull box.
      1) "SIGNAL" - Traffic signal circuits with or without lighting or sign lighting circuits.
      2) "LIGHTING" - Lighting or sign lighting circuits where voltage is under 600 V.
   B) No. 5(T) or 6(T) pull box.
      1) "TRAFFIC SIGNAL" - Traffic signal circuits with or without lighting or sign lighting circuits.
      2) "LIGHTING" - Lighting or sign lighting circuits where voltage is under 600 V.
      3) "LIGHTING-HIGH VOLTAGE" - Lighting or sign lighting circuits where voltage is above 600 V.
      4) "IRRIGATION" - Circuits to irrigation controller 120 V or more.
      5) "RAMP METER" - Ramp meter circuits.
      6) "COUNT STATION" - Count or speed monitor circuits.
      7) "COMMUNICATION" - Communication circuits.
      8) "TOS COMMUNICATIONS" - TOS communications line.
      9) "TOS POWER" - TOS power.
      10) "TDC POWER" - Telephone demarcation cabinet power.
      11) "CCTV" - Closed circuit television circuits.
      12) "TMS" - Traffic monitoring station circuits.
      13) "CMS" - Changeable message sign circuits.
      14) "HAR" - Highway advisory radio circuits.
      15) "BOOSTER PUMP" - Booster pump circuit.
4. Bonding jumper for metal covers shall be 3' long, minimum.
5. The nominal dimensions of the opening in which the cover sets shall be the same as the cover dimensions except the length and width dimensions shall be ⅛" greater.
6. Covers and boxes shall be interchangeable with California standard male and female gages. When interchanged with a standard male or female gage, the top surfaces shall be flush within ⅛".

DIMENSION TABLE

PULL BOX	PULL BOX						COVER				
	MINIMUM * THICKNESS	MINIMUM DEPTH BOX AND EXTENSION	WO	LO	L1	W1	L **	W **	R	EDGE THICKNESS	EDGE TAPER
No. 3½(T)	1½"	1'-0"	1'-5"± 1"	1'-8⅞"±	1'-2½"±	10⅝"± 1"	1'-8"±	1'-1¾"±	0"	½"	NONE
No. 5(T)	1¾"	1'-0"	1'-11½"± 1"	2'-5½"±	1'-7"±	1'-1"± 1"	2'-3"±	1'-4"±	0"	½"	NONE
No. 6(T)	2"	1'-0"	2'-6"± 1"	2'-11½"±	1'-11½"±	1'-5"± 1"	2'-9"±	1'-8"±	0"	½"	NONE

* EXCLUDING CONDUIT WEB ** TOP DIMENSION

STATE OF CALIFORNIA
DEPARTMENT OF TRANSPORTATION

ELECTRICAL SYSTEMS (TRAFFIC PULL BOX)

NO SCALE

RSP ES-8B DATED JULY 19, 2013 SUPERSEDES RSP ES-8B DATED JANUARY 20, 2012 THAT SUPPLEMENTS THE STANDARD PLANS BOOK DATED 2010.

REVISED STANDARD PLAN RSP ES-8B

2010 REVISED STANDARD PLAN RSP ES-8B