Dist	COUNTY	ROUTE	POST MILES TOTAL PROJECT	SHEET No.	TOTAL SHEETS
04	SCI	101	47.9/52.2	1	31

INDEX OF PLANS

SHEET No.	DESCRIPTION
1	TITLE SHEET AND LOCATION MAP
2	CONSTRUCTION AREA SIGNS
3 - 5	TRAFFIC HANDLING PLANS
6 - 13	ELECTRICAL PLANS
14 - 22	REVISED STANDARD PLANS

STRUCTURE PLANS

23 - 25	GENERAL PLANS
26 - 31	BARRIER REPLACEMENT DETAILS

THE STANDARD PLANS LIST APPLICABLE TO THIS CONTRACT IS INCLUDED IN THE NOTICE TO BIDDERS AND SPECIAL PROVISIONS BOOK.

STATE OF CALIFORNIA

DEPARTMENT OF TRANSPORTATION

PROJECT PLANS FOR CONSTRUCTION ON STATE HIGHWAY

IN SANTA CLARA COUNTY IN PALO ALTO AND MOUNTAIN VIEW AT VARIOUS LOCATIONS

TO BE SUPPLEMENTED BY STANDARD PLANS DATED MAY 2006

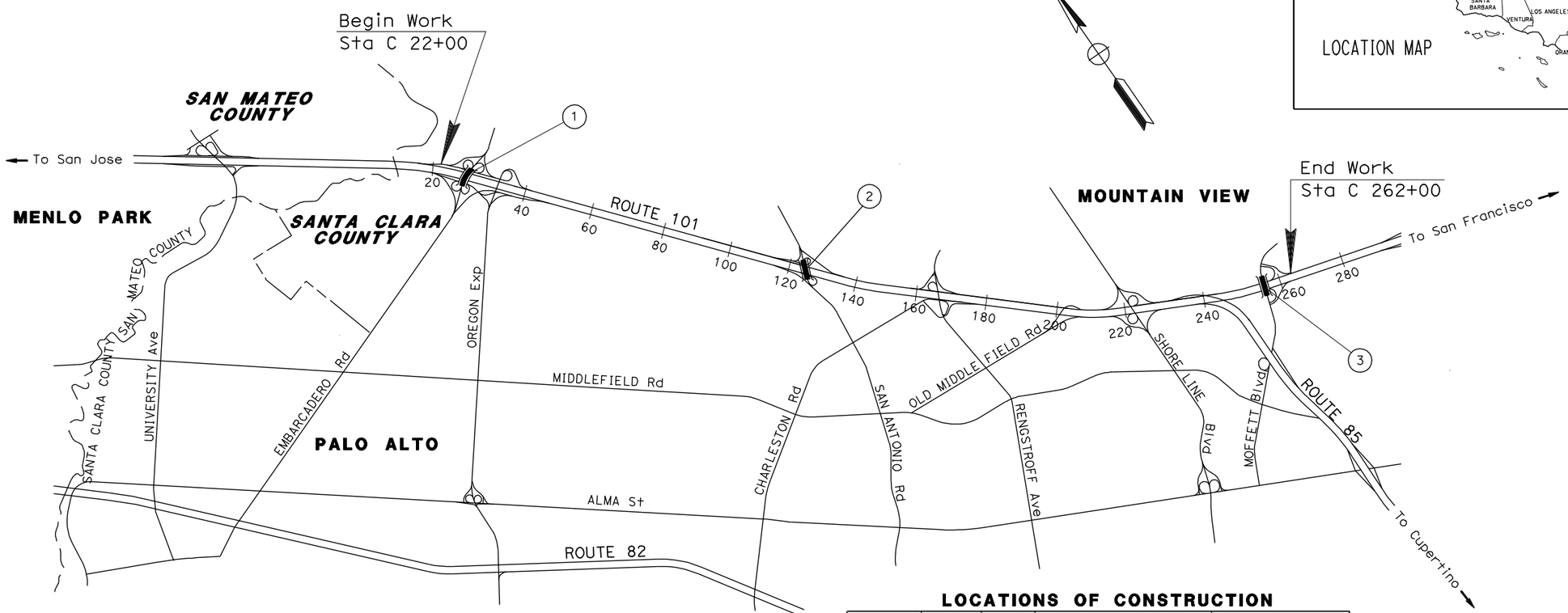

LOCATIONS OF CONSTRUCTION

No. (X)	ROUTE	PM	BRIDGE NAME	BRIDGE NUMBER
1	101	52.17	EMBARCADERO Rd UC	37-150
2	101	50.32	SAN ANTONIO Rd UC	37-146
3	101	47.89	MOFFETT Blvd UC	37-105

NO SCALE

Louis Fagliano 10/1/10
PROJECT ENGINEER DATE
REGISTERED CIVIL ENGINEER

October 25, 2010
PLANS APPROVAL DATE

REGISTERED PROFESSIONAL ENGINEER
Louis S. Fagliano
No. 42079
Exp. 3-31-12
CIVIL
STATE OF CALIFORNIA

THE STATE OF CALIFORNIA OR ITS OFFICERS OR AGENTS SHALL NOT BE RESPONSIBLE FOR THE ACCURACY OR COMPLETENESS OF SCANNED COPIES OF THIS PLAN SHEET.

THE CONTRACTOR SHALL POSSESS THE CLASS (OR CLASSES) OF LICENSE AS SPECIFIED IN THE "NOTICE TO BIDDERS."

PROJECT MANAGER: NICK SALEH
DESIGN ENGINEER: LOUIS FAGLIANO

CONTRACT No.	04-3A9804
PROJECT ID	0400000973

LAST REVISION 08-05-10
DATE PLOTTED => 16-MAR-2011
TIME PLOTTED => 07:39

Dist	COUNTY	ROUTE	POST MILES TOTAL PROJECT	SHEET No.	TOTAL SHEETS
04	SCI	101	47.9/52.2	2	31

REGISTERED CIVIL ENGINEER 10/5/10 DATE

10-25-10
PLANS APPROVAL DATE

REGISTERED PROFESSIONAL ENGINEER Jerilyn L. Struven No. 49964 Exp. 12-31-10 CIVIL STATE OF CALIFORNIA

THE STATE OF CALIFORNIA OR ITS OFFICERS OR AGENTS SHALL NOT BE RESPONSIBLE FOR THE ACCURACY OR COMPLETENESS OF SCANNED COPIES OF THIS PLAN SHEET.

STATIONARY MOUNTED CONSTRUCTION AREA SIGNS

SIGN LETTER	SIGN CODE FEDERAL	SIGN CODE CALIFORNIA	PANEL SIZE	SIGN MESSAGE	NUMBER OF POSTS AND SIZE	No. OF SIGNS
A	W20-1	C23	48''x 48''	ROAD WORK AHEAD	(ONE) 6''x 6''	12
B	G20-2	C14	36''x 18''	END ROAD WORK	(ONE) 4''x 6''	12
C		SPEC 1	36''x 18''	SIDEWALK CLOSED AHEAD	(ONE) 4''x 6''	7
D		SPEC 2	36''x 18''	SIDEWALK CLOSED	(ONE) 4''x 6''	6

LEGEND:

A CONSTRUCTION AREA SIGN LETTER

NOTE:

EXACT LOCATION AND POSITION OF CONSTRUCTION AREA SIGNS TO BE DETERMINED BY ENGINEER.

36'' x 18''

SIDEWALK CLOSED AHEAD — 3'' C CAPS

BLACK/ORANGE

SPEC 1

36'' x 18''

SIDEWALK CLOSED — 4'' D CAPS

BLACK/WHITE

SPEC 2

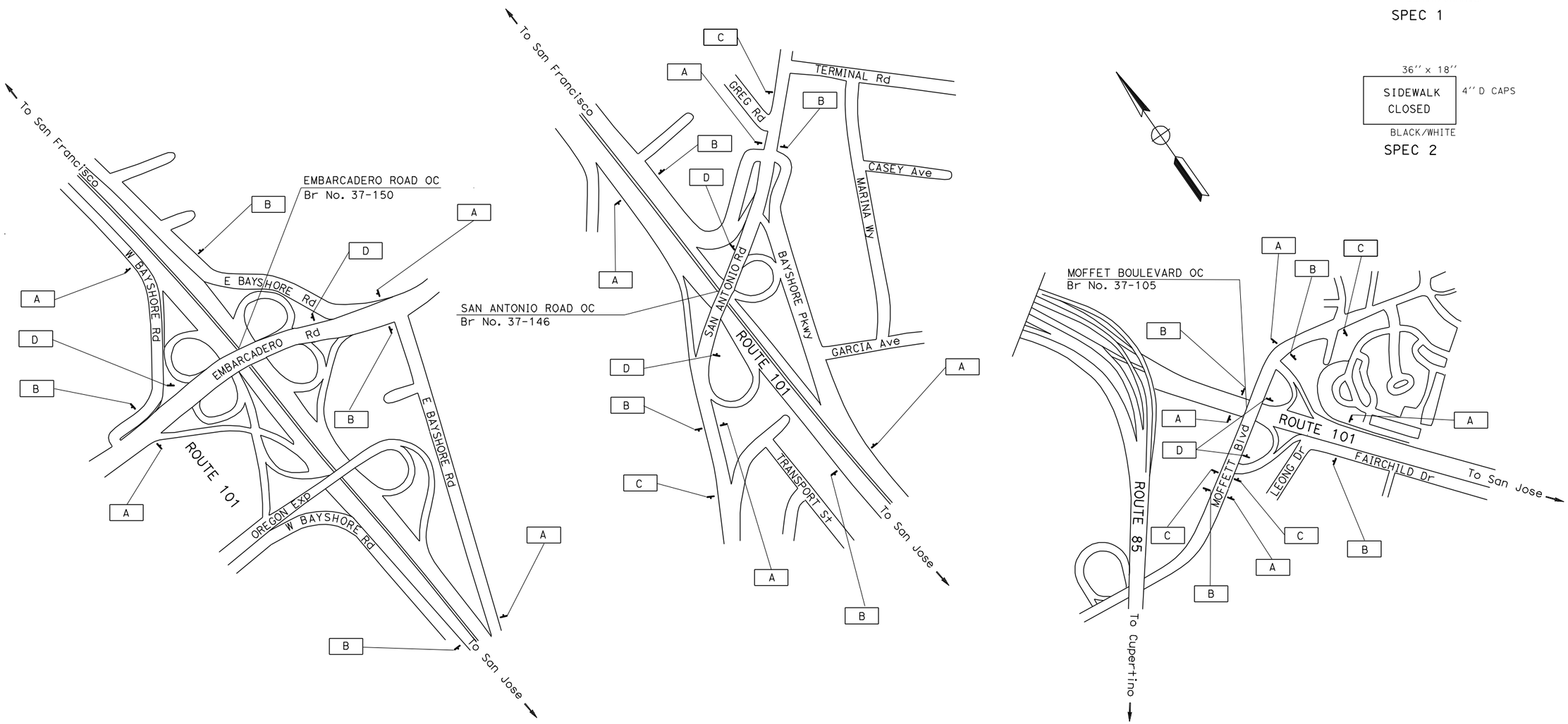

CONSTRUCTION AREA SIGNS

NO SCALE

THIS PLAN ACCURATE FOR CONSTRUCTION AREA SIGN WORK ONLY

CS-1

STATE OF CALIFORNIA - DEPARTMENT OF TRANSPORTATION

Caltrans

TRAFFIC

FUNCTIONAL SUPERVISOR: ROLAND AU-YEUNG

CALCULATED-DESIGNED BY: LILY Y. TING

CHECKED BY: JERILYN STRUVEN

REVISED BY

DATE REVISED

LAST REVISION 08-05-10

DATE PLOTTED => 16-MAR-2011
TIME PLOTTED => 07:39

Dist	COUNTY	ROUTE	POST MILES TOTAL PROJECT	SHEET No.	TOTAL SHEETS
04	SCI	101	47.9/52.2	3	31

Louis Fagliano 10/1/10
REGISTERED CIVIL ENGINEER DATE

10-25-10
PLANS APPROVAL DATE

REGISTERED PROFESSIONAL ENGINEER
Louis S. Fagliano
No. 42079
Exp. 3-31-12
CIVIL
STATE OF CALIFORNIA

THE STATE OF CALIFORNIA OR ITS OFFICERS OR AGENTS SHALL NOT BE RESPONSIBLE FOR THE ACCURACY OR COMPLETENESS OF SCANNED COPIES OF THIS PLAN SHEET.

LEGEND:

➡ DIRECTION OF TRAFFIC

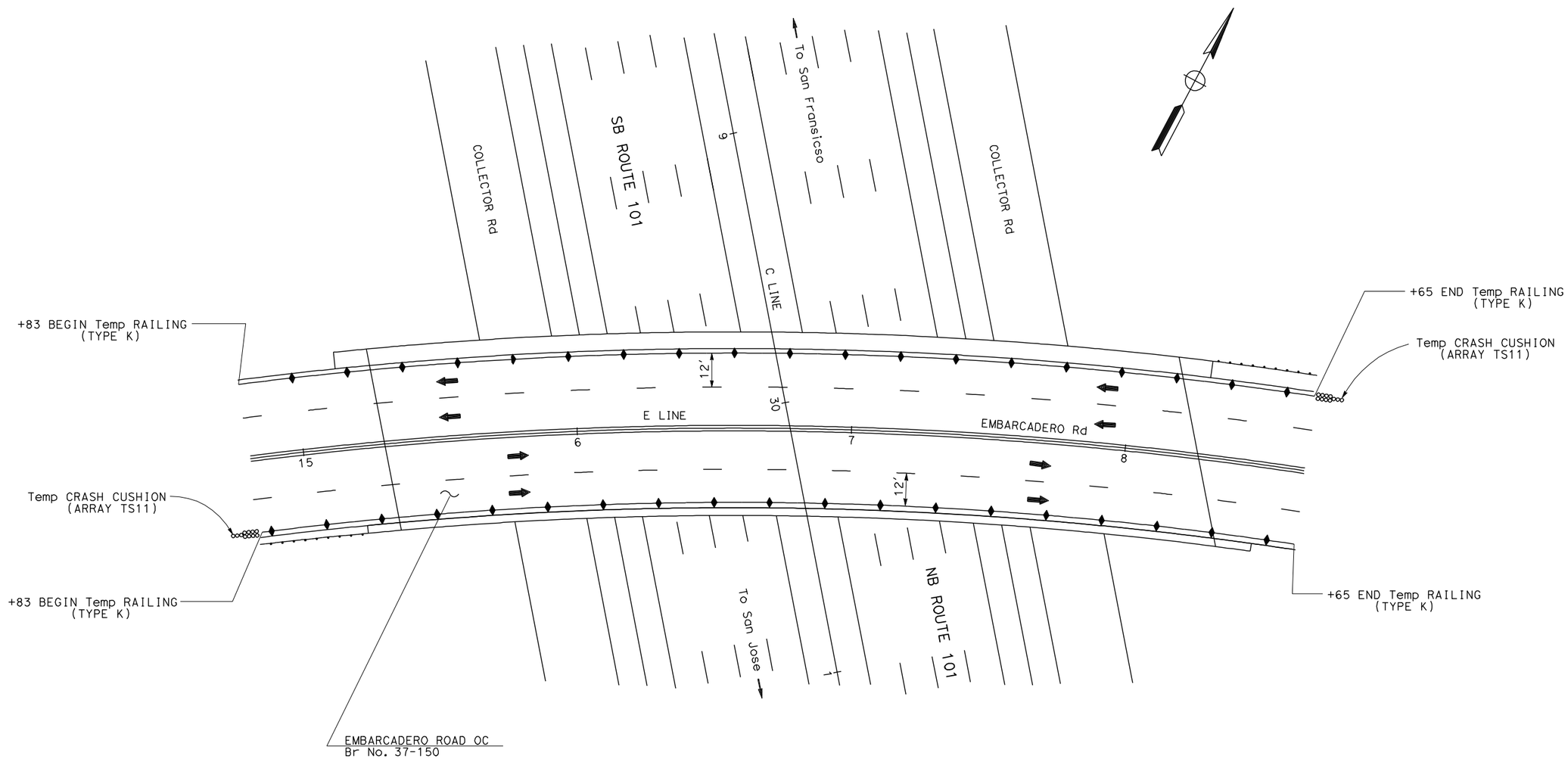

TRAFFIC HANDLING PLAN

SCALE: 1'' = 50'

THIS PLAN ACCURATE FOR TRAFFIC HANDLING WORK ONLY

TH-1

STATE OF CALIFORNIA - DEPARTMENT OF TRANSPORTATION	Caltrans DESIGN	FUNCTIONAL SUPERVISOR: LOUIS FLAGLIANO	CALCULATED-DESIGNED BY: LOUIS FLAGLIANO
			CHECKED BY: GIANG T. HA
			REVISED BY: LF
			DATE REVISED: 9/29/10

LAST REVISION 08-05-10 | DATE PLOTTED => 16-MAR-2011 | TIME PLOTTED => 07:40

Dist	COUNTY	ROUTE	POST MILES TOTAL PROJECT	SHEET No.	TOTAL SHEETS
04	SCI	101	47.9/52.2	4	31

Louis Fagliano 10/1/10
REGISTERED CIVIL ENGINEER DATE

10-25-10
PLANS APPROVAL DATE

REGISTERED PROFESSIONAL ENGINEER
Louis S. Fagliano
No. 42079
Exp 3-31-12
CIVIL
STATE OF CALIFORNIA

THE STATE OF CALIFORNIA OR ITS OFFICERS OR AGENTS SHALL NOT BE RESPONSIBLE FOR THE ACCURACY OR COMPLETENESS OF SCANNED COPIES OF THIS PLAN SHEET.

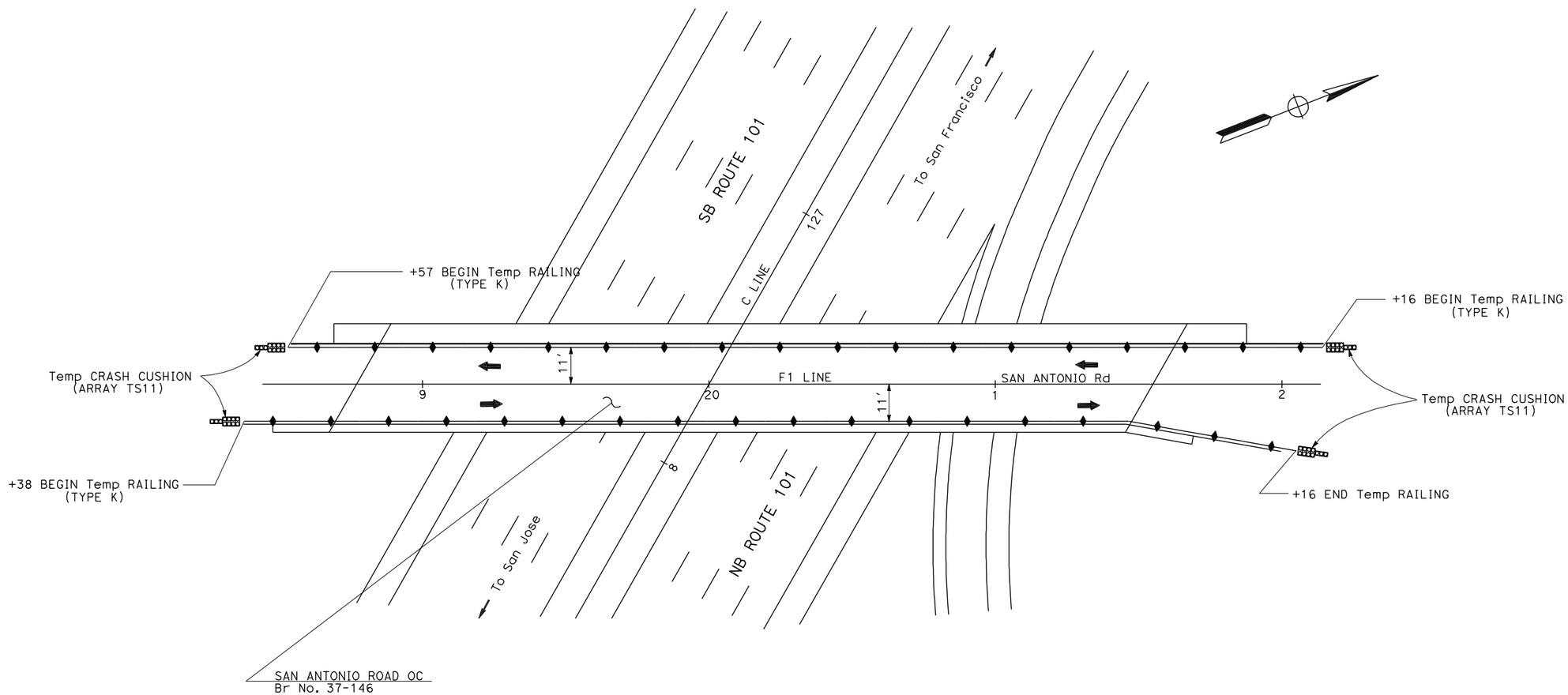

TRAFFIC HANDLING PLAN

SCALE: 1'' = 50'

FOR NOTES, ABBREVIATIONS AND LEGEND, SEE SHEET TH-1

THIS PLAN ACCURATE FOR TRAFFIC HANDLING WORK ONLY

TH-2

REVISED BY	DATE REVISED
LF	9/29/10

LOUIS FLAGLIANO — CALCULATED-DESIGNED BY
GIANG T. HA — CHECKED BY
LOUIS FLAGLIANO — FUNCTIONAL SUPERVISOR

STATE OF CALIFORNIA - DEPARTMENT OF TRANSPORTATION
Caltrans
DESIGN

LAST REVISION 08-05-10
DATE PLOTTED => 16-MAR-2011
TIME PLOTTED => 07:40

Dist	COUNTY	ROUTE	POST MILES TOTAL PROJECT	SHEET No.	TOTAL SHEETS
04	SCI	101	47.9/52.2	5	31

Louis Fagliano 10/1/10
REGISTERED CIVIL ENGINEER DATE

10-25-10
PLANS APPROVAL DATE

REGISTERED PROFESSIONAL ENGINEER
Louis S. Fagliano
No. 42079
Exp. 3-31-12
CIVIL
STATE OF CALIFORNIA

THE STATE OF CALIFORNIA OR ITS OFFICERS OR AGENTS SHALL NOT BE RESPONSIBLE FOR THE ACCURACY OR COMPLETENESS OF SCANNED COPIES OF THIS PLAN SHEET.

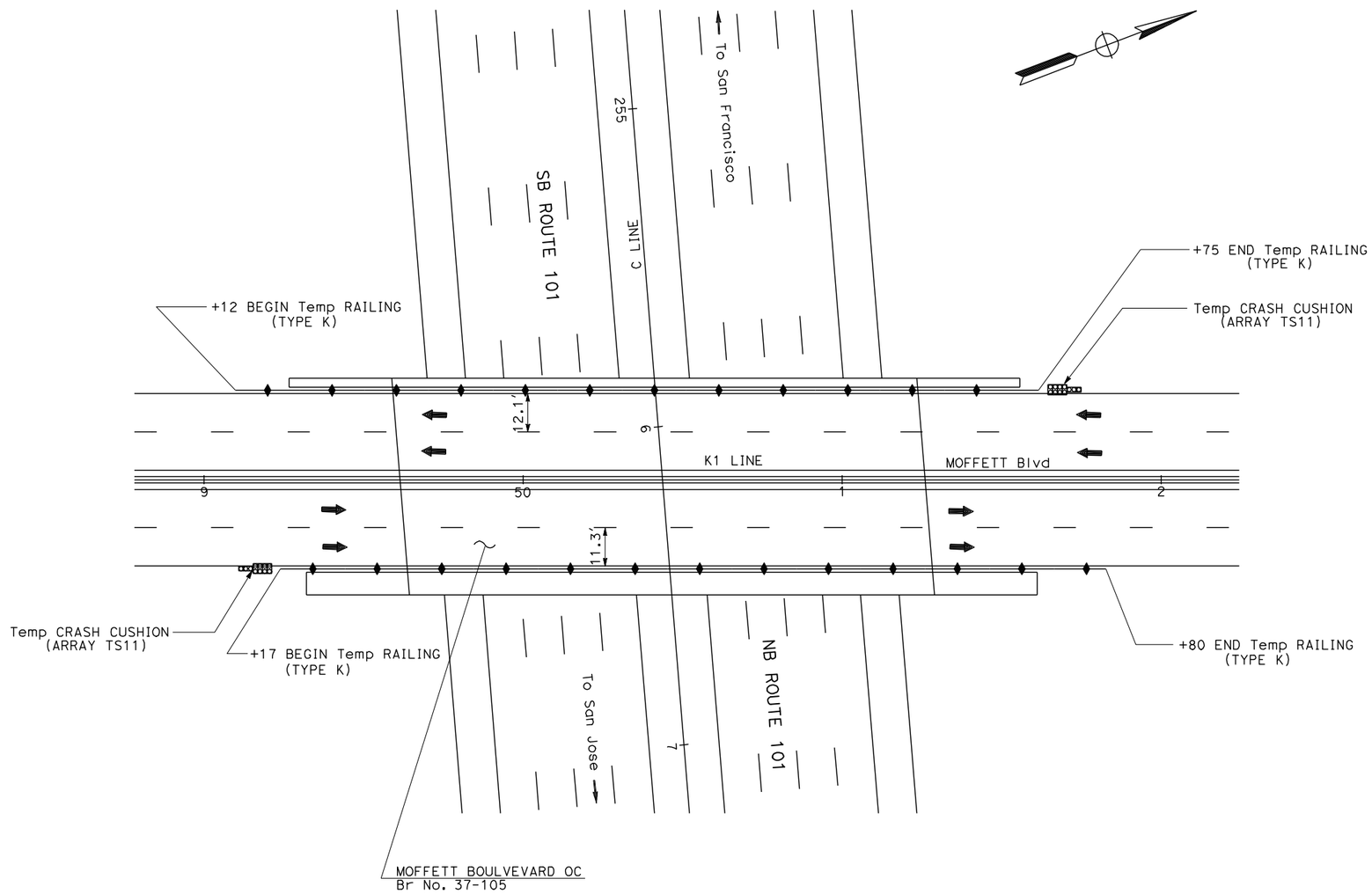

TRAFFIC HANDLING PLAN

SCALE: 1'' = 50'

FOR NOTES, ABBREVIATIONS AND LEGEND, SEE SHEET TH-1

THIS PLAN ACCURATE FOR TRAFFIC HANDLING WORK ONLY

TH-3

LAST REVISION	08-05-10
DATE PLOTTED =>	16-MAR-2011
TIME PLOTTED =>	07:40

STATE OF CALIFORNIA - DEPARTMENT OF TRANSPORTATION
Caltrans® DESIGN

FUNCTIONAL SUPERVISOR: LOUIS FLAGLIANO

CALCULATED-DESIGNED BY: LOUIS FLAGLIANO
CHECKED BY: GIANG T. HA

REVISED BY: LF
DATE REVISED: 9/29/10

BORDER LAST REVISED 7/2/2010

USERNAME => s131681
DGN FILE => 0400000973md003.dgn

RELATIVE BORDER SCALE IS IN INCHES 0 1 2 3

UNIT 0698

PROJECT NUMBER & PHASE 04000009731

Dist	COUNTY	ROUTE	POST MILES TOTAL PROJECT	SHEET No.	TOTAL SHEETS
04	SCl	101	47.9/52.2	6	31

Henry Q. Gu 10/1/10
REGISTERED CIVIL ENGINEER DATE

10-25-10
PLANS APPROVAL DATE

REGISTERED PROFESSIONAL ENGINEER Henry Gu No. 17770 Exp. 6-30-11 CIVIL STATE OF CALIFORNIA

THE STATE OF CALIFORNIA OR ITS OFFICERS OR AGENTS SHALL NOT BE RESPONSIBLE FOR THE ACCURACY OR COMPLETENESS OF SCANNED COPIES OF THIS PLAN SHEET.

GENERAL NOTES

1. NO ABOVE GROUND ELECTRICAL WORK SHALL BE PERFORMED ON ANY SYSTEM WITHIN THE PROJECT SITE UNTIL ALL CONTRACTOR-FURNISHED ELECTRICAL MATERIALS FOR THAT INDIVIDUAL SYSTEM HAVE BEEN TESTED AND DELIVERED TO CONTRACTOR.
2. THE CLEARANCE BETWEEN THE BOTTOM OF THE LOWEST CIRCUIT BREAKER AND THE BOTTOM OF THE SERVICE EQUIPMENT ENCLOSURE FOR A TYPE III-A SERIES SHALL BE 24 INCHES MINIMUM
3. NO OVERHEAD SIGN PANEL SHALL BE INSTALLED UNTIL THE OVERHEAD SIGN LIGHTING IS COMPLETELY OPERATIONAL.
4. CONTACT Mr GOPAL JAGANNATH OF UTILITY DEPARTMENT OF CITY OF PALO ALTO FOR UTILITY CONNECTION (TELE: 650-566-4516).
5. AB ALL Exist CONDUITS AND RC Exist PB ON THE BRIDGE.

PROJECT NOTES

1. INSTALL TYPE III-AF SERVICE EQUIPMENT ENCLOSURE. PROVIDE EQUIPMENT ITEMS 1 TO 10 , 14 AND 28 TO 30 PER SERVICE WIRING DIAGRAM ON E-8, SEE FOUNDATION DETAILS ON ES-2D
2. 2"C, 3#2
3. Exist 2"C, 3#2
4. Exist 1½"C, 2#8
5. Exist 1½"C, 2#6
6. 1½"C, 2#8
7. Exist 1½"C, 2#6, 2#14
8. Exist 1½"C, 2#8. ADD 2#8
9. 1½"C, 2#6
10. NOT USE
11. Exist EQUIPMENT WITH NO CHANGE
12. SC BY UTILITY, COVER SHALL BE MARKED AS " CALTRANS/CPA." THIS IS A TEMINATION POINT
13. INSTALL PULL BOX PER SERVICE UTILITY REQUIREMENTS
14. 3"C, MT, DEPTH TO MEET UTILITY REQUIREMENT
15. 1B POLE WITH PEU
16. 1"C, 3#14
17. 2"C, MT
18. Exist 2"C, 1 sic. REPLACE Exist sic WITH NEW SIC
19. 2 "C, 1 SIC
20. RC Exist LIGHTING STANDARD AND INSTALL NEW TYPE 15 WITH 6' LMA LIGHTING STANDARD

INDEX OF ELECTRICAL SHEETS

DRAWING No.	TITLE
E-1	ELECTRICAL NOTES, INDEX, ABBREVIATION AND SYMBOLS
E-2~E-5	LIGHTING (CITY STREET)
E-6	LIGHTING AND SIGN ILLUMINATION (LOCATION 1)
E-7	LIGHTING AND SIGN ILLUMINATION (LOCATION 2)
E-8	ELECTRICAL DETAIL

ABBREVIATIONS

CPA	CITY OF PALO ALTO
CTID	CALTRANS IDENTIFICATION NUMBER
TOU	TIME OF USE

SYMBOLS

EXISTING	PROPOSED	
(C)	(C)	CITY ELECTROLIER

ELECTRICAL NOTES, INDEX, ABBREVIATIONS AND SYMBOLS

E-1

STATE OF CALIFORNIA - DEPARTMENT OF TRANSPORTATION
Caltrans
ELECTRICAL

FUNCTIONAL SUPERVISOR: LAI HONG CHIU
CALCULATED-DESIGNED BY: HENRY Q. GU
CHECKED BY: KENNETH Y. XU
REVISED BY: HQG
DATE REVISED: 9/28/10

LAST REVISION 08-23-10
DATE PLOTTED => 16-MAR-2011
TIME PLOTTED => 07:40

Dist	COUNTY	ROUTE	POST MILES TOTAL PROJECT	SHEET No.	TOTAL SHEETS
04	SCI	101	47.9/52.2	7	31

REGISTERED CIVIL ENGINEER 10/1/10 DATE

10-25-10
PLANS APPROVAL DATE

REGISTERED PROFESSIONAL ENGINEER Henry Gu No. 17770 Exp. 6-30-11 CIVIL STATE OF CALIFORNIA

THE STATE OF CALIFORNIA OR ITS OFFICERS OR AGENTS SHALL NOT BE RESPONSIBLE FOR THE ACCURACY OR COMPLETENESS OF SCANNED COPIES OF THIS PLAN SHEET.

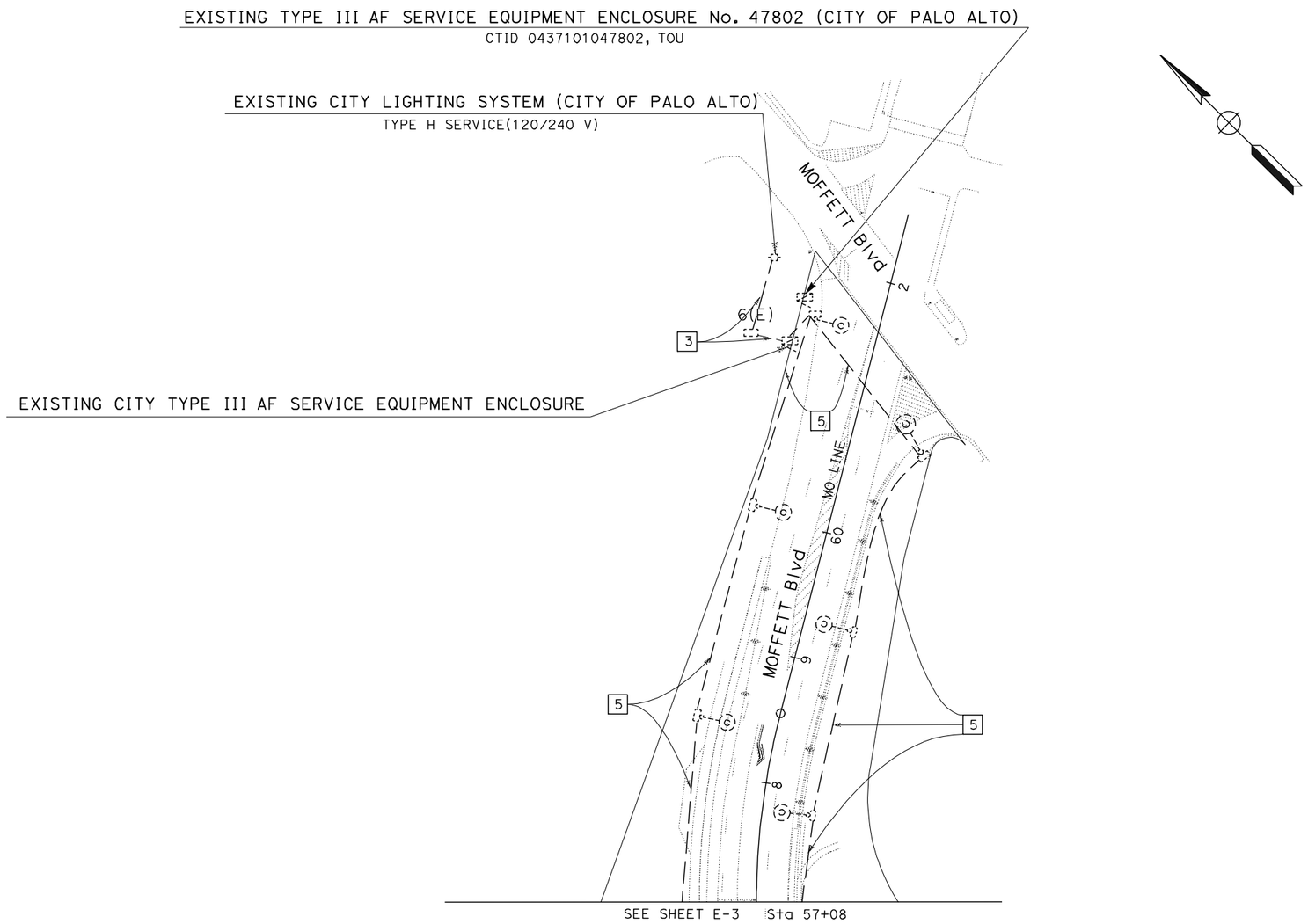

FOR NOTES, ABBREVIATIONS AND LEGEND, SEE SHEET E-1

THIS PLAN IS ACCURATE FOR ELECTRICAL WORK ONLY

LIGHTING

SCALE: 1'' = 50'

E-2

STATE OF CALIFORNIA - DEPARTMENT OF TRANSPORTATION
Caltrans
ELECTRICAL

FUNCTIONAL SUPERVISOR: LAI HONG CHIU

CALCULATED-DESIGNED BY: HENRY Q. GU
CHECKED BY: KENNETH Y. XU

REVISED BY: HQG
DATE REVISED: 9/28/10

LAST REVISION 08-05-10
DATE PLOTTED => 16-MAR-2011
TIME PLOTTED => 07:40

Dist	COUNTY	ROUTE	POST MILES TOTAL PROJECT	SHEET No.	TOTAL SHEETS
04	SCI	101	47.9/52.2	8	31

REGISTERED CIVIL ENGINEER 10/1/10 DATE

10-25-10
PLANS APPROVAL DATE

REGISTERED PROFESSIONAL ENGINEER Henry Gu No. 17770 Exp. 6-30-11 CIVIL STATE OF CALIFORNIA

THE STATE OF CALIFORNIA OR ITS OFFICERS OR AGENTS SHALL NOT BE RESPONSIBLE FOR THE ACCURACY OR COMPLETENESS OF SCANNED COPIES OF THIS PLAN SHEET.

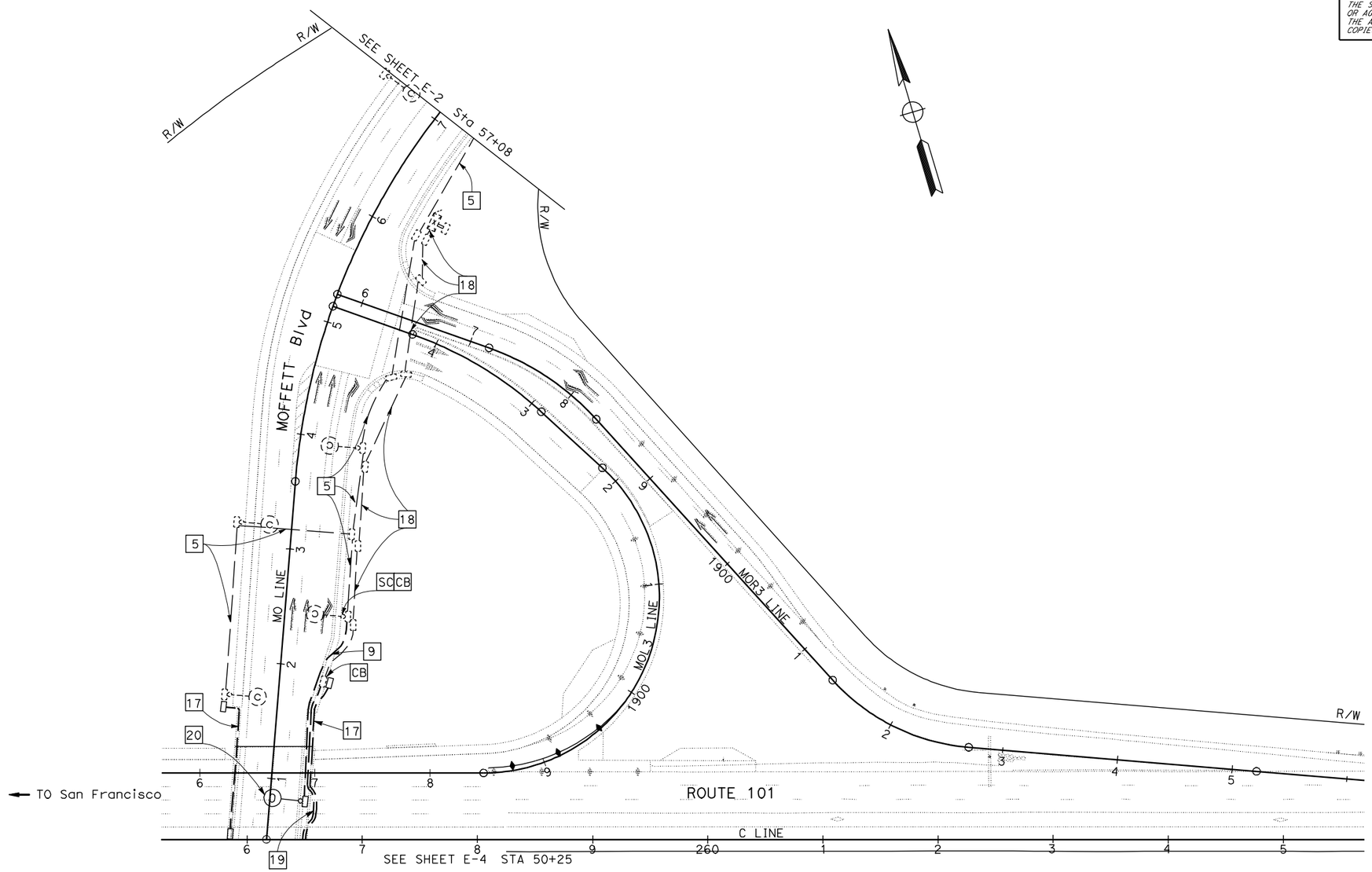

MODIFY INTERCONNECTION CONDUIT AND CABLE
MODIFY LIGHTING (CITY STREET)

LOCATION 3

SCALE: 1'' = 50'

FOR NOTES, ABBREVIATIONS AND LEGEND, SEE SHEET E-1

THIS PLAN IS ACCURATE FOR ELECTRICAL WORK ONLY

E-3

STATE OF CALIFORNIA - DEPARTMENT OF TRANSPORTATION
Caltrans
ELECTRICAL

FUNCTIONAL SUPERVISOR: LAI HONG CHIU
CALCULATED-DESIGNED BY: KENNETH Y. XU
CHECKED BY: HENRY Q. GU
REVISED BY: HQG
DATE REVISED: 9/28/10

LAST REVISION 08-23-10
DATE PLOTTED => 16-MAR-2011
TIME PLOTTED => 07:40

Dist	COUNTY	ROUTE	POST MILES TOTAL PROJECT	SHEET No.	TOTAL SHEETS
04	SCI	101	47.9/52.2	9	31

REGISTERED CIVIL ENGINEER 10/1/10 DATE

10-25-10
PLANS APPROVAL DATE

REGISTERED PROFESSIONAL ENGINEER Henry Gu No. 17770 Exp. 6-30-11 CIVIL STATE OF CALIFORNIA

THE STATE OF CALIFORNIA OR ITS OFFICERS OR AGENTS SHALL NOT BE RESPONSIBLE FOR THE ACCURACY OR COMPLETENESS OF SCANNED COPIES OF THIS PLAN SHEET.

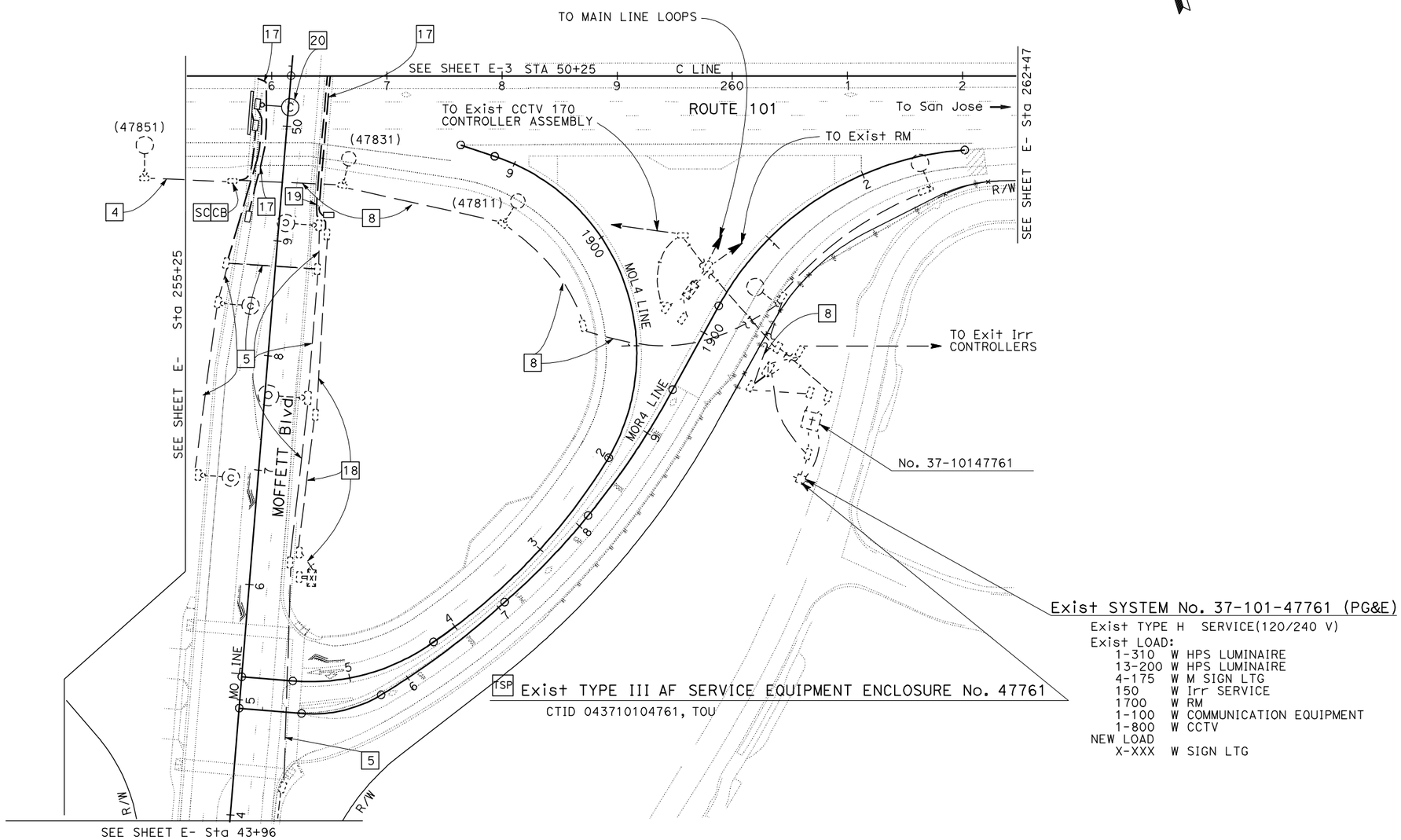

MODIFY INTERCONNECTION CONDUIT AND CABLE
MODIFY LIGHTING (CITY STREET)
LOCATION 3

SCALE: 1'' = 50'

FOR NOTES, ABBREVIATIONS AND LEGEND, SEE SHEET E-1

THIS PLAN IS ACCURATE FOR ELECTRICAL WORK ONLY

E-4

REVISED BY	HQG
DATE REVISED	9/28/10
CALCULATED-DESIGNED BY	HENRY Q. GU
CHECKED BY	KENNETH Y. XU
FUNCTIONAL SUPERVISOR	LAI HONG CHIU

STATE OF CALIFORNIA - DEPARTMENT OF TRANSPORTATION
Caltrans
ELECTRICAL

LAST REVISION 08-23-10
DATE PLOTTED => 16-MAR-2011
TIME PLOTTED => 07:40

Dist	COUNTY	ROUTE	POST MILES TOTAL PROJECT	SHEET No.	TOTAL SHEETS
04	SCI	101	47.9/52.2	10	31

REGISTERED CIVIL ENGINEER 10/1/10 DATE

10-25-10
PLANS APPROVAL DATE

REGISTERED PROFESSIONAL ENGINEER Henry Gu No. 17770 Exp. 6-30-11 CIVIL STATE OF CALIFORNIA

THE STATE OF CALIFORNIA OR ITS OFFICERS OR AGENTS SHALL NOT BE RESPONSIBLE FOR THE ACCURACY OR COMPLETENESS OF SCANNED COPIES OF THIS PLAN SHEET.

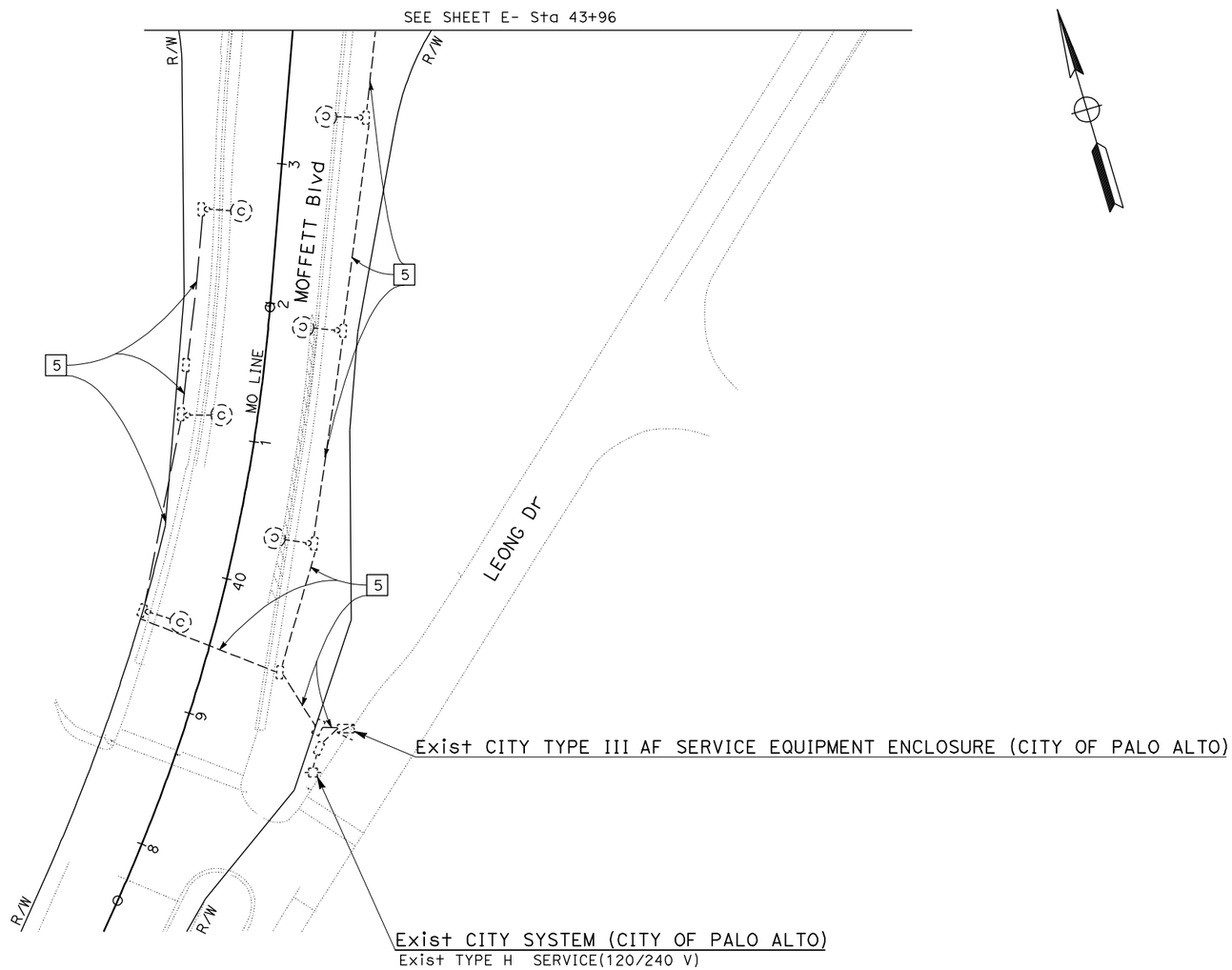

MODIFY INTERCONNECTION CONDUIT AND CABLE
MODIFY LIGHTING (CITY STREET)

LOCATION 3

SCALE: 1'' = 50'

FOR NOTES, ABBREVIATIONS AND LEGEND, SEE SHEET E-1

THIS PLAN IS ACCURATE FOR ELECTRICAL WORK ONLY

E-5

CALCULATED-DESIGNED BY	KENNETH Y. XU	REVISED BY	HQG
CHECKED BY	HENRY Q. GU	DATE REVISED	9/28/10
FUNCTIONAL SUPERVISOR	LAI HONG CHIU		

STATE OF CALIFORNIA - DEPARTMENT OF TRANSPORTATION
Caltrans
ELECTRICAL

LAST REVISION 08-23-10 | DATE PLOTTED => 16-MAR-2011 | TIME PLOTTED => 07:41

Dist	COUNTY	ROUTE	POST MILES TOTAL PROJECT	SHEET No.	TOTAL SHEETS
04	SCI	101	47.9/52.2	11	31

REGISTERED CIVIL ENGINEER — DATE 10/1/10

PLANS APPROVAL DATE 10-25-10

REGISTERED PROFESSIONAL ENGINEER — Henry Gu — No. 17770 — Exp. 6-30-11 — CIVIL — STATE OF CALIFORNIA

THE STATE OF CALIFORNIA OR ITS OFFICERS OR AGENTS SHALL NOT BE RESPONSIBLE FOR THE ACCURACY OR COMPLETENESS OF SCANNED COPIES OF THIS PLAN SHEET.

NOTE:

FOR ACCURATE RIGHT OF WAY DATA, CONTACT RIGHT OF WAY ENGINEERING AT THE DISTRICT OFFICE.

Exist SYSTEM No. 37-101-50532 (CITY OF PALO ALTO)

UNDERGROUND SERVICE(120/240 V)
LOAD:
19-200 W HPS LUMINAIRES
12-175 W INDUCTION SIGH LIGHT FIXTURES

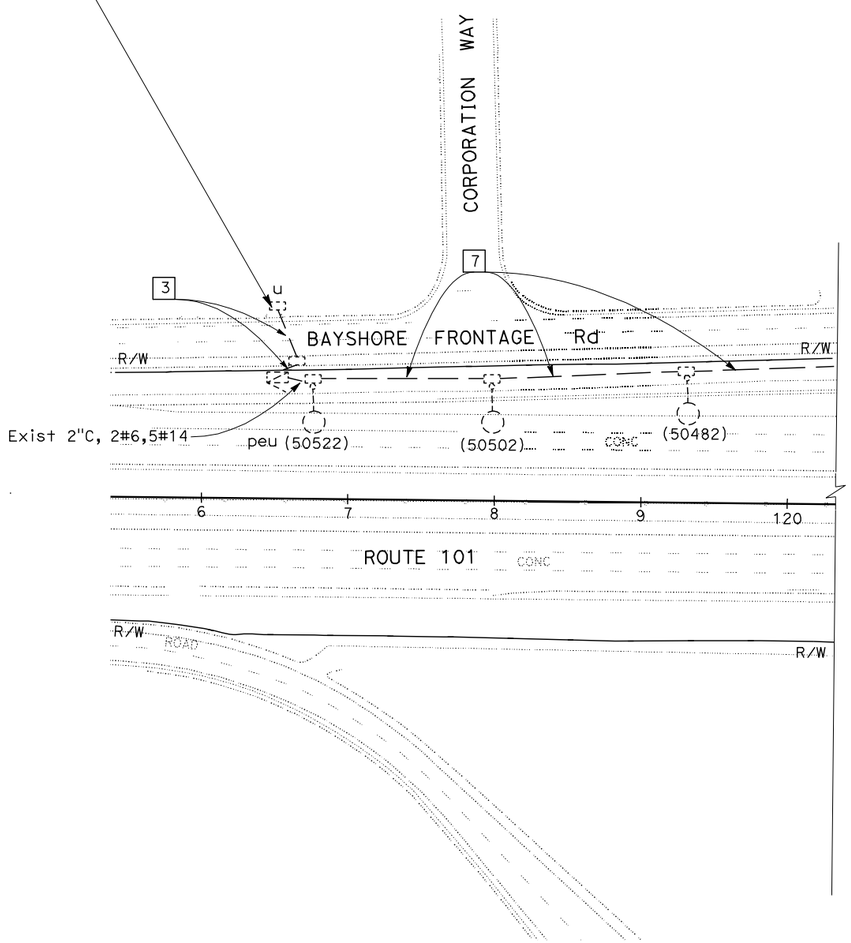

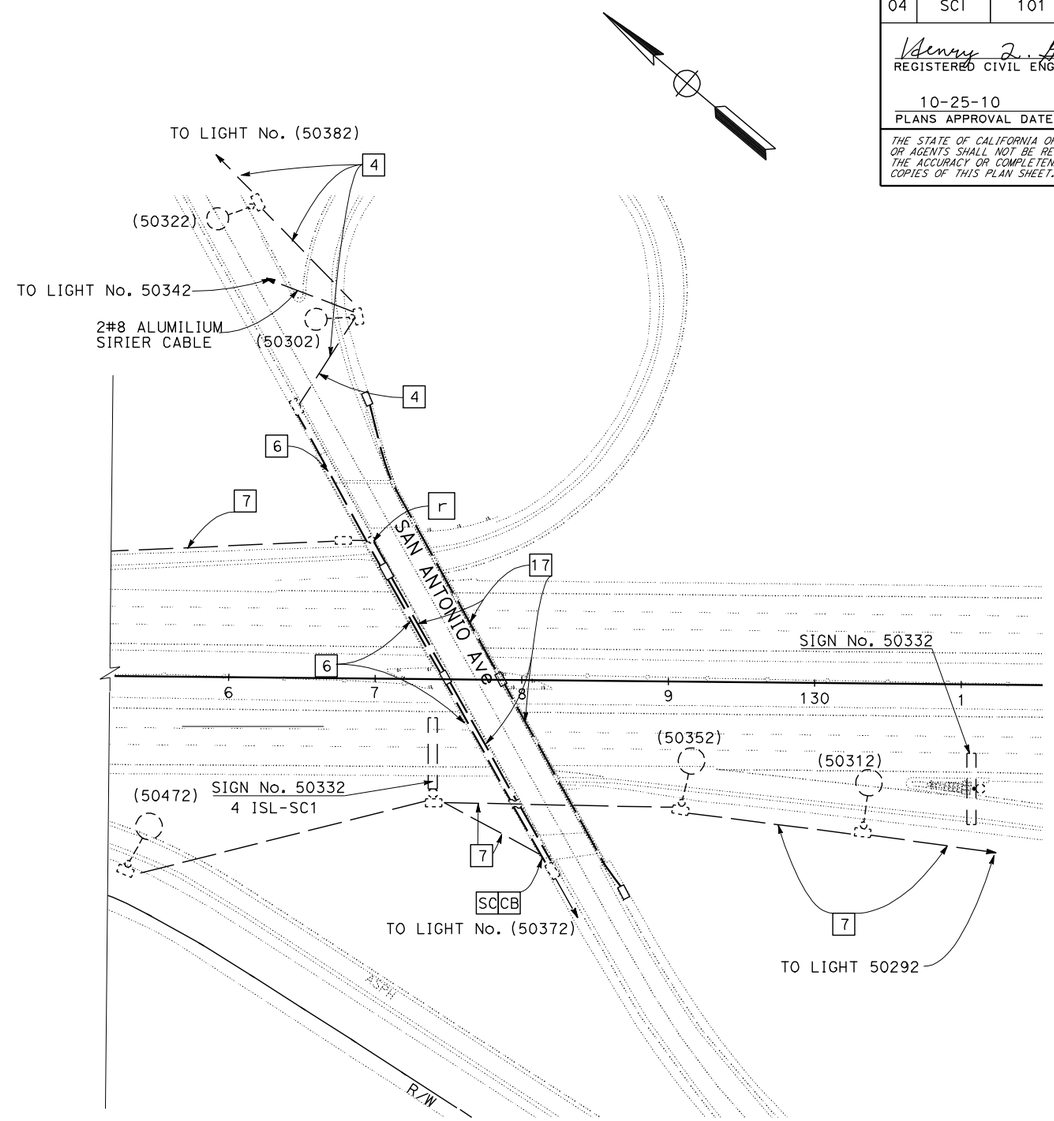

LIGHTING AND SIGN ILLUMINATION

(LOCATION 2)

ROUTE 101/SAN ANTONIO Ave

SCALE: 1'' = 50'

FOR NOTES, ABBREVIATIONS AND LEGEND, SEE SHEET E-I

THIS PLAN IS ACCURATE FOR ELECTRICAL WORK ONLY

E-6

REVISED BY	DATE REVISED
HQG	9/28/10

HENRY Q. GU — KENNETH Y. XU — CALCULATED-DESIGNED BY — CHECKED BY

FUNCTIONAL SUPERVISOR: LAI HONG CHIU

STATE OF CALIFORNIA - DEPARTMENT OF TRANSPORTATION — Caltrans — ELECTRICAL

LAST REVISION 08-23-10 — DATE PLOTTED => 16-MAR-2011 — TIME PLOTTED => 07:41

Dist	COUNTY	ROUTE	POST MILES TOTAL PROJECT	SHEET No.	TOTAL SHEETS
04	SCI	101	47.9/52.2	12	31

REGISTERED CIVIL ENGINEER 10/1/10 DATE

10-25-10
PLANS APPROVAL DATE

REGISTERED PROFESSIONAL ENGINEER Henry Gu No. 17770 Exp. 6-30-11 CIVIL STATE OF CALIFORNIA

THE STATE OF CALIFORNIA OR ITS OFFICERS OR AGENTS SHALL NOT BE RESPONSIBLE FOR THE ACCURACY OR COMPLETENESS OF SCANNED COPIES OF THIS PLAN SHEET.

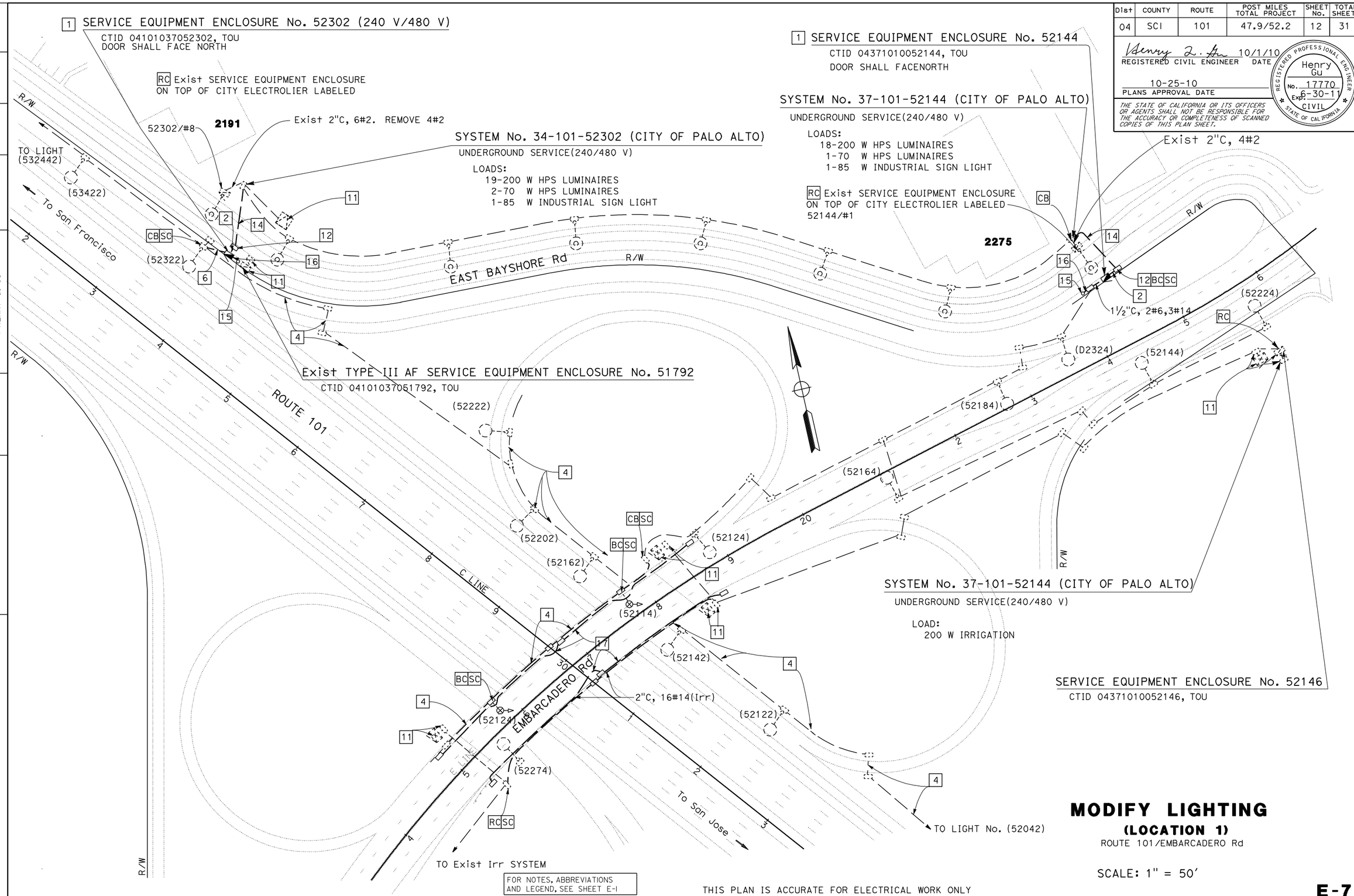

FOR NOTES, ABBREVIATIONS AND LEGEND, SEE SHEET E-1

THIS PLAN IS ACCURATE FOR ELECTRICAL WORK ONLY

MODIFY LIGHTING
(LOCATION 1)
ROUTE 101/EMBARCADERO Rd

SCALE: 1" = 50'

E-7

CALCULATED-DESIGNED BY	CHECKED BY	REVISED BY	DATE REVISED
KENNETH Y. XU	HENRY Q. GU	HQG	9/28/10

FUNCTIONAL SUPERVISOR: LAI HONG CHIU

STATE OF CALIFORNIA - DEPARTMENT OF TRANSPORTATION
Caltrans
ELECTRICAL

LAST REVISION 08-23-10 | DATE PLOTTED => 16-MAR-2011 | TIME PLOTTED => 07:41

Dist	COUNTY	ROUTE	POST MILES TOTAL PROJECT	SHEET No.	TOTAL SHEETS
04	SCI	101	47.9/52.2	13	31

REGISTERED CIVIL ENGINEER 10/1/10 DATE

10-25-10
PLANS APPROVAL DATE

REGISTERED PROFESSIONAL ENGINEER Henry Gu No. 17770 Exp. 6-30-11 CIVIL STATE OF CALIFORNIA

THE STATE OF CALIFORNIA OR ITS OFFICERS OR AGENTS SHALL NOT BE RESPONSIBLE FOR THE ACCURACY OR COMPLETENESS OF SCANNED COPIES OF THIS PLAN SHEET.

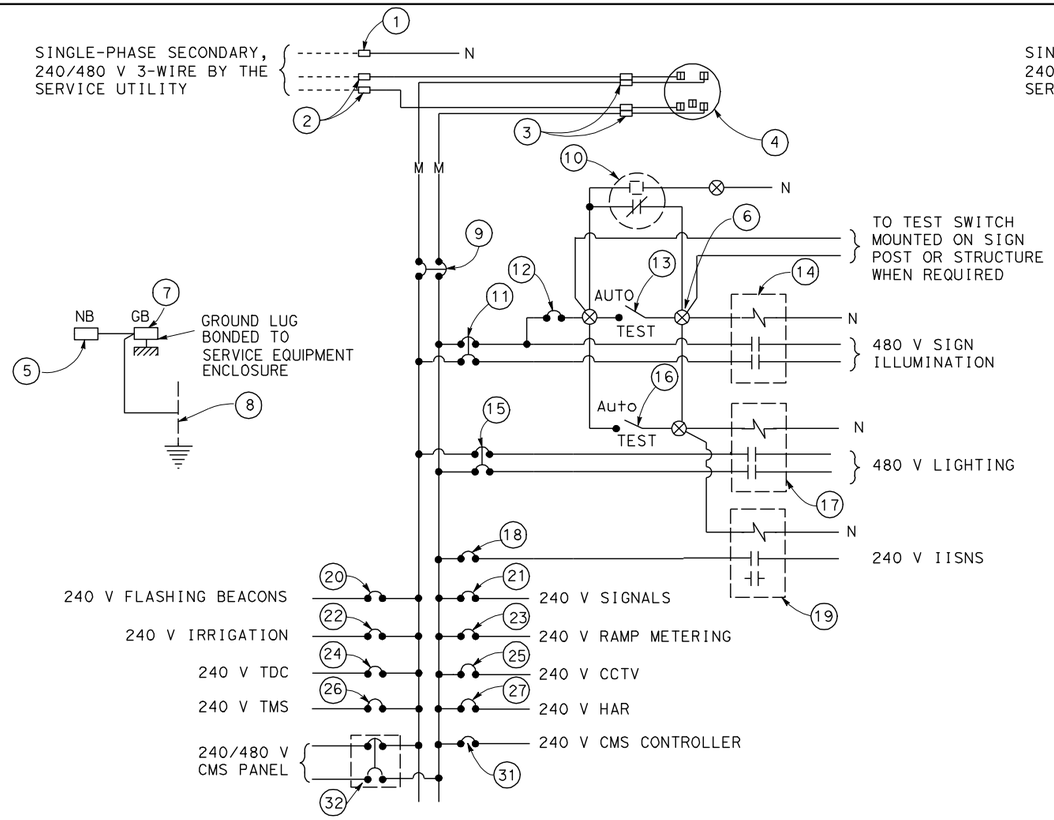

240/480 V SERVICE WIRING DIAGRAM (TYPICAL)

(FOR CIRCUITS WITH BOTH SIGN ILLUMINATION AND LIGHTING)

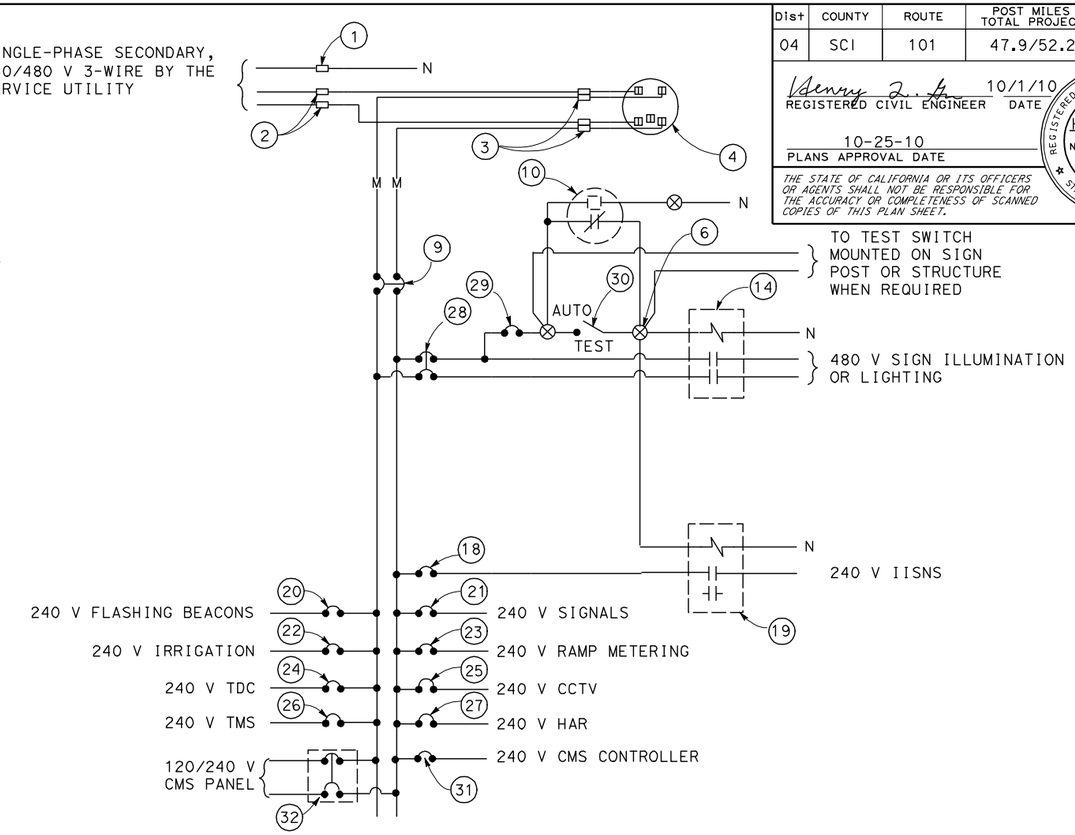

240/480 V SERVICE WIRING DIAGRAM (TYPICAL)

(FOR CIRCUIT ONLY WITH SIGN ILLUMINATION OR LIGHTING)

LEGEND:

(SEE ES-1A & ES-1C)

TYPE III-A SERVICE (240/480 V) EQUIPMENT LEGEND

ITEM No.	COMPONENT	NAMEPLATE DESCRIPTION
1	NEUTRAL LUG	
2	LANDING LUG	
3	TEST BYPASS FACILITY	
4	METER SOCKET AND SUPPORT	
5	NEUTRAL BUS	
6	TERMINAL BLOCK	
7	GROUND BUS	
8	GROUNDING ELECTRODE	
9	100 A, 480 V, 2P, CB	MAIN BREAKER
10	PHOTOELECTRIC UNIT (NOTE 7)	
11	30 A, 480 V, 2P, CB	SIGN ILLUMINATION
12	15 A, 240 V, 1P, CB	SIGN ILLUMINATION AND LIGHTING CONTROL
13	15 A, 1P, TEST SWITCH	SIGN ILLUMINATION TEST SWITCH
14	30 A, 2PNO, CONTACTOR	SIGN ILLUMINATION*
15	30 A, 480 V, 2P, CB	LIGHTING
16	15 A, 1P, TEST SWITCH	LIGHTING TEST SWITCH

ITEM No.	COMPONENT	NAMEPLATE DESCRIPTION
17	30 A, 2PNO, CONTACTOR	LIGHTING
18	15 A, 240 V, 1P, CB	IISNS
19	30 A, 2PNO, CONTACTOR	IISNS
20	15 A, 240 V, 1P, CB	FLASHING BEACON
21	50 A, 240 V, 1P, CB	SIGNALS
22	20 A, 240 V, 1P, CB	IRRIGATION
23	30 A, 240 V, 1P, CB	RAMP METERING
24	15 A, 240 V, 1P, CB	TELEPHONE DEMARCATION CABINET
25	30 A, 240 V, 1P, CB	CCTV
26	30 A, 240 V, 1P, CB	TMS
27	30 A, 240 V, 1P, CB	HAR
28	30 A, 480 V, 2P, CB	SIGN ILLUMINATION *
29	15 A, 240 V, 1P, CB	SIGN ILLUMINATION CONTROL *
30	15 A, 1P, TEST SWITCH	SIGN ILLUMINATION TEST SWITCH *
31	30 A, 240 V, 1P, CB	CMS CONTROLLER
32	30 A, 480 V, 2P, CB	CMS PANEL

* FOR LIGHTING CIRCUIT, WORDS OF "SIGN ILLUMINATION" IN NAMEPLATE DESCRIPTION SHALL BE CHANGED TO "LIGHTING".

NOTES: (FOR SERVICE EQUIPMENT)

1. VOLTAGE RATINGS OF SERVICE EQUIPMENT SHALL CONFORM TO THE SERVICE VOLTAGES INDICATED ON THE PLANS.
2. UNLESS OTHERWISE INDICATED ON THE PLANS, ALL SERVICE EQUIPMENT ITEMS SHALL BE PROVIDED FOR EACH SERVICE EQUIPMENT ENCLOSURE AS SHOWN.
3. ITEM NO. 1 AND 5 SHALL BE ISOLATED FROM THE CABINET.
4. METER SOCKETS SHALL BE 5 CLIP TYPE.
5. SERVICE UTILITY WILL INSTALL THE TIME-OF-USE METER IF APPLICABLE
6. UNLESS OTHERWISE NOTED, NO MORE THAN FOURTEEN 1P, CB CAN BE INSTALLED IN THE ENCLOSURE.
7. PHOTOELECTRIC CONTROL SHALL BE TYPE II.

ELECTRICAL DETAILS

(SERVICE EQUIPMENT AND TYPICAL WIRING DIAGRAM TYPE III-A SERIES)

NO SCALE

E-8

REVISED BY	DATE REVISED
HQG	9/28/10

CALCULATED-DESIGNED BY	CHECKED BY
HENRY Q. GU	KENNETH Y. XU

FUNCTIONAL SUPERVISOR: LAI HONG CHIU

STATE OF CALIFORNIA - DEPARTMENT OF TRANSPORTATION

Caltrans®

ELECTRICAL

LAST REVISION 08-06-10 | DATE PLOTTED => 16-MAR-2011 | TIME PLOTTED => 07:41

DIST	COUNTY	ROUTE	POST MILES TOTAL PROJECT	SHEET NO.	TOTAL SHEETS
04	SCI	101	47.9/52.2	14	31

REGISTERED CIVIL ENGINEER

October 5, 2007
PLANS APPROVAL DATE

REGISTERED PROFESSIONAL ENGINEER Efthymios Delis No. C51434 Exp. 6-30-08 CIVIL STATE OF CALIFORNIA

The State of California or its officers or agents shall not be responsible for the accuracy or completeness of electronic copies of this plan sheet.

To accompany plans dated 10-25-10

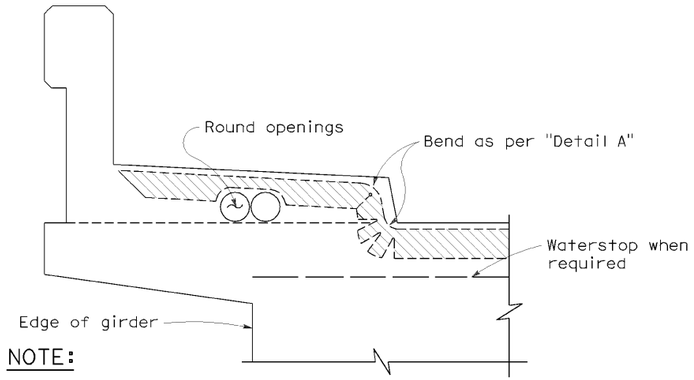

NOTE:

Type "B" seal shown. Type "A" seals to comform to the general path of seal shown, cuts for bending not required. Bend Type "A" seals 3" up into curb or barrier rail on only the low end of the seal.

CONCRETE BARRIER AND SIDEWALK

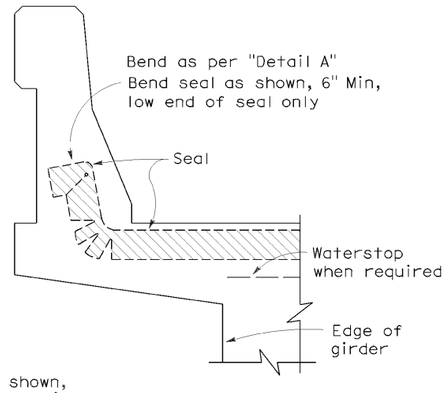

CONCRETE BARRIER

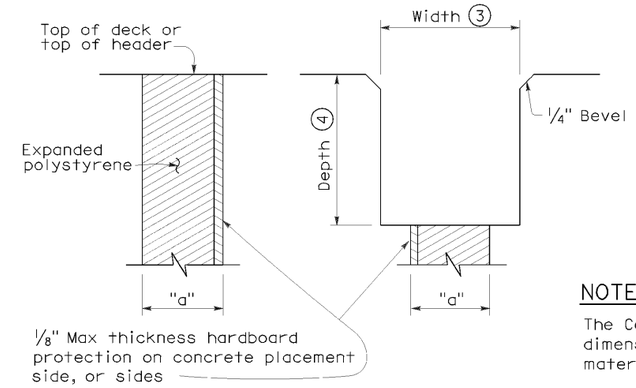

FORMING DETAIL SAWCUT DETAIL

NOTE:

The Contractor shall verify all controlling field dimensions before ordering or fabricatiing any material.

JOINT SEALS DETAILS

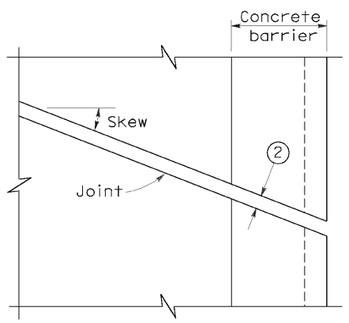

PLAN OF JOINT (SKEW ≤ 20°)

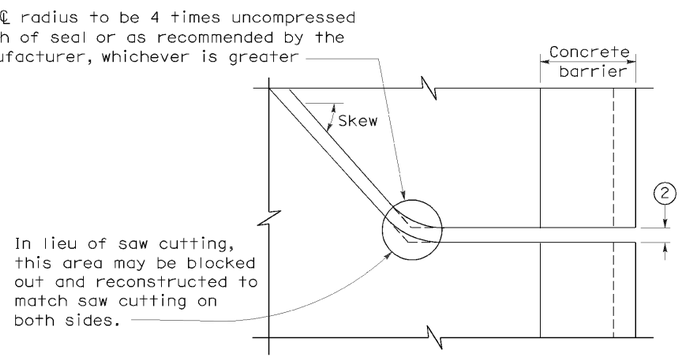

PLAN OF JOINT (SKEW > 20°)

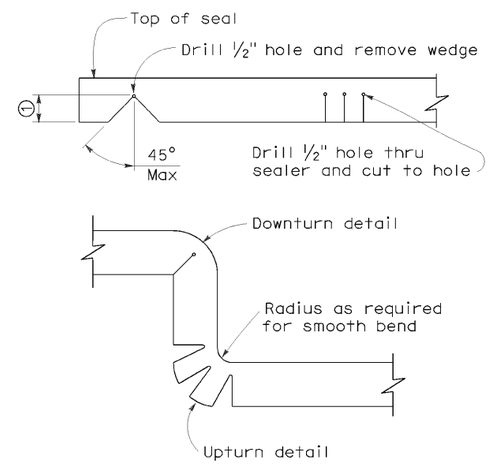

DETAIL A

NOTES:

1. Make smooth cuts from the bottom of seal to 1½" clear of top leaving at least one complete cell between the top of the cut and top of the seal. When necessary cut back of seal to clear conduit and round openings.
2. Opening in barrier to match width of sawn deck joint.
3. Sawcut groove widths shall be as ordered by the Engineer.
4. Depth of sawcut: Type A - Depth to be 2" minimum.
   Type B - Depth to be equal to or greater than the depth of seal measured along the contact surface, when compressed to minimum width position (W_2) plus dimensions shown.
5. MR (movement rating) as shown on other plan sheets.
6. Other depths must be approved by the Engineer.

DIMENSIONS "a" OF JOINT REQUIRED

Movement Rating (MR) (5)	Bridge Type	"a" Dimension Deck Concrete Placed		
		Winter	Fall-Spring	Summer
2"	All except CIP/PS	1½"	1¼"	¾"
	CIP/PS	1¼"	1"	½"
1½"	All except CIP/PS	1¼"	1"	½"
	CIP/PS	1"	¾"	½"
1"	All except CIP/PS	1"	¾"	½"
	CIP/PS	¾"	½"	½"
½"	All except CIP/PS	¾"	¾"	½"
	CIP/PS	½"	½"	½"

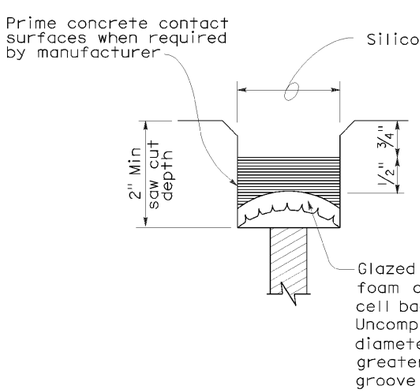

TYPE A SEAL

Movement rating : Silicone = 1" Max

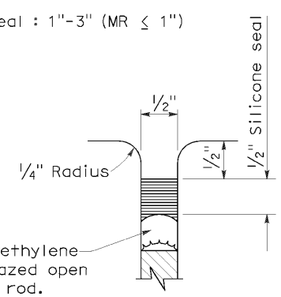

TYPE AL SEAL

Longitudinal joints only

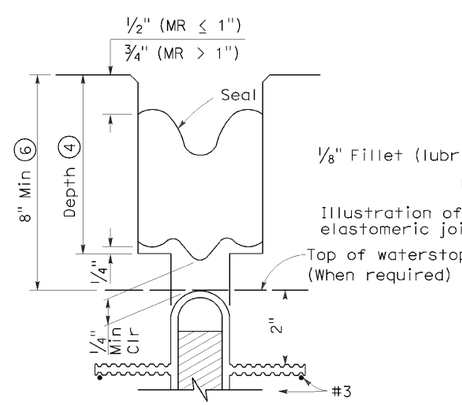

TYPE B JOINT SEAL
IN MINIMUM WIDTH POSITION (W_2)

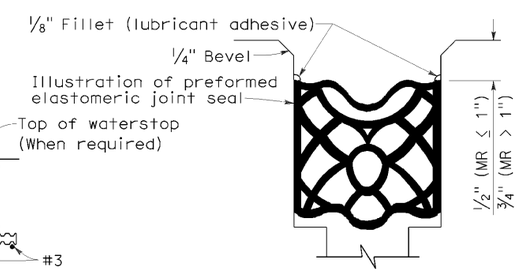

TYPE B SEAL

Movement Rating ≤ 2"

STATE OF CALIFORNIA
DEPARTMENT OF TRANSPORTATION

JOINT SEALS (MAXIMUM MOVEMENT RATING = 2")

NO SCALE

RSP B6-21 DATED OCTOBER 5, 2007 SUPERSEDES STANDARD PLAN B6-21
DATED MAY 1, 2006 - PAGE 258 OF THE STANDARD PLANS BOOK DATED MAY 2006.

REVISED STANDARD PLAN RSP B6-21

2006 REVISED STANDARD PLAN RSP B6-21

5-8-07

DIST	COUNTY	ROUTE	POST MILES TOTAL PROJECT	SHEET NO.	TOTAL SHEETS
04	SCI	101	47.9/52.2	15	31

REGISTERED ELECTRICAL ENGINEER

October 5, 2007
PLANS APPROVAL DATE

REGISTERED PROFESSIONAL ENGINEER
Jeffery G. McRae
No. E14512
Exp. 6-30-08
ELECTRICAL
STATE OF CALIFORNIA

The State of California or its officers or agents shall not be responsible for the accuracy or completeness of electronic copies of this plan sheet.

To accompany plans dated 10-25-10

ELECTROLIERS

STANDARD TYPES
15, 15D
15 STRUCTURE
21, 21D STRUCTURE
30
31
32
35
36-20A

High mast light pole

Double Arm lighting standard

Existing electrolier

Electrolier foundation (Future installation)

NOTES:

1. Luminaires shall be 310 W HPS when installed on Type 21, 21D, 30, 31, 32, 35 and 36-20A Standards, unless otherwise specified. Luminaires shall be 200 W HPS when installed on other type standards or poles, unless otherwise specified.
2. Luminaires shall be the cutoff type, ANSI Type III medium cutoff lighting distribution, unless otherwise specified.
3. Variations noted adjacent to symbol on project plans.

Electrolier (see project notes or project plans)

Luminaire on wood pole

STANDARD NOTES:

- AB — Abandon. If applied to conduit, remove conductors.
- BC — Install pull box in existing conduit run.
- BP — Pedestrian barricade, type as indicated on plan.
- CB — Install conduit into existing pull box.
- CC — Connect new and existing conduit. Remove existing conductors and install conductors as indicated.
- CF — Conduit to remain for future use. Remove conductors. Install pull wire or rope.
- DH — Detector handhole.
- FA — Foundation to be abandoned.
- IS — Install sign on signal mast arm.
- NS — No slip base on standard.
- PEC — Photoelectric control.
- PEU — Photoelectric unit.
- RC — Equipment or material to be removed and become the property of the Contractor.
- RE — Remove electrolier, fuses and ballast. Tape ends of conductors.
- RL — Relocate equipment.
- RR — Remove and reuse equipment.
- RS — Remove and salvage equipment.
- SC — Splice new to existing conductors.
- SD — Service disconnect.
- SF — Standard to remain for future use. Remove luminaire, pole conductors, fuses and ballast.
- TSP — Telephone service point.

ABBREVIATIONS AND EQUIPMENT DESIGNATIONS

PROPOSED	EXISTING	
BBS	bbs	Battery backup system
BC	bc	Bolt circle
C	C	Conduit
CCTV	cctv	Closed circuit television
CKT	ckt	Circuit
CMS	cms	Changeable message sign
DLC	dlc	Loop detector lead-in cable
EMS	ems	Extinguishable message sign
EVC	evc	Emergency vehicle cable
EVD	evd	Emergency vehicle detector
FB	fb	Flashing beacon
FBCA	fbca	Flashing beacon control assembly
FBS	fbs	Flashing beacon with slip base
FO	fo	Fiber optic
G	G	Ground (Equipment Grounding Conductor)
GFCI	GFCI	Ground fault circuit interrupt
HAR	har	Highway advisory radio
HEX	hex	Hexagonal
HPS	hps	High pressure sodium
IISNS	iisns	Internally illuminated street name sign
ISL	isl	Induction sign lighting
LED	led	Light emitting diode
LMA	lma	Luminaire mast arm
LPS	lps	Low pressure sodium
LTG	ltg	Lighting
LUM	lum	Luminaire
MAT	mat	Mast arm mounting vehicle signal faces, top attachment
MAS	mas	Mast arm mounting vehicle signal faces, side attachment
MAS-4A MAS-4B MAS-4C	mas-4A mas-4B mas-4C	Mast arm mounting vehicle signal faces, side attachment - 4 signal section
MAS-5A MAS-5B	mas-5A mas-5B	Mast arm mounting vehicle signal faces, side attachment - 5 signal section
MC	mc	Mercury contactor
M/M	m/m	Multiple to multiple transformer
MT	mt	Conduit with pull wire or rope only
MTG	mtg	Mounting
	mv	Mercury vapor lighting fixture
N	N	Neutral (Grounded Conductor)
NC	NC	Normally closed
NO	NO	Normally open
PB	pb	Pull box
PEC	pec	Photoelectric control (Type I, II, III, IV or V as shown)
PED	ped	Pedestrian
PEU	peu	Photoelectric unit
PPB	ppb	Pedestrian push button
RL		Relocated equipment
RM	rm	Ramp metering
SB	sb	Slip base
SIC	sic	Signal interconnect cable
SIG	sig	Signal
SMA	sma	Signal mast arm
SNS	sns	Street name sign
SP	sp	Service point
TDC	tdc	Telephone demarcation cabinet
TMS	tms	Traffic monitoring station
TOS	tos	Traffic Operations System
VEH	veh	Vehicle
XFMR	xfmr	Transformer
COMM	comm	Communication
RWIS	rwis	Roadway weather information system

SOFFIT AND WALL MOUNTED LUMINAIRES

Pendant, 70 W HPS unless otherwise specified.

Flush, 70 W HPS unless otherwise specified.

Wall surface, 70 W HPS unless otherwise specified.

Existing soffit or wall luminaire to remain unmodified.

Existing soffit or wall luminaire to be modified as specified.

NOTE:

Arrow indicates "street side" of luminaire.

STATE OF CALIFORNIA
DEPARTMENT OF TRANSPORTATION

ELECTRICAL SYSTEMS (SYMBOLS AND ABBREVIATIONS)

NO SCALE

RSP ES-1A DATED OCTOBER 5, 2007 SUPERSEDES STANDARD PLAN ES-1A DATED MAY 1, 2006 - PAGE 400 OF THE STANDARD PLANS BOOK DATED MAY 2006.

REVISED STANDARD PLAN RSP ES-1A

2006 REVISED STANDARD PLAN RSP ES-1A

7-10-07

DIST	COUNTY	ROUTE	POST MILES TOTAL PROJECT	SHEET NO.	TOTAL SHEETS
04	SCI	101	47.9/52.2	16	31

REGISTERED ELECTRICAL ENGINEER

October 5, 2007
PLANS APPROVAL DATE

REGISTERED PROFESSIONAL ENGINEER Jeffery G. McRae No. E14512 Exp. 6-30-08 ELECTRICAL STATE OF CALIFORNIA

The State of California or its officers or agents shall not be responsible for the accuracy or completeness of electronic copies of this plan sheet.

To accompany plans dated 10-25-10

CONDUIT

PROPOSED	EXISTING	
		Lighting Conduit, unless otherwise indicated or noted
		Traffic signal conduit
C	c	Communication conduit
T	t	Telephone conduit
F	f	Fire alarm conduit
FO	fo	Fiber optic conduit
		Conduit termination (RSP ES-9A C)
R	r	Conduit riser in/on structure or service pole

SERVICE EQUIPMENT

PROPOSED	EXISTING	
OH	oh	Overhead lines
U	U	Wood pole "U" indicates utility owned
		Pole guy with anchor
		Utility transformer - ground mounted
III		Service equipment enclosure type
		Service equipment enclosure door indicates front of enclosure
T	t	Telephone demarcation cabinet

POLE-MOUNTED SERVICE DESIGNATION

TYPE H SERVICE - 28'-10"

Type of installation

Pole height above grade

ILLUMINATED OVERHEAD SIGN

PROPOSED	EXISTING	
		Overhead sign - Single post
		Overhead sign - Two post
		Overhead sign - Mounted on structure
		Overhead sign with electrolier

SIGNAL EQUIPMENT

PROPOSED	EXISTING	
		Pedestrian signal face
		Pedestrian push button post
		Pedestrian barricade
		Vehicle signal face (with backplate, 3-Section: red, yellow and green)
		Vehicle signal face with angle visors
PV	PV	Modifications of basic symbols: "L" Indicates all non-arrow sections louvered "LG" Indicates louvered green section only "PV" Indicates 12" programmed visibility sections "8" indicates all 8" sections (only when specified)
		Type 15TS and Vehicle signal face
		Vehicle signal face with red, yellow and green left arrow sections
		Vehicle signal face with red and yellow sections and up green arrow
		Vehicle signal face (5 Section) with red, yellow and green sections and yellow and green right arrows
		Type 1 Standard and attached vehicle signal faces
		Standard with signal mast arm only and attached vehicle signal faces and internally illuminated street name sign
		Type 33 Standard, Left-turn vehicle signal face and sign
		Standard with luminaire and signal mast arms and attached vehicle signal faces
		Cantilever flashing beacon Type 9 Frame, with a sign unless otherwise specified or indicated
		Type 15-FBS Standard with two vehicle signal face sections with lens, backplate and visor with a sign
R	Y	Flashing beacon. One vehicle signal face section with lens, backplate and visor. "R" indicates red indication, "Y" indicates yellow indication
		Controller assembly. Door indicates front of cabinet

SIGNAL EQUIPMENT Cont

PROPOSED	EXISTING	
		Guard post
		Type 1 Standard with "Meter On" sign
		Emergency Vehicle detector

NOTES:

1. All signal sections shall be 12" unless shown otherwise.
2. Signal heads shall be provided with backplates unless shown otherwise.
3. Signal indication shall be LED.

STATE OF CALIFORNIA
DEPARTMENT OF TRANSPORTATION

ELECTRICAL SYSTEMS (SYMBOLS AND ABBREVIATIONS)

NO SCALE

RSP ES-1B DATED OCTOBER 5, 2007 SUPERCEDES STANDARD PLAN ES-1B DATED MAY 1, 2006 - PAGE 401 OF THE STANDARD PLANS BOOK DATED MAY 2006.

REVISED STANDARD PLAN RSP ES-1B

2006 REVISED STANDARD PLAN RSP ES-1B

7-10-07

DIST	COUNTY	ROUTE	POST MILES TOTAL PROJECT	SHEET NO.	TOTAL SHEETS
04	SCI	101	47.9/52.2	17	31

REGISTERED ELECTRICAL ENGINEER

October 5, 2007
PLANS APPROVAL DATE

The State of California or its officers or agents shall not be responsible for the accuracy or completeness of electronic copies of this plan sheet.

REGISTERED PROFESSIONAL ENGINEER
Jeffery G. McRae
No. E14512
Exp. 6-30-08
ELECTRICAL
STATE OF CALIFORNIA

To accompany plans dated 10-25-10

EQUIPMENT IDENTIFICATION

ILLUMINATED SIGN IDENTIFICATION NUMBER:

Sign No. 12345 — Sign number - Place on post or structure

10 ISL SCI 1.0

- 1.0 — Transformer rating (kVA)
- SCI — Lighting control type
- 10 ISL — Number and type of fixtures

Do NOT place on standard or structure

ELECTROLIER OR EQUIPMENT IDENTIFICATION NUMBER:

12345 - 15'-0"

- 15'-0" — Mast arm length, if shown. Do not place on standard or structure.
- 12345 — Equipment number - Place on standard or structure. Existing equipment numbers are shown in parenthesis

CONDUIT AND CONDUCTOR IDENTIFICATION:

1½"C, 2#10, 15#14, 2 DLC

- 2#10, 15#14, 2 DLC — Number and size of conductors and cables
- 1½"C — Size of conduit in inches

ø1, ø2, ø2P, etc.	Traffic phase identification for signal faces, detectors and phase diagrams
1 2 3	Project note numbers
A B C	Equipment description, installation or item numbers
1 2 3	Conduit run numbers

SIGNAL AND LIGHTING STANDARD (TYPICAL DESIGNATION):

19A - 3 - 100

- 100 — Wind velocity = 100 mph
- 3 — Case 3 arm loading
- 19A — Standard type
- Standard Plan sheet number
- Detail number or letter

MISCELLANEOUS EQUIPMENT

PROPOSED	EXISTING	
CMS	cms	Changeable message sign
		Closed circuit television camera
		Highway advisory radio pole and antenna
EMS	ems	Extinguishable message sign
M V	m v	Detection device M = Microwave sensor V = Video image sensor

WIRING DIAGRAM LEGEND

P	Pole
CB	Circuit breaker
A	Ampere
V	Volt
M	Metered
UM	Unmetered
NB	Neutral bus
GB	Ground bus
G	Equipment grounding conductor
N	Grounded conductor (Neutral)

- External conductor
- Conductor or bus
- Tie point
- Contactor coil
- Contactor, Contact NO
- Terminal blocks
- Contactor, Contact NC
- Enclosure bond
- Grounding electrode
- Circuit breaker
- Receptacle

PULL BOXES

PROPOSED	EXISTING	
		Pull box-No. 5 unless otherwise indicated or noted.
3	9A(21)	Pull box-Additional designations or descriptions

3 = No. 3½ pull box
5 = No. 5 pull box
6 = No. 6 pull box
7 = No. 7 (Ceiling pull box)
8 = No. 8 (Pendant soffit pull box)
9 = No. 9 pull box
9A = No. 9A pull box

(C) = Communications pull box
(E) = Pull box with extension
(S) = Sprinkler control pull box
(21) = Anchor bolts and conduit for future installation of Type 21 Standard
(T) = Traffic pull box

VEHICLE DETECTORS

5 J 9 U

- U — U = Upper, L = Lower
- 9 — Slot number in input file
- J — Input file (I or J)
- 5 — Phase

PROPOSED	EXISTING	
		Type A detector loop. Outline of sawcut shown.
		Type B detector loop. Outline of sawcut shown.
		Type C detector loop. Outline of sawcut shown.
		Type D detector loop. Outline of sawcut shown.
		Type E detector loop. Outline of sawcut shown.
		Type Q detector loop. Outline of sawcut shown.
		Magnetic detector
DH	dh	Detector handhole
		Microwave or video detection zone

STATE OF CALIFORNIA
DEPARTMENT OF TRANSPORTATION

ELECTRICAL SYSTEMS (SYMBOLS AND ABBREVIATIONS)

NO SCALE

RSP ES-1C DATED OCTOBER 5, 2007 SUPERCEDES STANDARD PLAN ES-1C DATED MAY 1, 2006 - PAGE 402 OF THE STANDARD PLANS BOOK DATED MAY 2006.

REVISED STANDARD PLAN RSP ES-1C

2006 REVISED STANDARD PLAN RSP ES-1C

7-10-07

DIST	COUNTY	ROUTE	POST MILES TOTAL PROJECT	SHEET NO.	TOTAL SHEETS
04	SCI	101	47.9/52.2	18	31

REGISTERED ELECTRICAL ENGINEER

October 5, 2007
PLANS APPROVAL DATE

REGISTERED PROFESSIONAL ENGINEER
Jeffery G. McRae
No. E14512
Exp. 6-30-08
ELECTRICAL
STATE OF CALIFORNIA

The State of California or its officers or agents shall not be responsible for the accuracy or completeness of electronic copies of this plan sheet.

To accompany plans dated 10-25-10

NOTES-TYPE III SERVICE EQUIPMENT ENCLOSURES:

1. Service equipment enclosure and metering equipment shall meet the requirements of the service utility. The meter area shall have a sealable, lockable, weathertight cover that can be removed without the use of tools.

2. Service equipment enclosures shall be factory wired and conform to NEMA standards.

3. Dimensions of service equipment enclosures shall meet the requirements of the service utility.

4. The dead front panels on Type III service equipment enclosures shall have a continuous stainless steel or aluminum piano hinge. The panel in front of the breakers shall be secured with a latch or captive screws. No live parts shall be mounted on the dead front panel.

5. The exterior door shall have provisions for padlocking. The padlock hole shall be a minimum diameter of 7/16".

6. Enclosures housing transformers of more than one kVA shall have effective screened ventilation louver of not less than 50 square inches. Screen shall be stainless steel No. 304, with a No. 10 size mesh. Framed screen shall be secured with at least four bolts.

7. Fasteners on the exterior of the enclosure shall be vandal-resistant and shall not be removable from the exterior. Exterior screws, nuts, bolts and washers shall be stainless steel.

8. Landing lugs for incoming service conductors shall be compatible with either copper or aluminum conductors sized to suit the conductors shown on the plan. Landing lugs shall be copper or tin-plated aluminum. Neutral bus shall be rated for 125 A and be suitable for copper or aluminum conductors unless otherwise specified. The terminal shall include but not be limited to:

   a) Incoming terminals (landing lugs)
   b) Neutral lugs
   c) Solid neutral terminal strip

9. At least 6 standard single pole circuit breaker spaces, 3/4" nominal, shall be provided for branch circuits. Circuit breaker interiors shall be copper. Interiors of enclosure shall accept plug-in or cable-in/cable-out circuit breakers.

10. Control wiring shall be 600 V, 14 stranded machine tool wire. Where subject to flexing, 19 strand wire shall be used.

11. Main bus shall be rated for 125 A and shall be tin-plated copper.

12. A plastic laminated wiring diagram shall be provided with brass mounting eyelets and attached to the inside of the enclosure and the wiring diagram shall be affixed to the interior with a UL or ETL approved method.

13. An engraved phenolic nameplate on the dead front panel indicating the function of each circuit or device shall be installed with stainless steel rivets or stainless steel screws:

    a) Adjacent to the breaker or device with character size a minimum of 1/8".

    b) At the top of the exterior door panel indicating State system number, voltage level and number of phases with character size a minimum of 3/16".

14. The plan shows the approximate location of devices within the enclosure. Components may be rearranged, however, the "working" clearances within the service equipment enclosure shall be maintained.

15. In unpaved areas a raised portland cement concrete pad 2'-0" x 4" x width of foundation shall be constructed in front of new service equipment enclosure installation. Pad shall be set to elevation of foundation.

16. Foundation shall extend 2" minimum beyond edge of service equipment enclosure.

17. Internal bus, where shown, is typical only. Alternative design of proposed service equipment enclosure shall be submitted to the Engineer for approval.

18. Plug-in circuit breakers may be mounted in the vertical or horizontal position. Cable-in/cable-out circuit breakers shall be mounted in the vertical position.

19. Type III-AF and Type III-BF service equipment enclosures shall have the meter viewing windows located on the front side of the service equipment enclosures.

20. Type III-AR and Type III-BR service equipment enclosures shall be similarly constructed as Type III-AF and Type III-BF respectively, except the meter viewing windows shall be located on the back side of the service equipment enclosures.

21. Minimum clearance shall be required for front and back of service equipment enclosure per National Electrical Code, Article 110.26, "Spaces About Electric Equipment (600 Volts, Nominal, or Less)."

STATE OF CALIFORNIA
DEPARTMENT OF TRANSPORTATION

ELECTRICAL SYSTEMS (SERVICE EQUIPMENT NOTES TYPE III SERIES)

NO SCALE

RSP ES-2C DATED OCTOBER 5, 2007 SUPERCEDES STANDARD PLAN ES-2C DATED MAY 1, 2006 - PAGE 405 OF THE STANDARD PLANS BOOK DATED MAY 2006.

REVISED STANDARD PLAN RSP ES-2C

2006 REVISED STANDARD PLAN RSP ES-2C

DIST	COUNTY	ROUTE	POST MILES TOTAL PROJECT	SHEET NO.	TOTAL SHEETS
04	SCI	101	47.9/52.2	19	31

REGISTERED ELECTRICAL ENGINEER

October 5, 2007
PLANS APPROVAL DATE

REGISTERED PROFESSIONAL ENGINEER Jeffery G. McRae No. E14512 Exp. 6-30-08 ELECTRICAL STATE OF CALIFORNIA

The State of California or its officers or agents shall not be responsible for the accuracy or completeness of electronic copies of this plan sheet.

To accompany plans dated 10-25-10

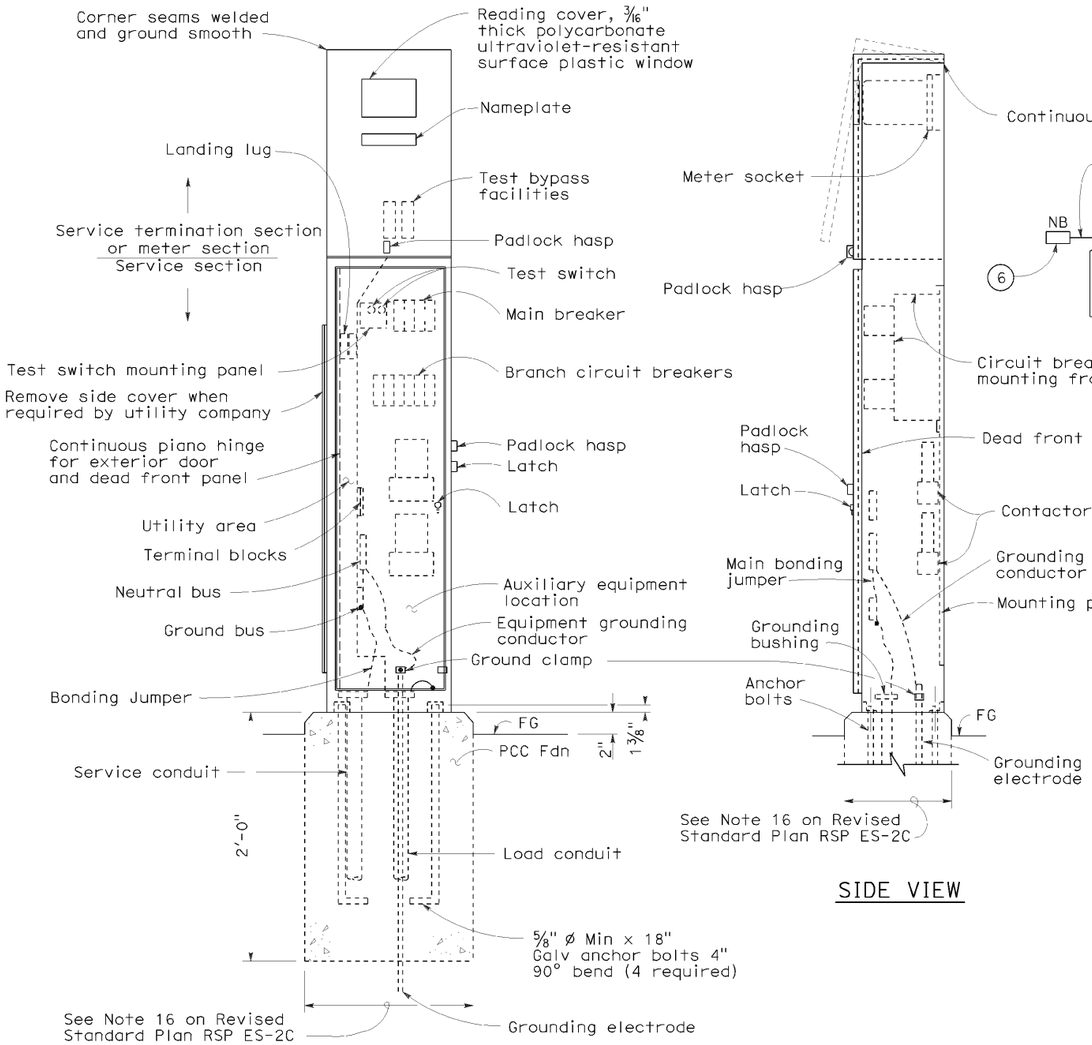

TYPE III-AF SERVICE EQUIPMENT ENCLOSURE (TYPICAL)

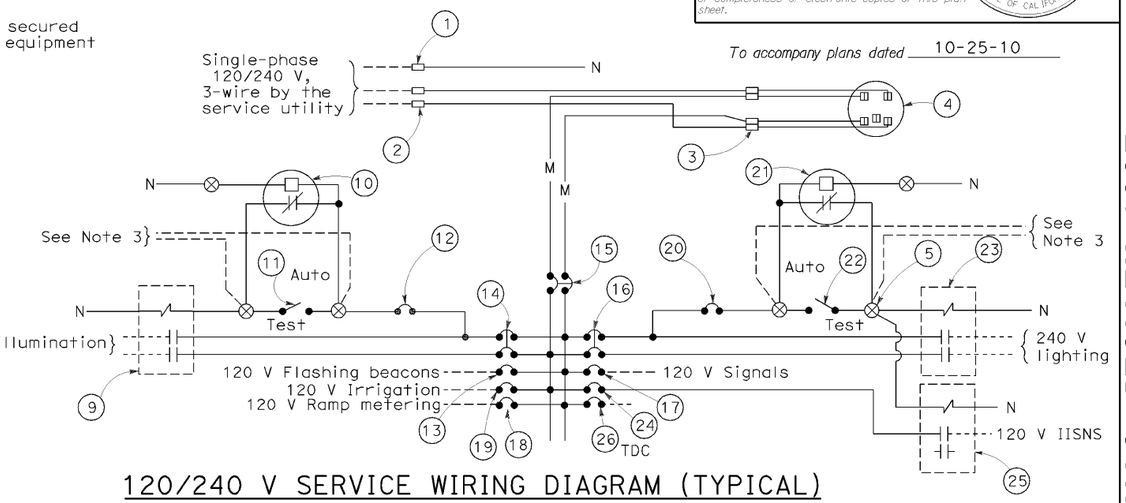

120/240 V SERVICE WIRING DIAGRAM (TYPICAL)

TYPE III-A SERVICE (120/240 V) EQUIPMENT LEGEND

ITEM No.	COMPONENT	NAME PLATE DESCRIPTION	ITEM No.	COMPONENT	NAME PLATE DESCRIPTION
1	Neutral lug		14	30 A, 240 V, 2P, CB	Sign Illumination
2	Landing lug (Note 6)		15	100 A, 240 V, 2P, CB	Main Breaker
3	Test bypass facility		16	30 A, 240 V, 2P, CB	Lighting
4	Meter socket and support		17	50 A, 120 V, 1P, CB	Signals
5	Terminal blocks		18	30 A, 120 V, 1P, CB	Ramp Metering
6	Neutral bus		19	20 A, 120 V, 1P, CB	Irrigation
7	Ground bus		20	15 A, 120 V, 1P, CB	Lighting Control
8	Grounding electrode		21	Photoelectric unit (Note 7)	
9	30 A, 2PNO Contactor	Sign Illumination	22	15 A, 1P, Test switch	Lighting Test Switch
10	Photoelectric unit (Note 7)		23	60 A, 2PNO Contactor	Lighting
11	15 A, 1P, Test switch	Sign Illumination Test Switch	24	15 A, 120 V, 1P, CB	IISNS
12	15 A, 120 V, 1P, CB	Sign Illumination Control	25	30 A, 2PNO Contactor	IISNS
13	15 A, 120 V, 1P, CB	Flashing Beacon	26	20 A, 120 V, 1P, CB	Telephone Demarcation Cabinet

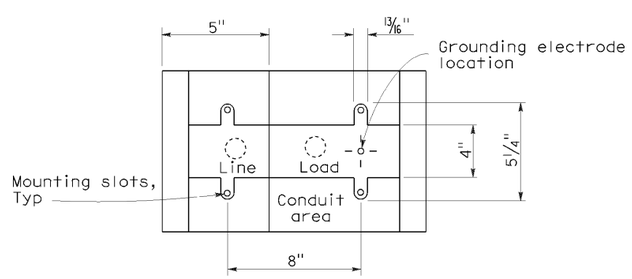

BASE FOR TYPE III-A SERVICE EQUIPMENT ENCLOSURE

NOTES: (FOR SERVICE EQUIPMENT ENCLOSURE)

1. Voltage ratings of service equipment shall conform to the service voltages indicated on the plans.
2. Unless otherwise indicated on the plans, service equipment items shall be provided for each service equipment enclosure as shown.
3. Connect to remote test switch mounted on lighting standards, sign post or structure when required.
4. Items No. 1 and 6 shall be isolated from the service equipment enclosure.
5. Meter sockets shall be 5 clip type.
6. The landing lug shall be suitable for multiple conductors.
7. Type V photoelectric control shall be used unless otherwise indicated on the plans.

STATE OF CALIFORNIA
DEPARTMENT OF TRANSPORTATION

ELECTRICAL SYSTEMS (SERVICE EQUIPMENT AND TYPICAL WIRING DIAGRAM, TYPE III-A SERIES)

NO SCALE

RSP ES-2D DATED OCTOBER 5, 2007 SUPERCEDES STANDARD PLAN ES-2D DATED MAY 1, 2006 - PAGE 406 OF THE STANDARD PLANS BOOK DATED MAY 2006.

REVISED STANDARD PLAN RSP ES-2D

2006 REVISED STANDARD PLAN RSP ES-2D

7-10-07

DIST	COUNTY	ROUTE	POST MILES TOTAL PROJECT	SHEET NO.	TOTAL SHEETS
04	SCI	101	47.9/52.2	20	31

Randell D. Hiatt
REGISTERED CIVIL ENGINEER

June 6, 2008
PLANS APPROVAL DATE

Randell D. Hiatt
No. C50200
Exp. 6-30-09
CIVIL
STATE OF CALIFORNIA
REGISTERED PROFESSIONAL ENGINEER

The State of California or its officers or agents shall not be responsible for the accuracy or completeness of electronic copies of this plan sheet.

To accompany plans dated 10-25-10

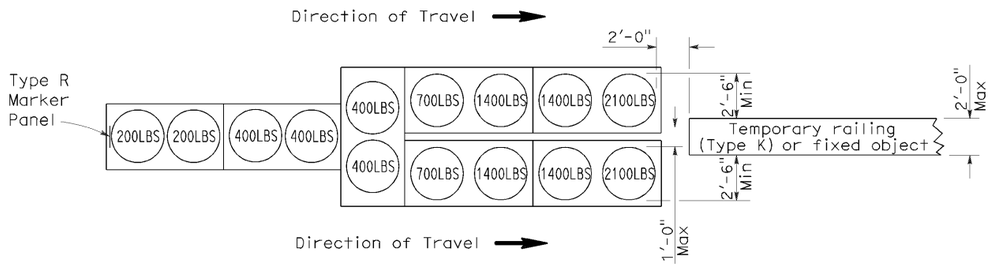

ARRAY 'TU14'

Approach speed 45 mph or more

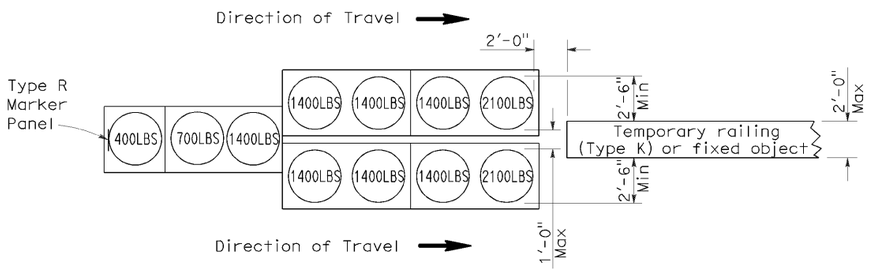

ARRAY 'TU11'

Approach speed less than 45 mph

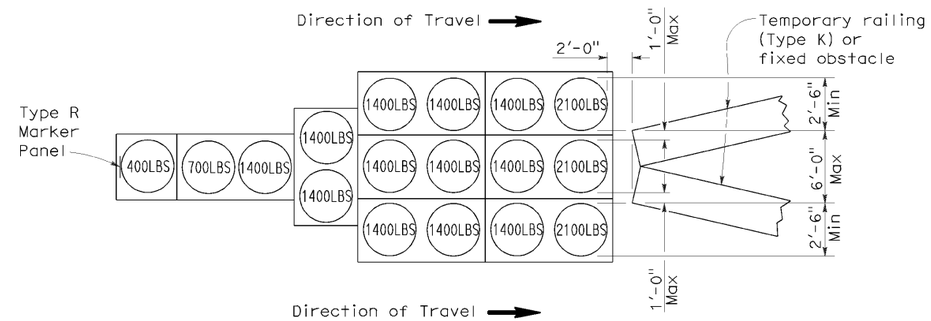

ARRAY 'TU17'

Approach speed less than 45 mph

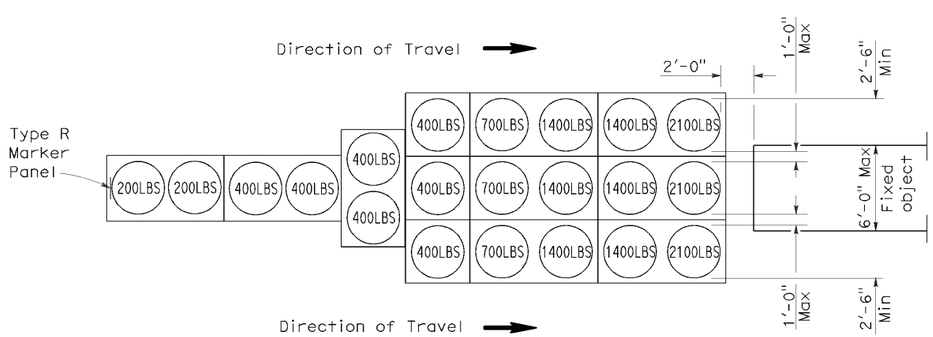

ARRAY 'TU21'

Approach speed 45 mph or more

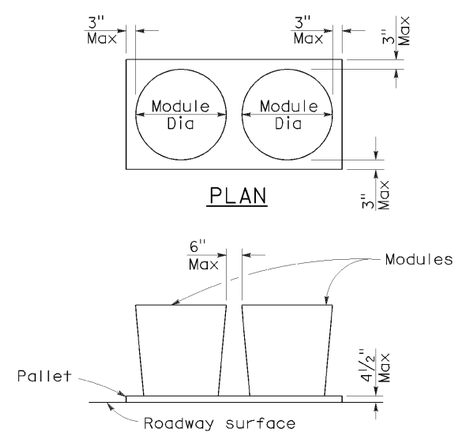

CRASH CUSHION PALLET DETAIL

See Note 7

NOTES:

1. (XXX) Indicates sand filled module location and weight of sand in pounds for each module. Module spacing is based on the greater diameter of the module.
2. All sand weights are nominal.
3. Temporary crash cushion arrays shall not encroach on the traveled way.
4. Place the top of Type R marker panel 1" below the module lid.
5. Refer to Standard Plan A73B for marker details.
6. Approach speeds indicated conform to NCHRP 350 Report criteria.
7. Use of pallets is optional.

STATE OF CALIFORNIA
DEPARTMENT OF TRANSPORTATION

TEMPORARY CRASH CUSHION, SAND FILLED (UNIDIRECTIONAL)

NO SCALE

RSP T1A DATED JUNE 6, 2008 SUPERSEDES STANDARD PLAN T1A
DATED MAY 1, 2006 - PAGE 211 OF THE STANDARD PLANS BOOK DATED MAY 2006.

REVISED STANDARD PLAN RSP T1A

2006 REVISED STANDARD PLAN RSP T1A

5-15-08

DIST	COUNTY	ROUTE	POST MILES TOTAL PROJECT	SHEET NO.	TOTAL SHEETS
04	SCI	101	47.9/52.2	21	31

Randell D. Hiatt
REGISTERED CIVIL ENGINEER

June 6, 2008
PLANS APPROVAL DATE

REGISTERED PROFESSIONAL ENGINEER
Randell D. Hiatt
No. C50200
Exp. 6-30-09
CIVIL
STATE OF CALIFORNIA

The State of California or its officers or agents shall not be responsible for the accuracy or completeness of electronic copies of this plan sheet.

To accompany plans dated 10-25-10

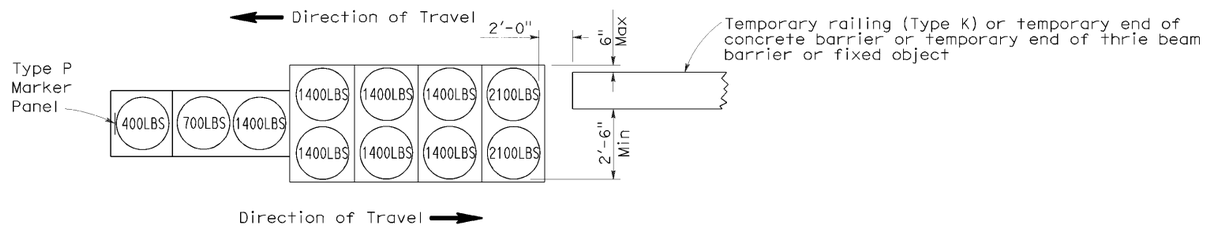

ARRAY 'TB11'

Approach speed less than 45 mph

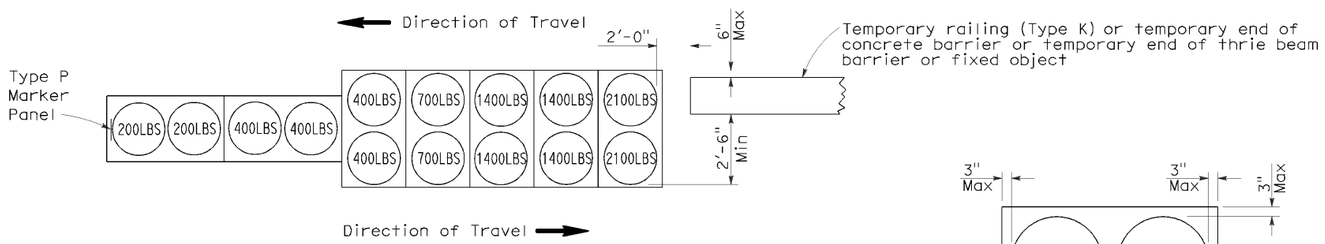

ARRAY 'TB14'

Approach speed 45 mph or more

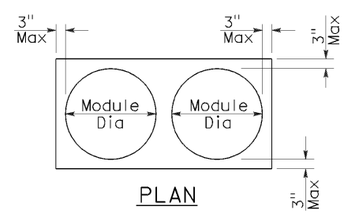

PLAN

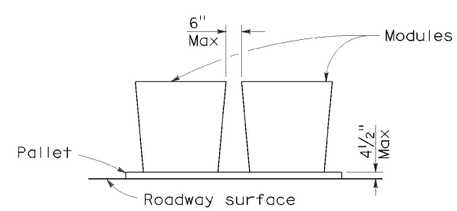

ELEVATION

CRASH CUSHION PALLET DETAIL

See Note 7

NOTES:

1. (XXX) Indicates sand filled module location and weight of sand in pounds for each module. Module spacing is based on the greater diameter of the module.
2. All sand weights are nominal.
3. Temporary crash cushion arrays shall not encroach on the traveled way.
4. Place the Type P marker panel so that the bottom of the panel rests upon the pallet.
5. Refer to Standard Plan A73B for marker details.
6. Approach speeds indicated conform to NCHRP 350 Report criteria.
7. Use of pallets is optional.

STATE OF CALIFORNIA
DEPARTMENT OF TRANSPORTATION

TEMPORARY CRASH CUSHION, SAND FILLED (BIDIRECTIONAL)

NO SCALE

RSP T1B DATED JUNE 6, 2008 SUPERSEDES STANDARD PLAN T1B
DATED MAY 1, 2006 - PAGE 212 OF THE STANDARD PLANS BOOK DATED MAY 2006.

REVISED STANDARD PLAN RSP T1B

2006 REVISED STANDARD PLAN RSP T1B

5-15-08

DIST	COUNTY	ROUTE	POST MILES TOTAL PROJECT	SHEET NO.	TOTAL SHEETS
04	SCI	101	47.9/52.2	22	31

Randell D. Hiatt
REGISTERED CIVIL ENGINEER

June 6, 2008
PLANS APPROVAL DATE

REGISTERED PROFESSIONAL ENGINEER
Randell D. Hiatt
No. C50200
Exp. 6-30-09
CIVIL
STATE OF CALIFORNIA

The State of California or its officers or agents shall not be responsible for the accuracy or completeness of electronic copies of this plan sheet.

To accompany plans dated 10-25-10

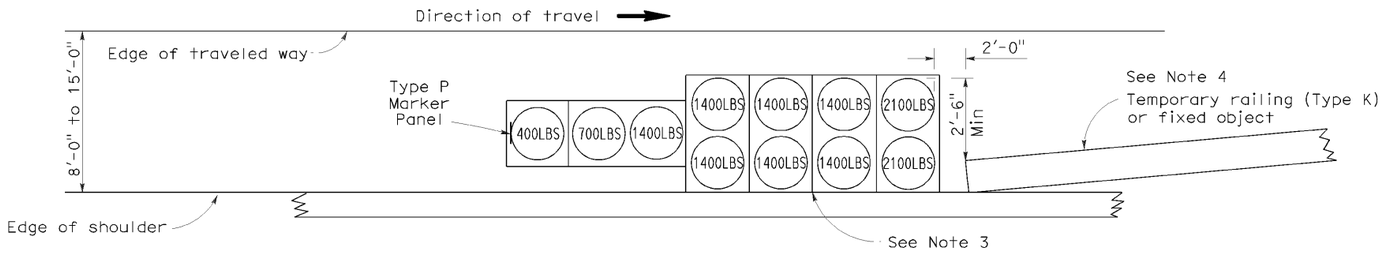

ARRAY 'TS11'

Approach speed less than 45 mph
See Note 9

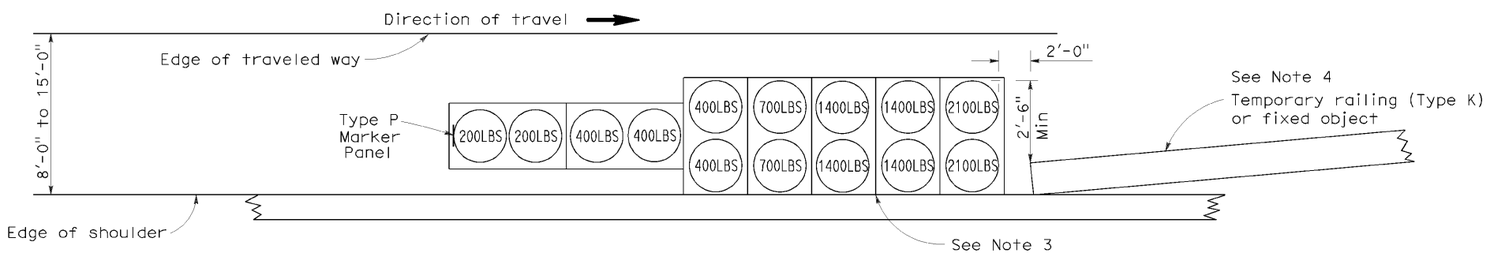

ARRAY 'TS14'

Approach speed 45 mph or more
See Note 9

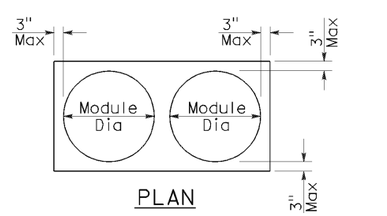

PLAN

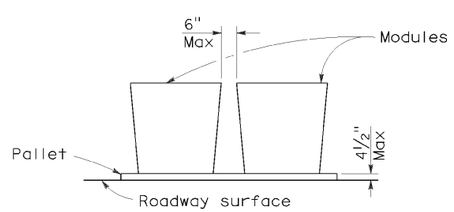

ELEVATION

CRASH CUSHION PALLET DETAIL

See Note 11

NOTES:

1. (XXX) Indicates sand filled module location and weight of sand in pounds for each module. Module spacing is based on the greater diameter of the module.
2. All sand weights are nominal.
3. The temporary crash cushion arrays shown on this plan shall be used only in locations where there will be traffic on one side of the temporary crash cushion array.
4. If the fixed object or approach end of the temporary railing is less than 15'-0" from the edge of traveled way, a temporary crash cushion is required in a construction or work zone.
5. Temporary crash cushion arrays shall not encroach on the traveled way.
6. Arrays for median shoulders shall conform to details shown on this plan for outside shoulders.
7. Place the Type P marker panel so that the bottom of the panel rests upon the pallet and faces traffic.
8. Refer to Standard Plan A73B for marker details.
9. For shoulder widths less than 8'-0", appropriate approved crash cushion protection, other than sand filled modules, shall be provided at fixed objects and at approach ends of temporary railing. The specific type of crash cushion shall be as shown on the project plans or as specified in the Special Provisions, or if not shown on the project plans or specified in the Special Provisions, shall be as approved by the Engineer.
10. Approach speeds indicated conform to NCHRP 350 Report criteria.
11. Use of pallets is optional.

STATE OF CALIFORNIA
DEPARTMENT OF TRANSPORTATION

TEMPORARY CRASH CUSHION, SAND FILLED (SHOULDER INSTALLATIONS)

NO SCALE

RSP T2 DATED JUNE 6, 2008 SUPERSEDES STANDARD PLAN T2
DATED MAY 1, 2006 - PAGE 213 OF THE STANDARD PLANS BOOK DATED MAY 2006.

REVISED STANDARD PLAN RSP T2

2006 REVISED STANDARD PLAN RSP T2

5-15-08

DIST	COUNTY	ROUTE	POST MILES TOTAL PROJECT	SHEET NO	TOTAL SHEETS
04	SCI	101	47.9/52.2	23	31

REGISTERED CIVIL ENGINEER 3-21-10 DATE

10-25-10
PLANS APPROVAL DATE

REGISTERED PROFESSIONAL ENGINEER MIKE VAN DE POL No. C35610 Exp. 9-30-11 CIVIL STATE OF CALIFORNIA

The State of California or its officers or agents shall not be responsible for the accuracy or completeness of electronic copies of this plan sheet.

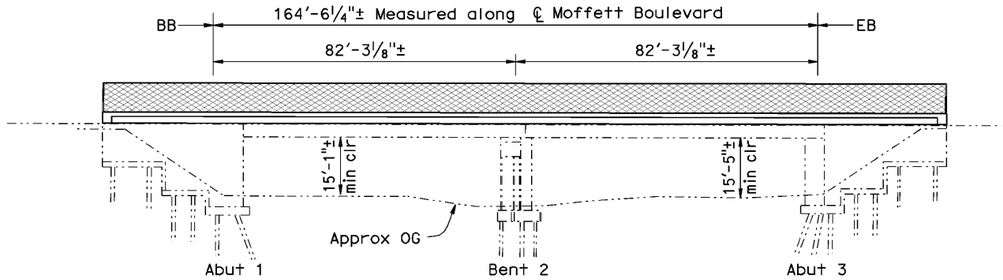

Datum Elevation=0.00 ±

49+00± 50+00± 51+00± 52+00±

ELEVATION

1" = 20'

Bridge mounted Light standards and Signs not shown

Existing Barrier, Railing and Removal Limits not Shown

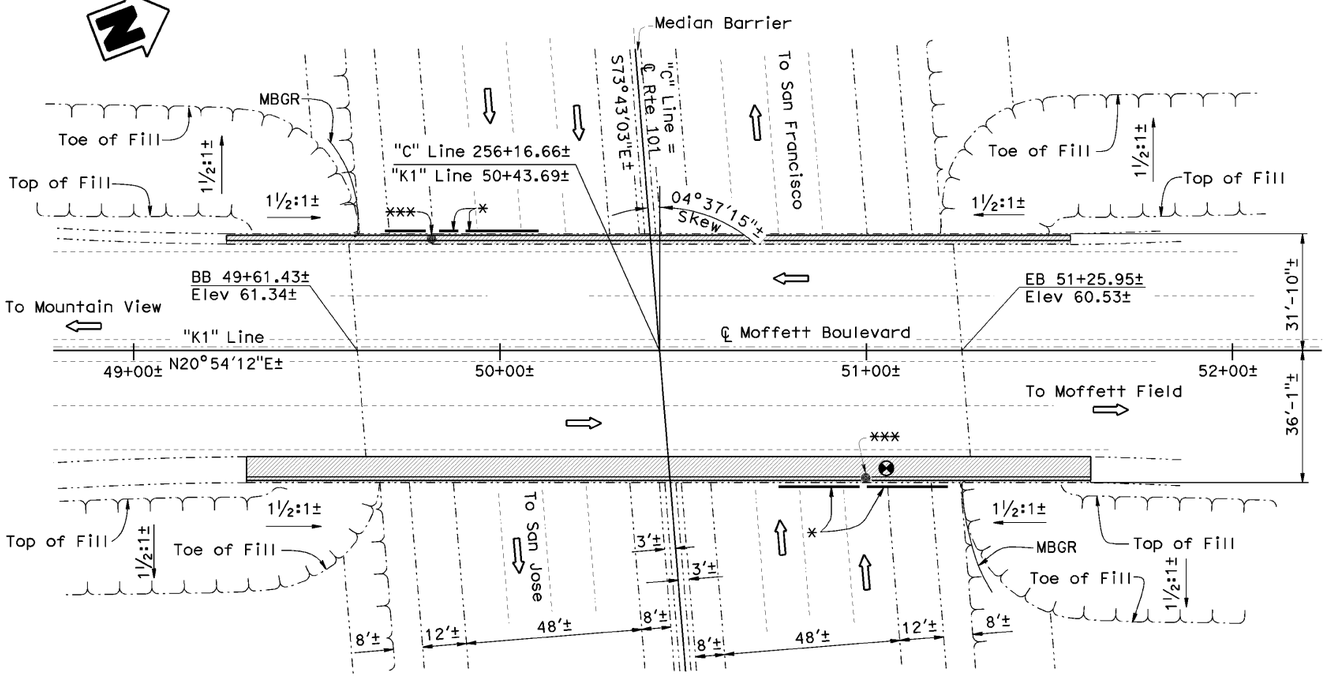

PLAN

1" = 20'

MOFFETT BOULEVARD OVERCROSSING

BRIDGE No. 37-0105, PM 47.89

QUANTITIES

PREPARE CONCRETE BRIDGE DECK SURFACE	165	SQFT
BRIDGE REMOVAL (PORTION), LOCATION A	LUMP	SUM
STRUCTURE EXCAVATION (RETAINING WALL)	1	CY
STRUCTURE BACKFILL (RETAINING WALL)	1	CY
STRUCTURAL CONCRETE (RETAINING WALL)	7	CY
FURNISH POLYESTER CONCRETE OVERLAY	32	CF
PLACE POLYESTER CONCRETE OVERLAY	165	SQFT
BAR REINFORCING STEEL (RETAINING WALL)	1,560	LB
CHAIN LINK RAILING (TYPE 7)	454	LF
CONCRETE BARRIER (TYPE 26 MODIFIED)	227	LF
CONCRETE BARRIER (TYPE 732 MODIFIED)	227	LF

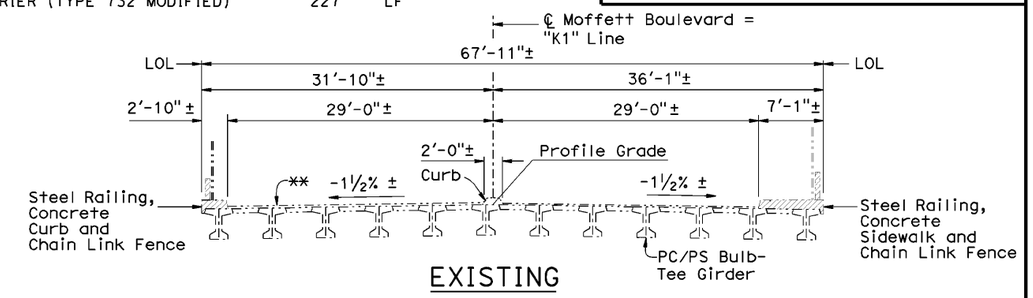

EXISTING

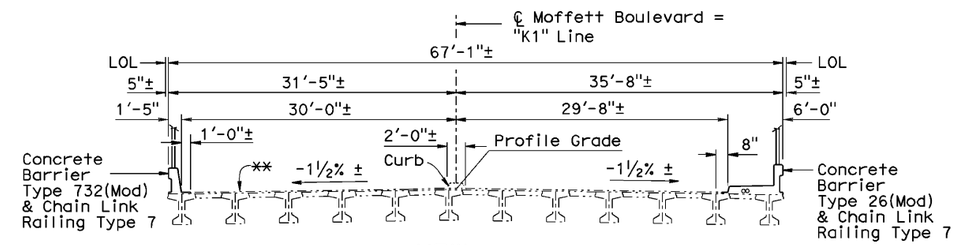

NEW

TYPICAL SECTIONS

⅛" = 1'

Note:
Bridge Mounted Electroliers and Signs not Shown. Existing Curb to Remain

GENERAL NOTES

LOAD AND RESISTANCE FACTOR DESIGN

DESIGN:
AASHTO LRFD Bridge Design Specifications, 4th edition, 2007; ('96 AASHTO w/revisions by Caltrans).

CONCRETE:
fy = 60,000 psi
f'c = 3600 psi
n = 8

INDEX TO PLANS

SHEET No.	TITLE
1.	GENERAL PLAN No. 1
2.	GENERAL PLAN No. 2
3.	GENERAL PLAN No. 3
4.	DETAILS No. 1
5.	DETAILS No. 2
6.	DETAILS No. 3
7.	DETAILS No. 4
8.	DETAILS No. 5
9.	DETAILS No. 6

STANDARD PLANS DATED MAY 2006

A10A	ACRONYMS AND ABBREVIATIONS SHEET 1 OF 2)
A10B	ACRONYMS AND ABBREVIATIONS SHEET 2 OF 2)
A10C	SYMBOLS (SHEET 1 OF 2)
A10D	SYMBOLS (SHEET 2 OF 2)
A62C	LIMITS OF PAYMENT FOR EXCAVATION AND BACKFILL BRIDGE
RSP B6-21	JOINT SEALS (MAXIMUM MOVEMENT RATING = 2")
B11-52	CHAIN LINK RAILING TYPE 7
B11-54	CONCRETE BARRIER TYPE 26
B11-55	CONCRETE BARRIER TYPE 732

LEGEND

Denotes existing structure
Denotes new construction
Denotes limits of removal of existing concrete curb and sidewalk, deck overhang chain link railing and metal railing

* Existing bridge mounted sign
** Existing 2" plant mix surfacing
*** Existing bridge mounted light standards
Point of minimum vertical clearance

STANDARD PLAN SHEET No.
DETAIL No.

NOTE:
THE CONTRACTOR SHALL VERIFY ALL CONTROLLING FIELD DIMENSIONS BEFORE ORDERING OR FABRICATING ANY MATERIAL.

Gordon Danke, DESIGN ENGINEER	DESIGN	BY Mike Van De Pol	CHECKED John O'Brien	LOAD & RESISTANCE FACTOR DESIGN	LIVE LOADING:
	DETAILS	BY N.D. TAPALLA, Mike Van De Pol	CHECKED John O' Brien	LAYOUT	BY N.D. TAPALLA, Mike Van De Pol — CHECKED John O' Brien
	QUANTITIES	BY Mike Van De Pol	CHECKED John O' Brien	SPECIFICATIONS	BY Theresa Nedwick — PLANS AND SPECS COMPARED Theresa Nedwick

ORIGINAL SCALE IN INCHES FOR REDUCED PLANS 0 1 2 3

STATE OF CALIFORNIA
DEPARTMENT OF TRANSPORTATION

DIVISION OF ENGINEERING SERVICES
STRUCTURE DESIGN
DESIGN BRANCH 9

CU 04
EA 3A9801

BRIDGE NO. Various
POST MILE Varies

BARRIER REPLACEMENT
ROUTE 101 BRIDGES
GENERAL PLAN No. 1

DISREGARD PRINTS BEARING EARLIER REVISION DATES

REVISION DATES: 7-08-09, 8-24-09, 11-18-09, 3-22-10, 4-5-10

SHEET 1 OF 9

STRUCTURES DESIGN GENERAL PLAN SHEET (ENGLISH) (REV.07-24-06)

FILE => 04-3a9801-a-gp01.dgn

USERNAME => s136467 DATE PLOTTED => 14-MAR-2011 TIME PLOTTED => 11:40

DIST	COUNTY	ROUTE	POST MILES TOTAL PROJECT	SHEET NO	TOTAL SHEETS
04	SCI	101	47.9/52.2	24	31

REGISTERED CIVIL ENGINEER 3-21-10 DATE

10-25-10
PLANS APPROVAL DATE

REGISTERED PROFESSIONAL ENGINEER MIKE VAN DE POL No. 35610 Exp. 9-30-11 CIVIL STATE OF CALIFORNIA

The State of California or its officers or agents shall not be responsible for the accuracy or completeness of electronic copies of this plan sheet.

QUANTITIES

PREPARE CONCRETE BRIDGE DECK SURFACE	245	SQFT
BRIDGE REMOVAL (PORTION), LOCATION B	LUMP	SUM
STRUCTURE EXCAVATION (BRIDGE)	1	CY
STRUCTURE BACKFILL (BRIDGE)	1	CY
STRUCTURAL CONCRETE (BRIDGE)	4	CY
FURNISH POLYESTER CONCRETE OVERLAY	47	CF
PLACE POLYESTER CONCRETE OVERLAY	245	SQFT
BAR REINFORCING STEEL (BRIDGE)	1,060	LB
CHAIN LINK RAILING (TYPE 7)	638	LF
CONCRETE BARRIER (TYPE 26 MODIFIED)	319	LF
CONCRETE BARRIER (TYPE 732 MODIFIED)	319	LF

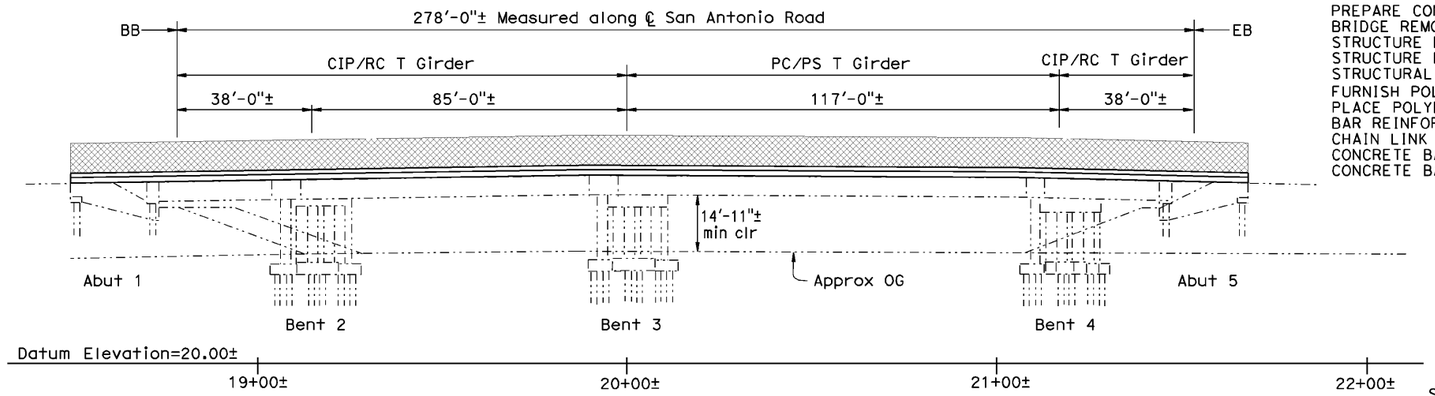

ELEVATION

1" = 20'

Bridge Mounted Signs and Light Standards not shown

Existing Barrier, Railing and Removal Limits not Shown

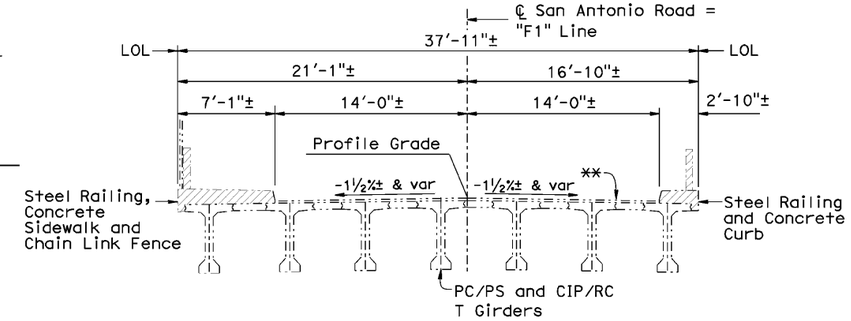

EXISTING

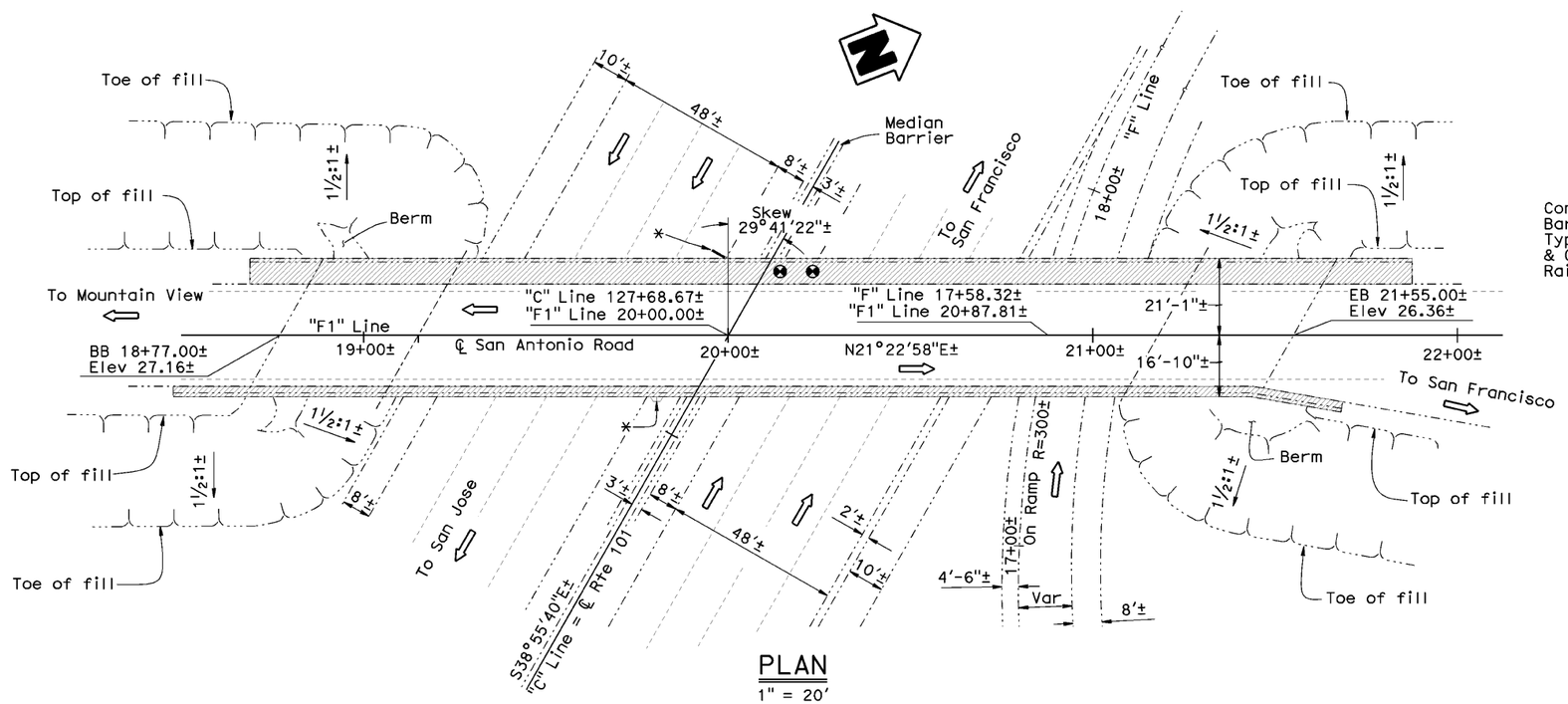

PLAN

1" = 20'

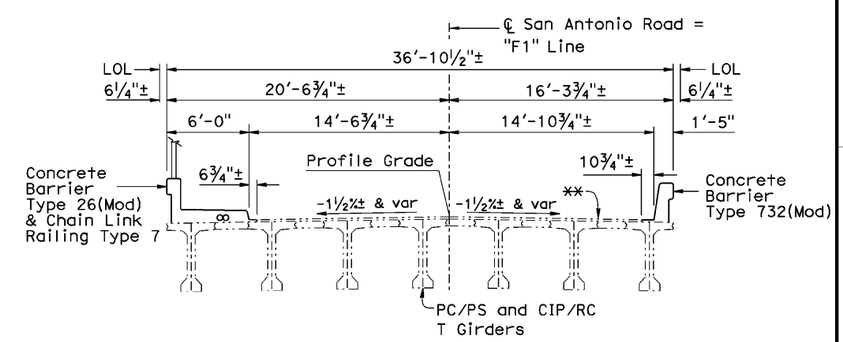

NEW

TYPICAL SECTIONS

3/16" = 1'

LEGEND:

- Denotes limits of removal of existing concrete curb and sidewalk, deck overhang, chain link railing and metal railing
- Denotes existing structure
- Denotes new construction
- * Existing bridge mounted sign
- ** Existing 2"± bitimunous surfacing
- Point of minimum elevation

NOTE:
THE CONTRACTOR SHALL VERIFY ALL CONTROLLING FIELD DIMENSIONS BEFORE ORDERING OR FABRICATING ANY MATERIAL.

SAN ANTONIO ROAD OVERCROSSING

BRIDGE No. 37-0146 PM 50.32

Gordon Danke
DESIGN ENGINEER

	BY	CHECKED
DESIGN	Mike Van De Pol	John O'Brien
DETAILS	N.D. TAPALLA, Mike Van De Pol	John O'Brien
QUANTITIES	Mike Van De Pol	John O'Brien

LOAD & RESISTANCE FACTOR DESIGN — LIVE LOADING:
LAYOUT: N.D. TAPALLA, Mike Van De Pol — CHECKED: John O'Brien
SPECIFICATIONS: Theresa Nedwick — PLANS AND SPECS COMPARED: Theresa Nedwick

ORIGINAL SCALE IN INCHES FOR REDUCED PLANS 0 1 2 3

STATE OF CALIFORNIA
DEPARTMENT OF TRANSPORTATION

DIVISION OF ENGINEERING SERVICES
STRUCTURE DESIGN
DESIGN BRANCH 9

CU 04
EA 3A9801

BRIDGE NO. Various
POST MILE Varies

BARRIER REPLACEMENT
ROUTE 101 BRIDGES
GENERAL PLAN No.2

DISREGARD PRINTS BEARING EARLIER REVISION DATES

REVISION DATES: 7-08-08, 7-08-05, 8-25-09, 11-18-09, 3-22-10, 4-5-10

SHEET 2 OF 9

STRUCTURES DESIGN GENERAL PLAN SHEET (ENGLISH) (REV.07-24-06)

FILE => 04-3a9801-a-gp02.dgn

USERNAME => s136467 DATE PLOTTED => 14-MAR-2011 TIME PLOTTED => 11:40

DIST	COUNTY	ROUTE	POST MILES TOTAL PROJECT	SHEET NO	TOTAL SHEETS
04	SCI	101	47.9/52.2	25	31

REGISTERED CIVIL ENGINEER 3-21-10 DATE

10-25-10
PLANS APPROVAL DATE

REGISTERED PROFESSIONAL ENGINEER MIKE VAN DE POL No. 35610 Exp. 9-30-11 CIVIL STATE OF CALIFORNIA

The State of California or its officers or agents shall not be responsible for the accuracy or completeness of electronic copies of this plan sheet.

QUANTITIES

REMOVE UNSOUND CONCRETE	125	CF
BRIDGE REMOVAL (PORTION), LOCATION C	LUMP	SUM
STRUCTURE EXCAVATION (BRIDGE)	1	CY
STRUCTURE BACKFILL (BRIDGE)	1	CY
STRUCTURAL CONCRETE (BRIDGE)	7	CY
DRILL AND BOND DOWEL	220	LF
CLEAN EXPANSION JOINT	138	LF
RAPID SETTING CONCRETE (PATCH)	125	CF
JOINT SEAL (MR 1½")	138	LF
BAR REINFORCING STEEL (BRIDGE)	2,010	LB
CONCRETE BARRIER (TYPE 26 MODIFIED)	329	LF
CONCRETE BARRIER (TYPE 732 MODIFIED)	329	LF

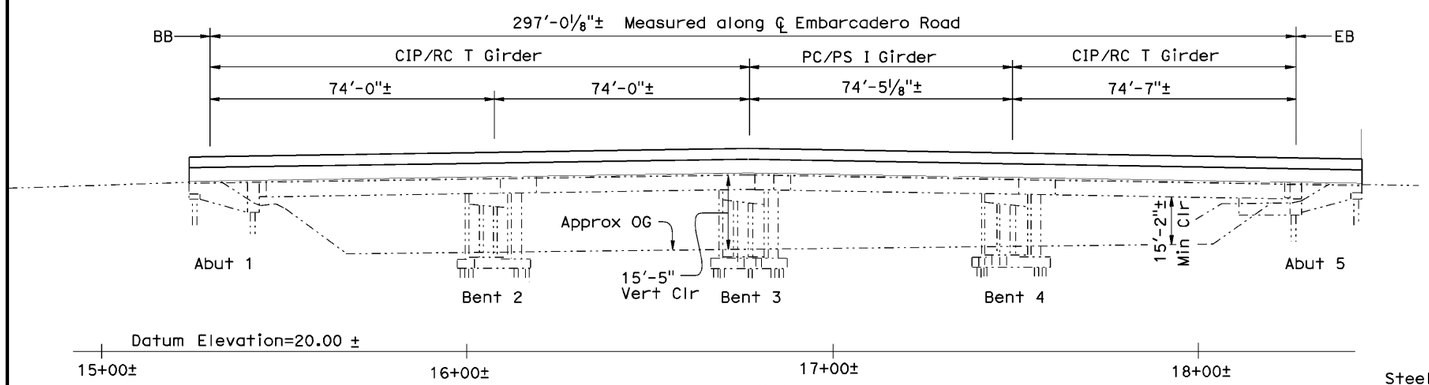

ELEVATION

1" = 20'

Bridge mounted signs not shown
Existing Barrier, Railing and Removal Limits not Shown

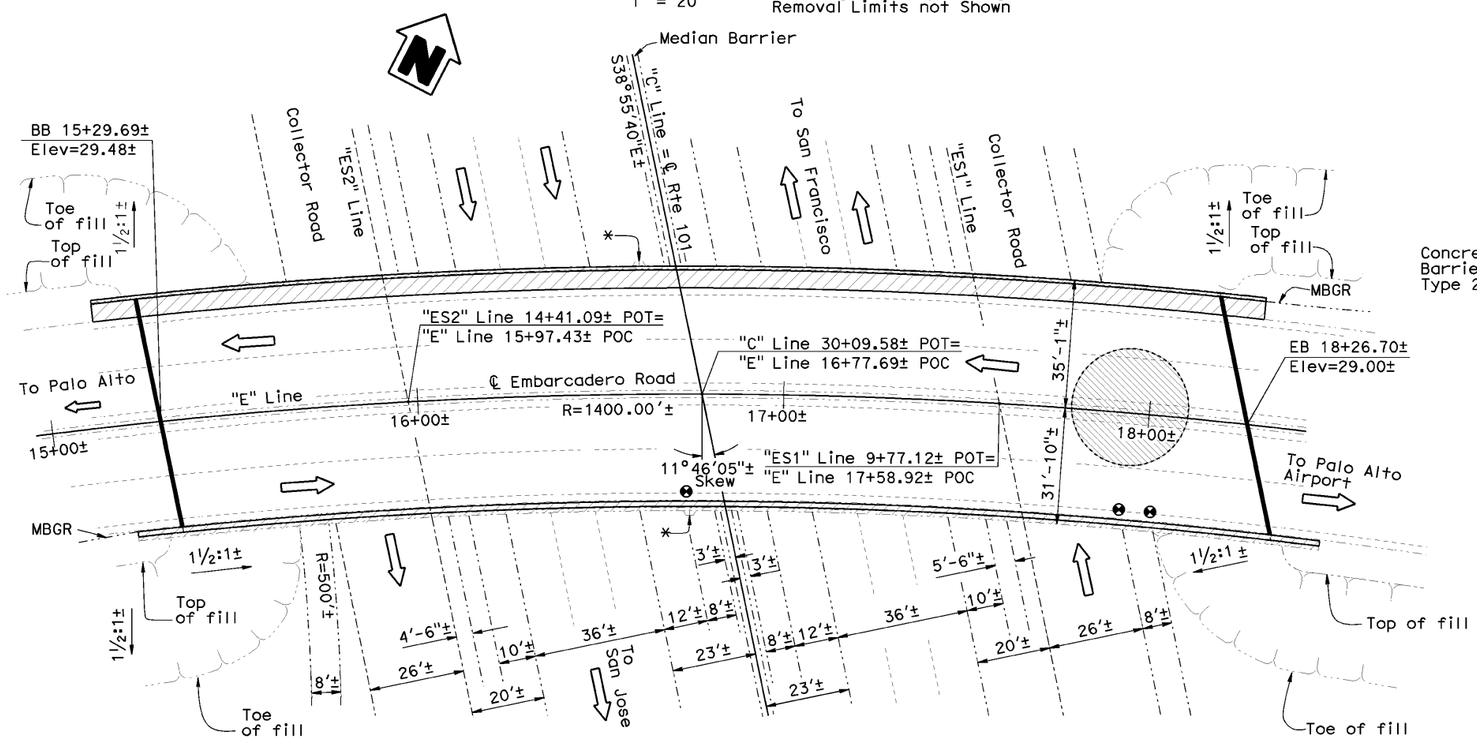

PLAN

1" = 20'

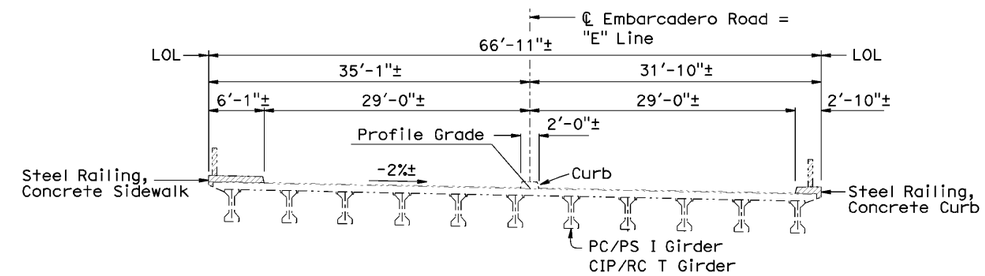

EXISTING

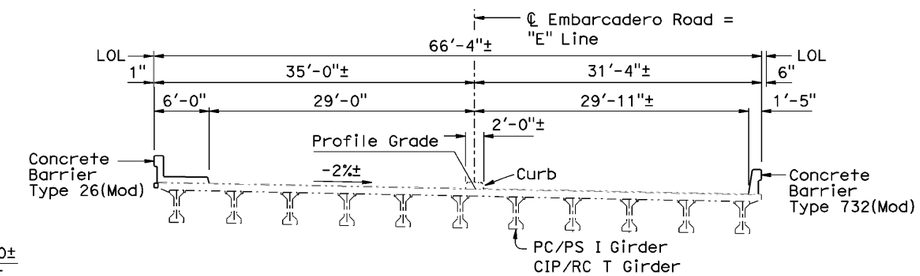

NEW

TYPICAL SECTIONS @ SPAN 3

⅛" = 1'-0"

Existing Bridge Mounted Signs not Shown. Existing Curb to Remain.

LEGEND:

- Denotes limits of removal of existing concrete curb and sidewalk, deck overhang and metal railing
- Denotes existing structure
- Denotes new construction
- Indicates location of remove existing joint seal and place new joint seal
- * Existing bridge mounted sign
- Denotes approximate limits of removal of unsound concrete and patch with rapid set concrete
- Point of minimum elevation clearance

NOTE:
THE CONTRACTOR SHALL VERIFY ALL CONTROLLING FIELD DIMENSIONS BEFORE ORDERING OR FABRICATING ANY MATERIAL.

EMBARCADERO ROAD OVERCROSSING

BRIDGE No. 37-0150 PM 52.17

BARRIER REPLACEMENT
ROUTE 101 BRIDGES
GENERAL PLAN No. 3

Gordon Danke
DESIGN ENGINEER

	BY	CHECKED		BY	CHECKED
DESIGN	Mike Van De Pol	John O'Brien	LOAD & RESISTANCE FACTOR DESIGN / LIVE LOADING:		
DETAILS	N.D. TAPALLA Mike Van De Pol	John O'Brien	LAYOUT	N.D. TAPALLA Mike Van De Pol	John O'Brien
QUANTITIES	Mike Van De Pol	John O'Brien	SPECIFICATIONS	Theresa Nedwick	PLANS AND SPECS COMPARED Theresa Nedwick

STATE OF CALIFORNIA
DEPARTMENT OF TRANSPORTATION

DIVISION OF ENGINEERING SERVICES
STRUCTURE DESIGN
DESIGN BRANCH 9

BRIDGE NO. Various
POST MILE Varies

CU 04
EA 3A9801

ORIGINAL SCALE IN INCHES FOR REDUCED PLANS 0 1 2 3

DISREGARD PRINTS BEARING EARLIER REVISION DATES

REVISION DATES: 7-08-09 7-08-09 8-26-09 11-19-09 3-22-10 4-5-10

SHEET 3 OF 9

STRUCTURES DESIGN GENERAL PLAN SHEET (ENGLISH) (REV.07-24-06)

FILE => 04-3a9801-a-gp03.dgn

USERNAME => s136467 DATE PLOTTED => 14-MAR-2011 TIME PLOTTED => 11:40

DIST	COUNTY	ROUTE	POST MILES TOTAL PROJECT	SHEET NO	TOTAL SHEETS
04	SCI	101	47.9/52.2	26	31

REGISTERED CIVIL ENGINEER 3-21-10 DATE

10-25-10
PLANS APPROVAL DATE

REGISTERED PROFESSIONAL ENGINEER MIKE VAN DE POL No. 35610 Exp. 9-30-11 CIVIL STATE OF CALIFORNIA

The State of California or its officers or agents shall not be responsible for the accuracy or completeness of electronic copies of this plan sheet.

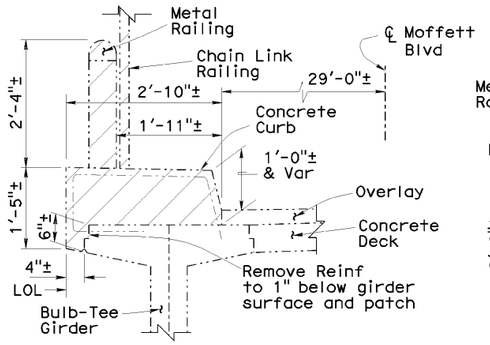

BRIDGE DECK

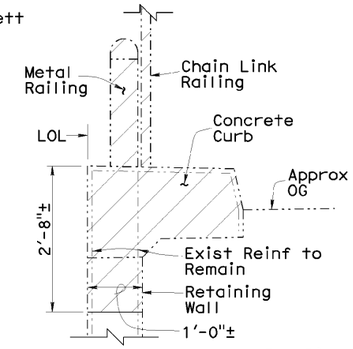

RETAINING WALL

For Dimensions, see Section at Bridge Deck

LEFT SIDE

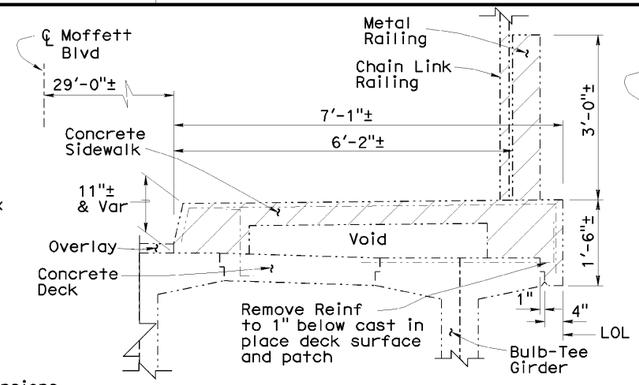

BRIDGE DECK

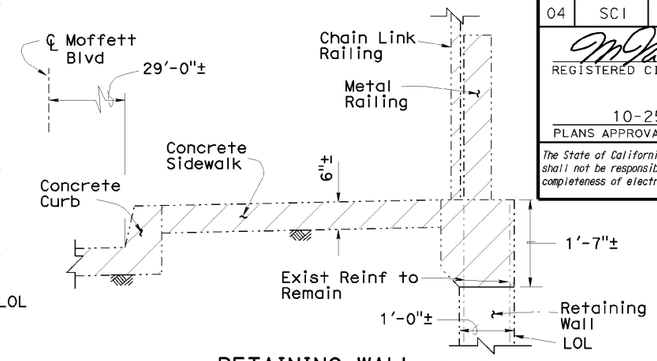

RETAINING WALL

For Dimensions, see Section at Bridge Deck

RIGHT SIDE

MOFFETT BOULEVARD OVERCROSSING

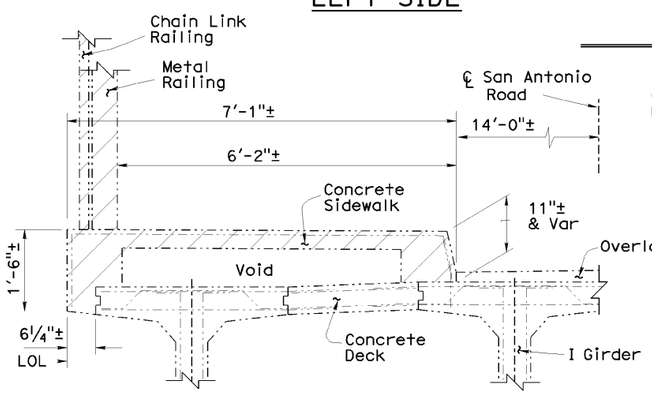

BRIDGE DECK

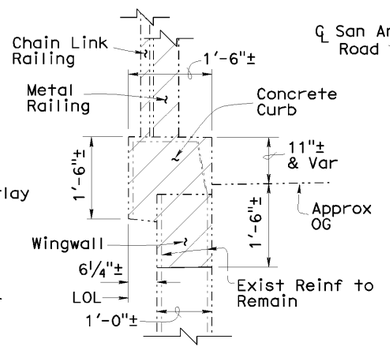

WINGWALL

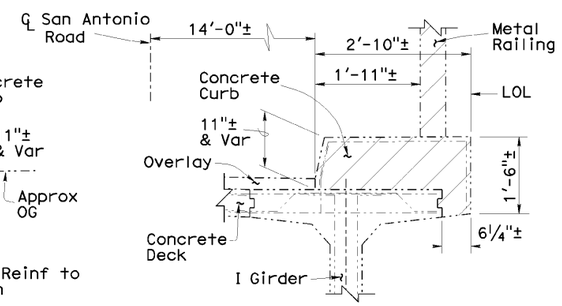

BRIDGE DECK

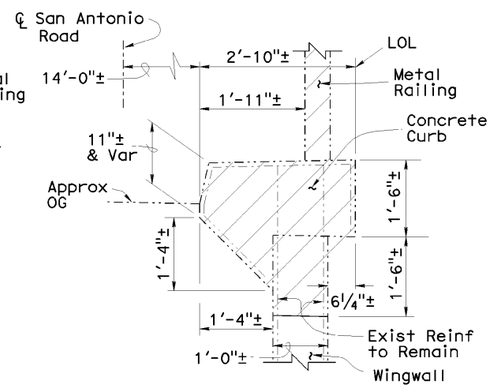

WINGWALL

LEFT SIDE

RIGHT SIDE

SAN ANTONIO ROAD OVERCROSSING

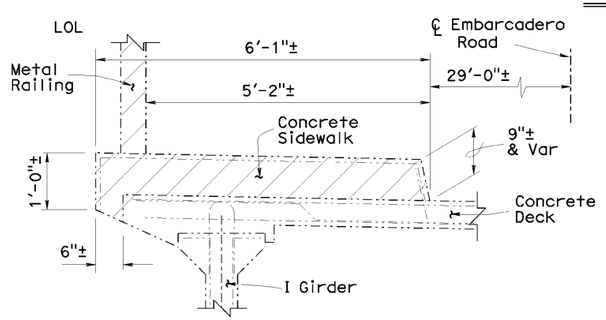

BRIDGE DECK

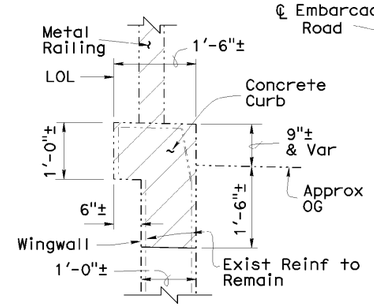

WINGWALL

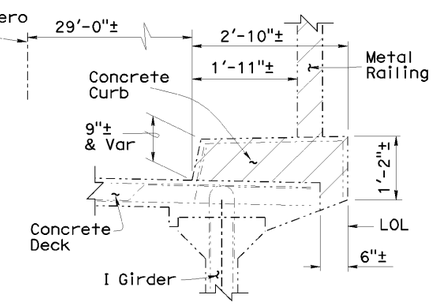

BRIDGE DECK

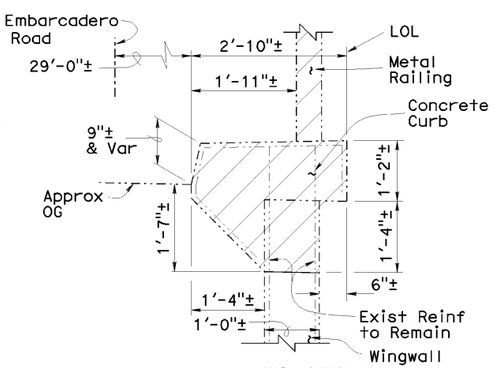

WINGWALL

LEFT SIDE

RIGHT SIDE

EMBARCADERO ROAD OVERCROSSING

REMOVAL DETAILS

¾" = 1'-0"

Structure Sides Shown, Based on Looking Ahead on ℄ Stationing

Denotes Limits of Removal of Existing Concrete Curb and Sidewalk, Deck Overhang, Metal Railing and Chain Link Railing

For Added Details, see "General Plan No.1", "Genereal Plan No. 2" and "General Plan No. 3" Sheets

All Reinforcement not Shown

Denotes existing structure

Denotes new construction

NOTE:
THE CONTRACTOR SHALL VERIFY ALL CONTROLLING FIELD DIMENSIONS BEFORE ORDERING OR FABRICATING ANY MATERIAL.

	BY	CHECKED
DESIGN	Mike Van De Pol	John O'Brien
DETAILS	Mike Van De Pol	John O'Brien
QUANTITIES	Mike Van De Pol	John O'Brien

STATE OF CALIFORNIA
DEPARTMENT OF TRANSPORTATION

DIVISION OF ENGINEERING SERVICES
STRUCTURE DESIGN
DESIGN BRANCH 9

BRIDGE NO. Various
POST MILE Varies

BARRIER REPLACEMENT
ROUTE 101 BRIDGES
DETAILS No. 1

STRUCTURES DESIGN DETAIL SHEET (ENGLISH) (REV. 10/25/05)

ORIGINAL SCALE IN INCHES FOR REDUCED PLANS 0 1 2 3

CU 04
EA 3A9801

DISREGARD PRINTS BEARING EARLIER REVISION DATES

REVISION DATES: 1-04-09 3-22-10 4-5-10

SHEET 4 OF 9

FILE => 04-3a9801-b-det01.dgn

USERNAME => s136467 DATE PLOTTED => 14-MAR-2011 TIME PLOTTED => 11:40

DIST	COUNTY	ROUTE	POST MILES TOTAL PROJECT	SHEET NO	TOTAL SHEETS
04	SCI	101	47.9/52.2	27	31

REGISTERED CIVIL ENGINEER 3-21-10 DATE

10-25-10
PLANS APPROVAL DATE

REGISTERED PROFESSIONAL ENGINEER MIKE VAN DE POL No. 35610 Exp. 9-30-11 CIVIL STATE OF CALIFORNIA

The State of California or its officers or agents shall not be responsible for the accuracy or completeness of electronic copies of this plan sheet.

NOTE:
THE CONTRACTOR SHALL VERIFY ALL CONTROLLING FIELD DIMENSIONS BEFORE ORDERING OR FABRICATING ANY MATERIAL.

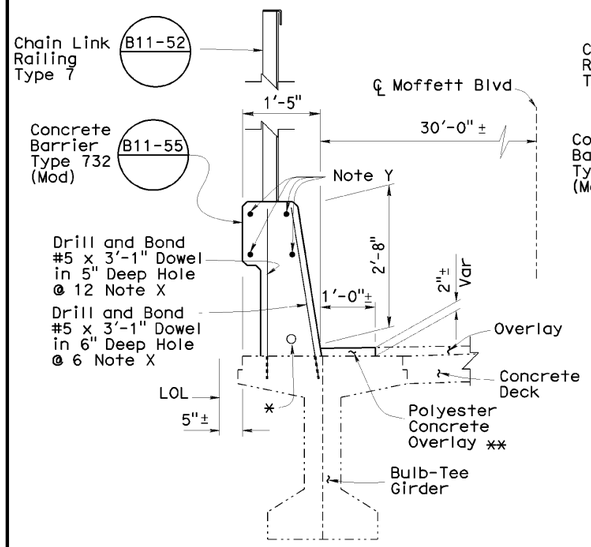

BRIDGE DECK

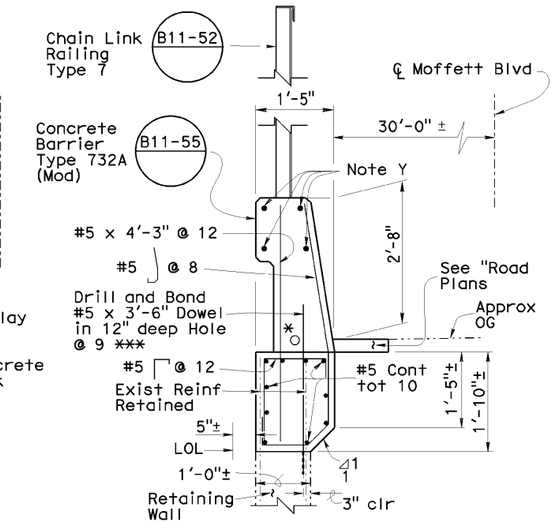

RETAINING WALL

LEFT SIDE

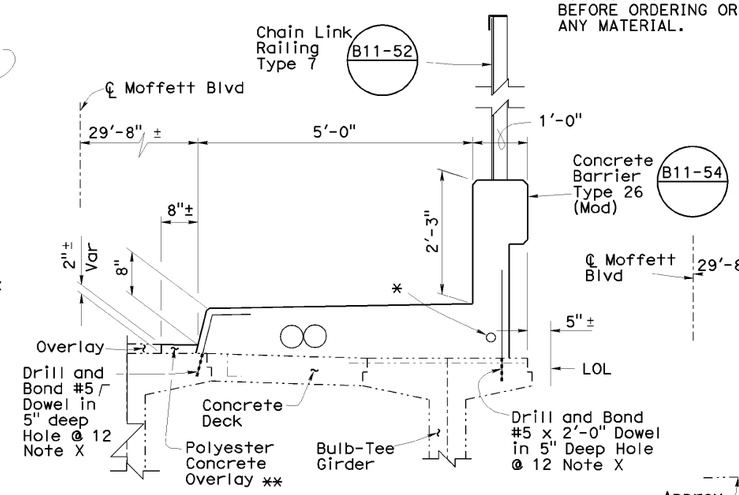

BRIDGE DECK

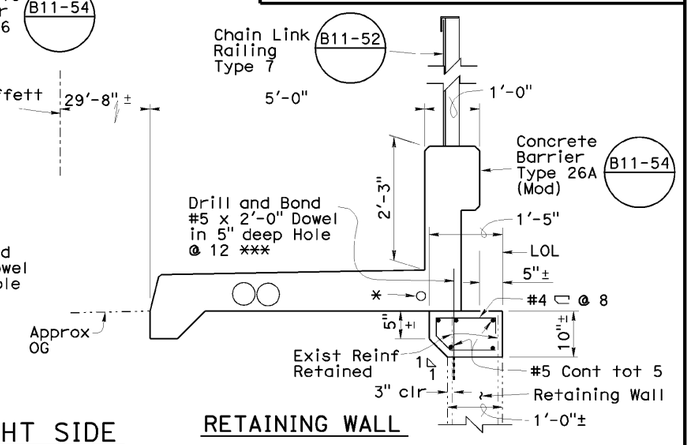

RETAINING WALL

RIGHT SIDE

Note X
Adjust Dowels to Clear Girder Reinforcement

MOFFETT BOULEVARD OVERCROSSING

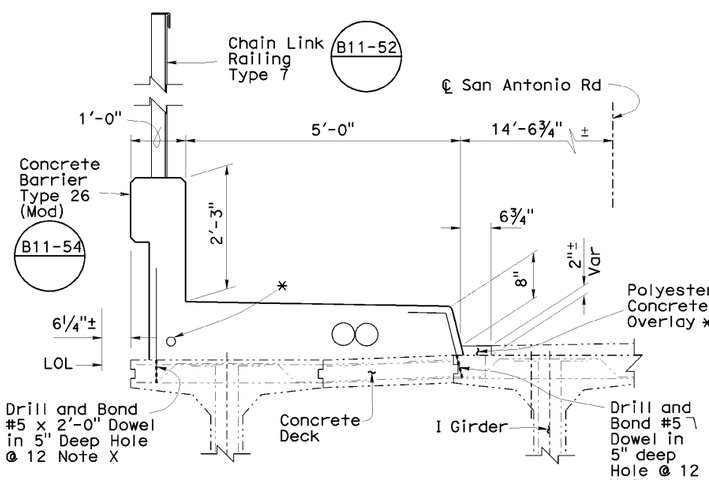

BRIDGE DECK

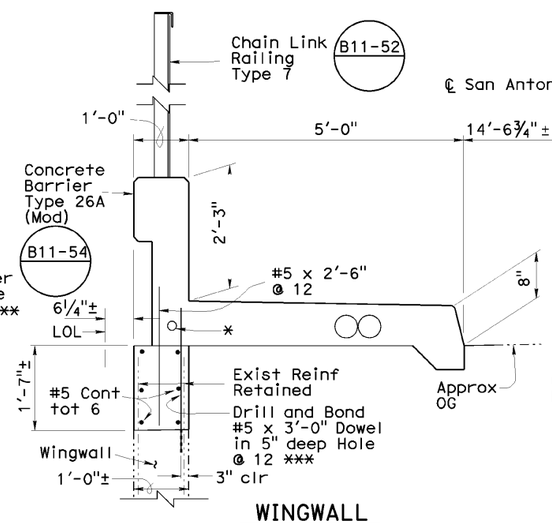

WINGWALL

LEFT SIDE

Note Y
#7 Continuous Total 4
Place in Addition to Standard Barrier Reinforcement,
Bundle With Continuous #5
Standard Reinforcement

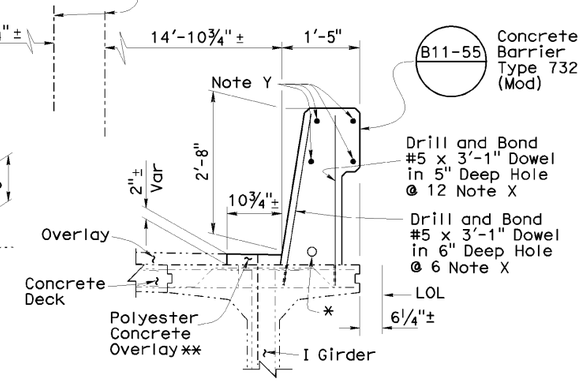

BRIDGE DECK

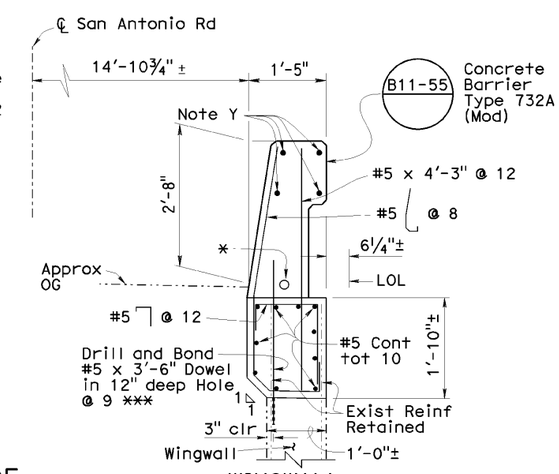

WINGWALL

RIGHT SIDE

* 2" dia Electrical Conduit. See "Road Plans"
** Match Existing Grade and Cross Slope
*** Evenly Space Between Retained Reinf. Min 3" clr to Exist Reinf

All Barrier Reinforcement not Shown
For Removal Details, see "Details No. 1" Sheet
For Added Details, see "Road Plans"
-·-·-·- Denotes existing structure
——— Denotes new construction

Structure Sides Shown, Based on Looking Ahead on ℄ Stationing

SAN ANTONIO ROAD OVERCROSSING

NEW CONSTRUCTION DETAILS

¾" = 1'-0"

	BY	CHECKED
DESIGN	Mike Van De Pol	John O'Brien
DETAILS	Mike Van De Pol	John O'Brien
QUANTITIES	Mike Van De Pol	John O'Brien

STATE OF CALIFORNIA
DEPARTMENT OF TRANSPORTATION

DIVISION OF ENGINEERING SERVICES
STRUCTURE DESIGN
DESIGN BRANCH 9

BRIDGE NO. Various
POST MILE Varies

BARRIER REPLACEMENT
ROUTE 101 BRIDGES
DETAILS No. 2

STRUCTURES DESIGN DETAIL SHEET (ENGLISH) (REV. 10/25/05)

ORIGINAL SCALE IN INCHES FOR REDUCED PLANS 0 1 2 3

CU 04
EA 3A9801

DISREGARD PRINTS BEARING EARLIER REVISION DATES

REVISION DATES: 7-01-03 3-22-10 4-21-10

SHEET 5 OF 9

FILE => 04-3a9801-b-det02.dgn

USERNAME => s136467 DATE-PLOTTED => 14-MAR-2011 TIME-PLOTTED => 11:40

DIST	COUNTY	ROUTE	POST MILES TOTAL PROJECT	SHEET NO	TOTAL SHEETS
04	SCI	101	47.9/52.2	28	31

REGISTERED CIVIL ENGINEER 3-21-10 DATE

10-25-10
PLANS APPROVAL DATE

REGISTERED PROFESSIONAL ENGINEER MIKE VAN DE POL No. 35610 Exp. 9-30-11 CIVIL STATE OF CALIFORNIA

The State of California or its officers or agents shall not be responsible for the accuracy or completeness of electronic copies of this plan sheet.

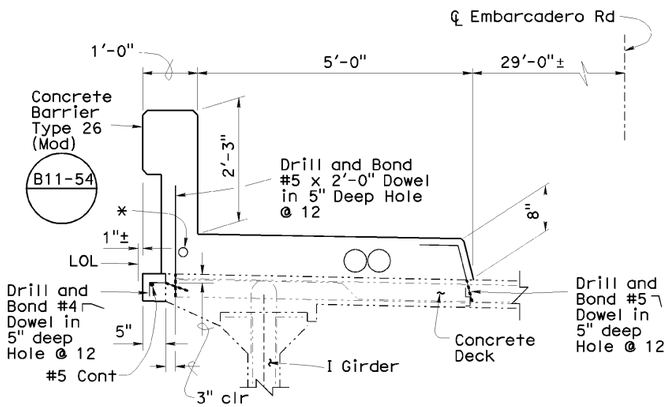

BRIDGE DECK

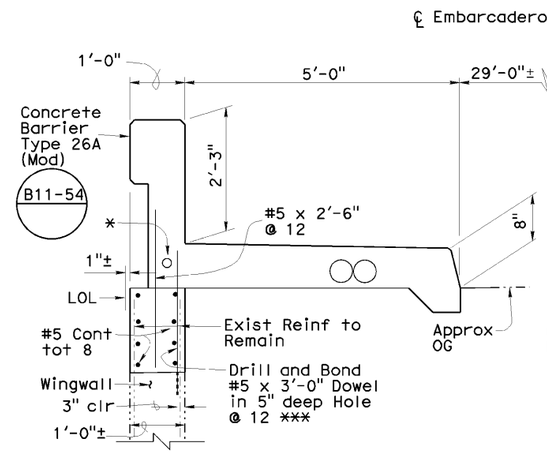

WINGWALL

LEFT SIDE

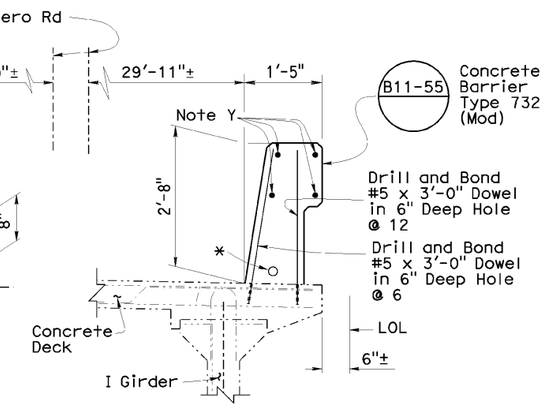

BRIDGE DECK

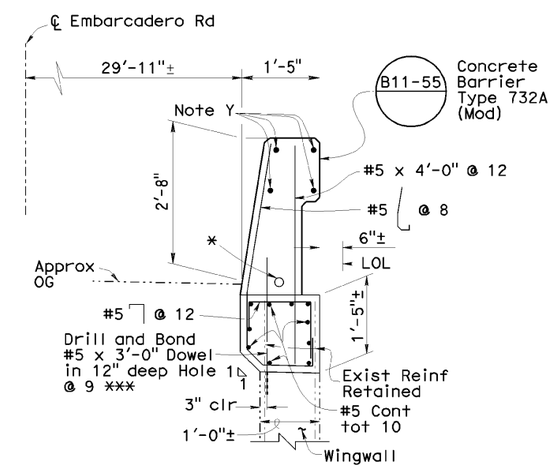

WINGWALL

RIGHT SIDE

EMBARCADERO ROAD OVERCROSSING

NEW CONSTRUCTION DETAILS

3/4" = 1'-0"

Note Y
#7 Continuous Total 4
Place in Addition to Standard Barrier Reinforcement,
Bundle with Continuous #5 Standard Reinforcement

Structure Sides Shown, Based on Looking Ahead on ℄ Stationing

* 2" dia Electrical Conduit. See "Road Plans"
** Match Existing Grade and Cross Slope
*** Evenly Space Between Retained Reinf. Min 3" clr to Exist Reinf
All Barrier Reinforcement not Shown
For Removal Details, see "Details No. 1" Sheet
For Added Details, see "Road Plans"
-·-·-·-·- Denotes existing structure
———— Denotes new construction

NOTE:
THE CONTRACTOR SHALL VERIFY ALL CONTROLLING FIELD DIMENSIONS BEFORE ORDERING OR FABRICATING ANY MATERIAL.

	BY	CHECKED
DESIGN	Mike Van De Pol	John O'Brien
DETAILS	Mike Van De Pol	John O'Brien
QUANTITIES	Mike Van De Pol	John O'Brien

STATE OF CALIFORNIA
DEPARTMENT OF TRANSPORTATION

DIVISION OF ENGINEERING SERVICES
STRUCTURE DESIGN
DESIGN BRANCH 9

BRIDGE NO. Various
POST MILE Varies

BARRIER REPLACEMENT
ROUTE 101 BRIDGES
DETAILS No. 3

STRUCTURES DESIGN DETAIL SHEET (ENGLISH) (REV. 10/25/05)

ORIGINAL SCALE IN INCHES FOR REDUCED PLANS 0 1 2 3

CU 04
EA 3A9801

DISREGARD PRINTS BEARING EARLIER REVISION DATES → 7-01-03 3-25-10 4-21-10

REVISION DATES

SHEET 6 OF 9

FILE => 04-3a9801-b-det03.dgn

USERNAME => s136467 DATE PLOTTED => 14-MAR-2011 TIME PLOTTED => 11:40

DIST	COUNTY	ROUTE	POST MILES TOTAL PROJECT	SHEET NO	TOTAL SHEETS
04	SCI	101	47.9/52.2	29	31

REGISTERED CIVIL ENGINEER 3-21-10 DATE

10-25-10
PLANS APPROVAL DATE

REGISTERED PROFESSIONAL ENGINEER MIKE VAN DE POL No. 35610 Exp. 9-30-11 CIVIL STATE OF CALIFORNIA

The State of California or its officers or agents shall not be responsible for the accuracy or completeness of electronic copies of this plan sheet.

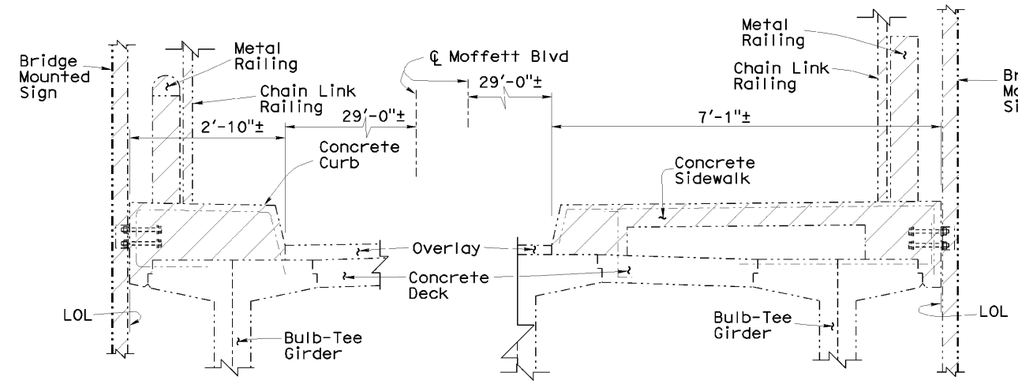

LEFT SIDE RIGHT SIDE

REMOVAL DETAILS

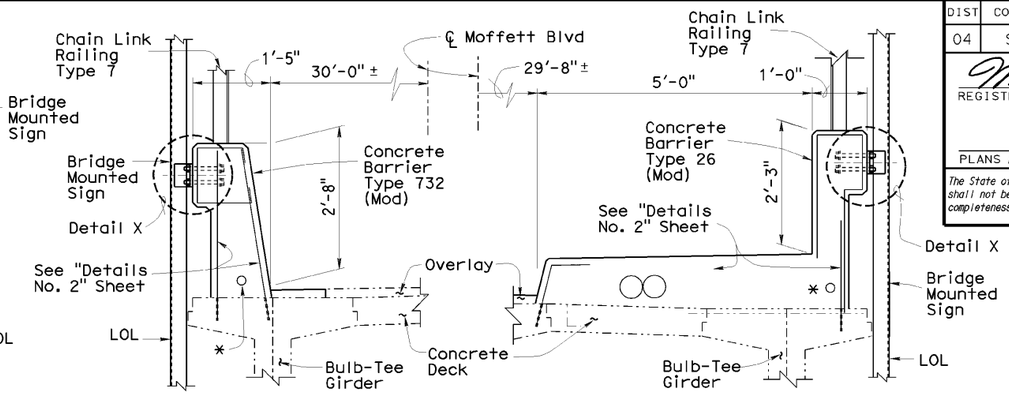

LEFT SIDE RIGHT SIDE

NEW CONSTRUCTION DETAILS

Existing Signs Shall be Removed and Replaced with New. For Sign and Light Standard Removal and Replacement Details, see "Road Plans". For Electrical Details see "Road Plans"

For Detail X, Detail Y and Detail Z, see "Details No. 6" Sheet

MOFFETT BOULEVARD OVERCROSSING

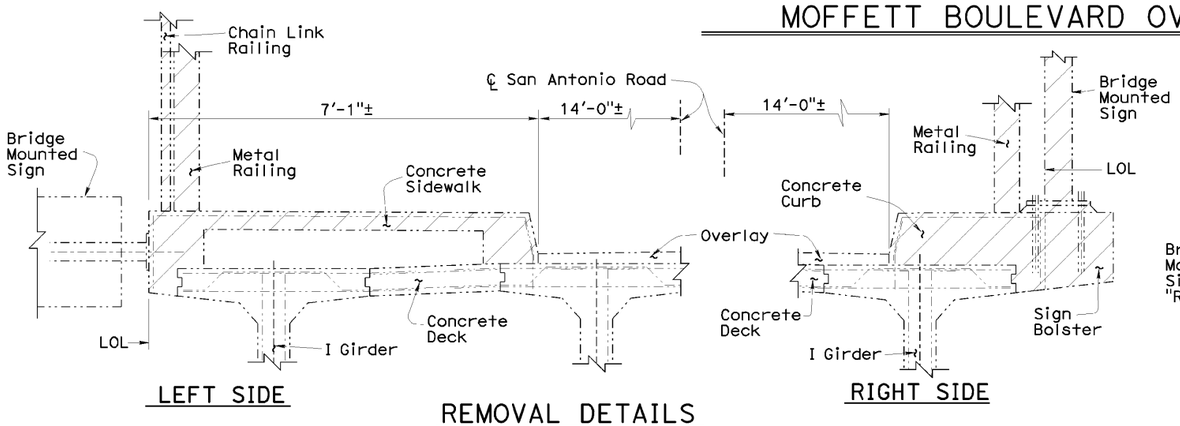

LEFT SIDE RIGHT SIDE

REMOVAL DETAILS

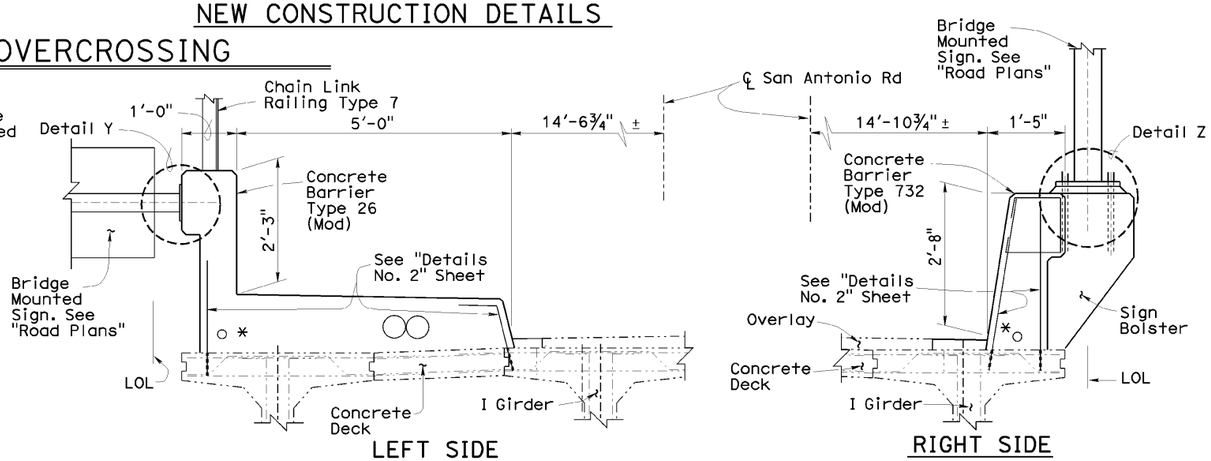

LEFT SIDE RIGHT SIDE

NEW CONSTRUCTION DETAILS

SAN ANTONIO ROAD OVERCROSSING

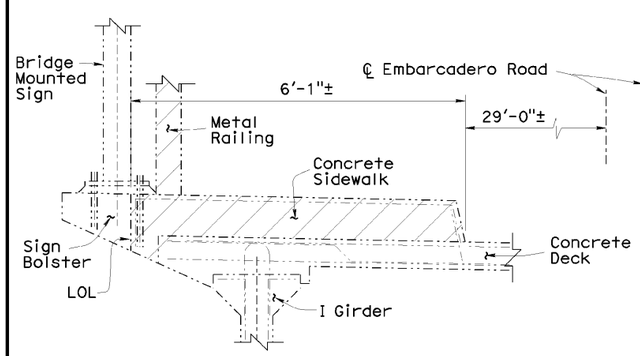

LEFT SIDE

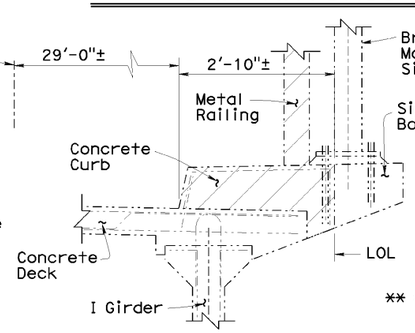

RIGHT SIDE

REMOVAL DETAILS

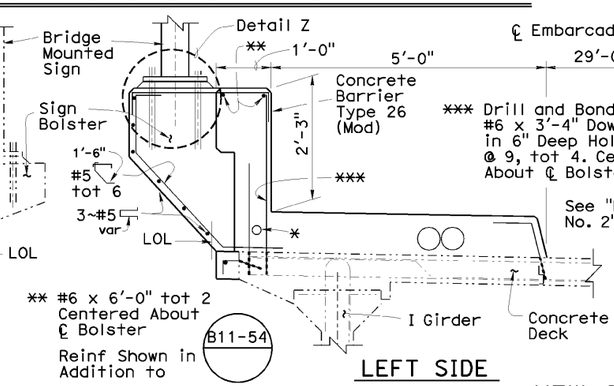

LEFT SIDE

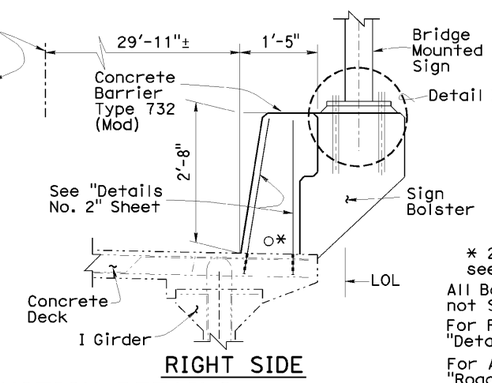

RIGHT SIDE

NEW CONSTRUCTION DETAILS

EMBARCADERO ROAD OVERCROSSING

For Bolster Reinf, see B11-55

Denotes Limits of Removal of Existing Concrete Curb and Sidewalk, Deck Overhang, Metal Railing, Chain Link Railing and Signs

* 2" dia Elect Conduit, see "Road Plans"

All Barrier Reinforcement not Shown

For Removal Details, see "Details No. 1" Sheet

For Added Details, see "Road Plans"

-·-·-·- Denotes existing structure

——— Denotes new construction

NOTE:
THE CONTRACTOR SHALL VERIFY ALL CONTROLLING FIELD DIMENSIONS BEFORE ORDERING OR FABRICATING ANY MATERIAL.

SIGN DETAILS

¾" = 1'-0"

Structure Sides Shown, Based on Looking Ahead on ℄ Stationing

	BY	CHECKED
DESIGN	Mike Van De Pol	John O'Brien
DETAILS	Mike Van De Pol	John O'Brien
QUANTITIES	Mike Van De Pol	John O'Brien

STATE OF CALIFORNIA
DEPARTMENT OF TRANSPORTATION

DIVISION OF ENGINEERING SERVICES
STRUCTURE DESIGN
DESIGN BRANCH 9

BRIDGE NO. Various
POST MILE Varies

BARRIER REPLACEMENT
ROUTE 101 BRIDGES
DETAILS No. 4

STRUCTURES DESIGN DETAIL SHEET (ENGLISH) (REV. 10/25/05)

ORIGINAL SCALE IN INCHES FOR REDUCED PLANS 0 1 2 3

CU 04
EA 3A9801

DISREGARD PRINTS BEARING EARLIER REVISION DATES

REVISION DATES 7-01-03 7-28-10 4-5-10

SHEET 7 OF 9

FILE => 04-3a9801-b-det04.dgn

USERNAME => s136467 DATE PLOTTED => 14-MAR-2011 TIME PLOTTED => 11:40

DIST	COUNTY	ROUTE	POST MILES TOTAL PROJECT	SHEET NO	TOTAL SHEETS
04	SCI	101	47.9/52.2	30	31

REGISTERED CIVIL ENGINEER 3-21-10 DATE

10-25-10
PLANS APPROVAL DATE

REGISTERED PROFESSIONAL ENGINEER MIKE VAN DE POL No. 35610 Exp. 9-30-11 CIVIL STATE OF CALIFORNIA

The State of California or its officers or agents shall not be responsible for the accuracy or completeness of electronic copies of this plan sheet.

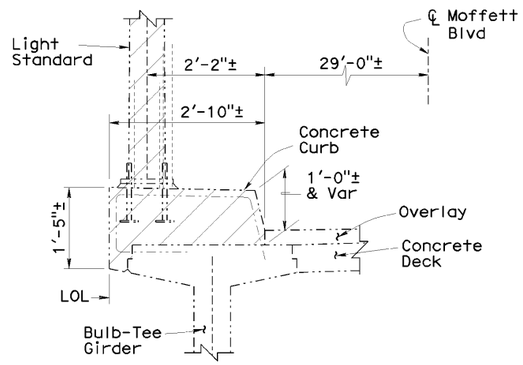

LEFT SIDE
BRIDGE DECK

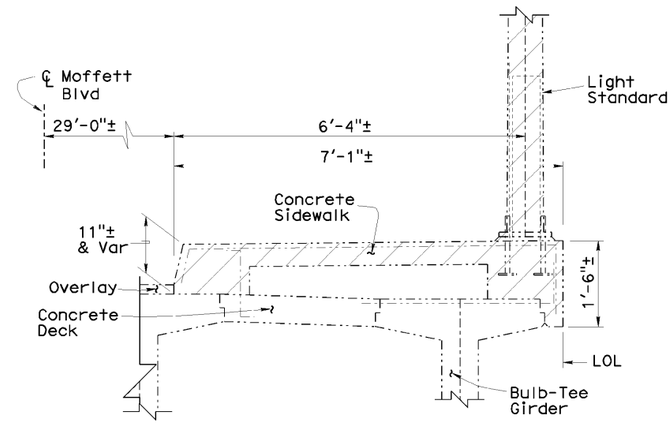

RIGHT SIDE
BRIDGE DECK

REMOVAL DETAILS

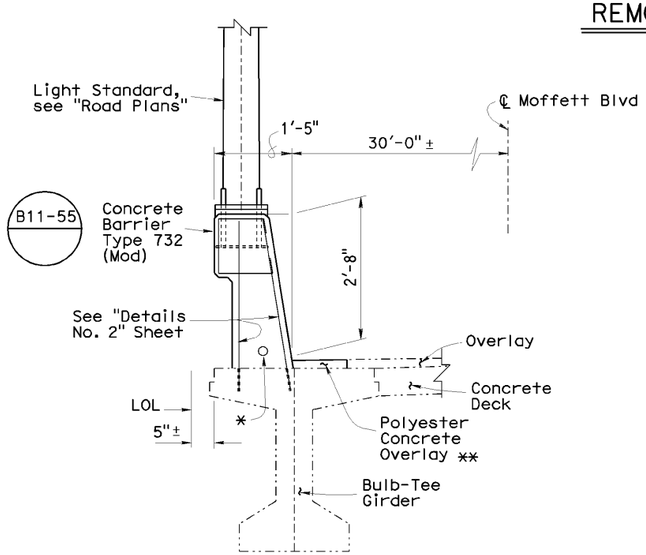

LEFT SIDE
BRIDGE DECK

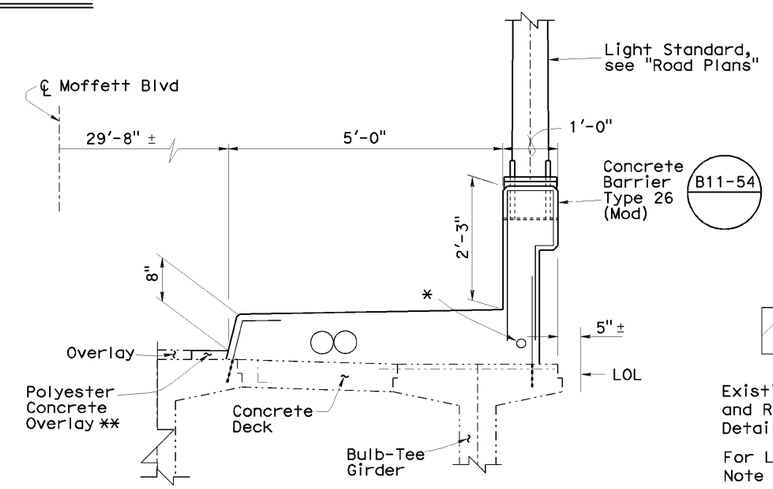

RIGHT SIDE
BRIDGE DECK

Denotes Limits of Removal of Existing Concrete Curb and Sidewalk, Deck Overhang, and Light Standard

Existing Light Standards Shall be Removed and Replaced with New. For Light Standard Details and Electrical Details, see "Road Plans"

For Light Standard Anchorage Details, see Note H on Standard Plan B11-54

For Light Standard Anchorage Details, see Note F on Standard Plan B11-55

For Added Details, see "General Plan No.1", Sheet

* 2" dia Electrical Conduit. See "Road Plans"

** Match grade and cross slope

All Barrier Reinforcement not Shown

For Removal Details, see "Details No. 1" Sheet

For Added Details, see "Road Plans"

-·-·-·- Denotes existing structure

——— Denotes new construction

NEW CONSTRUCTION DETAILS

MOFFETT BOULEVARD OVERCROSSING

LIGHT STANDARD DETAILS

3/4" = 1'-0"

NOTE:
THE CONTRACTOR SHALL VERIFY ALL CONTROLLING FIELD DIMENSIONS BEFORE ORDERING OR FABRICATING ANY MATERIAL.

	BY	CHECKED
DESIGN	Mike Van De Pol	John O'Brien
DETAILS	Mike Van De Pol	John O'Brien
QUANTITIES	Mike Van De Pol	John O'Brien

STATE OF CALIFORNIA
DEPARTMENT OF TRANSPORTATION

DIVISION OF ENGINEERING SERVICES
STRUCTURE DESIGN
DESIGN BRANCH 9

BRIDGE NO. Various
POST MILE Varies

BARRIER REPLACEMENT
ROUTE 101 BRIDGES
DETAILS No. 5

STRUCTURES DESIGN DETAIL SHEET (ENGLISH) (REV. 10/25/05)

ORIGINAL SCALE IN INCHES FOR REDUCED PLANS 0 1 2 3

CU 04
EA 3A9801

DISREGARD PRINTS BEARING EARLIER REVISION DATES

REVISION DATES 7-01-09 3-22-10

SHEET 8 OF 9

FILE => 04-3a9801-b-det05.dgn

USERNAME => s136467 DATE PLOTTED => 14-MAR-2011 TIME PLOTTED => 11:40

DIST	COUNTY	ROUTE	POST MILES TOTAL PROJECT	SHEET NO	TOTAL SHEETS
04	SCI	101	47.9/52.2	31	31

REGISTERED CIVIL ENGINEER 3-21-10 DATE

10-25-10
PLANS APPROVAL DATE

REGISTERED PROFESSIONAL ENGINEER MIKE VAN DE POL No. 35610 Exp. 9-30-11 CIVIL STATE OF CALIFORNIA

The State of California or its officers or agents shall not be responsible for the accuracy or completeness of electronic copies of this plan sheet.

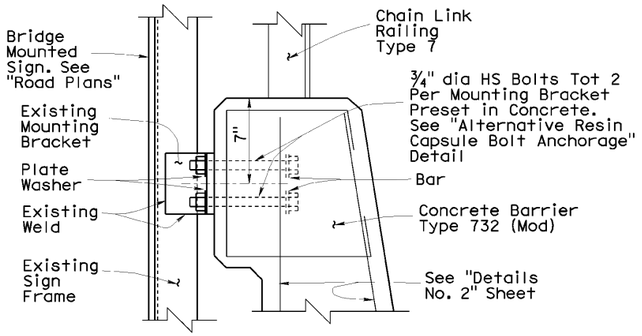

DETAIL X

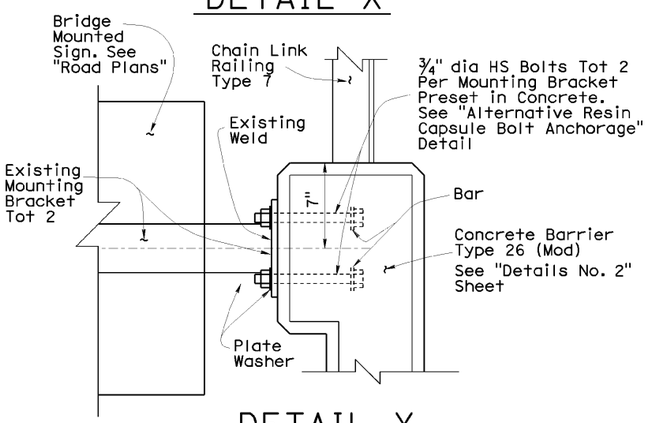

DETAIL Y

No Scale

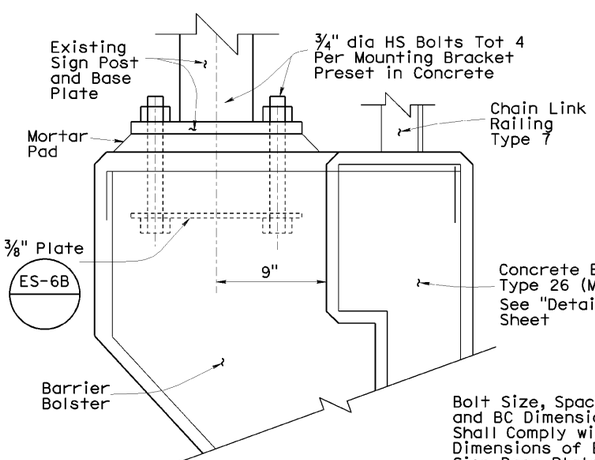

Bolt Size, Spacing and BC Dimension Shall Comply with Dimensions of Exist Sign Base Plate

For Added Sign Details, see "Road Plans

DETAIL Z

No Scale

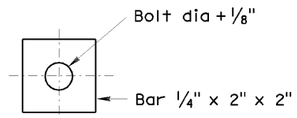

PLATE WASHER

For All Slotted Holes
No Scale

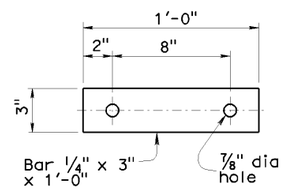

BAR DETAIL

No Scale

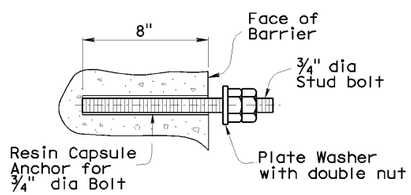

ALTERNATIVE RESIN CAPSULE BOLT ANCHORAGE

No Scale

For Locations of Detail X, Detail Y and Detail Z, see "Details No. 4" Sheet

For Barrier Bolster Reinforcement, see and "Detail No. 4" Sheet (B11-55)

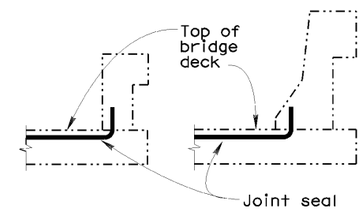

JOINT SEAL AT LOW SIDE OF DECK

No Scale

Details shown for illustration purposes only. For use only where deck joint matches the barrier rail joint

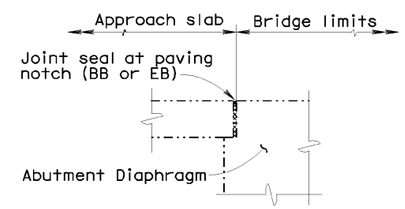

JOINT SEAL LOCATION

No Scale

The following notes apply to JOINT SEAL TYPE B:

1. Seal must satisfy both minimum Movement Rating (MR) and minimum W1 requirements
2. Minimum W1 is the calculated maximum width of the joint based on field measurements. After the joints have been cleaned, minimum W1 is to be recalculated by the Engineer
3. W1 shall be the smaller of the values determined as follows:
   A) 0.85 times the manufacturer's designed minimum uncompressed width of seal
   B) The width of the seal on the third successive test cycle of the pressure deflection test, when compressed to an average pressure of 3 psi
4. Bend Type B joint seal 6 inch up into curb or rail on the low side of the deck where deck joint matches curb or rail joint
5. For details not shown see (RSP B6-21)

JOINT SEAL TABLE

Bridge Location		Minimum MR (Inch)	Approximate Length (Foot)	Existing Waterstop	Approx. Depth to Clean Exp Joint (Inch)
EMBARCADERO ROAD OC	Abut 1	1½	69	NO	12
	Abut 5	1½	69	NO	12

DECK REPAIR TABLE

REMOVE UNSOUND CONCRETE AND RAPID SETTING CONCRETE (PATCH)

Bridge Location	Approximate Depth (Inch)	Approximate Volume (ft3)
EMBARCADERO ROAD OC	3"	125

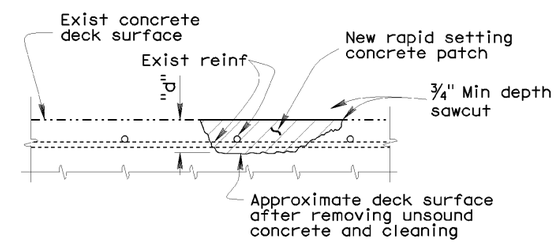

DECK REPAIR DETAIL

No Scale

Locations, area and depth of deck removal and replacement to be determined by the Engineer. For approximate locations, see "General Plan No. 3" sheet. Reinforcement may be encountered during deck concrete removal. Existing Reinforcement to remain

Denotes Approximate Volume of Deck Concrete to be Removed and Replaced. Existing Deck Reinf to Remain.

Denotes existing structure

Denotes new construction

NOTE:
THE CONTRACTOR SHALL VERIFY ALL CONTROLLING FIELD DIMENSIONS BEFORE ORDERING OR FABRICATING ANY MATERIAL.

	BY	CHECKED
DESIGN	Mike Van De Pol	John O'Brien
DETAILS	Tim Fairall	John O'Brien
QUANTITIES	Mike Van De Pol	John O'Brien

STATE OF CALIFORNIA
DEPARTMENT OF TRANSPORTATION

DIVISION OF ENGINEERING SERVICES
STRUCTURE DESIGN
DESIGN BRANCH 9

BRIDGE NO. Various
POST MILE Varies

BARRIER REPLACEMENT
ROUTE 101 BRIDGES
DETAILS No. 6

STRUCTURES DESIGN DETAIL SHEET (ENGLISH) (REV. 10/25/05)

ORIGINAL SCALE IN INCHES FOR REDUCED PLANS 0 1 2 3

CU 04
EA 3A9801

DISREGARD PRINTS BEARING EARLIER REVISION DATES

REVISION DATES: 7-01-03, 3-22-10

SHEET 9 OF 9

FILE => 04-3a9801-b-det06a.dgn

USERNAME => s136467 DATE PLOTTED => 14-MAR-2011 TIME PLOTTED => 11:40