Dist	COUNTY	ROUTE	POST MILES TOTAL PROJECT	SHEET No.	TOTAL SHEETS
04	SM	101	12.0/13.5	1	56

INDEX OF PLANS

SHEET No.	DESCRIPTION
1	TITLE SHEET
2 - 3	TYPICAL CROSS SECTIONS
4 - 12	CONSTRUCTION DETAILS
13 - 18	CONSTRUCTION AREA SIGNS
19 - 29	PAVEMENT DELINEATION PLAN AND QUANTITIES
30 - 34	SUMMARY OF QUANTITIES
35 - 41	ELECTRICAL PLANS
42 - 56	REVISED AND NEW STANDARD PLANS

THE STANDARD PLANS LIST APPLICABLE TO THIS CONTRACT IS INCLUDED IN THE NOTICE TO BIDDERS AND SPECIAL PROVISIONS BOOK.

STATE OF CALIFORNIA

DEPARTMENT OF TRANSPORTATION

PROJECT PLANS FOR CONSTRUCTION ON

STATE HIGHWAY

IN SAN MATEO COUNTY
IN SAN MATEO
FROM 0.1 MILE NORTH OF FASHION ISLAND BOULEVARD TO 0.1 MILE NORTH OF THIRD AVENUE OVERCROSSING

TO BE SUPPLEMENTED BY STANDARD PLANS DATED MAY 2006

LOCATION MAP

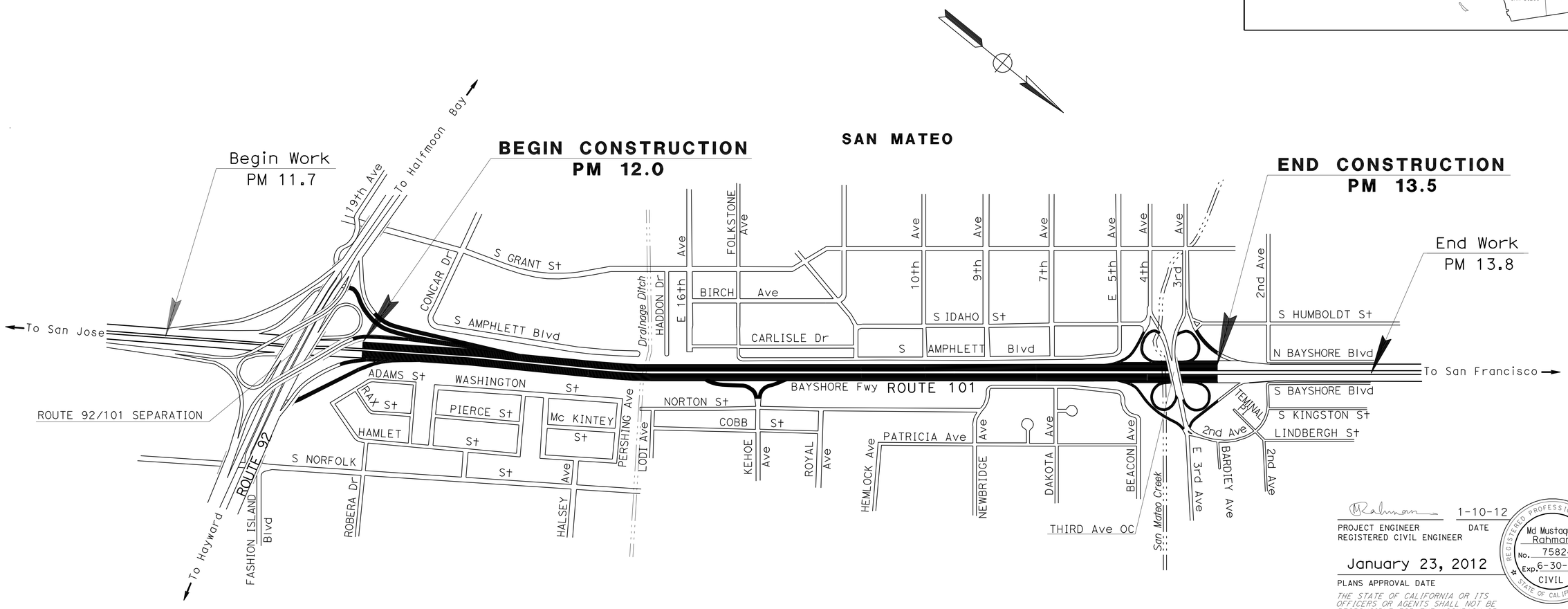

NO SCALE

PROJECT ENGINEER
REGISTERED CIVIL ENGINEER

1-10-12
DATE

January 23, 2012
PLANS APPROVAL DATE

REGISTERED PROFESSIONAL ENGINEER
Md Mustaqur Rahman
No. 75824
Exp. 6-30-12
CIVIL
STATE OF CALIFORNIA

THE STATE OF CALIFORNIA OR ITS OFFICERS OR AGENTS SHALL NOT BE RESPONSIBLE FOR THE ACCURACY OR COMPLETENESS OF SCANNED COPIES OF THIS PLAN SHEET.

THE CONTRACTOR SHALL POSSESS THE CLASS (OR CLASSES) OF LICENSE AS SPECIFIED IN THE "NOTICE TO BIDDERS."

PROJECT MANAGER: RAMSES SARGISS
DESIGN ENGINEER: RONNIE CHUA

CONTRACT No.	04-2E5604
PROJECT ID	0400021099

LAST REVISION 01-10-12
DATE PLOTTED => 01-FEB-2012
TIME PLOTTED => 09:09

Dist	COUNTY	ROUTE	POST MILES TOTAL PROJECT	SHEET No.	TOTAL SHEETS
04	SM	101	12.0/13.5	2	56

REGISTERED CIVIL ENGINEER 1-10-12 DATE

1-23-12
PLANS APPROVAL DATE

REGISTERED PROFESSIONAL ENGINEER Md Mustaqur Rahman No. 75824 Exp. 6-30-12 CIVIL STATE OF CALIFORNIA

THE STATE OF CALIFORNIA OR ITS OFFICERS OR AGENTS SHALL NOT BE RESPONSIBLE FOR THE ACCURACY OR COMPLETENESS OF SCANNED COPIES OF THIS PLAN SHEET.

NOTES:

1. DIMENSIONS OF THE PAVEMENT STRUCTURES (STRUCTURAL SECTIONS) ARE SUBJECT TO TOLERANCES SPECIFIED IN THE STANDARD SPECIFICATIONS.
2. DIMENSIONS SHOWN FOR THE EXISTING PAVEMENT STRUCTURAL SECTIONS ARE TAKEN FROM AS-BUILTS, ACTUAL THICKNESS MAY VARY.

ABBREVIATION:

BWC - G BONDED WEARING COARSE -GAP GRADED

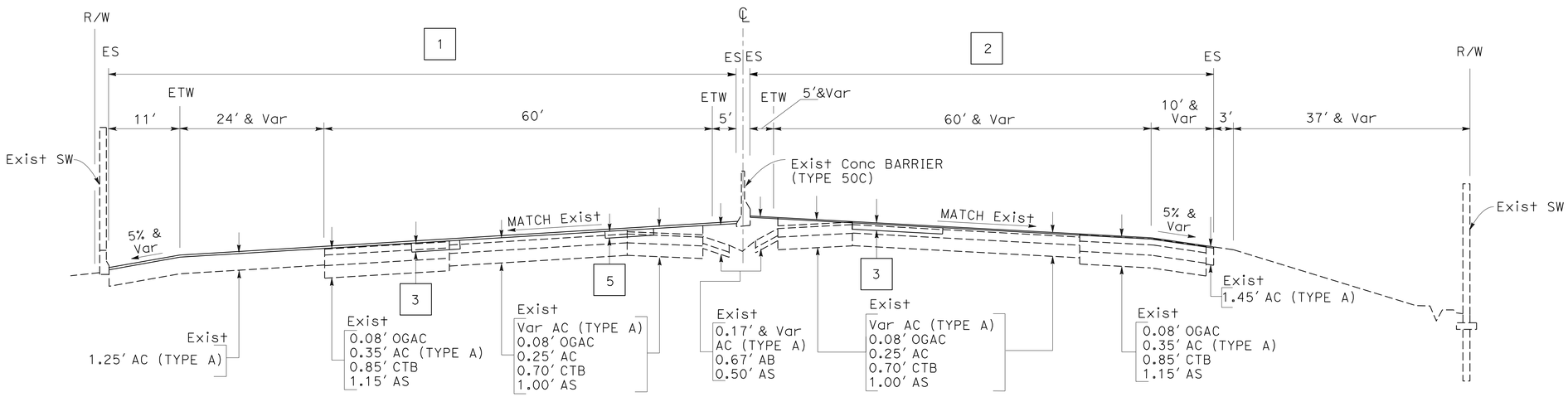

SOUTHBOUND
PM 12.45 TO 12.70

NORTHBOUND
PM 12.38 TO 12.63 & 13.44 TO 13.45

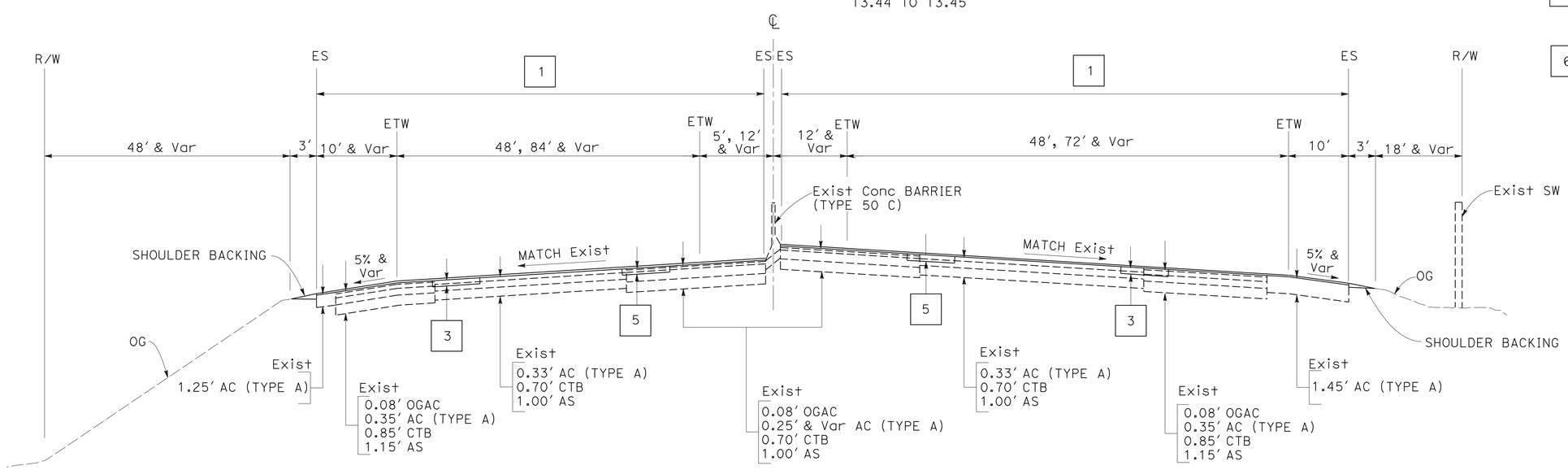

SOUTHBOUND
PM 12.00 TO 12.45

NORTHBOUND
PM 12.00 TO 12.38

LEGEND:

1	0.10' HMA (BWC-G)
2	0.10' HMA (BWC-G) 0.10' COLD PLANE AC PAVEMENT
3	0.35' HMA (TYPE A) 0.35' COLD PLANE AC PAVEMENT
4	0.10' HMA (BWC-G) 0.10' HMA (TYPE A) PAVING MAT 0.15' HMA (TYPE A) 0.35' COLD PLANE AC PAVEMENT
5	0.20' HMA (TYPE A) PAVING MAT 0.15' HMA (TYPE A) 0.35' COLD PLANE AC PAVEMENT
6	INDIVIDUAL SLAB REPLACEMENT (RAPID STRENGTH CONCRETE)

TYPICAL CROSS SECTIONS

NO SCALE

X-1

STATE OF CALIFORNIA - DEPARTMENT OF TRANSPORTATION
Caltrans® DESIGN
FUNCTIONAL SUPERVISOR RONNIE CHUA
CALCULATED-DESIGNED BY MUSTAQUR RAHMAN
CHECKED BY RONNIE CHUA
REVISED BY
DATE REVISED

LAST REVISION 01-24-12
DATE PLOTTED => 01-FEB-2012
TIME PLOTTED => 09:10

Dist	COUNTY	ROUTE	POST MILES TOTAL PROJECT	SHEET No.	TOTAL SHEETS
04	SM	101	12.0/13.5	3	56

REGISTERED CIVIL ENGINEER 1-10-12 DATE

1-23-12
PLANS APPROVAL DATE

REGISTERED PROFESSIONAL ENGINEER Md Mustaqur Rahman No. 75824 Exp. 6-30-12 CIVIL STATE OF CALIFORNIA

THE STATE OF CALIFORNIA OR ITS OFFICERS OR AGENTS SHALL NOT BE RESPONSIBLE FOR THE ACCURACY OR COMPLETENESS OF SCANNED COPIES OF THIS PLAN SHEET.

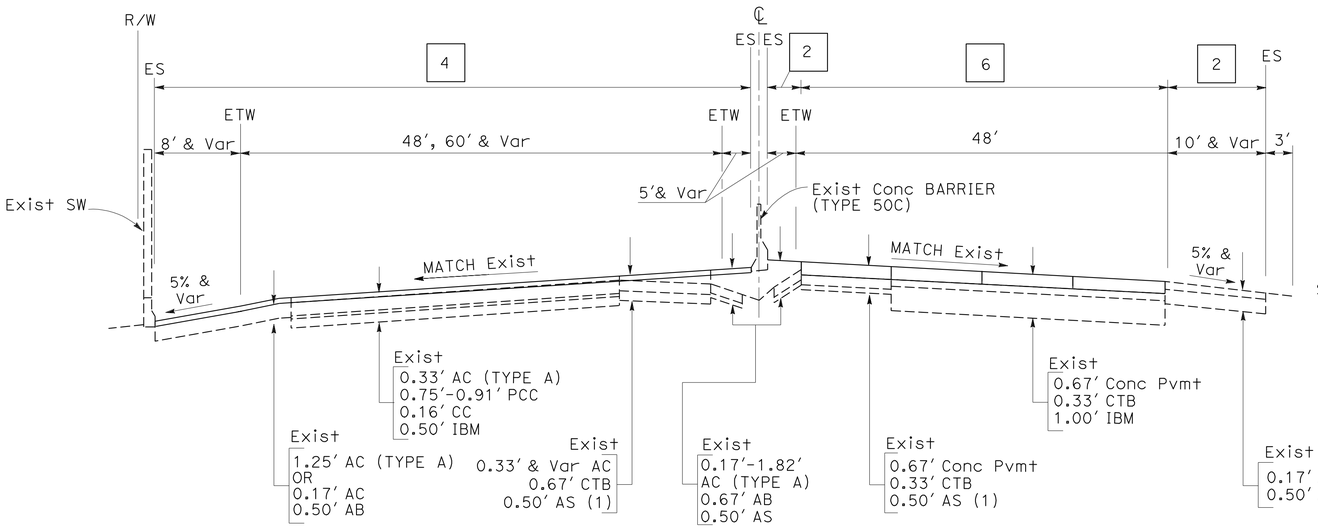

SOUTHBOUND
PM 13.38 TO 13.52

NORTHBOUND
PM 13.42 TO 13.44 &
13.45 TO 13.52

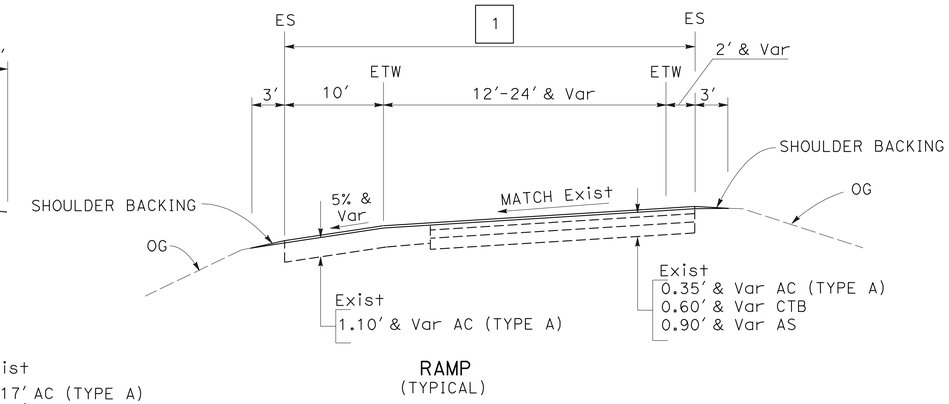

RAMP
(TYPICAL)

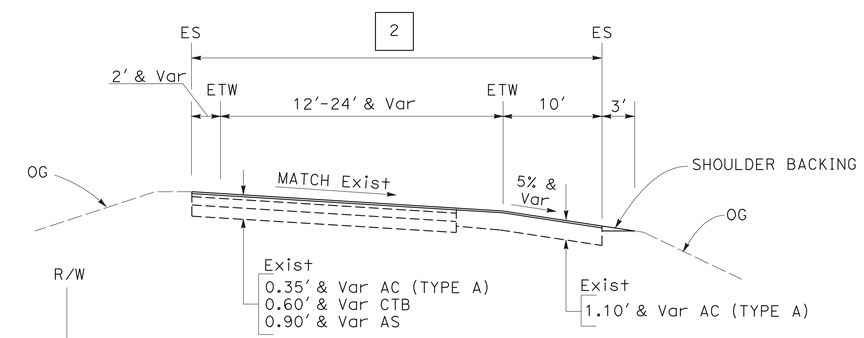

RAMP
(TYPICAL)

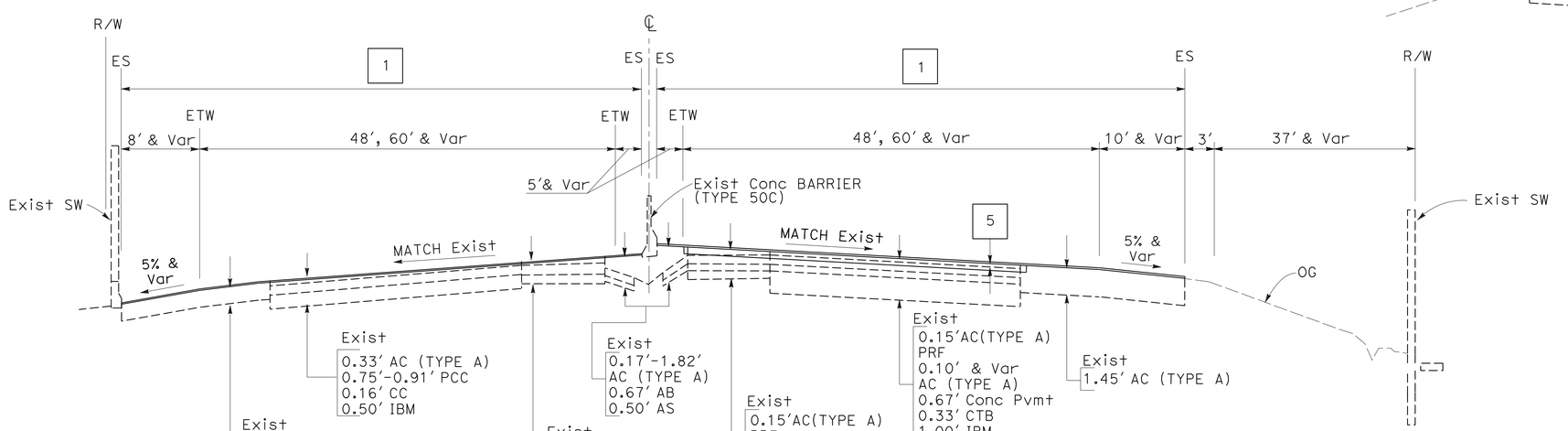

SOUTHBOUND
PM 12.70 TO 13.38

NORTHBOUND
PM 12.63 TO 13.42

TYPICAL CROSS SECTIONS

NO SCALE

FOR ABBREVIATION,NOTES, AND LEGEND SEE SHEET X-1

X-2

STATE OF CALIFORNIA - DEPARTMENT OF TRANSPORTATION
Caltrans®
DESIGN

FUNCTIONAL SUPERVISOR: RONNIE CHUA
CALCULATED-DESIGNED BY: MUSTAQUR RAHMAN
CHECKED BY: RONNIE CHUA
REVISED BY
DATE REVISED

LAST REVISION 12-14-11
DATE PLOTTED => 01-FEB-2012
TIME PLOTTED => 09:10

Dist	COUNTY	ROUTE	POST MILES TOTAL PROJECT	SHEET No.	TOTAL SHEETS
04	SM	101	12.0/13.5	4	56

REGISTERED CIVIL ENGINEER 1-10-12 DATE

1-23-12
PLANS APPROVAL DATE

REGISTERED PROFESSIONAL ENGINEER
Md Mustaqur Rahman
No. 75824
Exp. 6-30-12
CIVIL
STATE OF CALIFORNIA

THE STATE OF CALIFORNIA OR ITS OFFICERS OR AGENTS SHALL NOT BE RESPONSIBLE FOR THE ACCURACY OR COMPLETENESS OF SCANNED COPIES OF THIS PLAN SHEET.

LEGEND:

- PLACE 0.10' HMA (BWC-G)
- COLD PLANE 0.10' AC PAVEMENT AND PLACE 0.10' HMA (BWC-G)
- COLD PLANE 0.35' AC PAVEMENT AND PLACE 0.15' HMA (TYPE A), INSTALL PAVING MAT AND PLACE 0.20' HMA (TYPE A)
- CONFORM
- COLD PLANE 0.35' AC PAVEMENT AND PLACE 0.35' HMA (TYPE A)
- INDIVIDUAL SLAB REPLACEMENT (RSC)
- COLD PLANE 0.35' AC PAVEMENT AND PLACE 0.15' HMA (TYPE A), INSTALL PAVING MAT, PLACE 0.10' HMA (TYPE A) AND 0.10' HMA (BWC-G)

NOTE:

ALL THE DIS SHOULD BE LISTED AND CLEARLY MARKED IN THE FIELD BEFORE THE OVERLAY AND CLEAN THEM PROPERLY AFTER THE COMPLETION OF PAVING WORK.

ABBREVIATION:

BWC-G BONDED WEARING COARSE -GAP GRADED

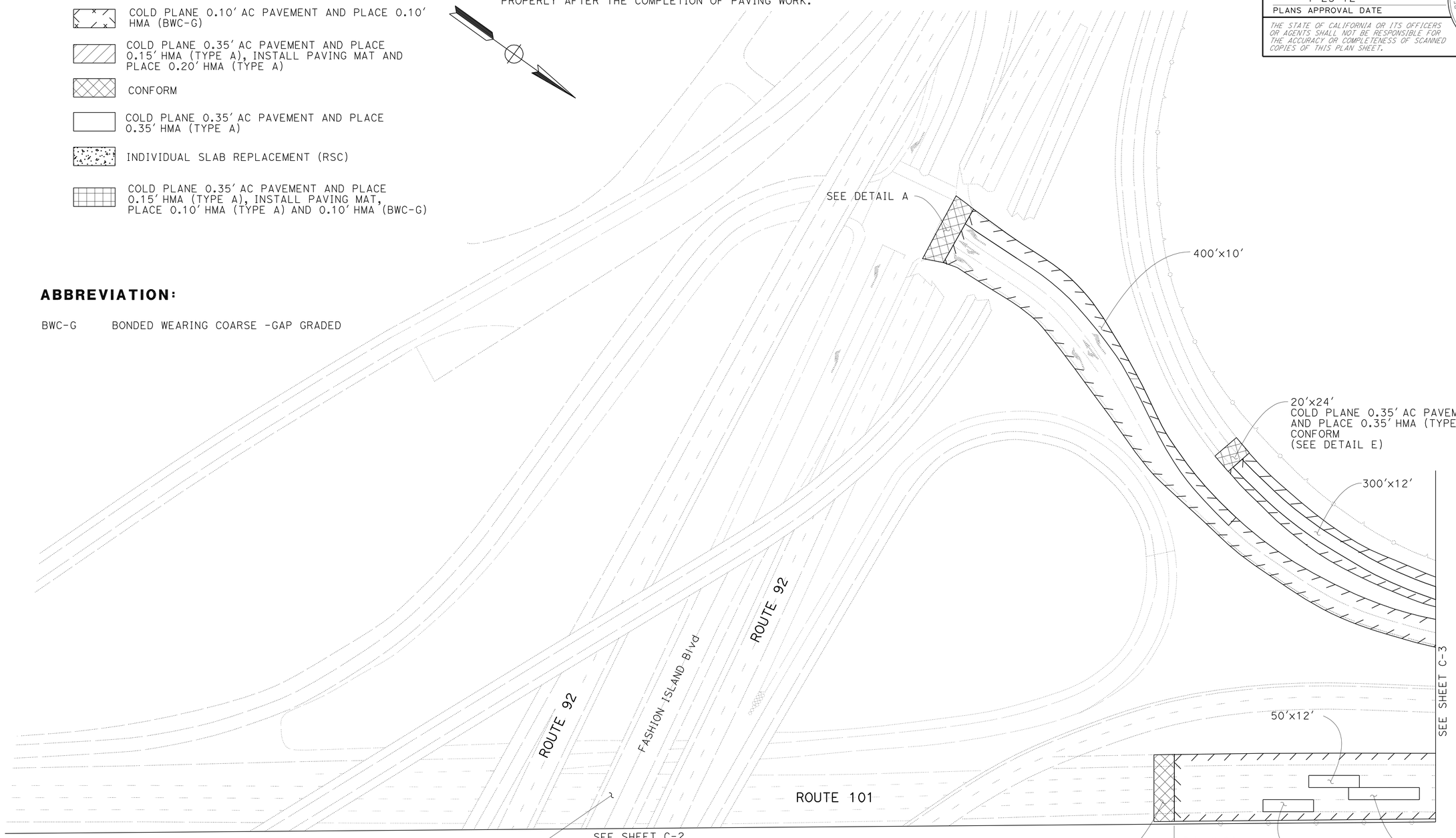

CONSTRUCTION DETAILS

NO SCALE

C-1

STATE OF CALIFORNIA - DEPARTMENT OF TRANSPORTATION
Caltrans
DESIGN

FUNCTIONAL SUPERVISOR: RONNIE CHUA
CALCULATED-DESIGNED BY: MUSTAQUR RAHMAN
CHECKED BY: RONNIE CHUA
REVISED BY
DATE REVISED

LAST REVISION 01-20-12
DATE PLOTTED => 01-FEB-2012
TIME PLOTTED => 09:10

Dist	COUNTY	ROUTE	POST MILES TOTAL PROJECT	SHEET No.	TOTAL SHEETS
04	SM	101	12.0/13.5	5	56

REGISTERED CIVIL ENGINEER 1-10-12 DATE

1-23-12
PLANS APPROVAL DATE

REGISTERED PROFESSIONAL ENGINEER
Md Mustaqur Rahman
No. 75824
Exp. 6-30-12
CIVIL
STATE OF CALIFORNIA

THE STATE OF CALIFORNIA OR ITS OFFICERS OR AGENTS SHALL NOT BE RESPONSIBLE FOR THE ACCURACY OR COMPLETENESS OF SCANNED COPIES OF THIS PLAN SHEET.

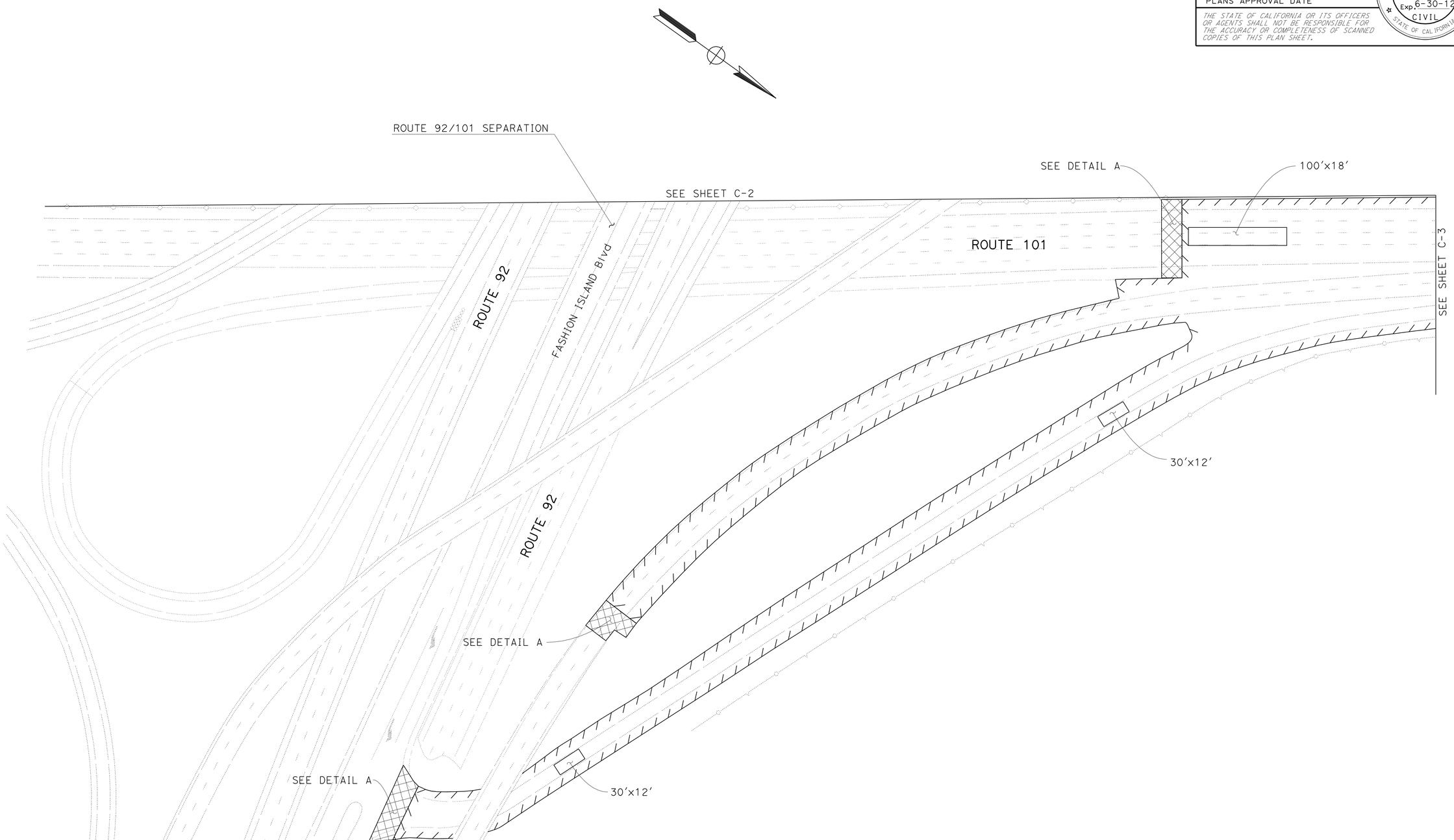

CONSTRUCTION DETAILS

NO SCALE

FOR ABBREVIATIONS, NOTES AND LEGEND, SEE SHEET C-1

C-2

REVISED BY | DATE REVISED

MUSTAQUR RAHMAN | RONNIE CHUA

CALCULATED-DESIGNED BY | CHECKED BY

FUNCTIONAL SUPERVISOR: RONNIE CHUA

STATE OF CALIFORNIA - DEPARTMENT OF TRANSPORTATION

Caltrans® DESIGN

LAST REVISION 12-14-11 | DATE PLOTTED => 01-FEB-2012 | TIME PLOTTED => 09:10

Dist	COUNTY	ROUTE	POST MILES TOTAL PROJECT	SHEET No.	TOTAL SHEETS
04	SM	101	12.0/13.5	6	56

REGISTERED CIVIL ENGINEER 1-10-12 DATE

1-23-12
PLANS APPROVAL DATE

REGISTERED PROFESSIONAL ENGINEER
Md Mustaqur Rahman
No. 75824
Exp. 6-30-12
CIVIL
STATE OF CALIFORNIA

THE STATE OF CALIFORNIA OR ITS OFFICERS OR AGENTS SHALL NOT BE RESPONSIBLE FOR THE ACCURACY OR COMPLETENESS OF SCANNED COPIES OF THIS PLAN SHEET.

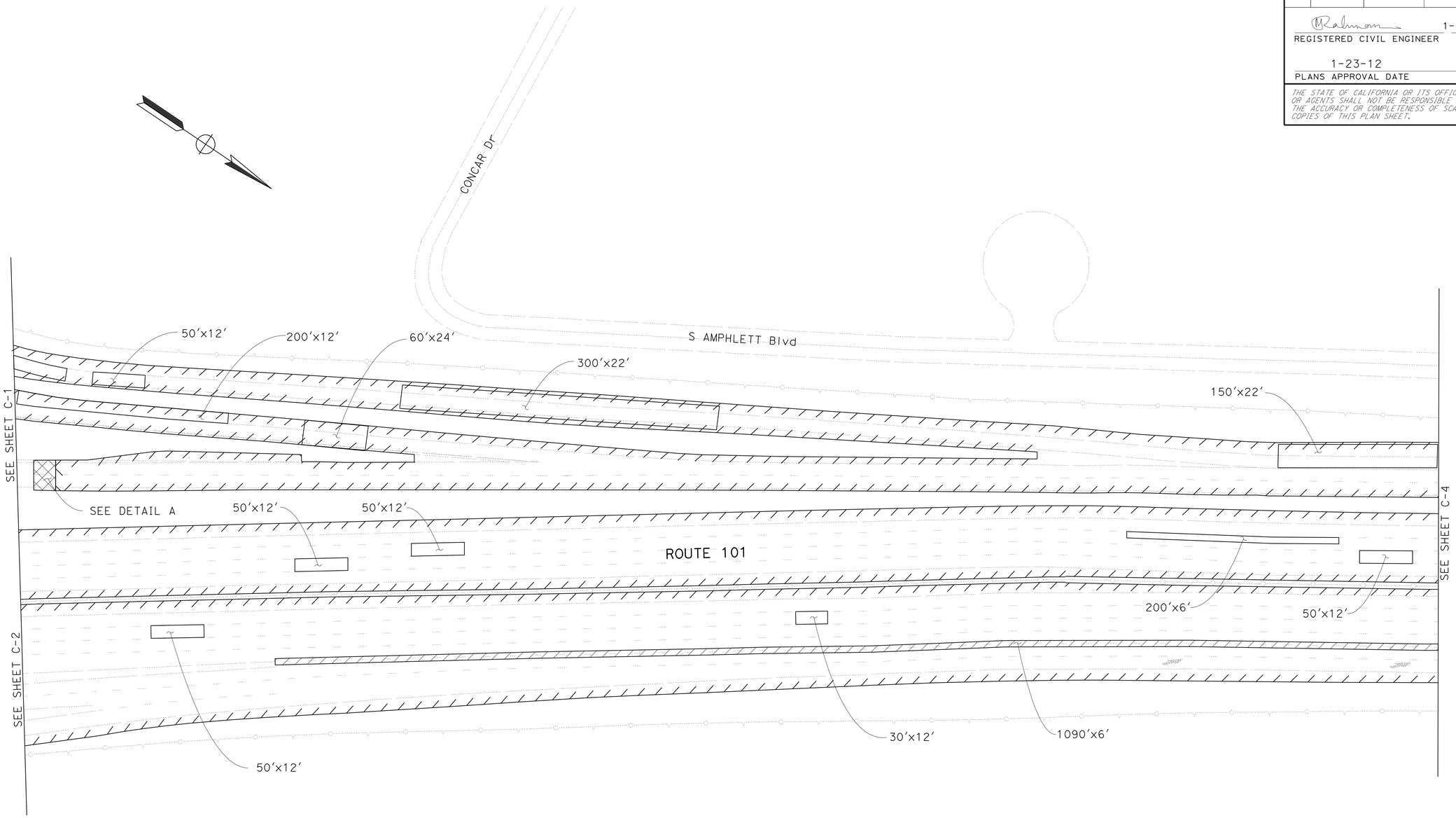

CONSTRUCTION DETAILS

NO SCALE

FOR ABBREVIATIONS, NOTES AND LEGEND, SEE SHEET C-1

C-3

STATE OF CALIFORNIA - DEPARTMENT OF TRANSPORTATION
Caltrans DESIGN

FUNCTIONAL SUPERVISOR: RONNIE CHUA
CALCULATED-DESIGNED BY: MUSTAQUR RAHMAN
CHECKED BY: RONNIE CHUA
REVISED BY
DATE REVISED

LAST REVISION 12-14-11
DATE PLOTTED => 01-FEB-2012
TIME PLOTTED => 09:10

Dist	COUNTY	ROUTE	POST MILES TOTAL PROJECT	SHEET No.	TOTAL SHEETS
04	SM	101	12.0/13.5	7	56

REGISTERED CIVIL ENGINEER 1-10-12 DATE

1-23-12
PLANS APPROVAL DATE

REGISTERED PROFESSIONAL ENGINEER
Md Mustaqur Rahman
No. 75824
Exp. 6-30-12
CIVIL
STATE OF CALIFORNIA

THE STATE OF CALIFORNIA OR ITS OFFICERS OR AGENTS SHALL NOT BE RESPONSIBLE FOR THE ACCURACY OR COMPLETENESS OF SCANNED COPIES OF THIS PLAN SHEET.

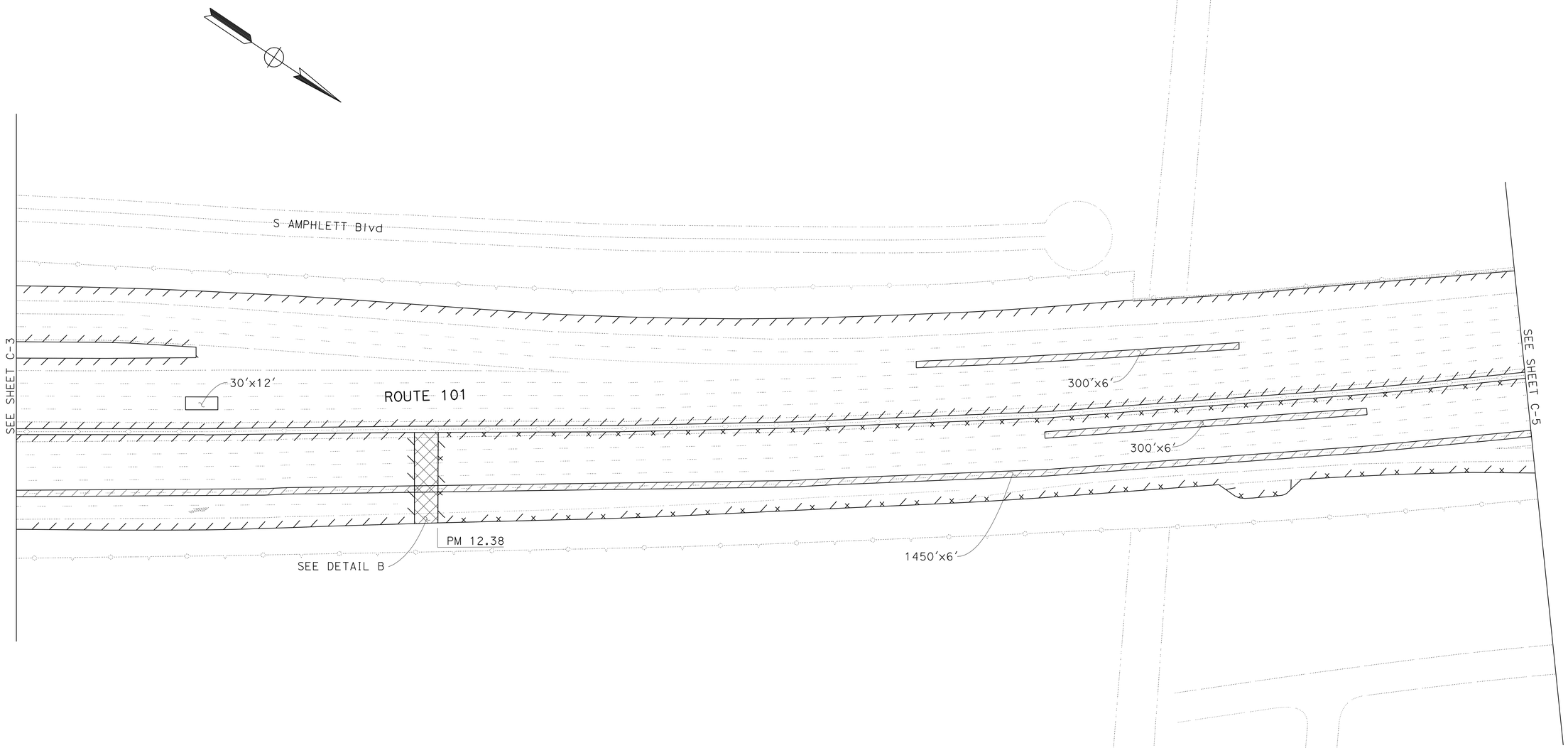

CONSTRUCTION DETAILS
NO SCALE

C-4

FOR ABBREVIATIONS, NOTES AND LEGEND, SEE SHEET C-1

STATE OF CALIFORNIA - DEPARTMENT OF TRANSPORTATION
Caltrans
DESIGN

FUNCTIONAL SUPERVISOR: RONNIE CHUA
CALCULATED-DESIGNED BY: MUSTAQUR RAHMAN
CHECKED BY: RONNIE CHUA
REVISED BY
DATE REVISED

LAST REVISION 12-14-11
DATE PLOTTED => 01-FEB-2012
TIME PLOTTED => 09:10

Dist	COUNTY	ROUTE	POST MILES TOTAL PROJECT	SHEET No.	TOTAL SHEETS
04	SM	101	12.0/13.5	8	56

REGISTERED CIVIL ENGINEER 1-10-12 DATE

1-23-12
PLANS APPROVAL DATE

REGISTERED PROFESSIONAL ENGINEER
Md Mustaqur Rahman
No. 75824
Exp. 6-30-12
CIVIL
STATE OF CALIFORNIA

THE STATE OF CALIFORNIA OR ITS OFFICERS OR AGENTS SHALL NOT BE RESPONSIBLE FOR THE ACCURACY OR COMPLETENESS OF SCANNED COPIES OF THIS PLAN SHEET.

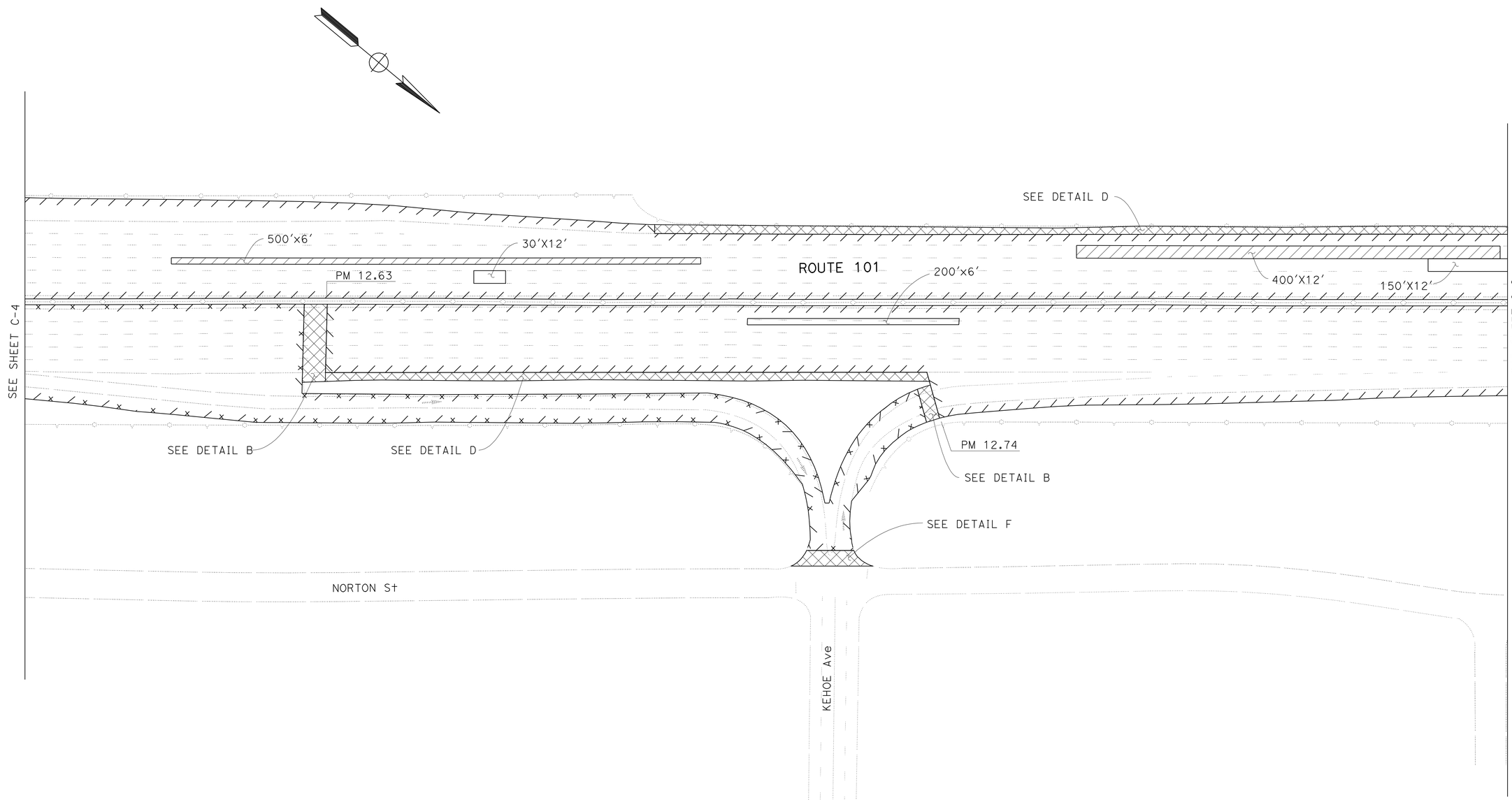

FOR ABBREVIATIONS, NOTES AND LEGEND, SEE SHEET C-1

CONSTRUCTION DETAILS

NO SCALE

C-5

STATE OF CALIFORNIA - DEPARTMENT OF TRANSPORTATION
Caltrans
DESIGN

FUNCTIONAL SUPERVISOR: RONNIE CHUA
CALCULATED-DESIGNED BY: MUSTAQUR RAHMAN
CHECKED BY: RONNIE CHUA
REVISED BY
DATE REVISED

LAST REVISION 01-09-12
DATE PLOTTED => 01-FEB-2012
TIME PLOTTED => 09:10

Dist	COUNTY	ROUTE	POST MILES TOTAL PROJECT	SHEET No.	TOTAL SHEETS
04	SM	101	12.0/13.5	9	56

REGISTERED CIVIL ENGINEER 1-10-12 DATE

1-23-12
PLANS APPROVAL DATE

REGISTERED PROFESSIONAL ENGINEER
Md Mustaqur Rahman
No. 75824
Exp. 6-30-12
CIVIL
STATE OF CALIFORNIA

THE STATE OF CALIFORNIA OR ITS OFFICERS OR AGENTS SHALL NOT BE RESPONSIBLE FOR THE ACCURACY OR COMPLETENESS OF SCANNED COPIES OF THIS PLAN SHEET.

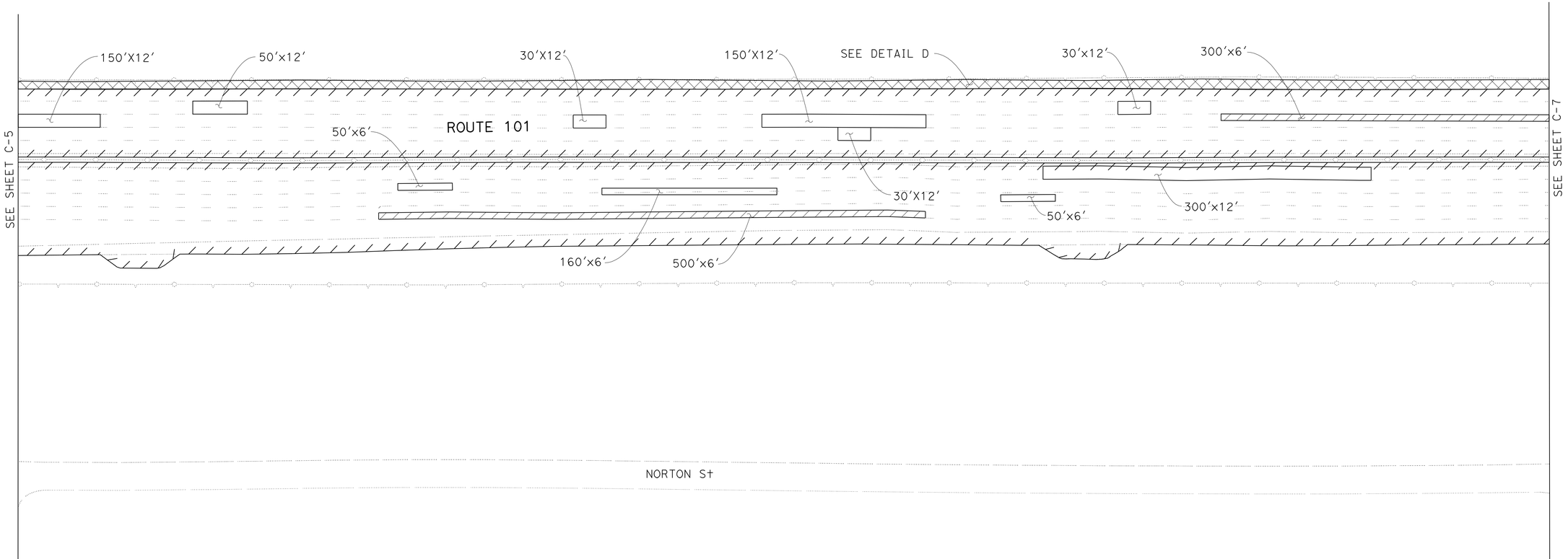

CONSTRUCTION DETAILS

NO SCALE

FOR ABBREVIATIONS, NOTES AND LEGEND, SEE SHEET C-1

C-6

REVISED BY | DATE REVISED

MUSTAQUR RAHMAN | RONNIE CHUA

CALCULATED-DESIGNED BY | CHECKED BY

FUNCTIONAL SUPERVISOR: RONNIE CHUA

STATE OF CALIFORNIA - DEPARTMENT OF TRANSPORTATION

Caltrans® DESIGN

LAST REVISION | DATE PLOTTED => 01-FEB-2012
12-14-11 | TIME PLOTTED => 09:10

Dist	COUNTY	ROUTE	POST MILES TOTAL PROJECT	SHEET No.	TOTAL SHEETS
04	SM	101	12.0/13.5	10	56

REGISTERED CIVIL ENGINEER 1-10-12 DATE

1-23-12
PLANS APPROVAL DATE

REGISTERED PROFESSIONAL ENGINEER
Md Mustaqur Rahman
No. 75824
Exp. 6-30-12
CIVIL
STATE OF CALIFORNIA

THE STATE OF CALIFORNIA OR ITS OFFICERS OR AGENTS SHALL NOT BE RESPONSIBLE FOR THE ACCURACY OR COMPLETENESS OF SCANNED COPIES OF THIS PLAN SHEET.

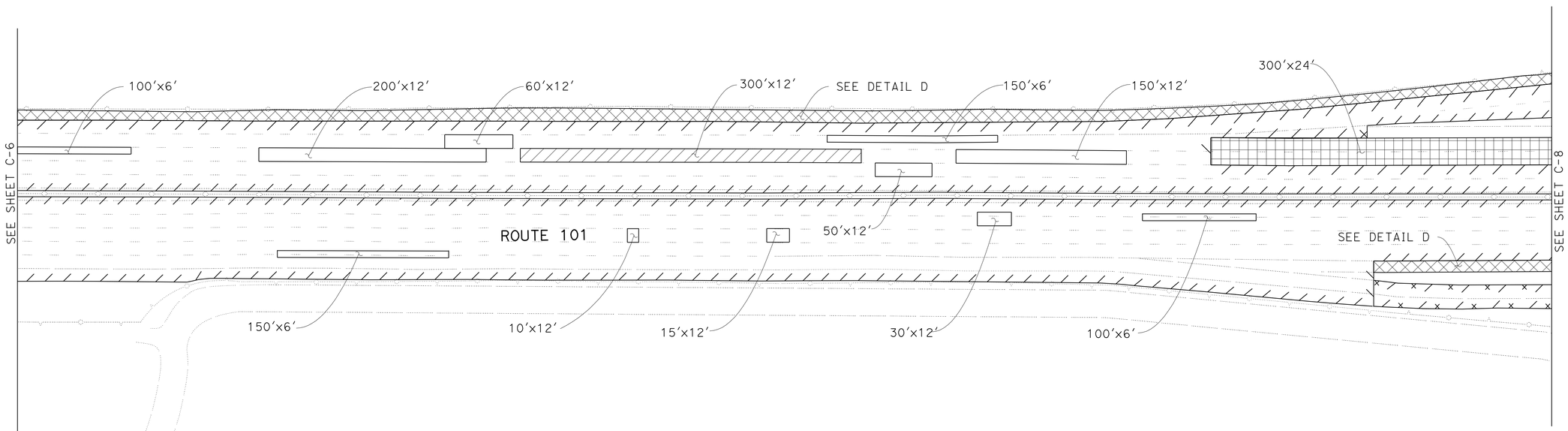

CONSTRUCTION DETAILS

NO SCALE

FOR ABBREVIATIONS, NOTES AND LEGEND, SEE SHEET C-1

C-7

STATE OF CALIFORNIA - DEPARTMENT OF TRANSPORTATION
Caltrans
DESIGN

FUNCTIONAL SUPERVISOR: RONNIE CHUA
CALCULATED-DESIGNED BY: MUSTAQUR RAHMAN
CHECKED BY: RONNIE CHUA
REVISED BY
DATE REVISED

LAST REVISION DATE PLOTTED => 01-FEB-2012
12-14-11 TIME PLOTTED => 09:10

Dist	COUNTY	ROUTE	POST MILES TOTAL PROJECT	SHEET No.	TOTAL SHEETS
04	SM	101	12.0/13.5	11	56

REGISTERED CIVIL ENGINEER 1-10-12 DATE

1-23-12
PLANS APPROVAL DATE

REGISTERED PROFESSIONAL ENGINEER Md Mustaqur Rahman No. 75824 Exp. 6-30-12 CIVIL STATE OF CALIFORNIA

THE STATE OF CALIFORNIA OR ITS OFFICERS OR AGENTS SHALL NOT BE RESPONSIBLE FOR THE ACCURACY OR COMPLETENESS OF SCANNED COPIES OF THIS PLAN SHEET.

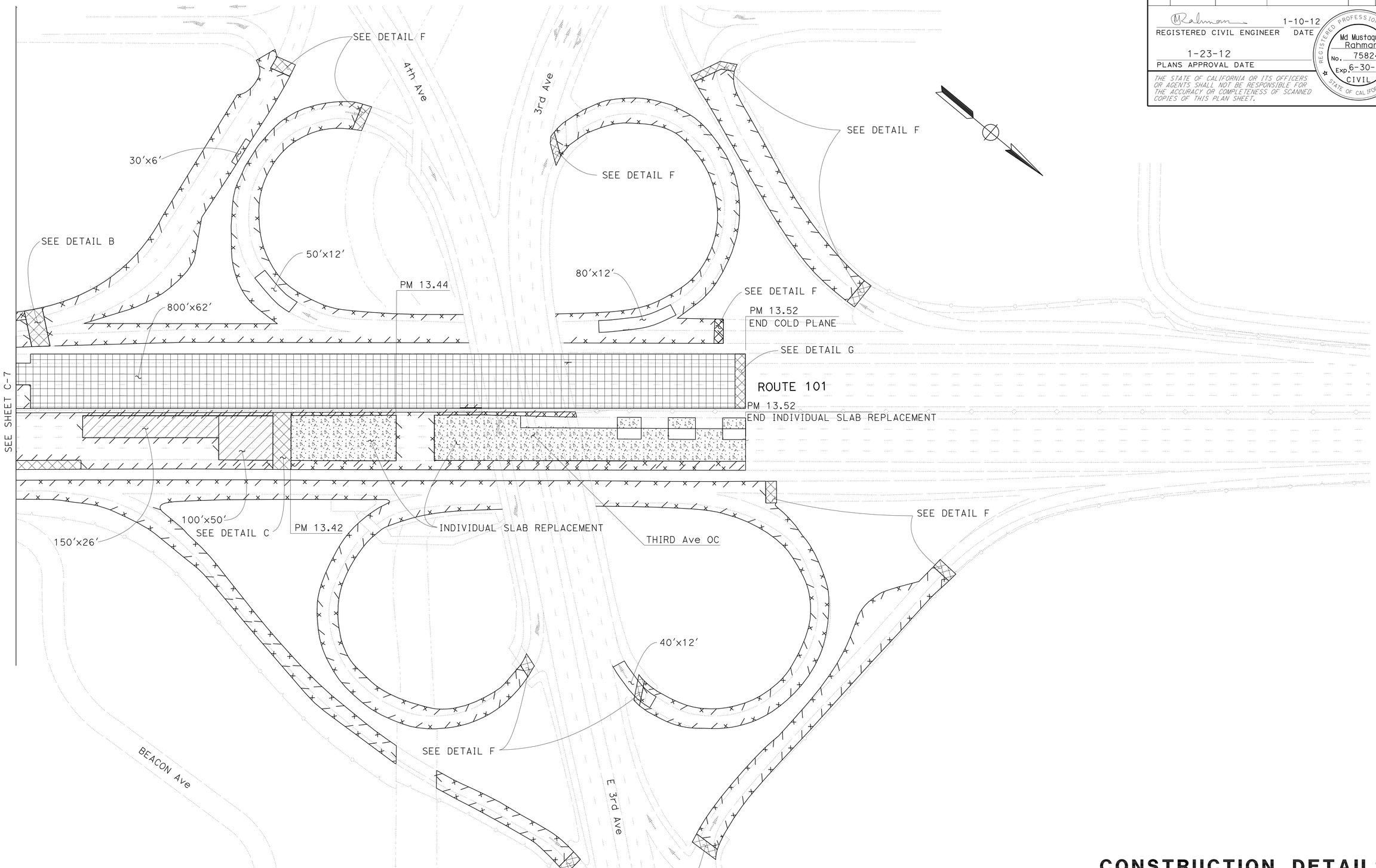

FOR ABBREVIATIONS, NOTES AND LEGEND, SEE SHEET C-1

CONSTRUCTION DETAILS

NO SCALE

C-8

STATE OF CALIFORNIA - DEPARTMENT OF TRANSPORTATION

Caltrans® DESIGN

FUNCTIONAL SUPERVISOR: RONNIE CHUA

CHECKED BY: RONNIE CHUA

CALCULATED-DESIGNED BY: MUSTAQUR RAHMAN

REVISED BY / DATE REVISED

LAST REVISION 01-20-12 | DATE PLOTTED => 01-FEB-2012 | TIME PLOTTED => 09:10

Dist	COUNTY	ROUTE	POST MILES TOTAL PROJECT	SHEET No.	TOTAL SHEETS
04	SM	101	12.0/13.5	12	56

REGISTERED CIVIL ENGINEER 1-10-12 DATE

1-23-12
PLANS APPROVAL DATE

REGISTERED PROFESSIONAL ENGINEER Md Mustaqur Rahman No. 75824 Exp. 6-30-12 CIVIL STATE OF CALIFORNIA

THE STATE OF CALIFORNIA OR ITS OFFICERS OR AGENTS SHALL NOT BE RESPONSIBLE FOR THE ACCURACY OR COMPLETENESS OF SCANNED COPIES OF THIS PLAN SHEET.

ABBREVIATION:

BWC-G BONDED WEARING CO OR SE-GAP GRADED

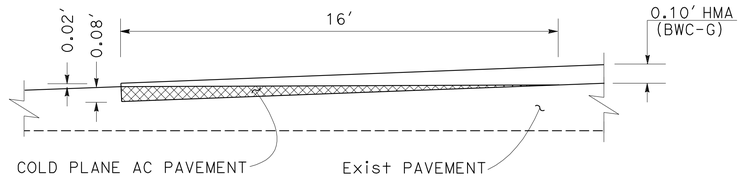

DETAIL A

CONFORM AT THE BEGINNING, END, RAMP AND CITY STREETS (FOR OVERLAY LOCATIONS ONLY)

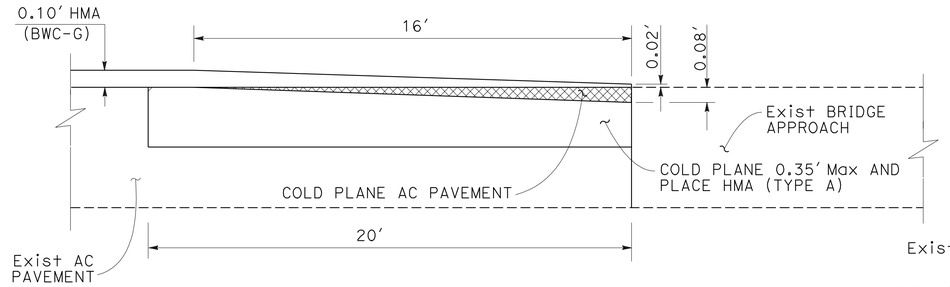

DETAIL E

PAVING CONFORM AT SB OFF-RAMP TO WB 92

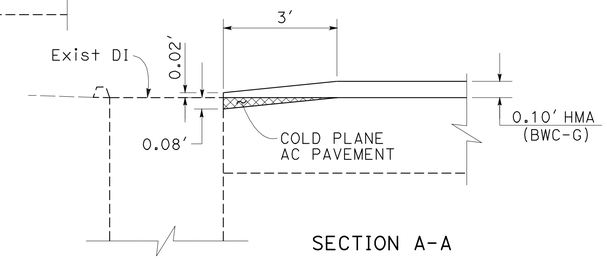

SECTION A-A

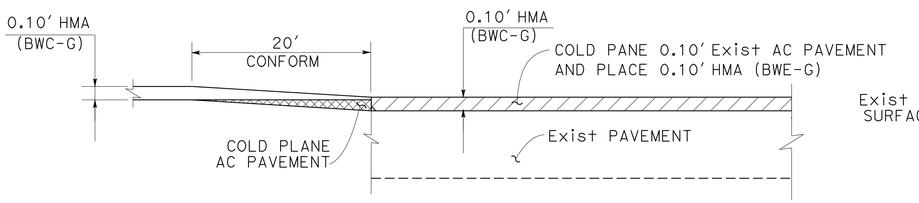

DETAIL B

PAVING CONFORM FOR OVERLAY AND COLD PLANE Exist AC PAVEMENT

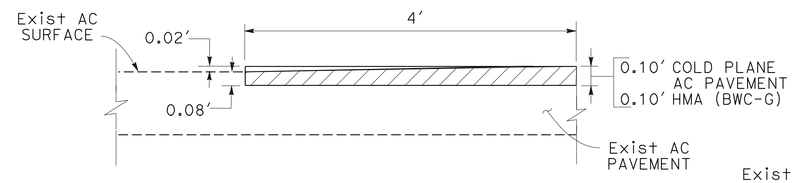

DETAIL F

PAVING CONFORM AT BEGINNING AND END OF RAMP AND AT CITY STREET (FOR COLD PLANE AND OVERLAY LOCATIONS ONLY)

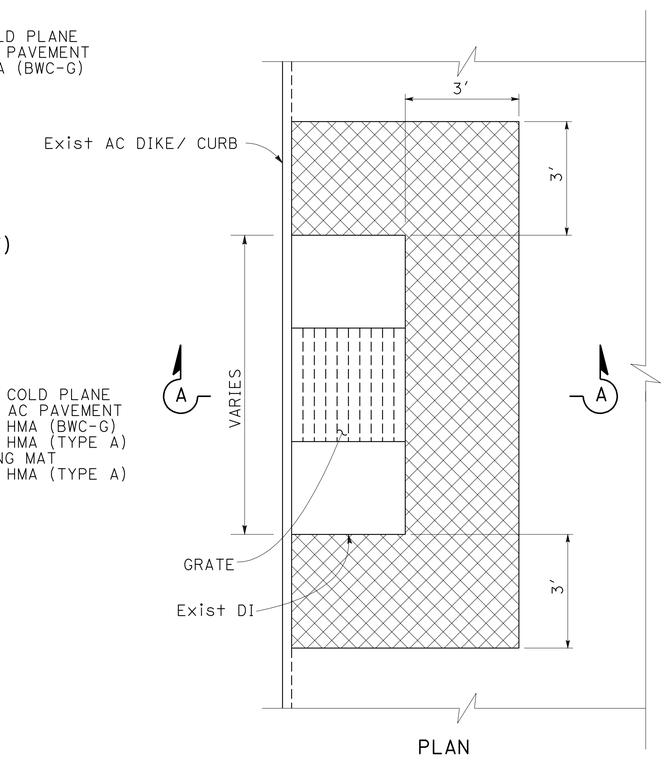

PLAN

TYPICAL

PAVING CONFORM Exist DI

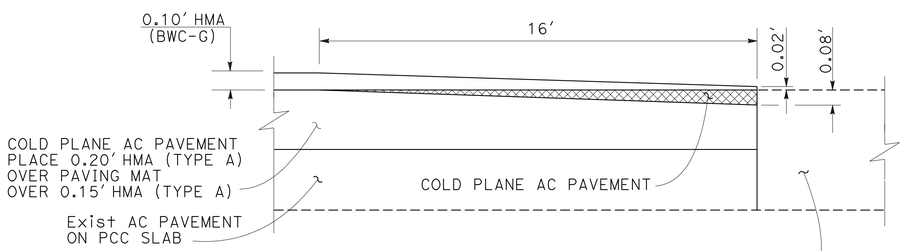

DETAIL C

PAVING CONFORM AT Exist PCC SLAB

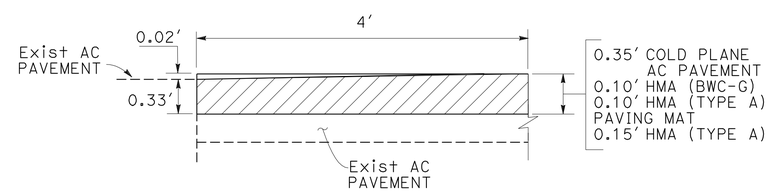

DETAIL G

CONFORM AT THE END OF PROJECT ON SB MAINLINE

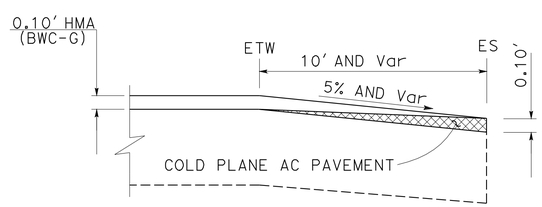

DETAIL D

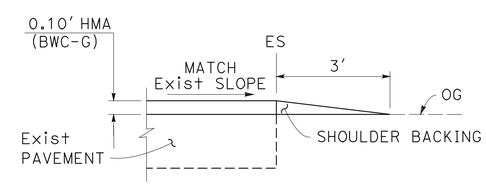

TYPICAL

SHOULDER BACKING

CONSTRUCTION DETAILS

NO SCALE

C-9

STATE OF CALIFORNIA - DEPARTMENT OF TRANSPORTATION
Caltrans® DESIGN

FUNCTIONAL SUPERVISOR: RONNIE CHUA
CALCULATED-DESIGNED BY: MUSTAQUR RAHMAN
CHECKED BY: RONNIE CHUA
REVISED BY
DATE REVISED

LAST REVISION 01-20-12
DATE PLOTTED => 01-FEB-2012
TIME PLOTTED => 09:10

Dist	COUNTY	ROUTE	POST MILES TOTAL PROJECT	SHEET No.	TOTAL SHEETS
04	SM	101	12.0/13.5	13	56

REGISTERED CIVIL ENGINEER 1-10-12 DATE

1-23-12
PLANS APPROVAL DATE

REGISTERED PROFESSIONAL ENGINEER Jerilyn L. Struven No. 49964 Exp. 12-31-12 CIVIL STATE OF CALIFORNIA

THE STATE OF CALIFORNIA OR ITS OFFICERS OR AGENTS SHALL NOT BE RESPONSIBLE FOR THE ACCURACY OR COMPLETENESS OF SCANNED COPIES OF THIS PLAN SHEET.

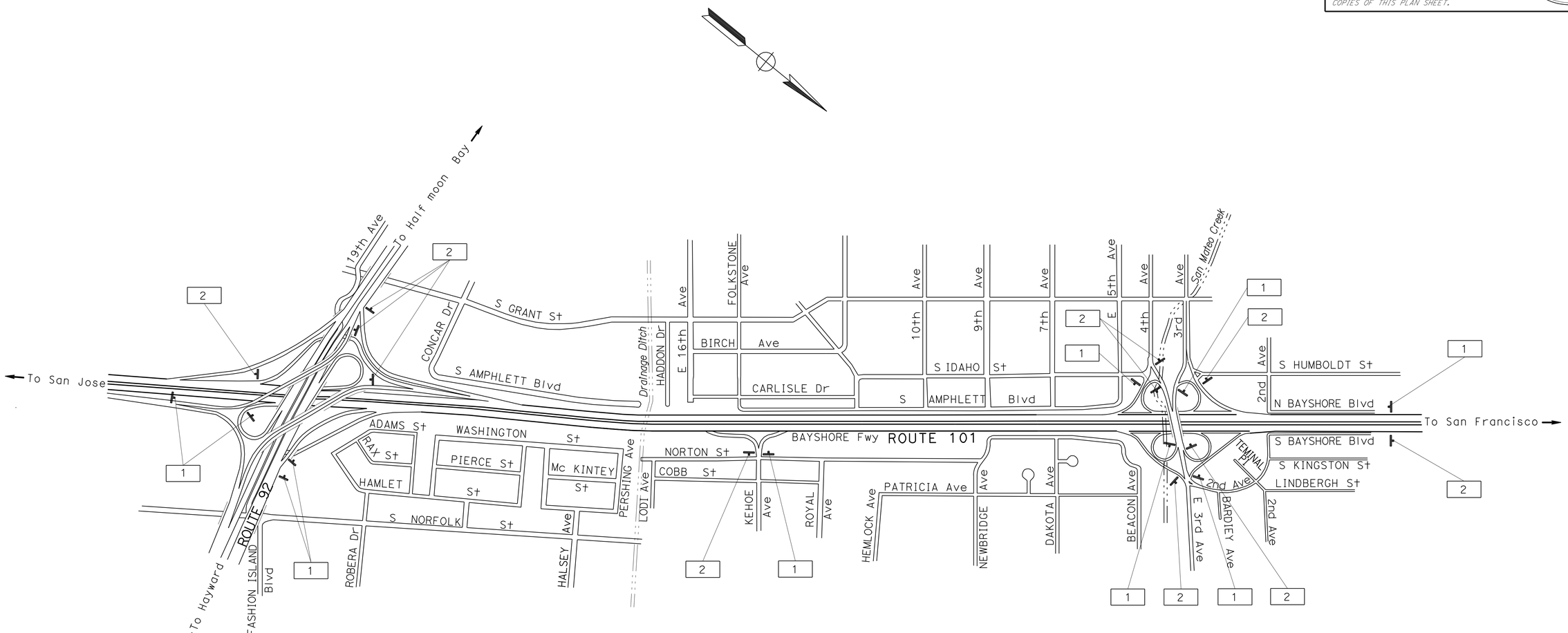

NOTES:

1. EXACT LOCATION AND POSITION OF SIGN TO BE DETERMINED BY THE ENGINEER.
2. DIMENSIONS FOR SIGN PANEL, LETTERING AND POST ARE IN INCHES.

LEGEND:

No.	SIGN INSTALLATION NUMBER
→	DIRECTION OF TRAFFIC
X	RAMP OR CONNECTOR TO BE CLOSED

CONSTRUCTION AREA SIGNS

NO SCALE

APPROVED FOR CONSTRUCTION AREA SIGN WORK ONLY

CS-1

STATE OF CALIFORNIA - DEPARTMENT OF TRANSPORTATION
Caltrans® TRAFFIC

FUNCTIONAL SUPERVISOR: ROLAND AU-YEUNG
CALCULATED-DESIGNED BY: STEPHEN LAU
CHECKED BY: JERILYN STRUVEN
REVISED BY
DATE REVISED

LAST REVISION 12-14-11
DATE PLOTTED => 01-FEB-2012
TIME PLOTTED => 09:10

Dist	COUNTY	ROUTE	POST MILES TOTAL PROJECT	SHEET No.	TOTAL SHEETS
04	SM	101	12.0/13.5	14	56

REGISTERED CIVIL ENGINEER 1-10-12 DATE

1-23-12
PLANS APPROVAL DATE

REGISTERED PROFESSIONAL ENGINEER Jerilyn L. Struven No. 49964 Exp. 12-31-12 CIVIL STATE OF CALIFORNIA

THE STATE OF CALIFORNIA OR ITS OFFICERS OR AGENTS SHALL NOT BE RESPONSIBLE FOR THE ACCURACY OR COMPLETENESS OF SCANNED COPIES OF THIS PLAN SHEET.

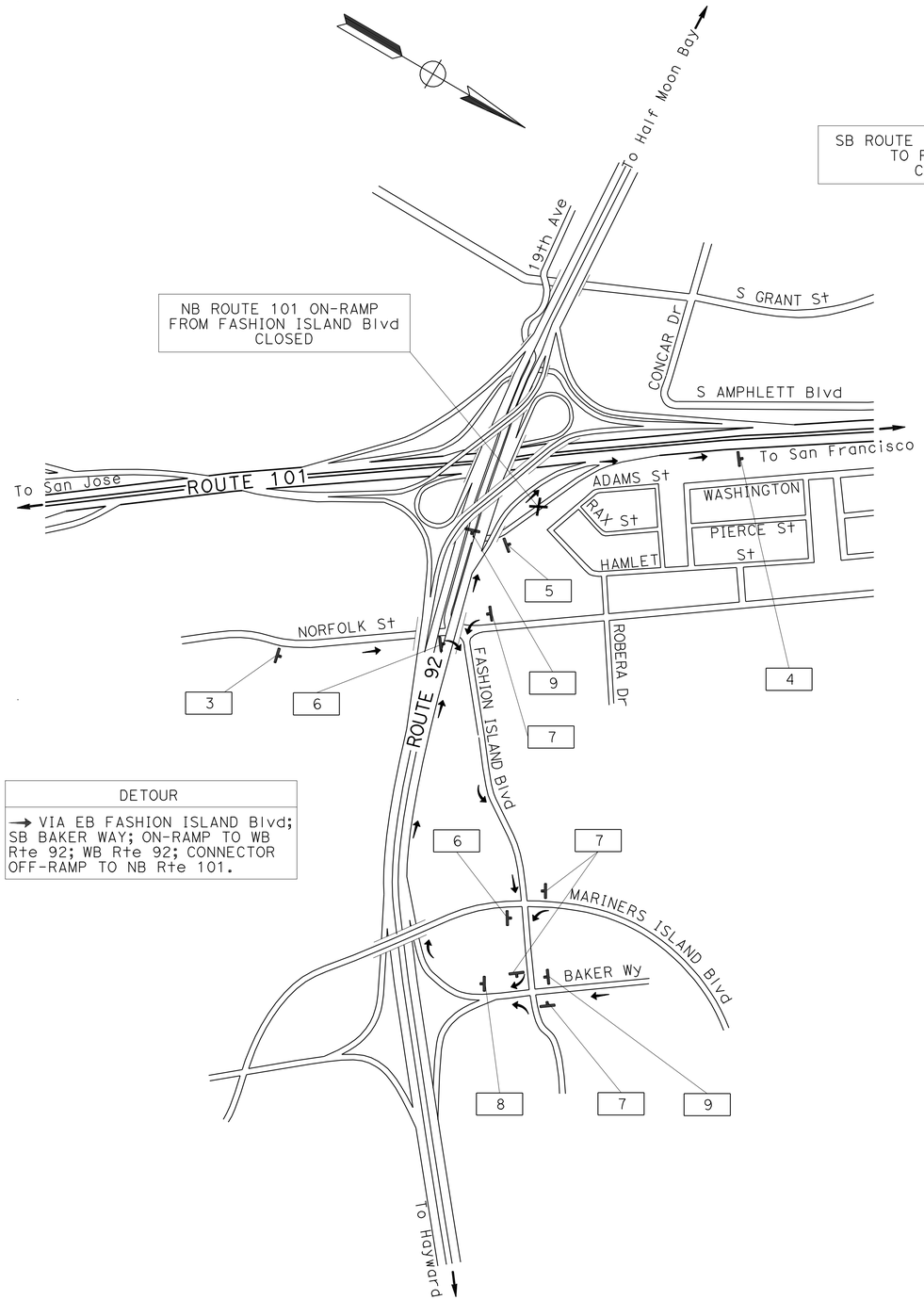

DETOUR

→ VIA EB FASHION ISLAND Blvd; SB BAKER WAY; ON-RAMP TO WB Rte 92; WB Rte 92; CONNECTOR OFF-RAMP TO NB Rte 101.

DETOUR PLAN #1
NB ROUTE 101 ON-RAMP FROM FASHION ISLAND Blvd CLOSURE

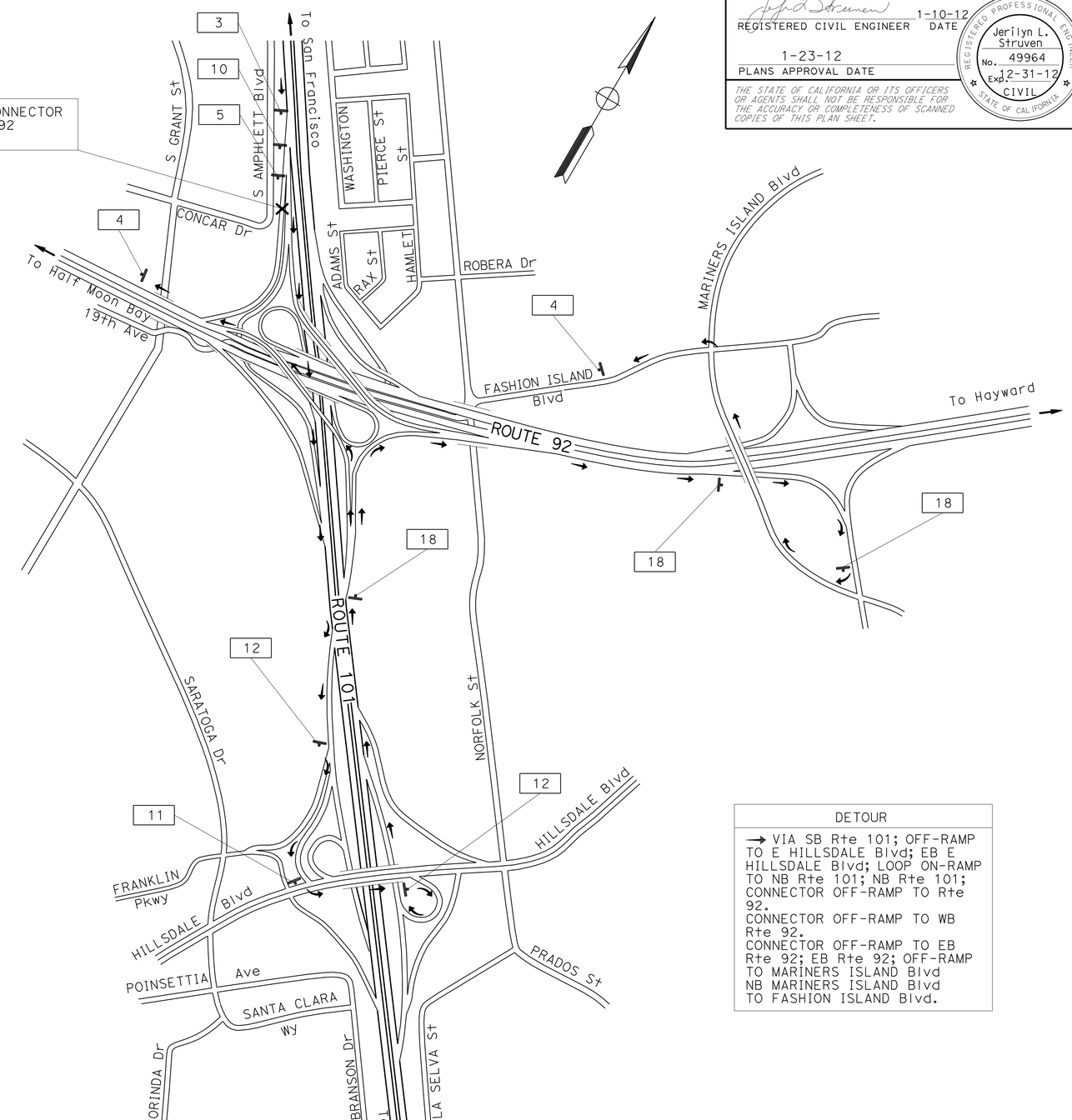

DETOUR

→ VIA SB Rte 101; OFF-RAMP TO E HILLSDALE Blvd; EB E HILLSDALE Blvd; LOOP ON-RAMP TO NB Rte 101; NB Rte 101; CONNECTOR OFF-RAMP TO Rte 92.
CONNECTOR OFF-RAMP TO WB Rte 92.
CONNECTOR OFF-RAMP TO EB Rte 92; EB Rte 92; OFF-RAMP TO MARINERS ISLAND Blvd NB MARINERS ISLAND Blvd TO FASHION ISLAND Blvd.

DETOUR PLAN #2
SB ROUTE 101 CONNECTOR TO ROUTE 92 CLOSURE

APPROVED FOR CONSTRUCTION AREA SIGN WORK ONLY

FOR NOTES AND LEGEND, SEE SHEET CS-1

CONSTRUCTION AREA SIGNS
NO SCALE

CS-2

STATE OF CALIFORNIA - DEPARTMENT OF TRANSPORTATION
Caltrans
TRAFFIC

FUNCTIONAL SUPERVISOR: ROLAND AU-YEUNG
CALCULATED-DESIGNED BY: STEPHEN LAU
CHECKED BY: JERILYN STRUVEN
REVISED BY
DATE REVISED

LAST REVISION 12-14-11
DATE PLOTTED => 01-FEB-2012
TIME PLOTTED => 09:10

Dist	COUNTY	ROUTE	POST MILES TOTAL PROJECT	SHEET No.	TOTAL SHEETS
04	SM	101	12.0/13.5	15	56

REGISTERED CIVIL ENGINEER 1-10-12 DATE

1-23-12
PLANS APPROVAL DATE

REGISTERED PROFESSIONAL ENGINEER Jerilyn L. Struven No. 49964 Exp. 12-31-12 CIVIL STATE OF CALIFORNIA

THE STATE OF CALIFORNIA OR ITS OFFICERS OR AGENTS SHALL NOT BE RESPONSIBLE FOR THE ACCURACY OR COMPLETENESS OF SCANNED COPIES OF THIS PLAN SHEET.

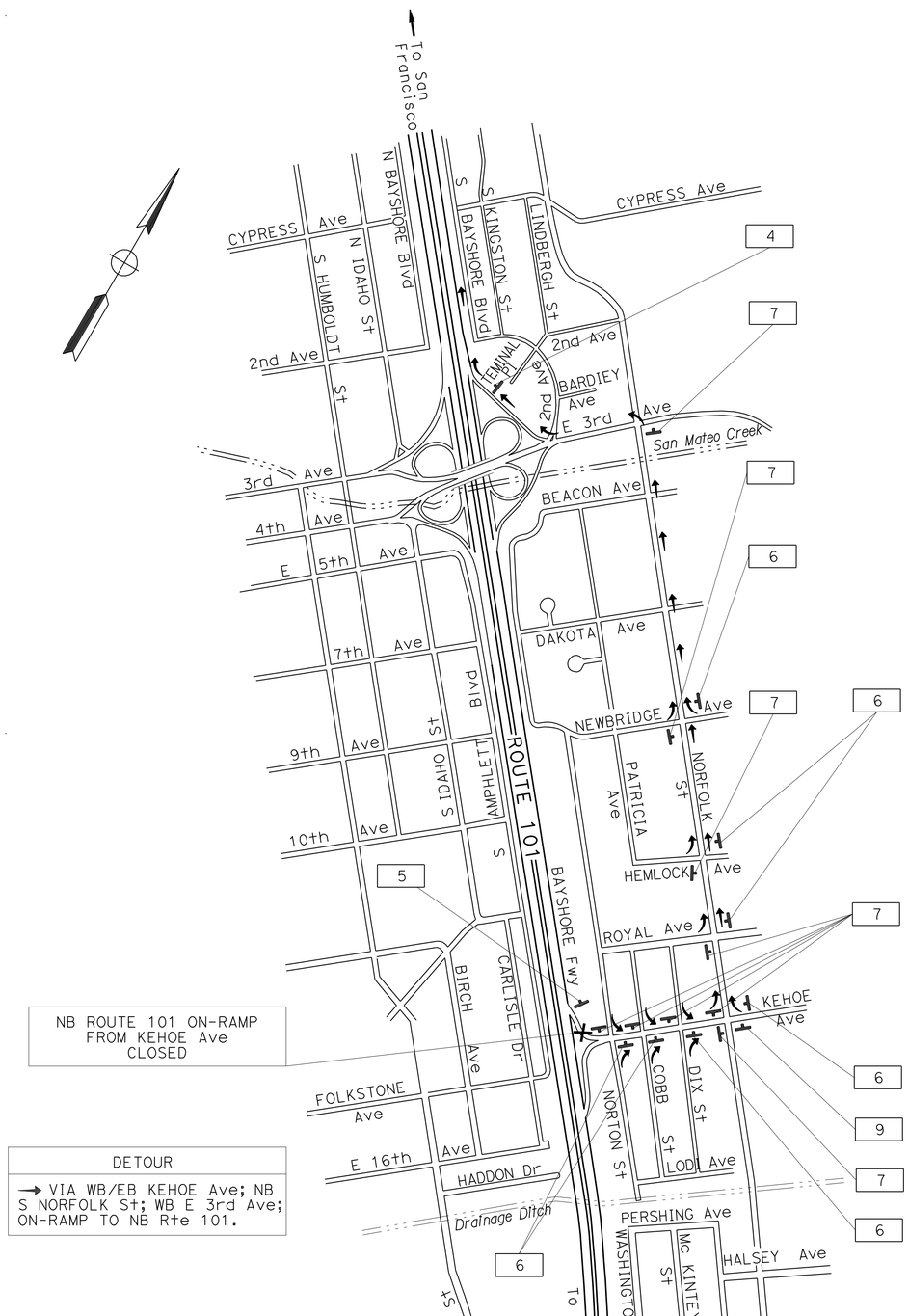

NB ROUTE 101 ON-RAMP FROM KEHOE Ave CLOSED

DETOUR

→ VIA WB/EB KEHOE Ave; NB S NORFOLK St; WB E 3rd Ave; ON-RAMP TO NB Rte 101.

DETOUR PLAN #3

NB ROUTE 101 ON-RAMP FROM KEHOE Ave CLOSURE

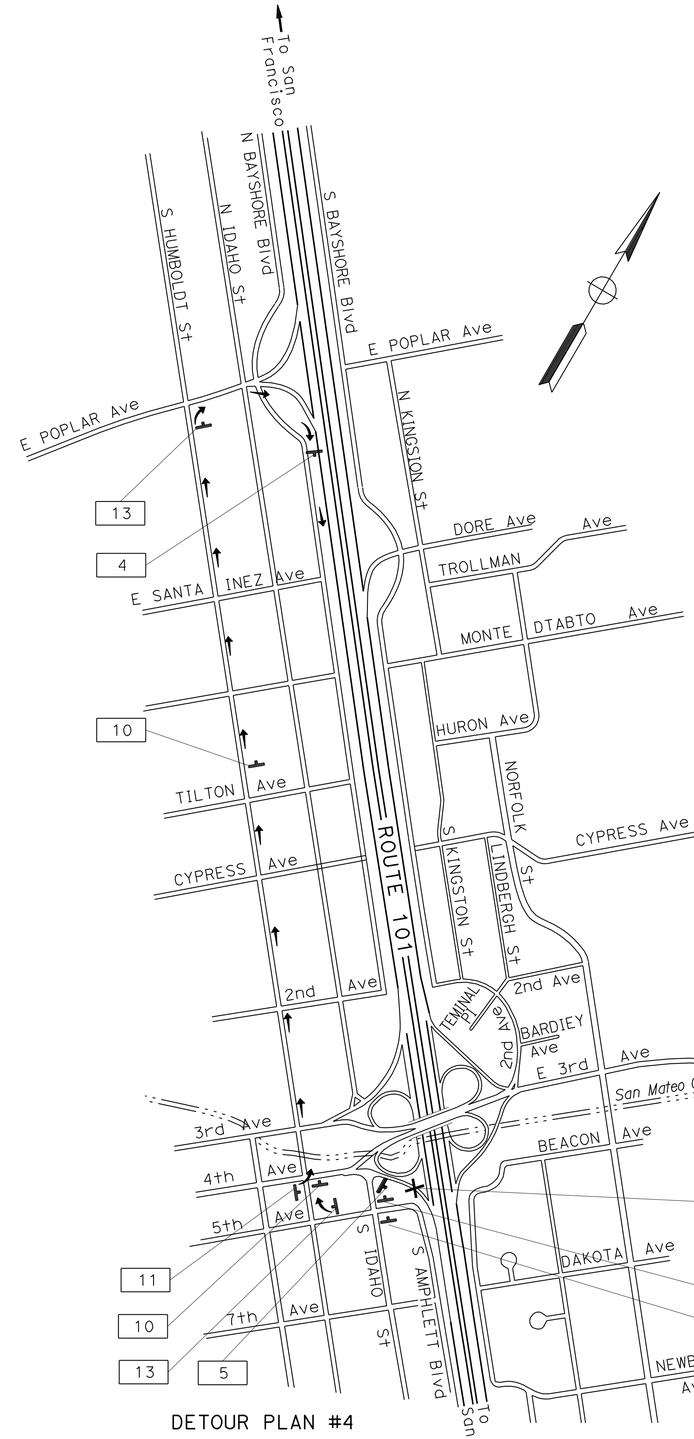

DETOUR

→ VIA WB E 3rd Ave; NB N HUMBOLDT St; EB E POPLAR Ave TO SB Rte 101 ON-RAMP.

SB ROUTE 101 ON-RAMP FROM EB E 4th Ave/WB E 3rd Ave CLOSED

DETOUR PLAN #4

SB ROUTE 101 ON-RAMP FROM EB E 4th Ave/WB E 3rd Ave CLOSURE

CONSTRUCTION AREA SIGNS

NO SCALE

APPROVED FOR CONSTRUCTION AREA SIGN WORK ONLY

FOR NOTES AND LEGEND, SEE SHEET CS-1

CS-3

STATE OF CALIFORNIA - DEPARTMENT OF TRANSPORTATION
Caltrans
TRAFFIC

FUNCTIONAL SUPERVISOR: ROLAND AU-YEUNG
CALCULATED-DESIGNED BY: STEPHEN LAU
CHECKED BY: JERILYN STRUVEN
REVISED BY
DATE REVISED

LAST REVISION 12-14-11
DATE PLOTTED => 01-FEB-2012
TIME PLOTTED => 09:10

Dist	COUNTY	ROUTE	POST MILES TOTAL PROJECT	SHEET No.	TOTAL SHEETS
04	SM	101	12.0/13.5	16	56

REGISTERED CIVIL ENGINEER 1-10-12 DATE

1-23-12
PLANS APPROVAL DATE

REGISTERED PROFESSIONAL ENGINEER Jerilyn L. Struven No. 49964 Exp. 12-31-12 CIVIL STATE OF CALIFORNIA

THE STATE OF CALIFORNIA OR ITS OFFICERS OR AGENTS SHALL NOT BE RESPONSIBLE FOR THE ACCURACY OR COMPLETENESS OF SCANNED COPIES OF THIS PLAN SHEET.

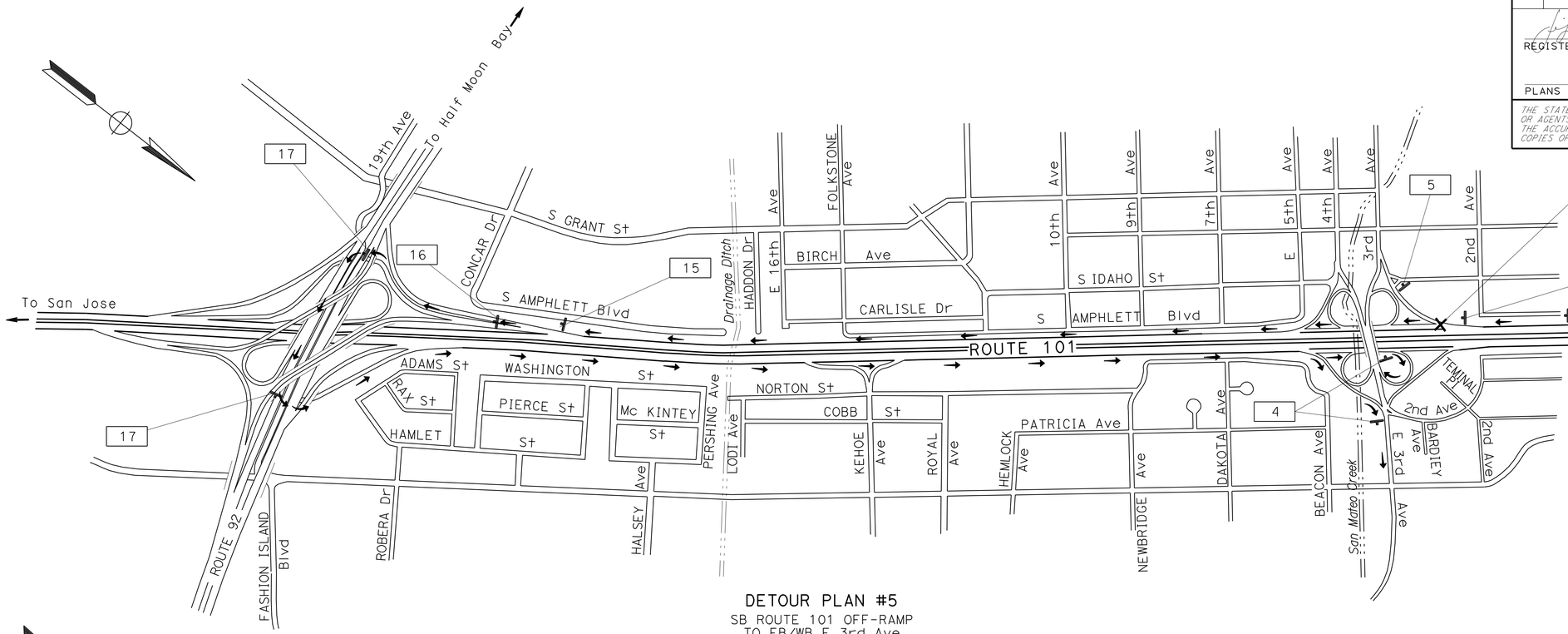

SB ROUTE 101 OFF-RAMP TO EB/WB E 3rd Ave CLOSED

DETOUR

→ VIA SB Rte 101 ; OFF-RAMP TO Rte 92 CONNECTORS/ FASHION ISLAND Blvd; FASHION ISLAND Blvd OFF-RAMP; EB FASHION ISLAND Blvd; ON-RAMP TO NB Rte 101; NB Rte 101; OFF-RAMP TO EB/WB E 3rd Ave.

DETOUR PLAN #5

SB ROUTE 101 OFF-RAMP TO EB/WB E 3rd Ave CLOSURE

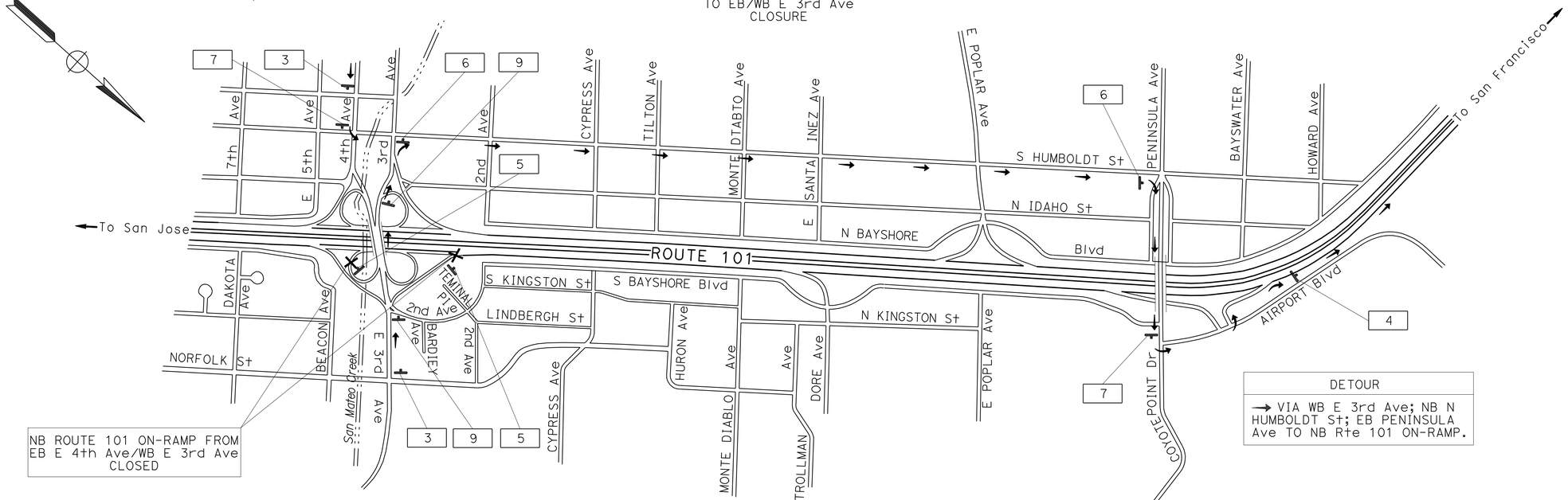

NB ROUTE 101 ON-RAMP FROM EB E 4th Ave/WB E 3rd Ave CLOSED

DETOUR

→ VIA WB E 3rd Ave; NB N HUMBOLDT St; EB PENINSULA Ave TO NB Rte 101 ON-RAMP.

DETOUR PLAN #6

NB ROUTE 101 ON-RAMP FROM EB 4th Ave/WB E 3rd Ave CLOSURE

APPROVED FOR CONSTRUCTION AREA SIGN WORK ONLY

FOR NOTES AND LEGEND, SEE SHEET CS-1

CONSTRUCTION AREA SIGNS

NO SCALE

CS-4

STATE OF CALIFORNIA - DEPARTMENT OF TRANSPORTATION
Caltrans®
TRAFFIC

FUNCTIONAL SUPERVISOR: ROLAND AU-YEUNG
CALCULATED-DESIGNED BY: STEPHEN LAU
CHECKED BY: JERILYN STRUVEN
REVISED BY
DATE REVISED

LAST REVISION 12-14-11
DATE PLOTTED => 01-FEB-2012
TIME PLOTTED => 09:10

Dist	COUNTY	ROUTE	POST MILES TOTAL PROJECT	SHEET No.	TOTAL SHEETS
04	SM	101	12.0/13.5	17	56

REGISTERED CIVIL ENGINEER 1-10-12 DATE

1-23-12
PLANS APPROVAL DATE

REGISTERED PROFESSIONAL ENGINEER Jerilyn L. Struven No. 49964 Exp. 12-31-12 CIVIL STATE OF CALIFORNIA

THE STATE OF CALIFORNIA OR ITS OFFICERS OR AGENTS SHALL NOT BE RESPONSIBLE FOR THE ACCURACY OR COMPLETENESS OF SCANNED COPIES OF THIS PLAN SHEET.

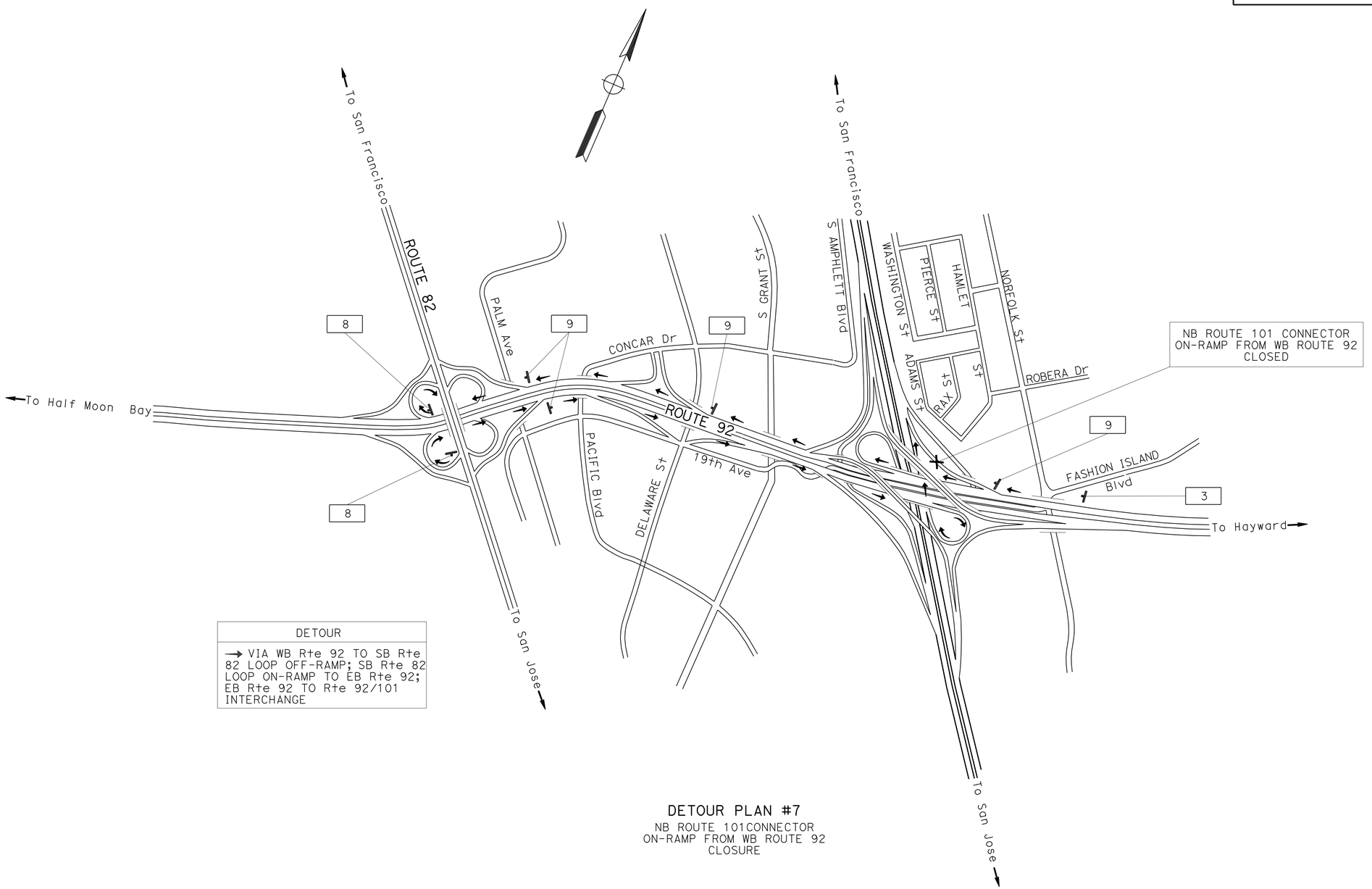

DETOUR
→ VIA WB Rte 92 TO SB Rte 82 LOOP OFF-RAMP; SB Rte 82 LOOP ON-RAMP TO EB Rte 92; EB Rte 92 TO Rte 92/101 INTERCHANGE

DETOUR PLAN #7
NB ROUTE 101CONNECTOR ON-RAMP FROM WB ROUTE 92 CLOSURE

CONSTRUCTION AREA SIGNS

NO SCALE

APPROVED FOR CONSTRUCTION AREA SIGN WORK ONLY

FOR NOTES AND LEGEND, SEE SHEET CS-1

CS-5

STATE OF CALIFORNIA - DEPARTMENT OF TRANSPORTATION
Caltrans
TRAFFIC

FUNCTIONAL SUPERVISOR: ROLAND AU-YEUNG
CALCULATED-DESIGNED BY: STEPHEN LAU
CHECKED BY: JERILYN STRUVEN
REVISED BY
DATE REVISED

LAST REVISION 12-14-11
DATE PLOTTED => 01-FEB-2012
TIME PLOTTED => 09:10

Dist	COUNTY	ROUTE	POST MILES TOTAL PROJECT	SHEET No.	TOTAL SHEETS
04	SM	101	12.0/13.5	18	56

REGISTERED CIVIL ENGINEER 1-10-12 DATE

1-23-12
PLANS APPROVAL DATE

REGISTERED PROFESSIONAL ENGINEER Jerilyn L. Struven No. 49964 Exp. 12-31-12 CIVIL STATE OF CALIFORNIA

THE STATE OF CALIFORNIA OR ITS OFFICERS OR AGENTS SHALL NOT BE RESPONSIBLE FOR THE ACCURACY OR COMPLETENESS OF SCANNED COPIES OF THIS PLAN SHEET.

CONSTRUCTION AREA SIGNS

SIGN No.	MUTCD CODE	SIGN MESSAGE	PANEL SIZE (INCH X INCH)	No. OF POSTS & SIZE (EA-INCHxINCH)	No. OF SIGNS
1	W20-1	ROAD WORK AHEAD	48 x 48	1-4 x 4	9
2	G20-2	END ROAD WORK	36 x 18	1-4 x 4	8
3	W20-2	DETOUR AHEAD	48 x 48	1-4 x 4	6
4	M4-8A	END DETOUR	30 x 48	1-4 x 4	8
5	SC6-4(CA)	RAMP CLOSED	60 x 48	1-4 x 4	7
6	M4-10(R↑)	DETOUR (RIGHT)	48 x 18	1-4 x 4	11
	M3-1	NORTH	21 x 9		
	G26-2(101)	ROUTE SHIELD	30 x 25		
7	M4-10(L↑)	DETOUR (LEFT)	48 x 18	1-4 x 4	15
	M3-1	NORTH	21 x 9		
	G26-2(101)	ROUTE SHIELD	30 x 25		
8	M3-8	DETOUR	24 x 25	1-4 x 4	3
	M3-1	NORTH	21 x 9		
	G26-2(101)	ROUTE SHIELD	30 x 25		
	M6-2(↗)	DETOUR (DIAGONAL ARROW)	21 x 15		
9	SC3(↑)	DETOUR (STRAIGHT ARROW)	48 x 18	1-4 x 4	9
	M3-1	NORTH	21 x 9		
	G26-2(101)	ROUTE SHIELD	30 x 25		
10	SC3(↑)	DETOUR (STRAIGHT ARROW)	48 x 18	1-4 x 6	4
	M3-3	SOUTH	21 x 9		
	G26-2(101)	ROUTE SHIELD	30 x 25		
	SPEC 2	FASHION ISLAND Blvd	54 x 48		
11	M4-10(L↑)	DETOUR (LEFT)	48 x 18	1-4 x 6	3
	M3-3	SOUTH	21 x 9		
	G26-2(101)	ROUTE SHIELD	30 x 25		
	SPEC 2	FASHION ISLAND Blvd	54 x 48		
12	M3-8	DETOUR	24 x 25	1-4 x 6	2
	M3-3	SOUTH	21 x 9		
	G26-2(101)	ROUTE SHIELD	30 x 25		
	SPEC 2	FASHION ISLAND Blvd	54 x 48		
13	M4-10(R↑)	DETOUR (RIGHT)	48 x 18	1-4 x 4	2
	M3-3	SOUTH	21 x 9		
	G26-2(101)	ROUTE SHIELD	30 x 25		
14	SC3(↑)	DETOUR (STRAIGHT ARROW)	48 x 18	1-4 x 4	1
	SPEC 1	3RD AVE	54 x 18		
15	SPEC 1	3RD AVE	54 x 18	1-4 x 4	1
	M6-2(↗)	DETOUR (DIAGONAL ARROW)	21 x 15		
16	SPEC 1	3RD AVE	54 x 18	1-4 x 4	1
	M6-2(↖)	DETOUR (DIAGONAL ARROW)	21 x 15		
17	M4-10(L↑)	DETOUR (LEFT)	48 x 18	1-4 x 4	2
	SPEC 1	3RD AVE	54 x 18		
18	SPEC 2	FASHION ISLAND Blvd	54 x 48	1-4 x 6	3
	M6-2(↗)	3RD AVE	21 x 15		

3RD AVE — 54 x 18, 6" CAPS
SPECIAL 1

FASHION ISLAND Blvd — 54 x 18, 6" CAPS
SPECIAL 2

APPROVED FOR CONSTRUCTION AREA SIGN WORK ONLY

CONSTRUCTION AREA SIGNS
NO SCALE

CS-6

STATE OF CALIFORNIA - DEPARTMENT OF TRANSPORTATION
Caltrans® TRAFFIC

FUNCTIONAL SUPERVISOR: ROLAND AU-YEUNG
CALCULATED-DESIGNED BY: STEPHEN LAU
CHECKED BY: JERILYN STRUVEN
REVISED BY / DATE REVISED

LAST REVISION 12-14-11 | DATE PLOTTED => 01-FEB-2012 | TIME PLOTTED => 09:10

Dist	COUNTY	ROUTE	POST MILES TOTAL PROJECT	SHEET No.	TOTAL SHEETS
04	SM	101	12.0/13.5	19	56

REGISTERED CIVIL ENGINEER 1-10-12 DATE

1-23-12
PLANS APPROVAL DATE

REGISTERED PROFESSIONAL ENGINEER Md Mustaqur Rahman No. 75824 Exp. 6-30-12 CIVIL STATE OF CALIFORNIA

THE STATE OF CALIFORNIA OR ITS OFFICERS OR AGENTS SHALL NOT BE RESPONSIBLE FOR THE ACCURACY OR COMPLETENESS OF SCANNED COPIES OF THIS PLAN SHEET.

LEGEND:

(No.) PAVEMENT DELINEATION DETAIL

CHANGE OF PAVEMENT DELINEATION DETAILS

NOTES:

1. ALL EXISTING PAVEMENT DELINEATION SHALL BE REFERENCED AND REPLACED IN THE SAME LOCATION AS EXISTING.
2. APPLY 4" WHITE THERMOPLASTIC STRIPE AFTER INSTALLING PAVEMENT MARKERS.

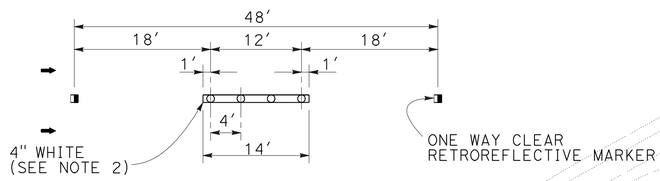

DETAIL 13M

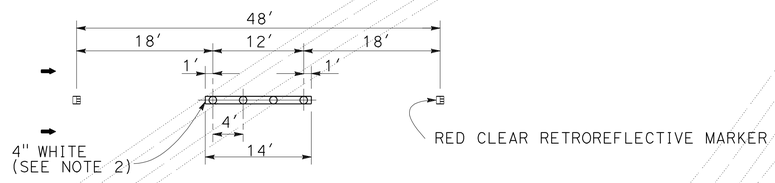

DETAIL 14M

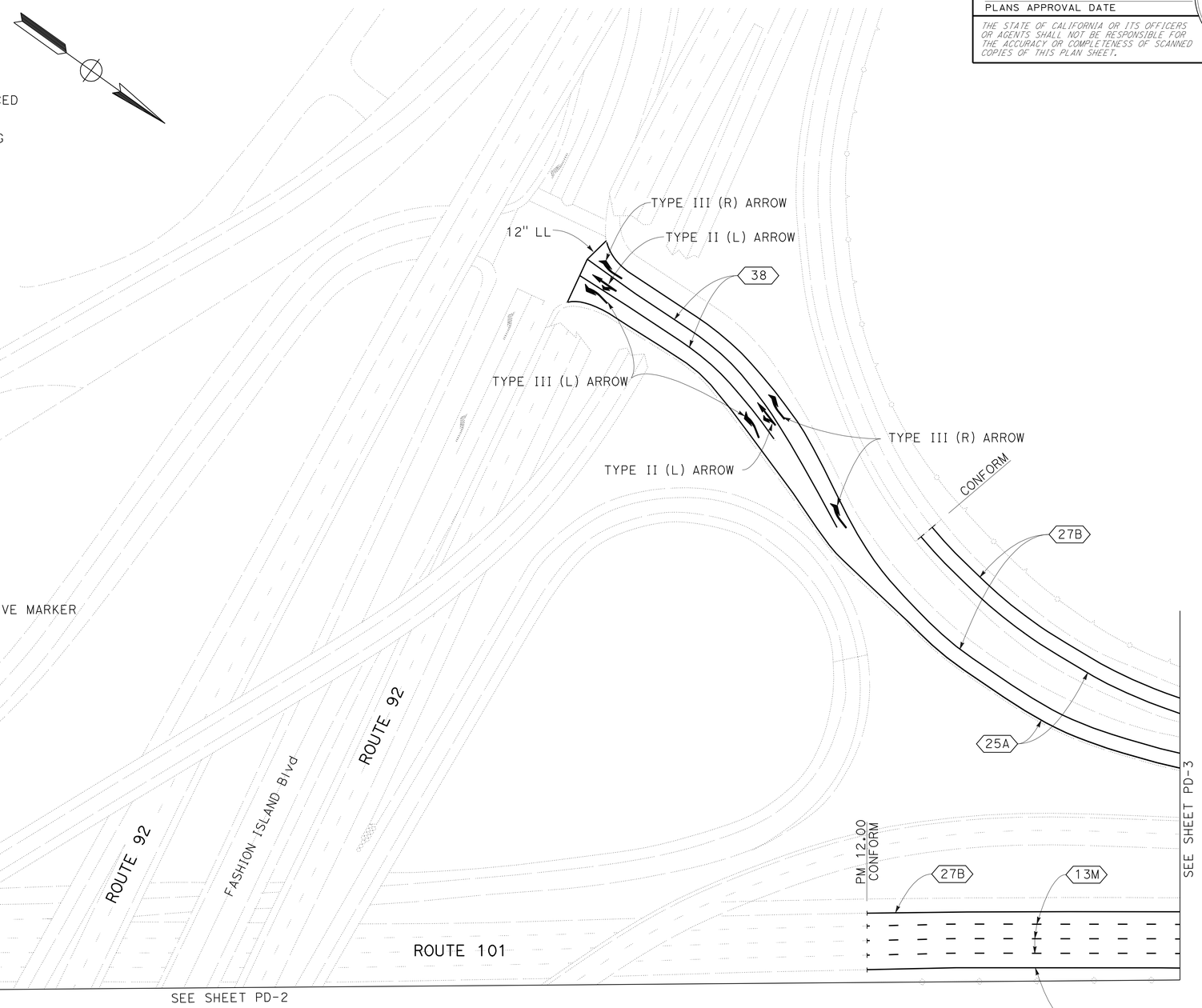

PAVEMENT DELINEATION PLAN

NO SCALE

APPROVED FOR PAVEMENT DELINEATION WORK ONLY

PD-1

REVISED BY | DATE REVISED
MUSTAQUR RAHMAN | RONNIE CHUA
CALCULATED-DESIGNED BY | CHECKED BY
FUNCTIONAL SUPERVISOR | RONNIE CHUA
STATE OF CALIFORNIA - DEPARTMENT OF TRANSPORTATION
Caltrans
DESIGN

LAST REVISION 01-06-12 | DATE PLOTTED => 01-FEB-2012 | TIME PLOTTED => 09:10

Dist	COUNTY	ROUTE	POST MILES TOTAL PROJECT	SHEET No.	TOTAL SHEETS
04	SM	101	12.0/13.5	20	56

REGISTERED CIVIL ENGINEER 1-10-12 DATE

1-23-12
PLANS APPROVAL DATE

REGISTERED PROFESSIONAL ENGINEER
Md Mustaqur Rahman
No. 75824
Exp. 6-30-12
CIVIL
STATE OF CALIFORNIA

THE STATE OF CALIFORNIA OR ITS OFFICERS OR AGENTS SHALL NOT BE RESPONSIBLE FOR THE ACCURACY OR COMPLETENESS OF SCANNED COPIES OF THIS PLAN SHEET.

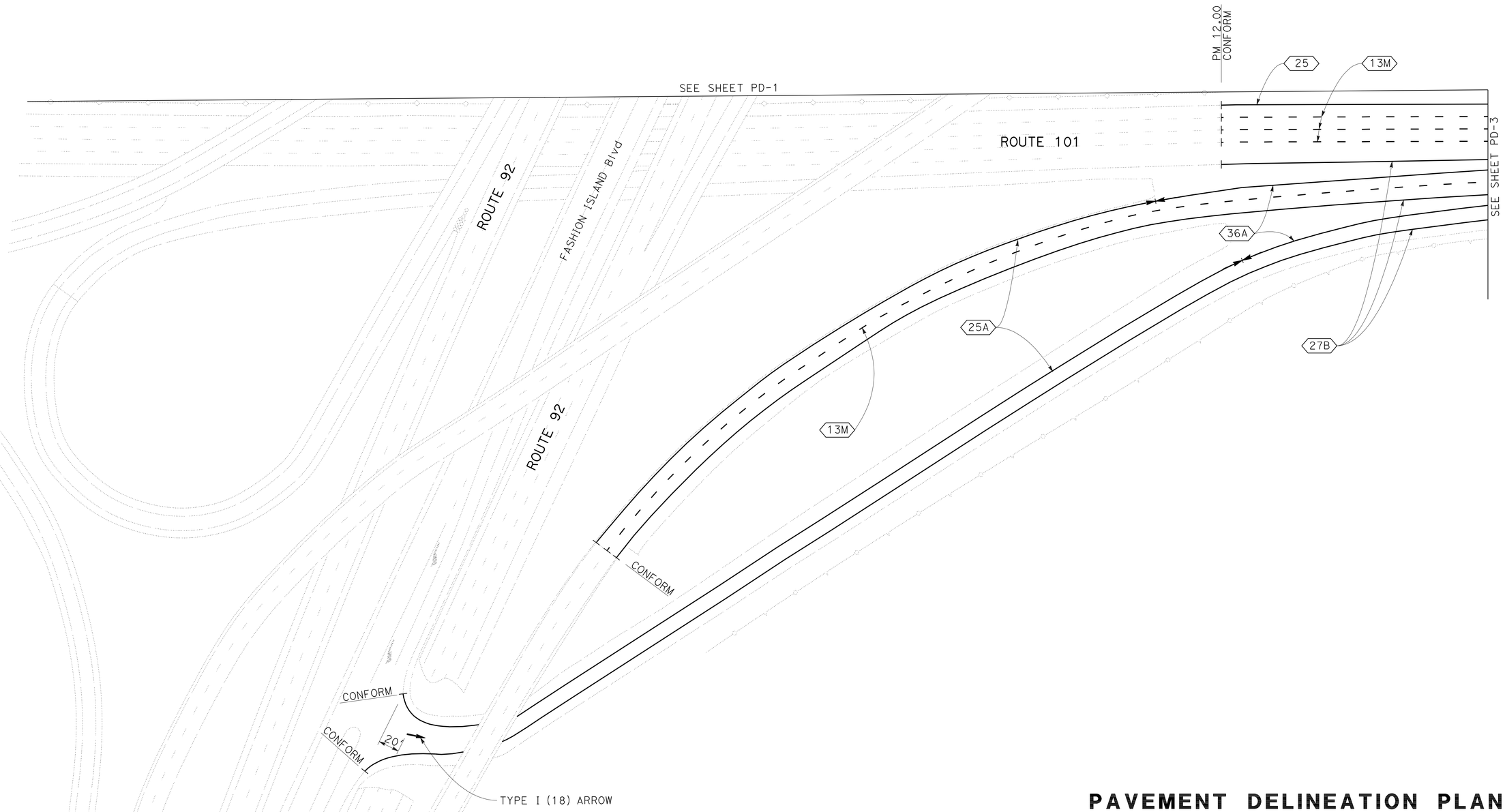

PAVEMENT DELINEATION PLAN

NO SCALE

FOR NOTES AND LEGEND, SEE SHEET PD-1

APPROVED FOR PAVEMENT DELINEATION WORK ONLY

PD-2

STATE OF CALIFORNIA - DEPARTMENT OF TRANSPORTATION
Caltrans
DESIGN

FUNCTIONAL SUPERVISOR: RONNIE CHUA
CALCULATED-DESIGNED BY: MUSTAQUR RAHMAN
CHECKED BY: RONNIE CHUA
REVISED BY
DATE REVISED

LAST REVISION 12-14-11
DATE PLOTTED => 01-FEB-2012
TIME PLOTTED => 09:10

Dist	COUNTY	ROUTE	POST MILES TOTAL PROJECT	SHEET No.	TOTAL SHEETS
04	SM	101	12.0/13.5	21	56

REGISTERED CIVIL ENGINEER — DATE: 1-10-12

PLANS APPROVAL DATE: 1-23-12

REGISTERED PROFESSIONAL ENGINEER — Md Mustaqur Rahman — No. 75824 — Exp. 6-30-12 — CIVIL — STATE OF CALIFORNIA

THE STATE OF CALIFORNIA OR ITS OFFICERS OR AGENTS SHALL NOT BE RESPONSIBLE FOR THE ACCURACY OR COMPLETENESS OF SCANNED COPIES OF THIS PLAN SHEET.

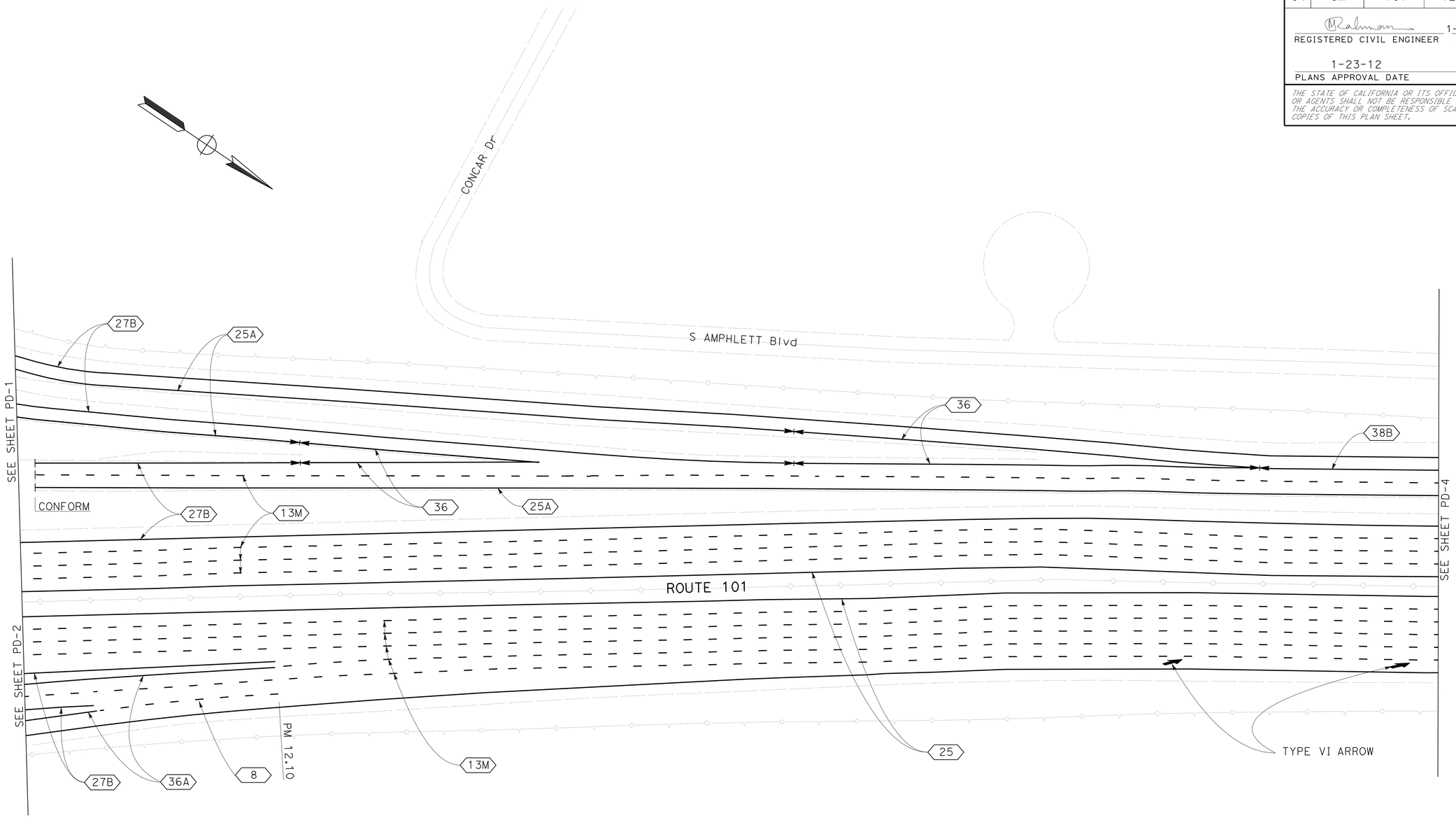

PAVEMENT DELINEATION PLAN

NO SCALE

APPROVED FOR PAVEMENT DELINEATION WORK ONLY

FOR NOTES AND LEGEND, SEE SHEET PD-1

PD-3

STATE OF CALIFORNIA - DEPARTMENT OF TRANSPORTATION

Caltrans® DESIGN

FUNCTIONAL SUPERVISOR: RONNIE CHUA

CALCULATED-DESIGNED BY: MUSTAQUR RAHMAN

CHECKED BY: RONNIE CHUA

REVISED BY

DATE REVISED

LAST REVISION 12-14-11

DATE PLOTTED => 01-FEB-2012

TIME PLOTTED => 09:10

Dist	COUNTY	ROUTE	POST MILES TOTAL PROJECT	SHEET No.	TOTAL SHEETS
04	SM	101	12.0/13.5	22	56

REGISTERED CIVIL ENGINEER 1-10-12 DATE

1-23-12
PLANS APPROVAL DATE

Md Mustaqur Rahman No. 75824 Exp. 6-30-12 CIVIL
REGISTERED PROFESSIONAL ENGINEER
STATE OF CALIFORNIA

THE STATE OF CALIFORNIA OR ITS OFFICERS OR AGENTS SHALL NOT BE RESPONSIBLE FOR THE ACCURACY OR COMPLETENESS OF SCANNED COPIES OF THIS PLAN SHEET.

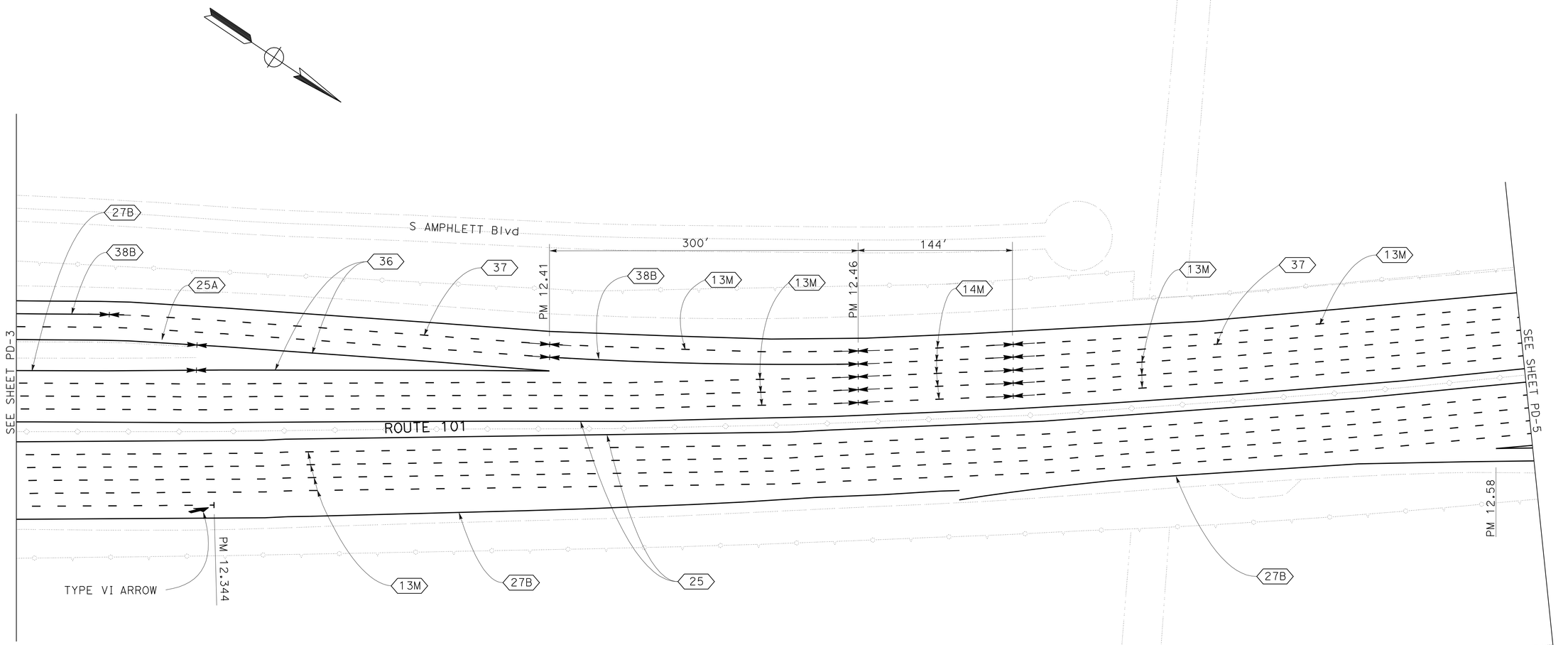

PAVEMENT DELINEATION PLAN

NO SCALE

APPROVED FOR PAVEMENT DELINEATION WORK ONLY

FOR NOTES AND LEGEND, SEE SHEET PD-1

PD-4

REVISED BY | DATE REVISED
MUSTAQUR RAHMAN | RONNIE CHUA
CALCULATED-DESIGNED BY | CHECKED BY
FUNCTIONAL SUPERVISOR
RONNIE CHUA

STATE OF CALIFORNIA - DEPARTMENT OF TRANSPORTATION
Caltrans
DESIGN

LAST REVISION 01-06-12 | DATE PLOTTED => 01-FEB-2012 | TIME PLOTTED => 09:10

BORDER LAST REVISED 7/2/2010 | USERNAME => s130819 | DGN FILE => 0400021099na004.dgn | RELATIVE BORDER SCALE IS IN INCHES 0 1 2 3 | UNIT 0976 | PROJECT NUMBER & PHASE 04000210991

Dist	COUNTY	ROUTE	POST MILES TOTAL PROJECT	SHEET No.	TOTAL SHEETS
04	SM	101	12.0/13.5	23	56

REGISTERED CIVIL ENGINEER 1-10-12 DATE

1-23-12
PLANS APPROVAL DATE

REGISTERED PROFESSIONAL ENGINEER
Md Mustaqur Rahman
No. 75824
Exp. 6-30-12
CIVIL
STATE OF CALIFORNIA

THE STATE OF CALIFORNIA OR ITS OFFICERS OR AGENTS SHALL NOT BE RESPONSIBLE FOR THE ACCURACY OR COMPLETENESS OF SCANNED COPIES OF THIS PLAN SHEET.

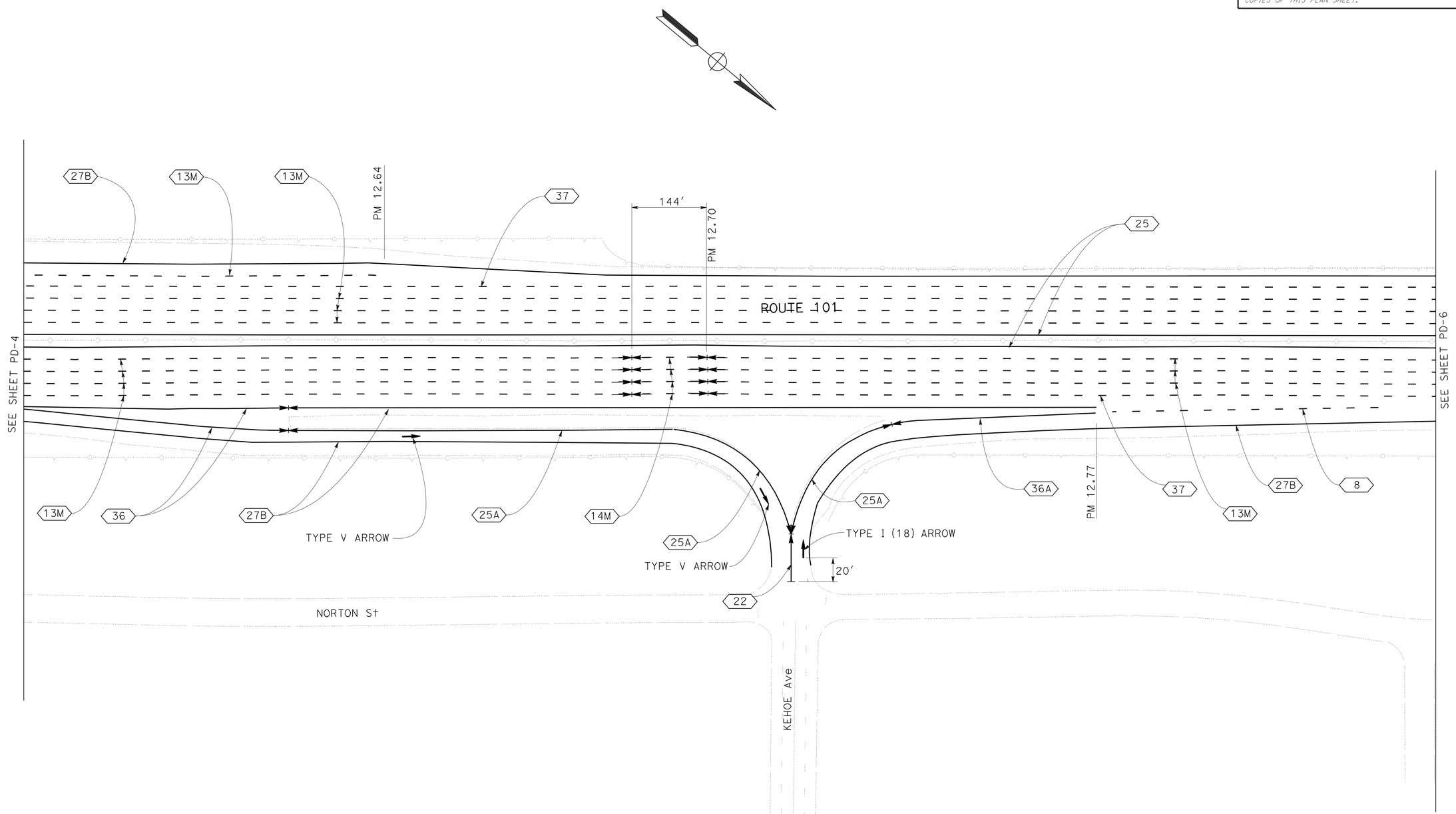

PAVEMENT DELINEATION PLAN

NO SCALE

APPROVED FOR PAVEMENT DELINEATION WORK ONLY

FOR NOTES AND LEGEND, SEE SHEET PD-1

PD-5

STATE OF CALIFORNIA - DEPARTMENT OF TRANSPORTATION
Caltrans
DESIGN

FUNCTIONAL SUPERVISOR: RONNIE CHUA

CALCULATED-DESIGNED BY: MUSTAQUR RAHMAN
CHECKED BY: RONNIE CHUA

REVISED BY
DATE REVISED

LAST REVISION DATE PLOTTED => 01-FEB-2012
TIME PLOTTED => 09:10
01-06-12

Dist	COUNTY	ROUTE	POST MILES TOTAL PROJECT	SHEET No.	TOTAL SHEETS
04	SM	101	12.0/13.5	24	56

REGISTERED CIVIL ENGINEER 1-10-12 DATE

1-23-12
PLANS APPROVAL DATE

REGISTERED PROFESSIONAL ENGINEER
Md Mustaqur Rahman
No. 75824
Exp. 6-30-12
CIVIL
STATE OF CALIFORNIA

THE STATE OF CALIFORNIA OR ITS OFFICERS OR AGENTS SHALL NOT BE RESPONSIBLE FOR THE ACCURACY OR COMPLETENESS OF SCANNED COPIES OF THIS PLAN SHEET.

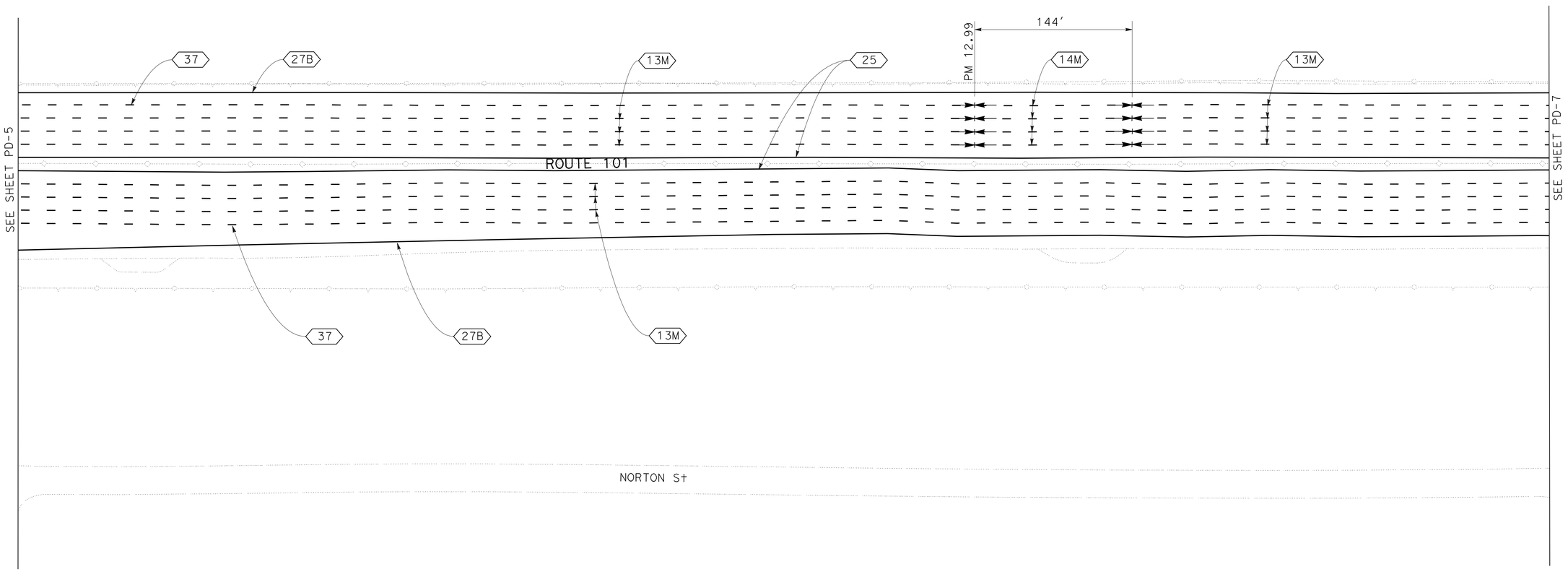

PAVEMENT DELINEATION PLAN

NO SCALE

APPROVED FOR PAVEMENT DELINEATION WORK ONLY

FOR NOTES AND LEGEND, SEE SHEET PD-1

PD-6

STATE OF CALIFORNIA - DEPARTMENT OF TRANSPORTATION
Caltrans®
DESIGN

FUNCTIONAL SUPERVISOR: RONNIE CHUA
CALCULATED-DESIGNED BY: MUSTAQUR RAHMAN
CHECKED BY: RONNIE CHUA
REVISED BY
DATE REVISED

LAST REVISION 01-06-12
DATE PLOTTED => 01-FEB-2012
TIME PLOTTED => 09:10

Dist	COUNTY	ROUTE	POST MILES TOTAL PROJECT	SHEET No.	TOTAL SHEETS
04	SM	101	12.0/13.5	25	56

REGISTERED CIVIL ENGINEER 1-10-12 DATE

1-23-12
PLANS APPROVAL DATE

REGISTERED PROFESSIONAL ENGINEER
Md Mustaqur Rahman
No. 75824
Exp. 6-30-12
CIVIL
STATE OF CALIFORNIA

THE STATE OF CALIFORNIA OR ITS OFFICERS OR AGENTS SHALL NOT BE RESPONSIBLE FOR THE ACCURACY OR COMPLETENESS OF SCANNED COPIES OF THIS PLAN SHEET.

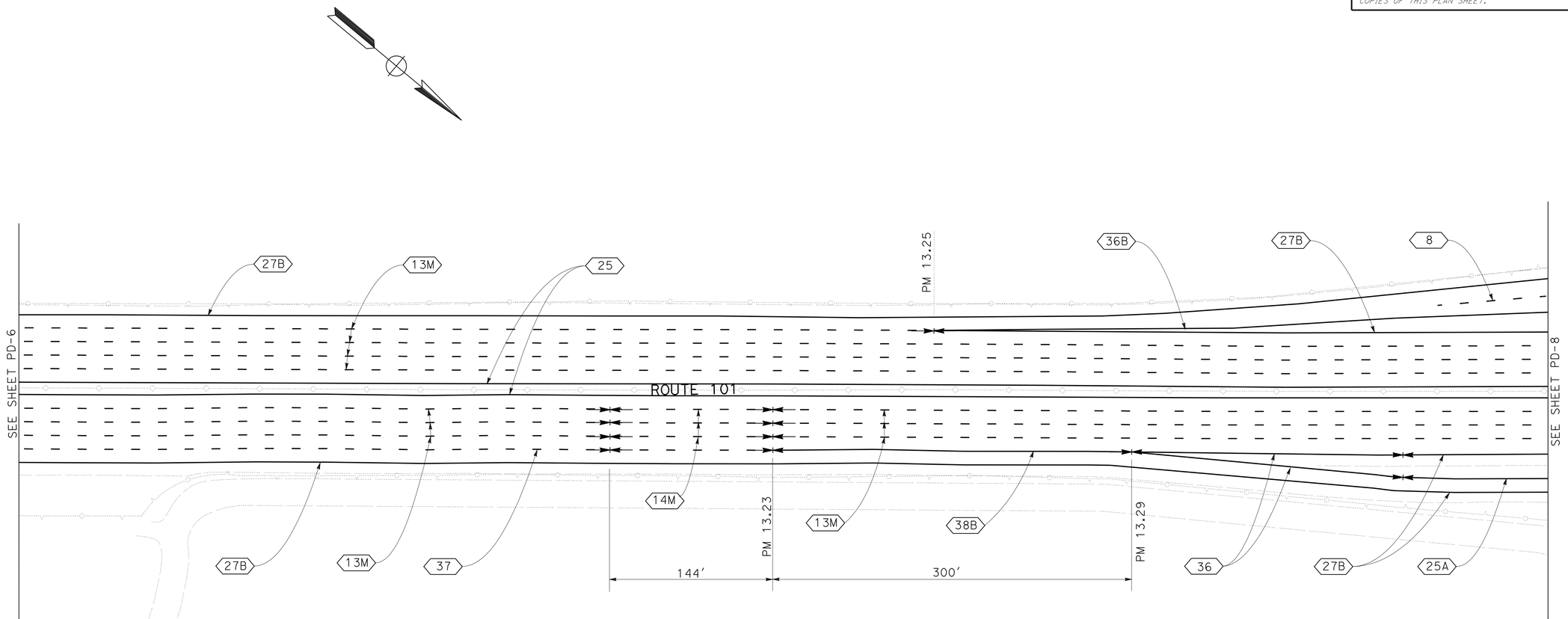

PAVEMENT DELINEATION PLAN

NO SCALE

APPROVED FOR PAVEMENT DELINEATION WORK ONLY

FOR NOTES AND LEGEND, SEE SHEET PD-1

PD-7

STATE OF CALIFORNIA - DEPARTMENT OF TRANSPORTATION
Caltrans
DESIGN

FUNCTIONAL SUPERVISOR: RONNIE CHUA
CALCULATED-DESIGNED BY: MUSTAQUR RAHMAN
CHECKED BY: RONNIE CHUA
REVISED BY
DATE REVISED

LAST REVISION 12-14-11
DATE PLOTTED => 01-FEB-2012
TIME PLOTTED => 09:10

Dist	COUNTY	ROUTE	POST MILES TOTAL PROJECT	SHEET No.	TOTAL SHEETS
04	SM	101	12.0/13.5	26	56

REGISTERED CIVIL ENGINEER 1-10-12 DATE

1-23-12
PLANS APPROVAL DATE

REGISTERED PROFESSIONAL ENGINEER Md Mustaqur Rahman No. 75824 Exp. 6-30-12 CIVIL STATE OF CALIFORNIA

THE STATE OF CALIFORNIA OR ITS OFFICERS OR AGENTS SHALL NOT BE RESPONSIBLE FOR THE ACCURACY OR COMPLETENESS OF SCANNED COPIES OF THIS PLAN SHEET.

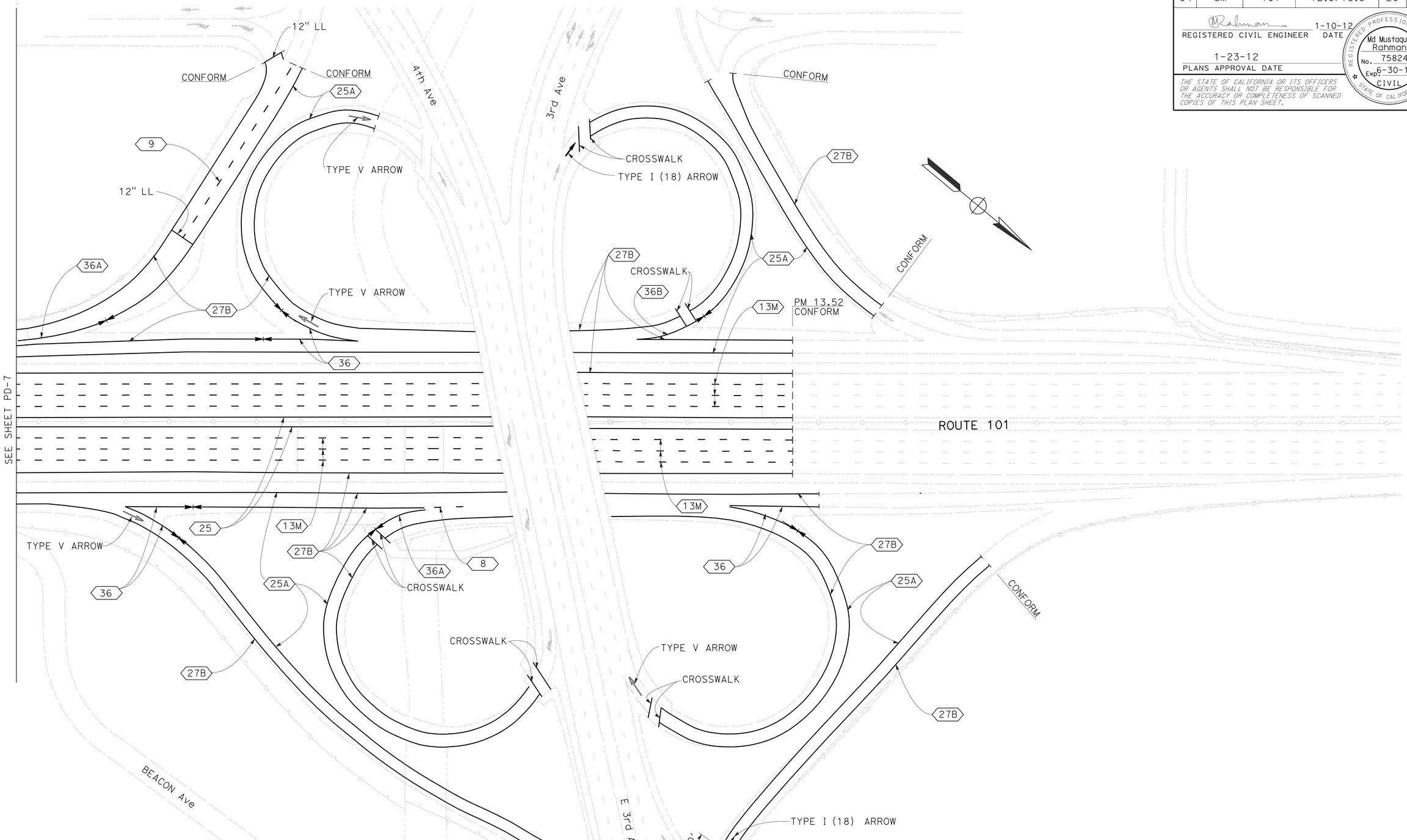

PAVEMENT DELINEATION PLAN

NO SCALE

APPROVED FOR PAVEMENT DELINEATION WORK ONLY

FOR NOTES AND LEGEND, SEE SHEET PD-1

PD-8

STATE OF CALIFORNIA - DEPARTMENT OF TRANSPORTATION

Caltrans®

DESIGN

FUNCTIONAL SUPERVISOR: RONNIE CHUA

CALCULATED-DESIGNED BY: MUSTAQUR RAHMAN

CHECKED BY: RONNIE CHUA

REVISED BY

DATE REVISED

LAST REVISION 01-09-12

DATE PLOTTED => 01-FEB-2012

TIME PLOTTED => 09:10

Dist	COUNTY	ROUTE	POST MILES TOTAL PROJECT	SHEET No.	TOTAL SHEETS
04	SM	101	12.0/13.5	27	56

REGISTERED CIVIL ENGINEER 1-10-12 DATE

1-23-12
PLANS APPROVAL DATE

REGISTERED PROFESSIONAL ENGINEER Md Mustaqur Rahman No. 75824 Exp. 6-30-12 CIVIL STATE OF CALIFORNIA

THE STATE OF CALIFORNIA OR ITS OFFICERS OR AGENTS SHALL NOT BE RESPONSIBLE FOR THE ACCURACY OR COMPLETENESS OF SCANNED COPIES OF THIS PLAN SHEET.

PAVEMENT DELINEATION QUANTITIES (RAMPS)

LOCATION OF RAMP	DIRECTION	DESCRIPTION	DETAIL No. OR PAVEMENT MARKING	THERMOPLASTIC TRAFFIC STRIPE 4" YELLOW	THERMOPLASTIC TRAFFIC STRIPE 4" WHITE	THERMOPLASTIC TRAFFIC STRIPE 4" WHITE (BROKEN 34-14)	THERMOPLASTIC TRAFFIC STRIPE 4" WHITE (BROKEN 17-7)	THERMOPLASTIC TRAFFIC STRIPE 8" WHITE	THERMOPLASTIC TRAFFIC STRIPE 8" WHITE (BROKEN 12-3)	PAVEMENT MARKER NON-REFLECTIVE TYPE A	PAVEMENT MARKER RETRO-REFLECTIVE TYPE C	PAVEMENT MARKER RETRO-REFLECTIVE TYPE G	PAVEMENT MARKER RETRO-REFLECTIVE TYPE H	THERMOPLASTIC PAVEMENT MARKING WHITE	REMOVE THERMOPLASTIC PAVEMENT STRIPE 4" YELLOW	REMOVE THERMOPLASTIC PAVEMENT STRIPE 4" WHITE	REMOVE THERMOPLASTIC PAVEMENT STRIPE 4" WHITE (BROKEN 34-14)	REMOVE THERMOPLASTIC PAVEMENT STRIPE 4" WHITE (BROKEN 17-7)	REMOVE THERMOPLASTIC PAVEMENT STRIPE 8" WHITE	REMOVE THERMOPLASTIC PAVEMENT STRIPE 8" WHITE (BROKEN 12-3)	REMOVE THERMOPLASTIC PAVEMENT MARKING WHITE	REMOVE PAVEMENT MARKER
PM				LF						EA				SQFT	LF						SQFT	EA
12.034	NB	NB ON-RAMP FROM FASHION ISLAND Blvd	25A	1000									43		1000							43
			27B		1500											1500						
			36A					310				14							310			14
			8				170									50		170				
			1 No. TYPE I (18) ARROW											25							25	
12.100	NB	NB CONNECTOR ON-RAMP FROM WB ROUTE 92	25A	630									27		630							27
			27B		1020											1020						
			36A					565				25							565			25
			13M			1200				104		26					1200					130
12.108	SB	SEG SB OFF-RAMP TO FASHION ISLAND Blvd	25A	920									39		920							39
			27B		1635											1635						
			36					500				22							500			22
			38					540				24							540			24
			3 Nos. TYPE III(R) ARROW											126							126	
			2 Nos. TYPE II(L) ARROW											90							90	
			2 Nos. TYPE III(L) ARROW											84							84	
			12" LMIT LINE											50							50	
12.218	SB	SEG SB OFF-RAMP TO EB ROUTE 92	25A	230									11		230							11
			27B		1495											1495						
			13M			1920				164		41					1920					205
			36					700				30							700			30
12.325	SB	SB OFF-RAMP TO ROUTE 92	25A	1240									53		1240							53
			27B		1770											1770						
			36					410				18							410			18
			37						410			29				164				410		29
			38B					265				24							265			24
12.654	NB	NB OFF-RAMP TO KEHOE Ave	25A	590									26									26
			27B		590																	
			36					600				26										26
			2 Nos. TYPE V ARROW											66								
12.724	NB	NB ON-RAMP FROM KEHOE Ave	25A	205									10									10
			27B		410																	
			36A					220				10										10
			8				270											270				
			1 No. TYPE I(18) ARROW											25								
13.311	SB	SB ON-RAMP FROM EAST 3RD/4TH Ave (CONNECTOR/DISTRIBUTOR)	25A	1070									46									46
			27B		760																	
			36B					310				14										14
13.324	NB	NB OFF-RAMP TO EAST 3RD/4TH Ave (CONNECTOR/DISTRIBUTOR)	25A	1245									53									53
			27B		860																	
			36					440				19										19
		SHEET TOTAL		7130	10040	3120	440	4860	410	268		322	308	466	4020	7634	3120	440	3290	410	375	898

REVISED BY | DATE REVISED
MUSTAQUR RAHMAN | RONNIE CHUA
CALCULATED-DESIGNED BY | CHECKED BY
FUNCTIONAL SUPERVISOR | RONNIE CHUA
STATE OF CALIFORNIA - DEPARTMENT OF TRANSPORTATION
Caltrans®
DESIGN

PAVEMENT DELINEATION QUANTITIES

PDQ-1

LAST REVISION 01-09-12 | DATE PLOTTED => 01-FEB-2012 | TIME PLOTTED => 09:10

Dist	COUNTY	ROUTE	POST MILES TOTAL PROJECT	SHEET No.	TOTAL SHEETS
04	SM	101	12.0/13.5	28	56

REGISTERED CIVIL ENGINEER 1-10-12 DATE

1-23-12
PLANS APPROVAL DATE

REGISTERED PROFESSIONAL ENGINEER Md Mustaqur Rahman No. 75824 Exp. 6-30-12 CIVIL STATE OF CALIFORNIA

THE STATE OF CALIFORNIA OR ITS OFFICERS OR AGENTS SHALL NOT BE RESPONSIBLE FOR THE ACCURACY OR COMPLETENESS OF SCANNED COPIES OF THIS PLAN SHEET.

PAVEMENT DELINEATION QUANTITIES (RAMPS)

LOCATION OF RAMP PM	DIRECTION	DESCRIPTION	DETAIL No. OR PAVEMENT MARKING	THERMOPLASTIC TRAFFIC STRIPE 4" YELLOW (LF)	THERMOPLASTIC TRAFFIC STRIPE 4" WHITE (LF)	THERMOPLASTIC TRAFFIC STRIPE 4" WHITE (BROKEN 17-7) (LF)	THERMOPLASTIC TRAFFIC STRIPE 8" WHITE (LF)	PAVEMENT MARKER RETRO-REFLECTIVE TYPE C (EA)	PAVEMENT MARKER RETRO-REFLECTIVE TYPE G (EA)	PAVEMENT MARKER RETRO-REFLECTIVE TYPE H (EA)	THERMOPLASTIC PAVEMENT MARKING WHITE (SQFT)	REMOVE PAVEMENT MARKER (EA)
13.361	SB	SEG SB ON-RAMP FROM EAST 4TH Ave	25A	475						21		21
			27B		965							
			36A				90		5			5
			8			100						
			9			360			9			9
			12" LIMIT LINE				45				70	
13.362	SB	SEG SB ON-RAMP FROM WB EAST 3RD Ave	25A	400						18		18
			27B		410							
			36B				70		4			4
			1 No. TYPE I(18) ARROW								25	
			CROSSWALK								84	
13.384	NB	SEG NB OFF-RAMP TO WB EAST 3RD Ave	25A	425						19		19
			27B		460							
			36				110		6			6
			1 No. TYPE V ARROW								33	
			CROSSWALK								50	
13.385	NB	SEG NB OFF-RAMP TO EB EAST 3RD Ave	25A	645						28		28
			27B		910							
			36				90		5			5
			CROSSWALK								42	
			2 Nos. TYPE V ARROW								66	
13.531	SB	SEG SB OFF-RAMP TO EB EAST 4TH Ave	25A	415						18		18
			27B		445							
			36				135		7			7
			1 No. TYPE I(18) ARROW								25	
			1 No. TYPE V ARROW								33	
13.532	SB	SEG SB OFF-RAMP TO WB EAST 3RD Ave	25A	310						14		14
			27B		290							
13.564	NB	NB ON-RAMP FROM WB EAST 3RD Ave	25A	525						23		23
			27B		525							
			CROSSWALK								60	
			1 No. TYPE I(18) ARROW								25	
13.565	NB	SEG NB ON-RAMP FROM EAST 3RD/4TH Ave	25A	440						19		19
			27B		440							
			CROSSWALK								100	
SHEET TOTAL				3635	4445	460	540		36	160	613	196

STATE OF CALIFORNIA - DEPARTMENT OF TRANSPORTATION
Caltrans® DESIGN

FUNCTIONAL SUPERVISOR: RONNIE CHUA
CALCULATED-DESIGNED BY: MUSTAQUR RAHMAN
CHECKED BY: RONNIE CHUA
REVISED BY
DATE REVISED

PAVEMENT DELINEATION QUANTITIES

PDQ-2

LAST REVISION 01-09-12
DATE PLOTTED => 01-FEB-2012
TIME PLOTTED => 09:10

Dist	COUNTY	ROUTE	POST MILES TOTAL PROJECT	SHEET No.	TOTAL SHEETS
04	SM	101	12.0/13.5	29	56

REGISTERED CIVIL ENGINEER 1-10-12 DATE

1-23-12
PLANS APPROVAL DATE

REGISTERED PROFESSIONAL ENGINEER Md Mustaqur Rahman No. 75824 Exp. 6-30-12 CIVIL STATE OF CALIFORNIA

THE STATE OF CALIFORNIA OR ITS OFFICERS OR AGENTS SHALL NOT BE RESPONSIBLE FOR THE ACCURACY OR COMPLETENESS OF SCANNED COPIES OF THIS PLAN SHEET.

PAVEMENT DELINEATION QUANTITIES (MAINLINE)

LOCATION (PM)	DIRECTION	DETAIL No. OR PAVEMENT MARKING	THERMOPLASTIC TRAFFIC STRIPE 4" YELLOW	THERMOPLASTIC TRAFFIC STRIPE 4" WHITE	THERMOPLASTIC TRAFFIC STRIPE 4" WHITE (BROKEN 34-14)	THERMOPLASTIC TRAFFIC STRIPE 8" WHITE	THERMOPLASTIC TRAFFIC STRIPE 8" WHITE (BROKEN 12-3)	PAVEMENT MARKER NON-REFLECTIVE TYPE A	PAVEMENT MARKER RETRO-REFLECTIVE TYPE C	PAVEMENT MARKER RETRO-REFLECTIVE TYPE G	PAVEMENT MARKER RETRO-REFLECTIVE TYPE H	THERMOPLASTIC PAVEMENT MARKING WHITE	REMOVE THERMOPLASTIC PAVEMENT STRIPE 4" YELLOW	REMOVE THERMOPLASTIC PAVEMENT STRIPE 4" WHITE	REMOVE THERMOPLASTIC PAVEMENT STRIPE 4" WHITE (BROKEN 34-14)	REMOVE THERMOPLASTIC PAVEMENT STRIPE 8" WHITE	REMOVE THERMOPLASTIC PAVEMENT STRIPE 8" WHITE (BROKEN 12-3)	REMOVE THERMOPLASTIC PAVEMENT MARKING WHITE	REMOVE PAVEMENT MARKER
			LF					EA				SQFT	LF					SQFT	EA
12.00 TO 12.38	NB	13M			6019			514		128					6019				642
		25	2006								43		2006						43
		27B		2006										2006					
12.10 TO 12.38	NB	13M			2786			244		61					2786				305
		3 Nos. TYPE VI ARROW										126						126	
12.38 TO 12.63	NB	13M			5280			456		114									570
		25	1320								29								29
		27B		1320															
12.63 TO 13.52	NB	13M			13090			1103		276					13090				1379
		25	4699								99		4699						99
		27B		4699										4699					
12.63 TO 12.68	NB	13M			238			24		6					238				30
12.68 TO 13.23	NB	14M			1008			84	28						1008				112
12.70 TO 13.23	NB	37					2798		16	173							2798		189
13.23 TO 13.29	NB	38B				317				28						317			28
12.00 TO 13.52	SB	13M			23069			1934		484					23069				2418
		25	8026								168		8026						168
		27B		8026										8026					
12.46 TO 13.00	SB	14M			1152			96	32						1152				128
12.41 TO 12.64	SB	13M			1070			93		23					1070				116
12.41 TO 12.46	SB	38B				264				24						264			24
12.46 TO 12.99	SB	37					2798		16	173							2798		189
12.99 TO 13.25	SB	13M			1373			118		30					1373				148
SHEET TOTAL			16051	16051	55084	581	5597	4666	92	1520	339	126	14731	14731	49804	581	5597	126	6617

SUMMARY OF PAVEMENT DELINEATION QUANTITIES

SHEET No.	THERMOPLASTIC TRAFFIC STRIPE 4" YELLOW	THERMOPLASTIC TRAFFIC STRIPE 4" WHITE	THERMOPLASTIC TRAFFIC STRIPE 4" WHITE (BROKEN 34-14)	THERMOPLASTIC TRAFFIC STRIPE 4" WHITE (BROKEN 17-7)	THERMOPLASTIC TRAFFIC STRIPE 8" WHITE	THERMOPLASTIC TRAFFIC STRIPE 8" WHITE (BROKEN 12-3)	PAVEMENT MARKER NON-REFLECTIVE TYPE A	PAVEMENT MARKER RETRO-REFLECTIVE TYPE C	PAVEMENT MARKER RETRO-REFLECTIVE TYPE G	PAVEMENT MARKER RETRO-REFLECTIVE TYPE H	THERMOPLASTIC PAVEMENT MARKING WHITE	REMOVE THERMOPLASTIC PAVEMENT STRIPE 4" YELLOW	REMOVE THERMOPLASTIC PAVEMENT STRIPE 4" WHITE	REMOVE THERMOPLASTIC PAVEMENT STRIPE 4" WHITE (BROKEN 34-14)	REMOVE THERMOPLASTIC PAVEMENT STRIPE 4" WHITE (BROKEN 17-7)	REMOVE THERMOPLASTIC PAVEMENT STRIPE 8" WHITE	REMOVE THERMOPLASTIC PAVEMENT STRIPE 8" WHITE (BROKEN 12-3)	REMOVE THERMOPLASTIC PAVEMENT MARKING WHITE	REMOVE PAVEMENT MARKER
	LF						EA				SQFT	LF						SQFT	EA
PDQ 1	7130	10040	3120	440	4860	410	268		322	308	466	4020	7634	3120	440	3290	410	375	898
PDQ 2	3635	4445		460	540				36	160	613								196
PDQ 3	16051	16051	55084		581	5597	4666	92	1520	339	126	14731	14731	49804		581	5597	126	6617
TOTAL	26816	30536	58204	900	5981	6007	4934	92	1878	807	1205	18751	22365	52924	440	3871	6007	501	7711
GRAND TOTAL	116456				5981	6007	4934	2777			1205	18751	50477					501	7711

PAVEMENT DELINEATION QUANTITIES

PDQ-3

REVISED BY | DATE REVISED
MUSTAQUR RAHMAN | RONNIE CHUA
CALCULATED-DESIGNED BY | CHECKED BY
FUNCTIONAL SUPERVISOR | RONNIE CHUA
STATE OF CALIFORNIA - DEPARTMENT OF TRANSPORTATION
Caltrans® DESIGN

LAST REVISION 01-09-12 | DATE PLOTTED => 01-FEB-2012 | TIME PLOTTED => 09:10

Dist	COUNTY	ROUTE	POST MILES TOTAL PROJECT	SHEET No.	TOTAL SHEETS
04	SM	101	12.0/13.5	30	56

REGISTERED CIVIL ENGINEER 1-10-12 DATE

1-23-12
PLANS APPROVAL DATE

REGISTERED PROFESSIONAL ENGINEER
Md Mustaqur Rahman
No. 75824
Exp. 6-30-12
CIVIL
STATE OF CALIFORNIA

THE STATE OF CALIFORNIA OR ITS OFFICERS OR AGENTS SHALL NOT BE RESPONSIBLE FOR THE ACCURACY OR COMPLETENESS OF SCANNED COPIES OF THIS PLAN SHEET.

ROADWAY QUANTITIES (MAINLINE)

LOCATION (PM)	DIRECTION	LANE No.	COLD PLANE AC PAVEMENT (0.10' MAX)	HOT MIX ASPHALT (BONDED WEARING COARSE-GAP GRADED)	ASPHALTIC EMULSION MEMBRANE (BWC)	CRACK TREATMENT
			SQYD	TON		LNMI
12.00 TO 12.38	NB	1, 2, 3 & 4	133	722.30	9.11	
12.00 TO 13.38	SB	1, 2, 3 & 4	150	2623.10	33.07	
12.10 TO 12.38	NB	5 & 6		266.11	3.36	
12.38 TO 12.63	NB	1, 2, 3, 4 & 5	9156	618.00	7.79	
13.38 TO 13.52	SB	1, 2, 3 & 4		266.11	3.36	
13.44 TO 13.45	NB	1, 2, 3 & 4	267	18.00	0.23	5
12.46 TO 12.64	SB	AUX LANES		171.07	2.16	
12.63 TO 13.42	NB	1, 2, 3 & 4		1501.63	18.93	
12.63 TO 13.29	NB	5 & AUX LANE		313.63	3.95	
12.64 TO 12.99	SB	AUX LANE		176.07	2.22	
12.99 TO 13.25	SB	5		123.55	1.56	
SUBTOTAL			9706	6799.59	85.73	5

ROADWAY QUANTITIES (SHOULDER)

LOCATION (PM)	DIRECTION	SHOULDER	COLD PLANE AC PAVEMENT (0.10' MAX)	HOT MIX ASPHALT (BONDED WEARING COARSE-GAP GRADED)	ASPHALTIC EMULSION MEMBRANE (BWC)
			SQYD	TON	
12.00 TO 12.38	NB	INSIDE SHOULDER		180.58	2.28
		OUTSIDE SHOULDER		150.48	1.90
12.38 TO 12.63		INSIDE SHOULDER	1173	79.20	1.00
12.38 TO 12.74		OUTSIDE SHOULDER	2112	142.56	1.80
12.63 TO 13.42		INSIDE SHOULDER		187.70	2.37
12.74 TO 13.14		OUTSIDE SHOULDER		312.84	3.94
13.14 TO 13.33		OUTSIDE SHOULDER	2347	158.40	2.00
13.33 TO 13.42		OUTSIDE SHOULDER		75.24	0.95
13.42 TO 13.48		INSIDE SHOULDER	176	11.86	0.15
13.42 TO 13.52		OUTSIDE SHOULDER	587	39.60	0.50
12.00 TO 12.45	SB	INSIDE SHOULDER		213.84	2.70
12.45 TO 13.38		INSIDE SHOULDER		220.97	2.79
12.00 TO 12.68		OUTSIDE SHOULDER		323.14	4.07
12.68 TO 13.38		OUTSIDE SHOULDER	4928	332.64	4.19
13.38 TO 13.52		INSIDE SHOULDER		66.53	0.84
		OUTSIDE SHOULDER		55.44	0.70
SUBTOTAL			11323	2551.03	32.16

SHOULDER BACKING

LOCATION (PM)	DIRECTION	DESCRIPTION	SHOULDER BACKING
			TON
12.00 TO 12.63	NB	BETWEEN NB ON-RAMP FROM FASHION ISLAND Blvd AND NB OFF-RAMP TO KEHOE Ave	125
12.00 TO 13.35	SB	BETWEEN FASHION ISLAND Blvd AND SB OFF-RAMP TO ROUTE 92	87
12.74 TO 13.14	NB	BETWEEN NB ON-RAMP FROM KEHOE Ave AND NB OFF-RAMP TO EAST 3RD/4TH Ave	99
13.38 TO 13.52	SB	BETWEEN SB OFF-RAMP TO 3RD/4TH Ave AND SB ON-RAMP FROM 3RD/4TH Ave	35
12.034	NB	NB ON-RAMP FROM FASHION ISLAND Blvd	80
12.100	NB	NB CONNECTOR ON-RAMP FROM WB ROUTE 92	59
12.108	SB	SEG SB OFF-RAMP TO FASHION ISLAND Blvd	96
12.218	SB	SEG SB OFF-RAMP TO EB ROUTE 92	33
12.325	SB	SB OFF-RAMP TO ROUTE 92	164
SUBTOTAL			425

SUMMARY OF QUANTITIES

Q-1

STATE OF CALIFORNIA - DEPARTMENT OF TRANSPORTATION
Caltrans® DESIGN

FUNCTIONAL SUPERVISOR: RONNIE CHUA
CALCULATED-DESIGNED BY: MUSTAQUR RAHMAN
CHECKED BY: RONNIE CHUA
REVISED BY
DATE REVISED

LAST REVISION 12-14-11
DATE PLOTTED => 01-FEB-2012
TIME PLOTTED => 09:10

Dist	COUNTY	ROUTE	POST MILES TOTAL PROJECT	SHEET No.	TOTAL SHEETS
04	SM	101	12.0/13.5	31	56

REGISTERED CIVIL ENGINEER 1-10-12 DATE

1-23-12
PLANS APPROVAL DATE

REGISTERED PROFESSIONAL ENGINEER Md Mustaqur Rahman No. 75824 Exp. 6-30-12 CIVIL STATE OF CALIFORNIA

THE STATE OF CALIFORNIA OR ITS OFFICERS OR AGENTS SHALL NOT BE RESPONSIBLE FOR THE ACCURACY OR COMPLETENESS OF SCANNED COPIES OF THIS PLAN SHEET.

ROADWAY QUANTITIES (RAMP)

LOCATION (PM)	DIRECTION	NAME OF RAMP	DESCRIPTION	COLD PLANE AC PAVEMENT (0.10' Max)	HOT MIX ASPHALT (BONDED WEARING COARSE-GAP GRADED)	ASPHALTIC EMULSION MEMBRANE (BWC)
				SQYD	TON	
12.034	NB	NB ON-RAMP FROM FASHION ISLAND Blvd	RAMP	133	322.50	4.07
			GORE & ADJACENT RAMP(PORTION)		131.25	1.65
12.100	NB	NB CONNECTOR ON-RAMP FROM WB ROUTE 92	RAMP	67	176.25	2.22
			GORE & ADJACENT RAMP(PORTION)		189.00	2.38
12.108	SB	SEG SB OFF-RAMP TO FASHION ISLAND Blvd	RAMP	133	246.00	3.10
			GORE & ADJACENT RAMP(PORTION)		58.88	0.74
12.218	SB	SEG SB OFF-RAMP TO EB ROUTE 92	RAMP	67	264.00	3.33
12.325	SB	SB OF-RAMP TO ROUTE 92	RAMP	67	253.50	3.20
			GORE & ADJACENT RAMP(PORTION)		369.00	4.65
12.654	NB	NB OFF-RAMP TO KEHOE Ave	RAMP	1667	112.50	1.42
			GORE & ADJACENT RAMP(PORTION)	956	64.50	0.81
12.724	NB	NB ON-RAMP FROM KEHOE Ave	RAMP	567	38.25	0.48
			GORE & ADJACENT RAMP(PORTION)		112.50	1.42
13.311	SB	SB ON-RAMP FROM EAST 3RD/4TH Ave	CONNECTOR/DISTRIBUTOR	2000	135.00	1.70
			GORE & ADJACENT RAMP(PORTION)		131.25	1.65
13.324	NB	NB OFF-RAMP TO EAST 3RD/4TH Ave	CONNECTOR/DISTRIBUTOR	2722	183.75	2.32
			GORE & ADJACENT RAMP(PORTION)		37.50	0.47
13.361	SB	SEG SB ON-RAMP FROM EAST 4TH Ave	RAMP	1889	127.50	1.61
13.362	SB	SEG SB ON-RAMP FROM WB EAST 3RD Ave	RAMP	1122	75.75	0.96
			GORE & ADJACENT RAMP(PORTION)	222	15.00	0.19
13.384	NB	SEG NB OFF-RAMP TO WB EAST 3RD Ave	RAMP	1167	78.75	0.99
			GORE & ADJACENT RAMP(PORTION)	211	14.25	0.18
13.385	NB	SEG NB OFF-RAMP TO EB EAST 3RD Ave	RAMP	1667	112.50	1.42
			GORE & ADJACENT RAMP(PORTION)	278	18.75	0.24
13.531	SB	SEG SB OFF-RAMP TO EB EAST 4TH Ave	RAMP	1200	81.00	1.02
			GORE & ADJACENT RAMP(PORTION)	222	15.00	0.19
13.532	SB	SEG SB OFF-RAMP TO WB EAST 3RD Ave	RAMP	1056	71.25	0.90
13.564	NB	NB ON-RAMP FROM WB EAST 3RD Ave	RAMP	1444	97.50	1.23
			GORE & ADJACENT RAMP(PORTION)		18.75	0.24
13.565	NB	SEG NB ON-RAMP FROM EAST 3RD/4TH Ave	RAMP	1111	75.00	0.95
			GORE & ADJACENT RAMP(PORTION)	222	15.00	0.19
SUBTOTAL				20189	3641.63	45.91

INDIVIDUAL SLAB REPLACEMENT (RAPID STRENGTH CONCRETE)

LOCATION (PM)	DIRECTION	LANE No.	No. OF SLABS	TOTAL LENGTH OF SLAB	WIDTH OF SLAB	THICKNESS OF SLAB	INDIVIDUAL SLAB REPLACEMENT (RSC)	GRIND EXISTING CONCRETE PAVEMENT
			EA (N)	LF (N)			CY	SQYD
13.42 TO 13.44	NB	1	5	116	12	0.67	34.54	620
		2	5	116	12	0.67	34.54	
		3	5	116	12	0.67	34.54	
		4	5	116	12	0.67	34.54	
13.45 TO 13.52	NB	1	13	330	12	0.67	98.27	1900
		2	14	308	12	0.67	91.72	
		3	16	336	12	0.67	100.05	
		4	15	330	12	0.67	98.27	
SUBTOTAL							526.47	2520

(N) NOT A SEPARATE PAY ITEM, FOR INFORMATION ONLY

SUMMARY OF QUANTITIES

Q-2

STATE OF CALIFORNIA - DEPARTMENT OF TRANSPORTATION
Caltrans
DESIGN

FUNCTIONAL SUPERVISOR: RONNIE CHUA
CALCULATED-DESIGNED BY: MUSTAQUR RAHMAN
CHECKED BY: RONNIE CHUA
REVISED BY
DATE REVISED

LAST REVISION 12-14-11
DATE PLOTTED => 01-FEB-2012
TIME PLOTTED => 09:10

Dist	COUNTY	ROUTE	POST MILES TOTAL PROJECT	SHEET No.	TOTAL SHEETS
04	SM	101	12.0/13.5	32	56

REGISTERED CIVIL ENGINEER 1-10-12 DATE

1-23-12
PLANS APPROVAL DATE

REGISTERED PROFESSIONAL ENGINEER Md Mustaqur Rahman No. 75824 Exp. 6-30-12 CIVIL STATE OF CALIFORNIA

THE STATE OF CALIFORNIA OR ITS OFFICERS OR AGENTS SHALL NOT BE RESPONSIBLE FOR THE ACCURACY OR COMPLETENESS OF SCANNED COPIES OF THIS PLAN SHEET.

ROADWAY QUANTITIES (MAINLINE)
COLD PLANE AC PAVEMENT (0.35' MAX) AND PLACE HMA (TYPE A)

LOCATION (PM)	DIRECTION	LANE No.	COLD PLANE AC PAVEMENT (0.35' Max) LENGTH	WIDTH	AREA	PAVING MAT	HOT MIX ASPHALT (TYPE A)	TACK COAT
			LF(N)		SQYD		TON	
12.00 TO 13.38	SB	1	50	12	66.67		15.75	0.03
		2	70	12	93.33		22.05	0.04
			50	12	66.67		15.75	0.03
			30	12	40.00		9.45	0.02
			30	12	40.00		9.45	0.02
			30	12	40.00		9.45	0.02
			50	12	66.67		15.75	0.03
		3	50	12	66.67		15.75	0.03
			50	12	66.67		15.75	0.03
			50	12	66.67		15.75	0.03
			500	6	333.33	333.33	78.75	0.43
			150	12	200.00		47.25	0.09
			30	12	40.00		9.45	0.02
			300	6	200.00	200.00	47.25	0.26
			100	6	66.67		15.75	0.03
			300	12	400.00	400.00	94.50	0.51
			150	12	200.00		47.25	0.09
			200	12	266.67		63.00	0.11
			150	12	200.00		47.25	0.09
		4	200	6	133.33		31.50	0.06
			300	6	200.00	200.00	47.25	0.26
			400	12	533.33	533.33	126.00	0.68
			50	12	66.67		15.75	0.03
			30	12	40.00		9.45	0.02
			60	12	80.00		18.90	0.03
			150	6	100.00		23.63	0.04
		AUXILIARY LANE	30	12	40.00		9.45	0.02
			50	6	33.33		7.88	0.01
	SUBTOTAL				3746.67	1666.67	885.15	3.01

(N) NOT A SEPARATE PAY ITEM. FOR INFORMATION ONLY.

SUMMARY OF QUANTITIES

Q-3

REVISED BY | DATE REVISED
MUSTAQUR RAHMAN | RONNIE CHUA
CALCULATED-DESIGNED BY | CHECKED BY
FUNCTIONAL SUPERVISOR: RONNIE CHUA
STATE OF CALIFORNIA - DEPARTMENT OF TRANSPORTATION
Caltrans DESIGN

LAST REVISION 12-14-11 | DATE PLOTTED => 01-FEB-2012 | TIME PLOTTED => 09:11

Dist	COUNTY	ROUTE	POST MILES TOTAL PROJECT	SHEET No.	TOTAL SHEETS
04	SM	101	12.0/13.5	33	56

REGISTERED CIVIL ENGINEER 1-10-12 DATE

1-23-12
PLANS APPROVAL DATE

REGISTERED PROFESSIONAL ENGINEER Md Mustaqur Rahman No. 75824 Exp. 6-30-12 CIVIL STATE OF CALIFORNIA

THE STATE OF CALIFORNIA OR ITS OFFICERS OR AGENTS SHALL NOT BE RESPONSIBLE FOR THE ACCURACY OR COMPLETENESS OF SCANNED COPIES OF THIS PLAN SHEET.

ROADWAY QUANTITIES (MAINLINE)
COLD PLANE AC PAVEMENT (0.35' MAX) AND PLACE HMA (TYPE A)

LOCATION (PM)	DIRECTION	LANE No.	COLD PLANE AC PAVEMENT (0.35' Max) LENGTH	WIDTH	AREA	PAVING MAT	HOT MIX ASPHALT (TYPE A)	TACK COAT
			LF(N)		SQYD		TON	
12.00 TO 13.38	SB	4	60	6	40.00		9.45	0.02
			50	12	66.67		15.75	0.03
			120	12	160.00		37.80	0.07
13.32 TO 13.38	SB	3 & 4	300	24	800.00	800.00	189.00	1.02
13.38 TO 13.52	SB	1, 2, 3, & 4	800	48	4266.67	4266.67	720.00	5.45
		OUTSIDE SHOULDER	800	10	888.89	888.89	150.00	1.13
		INSIDE SHOULDER	800	5	444.44	444.44	75.00	0.57
12.00 TO 13.38	NB	2	100	18	200.00		47.25	0.09
		2	50	12	66.67		15.75	0.03
		4 & 5	2540	6	1693.33	1693.33	400.05	2.16
		2	30	12	40.00		9.45	0.02
		1&2	300	6	200.00	200.00	47.25	0.26
		1 & 2	200	6	133.33		31.50	0.06
		4 & AUX LANE	500	6	333.33	333.33	78.75	0.43
		1 & 2	50	6	33.33		7.88	0.01
		2 & 3	160	6	106.67		25.20	0.05
		3	50	6	33.33		7.88	0.01
		1	300	12	400.00		94.50	0.17
		4 & AUX LANE	150	6	100.00		23.63	0.04
		3	10	12	13.33		3.15	0.01
		3	20	12	26.67		6.30	0.01
		2	30	12	40.00		9.45	0.02
		1 & 2	100	6	66.67		15.75	0.03
13.38 TO 13.42	NB	1 & 2	150	26	433.33	433	102.38	0.55
		1, 2, 3, & 4	100	50	555.56	556	131.25	0.71
SUBTOTAL					11142.22	9615.56	2254.35	12.92

(N) NOT A SEPARATE PAY ITEM. FOR INFORMATION ONLY.

SUMMARY OF QUANTITIES

Q-4

STATE OF CALIFORNIA - DEPARTMENT OF TRANSPORTATION
Caltrans DESIGN

FUNCTIONAL SUPERVISOR: RONNIE CHUA
CALCULATED-DESIGNED BY: MUSTAQUR RAHMAN
CHECKED BY: RONNIE CHUA
REVISED BY
DATE REVISED

LAST REVISION 12-14-11
DATE PLOTTED => 01-FEB-2012
TIME PLOTTED => 09:11

Dist	COUNTY	ROUTE	POST MILES TOTAL PROJECT	SHEET No.	TOTAL SHEETS
04	SM	101	12.0/13.5	34	56

REGISTERED CIVIL ENGINEER 1-10-12 DATE

1-23-12
PLANS APPROVAL DATE

REGISTERED PROFESSIONAL ENGINEER Md Mustaqur Rahman No. 75824 Exp. 6-30-12 CIVIL STATE OF CALIFORNIA

THE STATE OF CALIFORNIA OR ITS OFFICERS OR AGENTS SHALL NOT BE RESPONSIBLE FOR THE ACCURACY OR COMPLETENESS OF SCANNED COPIES OF THIS PLAN SHEET.

ROADWAY QUANTITIES (RAMP)
COLD PLANE AC PAVEMENT (0.35' MAX) AND PLACE HMA (TYPE A)

LOCATION (PM)	DIRECTION	NAME OF RAMP	COLD PLANE AC PAVEMENT (0.35' MAX) LENGTH	WIDTH	AREA	HOT MIX ASPHALT (TYPE A)	TACK COAT
			LF(N)		SQYD	TON	
12.034	NB	NB ON-RAMP FROM FASHION ISLAND Blvd	30	12	40.00	9.45	0.02
			30	12	40.00	9.45	0.02
12.108	SB	SEG SB OFF-RAMP TO FASHION ISLAND Blvd	400	10	444.00	105.00	0.19
			200	12	267.00	63.00	0.11
			60	24	160.00	37.80	0.07
12.325	SB	SB OFF-RAMP TO ROUTE 92	20	24	53.00	12.60	0.02
			300	12	400.00	94.50	0.17
			50	12	67.00	15.75	0.03
			300	22	733.33	173.25	0.31
			150	22	366.67	86.63	0.16
13.531	SB	SEG SB OFF-RAMP TO EB EAST 4TH AVENUE	50	12	66.67	15.75	0.03
13.361	SB	SEG SB ON-RAMP FROM WB EAST 3RD AVENUE	80	12	106.67	25.20	0.05
13.384	NB	SEG NB OFF-RAMP TO WB EAST 3RD AVENUE	40	12	53.33	12.60	0.02
13.361	SB	SEG SB ON-RAMP FROM EAST 4TH Ave	30	6	20.00	4.73	0.01
SUBTOTAL					2817.78	665.71	1.20

(N) NOT A SEPARATE PAY ITEM. FOR INFORMATION ONLY.

SUMMARY OF ROADWAY QUANTITIES

DESCRIPTION	COLD PLANE AC PAVEMENT (0.10' Max)	(0.35' Max)	PAVING MATS	HOT MIX ASPHALT (TYPE A)	HOT MIX ASPHALT (BONDED WEARING COARSE-GAP GRADED)	ASPHALTIC EMULSION MEMBRANE (BWC)	TACK COAT	SHOULDER BACKING	INDIVIDUAL SLAB REPLACEMENT (RSC)	GRIND EXISTING CONCRETE PAVEMENT	CRACK TREATMENT
	SQYD			TON					CY	SQYD	LNMI
SUBTOTAL SHEET Q-1 ROADWAY QUANTITIES (MAINLINE)	9706				6799.59	85.73					5
SUBTOTAL SHEET Q-1 ROADWAY QUANTITIES (SHOULDER)	11323				2551.03	32.16					
SUBTOTAL SHEET Q-1 IMPORTED MATERIALS (SHOULDER BACKING)								425			
SUBTOTAL SHEET Q-2 ROADWAY QUANTITIES (RAMP)	20189				3641.63	45.91					
SUBTOTAL SHEET Q-2 REPLACE CONCRETE PAVEMENT (RAPID STRENGTH CONCRETE)									526.47	2520	
SUBTOTAL SHEET Q-3 COLD PLANE AC PAVEMENT (0.35' Max) AND PLACE HMA (TYPE A) ON MAINLINE		3746.67	1666.67	885.15			3.01				
SUBTOTAL SHEET Q-4 COLD PLANE AC PAVEMENT (0.35' Max) AND PLACE HMA (TYPE A) ON MAINLINE		11142.22	9615.56	2254.35			12.92				
SUBTOTAL SHEET Q-5 COLD PLANE AC PAVEMENT (0.35' Max) AND PLACE HMA (TYPE A) ON RAMPS		2817.78		665.71			1.20				
TOTAL	41218	17706.67	11282.23	3805.21	12992.25	163.80	17.13	425	526.47	2520	5
GRAND TOTAL	58925		11282.23	3805.21	12992.25	163.80	17.13	425	526.47	2520	5

SUMMARY OF QUANTITIES

Q-5

REVISED BY | DATE REVISED
MUSTAQUR RAHMAN | RONNIE CHUA
CALCULATED-DESIGNED BY | CHECKED BY
FUNCTIONAL SUPERVISOR: RONNIE CHUA
STATE OF CALIFORNIA - DEPARTMENT OF TRANSPORTATION
Caltrans
DESIGN

LAST REVISION 12-14-11
DATE PLOTTED => 01-FEB-2012
TIME PLOTTED => 09:11

Dist	COUNTY	ROUTE	POST MILES TOTAL PROJECT	SHEET No.	TOTAL SHEETS
04	SM	101	12.0/13.5	35	56

REGISTERED ELECTRICAL ENGINEER 1-10-12 DATE

1-23-12
PLANS APPROVAL DATE

REGISTERED PROFESSIONAL ENGINEER
R.M. Taitano Loughran
No. 16344
Exp. 3-31-13
ELECT
STATE OF CALIFORNIA

THE STATE OF CALIFORNIA OR ITS OFFICERS OR AGENTS SHALL NOT BE RESPONSIBLE FOR THE ACCURACY OR COMPLETENESS OF SCANNED COPIES OF THIS PLAN SHEET.

GENERAL NOTES:

1. NO ABOVE GROUND ELECTRICAL WORK SHALL BE PERFORMED ON ANY SYSTEM WITHIN THE PROJECT SITE UNTIL ALL CONTRACTOR-FURNISHED ELECTRICAL MATERIALS FOR THAT INDIVIDUAL SYSTEM HAVE BEEN TESTED AND DELIVERED TO CONTRACTOR.
2. ABANDON EXISTING LOOPS IN PLACE WHEN CUTTING NEW REPLACEMENT LOOPS. SPLICE NEW DETECTOR CONDUCTORS TO CORRESPONDING dlc IN TERMINATION PULL BOX. VERIFY IDENTIFICATION OF dlc BEFORE CONNECTING TO THE CORRESPONDING LOOP DETECTORS.
3. WHERE ONE OR MORE TRAFFIC SIGNAL DETECTOR(S) CONSIST OF A SEQUENCE OF 4 LOOPS IN A SINGLE LANE, THE FRONT LOOP CLOSEST TO THE LIMIT LINE OR CROSSWALK SHALL BE LOCATED 1 FOOT FROM THE LINE. THE SET OF 3 LOOPS OR 4 LOOPS ASSIGNED TO THE SAME LOOP DETECTOR LEAD-IN CABLE (DLC) SHALL BE CONNECTED IN SERIES FOR TRAFFIC SIGNAL SYSTEM ONLY AND NOT FOR RAMP METERING SYSTEM.
4. THE CONTRACTOR SHALL VERIFY THE LOCATION OF THE LOOP DETECTORS TO BE REPLACED PRIOR TO REPAVING.
5. ALL LOOP DETECTORS AT EACH TRAFFIC SIGNAL LOCATION SHALL BE REPLACED AND TESTED WITHIN THE TIME ALLOTTED FOR TRAFFIC SIGNAL SYSTEM SHUTDOWN AT THAT LOCATION.
6. THE CONTRACTOR SHALL PROVIDE TWO REPORTS PER LOCATION ON THE STATUS OF EACH DETECTOR LOOP REPLACEMENT SHOWING CONTINUITY AND INSULATION RESISTANCE READINGS. THE REPORTS SHALL BE SUBMITTED TO THE ENGINEER, ONE BEFORE STARTING WORK AND THE OTHER AFTER WORK HAS BEEN COMPLETED AT EACH LOCATION.
7. INSTALL LOCKING GRADE RING FOR EXISTING DETECTOR HANDHOLE AS NEEDED.
8. AT LEAST THREE WORKING DAYS, PRIOR TO PERFORMING ANY WORK OR EACH EXISTING SYSTEM THE CONTRACTOR SHALL NOTIFY THE DEPARTMENT OF TRANSPORTATION ELECTRICAL AND SIGNAL MAINTENANCE SUPERINTENDENT. PHONE (415) 330-6500
9. ALL EXISTING AND OPERATIONAL TRAFFIC OPERATION SYSTEM AND RAMP METERING ELEMENTS MUST BE KEPT OPERATIONAL THROUGHOUT THE CONSTRUCTION PHASE.

ABBREVIATIONS:

WMVDS	WIRELESS MAGNETOMETER VEHICLE DETECTION STATION
VSN	VEHICLE SENSOR NODE
AP	ACCESS POINT

ELECTRICAL INDEX

E-1	ELECTRICAL INDEX AND NOTES
E-2 TO E-4	REPLACE INDUCTIVE LOOP DETECTOR
E-5	ELECTRICAL DETAILS
E-6	REPLACE VEHICLE SENSOR NODE
E-7	REPLACE VEHICLE SENSOR NODE (ELECTRICAL DETAILS)

PROJECT NOTES:

1. RAISE DETECTOR HANDHOLE TO GRADE
2. PULL BOX REPLACEMENT SHALL BE AT THE EXACT LOCATION OF THE EXISTING DETECTOR TERMINATION PULL BOX
3. REMOVE EXISTING VEHICLE SENSOR NODE WHEN INSTALLING NEW VEHICLE SENSOR NODE AS SHOWN ON SHEET E-6. FOR INSTALLATION DETAILS, SEE SHEET E-7

APPROVED FOR ELECTRICAL WORK ONLY

ELECTRICAL NOTES AND INDEX

NO SCALE

E-1

STATE OF CALIFORNIA - DEPARTMENT OF TRANSPORTATION
Caltrans
ELECTRICAL

FUNCTIONAL SUPERVISOR: KENNETH Y. XU
CALCULATED-DESIGNED BY: RAMONA TAITANO-LOUGHRAN
CHECKED BY: KENNETH Y. XU
REVISED BY
DATE REVISED

LAST REVISION 01-06-12
DATE PLOTTED => 01-FEB-2012
TIME PLOTTED => 09:11

Dist	COUNTY	ROUTE	POST MILES TOTAL PROJECT	SHEET No.	TOTAL SHEETS
04	SM	101	12.0/13.5	36	56

REGISTERED ELECTRICAL ENGINEER DATE 1-10-12

1-23-12
PLANS APPROVAL DATE

REGISTERED PROFESSIONAL ENGINEER
R.M. Taitano Loughran
No. 16344
Exp. 3-31-13
ELECT
STATE OF CALIFORNIA

THE STATE OF CALIFORNIA OR ITS OFFICERS OR AGENTS SHALL NOT BE RESPONSIBLE FOR THE ACCURACY OR COMPLETENESS OF SCANNED COPIES OF THIS PLAN SHEET.

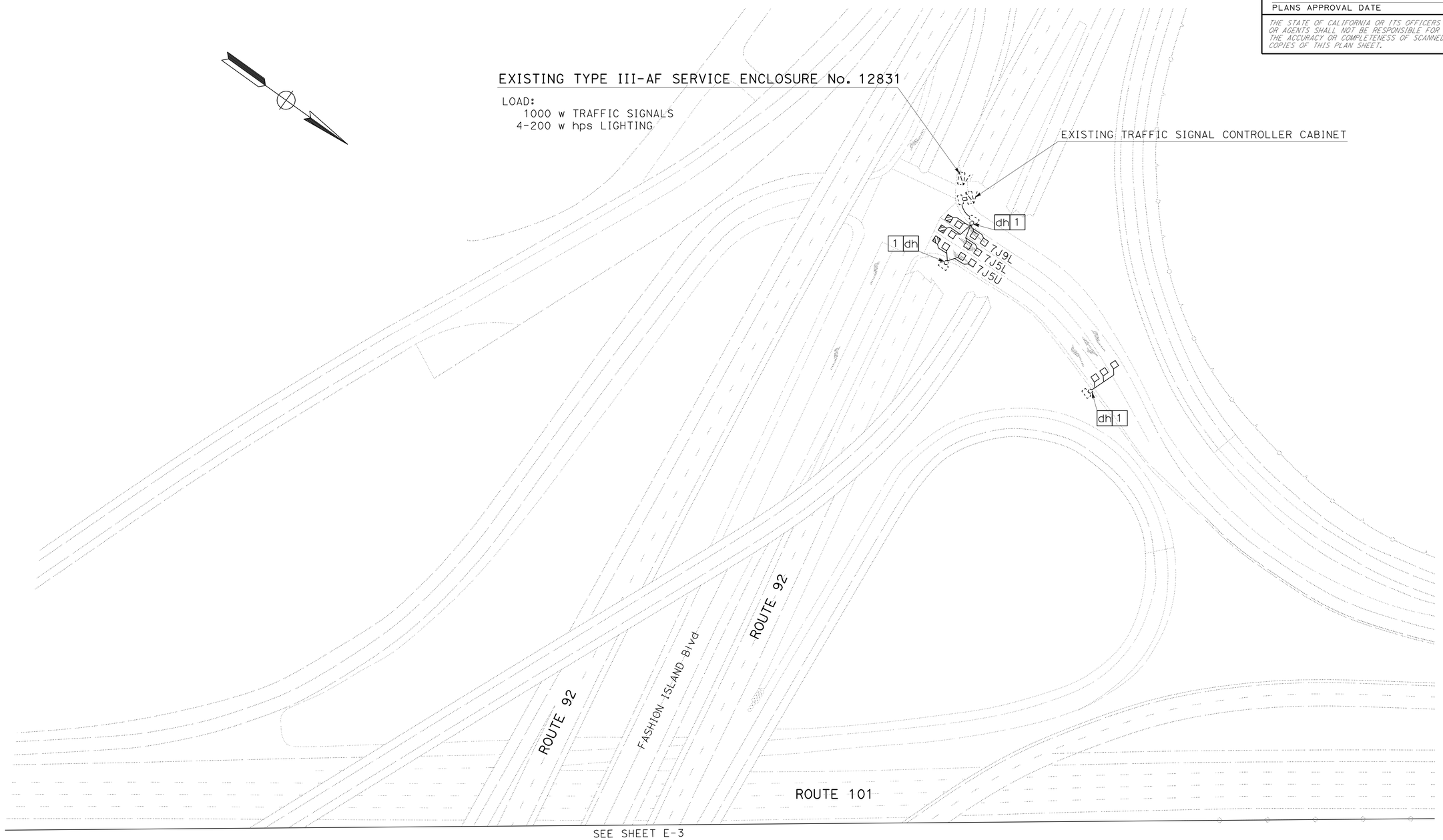

REPLACE INDUCTIVE LOOP DETECTOR

SCALE: 1" = 50'

APPROVED FOR ELECTRICAL WORK ONLY

FOR NOTES, ABBREVIATIONS AND LEGEND, SEE SHEET E-1

E-2

STATE OF CALIFORNIA - DEPARTMENT OF TRANSPORTATION
Caltrans
ELECTRICAL

FUNCTIONAL SUPERVISOR: KENNETH Y. XU

CALCULATED-DESIGNED BY: RAMONA TAITANO-LOUGHRAN
CHECKED BY: KENNETH Y. XU

REVISED BY
DATE REVISED

LAST REVISION 01-06-12
DATE PLOTTED => 01-FEB-2012
TIME PLOTTED => 09:11

Dist	COUNTY	ROUTE	POST MILES TOTAL PROJECT	SHEET No.	TOTAL SHEETS
04	SM	101	12.0/13.5	37	56

Ramona M Taitano Loughran 1-10-12
REGISTERED ELECTRICAL ENGINEER DATE

1-23-12
PLANS APPROVAL DATE

REGISTERED PROFESSIONAL ENGINEER
R.M. Taitano Loughran
No. 16344
Exp. 3-31-13
ELECT
STATE OF CALIFORNIA

THE STATE OF CALIFORNIA OR ITS OFFICERS OR AGENTS SHALL NOT BE RESPONSIBLE FOR THE ACCURACY OR COMPLETENESS OF SCANNED COPIES OF THIS PLAN SHEET.

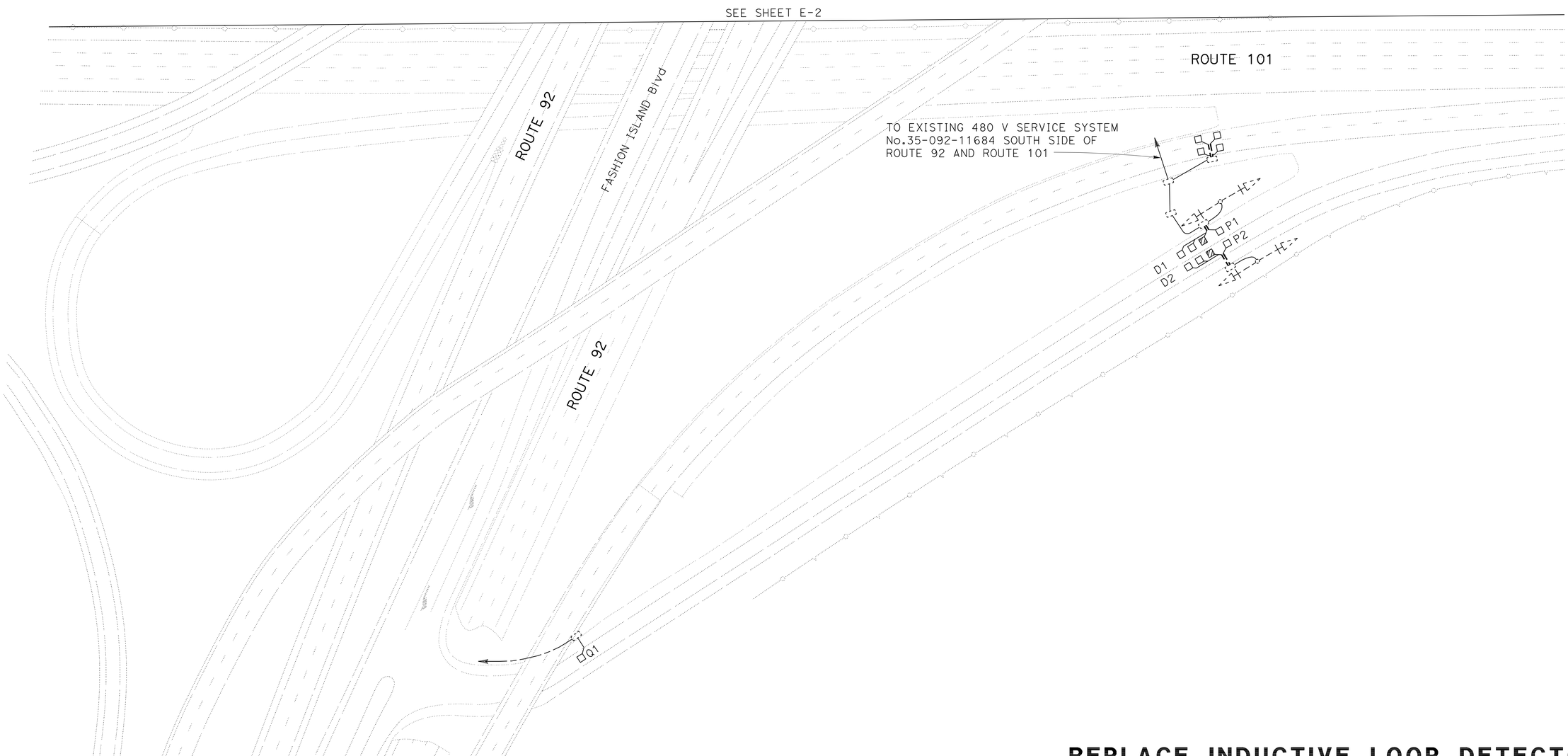

REPLACE INDUCTIVE LOOP DETECTOR

SCALE: 1" = 50'

APPROVED FOR ELECTRICAL WORK ONLY

FOR NOTES, ABBREVIATIONS AND LEGEND, SEE SHEET E-1

E-3

STATE OF CALIFORNIA - DEPARTMENT OF TRANSPORTATION
Caltrans
ELECTRICAL

FUNCTIONAL SUPERVISOR: KENNETH Y. XU

CALCULATED-DESIGNED BY: RAMONA TAITANO-LOUGHRAN
CHECKED BY: KENNETH Y. XU

REVISED BY
DATE REVISED

LAST REVISION 01-06-12
DATE PLOTTED => 01-FEB-2012
TIME PLOTTED => 09:11

Dist	COUNTY	ROUTE	POST MILES TOTAL PROJECT	SHEET No.	TOTAL SHEETS
04	SM	101	12.0/13.5	38	56

REGISTERED ELECTRICAL ENGINEER DATE 1-10-12

1-23-12
PLANS APPROVAL DATE

REGISTERED PROFESSIONAL ENGINEER R.M. Taitano Loughran No. 16344 Exp. 3-31-13 ELECT STATE OF CALIFORNIA

THE STATE OF CALIFORNIA OR ITS OFFICERS OR AGENTS SHALL NOT BE RESPONSIBLE FOR THE ACCURACY OR COMPLETENESS OF SCANNED COPIES OF THIS PLAN SHEET.

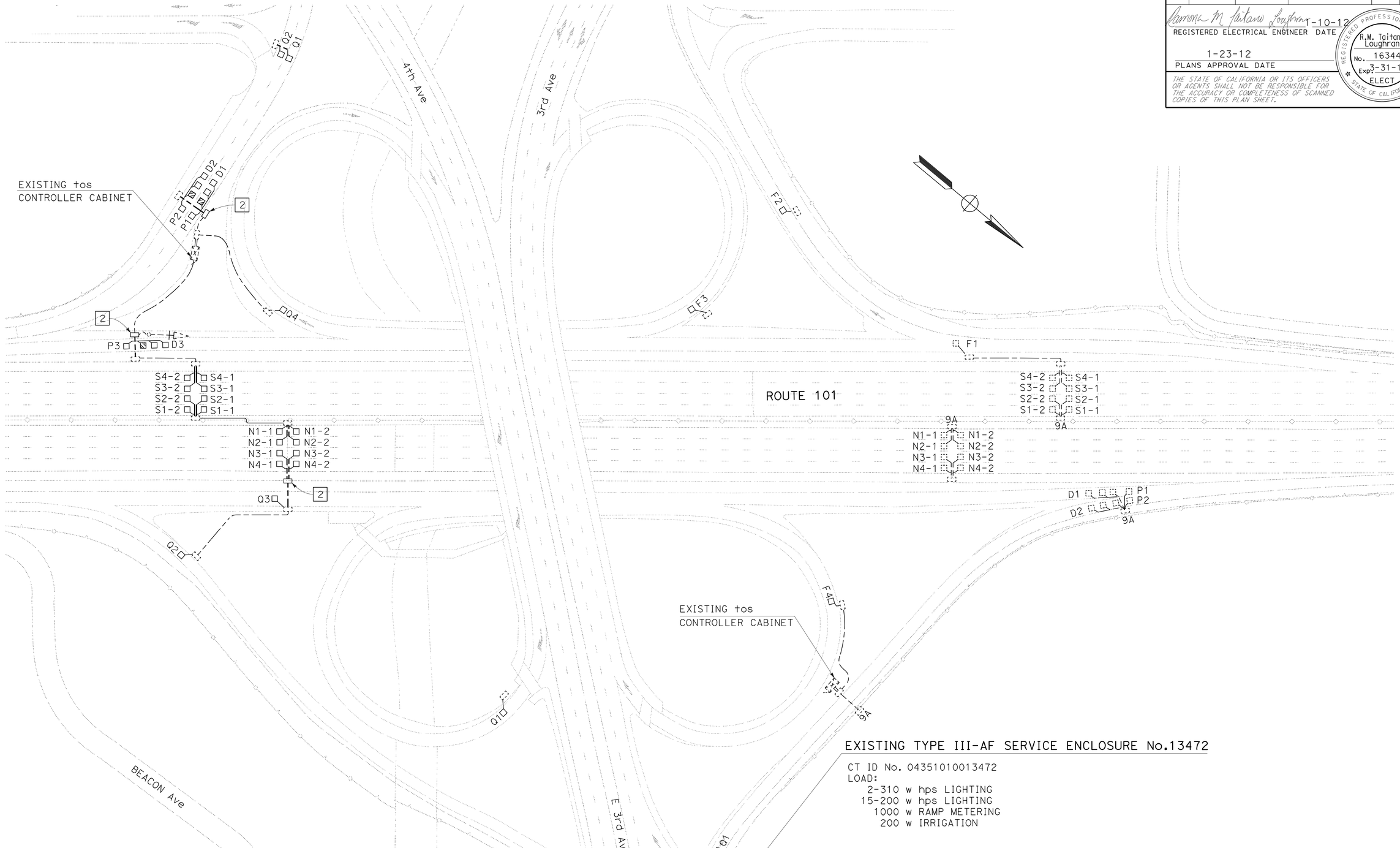

EXISTING TYPE III-AF SERVICE ENCLOSURE No.13472

CT ID No. 04351010013472
LOAD:
2-310 w hps LIGHTING
15-200 w hps LIGHTING
1000 w RAMP METERING
200 w IRRIGATION

REPLACE INDUCTIVE LOOP DETECTOR

SCALE: 1" = 50'

APPROVED FOR ELECTRICAL WORK ONLY

FOR NOTES, ABBREVIATIONS AND LEGEND, SEE SHEET E-1

E-4

STATE OF CALIFORNIA - DEPARTMENT OF TRANSPORTATION
Caltrans
ELECTRICAL

FUNCTIONAL SUPERVISOR: KENNETH Y. XU
CALCULATED-DESIGNED BY: RAMONA TAITANO-LOUGHRAN
CHECKED BY: KENNETH Y. XU
REVISED BY
DATE REVISED

LAST REVISION 01-06-12
DATE PLOTTED => 01-FEB-2012
TIME PLOTTED => 09:11

Dist	COUNTY	ROUTE	POST MILES TOTAL PROJECT	SHEET No.	TOTAL SHEETS
04	SM	101	12.0/13.5	39	56

REGISTERED ELECTRICAL ENGINEER 1-10-12 DATE

1-23-12
PLANS APPROVAL DATE

REGISTERED PROFESSIONAL ENGINEER Ray C. Duschane No. 14758 Exp. 6-30-13 ELECT STATE OF CALIFORNIA

THE STATE OF CALIFORNIA OR ITS OFFICERS OR AGENTS SHALL NOT BE RESPONSIBLE FOR THE ACCURACY OR COMPLETENESS OF SCANNED COPIES OF THIS PLAN SHEET.

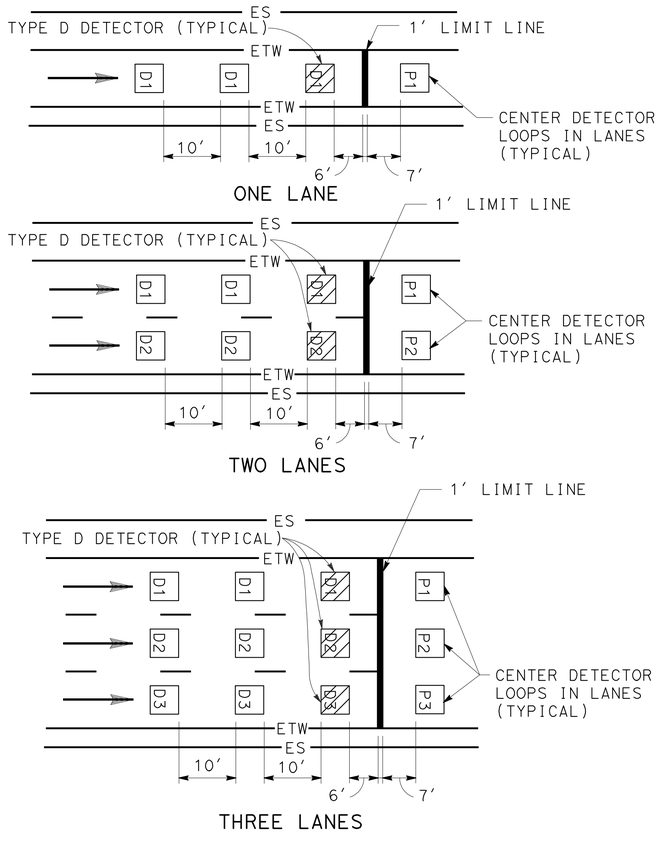

DETAIL "RM"
RAMP METERING STATION

RAMP METERING STATION NOTES:

1. SEE ES-5A, ES-5B, AND ES-13A FOR ADDITIONAL DETAILS.
2. DLC CONDUCTORS SHALL BE SPLICED TO THE LOOP CONDUCTORS IN THE NEAREST PULLBOX.
3. ALL SPLICES SHALL BE TYPE "S" OR TYPE "ST" AS REQUIRED.

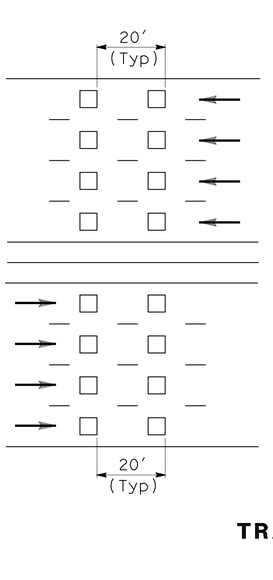

TRAFFIC MONITORING STATION NOTES

FREEWAY MAINLINE DETECTOR DESIGNATION:

N=NORTHBOUND LANES (NB)
S=SOUTHBOUND LANES (SB)
E=EASTBOUND LANES (EB)
W=WESTBOUND LANES (WB)

NUMBER OF LANES FROM LEFT WITH RESPECT TO DIRECTION OF TRAFFIC:

1=FIRST LANE FROM LEFT
2=SECOND LANE FROM LEFT
3=THIRD LANE FROM LEFT
4=FOURTH LANE FROM LEFT

NUMBER OF DETECTOR IN THE SAME LANE:

1=ENTERING DETECTOR
2=LEAVING DETECTOR

N 3-2

DETAIL "TM"
TRAFFIC MONITORING STATION

RAMP DETECTOR DESIGNATION:

D=DEMAND DETECTOR
P=PASSAGE DETECTOR
Q=QUEUE DETECTOR
F=OFFRAMP DETECTOR

1=FIRST LANE FROM LEFT
2=SECOND LANE FROM LEFT

D-2

APPROVED FOR ELECTRICAL WORK ONLY

ELECTRICAL DETAILS (RAMP METERING AND TRAFFIC MONITORING DETECTOR SPACING AND DESIGNATION)

NO SCALE

E-5

STATE OF CALIFORNIA - DEPARTMENT OF TRANSPORTATION
Caltrans
ELECTRICAL

FUNCTIONAL SUPERVISOR: CHARLES PRICE
CALCULATED-DESIGNED BY: RAY DUSCHANE
CHECKED BY: CHARLES PRICE
REVISED BY
DATE REVISED

LAST REVISION 01-06-12
DATE PLOTTED => 01-FEB-2012
TIME PLOTTED => 09:11

Dist	COUNTY	ROUTE	POST MILES TOTAL PROJECT	SHEET No.	TOTAL SHEETS
04	SM	101	12.0/13.5	40	56

REGISTERED ELECTRICAL ENGINEER DATE 1-10-12

1-23-12
PLANS APPROVAL DATE

REGISTERED PROFESSIONAL ENGINEER
R.M. Taitano Loughran
No. 16344
Exp. 3-31-13
ELECT
STATE OF CALIFORNIA

THE STATE OF CALIFORNIA OR ITS OFFICERS OR AGENTS SHALL NOT BE RESPONSIBLE FOR THE ACCURACY OR COMPLETENESS OF SCANNED COPIES OF THIS PLAN SHEET.

WMVDS VEHICLE SENSOR NODE QUANTITIES

LOCATION No.	APPROXIMATE LOCATION	DIRECTION	APPROXIMATE POST MILE	NUMBER OF LANES [N]		N	E	EQUIPMENT TO BE INSTALLED: VEHICLE SENSOR NODES		VSN CONFIGURATION TYPE OF DETAIL A IN SHEET E-6	VSN TALK TO AP OR REPEATER AT LOCATION NUMBER
				NB	SB	FT		NB	SB		
								EA			
1	31′ FROM ETW	SB	12.10	6	4	2029460	6040537	12	8	II	1
2	10′ FROM ETW	SB	12.60	5	4	2032169	6038573	10	8	II	2
3	31′ FROM ETW	NB	13.10	5		2033673	6037547	10		I	3
TOTAL								32	16		

FOR NOTES, ABBREVIATIONS AND LEGEND, SEE SHEET E-1

APPROVED FOR ELECTRICAL WORK ONLY

REPLACE VEHICLE SENSOR NODE
(VEHICLE SENSOR NODE QUANTITIES)

E-6

STATE OF CALIFORNIA - DEPARTMENT OF TRANSPORTATION
Caltrans
ELECTRICAL

FUNCTIONAL SUPERVISOR: KENNETH Y. XU
CALCULATED-DESIGNED BY: RAMONA TAITANO-LOUGHRAN
CHECKED BY: KENNETH Y. XU
REVISED BY
DATE REVISED

LAST REVISION 01-09-12
DATE PLOTTED => 01-FEB-2012
TIME PLOTTED => 09:11

Dist	COUNTY	ROUTE	POST MILES TOTAL PROJECT	SHEET No.	TOTAL SHEETS
04	SM	101	12.0/13.5	41	56

REGISTERED ELECTRICAL ENGINEER 1-10-12 DATE

1-23-12
PLANS APPROVAL DATE

REGISTERED PROFESSIONAL ENGINEER R.M. Taitano Loughran No. 16344 Exp. 3-31-13 ELECT STATE OF CALIFORNIA

THE STATE OF CALIFORNIA OR ITS OFFICERS OR AGENTS SHALL NOT BE RESPONSIBLE FOR THE ACCURACY OR COMPLETENESS OF SCANNED COPIES OF THIS PLAN SHEET.

VEHICLE SENSOR NODE INSTALLATION PROCEDURE:

1. PRIOR TO INSTALLATION, IDENTIFY VEHICLE SENSOR NODE'S ID, LANE NUMBER, AND LOCATION IN LANE.
2. MAKE SURE THE VEHICLE SENSOR NODE IS INSTALLED FLAT IN THE CORED HOLE AND IS NOT TILTED.
3. USE HEAT-GUN OR HOT COMPRESSED AIR TO DRY THE INSIDE OF THE CORED HOLE. THERE MUST BE ABSOLUTELY NO MOISTURE ON THE APPLIED SURFACE.
4. FILL THE HOLE ABOUT 1/4 FULL OF SEALANT.
5. PLACE VEHICLE SENSOR NODE IN THE HOLE WITH ARROW POINTING IN THE DIRECTION OF TRAFFIC. THE SEALANT SHOULD STILL HAVE WORK TIME, SO THE VEHICLE SENSOR NODE CAN BE ROTATED TO THE CORRECT ORIENTATION. PUSH VEHICLE SENSOR NODE DOWN SO IT LAYS FLAT ON THE BOTTOM OF THE HOLE.
6. FILL THE HOLE WITH THE REMAINING SEALANT TO COVER THE VEHICLE SENSOR NODE. LEVEL SEALANT WITH THE SURFACE OF ROAD.
7. IMMEDIATELY AFTER PROCEDURE #4, COMPLETE PROCEDURE #5 AND #6 WITHIN 30 SECONDS.
8. DEPENDING ON AMBIENT TEMPERATURE AND HUMIDITY, SEALANT DRYING TIME WILL VARY FROM 5 MINUTES TO 15 MINUTES. VERIFY HARDNESS OF SEALANT BEFORE REOPENING THE LANE FOR TRAFFIC.
9. RECORD DISTANCES BETWEEN EACH VEHICLE SENSOR NODE PAIR.

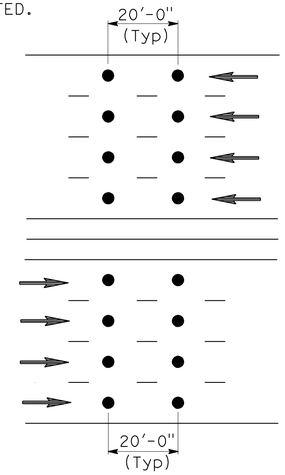

DETAIL "TM"

WMVDS NOTES

FREEWAY MAINLINE DETECTOR DESIGNATION:

N=NORTHBOUND LANES (NB)
S=SOUTHBOUND LANES (SB)
E=EASTBOUND LANES (EB)
W=WESTBOUND LANES (WB)

NUMBER OF LANES FROM LEFT WITH RESPECT TO DIRECTION OF TRAFFIC:

1=FIRST LANE FROM LEFT
2=SECOND LANE FROM LEFT
3=THIRD LANE FROM LEFT
4=FOURTH LANE FROM LEFT

NUMBER OF VSN IN THE SAME LANE:

1=ENTERING DETECTOR
2=LEAVING DETECTOR

N 3-2

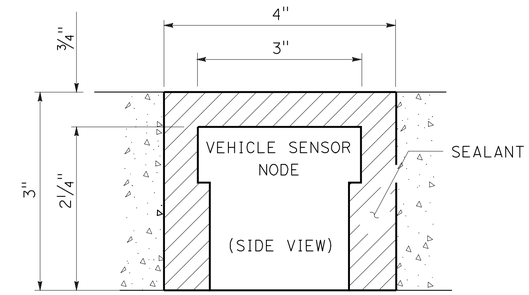

DETAIL B

VEHICLE SENSOR NODE INSTALLED IN ROADWAY

LEGEND:

DIRECTION OF TRAFFIC

WIRELESS COMMUNICATION LINK

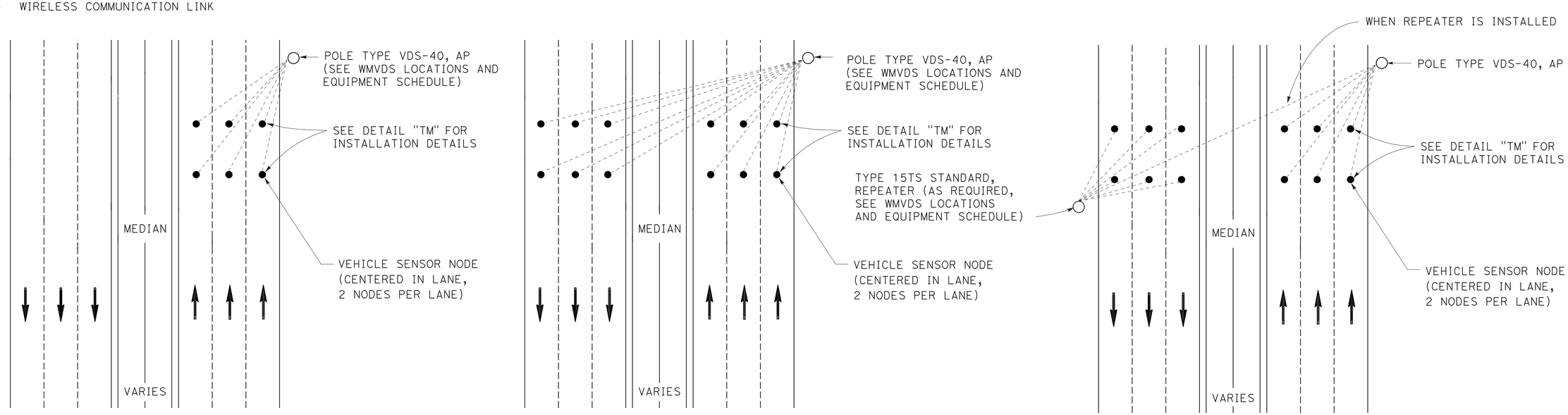

TYPE I **TYPE II** **TYPE III**

DETAIL A

VEHICLE SENSOR NODE PLACEMENT DETAIL

REPLACE VEHICLE SENSOR NODE (ELECTRICAL DETAILS)

NO SCALE

APPROVED FOR ELECTRICAL WORK ONLY

E-7

REVISED BY | DATE REVISED
RAMONA TAITANO-LOUGHRAN | KENNETH Y. XU
CALCULATED-DESIGNED BY | CHECKED BY
FUNCTIONAL SUPERVISOR: KENNETH Y. XU

STATE OF CALIFORNIA - DEPARTMENT OF TRANSPORTATION
Caltrans
ELECTRICAL

LAST REVISION 01-06-12 | DATE PLOTTED => 01-FEB-2012 | TIME PLOTTED => 09:11

DIST	COUNTY	ROUTE	POST MILES TOTAL PROJECT	SHEET NO.	TOTAL SHEETS
04	SM	101	12.0/13.5	42	56

REGISTERED ELECTRICAL ENGINEER

October 5, 2007
PLANS APPROVAL DATE

REGISTERED PROFESSIONAL ENGINEER Jeffery G. McRae No. E14512 Exp. 6-30-08 ELECTRICAL STATE OF CALIFORNIA

The State of California or its officers or agents shall not be responsible for the accuracy or completeness of electronic copies of this plan sheet.

To accompany plans dated 1-23-12

ELECTROLIERS

STANDARD TYPES
15, 15D
15 STRUCTURE
21, 21D STRUCTURE
30
31
32
35
36-20A

High mast light pole

Double Arm lighting standard

Existing electrolier

Electrolier foundation (Future installation)

NOTES:

1. Luminaires shall be 310 W HPS when installed on Type 21, 21D, 30, 31, 32, 35 and 36-20A Standards, unless otherwise specified. Luminaires shall be 200 W HPS when installed on other type standards or poles, unless otherwise specified.
2. Luminaires shall be the cutoff type, ANSI Type Ⅲ medium cutoff lighting distribution, unless otherwise specified.
3. Variations noted adjacent to symbol on project plans.

Electrolier (see project notes or project plans)

Luminaire on wood pole

STANDARD NOTES:

- AB — Abandon. If applied to conduit, remove conductors.
- BC — Install pull box in existing conduit run.
- BP — Pedestrian barricade, type as indicated on plan.
- CB — Install conduit into existing pull box.
- CC — Connect new and existing conduit. Remove existing conductors and install conductors as indicated.
- CF — Conduit to remain for future use. Remove conductors. Install pull wire or rope.
- DH — Detector handhole.
- FA — Foundation to be abandoned.
- IS — Install sign on signal mast arm.
- NS — No slip base on standard.
- PEC — Photoelectric control.
- PEU — Photoelectric unit.
- RC — Equipment or material to be removed and become the property of the Contractor.
- RE — Remove electrolier, fuses and ballast. Tape ends of conductors.
- RL — Relocate equipment.
- RR — Remove and reuse equipment.
- RS — Remove and salvage equipment.
- SC — Splice new to existing conductors.
- SD — Service disconnect.
- SF — Standard to remain for future use. Remove luminaire, pole conductors, fuses and ballast.
- TSP — Telephone service point.

ABBREVIATIONS AND EQUIPMENT DESIGNATIONS

PROPOSED	EXISTING	
BBS	bbs	Battery backup system
BC	bc	Bolt circle
C	C	Conduit
CCTV	cctv	Closed circuit television
CKT	ckt	Circuit
CMS	cms	Changeable message sign
DLC	dlc	Loop detector lead-in cable
EMS	ems	Extinguishable message sign
EVC	evc	Emergency vehicle cable
EVD	evd	Emergency vehicle detector
FB	fb	Flashing beacon
FBCA	fbca	Flashing beacon control assembly
FBS	fbs	Flashing beacon with slip base
FO	fo	Fiber optic
G	G	Ground (Equipment Grounding Conductor)
GFCI	GFCI	Ground fault circuit interrupt
HAR	har	Highway advisory radio
HEX	hex	Hexagonal
HPS	hps	High pressure sodium
IISNS	iisns	Internally illuminated street name sign
ISL	isl	Induction sign lighting
LED	led	Light emitting diode
LMA	lma	Luminaire mast arm
LPS	lps	Low pressure sodium
LTG	ltg	Lighting
LUM	lum	Luminaire
MAT	mat	Mast arm mounting vehicle signal faces, top attachment
MAS	mas	Mast arm mounting vehicle signal faces, side attachment
MAS-4A	mas-4A	Mast arm mounting vehicle signal faces, side attachment - 4 signal section
MAS-4B	mas-4B	
MAS-4C	mas-4C	
MAS-5A	mas-5A	Mast arm mounting vehicle signal faces, side attachment - 5 signal section
MAS-5B	mas-5B	
MC	mc	Mercury contactor
M/M	m/m	Multiple to multiple transformer
MT	mt	Conduit with pull wire or rope only
MTG	mtg	Mounting
	mv	Mercury vapor lighting fixture
N	N	Neutral (Grounded Conductor)
NC	NC	Normally closed
NO	NO	Normally open
PB	pb	Pull box
PEC	pec	Photoelectric control (Type Ⅰ, Ⅱ, Ⅲ, Ⅳ or Ⅴ as shown)
PED	ped	Pedestrian
PEU	peu	Photoelectric unit
PPB	ppb	Pedestrian push button
RL		Relocated equipment
RM	rm	Ramp metering
SB	sb	Slip base
SIC	sic	Signal interconnect cable
SIG	sig	Signal
SMA	sma	Signal mast arm
SNS	sns	Street name sign
SP	sp	Service point
TDC	tdc	Telephone demarcation cabinet
TMS	tms	Traffic monitoring station
TOS	tos	Traffic Operations System
VEH	veh	Vehicle
XFMR	xfmr	Transformer
COMM	comm	Communication
RWIS	rwis	Roadway weather information system

SOFFIT AND WALL MOUNTED LUMINAIRES

Pendant, 70 W HPS unless otherwise specified.

Flush, 70 W HPS unless otherwise specified.

Wall surface, 70 W HPS unless otherwise specified.

Existing soffit or wall luminaire to remain unmodified.

Existing soffit or wall luminaire to be modified as specified.

NOTE:

Arrow indicates "street side" of luminaire.

STATE OF CALIFORNIA
DEPARTMENT OF TRANSPORTATION

ELECTRICAL SYSTEMS (SYMBOLS AND ABBREVIATIONS)

NO SCALE

RSP ES-1A DATED OCTOBER 5, 2007 SUPERSEDES STANDARD PLAN ES-1A DATED MAY 1, 2006 - PAGE 400 OF THE STANDARD PLANS BOOK DATED MAY 2006.

REVISED STANDARD PLAN RSP ES-1A

2006 REVISED STANDARD PLAN RSP ES-1A

DIST	COUNTY	ROUTE	POST MILES TOTAL PROJECT	SHEET NO.	TOTAL SHEETS
04	SM	101	12.0/13.5	43	56

REGISTERED ELECTRICAL ENGINEER

October 5, 2007
PLANS APPROVAL DATE

REGISTERED PROFESSIONAL ENGINEER
Jeffery G. McRae
No. E14512
Exp. 6-30-08
ELECTRICAL
STATE OF CALIFORNIA

The State of California or its officers or agents shall not be responsible for the accuracy or completeness of electronic copies of this plan sheet.

To accompany plans dated 1-23-12

2006 REVISED STANDARD PLAN RSP ES-5A

LOOP INSTALLATION PROCEDURE

1. Loops shall be centered in lanes.
2. Saw slots in pavement for loop conductors as shown in details.
3. Distance between side of loop and a lead-in saw cut from adjacent detectors shall be 2'-0" minimum. Distance between lead-in saw cuts shall be 6" minimum.
4. Bottom of saw slot shall be smooth with no sharp edges.
5. Slots shall be washed until clean, blown out and thoroughly dried before installing loop conductors.
6. Adjacent loops on the same sensor unit channel shall be wound in opposite directions.
7. Identify and tag loop circuit pairs in the pull box with loop number, start (S) and finish (F) of conductor. Identify and tag lead-in-cable with sensor number and phase.
8. Install loop conductor in slot using a 3/16" to 1/4" thick wood paddle. Hold loop conductors with wood paddles (at the bottom of the sawed slot) during sealant placement.
9. No more than 2 twisted pairs shall be installed in one sawed slot.
10. Allow additional 5'-0" of slack length of conductor for the lead-in run to pull box.
11. The additional length of each conductor for each loop shall be twisted together into a pair (6 turns per 3'-4" minimum) before being placed in the slot and conduit leading to pull box.
12. Test each loop circuit for continuity, circuit resistance and insulation resistance at the pull box before filling slots.
13. Fill slots as shown in details.
14. Splice loop conductors to lead-in-cable. Splices shall be soldered.
15. End of lead-in-cable and Type 2 loop conductor shall be waterproofed prior to installing in conduit to prevent moisture from entering the cable.
16. Lead-in-cable shall not be spliced between the pull box and the controller cabinet terminals.
17. Test each loop circuit for continuity, circuit resistance and insulation resistance at the controller cabinet location.
18. Where loop conductors are not to be spliced to a lead-in-cable, the ends of the conductors shall be taped and waterproofed with electrical insulating coating.

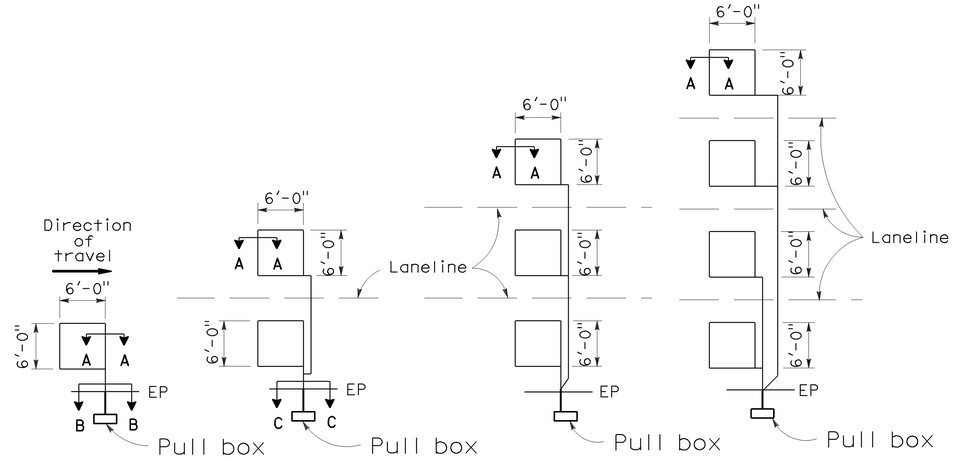

TYPE 1A INSTALLATION | TYPE 2A INSTALLATION | TYPE 3A INSTALLATION | TYPE 4A INSTALLATION

SAWCUT DETAILS

(Type A loop detector configurations illustrated)

1. 1A thru 4A = 1 Type A loop configuration in each lane.
2. 1B thru 4B = 1 Type B loop configuration in each lane.
3. 1C = 1 Type C loop configuration entering lanes as required.
4. 1D thru 4D = 1 Type D loop configuration in each lane.
5. 1E thru 4E = 1 Type E loop configuration in each lane.
6. 1Q thru 4Q = 1 Type Q loop configuration in each lane. (Use Type A, B, C, D, E or Q loop detector configurations only when specified or shown on plans)

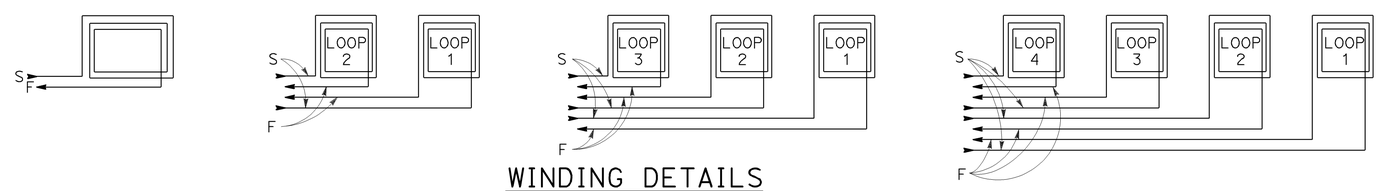

WINDING DETAILS

See Notes 6 and 7

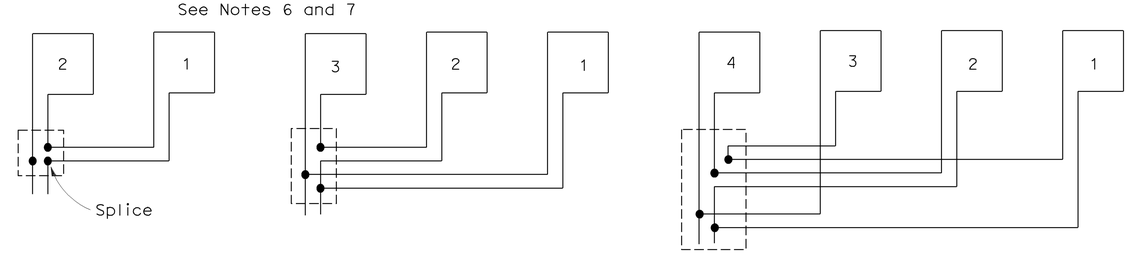

TYPICAL LOOP CONNECTIONS

(Dashed lines represent the pull box)

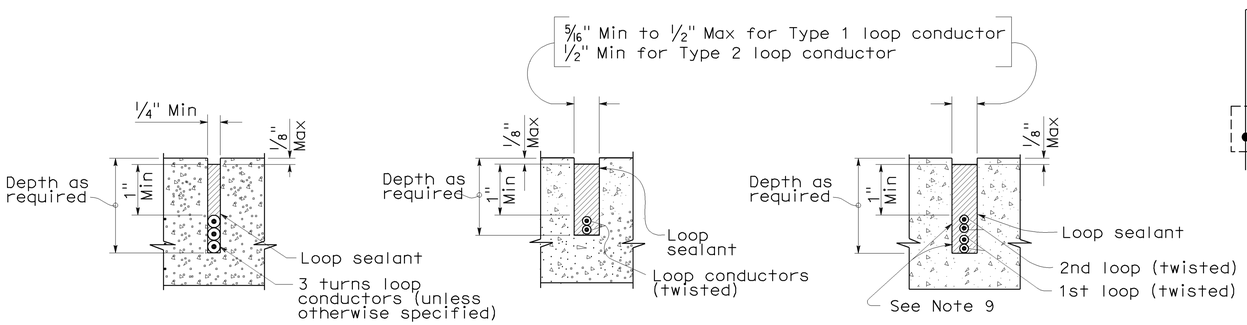

SECTION A-A | SECTION B-B | SECTION C-C

SLOT DETAILS - TYPE 1 AND TYPE 2 LOOP CONDUCTOR

STATE OF CALIFORNIA
DEPARTMENT OF TRANSPORTATION

ELECTRICAL SYSTEMS (DETECTORS)

NO SCALE

RSP ES-5A DATED OCTOBER 5, 2007 SUPERCEDES STANDARD PLAN ES-5A DATED MAY 1, 2006 - PAGE 423 OF THE STANDARD PLANS BOOK DATED MAY 2006.

REVISED STANDARD PLAN RSP ES-5A

DIST	COUNTY	ROUTE	POST MILES TOTAL PROJECT	SHEET NO.	TOTAL SHEETS
04	SM	101	12.0/13.5	44	56

REGISTERED ELECTRICAL ENGINEER

October 5, 2007
PLANS APPROVAL DATE

REGISTERED PROFESSIONAL ENGINEER Jeffery G. McRae No. E14512 Exp. 6-30-08 ELECTRICAL STATE OF CALIFORNIA

The State of California or its officers or agents shall not be responsible for the accuracy or completeness of electronic copies of this plan sheet.

To accompany plans dated 1-23-12

CONDUIT

PROPOSED	EXISTING	
		Lighting Conduit, unless otherwise indicated or noted
		Traffic signal conduit
C	c	Communication conduit
T	t	Telephone conduit
F	f	Fire alarm conduit
FO	fo	Fiber optic conduit
		Conduit termination (RSP ES-9A C)
R	r	Conduit riser in/on structure or service pole

SERVICE EQUIPMENT

PROPOSED	EXISTING	
OH	oh	Overhead lines
U	U	Wood pole "U" indicates utility owned
		Pole guy with anchor
		Utility transformer - ground mounted
III		Service equipment enclosure type
		Service equipment enclosure door indicates front of enclosure
T	t	Telephone demarcation cabinet

POLE-MOUNTED SERVICE DESIGNATION

Type of installation

TYPE H SERVICE - 28'-10" ← Pole height above grade

ILLUMINATED OVERHEAD SIGN

PROPOSED	EXISTING	
		Overhead sign - Single post
		Overhead sign - Two post
		Overhead sign - Mounted on structure
		Overhead sign with electrolier

SIGNAL EQUIPMENT

PROPOSED	EXISTING	
		Pedestrian signal face
		Pedestrian push button post
		Pedestrian barricade
		Vehicle signal face (with backplate, 3-Section: red, yellow and green)
		Vehicle signal face with angle visors
PV	PV	Modifications of basic symbols: "L" Indicates all non-arrow sections louvered "LG" Indicates louvered green section only "PV" indicates 12" programmed visibility sections "8" indicates all 8" sections (only when specified)
		Type 15TS and Vehicle signal face
		Vehicle signal face with red, yellow and green left arrow sections
		Vehicle signal face with red and yellow sections and up green arrow
		Vehicle signal face (5 Section) with red, yellow and green sections and yellow and green right arrows
		Type 1 Standard and attached vehicle signal faces
		Standard with signal mast arm only and attached vehicle signal faces and internally illuminated street name sign
		Type 33 Standard, Left-turn vehicle signal face and sign
		Standard with luminaire and signal mast arms and attached vehicle signal faces
		Cantilever flashing beacon Type 9 Frame, with a sign unless otherwise specified or indicated
		Type 15-FBS Standard with two vehicle signal face sections with lens, backplate and visor with a sign
R	Y	Flashing beacon. One vehicle signal face section with lens, backplate and visor. "R" indicates red indication, "Y" indicates yellow indication
		Controller assembly. Door indicates front of cabinet

SIGNAL EQUIPMENT Cont

PROPOSED	EXISTING	
		Guard post
		Type 1 Standard with "Meter On" sign
		Emergency Vehicle detector

NOTES:

1. All signal sections shall be 12" unless shown otherwise.
2. Signal heads shall be provided with backplates unless shown otherwise.
3. Signal indication shall be LED.

STATE OF CALIFORNIA
DEPARTMENT OF TRANSPORTATION

ELECTRICAL SYSTEMS (SYMBOLS AND ABBREVIATIONS)

NO SCALE

RSP ES-1B DATED OCTOBER 5, 2007 SUPERCEDES STANDARD PLAN ES-1B DATED MAY 1, 2006 - PAGE 401 OF THE STANDARD PLANS BOOK DATED MAY 2006.

REVISED STANDARD PLAN RSP ES-1B

2006 REVISED STANDARD PLAN RSP ES-1B

7-10-07

DIST	COUNTY	ROUTE	POST MILES TOTAL PROJECT	SHEET NO.	TOTAL SHEETS
04	SM	101	12.0/13.5	45	56

REGISTERED ELECTRICAL ENGINEER

October 5, 2007
PLANS APPROVAL DATE

REGISTERED PROFESSIONAL ENGINEER Jeffery G. McRae No. E14512 Exp. 6-30-08 ELECTRICAL STATE OF CALIFORNIA

The State of California or its officers or agents shall not be responsible for the accuracy or completeness of electronic copies of this plan sheet.

To accompany plans dated 1-23-12

EQUIPMENT IDENTIFICATION

ILLUMINATED SIGN IDENTIFICATION NUMBER:

Sign No. 12345 — Sign number - Place on post or structure

10 ISL SCI 1.0

- 1.0 — Transformer rating (kVA)
- SCI — Lighting control type
- ISL — Number and type of fixtures

Do NOT place on standard or structure

ELECTROLIER OR EQUIPMENT IDENTIFICATION NUMBER:

12345 - 15'-0"

- 15'-0" — Mast arm length, if shown. Do not place on standard or structure.
- 12345 — Equipment number - Place on standard or structure. Existing equipment numbers are shown in parenthesis

CONDUIT AND CONDUCTOR IDENTIFICATION:

1½"C, 2#10, 15#14, 2 DLC

- 2#10, 15#14, 2 DLC — Number and size of conductors and cables
- 1½"C — Size of conduit in inches

Ø1, Ø2, Ø2P, etc.	Traffic phase identification for signal faces, detectors and phase diagrams
1 2 3	Project note numbers
A B C	Equipment description, installation or item numbers
1 2 3	Conduit run numbers

SIGNAL AND LIGHTING STANDARD (TYPICAL DESIGNATION):

19A - 3 - 100

- 100 — Wind velocity = 100 mph
- 3 — Case 3 arm loading
- 19A — Standard type
- Standard Plan sheet number
- Detail number or letter

MISCELLANEOUS EQUIPMENT

PROPOSED	EXISTING	
CMS	cms	Changeable message sign
		Closed circuit television camera
		Highway advisory radio pole and antenna
EMS	ems	Extinguishable message sign
M V	m v	Detection device M = Microwave sensor V = Video image sensor

WIRING DIAGRAM LEGEND

P	Pole
CB	Circuit breaker
A	Ampere
V	Volt
M	Metered
UM	Unmetered
NB	Neutral bus
GB	Ground bus
G	Equipment grounding conductor
N	Grounded conductor (Neutral)

- External conductor
- Conductor or bus
- Tie point
- Contactor coil
- Contactor, Contact NO
- Terminal blocks
- Contactor, Contact NC
- Enclosure bond
- Grounding electrode
- Circuit breaker
- Receptacle

PULL BOXES

PROPOSED EXISTING

Pull box-No. 5 unless otherwise indicated or noted.

3 — 9A(21)

Pull box-Additional designations or descriptions

3 = No. 3½ pull box
5 = No. 5 pull box
6 = No. 6 pull box
7 = No. 7 (Ceiling pull box)
8 = No. 8 (Pendant soffit pull box)
9 = No. 9 pull box
9A = No. 9A pull box

(C) = Communications pull box
(E) = Pull box with extension
(S) = Sprinkler control pull box
(21) = Anchor bolts and conduit for future installation of Type 21 Standard
(T) = Traffic pull box

VEHICLE DETECTORS

5 J 9 U

- U = Upper, L = Lower
- Slot number in input file
- Input file (I or J)
- Phase

PROPOSED	EXISTING	
		Type A detector loop. Outline of sawcut shown.
		Type B detector loop. Outline of sawcut shown.
		Type C detector loop. Outline of sawcut shown.
		Type D detector loop. Outline of sawcut shown.
		Type E detector loop. Outline of sawcut shown.
		Type Q detector loop. Outline of sawcut shown.
		Magnetic detector
DH	dh	Detector handhole
		Microwave or video detection zone

STATE OF CALIFORNIA
DEPARTMENT OF TRANSPORTATION

ELECTRICAL SYSTEMS (SYMBOLS AND ABBREVIATIONS)

NO SCALE

RSP ES-1C DATED OCTOBER 5, 2007 SUPERCEDES STANDARD PLAN ES-1C DATED MAY 1, 2006 - PAGE 402 OF THE STANDARD PLANS BOOK DATED MAY 2006.

REVISED STANDARD PLAN RSP ES-1C

2006 REVISED STANDARD PLAN RSP ES-1C

7-10-07

DIST	COUNTY	ROUTE	POST MILES TOTAL PROJECT	SHEET NO.	TOTAL SHEETS
04	SM	101	12.0/13.5	46	56

REGISTERED CIVIL ENGINEER

May 15, 2009
PLANS APPROVAL DATE

REGISTERED PROFESSIONAL ENGINEER William K. Farnbach No. C49042 Exp. 9-30-10 CIVIL STATE OF CALIFORNIA

The State of California or its officers or agents shall not be responsible for the accuracy or completeness of electronic copies of this plan sheet.

To accompany plans dated 1-23-12

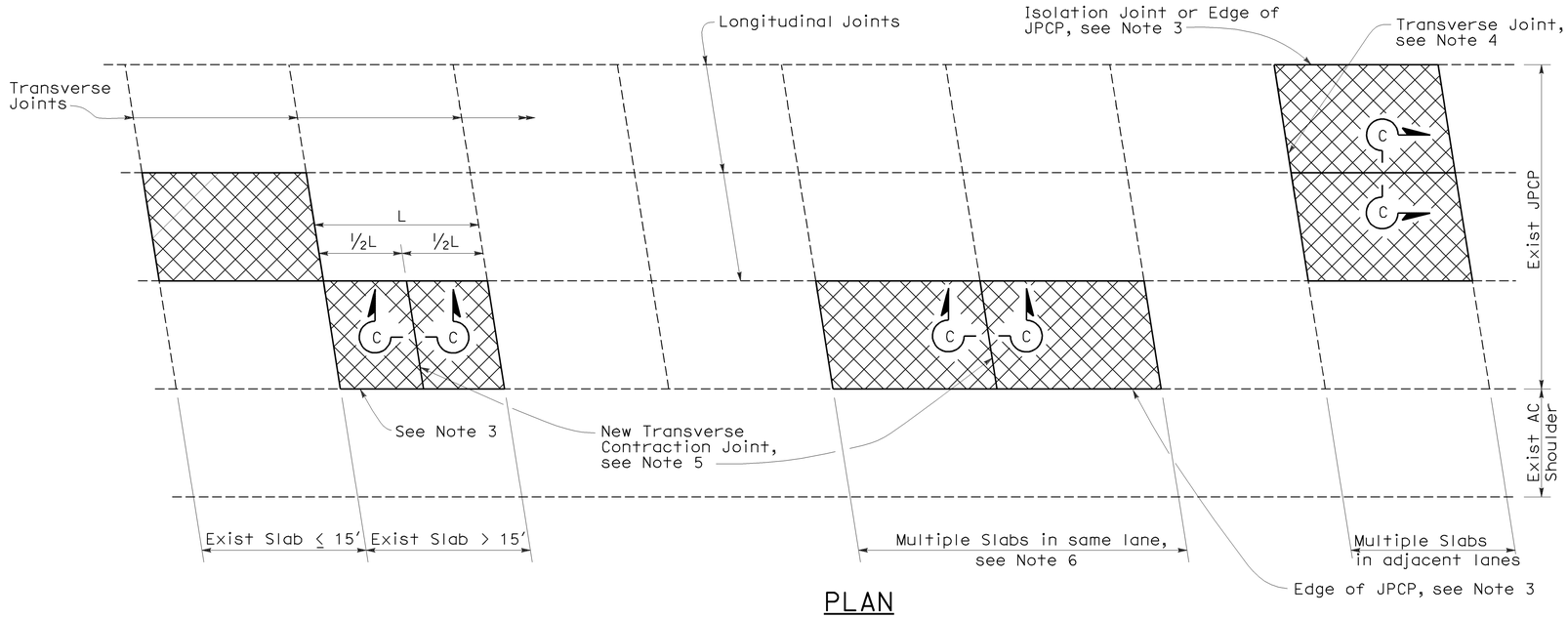

PLAN

NOTES:

1. For details not shown, see Revised Standard Plan RSP P10.
2. Where the existing outer shoulder pavement is asphalt concrete pavement, the "a" dimension shall be 1′-0" and the "b" dimension shall be 2′-0".
3. Side forms shall be used where edge of pavement is adjacent to asphalt concrete.
4. For detail, see Transverse Construction Joint for existing concrete pavement detail on Revised Standard Plan RSP P10.
5. Transverse joint to match skew of existing joint. Omit dowel bars.
6. This Standard Plan only applicable when replacing multiple slabs in the same lane is less than 100′.

LEGEND

Replace Concrete Pavement (See Slab Layout Detail)

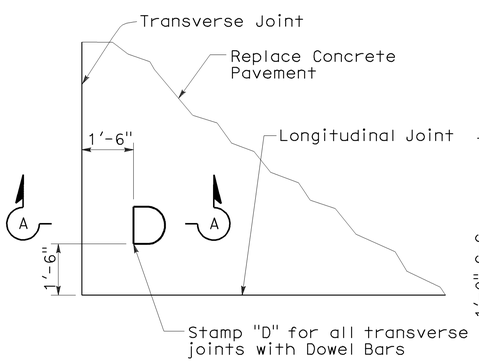

DOWEL STAMP DETAIL

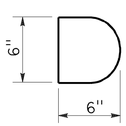

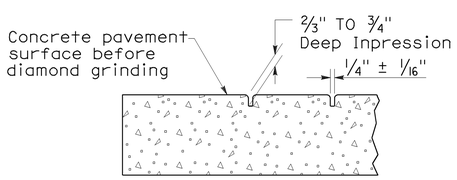

SECTION A-A

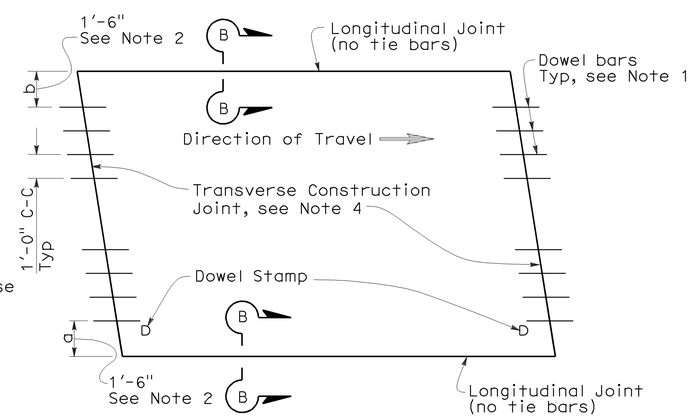

TYPE I
(traffic lane lines match longitudinal joints)

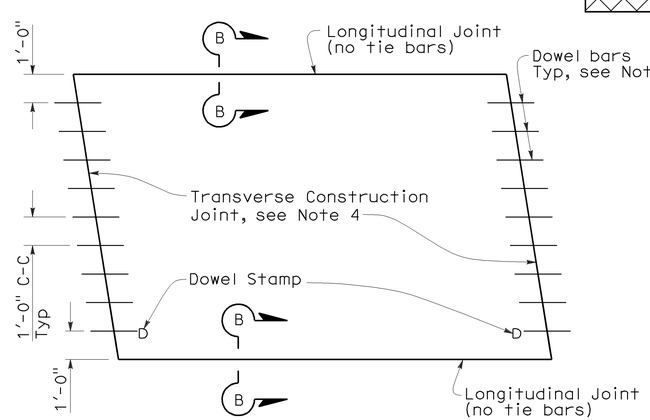

TYPE II
(traffic lane lines do not match longitudinal joints)

SLAB LAYOUT

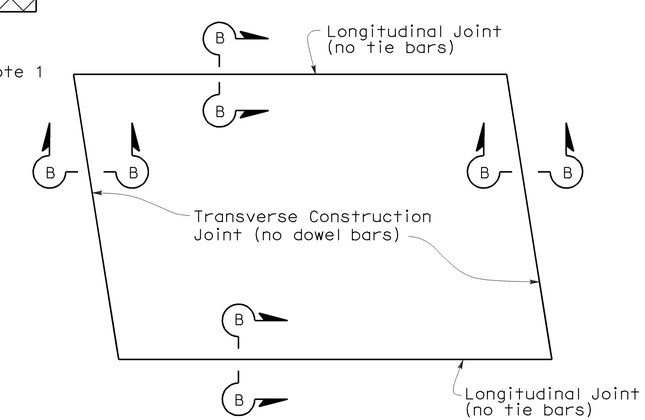

TYPE III
(for short term repairs < 5 yrs design life or for slab replacements with a cracking and seating operation)

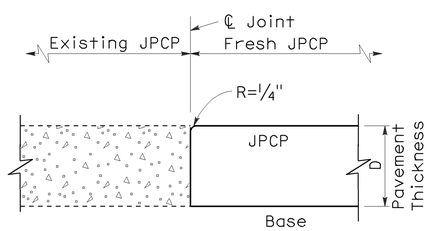

SECTION B-B

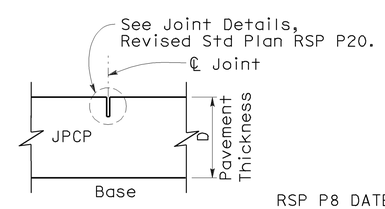

SECTION C-C

STATE OF CALIFORNIA
DEPARTMENT OF TRANSPORTATION

JOINTED PLAIN CONCRETE PAVEMENT-INDIVIDUAL SLAB REPLACEMENT

NO SCALE

RSP P8 DATED MAY 15, 2009 SUPERSEDES RSP P8 DATED SEPTEMBER 1, 2006 AND STANDARD PLAN P8 DATED MAY 1, 2006 - PAGE 123 OF THE STANDARD PLANS BOOK DATED MAY 2006.

REVISED STANDARD PLAN RSP P8

2006 REVISED STANDARD PLAN RSP P8

5-8-09

DIST	COUNTY	ROUTE	POST MILES TOTAL PROJECT	SHEET NO.	TOTAL SHEETS
04	SM	101	12.0/13.5	47	56

REGISTERED CIVIL ENGINEER

May 15, 2009
PLANS APPROVAL DATE

The State of California or its officers or agents shall not be responsible for the accuracy or completeness of electronic copies of this plan sheet.

REGISTERED PROFESSIONAL ENGINEER — William K. Farnbach — No. C49042 — Exp. 9-30-10 — CIVIL — STATE OF CALIFORNIA

To accompany plans dated 1-23-12

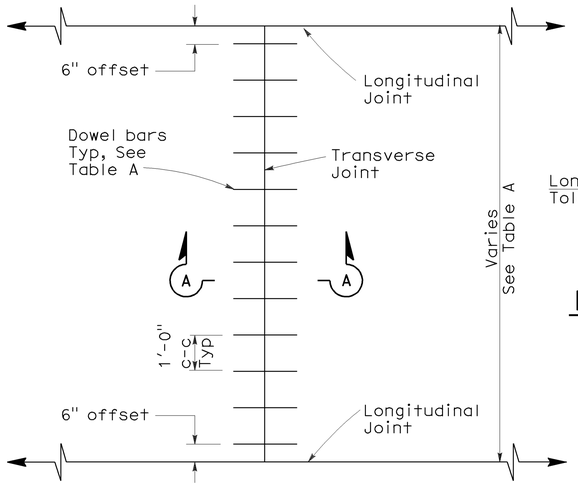

TRANSVERSE JOINT DOWEL BAR LAYOUT

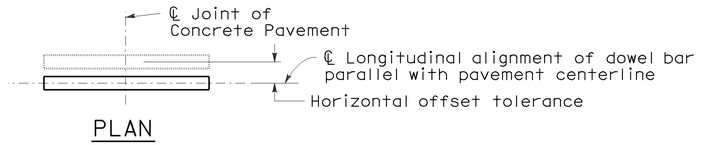

PLAN

HORIZONTAL OFFSET TOLERANCE

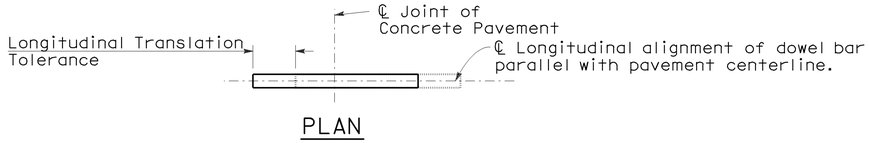

PLAN

LONGITUDINAL TRANSLATION TOLERANCE

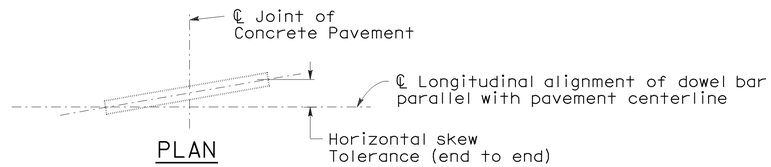

PLAN

HORIZONTAL SKEW TOLERANCE

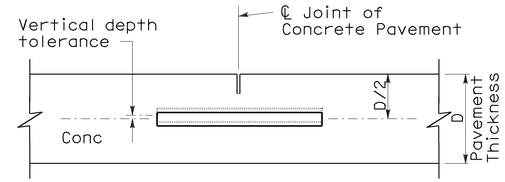

ELEVATION

VERTICAL DEPTH TOLERANCE

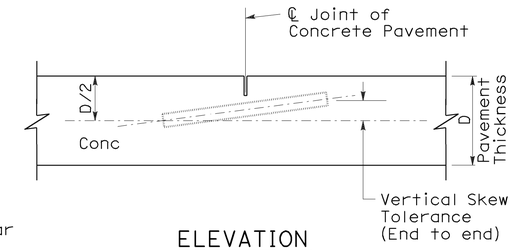

ELEVATION

VERTICAL SKEW TOLERANCE

NOTES:

1. See Revised Standard Plan RSP P1 for typical dowel bar placement and locations.
2. 1½" Dia smooth dowel bars are to be used with a pavement thickness, D, equal to or greater than 0.70 feet. For pavement thickness, D, less than 0.70 feet, use 1¼" Dia smooth dowel bars.
3. For widths not shown, see Project Plans.
4. If fresh concrete pavement is placed adjacent to existing concrete pavement, the top corner of the existing concrete pavement does not need to be rounded to the ¼" radius, as shown.

TABLE A (See Note 3)

Dowel Bar Transverse Spacing Table	
Width between Longitudinal Joints	Number of Dowels between Longitudinal Joints
14'-0"	14
13'-0"	13
12'-0"	12
11'-0"	11
10'-0"	10
8'-0"	8
5'-0"	5
4'-0"	4

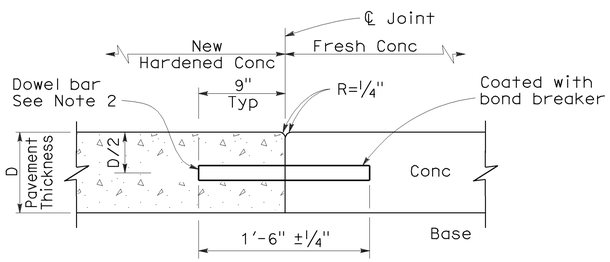

SECTION A-A

TRANSVERSE CONSTRUCTION JOINT DETAIL

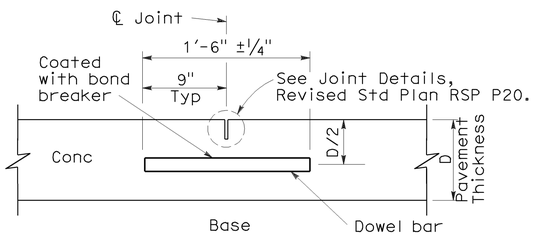

TRANSVERSE CONTRACTION JOINT

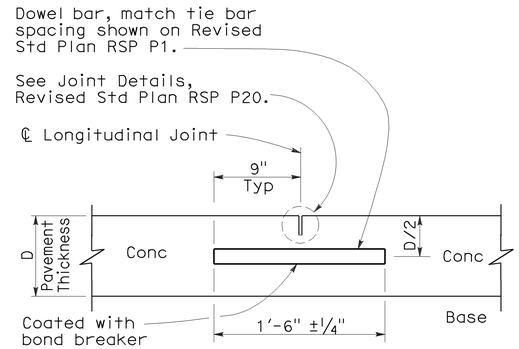

LONGITUDINAL CONTRACTION JOINT WITH DOWEL BARS

(See Revised Std Plan RSP P18)

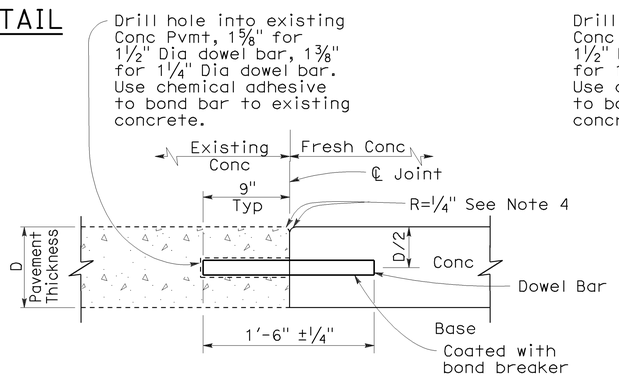

TRANSVERSE CONSTRUCTION JOINT FOR EXISTING CONCRETE PAVEMENT

(Drill and bond locations)

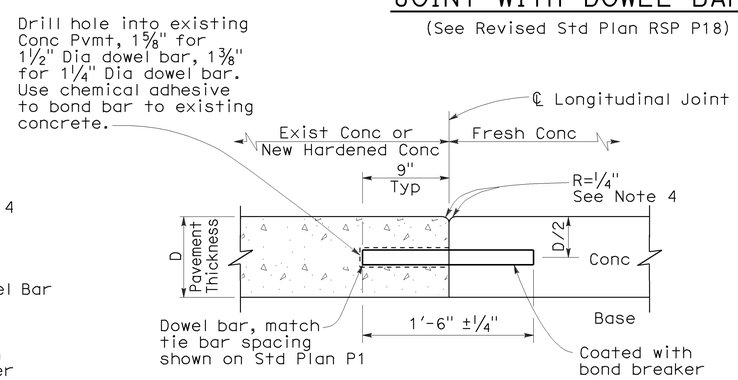

LONGITUDINAL CONSTRUCTION JOINT WITH DOWEL BARS

(See Revised Std Plan RSP P18)

STATE OF CALIFORNIA
DEPARTMENT OF TRANSPORTATION

CONCRETE PAVEMENT-DOWEL BAR DETAILS

NO SCALE

RSP P10 DATED MAY 15, 2009 SUPERSEDES STANDARD PLAN P10 DATED MAY 1, 2006 - PAGE 124 OF THE STANDARD PLANS BOOK DATED MAY 2006.

REVISED STANDARD PLAN RSP P10

2006 REVISED STANDARD PLAN RSP P10

5-8-09

NOTE:

1. Tie bars, dowel bars, and reinforcement are not shown in joint seal details, see Revised Standard Plans RSP P1, RSP P3, RSP P10, RSP P35, RSP P45, or RSP P46 as applicable.

DIST	COUNTY	ROUTE	POST MILES TOTAL PROJECT	SHEET NO.	TOTAL SHEETS
04	SM	101	12.0/13.5	48	56

William K. Farnbach
REGISTERED CIVIL ENGINEER

May 15, 2009
PLANS APPROVAL DATE

REGISTERED PROFESSIONAL ENGINEER William K. Farnbach No. C49042 Exp. 9-30-10 CIVIL STATE OF CALIFORNIA

The State of California or its officers or agents shall not be responsible for the accuracy or completeness of electronic copies of this plan sheet.

To accompany plans dated 1-23-12

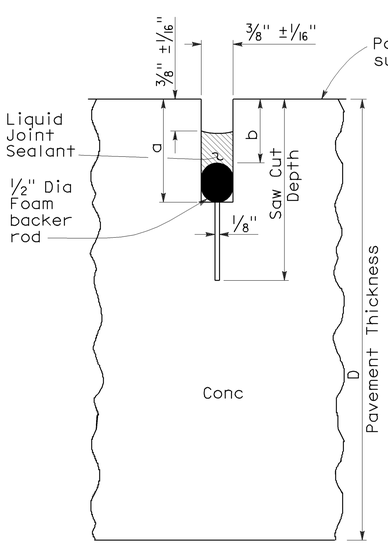

LIQUID SEALANT

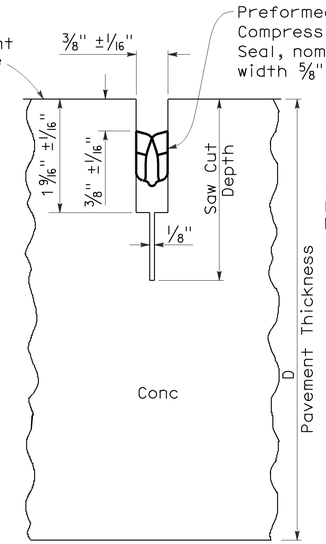

COMPRESSION SEAL

TYPE A1

Transverse Contraction Joints

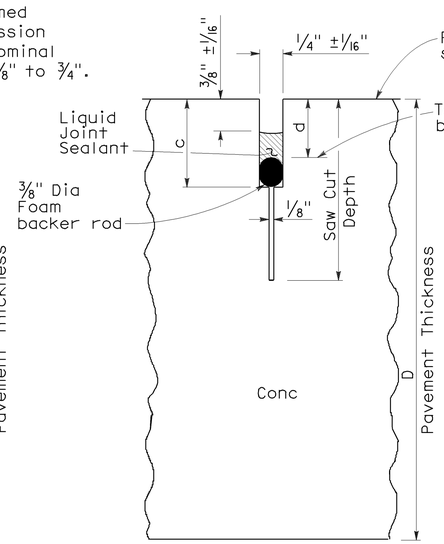

LIQUID SEALANT

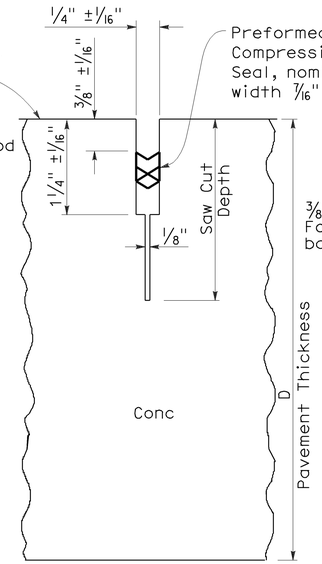

COMPRESSION SEAL

TYPE A2

Longitudinal Contraction Joints

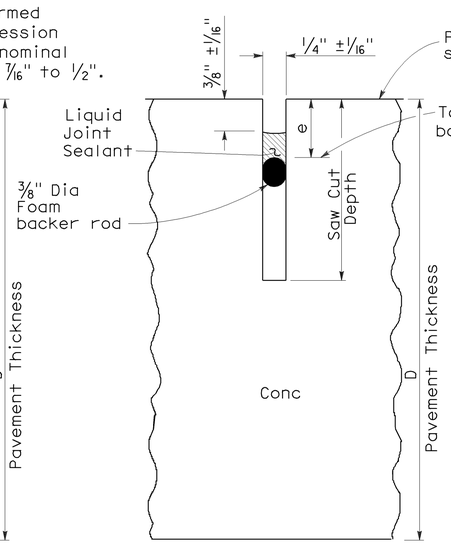

LIQUID SEALANT

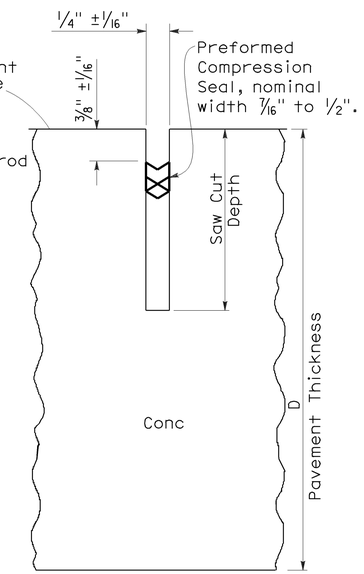

COMPRESSION SEAL

TYPE B

Longitudinal or Transverse Contraction Joint

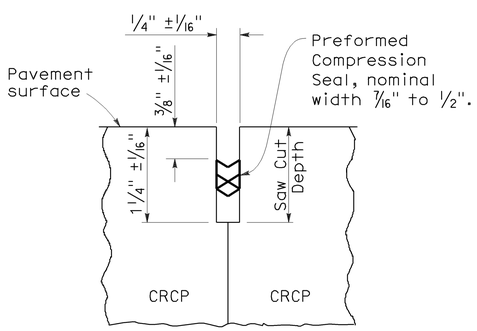

COMPRESSION SEAL

TYPE C

Transverse and Longitudinal Construction Joints (For CRCP)

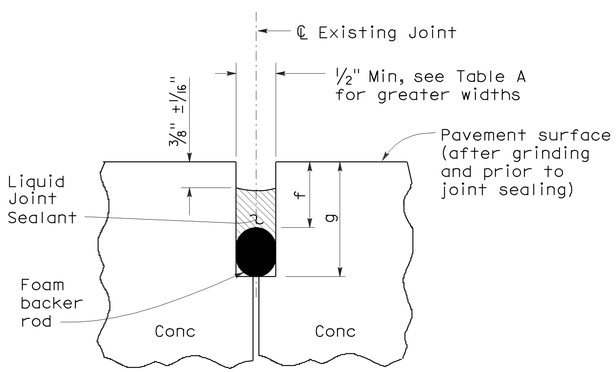

LIQUID SEALANT

TYPE R

Retrofit Transverse and Longitudinal Joints

LIQUID SEALANT RESERVOIR DEPTH

LIQUID SEALANT MATERIAL	3/8" Joint Width Type A1		1/4" Joint Width Type A2		1/4" Joint Width Type B
	DIMENSION		DIMENSION		DIMENSION
	a	b	c	d	e
SILCONE	1" ±1/16"	5/8" ±1/16"	15/16" ±1/16"	9/16" ±1/16"	9/16" ±1/16"
ASPHALT RUBBER	1 3/16" ±1/16"	3/4" ±1/16"	1 1/16" ±1/16"	11/16" ±1/16"	11/16" ±1/16"

TABLE A (TYPE R JOINT)

Sawn Joint Width	Backer Rod Diameter ± 1/16"	DIMENSION "f"	DIMENSION "g"
1"	1 5/16"	7/8"	2 1/4"
7/8"	1 3/16"	13/16"	2"
3/4"	1"	3/4"	1 3/4"
5/8"	7/8"	11/16"	1 1/2"
1/2"	11/16"	5/8"	1 1/4"

STATE OF CALIFORNIA
DEPARTMENT OF TRANSPORTATION

CONCRETE PAVEMENT-JOINT DETAILS

NO SCALE

RSP P20 DATED MAY 15, 2009 SUPERSEDES STANDARD PLAN P20 DATED MAY 1, 2006 - PAGE 128 OF THE STANDARD PLANS BOOK DATED MAY 2006.

REVISED STANDARD PLAN RSP P20

2006 REVISED STANDARD PLAN RSP P20

5-8-09

DIST	COUNTY	ROUTE	POST MILES TOTAL PROJECT	SHEET NO.	TOTAL SHEETS
04	SM	101	12.0/13.5	49	56

Randell D. Hiatt
REGISTERED CIVIL ENGINEER

June 6, 2008
PLANS APPROVAL DATE

REGISTERED PROFESSIONAL ENGINEER
Randell D. Hiatt
No. C50200
Exp. 6-30-09
CIVIL
STATE OF CALIFORNIA

The State of California or its officers or agents shall not be responsible for the accuracy or completeness of electronic copies of this plan sheet.

To accompany plans dated 1-23-12

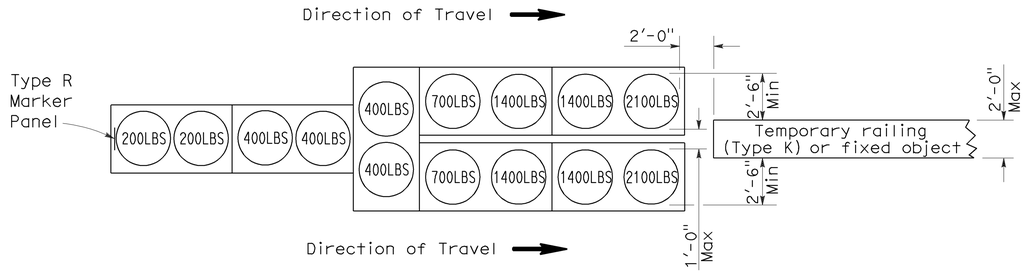

ARRAY 'TU14'

Approach speed 45 mph or more

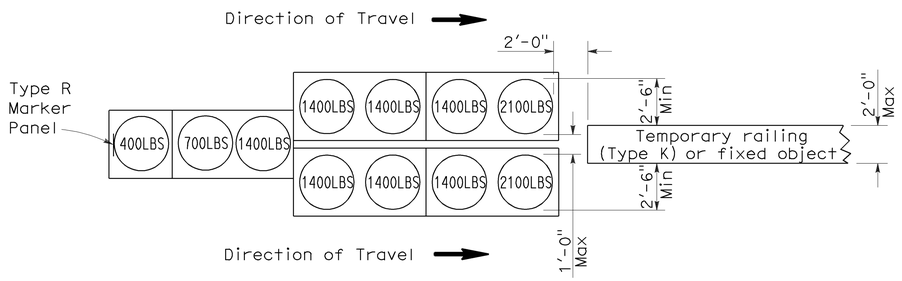

ARRAY 'TU11'

Approach speed less than 45 mph

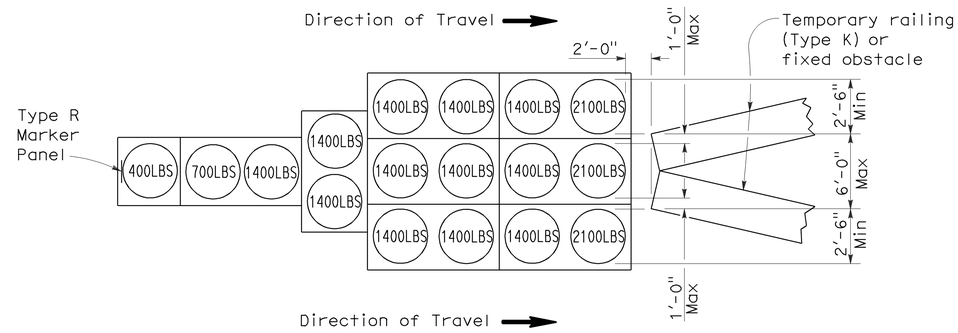

ARRAY 'TU17'

Approach speed less than 45 mph

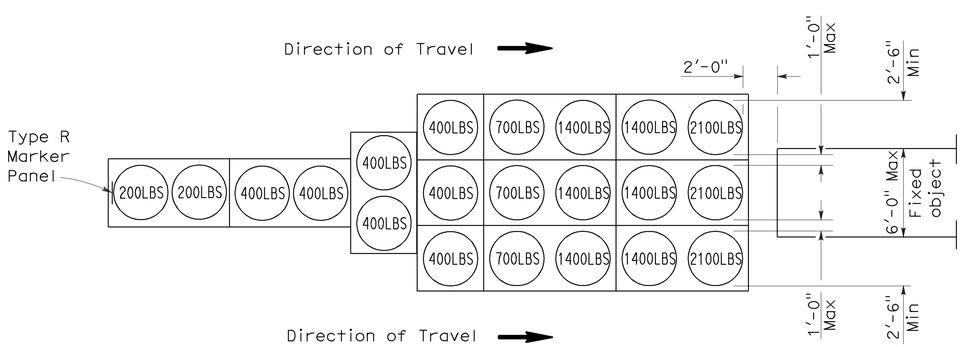

ARRAY 'TU21'

Approach speed 45 mph or more

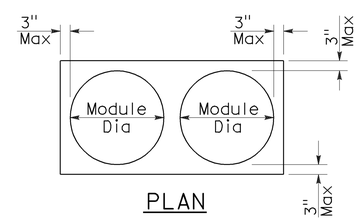

PLAN

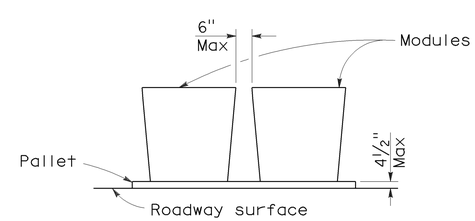

ELEVATION

CRASH CUSHION PALLET DETAIL

See Note 7

NOTES:

1. (XXX) Indicates sand filled module location and weight of sand in pounds for each module. Module spacing is based on the greater diameter of the module.
2. All sand weights are nominal.
3. Temporary crash cushion arrays shall not encroach on the traveled way.
4. Place the top of Type R marker panel 1" below the module lid.
5. Refer to Standard Plan A73B for marker details.
6. Approach speeds indicated conform to NCHRP 350 Report criteria.
7. Use of pallets is optional.

STATE OF CALIFORNIA
DEPARTMENT OF TRANSPORTATION

TEMPORARY CRASH CUSHION, SAND FILLED (UNIDIRECTIONAL)

NO SCALE

RSP T1A DATED JUNE 6, 2008 SUPERSEDES STANDARD PLAN T1A
DATED MAY 1, 2006 - PAGE 211 OF THE STANDARD PLANS BOOK DATED MAY 2006.

REVISED STANDARD PLAN RSP T1A

2006 REVISED STANDARD PLAN RSP T1A

DIST	COUNTY	ROUTE	POST MILES TOTAL PROJECT	SHEET NO.	TOTAL SHEETS
04	SM	101	12.0/13.5	50	56

Randell D. Hiatt
REGISTERED CIVIL ENGINEER

June 6, 2008
PLANS APPROVAL DATE

REGISTERED PROFESSIONAL ENGINEER
Randell D. Hiatt
No. C50200
Exp. 6-30-09
CIVIL
STATE OF CALIFORNIA

The State of California or its officers or agents shall not be responsible for the accuracy or completeness of electronic copies of this plan sheet.

To accompany plans dated 1-23-12

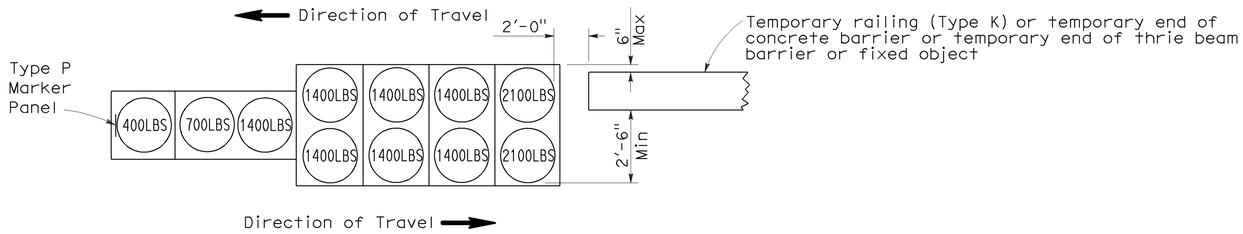

ARRAY 'TB11'

Approach speed less than 45 mph

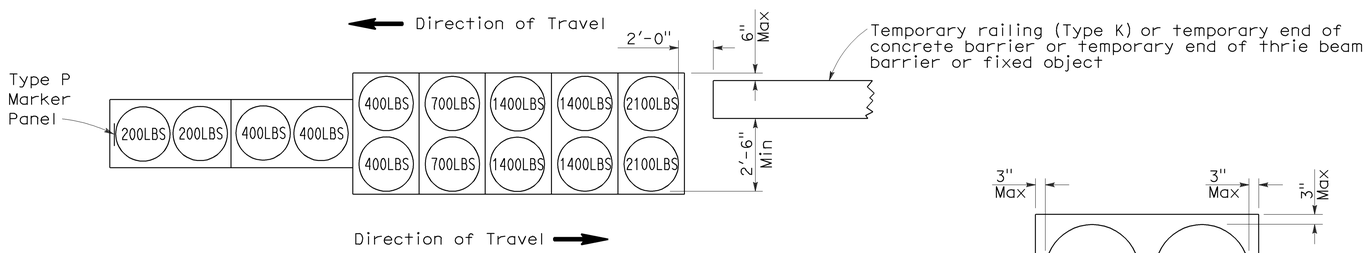

ARRAY 'TB14'

Approach speed 45 mph or more

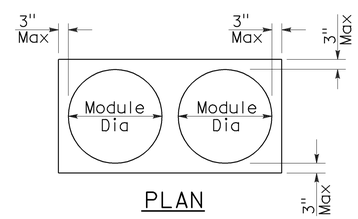

PLAN

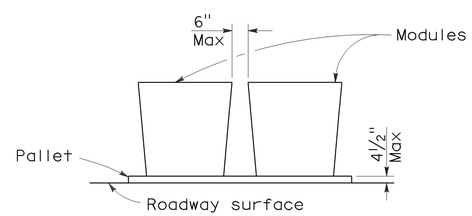

ELEVATION

CRASH CUSHION PALLET DETAIL

See Note 7

NOTES:

1. (XXX) Indicates sand filled module location and weight of sand in pounds for each module. Module spacing is based on the greater diameter of the module.
2. All sand weights are nominal.
3. Temporary crash cushion arrays shall not encroach on the traveled way.
4. Place the Type P marker panel so that the bottom of the panel rests upon the pallet.
5. Refer to Standard Plan A73B for marker details.
6. Approach speeds indicated conform to NCHRP 350 Report criteria.
7. Use of pallets is optional.

STATE OF CALIFORNIA
DEPARTMENT OF TRANSPORTATION

TEMPORARY CRASH CUSHION, SAND FILLED (BIDIRECTIONAL)

NO SCALE

RSP T1B DATED JUNE 6, 2008 SUPERSEDES STANDARD PLAN T1B
DATED MAY 1, 2006 - PAGE 212 OF THE STANDARD PLANS BOOK DATED MAY 2006.

REVISED STANDARD PLAN RSP T1B

2006 REVISED STANDARD PLAN RSP T1B

5-15-08

DIST	COUNTY	ROUTE	POST MILES TOTAL PROJECT	SHEET NO.	TOTAL SHEETS
04	SM	101	12.0/13.5	51	56

Randell D. Hiatt
REGISTERED CIVIL ENGINEER

June 6, 2008
PLANS APPROVAL DATE

REGISTERED PROFESSIONAL ENGINEER
Randell D. Hiatt
No. C50200
Exp. 6-30-09
CIVIL
STATE OF CALIFORNIA

The State of California or its officers or agents shall not be responsible for the accuracy or completeness of electronic copies of this plan sheet.

To accompany plans dated 1-23-12

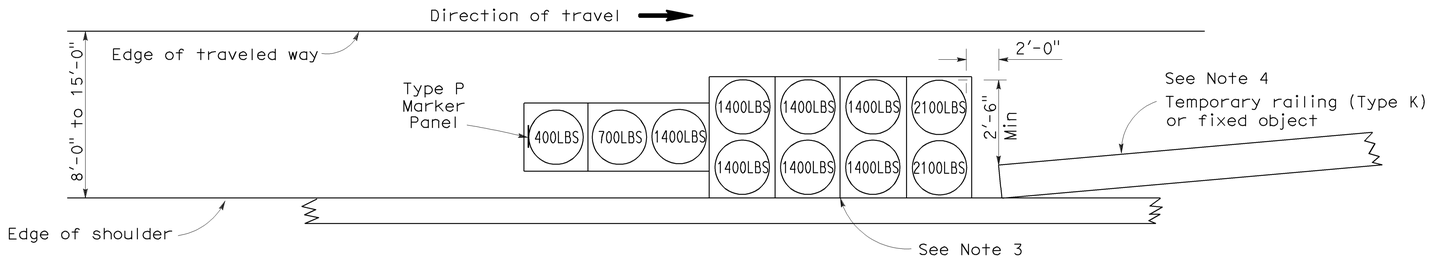

ARRAY 'TS11'

Approach speed less than 45 mph
See Note 9

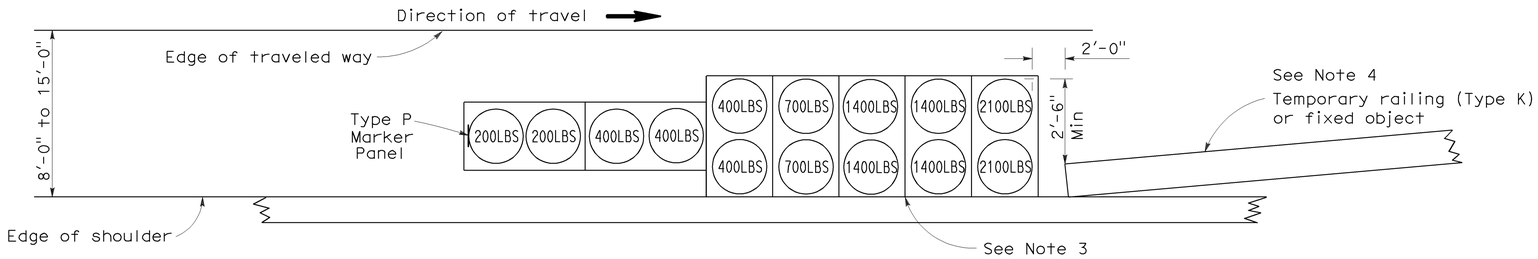

ARRAY 'TS14'

Approach speed 45 mph or more
See Note 9

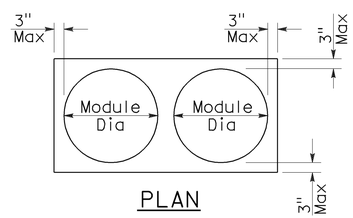

PLAN

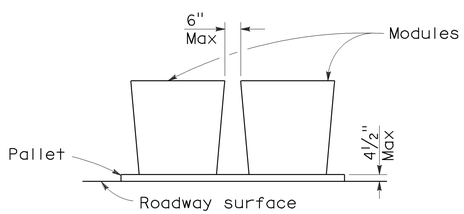

ELEVATION

CRASH CUSHION PALLET DETAIL

See Note 11

NOTES:

1. (XXX) Indicates sand filled module location and weight of sand in pounds for each module. Module spacing is based on the greater diameter of the module.
2. All sand weights are nominal.
3. The temporary crash cushion arrays shown on this plan shall be used only in locations where there will be traffic on one side of the temporary crash cushion array.
4. If the fixed object or approach end of the temporary railing is less than 15'-0" from the edge of traveled way, a temporary crash cushion is required in a construction or work zone.
5. Temporary crash cushion arrays shall not encroach on the traveled way.
6. Arrays for median shoulders shall conform to details shown on this plan for outside shoulders.
7. Place the Type P marker panel so that the bottom of the panel rests upon the pallet and faces traffic.
8. Refer to Standard Plan A73B for marker details.
9. For shoulder widths less than 8'-0", appropriate approved crash cushion protection, other than sand filled modules, shall be provided at fixed objects and at approach ends of temporary railing. The specific type of crash cushion shall be as shown on the project plans or as specified in the Special Provisions, or if not shown on the project plans or specified in the Special Provisions, shall be as approved by the Engineer.
10. Approach speeds indicated conform to NCHRP 350 Report criteria.
11. Use of pallets is optional.

STATE OF CALIFORNIA
DEPARTMENT OF TRANSPORTATION

TEMPORARY CRASH CUSHION, SAND FILLED (SHOULDER INSTALLATIONS)

NO SCALE

RSP T2 DATED JUNE 6, 2008 SUPERSEDES STANDARD PLAN T2
DATED MAY 1, 2006 - PAGE 213 OF THE STANDARD PLANS BOOK DATED MAY 2006.

REVISED STANDARD PLAN RSP T2

2006 REVISED STANDARD PLAN RSP T2

5-15-08

Dist	COUNTY	ROUTE	POST MILES TOTAL PROJECT	SHEET No.	TOTAL SHEETS
04	SM	101	12.0/13.5	52	56

Randell D. Hiatt
REGISTERED CIVIL ENGINEER

May 20, 2011
PLANS APPROVAL DATE

REGISTERED PROFESSIONAL ENGINEER
Randell D. Hiatt
No. C50200
Exp. 6-30-11
CIVIL
STATE OF CALIFORNIA

The State of California or its officers or agents shall not be responsible for the accuracy or completeness of electronic copies of this plan sheet.

To accompany plans dated 1-23-12

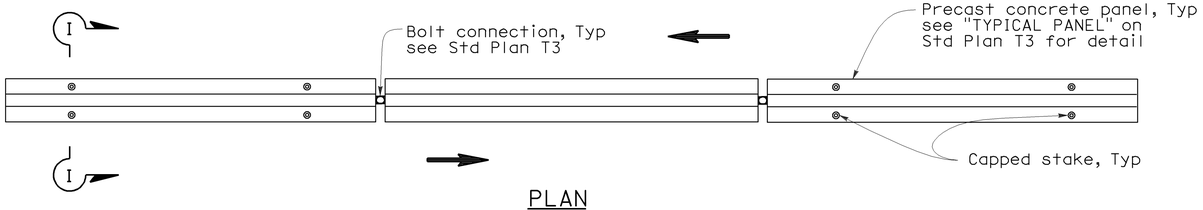

PLAN

RAILING STAKING CONFIGURATION FOR TWO-WAY TRAFFIC

See Note 1

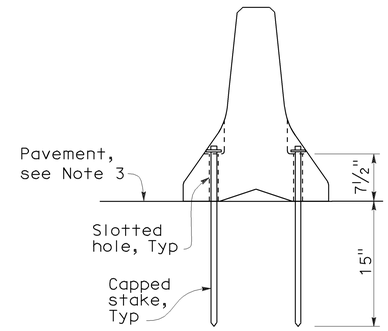

SECTION I-I

NOTES:

1. Where Type K Temporary Railing is placed as a temporary or long term barrier in two-way traffic on highways with less than 24" from the edge of traveled way, use four capped stakes per every other panel with end panels staked.
2. Where Type K Temporary Railing is placed 3" to 24" from the edge of an excavation on highways, use two capped stakes per panel along the traffic side.
3. Staked Type K Temporary Railing must be supported by at least 4" thick concrete, hot mix asphalt or existing asphalt concrete pavement.
4. The minimum yield strength for the washer must be 60,000 psi.
5. Direction of adjacent traffic indicated by ⟹.

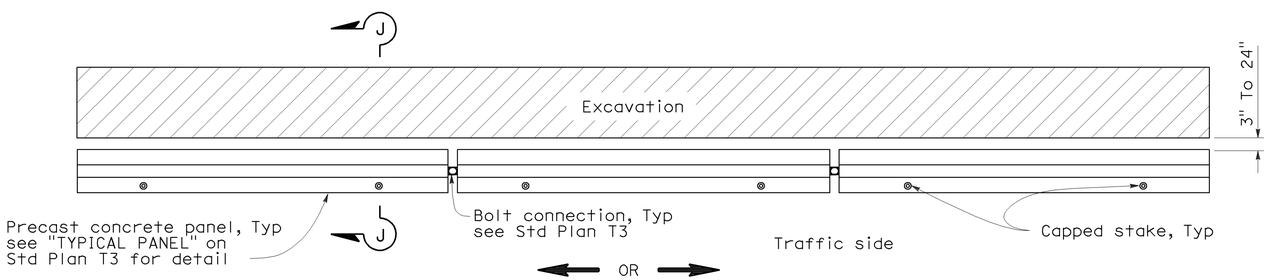

PLAN

RAILING STAKING CONFIGURATION ADJACENT TO AN EXCAVATION

See Note 2

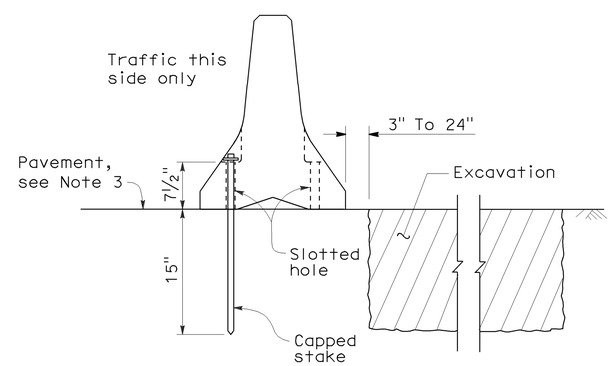

SECTION J-J

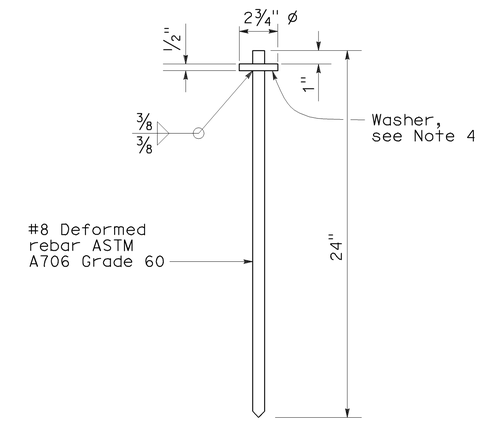

CAPPED STAKE DETAIL

STATE OF CALIFORNIA
DEPARTMENT OF TRANSPORTATION

TEMPORARY RAILING (TYPE K)

NO SCALE

NSP T3A DATED MAY 20, 2011 SUPPLEMENTS
THE STANDARD PLANS BOOK DATED MAY 2006.

NEW STANDARD PLAN NSP T3A

2006 NEW STANDARD PLAN NSP T3A

DIST	COUNTY	ROUTE	POST MILES TOTAL PROJECT	SHEET NO.	TOTAL SHEETS
04	SM	101	12.0/13.5	53	56

LICENSED LANDSCAPE ARCHITECT

August 15, 2008
PLANS Approval DATE

The State of California or its officers or agents shall not be responsible for the accuracy or completeness of electronic copies of this plan sheet.

LICENSED LANDSCAPE ARCHITECT
Robert B. Schott 3635
Signature
11-04-08
Renewal Date
08-11-08
Date
STATE OF CALIFORNIA

To accompany plans dated 1-23-12

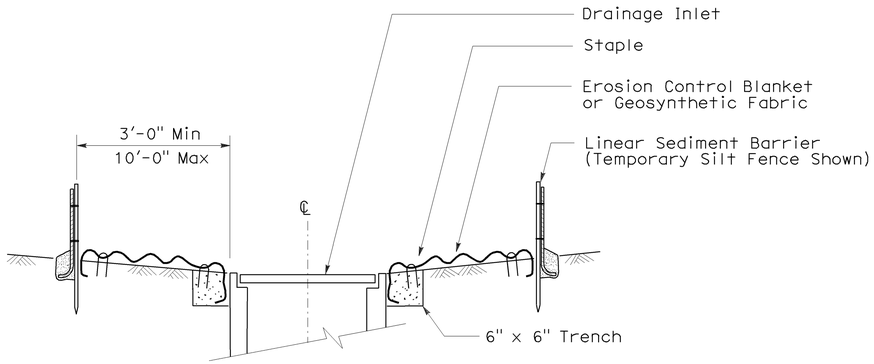

SECTION A-A

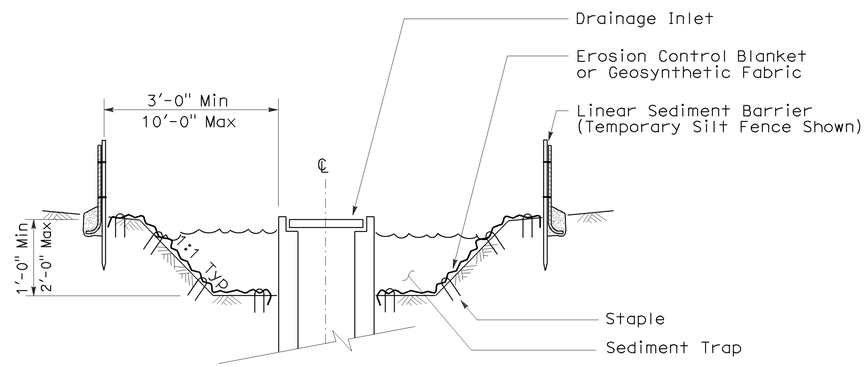

SECTION B-B

NOTES:

1. See Standard Plan T51 for Temporary Silt Fence.
2. Dimensions may vary to fit field conditions.

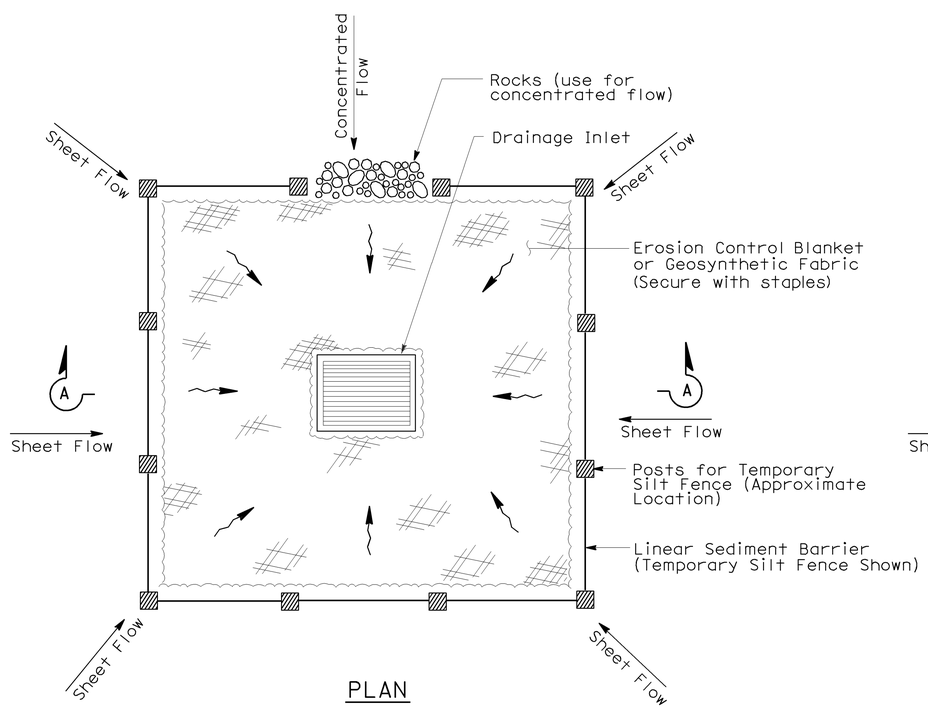

PLAN

TEMPORARY DRAINAGE INLET PROTECTION (TYPE 1)

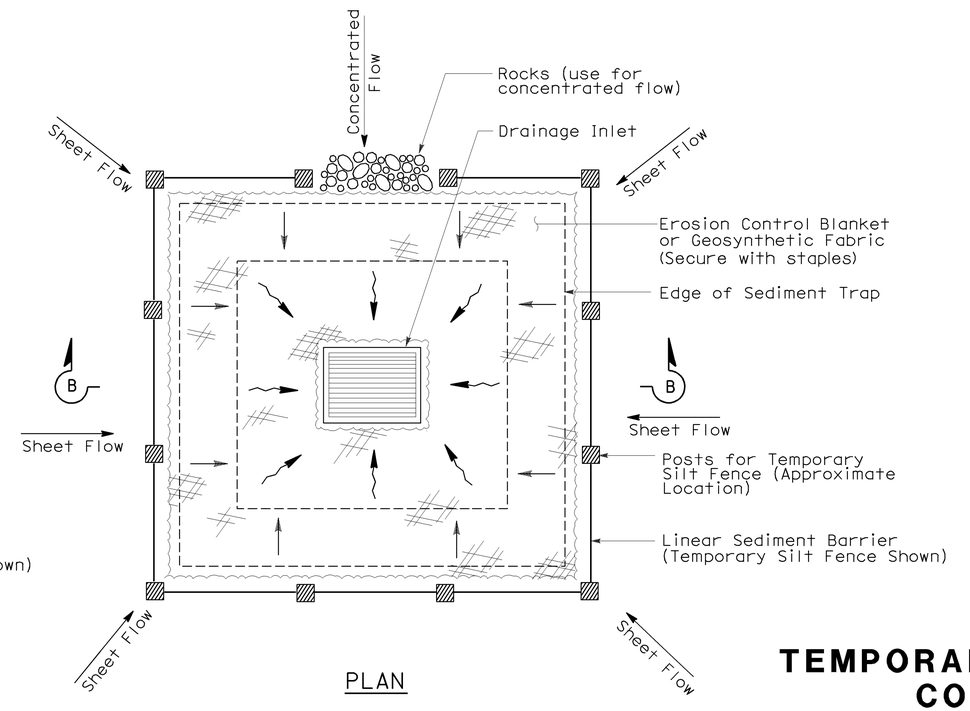

PLAN

TEMPORARY DRAINAGE INLET PROTECTION (TYPE 2) (EXCAVATED SEDIMENT TRAP)

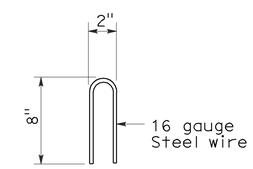

STAPLE DETAIL

STATE OF CALIFORNIA
DEPARTMENT OF TRANSPORTATION

TEMPORARY WATER POLLUTION CONTROL DETAILS (TEMPORARY DRAINAGE INLET PROTECTION)

NO SCALE

Nsp t61 dated august 15, 2008 supplements the standard plans book dated may 2006.

NEW STANDARD PLAN NSP T61

2006 NEW STANDARD PLAN NSP T61

7-11-08

DIST	COUNTY	ROUTE	POST MILES TOTAL PROJECT	SHEET NO.	TOTAL SHEETS
04	SM	101	12.0/13.5	54	56

LICENSED LANDSCAPE ARCHITECT

August 15, 2008
PLANS APPROVAL DATE

The State of California or its officers or agents shall not be responsible for the accuracy or completeness of electronic copies of this plan sheet.

LICENSED LANDSCAPE ARCHITECT — Robert B. Schott 3635 — Signature — 11-04-08 Renewal Date — 08-11-08 Date — STATE OF CALIFORNIA

To accompany plans dated 1-23-12

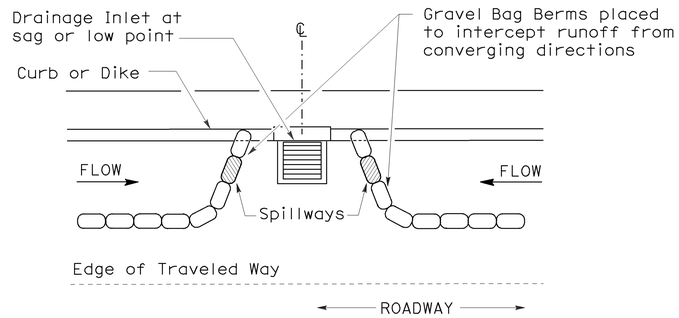

PLAN

CONFIGURATION FOR SAG POINT INLET (GRAVEL BAG BERM)

GRAVEL BAG BERM (TYPE 3A) SPACING TABLE

SLOPE OF ROADWAY (PERCENT)	1 to 3.9	4 to 5.9	6 to 7.9	8 to 10	10+
INTERVAL BETWEEN BERM	100′	75′	50′	25′	12′

For slope of less than 1%, install barriers only if erosion/sediment is prevalent

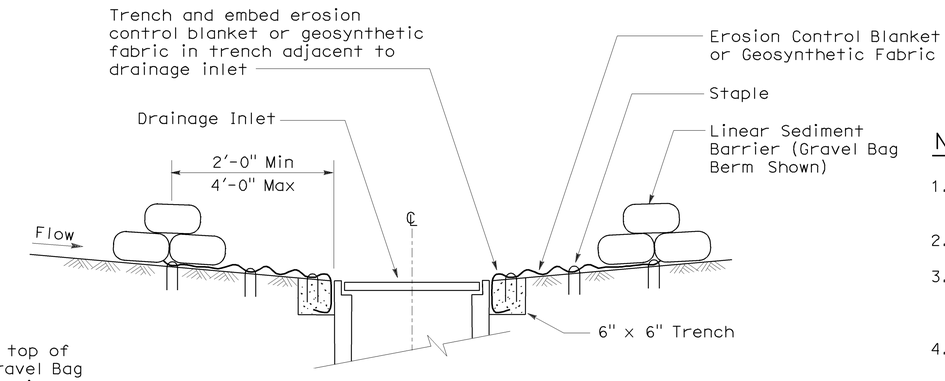

SECTION A-A

NOTES:

1. Place safety cones adjacent to drainage inlet protection.
2. Dimensions may vary to fit field conditions.
3. Install a minimum of 3 gravel bag berms upstream of each drainage inlet to be protected.
4. Position erosion control blanket or geosynthetic fabric at edge of concrete apron and secure in trench.
5. Erosion control blanket or geosynthetic fabric is not required if the area adjacent to the drainage inlet is vegetated or paved.

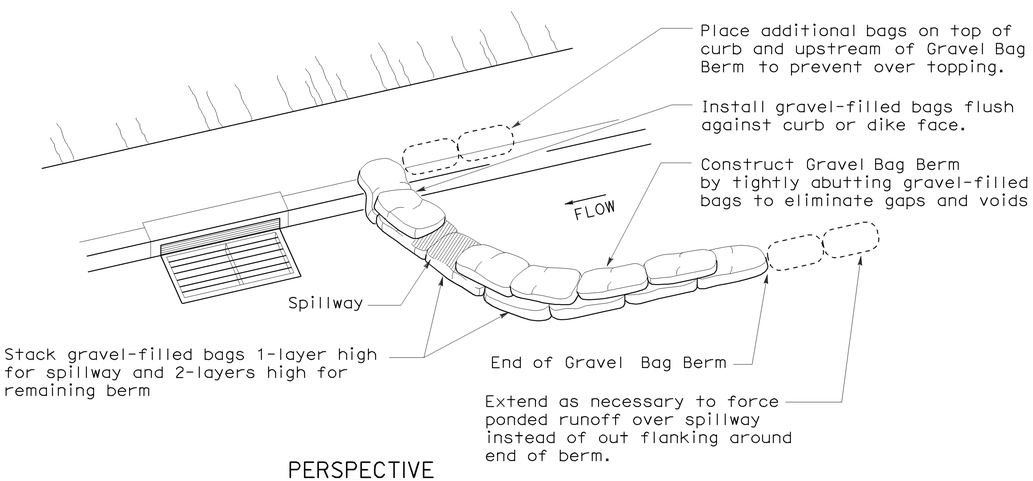

PERSPECTIVE

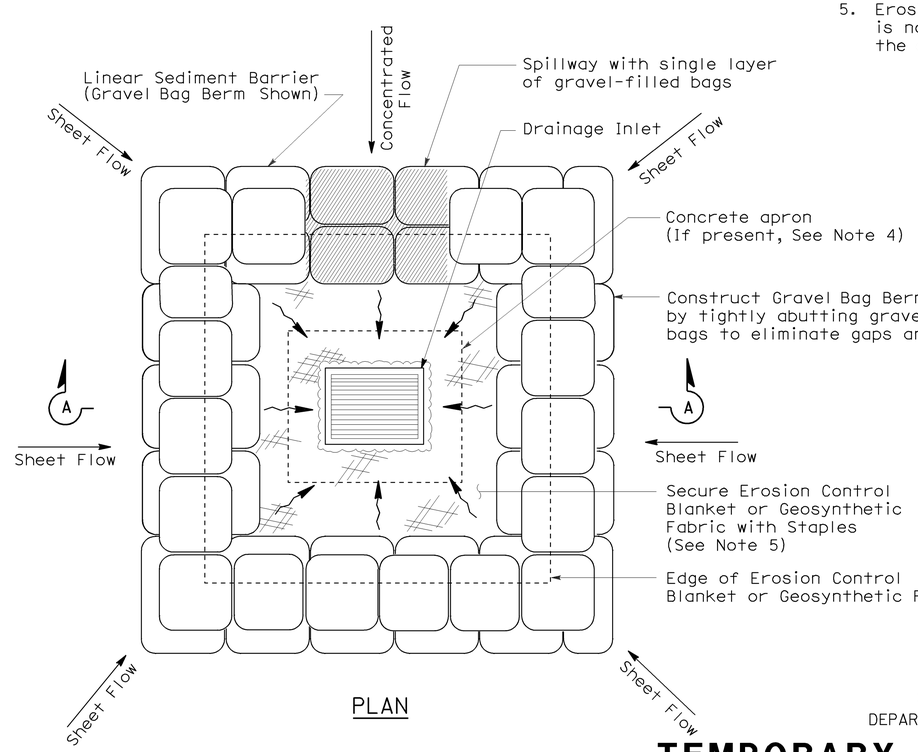

PLAN

TEMPORARY DRAINAGE INLET PROTECTION (TYPE 3B)

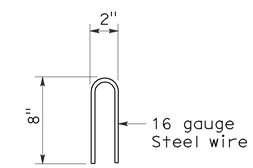

STAPLE DETAIL

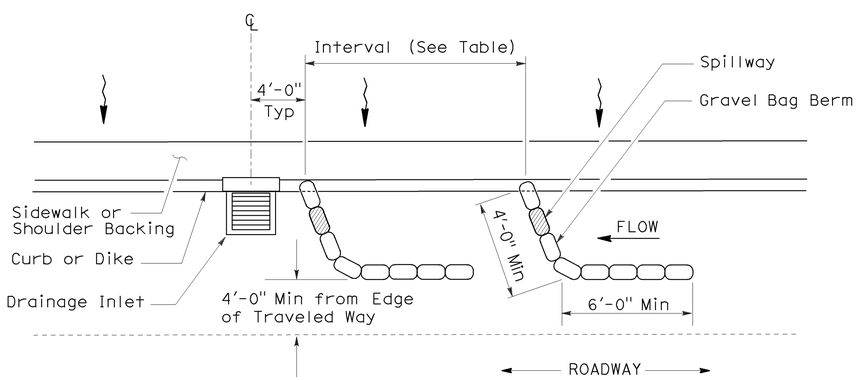

PLAN

TEMPORARY DRAINAGE INLET PROTECTION (TYPE 3A) (GRAVEL BAG BERM)

STATE OF CALIFORNIA
DEPARTMENT OF TRANSPORTATION

TEMPORARY WATER POLLUTION CONTROL DETAILS (TEMPORARY DRAINAGE INLET PROTECTION)

NO SCALE

NSP T62 DATED AUGUST 15, 2008 SUPPLEMENTS THE STANDARD PLANS BOOK DATED MAY 2006.

NEW STANDARD PLAN NSP T62

2006 NEW STANDARD PLAN NSP T62

7-11-08

DIST	COUNTY	ROUTE	POST MILES TOTAL PROJECT	SHEET NO.	TOTAL SHEETS
04	SM	101	12.0/13.5	55	56

LICENSED LANDSCAPE ARCHITECT

August 15, 2008
PLANS APPROVAL DATE

LICENSED LANDSCAPE ARCHITECT — Robert B. Schott 3635 — Signature — 11-04-08 Renewal Date — 08-11-08 Date — STATE OF CALIFORNIA

The State of California or its officers or agents shall not be responsible for the accuracy or completeness of electronic copies of this plan sheet.

To accompany plans dated 1-23-12

FLEXIBLE SEDIMENT BARRIER SPACING TABLE

SLOPE OF ROADWAY (PERCENT)	0 to 0.9	1 to 1.9	2 to 2.9	3 to 4	5+
INTERVAL BETWEEN BARRIERS	50′	35′	30′	25′	20′
ANGLE FROM FACE OF CURB	70°	70°	70°	45°	45°
SUGGESTED BARRIER LENGTH	6′	6′	6′	6′	6′

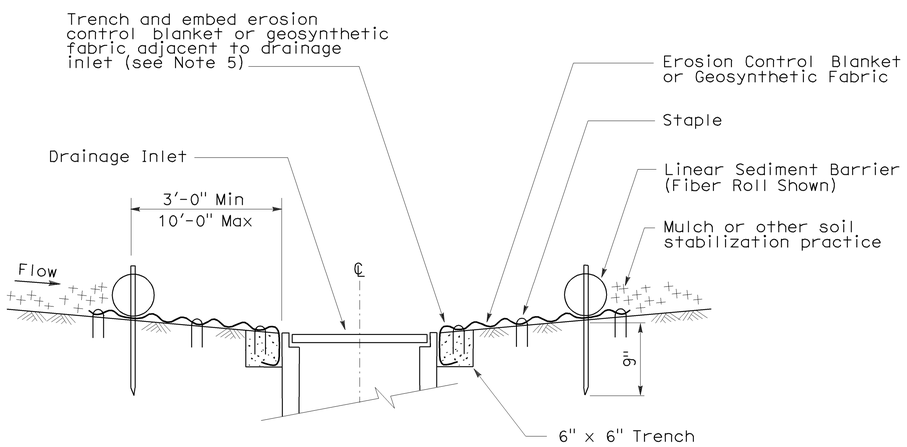

SECTION A-A

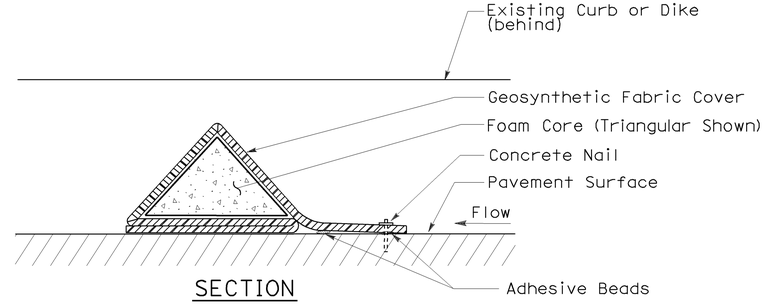

SECTION

FLEXIBLE SEDIMENT BARRIER DETAIL (FOAM BARRIER SHOWN)

NOTES:

1. See Standard Plan T51 for Temporary Silt Fence.
2. Dimensions may vary to fit field conditions.
3. Install a minimum of 3 flexible sediment barriers upstream of each drainage inlet to be protected.
4. Position erosion control blanket or geosynthetic fabric at edge of concrete apron and secure in trench.
5. Erosion control blanket or geosynthetic fabric is not required if the area adjacent to the drainage inlet is vegetated.

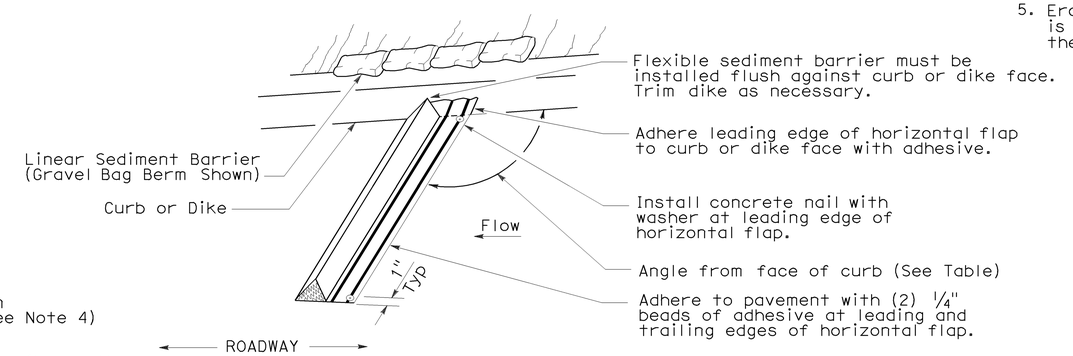

PERSPECTIVE

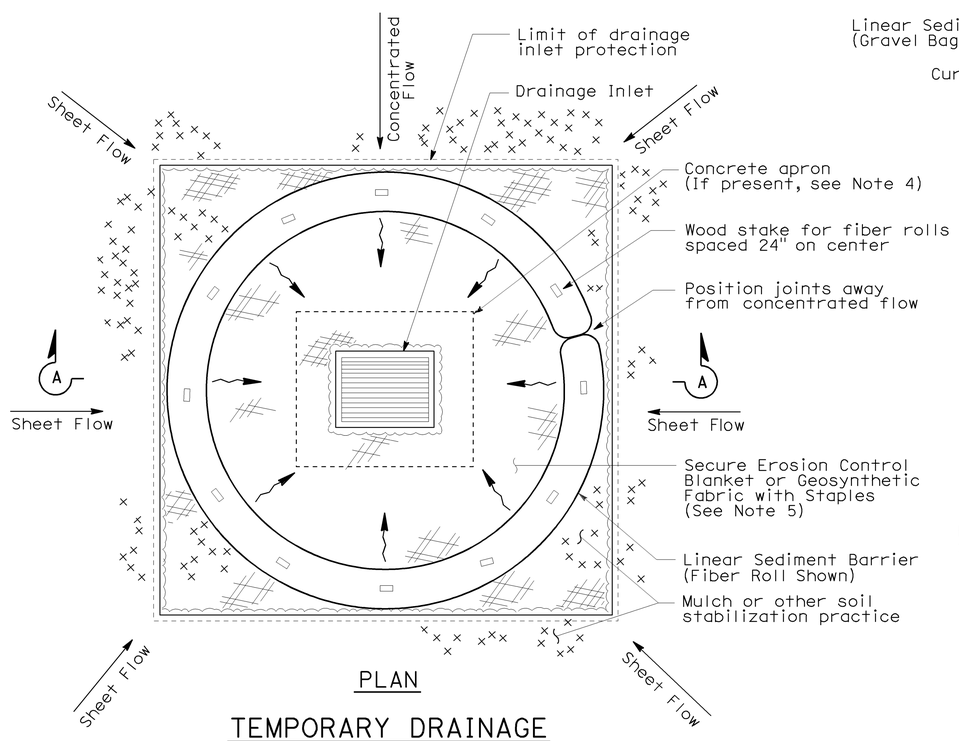

PLAN

TEMPORARY DRAINAGE INLET PROTECTION (TYPE 4A)

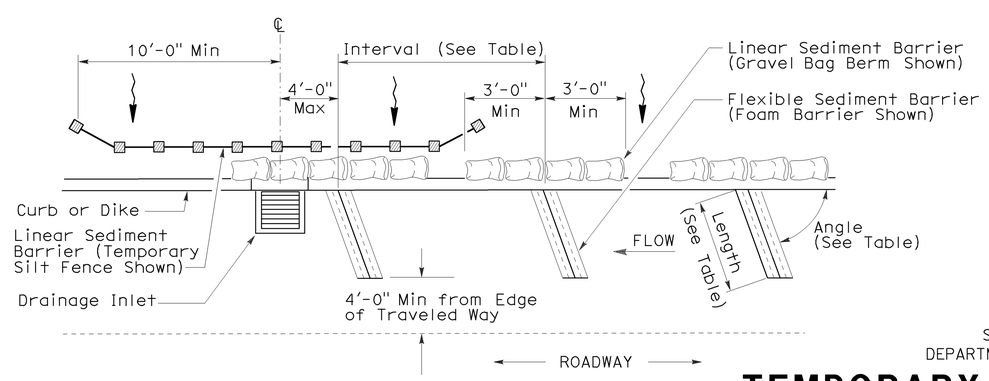

PLAN

TEMPORARY DRAINAGE INLET PROTECTION (TYPE 4B) FLEXIBLE SEDIMENT BARRIER

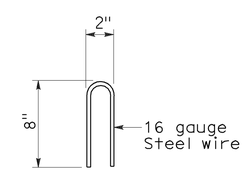

STAPLE DETAIL

STATE OF CALIFORNIA
DEPARTMENT OF TRANSPORTATION

TEMPORARY WATER POLLUTION CONTROL DETAILS (TEMPORARY DRAINAGE INLET PROTECTION)

NO SCALE

NSP T63 DATED AUGUST 15, 2008 SUPPLEMENTS THE STANDARD PLANS BOOK DATED MAY 2006.

NEW STANDARD PLAN NSP T63

2006 NEW STANDARD PLAN NSP T63

7-11-08

DIST	COUNTY	ROUTE	POST MILES TOTAL PROJECT	SHEET NO.	TOTAL SHEETS
04	SM	101	12.0/13.5	56	56

LICENSED LANDSCAPE ARCHITECT

August 15, 2008
PLANS APPROVAL DATE

LICENSED LANDSCAPE ARCHITECT
Robert B. Schott 3635
Signature
11-04-08
Renewal Date
08-11-08
Date
STATE OF CALIFORNIA

The State of California or its officers or agents shall not be responsible for the accuracy or completeness of electronic copies of this plan sheet.

To accompany plans dated 1-23-12

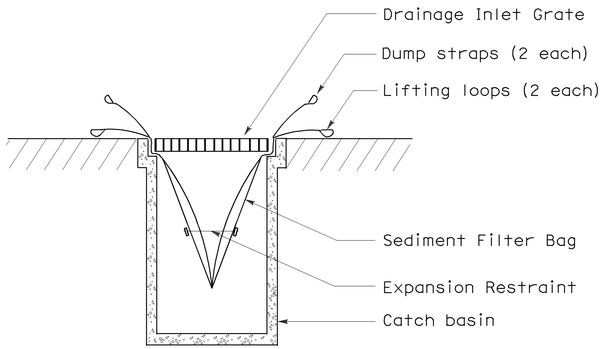

SECTION B-B

SEDIMENT FILTER BAG DETAIL

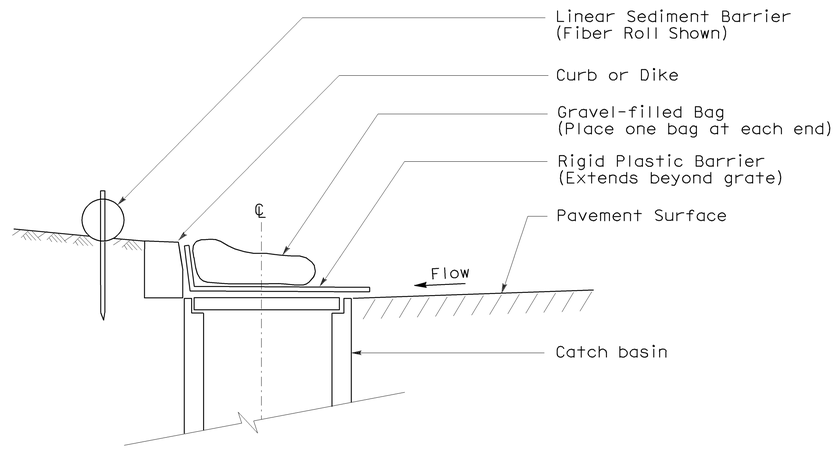

SECTION

TEMPORARY DRAINAGE INLET PROTECTION (TYPE 6A) (CATCH BASIN WITH GRATE)

NOTES:

1. See Standard Plan T51 for Temporary Silt Fence.
2. Dimensions may vary to fit field conditions.

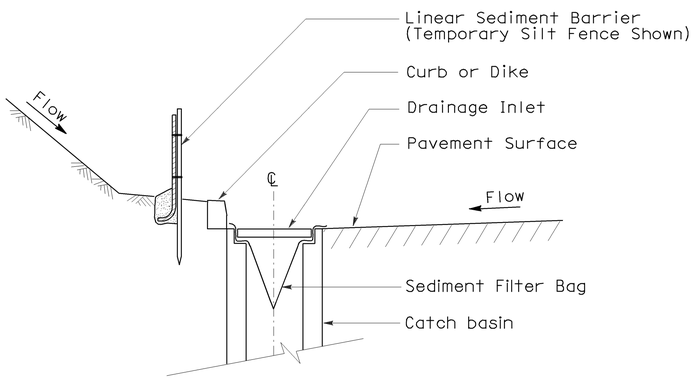

SECTION A-A

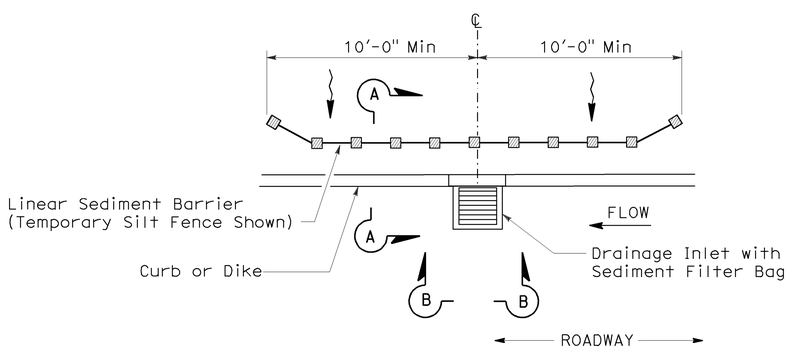

PLAN

TEMPORARY DRAINAGE INLET PROTECTION (TYPE 5) (SEDIMENT FILTER BAG)

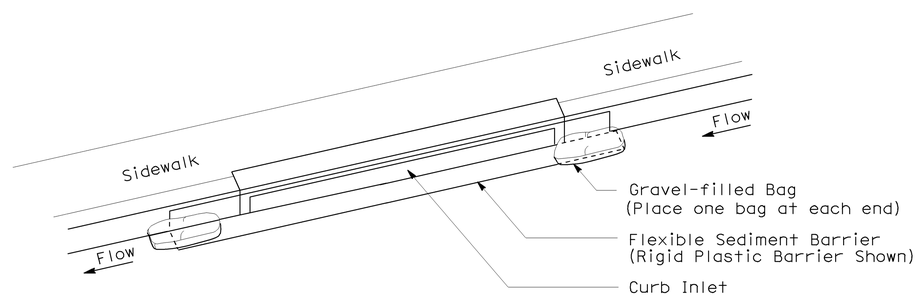

PERSPECTIVE

TEMPORARY DRAINAGE INLET PROTECTION (TYPE 6B) (CURB INLET WITHOUT GRATE)

STATE OF CALIFORNIA
DEPARTMENT OF TRANSPORTATION

TEMPORARY WATER POLLUTION CONTROL DETAILS (TEMPORARY DRAINAGE INLET PROTECTION)

NO SCALE

NSP T64 DATED AUGUST 15, 2008 SUPPLEMENTS
THE STANDARD PLANS BOOK DATED MAY 2006.

NEW STANDARD PLAN NSP T64

2006 NEW STANDARD PLAN NSP T64

7-11-08