Dist	COUNTY	ROUTE	POST MILES TOTAL PROJECT	SHEET No.	TOTAL SHEETS
04	Nap	128	R7.4/34.3	1	12

INDEX OF PLANS

SHEET No.	DESCRIPTION
1	TITLE SHEET AND LOCATION MAP
2	TYPICAL CROSS SECTION
3	CONSTRUCTION AREA SIGNS
4	PAVEMENT DELINEATION QUANTITIES
5	SUMMARY OF QUANTITIES
6-12	REVISED AND NEW STANDARD PLANS

THE STANDARD PLANS LIST APPLICABLE TO THIS CONTRACT IS INCLUDED IN THE NOTICE TO BIDDERS AND SPECIAL PROVISIONS BOOK.

STATE OF CALIFORNIA

DEPARTMENT OF TRANSPORTATION

PROJECT PLANS FOR CONSTRUCTION ON STATE HIGHWAY

IN NAPA COUNTY NEAR CALISTOGA AND YOUNTVILLE FROM SILVERADO TRAIL TO SOLANO COUNTY LINE

TO BE SUPPLEMENTED BY STANDARD PLANS DATED MAY 2006

LOCATION MAP

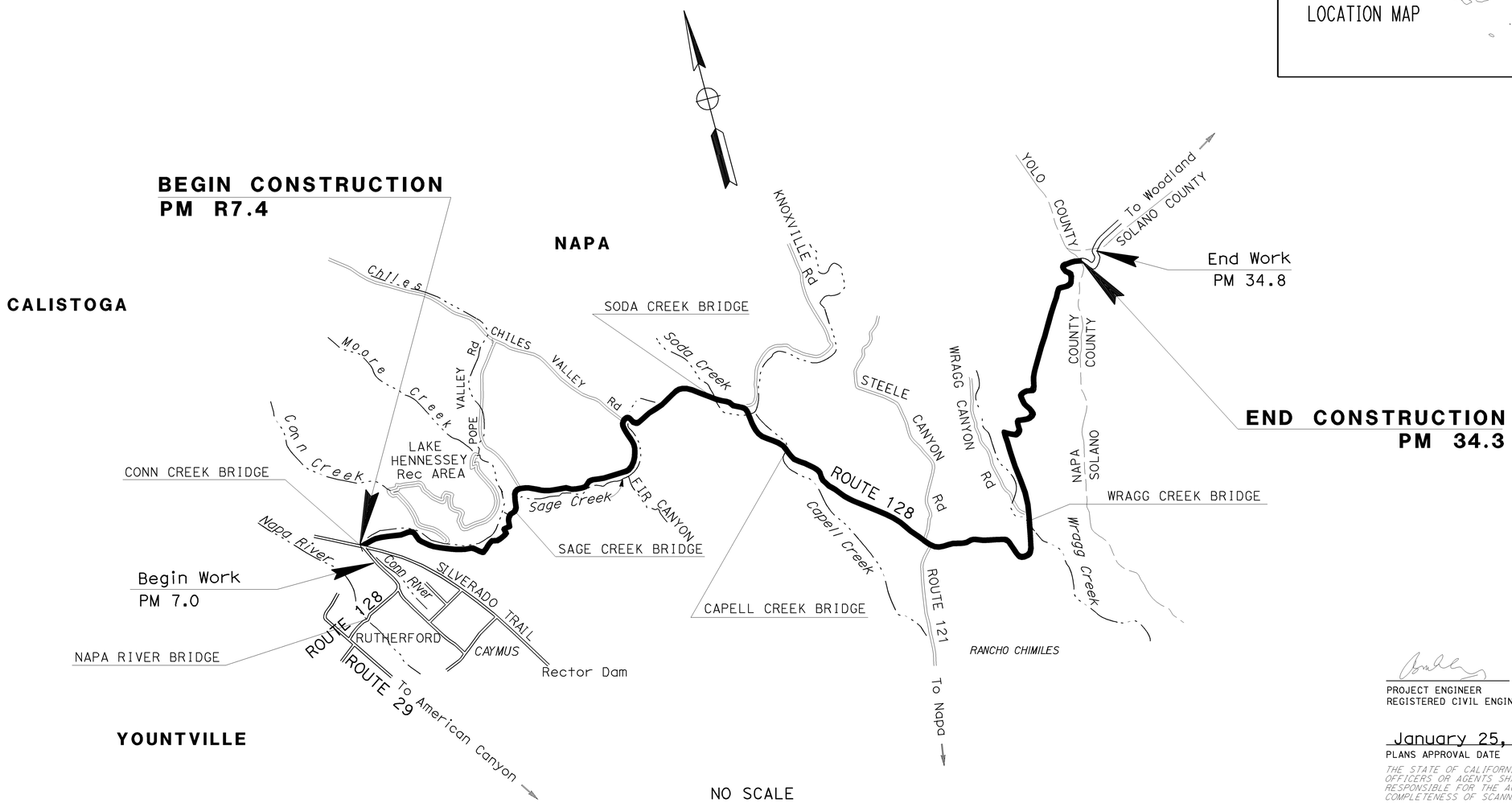

NO SCALE

THE CONTRACTOR SHALL POSSESS THE CLASS (OR CLASSES) OF LICENSE AS SPECIFIED IN THE "NOTICE TO BIDDERS."

PROJECT MANAGER: RAMSES SARGISS

DESIGN ENGINEER: VIJITH THILAKARATNE

11/24/09
PROJECT ENGINEER DATE
REGISTERED CIVIL ENGINEER

January 25, 2010
PLANS APPROVAL DATE

REGISTERED PROFESSIONAL ENGINEER
B.V. Hong
No. 63850
Exp. 9-30-10
CIVIL
STATE OF CALIFORNIA

THE STATE OF CALIFORNIA OR ITS OFFICERS OR AGENTS SHALL NOT BE RESPONSIBLE FOR THE ACCURACY OR COMPLETENESS OF SCANNED COPIES OF THIS PLAN SHEET.

CONTRACT No. **04-1E8604**

LAST REVISION 11-24-09 DATE PLOTTED => 28-JAN-2010 TIME PLOTTED => 11:17

lsing\PSE\1e8601\41e860ab001.dgn

Dist	COUNTY	ROUTE	POST MILES TOTAL PROJECT	SHEET No.	TOTAL SHEETS
04	Nap	128	R7.4/34.3	2	12

REGISTERED CIVIL ENGINEER 11/24/09 DATE

1-25-10
PLANS APPROVAL DATE

REGISTERED PROFESSIONAL ENGINEER
B.V. Hong
No. 63850
Exp. 9-30-10
CIVIL
STATE OF CALIFORNIA

THE STATE OF CALIFORNIA OR ITS OFFICERS OR AGENTS SHALL NOT BE RESPONSIBLE FOR THE ACCURACY OR COMPLETENESS OF SCANNED COPIES OF THIS PLAN SHEET.

NOTES

1. DIMENSIONS OF THE PAVEMENT STRUCTURES (STRUCTURAL SECTIONS) ARE SUBJECT TO TOLERANCES SPECIFIED IN THE STANDARD SPECIFICATIONS.
2. EXISTING UTILITY FACILITIES ARE NOT PLOTTED ON THESE PLANS.
3. FOR ACCURATE RIGHT OF WAY DATA, SEE RIGHT OF WAY ENGINEERING AT THE DISTRICT OFFICE.

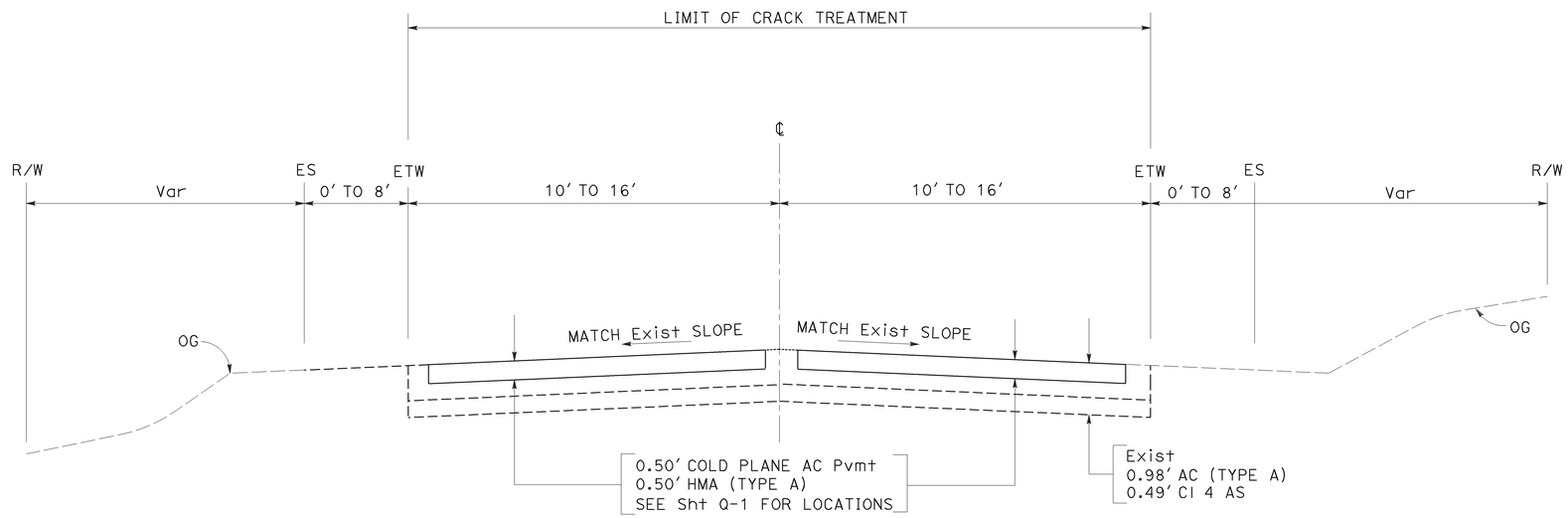

PM R7.4/34.3

TYPICAL CROSS SECTION

NO SCALE

X-1

STATE OF CALIFORNIA - DEPARTMENT OF TRANSPORTATION
Caltrans DESIGN

FUNCTIONAL SUPERVISOR: VIJITH THILAKARATNE
CALCULATED-DESIGNED BY: BINH HONG
CHECKED BY: SIEGFRIED LOGAN
REVISED BY: BH
DATE REVISED: 01/25/10

LAST REVISION 01-14-10
DATE PLOTTED => 03-FEB-2010
TIME PLOTTED => 15:05

Dist	COUNTY	ROUTE	POST MILES TOTAL PROJECT	SHEET No.	TOTAL SHEETS
04	Nap	128	R7.4/34.3	3	12

REGISTERED CIVIL ENGINEER 1/14/10 DATE

1-25-10
PLANS APPROVAL DATE

REGISTERED PROFESSIONAL ENGINEER Duc Duy Vo No. 74538 Exp. 12-31-10 CIVIL STATE OF CALIFORNIA

THE STATE OF CALIFORNIA OR ITS OFFICERS OR AGENTS SHALL NOT BE RESPONSIBLE FOR THE ACCURACY OR COMPLETENESS OF SCANNED COPIES OF THIS PLAN SHEET.

STATIONARY MOUNTED CONSTRUCTION AREA SIGNS

SIGN No.	SIGN CODE FEDERAL	SIGN CODE CALIFORNIA	SIGN MESSAGE	PANEL SIZE	No. OF POST AND SIZE	No. OF SIGNS
A	W20-1		ROAD WORK AHEAD	24" x 24"	(ONE) 4" x 4"	9
B	G20-2		END ROAD WORK	36" x 18"	(ONE) 4" x 4"	9
C	G20-1(30)		ROAD CONSTRUCTION NEXT 30 MILES	60" x 36"	(TWO) 4" x 4"	2
D		C40(CA)	TRAFFIC FINES DOUBLED IN CONSTRUCTION ZONE	72" x 36"	(TWO) 4" x 6"	2

NOTE:
LOCATION OF CONSTRUCTION AREA SIGNS ARE APPROXIMATE, EXACT LOCATION OF SIGNS TO BE DETERMINED BY THE ENGINEER.

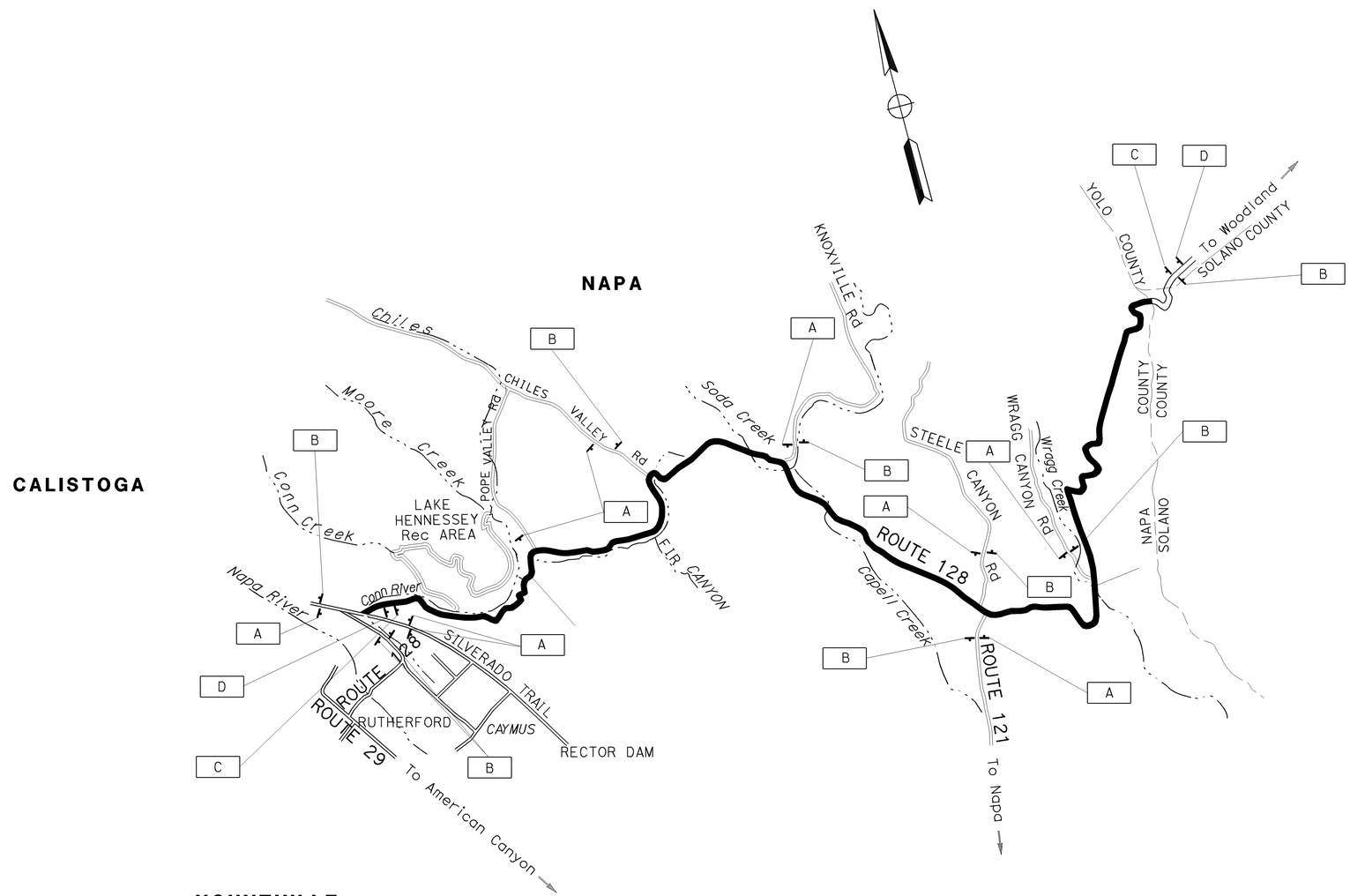

CONSTRUCTION AREA SIGNS

NO SCALE

THIS PLAN ACCURATE FOR CONSTRUCTION AREA SIGN WORK ONLY

CS-1

DV	1/25/10
REVISED BY	DATE REVISED
DUC VO	JERILYN L. STRUVEN
CALCULATED-DESIGNED BY	CHECKED BY
FUNCTIONAL SUPERVISOR	JERILYN L. STRUVEN

STATE OF CALIFORNIA - DEPARTMENT OF TRANSPORTATION
Caltrans
DESIGN

LAST REVISION 12-28-09
DATE PLOTTED => 26-JAN-2010
TIME PLOTTED => 11:20

Dist	COUNTY	ROUTE	POST MILES TOTAL PROJECT	SHEET No.	TOTAL SHEETS
04	Nap	128	R7.4/34.3	4	12

REGISTERED CIVIL ENGINEER 11/24/09 DATE

1-25-10
PLANS APPROVAL DATE

REGISTERED PROFESSIONAL ENGINEER
B.V. Hong
No. 63850
Exp 9-30-10
CIVIL
STATE OF CALIFORNIA

THE STATE OF CALIFORNIA OR ITS OFFICERS OR AGENTS SHALL NOT BE RESPONSIBLE FOR THE ACCURACY OR COMPLETENESS OF SCANNED COPIES OF THIS PLAN SHEET.

NOTE

ALL EXISTING PAVEMENT DELINEATION REMOVED SHALL BE REPLACED AT THE SAME LOCATION AS THE EXISTING.

PAVEMENT DELINEATION QUANTITIES

PM	DIRECTION	DETAIL No.	THERMOPLASTIC TRAFFIC STRIPE		PAVEMENT MARKERS RETROREFLECTIVE	
			4'' YELLOW	4'' WHITE	TYPE D	*TYPE D RECESSED
			LF		EA	
R7.4/34.3	EB	22	3930		140	1409
		27B		3930		
34.4/R7.4	WB	22	4190		153	1409
		27B		4190		
SUBTOTAL			8120	8120	293	2818
TOTAL			16240		293	2818

* RECESSED RETROREFLECTIVE MARKERS TO BE PLACED CONTINUOUSLY FROM PM 27.9 TO PM 34.3

PAVEMENT DELINEATION QUANTITIES

PDQ-1

REVISED BY	BH
DATE REVISED	1/25/10
BINH HONG	SIEGFRIED LOGAN
CALCULATED-DESIGNED BY	
CHECKED BY	
FUNCTIONAL SUPERVISOR	VIJITH THILAKARATNE

STATE OF CALIFORNIA - DEPARTMENT OF TRANSPORTATION
Caltrans
DESIGN

LAST REVISION 01-14-10 | DATE PLOTTED => 28-JAN-2010 | TIME PLOTTED => 11:20

Dist	COUNTY	ROUTE	POST MILES TOTAL PROJECT	SHEET No.	TOTAL SHEETS
04	Nap	128	R7.4/34.3	5	12

REGISTERED CIVIL ENGINEER 1/14/10 DATE

1-25-10
PLANS APPROVAL DATE

REGISTERED PROFESSIONAL ENGINEER B.V. Hong No. 63850 Exp. 9-30-10 CIVIL STATE OF CALIFORNIA

THE STATE OF CALIFORNIA OR ITS OFFICERS OR AGENTS SHALL NOT BE RESPONSIBLE FOR THE ACCURACY OR COMPLETENESS OF SCANNED COPIES OF THIS PLAN SHEET.

ROADWAY QUANTITIES

LOCATION		LENGTH (N)	WIDTH (N)	COLD PLANE AC PAVEMENT	HOT MIX ASPHALT (TYPE A)	TACK COAT
PM	DIRECTION	LF		SQYD	TON	
7.4	EB	50	12	66.7	22.4	0.03
7.9		100	10	111.1	37.4	0.05
8.2		50	10	55.6	18.7	0.02
8.3		50	10	55.6	18.7	0.02
9.0		50	10	55.6	18.7	0.02
9.1		50	10	55.6	18.7	0.02
9.4		150	10	166.7	56.1	0.07
9.6		200	10	222.2	74.8	0.09
9.9		200	10	222.2	74.8	0.09
10.0		250	10	277.8	93.5	0.12
10.2		50	10	55.6	18.7	0.02
10.4		50	10	55.6	18.7	0.02
10.5		50	10	55.6	18.7	0.02
10.6		150	10	166.7	56.1	0.07
10.8		150	10	166.7	56.1	0.07
11.0		60	10	66.7	22.4	0.03
11.1		60	10	66.7	22.4	0.03
12.6		60	10	66.7	22.4	0.03
12.8		60	10	55.6	18.7	0.02
13.7		80	10	88.9	29.9	0.04
14.0		250	10	277.8	93.5	0.12
15.3		250	10	277.8	93.5	0.12
15.5		100	10	111.1	37.4	0.05
15.6		100	10	111.1	37.4	0.05
16.3		80	10	88.9	29.9	0.04
16.4		80	10	88.9	29.9	0.04
16.5		80	10	88.9	29.9	0.04
16.9		50	10	55.6	18.7	0.02
18.2		50	10	55.6	18.7	0.03
20.7		50	12	66.7	22.4	0.03
21.4		50	12	66.7	22.4	0.03
21.6		60	12	80.0	26.9	0.03
22.8		60	12	80.0	26.9	0.03
23.1		60	12	80.0	26.9	0.03
23.8		50	12	66.7	22.4	0.03
25.4		50	12	66.7	22.4	0.03
28.6		150	12	200.0	67.3	0.03
29.7		50	12	66.7	22.4	0.03
30.1		50	12	66.7	22.4	0.03
30.2		50	12	66.7	22.4	0.03
30.5		50	12	66.7	22.4	0.03
30.7		50	12	66.7	22.4	0.03
32.0		50	12	66.7	22.4	0.03
32.1		50	12	66.7	22.4	0.03
32.5		50	12	66.7	22.4	0.03
33.1		50	12	66.7	22.4	0.03
SUBTOTAL EB		3930.0		4596.0	1547	1.91

(N) = NOT A SEPARATE PAY ITEM, FOR INFORMATION ONLY.

ROADWAY QUANTITIES

LOCATION		LENGTH (N)	WIDTH (N)	COLD PLANE AC PAVEMENT	HOT MIX ASPHALT (TYPE A)	TACK COAT
PM	DIRECTION	LF		SQYD	TON	
34.1	WB	50	12	66.7	22.4	0.03
33.9		100	12	133.3	44.9	0.06
33.4		50	12	66.7	22.4	0.03
32.4		50	12	66.7	22.4	0.03
30.9		50	12	66.7	22.4	0.03
30.3		80	12	106.7	35.9	0.04
29.6		50	12	66.7	22.4	0.03
29.1		50	12	66.7	22.4	0.03
28.5		50	12	66.7	22.4	0.03
26.2		150	12	200.0	67.3	0.08
25.9		50	12	66.7	22.4	0.03
24.7		50	12	66.7	22.4	0.03
23.6		50	12	66.7	22.4	0.03
23.5		50	12	66.7	22.4	0.03
19.4		50	12	66.7	22.4	0.03
19.3		150	12	200.0	67.3	0.08
19.2		40	12	53.3	18.0	0.02
19.0		40	12	53.3	18.0	0.02
18.9		40	10	44.4	15.0	0.02
18.8		60	10	66.7	22.4	0.03
18.6		150	10	166.7	56.1	0.07
18.1		150	10	166.7	56.1	0.07
17.7		50	10	55.6	18.7	0.02
17.6		70	10	77.8	26.2	0.03
17.5		70	10	77.8	26.2	0.03
17.3		60	10	66.7	22.4	0.03
17.0		80	10	88.9	29.9	0.04
16.3		200	10	222.2	74.8	0.09
16.1		50	10	55.6	18.7	0.02
16.0		50	10	55.6	18.7	0.02
15.7		150	10	166.7	56.1	0.07
15.6		100	10	111.1	37.4	0.05
14.5		50	10	55.6	18.7	0.02
14.4		50	10	55.6	18.7	0.02
14.3		50	10	55.6	18.7	0.02
14.2		50	10	55.6	18.7	0.02
13.5		100	10	111.1	37.4	0.05
13.4		50	10	55.6	18.7	0.02
13.3		60	10	66.7	22.4	0.03
13.2		100	10	111.1	37.4	0.05
11.3		100	10	111.1	37.4	0.05
11.0		50	10	55.6	18.7	0.02
10.6		60	10	66.7	22.4	0.03
10.5		60	10	66.7	22.4	0.03
10.3		50	10	55.6	18.7	0.02
10.2		50	10	55.6	18.7	0.02
10.0		150	10	166.7	56.1	0.07
9.9		70	10	77.8	26.2	0.03
9.7		150	10	166.7	56.1	0.07
9.5		150	10	166.7	56.1	0.07
8.9		200	10	222.2	74.8	0.09
8.0		150	10	166.7	56.1	0.07
SUBTOTAL WB		4190		4914	1654	2.05
TOTAL EB + WB				9510	3201	3.96

(N) = NOT A SEPARATE PAY ITEM, FOR INFORMATION ONLY.

NOTE

NO RELATED ACTIVITIES SHALL TAKE PLACE WITHIN THE ESA.

ENVIRONMENTALLY SENSITIVE AREAS (N)

PM	DIRECTION	LOCATION
7.0/7.2	EB & WB	SHOULDER

(N) = NOT A SEPARATE PAY ITEM, FOR INFORMATION ONLY.

CRACK TREATMENT

PM	DIRECTION	QUANTITY LNMI
R7.4/34.3	EB & WB	50

SUMMARY OF QUANTITIES

Q-1

REVISED BY	DATE REVISED
BH	1/25/10

BINH HONG — SIEGFRIED LOGAN — CALCULATED-DESIGNED BY — CHECKED BY

FUNCTIONAL SUPERVISOR: VIJITH THILAKARATNE

STATE OF CALIFORNIA - DEPARTMENT OF TRANSPORTATION — DESIGN

LAST REVISION 01-14-10 — DATE PLOTTED => 28-JAN-2010 — TIME PLOTTED => 11:21

DIST	COUNTY	ROUTE	POST MILES TOTAL PROJECT	SHEET NO.	TOTAL SHEETS
04	Nap	128	R7.4/34.3	6	12

Randell D. Hiatt
REGISTERED CIVIL ENGINEER

June 6, 2008
PLANS APPROVAL DATE

REGISTERED PROFESSIONAL ENGINEER
Randell D. Hiatt
No. C50200
Exp. 6-30-09
CIVIL
STATE OF CALIFORNIA

The State of California or its officers or agents shall not be responsible for the accuracy or completeness of electronic copies of this plan sheet.

To accompany plans dated 1-25-10

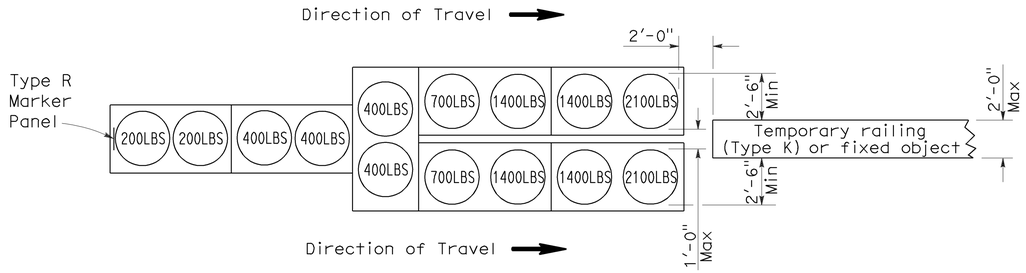

ARRAY 'TU14'

Approach speed 45 mph or more

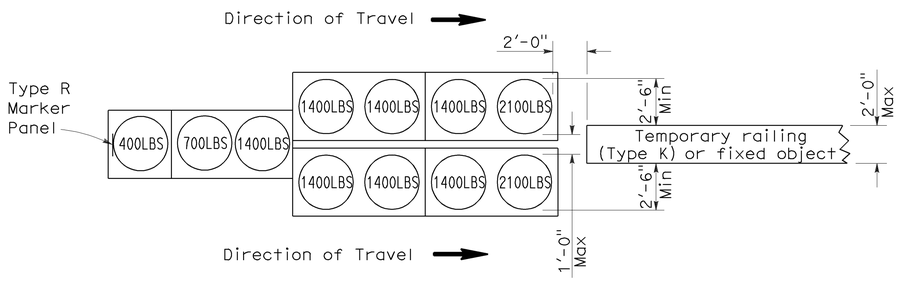

ARRAY 'TU11'

Approach speed less than 45 mph

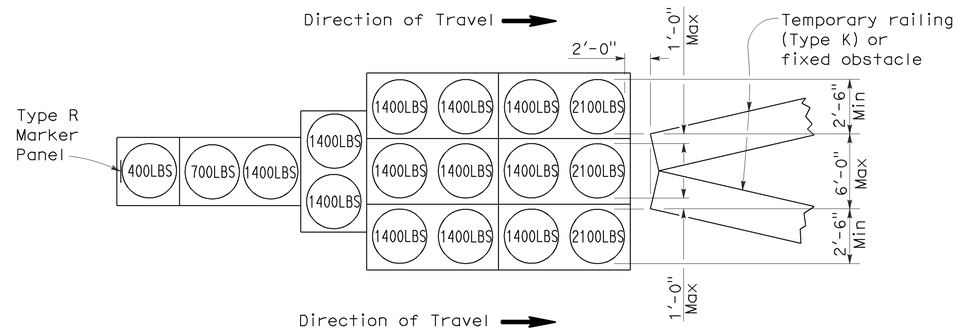

ARRAY 'TU17'

Approach speed less than 45 mph

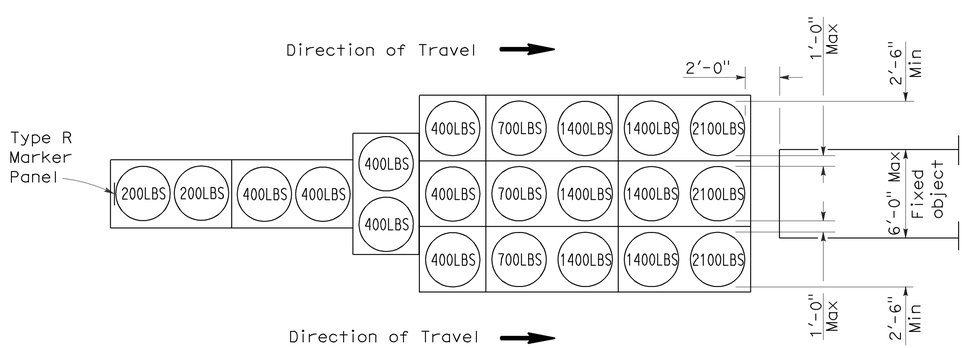

ARRAY 'TU21'

Approach speed 45 mph or more

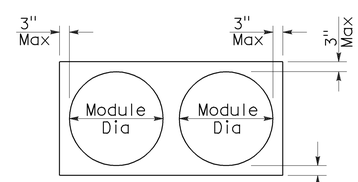

PLAN

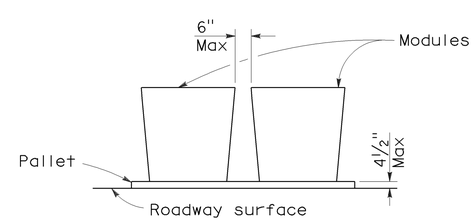

ELEVATION

CRASH CUSHION PALLET DETAIL

See Note 7

NOTES:

1. (XXX) Indicates sand filled module location and weight of sand in pounds for each module. Module spacing is based on the greater diameter of the module.
2. All sand weights are nominal.
3. Temporary crash cushion arrays shall not encroach on the traveled way.
4. Place the top of Type R marker panel 1" below the module lid.
5. Refer to Standard Plan A73B for marker details.
6. Approach speeds indicated conform to NCHRP 350 Report criteria.
7. Use of pallets is optional.

STATE OF CALIFORNIA
DEPARTMENT OF TRANSPORTATION

TEMPORARY CRASH CUSHION, SAND FILLED (UNIDIRECTIONAL)

NO SCALE

RSP T1A DATED JUNE 6, 2008 SUPERSEDES STANDARD PLAN T1A
DATED MAY 1, 2006 - PAGE 211 OF THE STANDARD PLANS BOOK DATED MAY 2006.

REVISED STANDARD PLAN RSP T1A

2006 REVISED STANDARD PLAN RSP T1A

DIST	COUNTY	ROUTE	POST MILES TOTAL PROJECT	SHEET NO.	TOTAL SHEETS
04	Nap	128	R7.4/34.3	7	12

Randell D. Hiatt
REGISTERED CIVIL ENGINEER

June 6, 2008
PLANS APPROVAL DATE

REGISTERED PROFESSIONAL ENGINEER
Randell D. Hiatt
No. C50200
Exp. 6-30-09
CIVIL
STATE OF CALIFORNIA

The State of California or its officers or agents shall not be responsible for the accuracy or completeness of electronic copies of this plan sheet.

To accompany plans dated 1-25-10

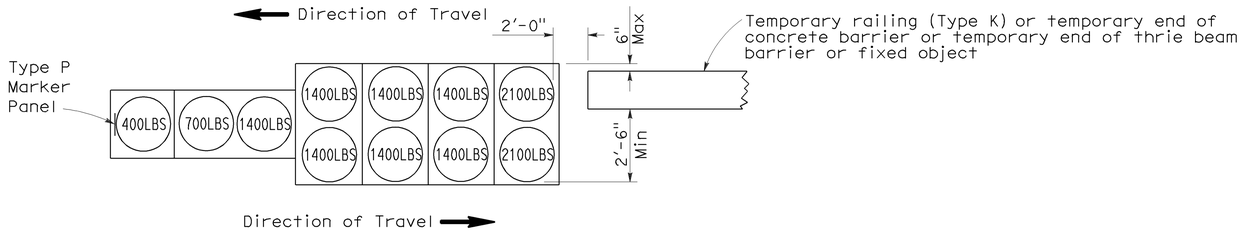

ARRAY 'TB11'

Approach speed less than 45 mph

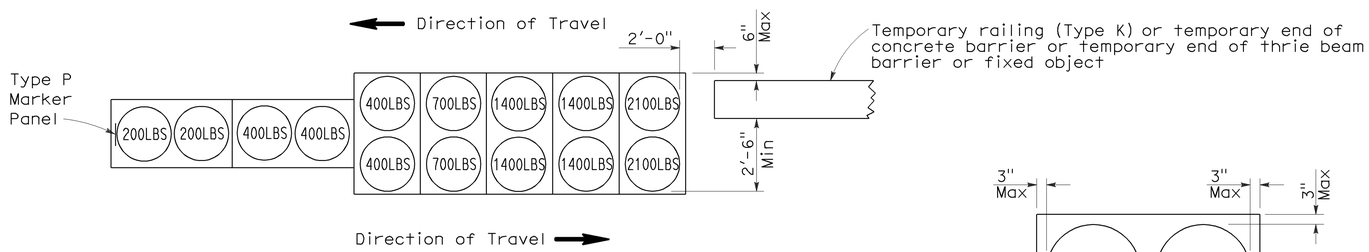

ARRAY 'TB14'

Approach speed 45 mph or more

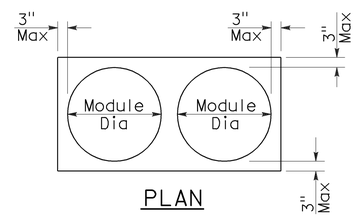

PLAN

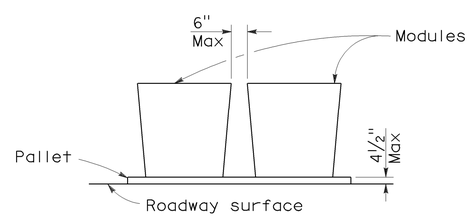

ELEVATION

CRASH CUSHION PALLET DETAIL

See Note 7

NOTES:

1. (XXX) Indicates sand filled module location and weight of sand in pounds for each module. Module spacing is based on the greater diameter of the module.
2. All sand weights are nominal.
3. Temporary crash cushion arrays shall not encroach on the traveled way.
4. Place the Type P marker panel so that the bottom of the panel rests upon the pallet.
5. Refer to Standard Plan A73B for marker details.
6. Approach speeds indicated conform to NCHRP 350 Report criteria.
7. Use of pallets is optional.

STATE OF CALIFORNIA
DEPARTMENT OF TRANSPORTATION

TEMPORARY CRASH CUSHION, SAND FILLED (BIDIRECTIONAL)

NO SCALE

RSP T1B DATED JUNE 6, 2008 SUPERSEDES STANDARD PLAN T1B
DATED MAY 1, 2006 - PAGE 212 OF THE STANDARD PLANS BOOK DATED MAY 2006.

REVISED STANDARD PLAN RSP T1B

2006 REVISED STANDARD PLAN RSP T1B

5-15-08

DIST	COUNTY	ROUTE	POST MILES TOTAL PROJECT	SHEET NO.	TOTAL SHEETS
04	Nap	128	R7.4/34.3	8	12

Randell D. Hiatt
REGISTERED CIVIL ENGINEER

June 6, 2008
PLANS APPROVAL DATE

REGISTERED PROFESSIONAL ENGINEER
Randell D. Hiatt
No. C50200
Exp. 6-30-09
CIVIL
STATE OF CALIFORNIA

The State of California or its officers or agents shall not be responsible for the accuracy or completeness of electronic copies of this plan sheet.

To accompany plans dated 1-25-10

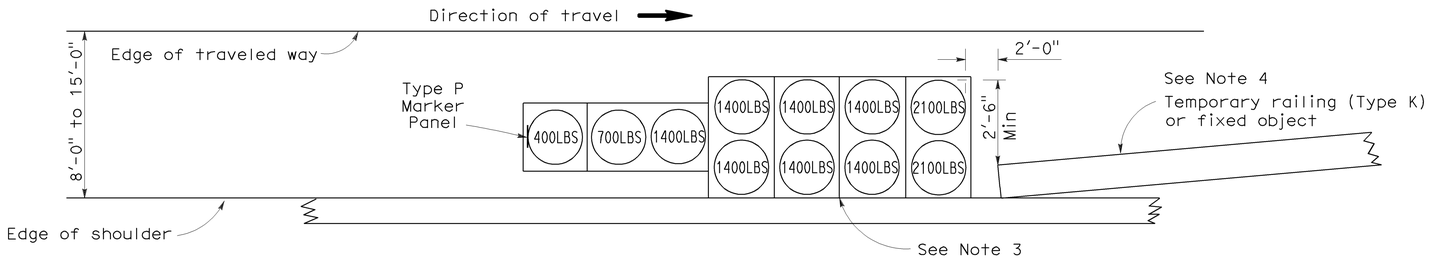

ARRAY 'TS11'

Approach speed less than 45 mph
See Note 9

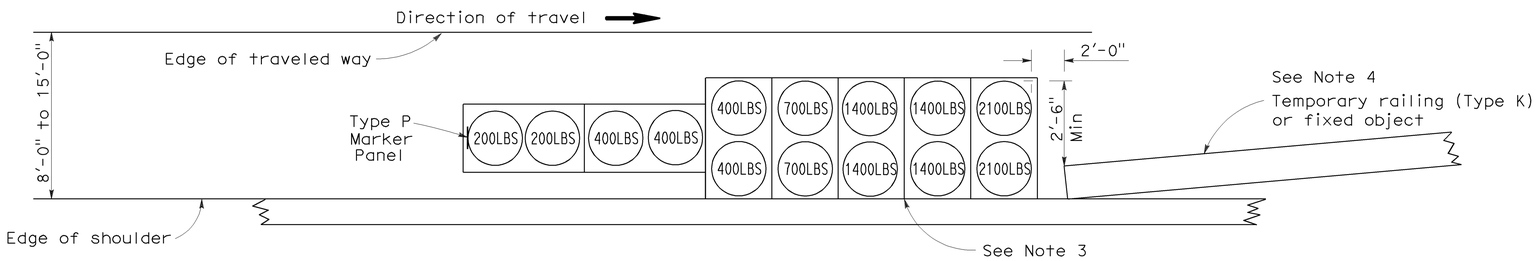

ARRAY 'TS14'

Approach speed 45 mph or more
See Note 9

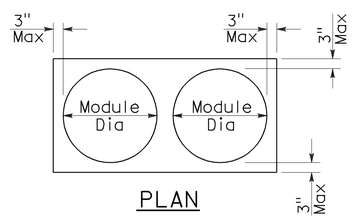

PLAN

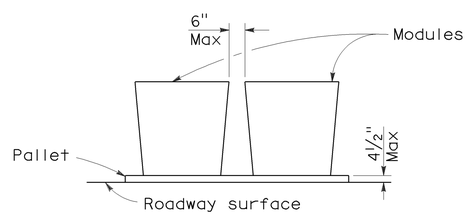

ELEVATION

CRASH CUSHION PALLET DETAIL

See Note 11

NOTES:

1. (XXX) Indicates sand filled module location and weight of sand in pounds for each module. Module spacing is based on the greater diameter of the module.
2. All sand weights are nominal.
3. The temporary crash cushion arrays shown on this plan shall be used only in locations where there will be traffic on one side of the temporary crash cushion array.
4. If the fixed object or approach end of the temporary railing is less than 15'-0" from the edge of traveled way, a temporary crash cushion is required in a construction or work zone.
5. Temporary crash cushion arrays shall not encroach on the traveled way.
6. Arrays for median shoulders shall conform to details shown on this plan for outside shoulders.
7. Place the Type P marker panel so that the bottom of the panel rests upon the pallet and faces traffic.
8. Refer to Standard Plan A73B for marker details.
9. For shoulder widths less than 8'-0", appropriate approved crash cushion protection, other than sand filled modules, shall be provided at fixed objects and at approach ends of temporary railing. The specific type of crash cushion shall be as shown on the project plans or as specified in the Special Provisions, or if not shown on the project plans or specified in the Special Provisions, shall be as approved by the Engineer.
10. Approach speeds indicated conform to NCHRP 350 Report criteria.
11. Use of pallets is optional.

STATE OF CALIFORNIA
DEPARTMENT OF TRANSPORTATION

TEMPORARY CRASH CUSHION, SAND FILLED (SHOULDER INSTALLATIONS)

NO SCALE

RSP T2 DATED JUNE 6, 2008 SUPERSEDES STANDARD PLAN T2
DATED MAY 1, 2006 - PAGE 213 OF THE STANDARD PLANS BOOK DATED MAY 2006.

REVISED STANDARD PLAN RSP T2

2006 REVISED STANDARD PLAN RSP T2

5-15-08

DIST	COUNTY	ROUTE	POST MILES TOTAL PROJECT	SHEET NO.	TOTAL SHEETS
04	Nap	128	R7.4/34.3	9	12

LICENSED LANDSCAPE ARCHITECT

August 15, 2008
PLANS Approval DATE

The State of California or its officers or agents shall not be responsible for the accuracy or completeness of electronic copies of this plan sheet.

LICENSED LANDSCAPE ARCHITECT
Robert B. Schott 3825
Signature
11-04-08
Renewal Date
08-11-08
Date
STATE OF CALIFORNIA

To accompany plans dated 1-25-10

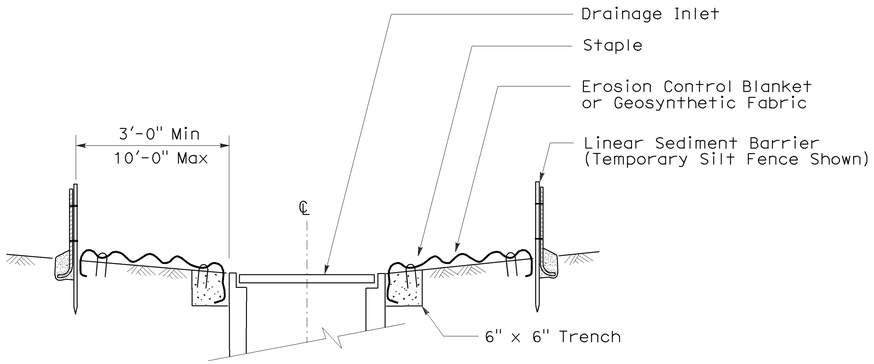

SECTION A-A

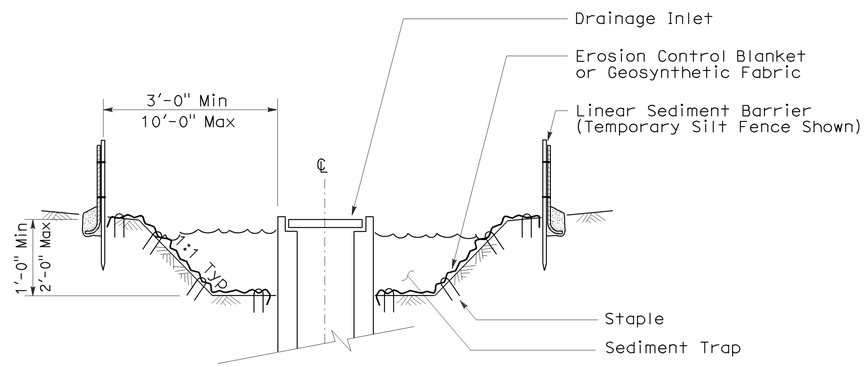

SECTION B-B

NOTES:

1. See Standard Plan T51 for Temporary Silt Fence.
2. Dimensions may vary to fit field conditions.

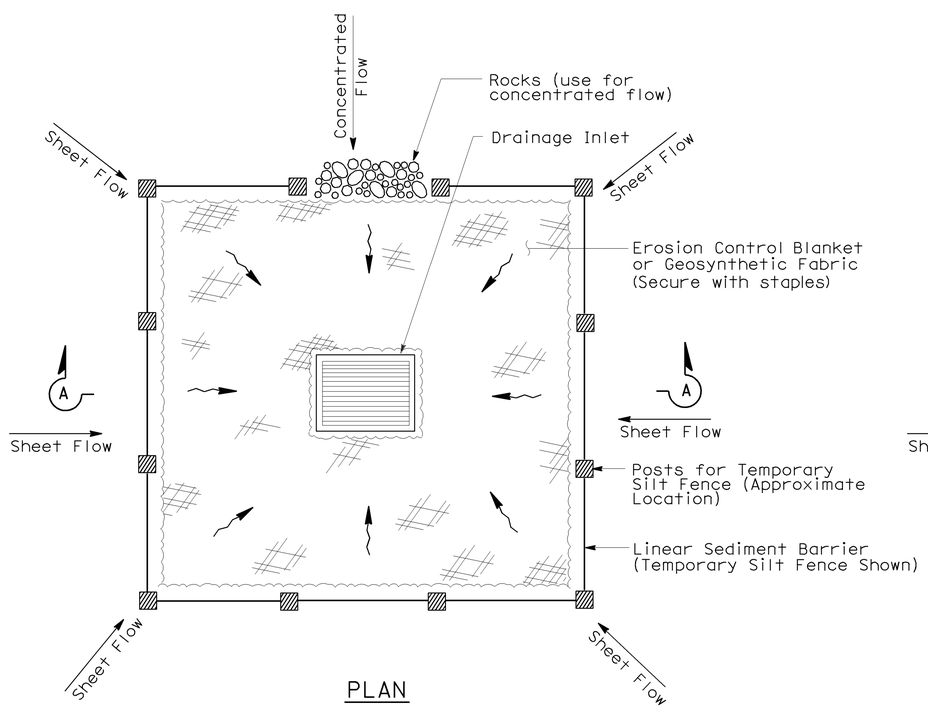

PLAN

TEMPORARY DRAINAGE INLET PROTECTION (TYPE 1)

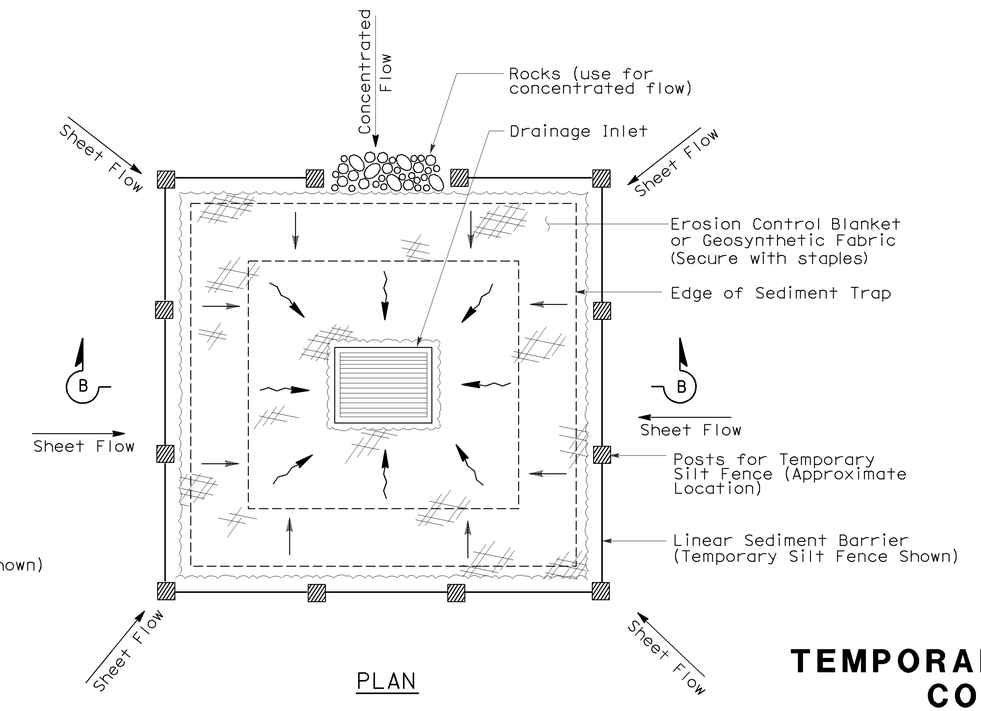

PLAN

TEMPORARY DRAINAGE INLET PROTECTION (TYPE 2) (EXCAVATED SEDIMENT TRAP)

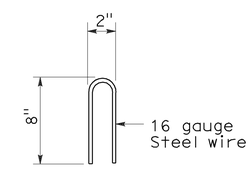

STAPLE DETAIL

STATE OF CALIFORNIA
DEPARTMENT OF TRANSPORTATION

TEMPORARY WATER POLLUTION CONTROL DETAILS (TEMPORARY DRAINAGE INLET PROTECTION)

NO SCALE

Nsp t61 dated august 15, 2008 supplements the standard plans book dated may 2006.

NEW STANDARD PLAN NSP T61

2006 NEW STANDARD PLAN NSP T61

7-11-08

DIST	COUNTY	ROUTE	POST MILES TOTAL PROJECT	SHEET NO.	TOTAL SHEETS
04	Nap	128	R7.4/34.3	10	12

LICENSED LANDSCAPE ARCHITECT

August 15, 2008
PLANS APPROVAL DATE

The State of California or its officers or agents shall not be responsible for the accuracy or completeness of electronic copies of this plan sheet.

LICENSED LANDSCAPE ARCHITECT — Robert B. Schott — Signature — 11-04-08 Renewal Date — 08-11-08 Date — STATE OF CALIFORNIA

To accompany plans dated 1-25-10

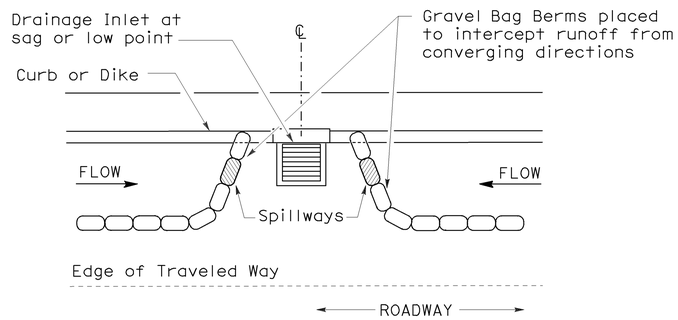

PLAN

CONFIGURATION FOR SAG POINT INLET (GRAVEL BAG BERM)

GRAVEL BAG BERM (TYPE 3A) SPACING TABLE

SLOPE OF ROADWAY (PERCENT)	1 to 3.9	4 to 5.9	6 to 7.9	8 to 10	10+
INTERVAL BETWEEN BERM	100′	75′	50′	25′	12′

For slope of less than 1%, install barriers only if erosion/sediment is prevalent

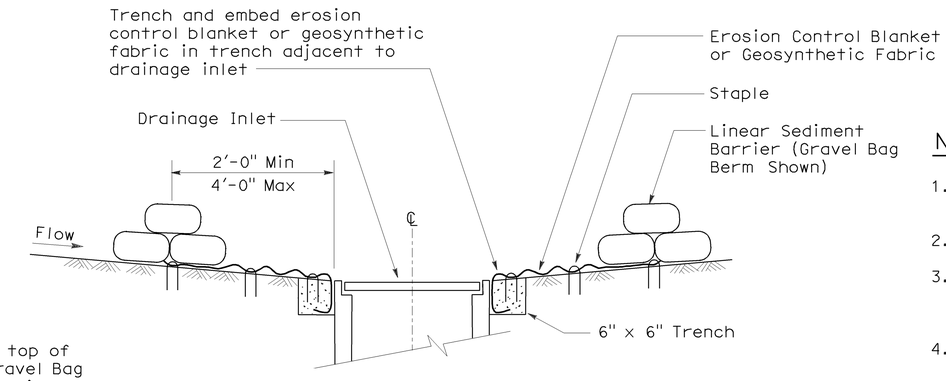

SECTION A-A

NOTES:

1. Place safety cones adjacent to drainage inlet protection.
2. Dimensions may vary to fit field conditions.
3. Install a minimum of 3 gravel bag berms upstream of each drainage inlet to be protected.
4. Position erosion control blanket or geosynthetic fabric at edge of concrete apron and secure in trench.
5. Erosion control blanket or geosynthetic fabric is not required if the area adjacent to the drainage inlet is vegetated or paved.

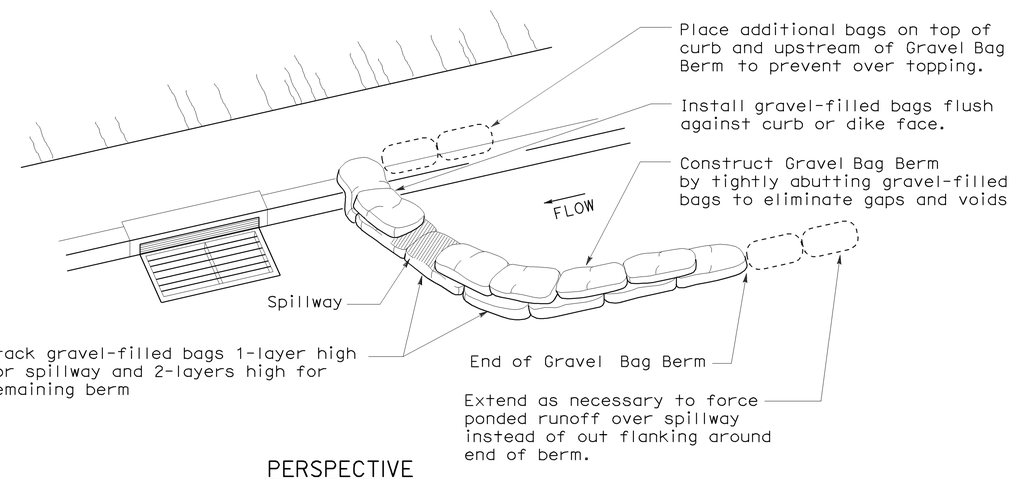

PERSPECTIVE

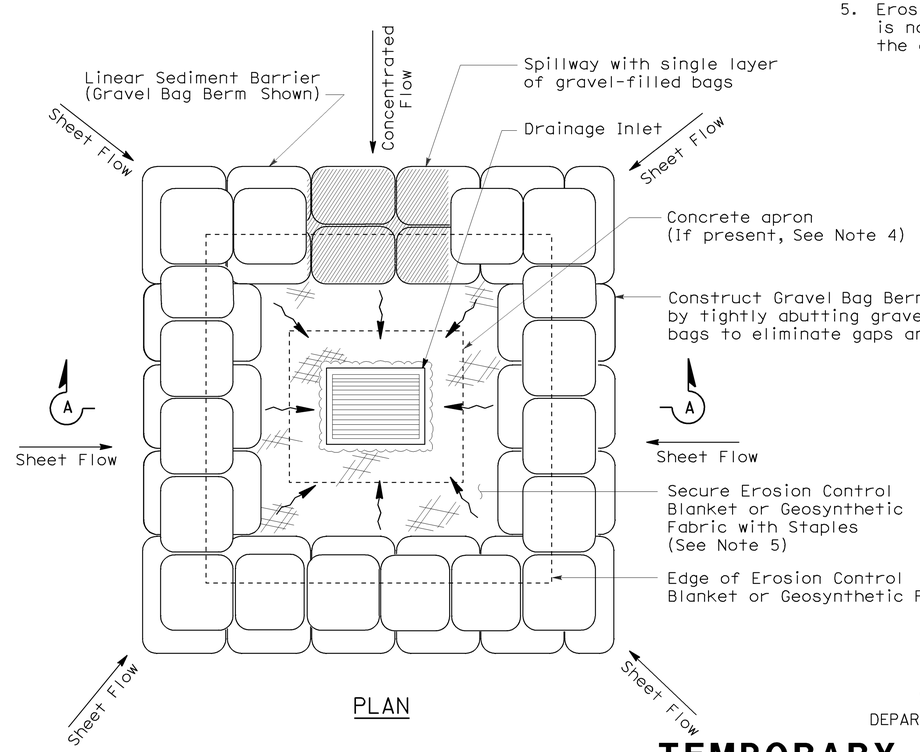

PLAN

TEMPORARY DRAINAGE INLET PROTECTION (TYPE 3B)

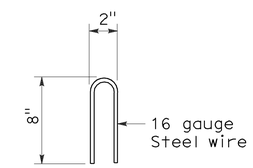

STAPLE DETAIL

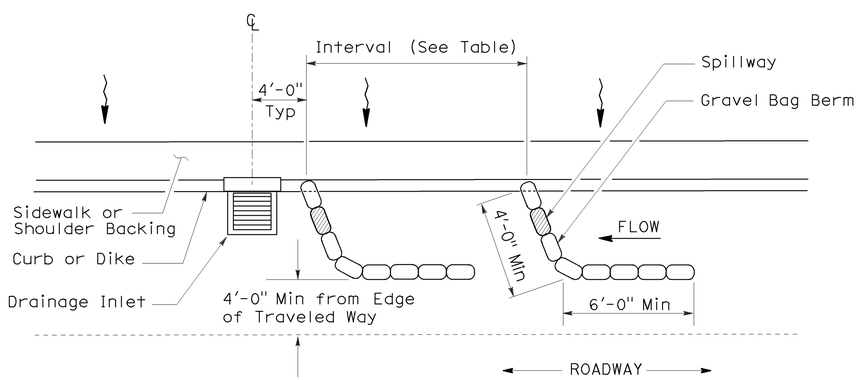

PLAN

TEMPORARY DRAINAGE INLET PROTECTION (TYPE 3A) (GRAVEL BAG BERM)

STATE OF CALIFORNIA
DEPARTMENT OF TRANSPORTATION

TEMPORARY WATER POLLUTION CONTROL DETAILS (TEMPORARY DRAINAGE INLET PROTECTION)

NO SCALE

NSP T62 DATED AUGUST 15, 2008 SUPPLEMENTS THE STANDARD PLANS BOOK DATED MAY 2006.

NEW STANDARD PLAN NSP T62

2006 NEW STANDARD PLAN NSP T62

7-11-08

DIST	COUNTY	ROUTE	POST MILES TOTAL PROJECT	SHEET NO.	TOTAL SHEETS
04	Nap	128	R7.4/34.3	11	12

Robert B Schott
LICENSED LANDSCAPE ARCHITECT

August 15, 2008
PLANS APPROVAL DATE

LICENSED LANDSCAPE ARCHITECT
Robert B. Schott 3695
Robert B Schott
Signature
11-04-08
Renewal Date
08-11-08
Date
STATE OF CALIFORNIA

The State of California or its officers or agents shall not be responsible for the accuracy or completeness of electronic copies of this plan sheet.

To accompany plans dated 1-25-10

FLEXIBLE SEDIMENT BARRIER SPACING TABLE

SLOPE OF ROADWAY (PERCENT)	0 to 0.9	1 to 1.9	2 to 2.9	3 to 4	5+
INTERVAL BETWEEN BARRIERS	50′	35′	30′	25′	20′
ANGLE FROM FACE OF CURB	70°	70°	70°	45°	45°
SUGGESTED BARRIER LENGTH	6′	6′	6′	6′	6′

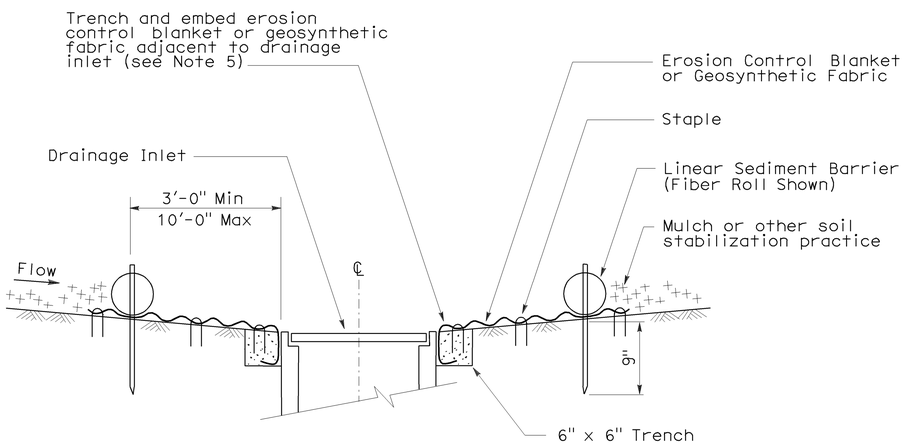

SECTION A-A

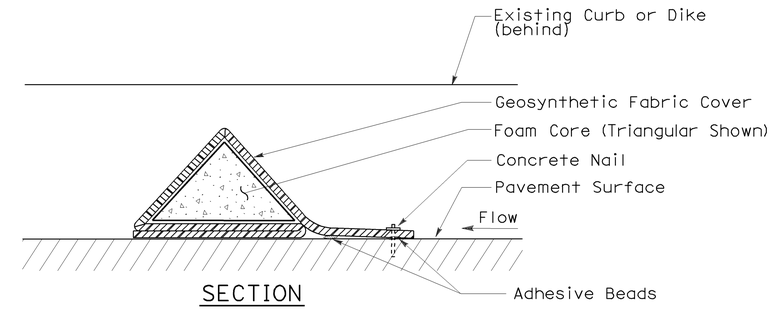

SECTION

FLEXIBLE SEDIMENT BARRIER DETAIL (FOAM BARRIER SHOWN)

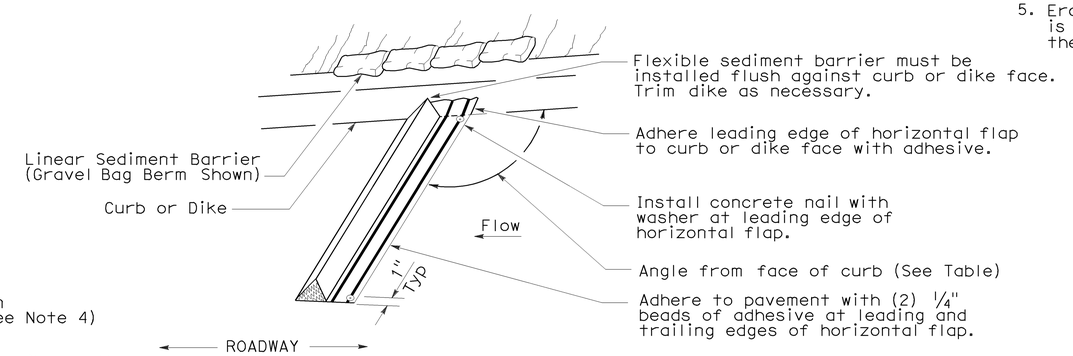

PERSPECTIVE

NOTES:

1. See Standard Plan T51 for Temporary Silt Fence.
2. Dimensions may vary to fit field conditions.
3. Install a minimum of 3 flexible sediment barriers upstream of each drainage inlet to be protected.
4. Position erosion control blanket or geosynthetic fabric at edge of concrete apron and secure in trench.
5. Erosion control blanket or geosynthetic fabric is not required if the area adjacent to the drainage inlet is vegetated.

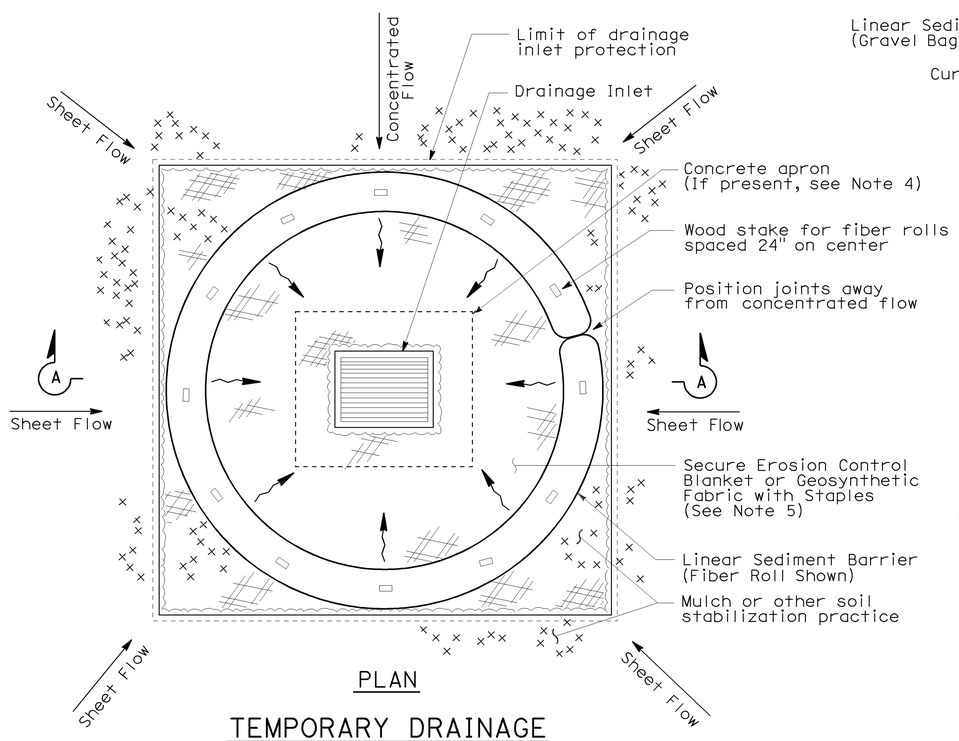

PLAN

TEMPORARY DRAINAGE INLET PROTECTION (TYPE 4A)

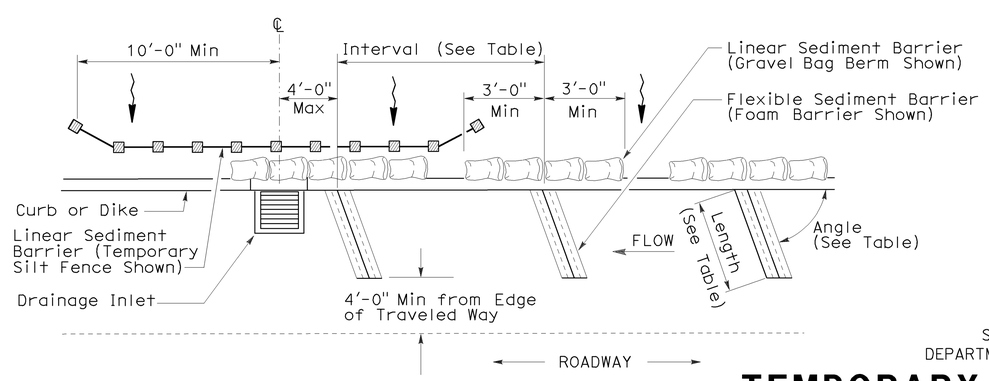

PLAN

TEMPORARY DRAINAGE INLET PROTECTION (TYPE 4B) FLEXIBLE SEDIMENT BARRIER

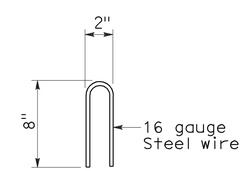

STAPLE DETAIL

STATE OF CALIFORNIA
DEPARTMENT OF TRANSPORTATION

TEMPORARY WATER POLLUTION CONTROL DETAILS (TEMPORARY DRAINAGE INLET PROTECTION)

NO SCALE

NSP T63 DATED AUGUST 15, 2008 SUPPLEMENTS
THE STANDARD PLANS BOOK DATED MAY 2006.

NEW STANDARD PLAN NSP T63

2006 NEW STANDARD PLAN NSP T63

7-11-08

DIST	COUNTY	ROUTE	POST MILES TOTAL PROJECT	SHEET NO.	TOTAL SHEETS
04	Nap	128	R7.4/34.3	12	12

LICENSED LANDSCAPE ARCHITECT

August 15, 2008
PLANS APPROVAL DATE

The State of California or its officers or agents shall not be responsible for the accuracy or completeness of electronic copies of this plan sheet.

LICENSED LANDSCAPE ARCHITECT — Robert B. Schott 3825 — Signature — 11-04-08 Renewal Date — 08-11-08 Date — STATE OF CALIFORNIA

To accompany plans dated 1-25-10

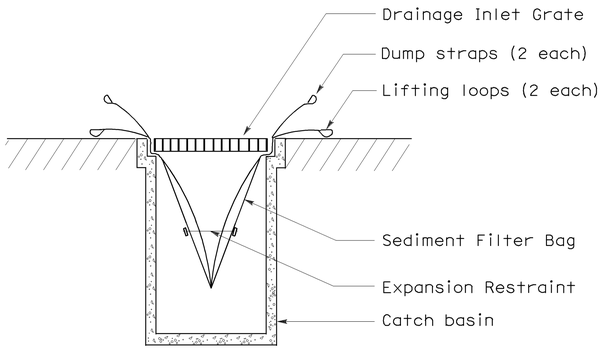

SECTION B-B

SEDIMENT FILTER BAG DETAIL

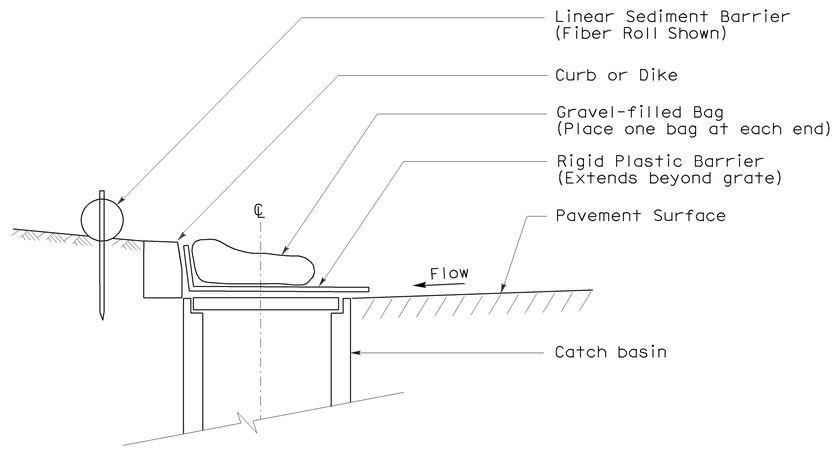

SECTION

TEMPORARY DRAINAGE INLET PROTECTION (TYPE 6A) (CATCH BASIN WITH GRATE)

NOTES:

1. See Standard Plan T51 for Temporary Silt Fence.
2. Dimensions may vary to fit field conditions.

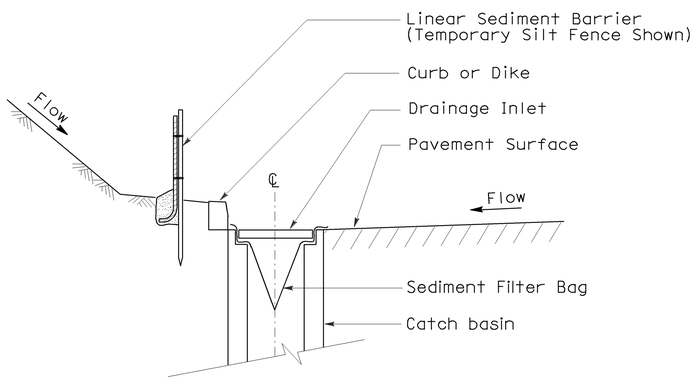

SECTION A-A

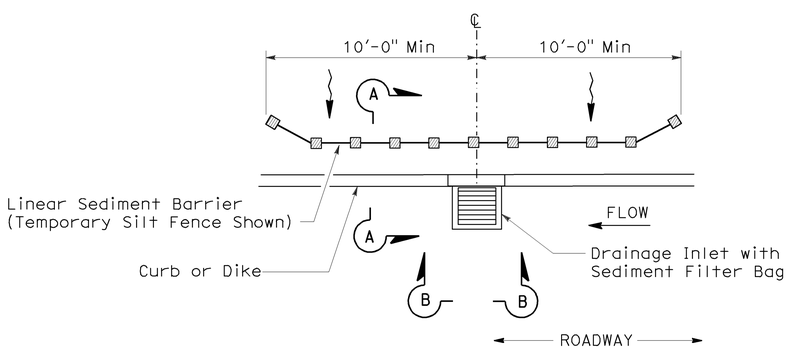

PLAN

TEMPORARY DRAINAGE INLET PROTECTION (TYPE 5) (SEDIMENT FILTER BAG)

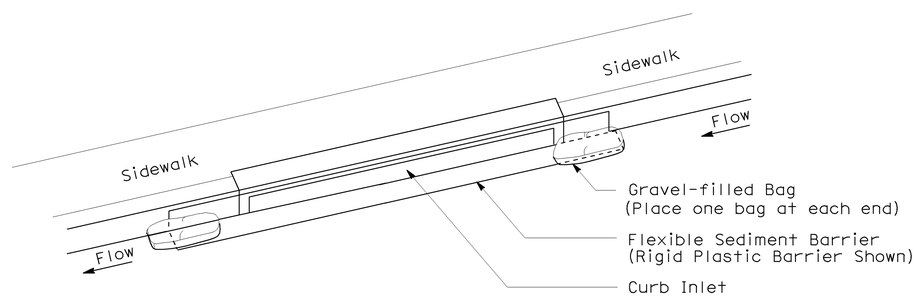

PERSPECTIVE

TEMPORARY DRAINAGE INLET PROTECTION (TYPE 6B) (CURB INLET WITHOUT GRATE)

STATE OF CALIFORNIA
DEPARTMENT OF TRANSPORTATION

TEMPORARY WATER POLLUTION CONTROL DETAILS (TEMPORARY DRAINAGE INLET PROTECTION)

NO SCALE

NSP T64 DATED AUGUST 15, 2008 SUPPLEMENTS
THE STANDARD PLANS BOOK DATED MAY 2006.

NEW STANDARD PLAN NSP T64

2006 NEW STANDARD PLAN NSP T64

7-11-08