ACBHIM-ACIM-280-1(133)E

Dist	COUNTY	ROUTE	POST MILES TOTAL PROJECT	SHEET No.	TOTAL SHEETS
04	SM	280	10.7/11.0	1	83

STATE OF CALIFORNIA

DEPARTMENT OF TRANSPORTATION

PROJECT PLANS FOR CONSTRUCTION ON

STATE HIGHWAY

IN SAN MATEO COUNTY
NEAR SAN MATEO AND BELMONT
FROM 0.1 MILE SOUTH
TO 0.2 MILE NORTH OF ROUTE 280/92 SEPARATION

TO BE SUPPLEMENTED BY STANDARD PLANS DATED MAY 2006

INDEX OF PLANS

SHEET No.	DESCRIPTION
1	TITLE AND LOCATION MAP
2	LAYOUT
3-4	CONSTRUCTION DETAILS
5-6	EROSION CONTROL PLANS AND QUANTITIES
7-11	CONSTRUCTION AREA SIGNS
12-16	TRAFFIC HANDLING PLANS
17-20	PAVEMENT DELINEATION PLANS AND QUANTITIES
21-22	SUMMARY OF QUANTITIES
23-24	ELECTRICAL PLANS
25-42	REVISED AND NEW STANDARD PLANS

STRUCTURE PLANS

43-63	N280/W92 CONNECTOR OC (RETROFIT), Br No. 35-0244G
64-83	S280/E92 CONNECTOR OC (RETROFIT), Br No. 35-0245F

THE STANDARD PLANS LIST APPLICABLE TO THIS CONTRACT IS INCLUDED IN THE NOTICE TO BIDDERS AND SPECIAL PROVISIONS BOOK.

LOCATION MAP

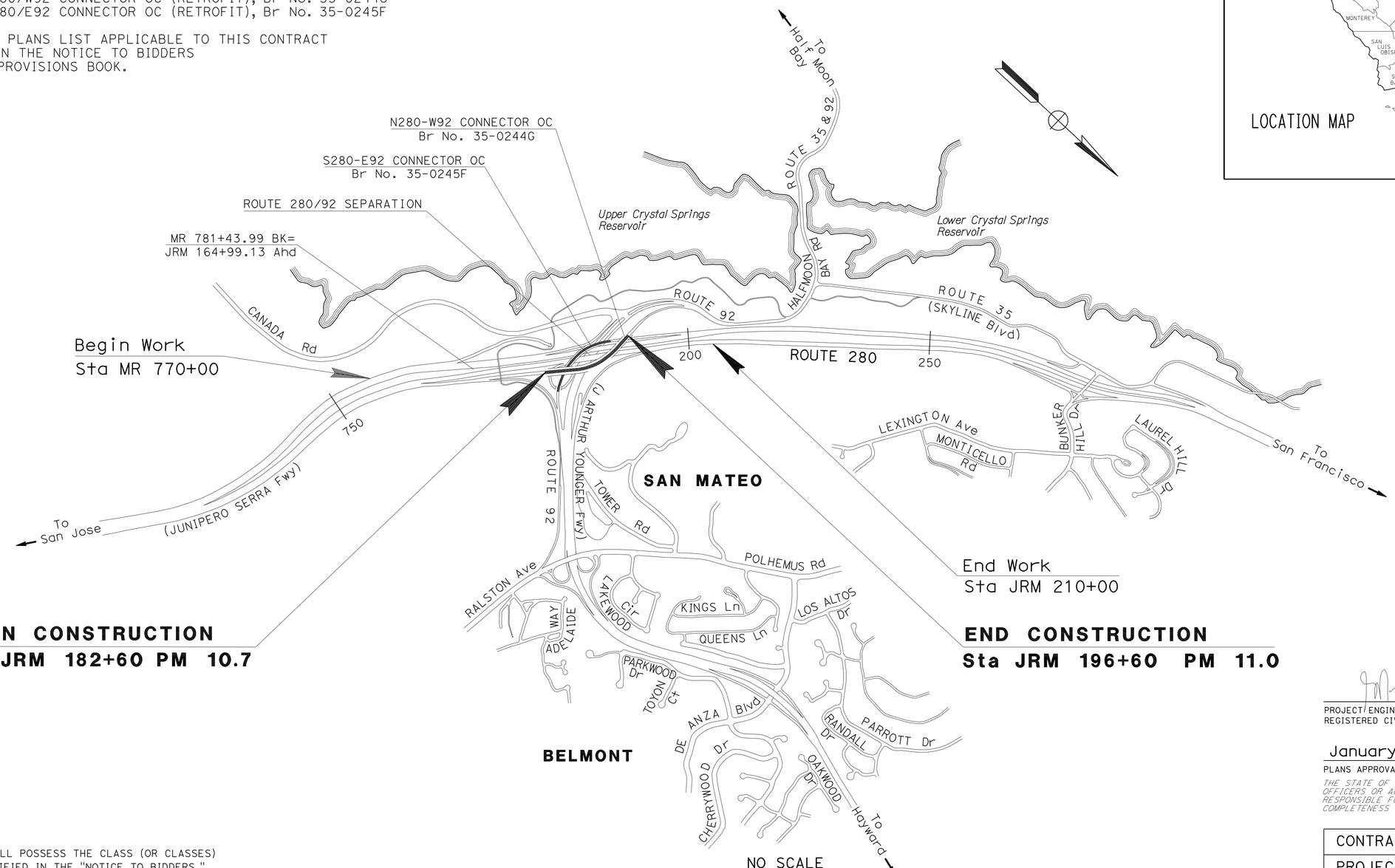

BEGIN CONSTRUCTION
Sta JRM 182+60 PM 10.7

END CONSTRUCTION
Sta JRM 196+60 PM 11.0

THE CONTRACTOR SHALL POSSESS THE CLASS (OR CLASSES) OF LICENSE AS SPECIFIED IN THE "NOTICE TO BIDDERS."

PROJECT MANAGER: RON MORIGUCHI

DESIGN ENGINEER: GERSY MODESTO

PROJECT ENGINEER / REGISTERED CIVIL ENGINEER — DATE: 12/20/10

REGISTERED PROFESSIONAL ENGINEER — G.B. Modesto — No. 50338 — Exp. 6-30-11 — CIVIL — STATE OF CALIFORNIA

January 18, 2011
PLANS APPROVAL DATE

THE STATE OF CALIFORNIA OR ITS OFFICERS OR AGENTS SHALL NOT BE RESPONSIBLE FOR THE ACCURACY OR COMPLETENESS OF SCANNED COPIES OF THIS PLAN SHEET.

CONTRACT No.	04-1A7704
PROJECT ID	0400000508

LAST REVISION 12-17-10 — DATE PLOTTED => 08-FEB-2011 — TIME PLOTTED => 13:33

Dist	COUNTY	ROUTE	POST MILES TOTAL PROJECT	SHEET No.	TOTAL SHEETS
04	SM	280	10.7/11.0	2	83

REGISTERED CIVIL ENGINEER 12/20/10 DATE

1-18-11
PLANS APPROVAL DATE

REGISTERED PROFESSIONAL ENGINEER G.B. Modesto No. 50338 Exp. 6-30-11 CIVIL STATE OF CALIFORNIA

THE STATE OF CALIFORNIA OR ITS OFFICERS OR AGENTS SHALL NOT BE RESPONSIBLE FOR THE ACCURACY OR COMPLETENESS OF SCANNED COPIES OF THIS PLAN SHEET.

NOTES:

1. SEE CONSTRUCTION DETAILS FOR Conc BARRIER ARCHITECTURAL SURFACE DETAILS.
2. FOR METAL BEAM GUARD RAILING CONNECTIONS TO BRIDGE RAILINGS WITHOUT SIDEWALKS, SEE STANDARD PLAN A77J1.

LEGEND:

- STEEL CASING ON COLUMN
- OVAL COLUMN SECTION ON MICROPILES AND 27′ x 27′ PILE CAP
- OVAL COLUMN SECTION ON MICROPILES AND 34′ x 34′ PILE CAP
- TFESA — TEMPORARY FENCE (TYPE ESA)
- HOT MIX ASPHALT (TYPE A)

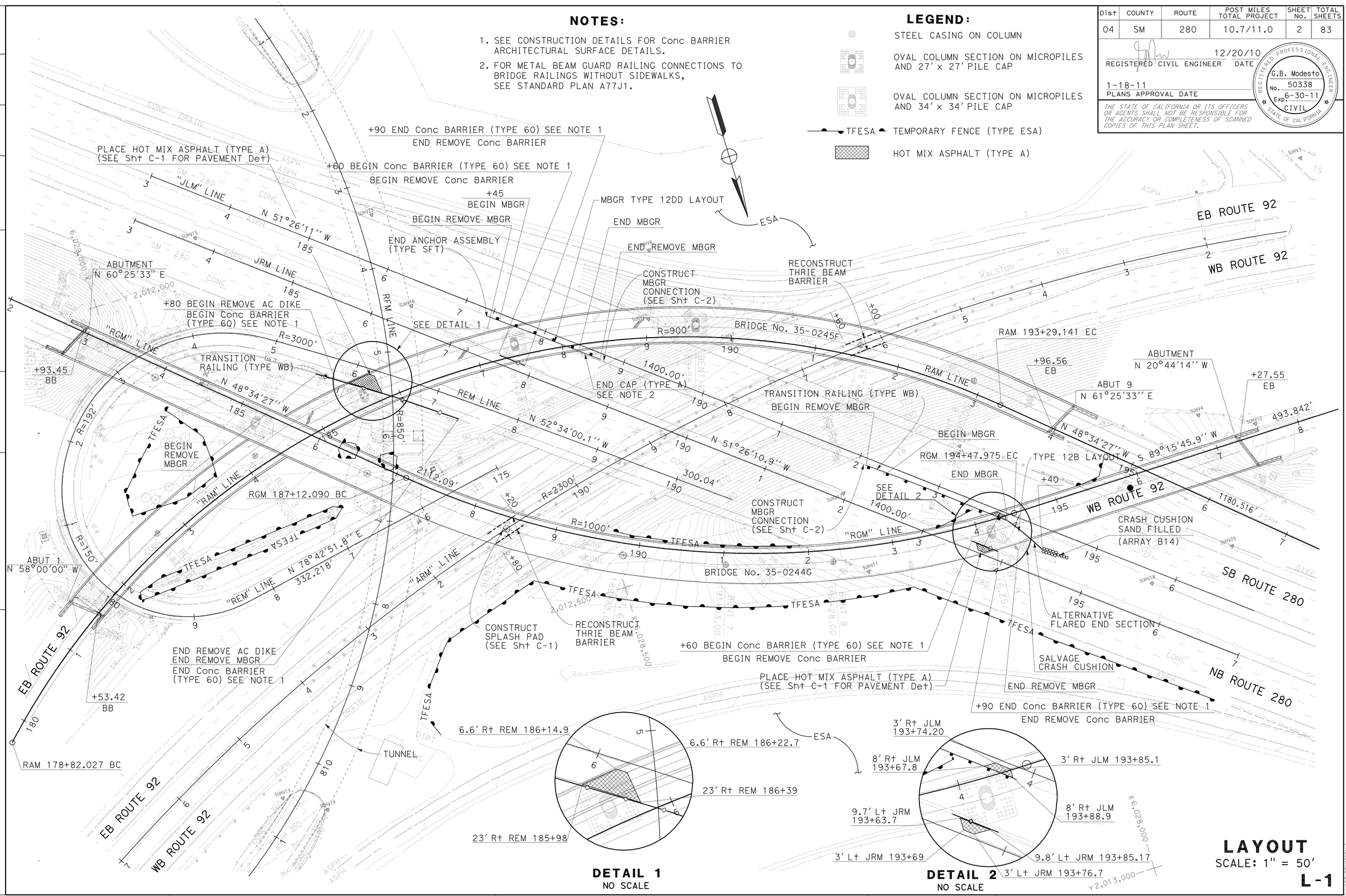

DETAIL 1
NO SCALE

DETAIL 2
NO SCALE

LAYOUT
SCALE: 1" = 50′

L-1

STATE OF CALIFORNIA - DEPARTMENT OF TRANSPORTATION
Caltrans
DESIGN
STUART GOODSON
GERSY MODESTO
DUAT NGUYEN
FUNCTIONAL SUPERVISOR
CALCULATED-DESIGNED BY
CHECKED BY
REVISED BY
DATE REVISED

LAST REVISION DATE PLOTTED => 20-JAN-2011
12-17-10 TIME PLOTTED => 11:41

Dist	COUNTY	ROUTE	POST MILES TOTAL PROJECT	SHEET No.	TOTAL SHEETS
04	SM	280	10.7/11.0	3	83

REGISTERED CIVIL ENGINEER DATE 12/20/10

1-18-11
PLANS APPROVAL DATE

REGISTERED PROFESSIONAL ENGINEER G.B. Modesto No. 50338 Exp. 6-30-11 CIVIL STATE OF CALIFORNIA

THE STATE OF CALIFORNIA OR ITS OFFICERS OR AGENTS SHALL NOT BE RESPONSIBLE FOR THE ACCURACY OR COMPLETENESS OF SCANNED COPIES OF THIS PLAN SHEET.

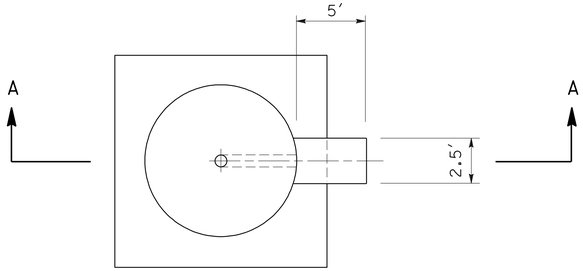

PLAN

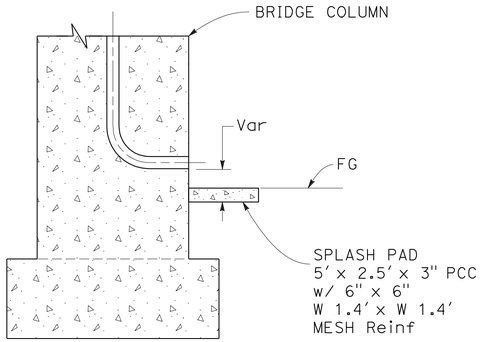

SECTION A-A

SPLASH PAD
AT FACE OF BRIDGE COLUMN

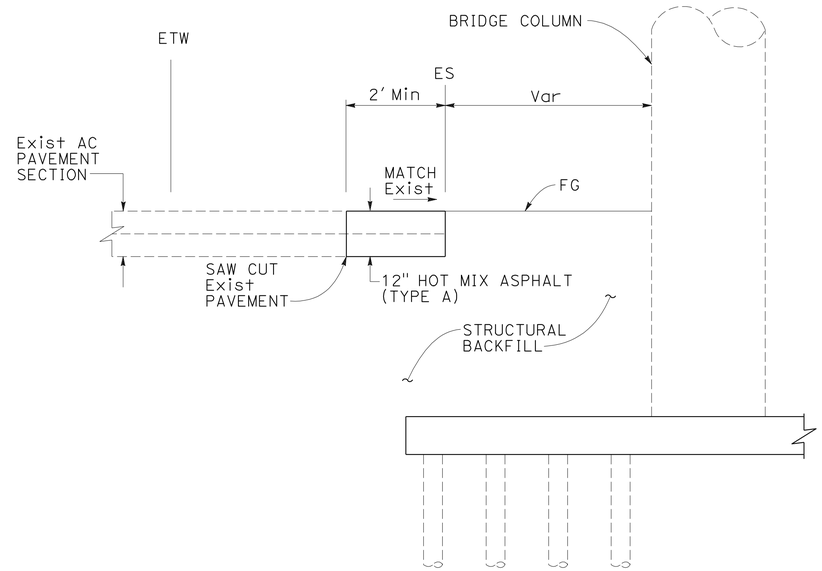

TYPICAL PAVEMENT DETAIL

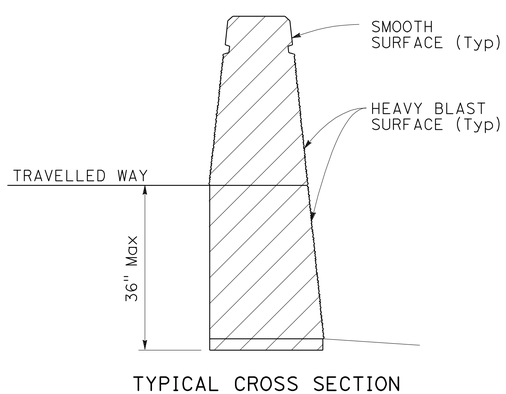

TYPICAL CROSS SECTION
TYPE 60C BARRIER

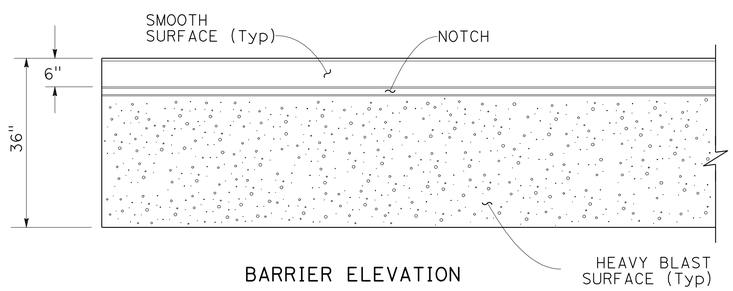

BARRIER ELEVATION

ARCHITECTURAL SURFACE

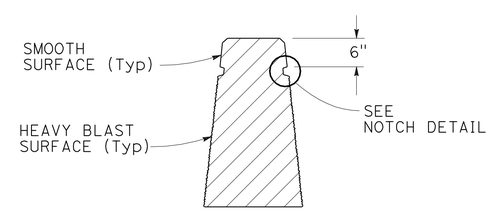

TYPICAL CROSS SECTION
TYPE 60 BARRIER

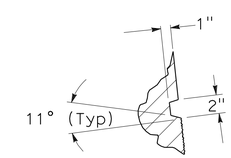

NOTCH DETAIL

CONSTRUCTION DETAILS
NO SCALE

C-1

STATE OF CALIFORNIA - DEPARTMENT OF TRANSPORTATION
Caltrans®
DESIGN
FUNCTIONAL SUPERVISOR: DUAT NGUYEN
CALCULATED-DESIGNED BY: GERSY MODESTO
CHECKED BY: STUART GOODSON
REVISED BY
DATE REVISED

LAST REVISION 12-17-10
DATE PLOTTED => 20-JAN-2011
TIME PLOTTED => 11:41

Dist	COUNTY	ROUTE	POST MILES TOTAL PROJECT	SHEET No.	TOTAL SHEETS
04	SM	280	10.7/11.0	4	83

REGISTERED CIVIL ENGINEER 10-26-10 DATE

1-18-11
PLANS APPROVAL DATE

REGISTERED PROFESSIONAL ENGINEER Phillip E. Lutz No. 50338 Exp. 6-30-11 CIVIL STATE OF CALIFORNIA

THE STATE OF CALIFORNIA OR ITS OFFICERS OR AGENTS SHALL NOT BE RESPONSIBLE FOR THE ACCURACY OR COMPLETENESS OF SCANNED COPIES OF THIS PLAN SHEET.

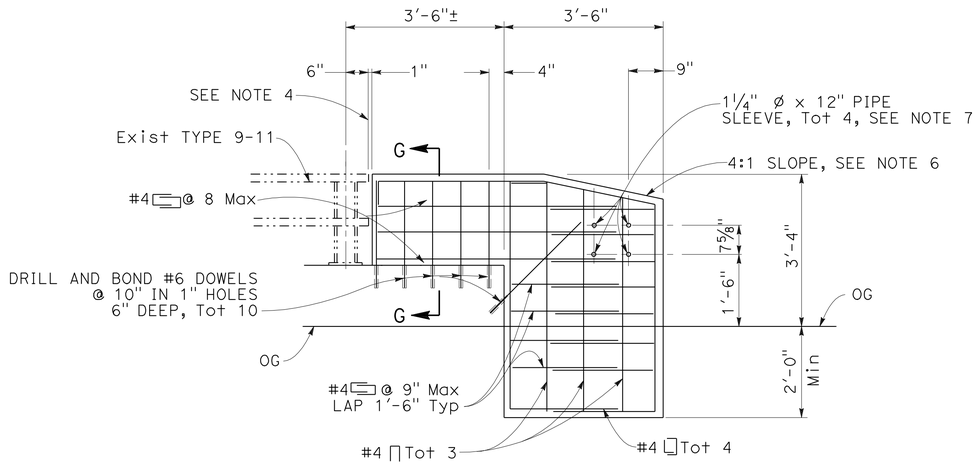

ELEVATION

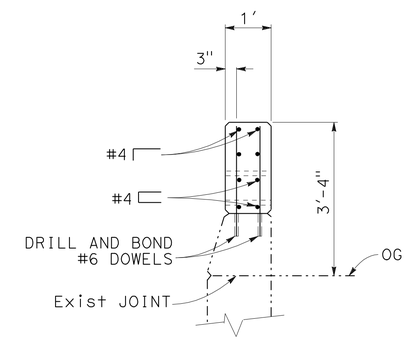

SECTION G-G

MBGR CONNECTION DETAIL

NOTES:

1. FOR DETAILS NOT SHOWN, SEE STANDARD PLANS.
2. DEPENDENT DIMENSIONS WILL BE VERIFIED IN THE FIELD BEFORE FABRICATING ANY END CONNECTION TO CONFORM WITH EXISTING PAVED CONDITIONS.
3. ALL PLATES AND BOLTS ARE GALVANIZED.
4. CUT AND REMOVE THAT PORTION OF TYPE 9-11 AND MBGR AS REQUIRED.
5. IF RAIL IS NOT CONTINUOUS OVER 2 POSTS, USE SPLICE AT EXPANSION JOINT.
6. TAPER THE TOP OF THE END OF THE BRIDGE RAILING AT 4:1 TO MATCH THE TOP ELEVATION OF THE MBGR RAIL ELEMENT.
7. FOR MBGR CONNECTION DETAILS SEE STANDARD PLAN A77J1.

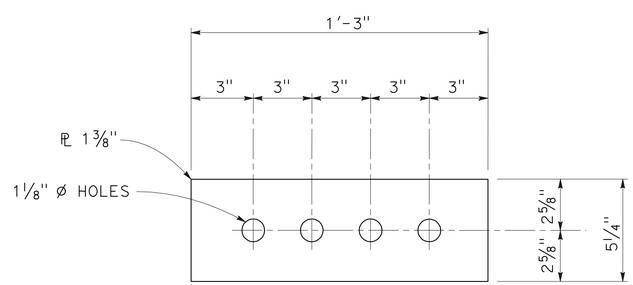

SPLICE PLATE

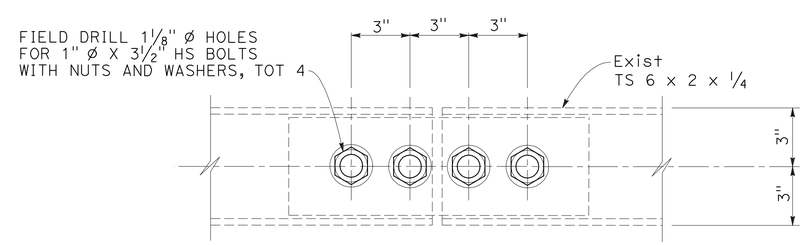

MODIFIED TUBE

RAIL SPLICE DETAILS

SEE NOTE 5

CONSTRUCTION DETAILS

NO SCALE

C-2

REVISED BY | DATE REVISED

CALCULATED-DESIGNED BY | CHECKED BY

FUNCTIONAL SUPERVISOR

STATE OF CALIFORNIA - DEPARTMENT OF TRANSPORTATION

Caltrans®

DESIGN

LAST REVISION 12-17-10 | DATE PLOTTED => 20-JAN-2011 | TIME PLOTTED => 11:42

Dist	COUNTY	ROUTE	POST MILES TOTAL PROJECT	SHEET No.	TOTAL SHEETS
04	SM	280	10.7/11.0	5	83

LICENSED LANDSCAPE ARCHITECT

1-18-11
PLANS APPROVAL DATE

LICENSED LANDSCAPE ARCHITECT — LAURIE J. SMITH — No. 4366 — signature — 08-31-12 renewal date — 09-03-09 date — STATE OF CALIFORNIA

THE STATE OF CALIFORNIA OR ITS OFFICERS OR AGENTS SHALL NOT BE RESPONSIBLE FOR THE ACCURACY OR COMPLETENESS OF SCANNED COPIES OF THIS PLAN SHEET.

NOTE:

FOR ACCURATE RIGHT OF WAY AND ACCESS DATA, CONTACT RIGHT OF WAY ENGINEERING AT THE DISTRICT OFFICE.

LEGEND:

- EROSION CONTROL (TYPE 1) — COMPOST, INCORPORATE; EROSION CONTROL (HYDROSEED)
- EROSION CONTROL (TYPE 2) — EROSION CONTROL COMPOST BLANKET; ROLLED EROSION CONTROL PRODUCT (NETTING); EROSION CONTROL (HYDROSEED)
- EROSION CONTROL (TYPE 3) — EROSION CONTROL COMPOST BLANKET; EROSION CONTROL (HYDROSEED)
- FIBER ROLLS

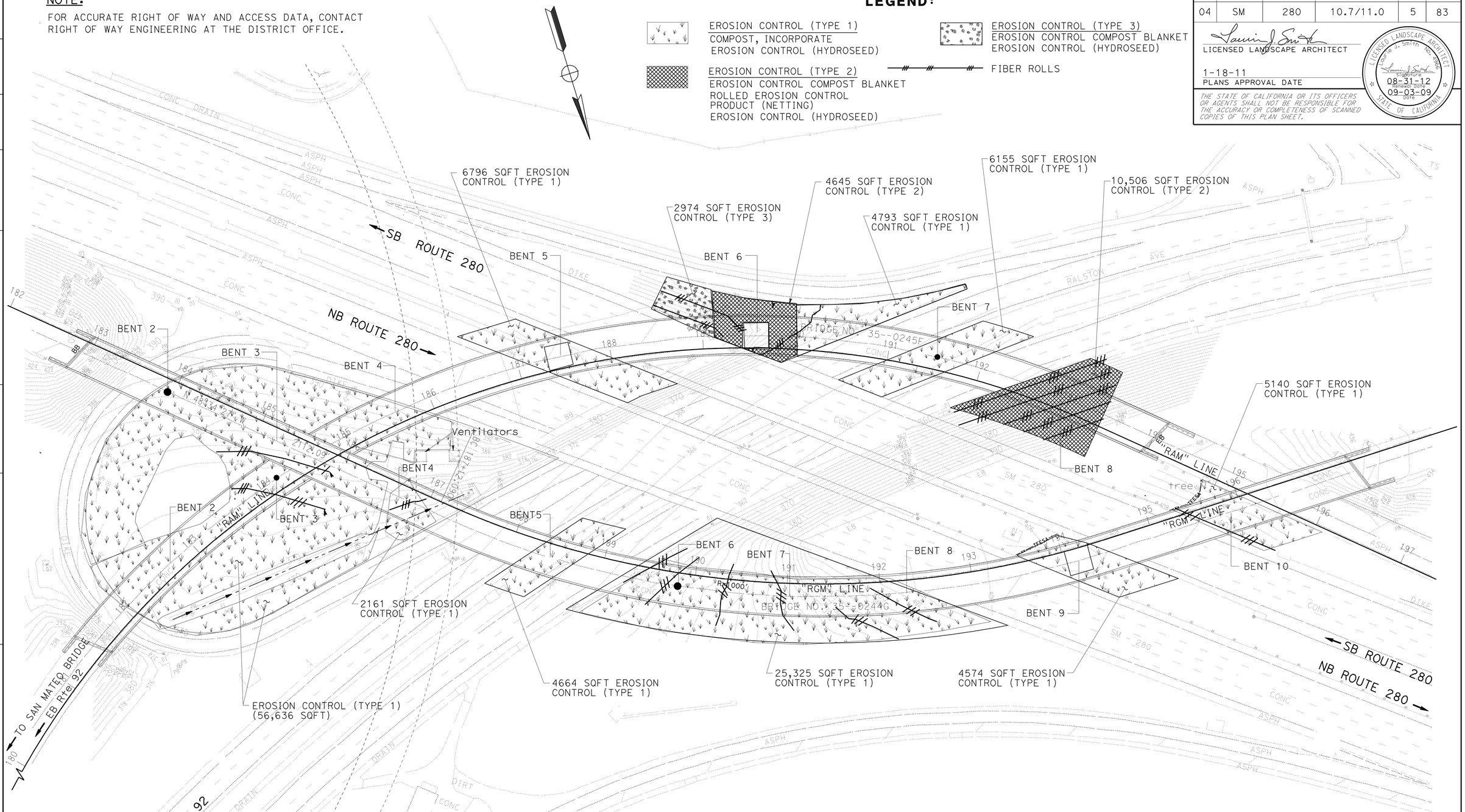

EROSION CONTROL PLAN

SCALE: 1" = 50'

EC-1

THIS PLAN ACCURATE FOR EROSION CONTROL WORK ONLY

STATE OF CALIFORNIA - DEPARTMENT OF TRANSPORTATION

Caltrans

WATER QUALITY

SENIOR LANDSCAPE ARCHITECT: DAVID W YAM

CALCULATED-DESIGNED BY: LAURIE J SMITH

CHECKED BY: ALEX MC DONALD

REVISED BY / DATE REVISED

LAST REVISION — DATE PLOTTED => 20-JAN-2011 — TIME PLOTTED => 11:42 — 12-17-10

Dist	COUNTY	ROUTE	POST MILES TOTAL PROJECT	SHEET No.	TOTAL SHEETS
04	SM	280	10.7/11.0	6	83

LICENSED LANDSCAPE ARCHITECT

1-18-11
PLANS APPROVAL DATE

LICENSED LANDSCAPE ARCHITECT
Laurie J. Smith No. 4586
Signature
08-31-12
Renewal Date
09-03-09
Date
STATE OF CALIFORNIA

THE STATE OF CALIFORNIA OR ITS OFFICERS OR AGENTS SHALL NOT BE RESPONSIBLE FOR THE ACCURACY OR COMPLETENESS OF SCANNED COPIES OF THIS PLAN SHEET.

EROSION CONTROL QUANTITIES

FIBER ROLL	EROSION CONTROL TYPE	EROSION CONTROL (HYDROSEED)	EROSION CONTROL (COMPOST BLANKET)	RECP (NETTING)	COMPOST, INCORPORATE
LF	(N)	SQFT	CY	SQFT	SQYD
1799	EROSION CONTROL (TYPE 1)	116204	-	-	12912
-	EROSION CONTROL (TYPE 2)	15151	47	15151	-
-	EROSION CONTROL (TYPE 3)	2974	9	-	-
1799	TOTAL	134329	56	15151	12912

(N) = NOT A SEPARATE PAY ITEM, FOR INFORMATION ONLY.

EROSION CONTROL QUANTITIES
ECQ-1

STATE OF CALIFORNIA - DEPARTMENT OF TRANSPORTATION
Caltrans
WATER QUALITY

SENIOR LANDSCAPE ARCHITECT: DAVID W YAM
CALCULATED-DESIGNED BY: LAURIE J SMITH
CHECKED BY: ALEX MC DONALD
REVISED BY
DATE REVISED

LAST REVISION 12-17-10
DATE PLOTTED => 20-JAN-2011
TIME PLOTTED => 11:42

Dist	COUNTY	ROUTE	POST MILES TOTAL PROJECT	SHEET No.	TOTAL SHEETS
04	SM	280	10.7/11.0	7	83

REGISTERED CIVIL ENGINEER 12/20/10 DATE

1-18-11
PLANS APPROVAL DATE

REGISTERED PROFESSIONAL ENGINEER Jerilyn L. Struven No. 49964 Exp. 12-31-10 CIVIL STATE OF CALIFORNIA

THE STATE OF CALIFORNIA OR ITS OFFICERS OR AGENTS SHALL NOT BE RESPONSIBLE FOR THE ACCURACY OR COMPLETENESS OF SCANNED COPIES OF THIS PLAN SHEET.

LEGEND:

- [No.] CONSTRUCTION AREA SIGN DESIGNATION
- → DIRECTION OF TRAFFIC
- X RAMP OR CONNECTOR TO BE CLOSED
- (No.) DETOUR SIGN DESIGNATION

NOTE:

EXACT LOCATION AND POSITION OF CONSTRUCTION AREA SIGNS TO BE DETERMINED BY THE ENGINEER.

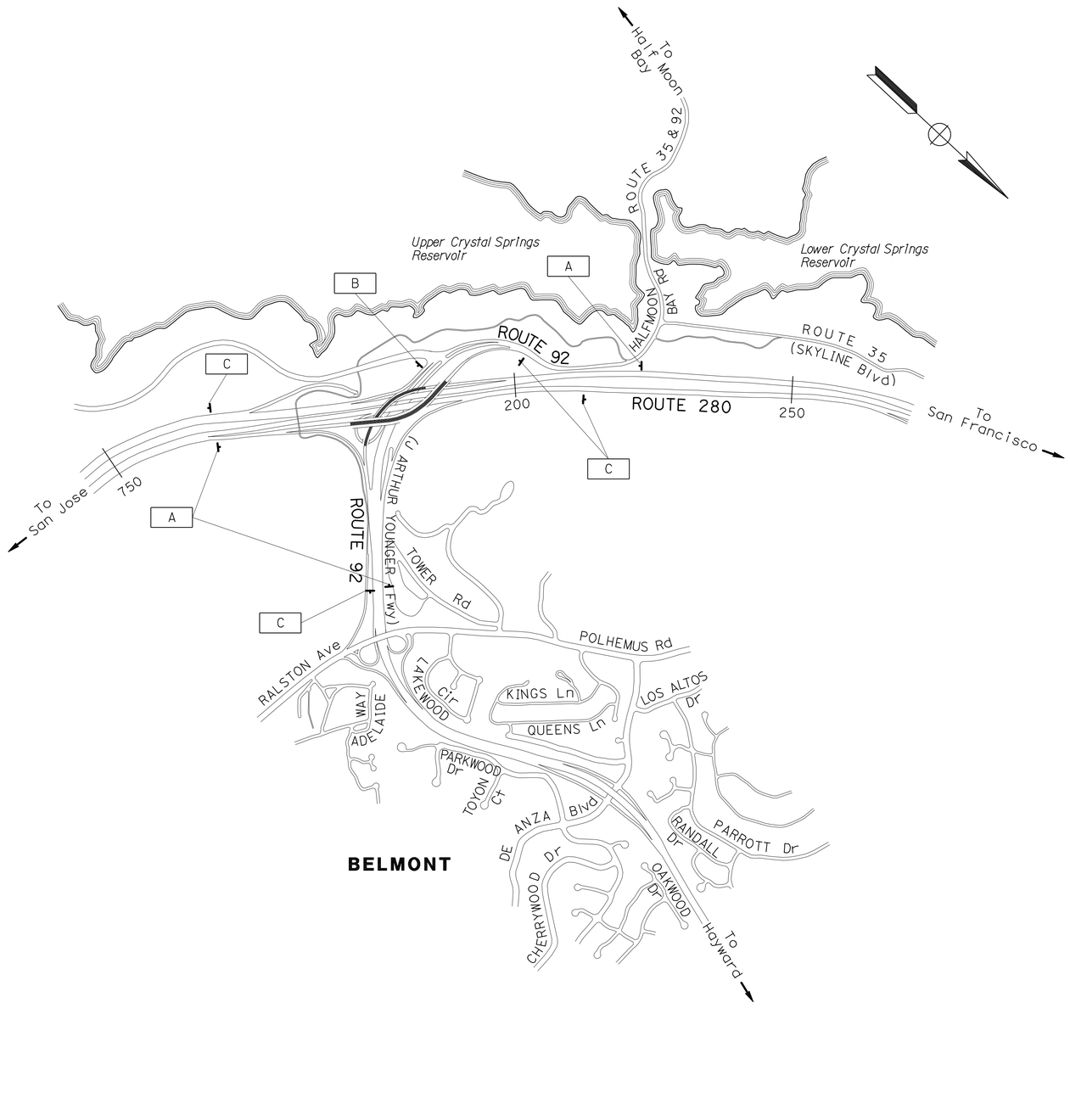

STATIONARY MOUNTED CONSTRUCTION AREA SIGNS

SIGN No.	SIGN CODE	PANEL SIZE	SIGN MESSAGE	NUMBER OF POSTS AND SIZE	No. OF SIGNS
A	W20-1	60" x 60"	ROAD WORK AHEAD	1 - 4" x 6"	3
B	W20-1	48" x 48"	ROAD WORK AHEAD	1 - 4" x 4"	1
C	G20-2	36" x 18"	END ROAD WORK	1 - 4" x 4"	4
1	M4-8	30" x 15"	DETOUR	1 - 4" x 6"	1
	G28-1 (92) (CA)	28" x 25"	ROUTE SHIELD		
	M3-4	30" x 15"	WEST		
	M6-2 (RIGHT)	21" x 15"	ARROW(↗)		
2	SC3-4 (CA)	48" x 18"	DETOUR(↗)	1 - 4" x 4"	11
3	M4-8a	24" x 18"	END DETOUR	1 - 4" x 4"	4
4	SC6-4 (CA)	48" x 60"	RAMP CLOSED	1 - 4" x 6"	4
5	M4-8	30" x 15"	DETOUR	1 - 4" x 6"	1
	G28-1 (92) (CA)	28" x 25"	ROUTE SHIELD		
	M3-2	30" x 15"	EAST		
	M6-3	21" x 15"	ARROW(↑)		
6	SC3 (CA)	48" x 18"	DETOUR(←)	1 - 4" x 4"	2
7	M4-8	30" x 15"	DETOUR	1 - 4" x 6"	1
	G28-1 (92) (CA)	28" x 25"	ROUTE SHIELD		
	M3-3	30" x 15"	SOUTH		
	M6-3	21" x 15"	ARROW(↑)		
8	M4-8	30" x 15"	DETOUR	1 - 4" x 6"	1
	G27-1 (280) (CA)	28" x 25"	ROUTE SHIELD		
	M3-3	30" x 15"	SOUTH		
	M6-3	21" x 15"	ARROW(↑)		
9	SC3 (CA)	48" x 18"	DETOUR(↖)	1 - 4" x 4"	1
			TOTAL		34

CONSTRUCTION AREA SIGNS

NO SCALE

THIS PLAN ACCURATE FOR CONSTRUCTION AREA SIGN WORK ONLY

CS-1

STATE OF CALIFORNIA - DEPARTMENT OF TRANSPORTATION
Caltrans®
DESIGN

FUNCTIONAL SUPERVISOR: ROLAND AU YEUNG
CALCULATED-DESIGNED BY: JERILYN STRUVEN
CHECKED BY: ROLAND AU YEUNG
REVISED BY
DATE REVISED

LAST REVISION 12-17-10
DATE PLOTTED => 20-JAN-2011
TIME PLOTTED => 11:42

Dist	COUNTY	ROUTE	POST MILES TOTAL PROJECT	SHEET No.	TOTAL SHEETS
04	SM	280	10.7/11.0	8	83

REGISTERED CIVIL ENGINEER DATE 12/20/10

1-18-11
PLANS APPROVAL DATE

REGISTERED PROFESSIONAL ENGINEER Jerilyn L. Struven No. 49964 Exp. 12-31-10 CIVIL STATE OF CALIFORNIA

THE STATE OF CALIFORNIA OR ITS OFFICERS OR AGENTS SHALL NOT BE RESPONSIBLE FOR THE ACCURACY OR COMPLETENESS OF SCANNED COPIES OF THIS PLAN SHEET.

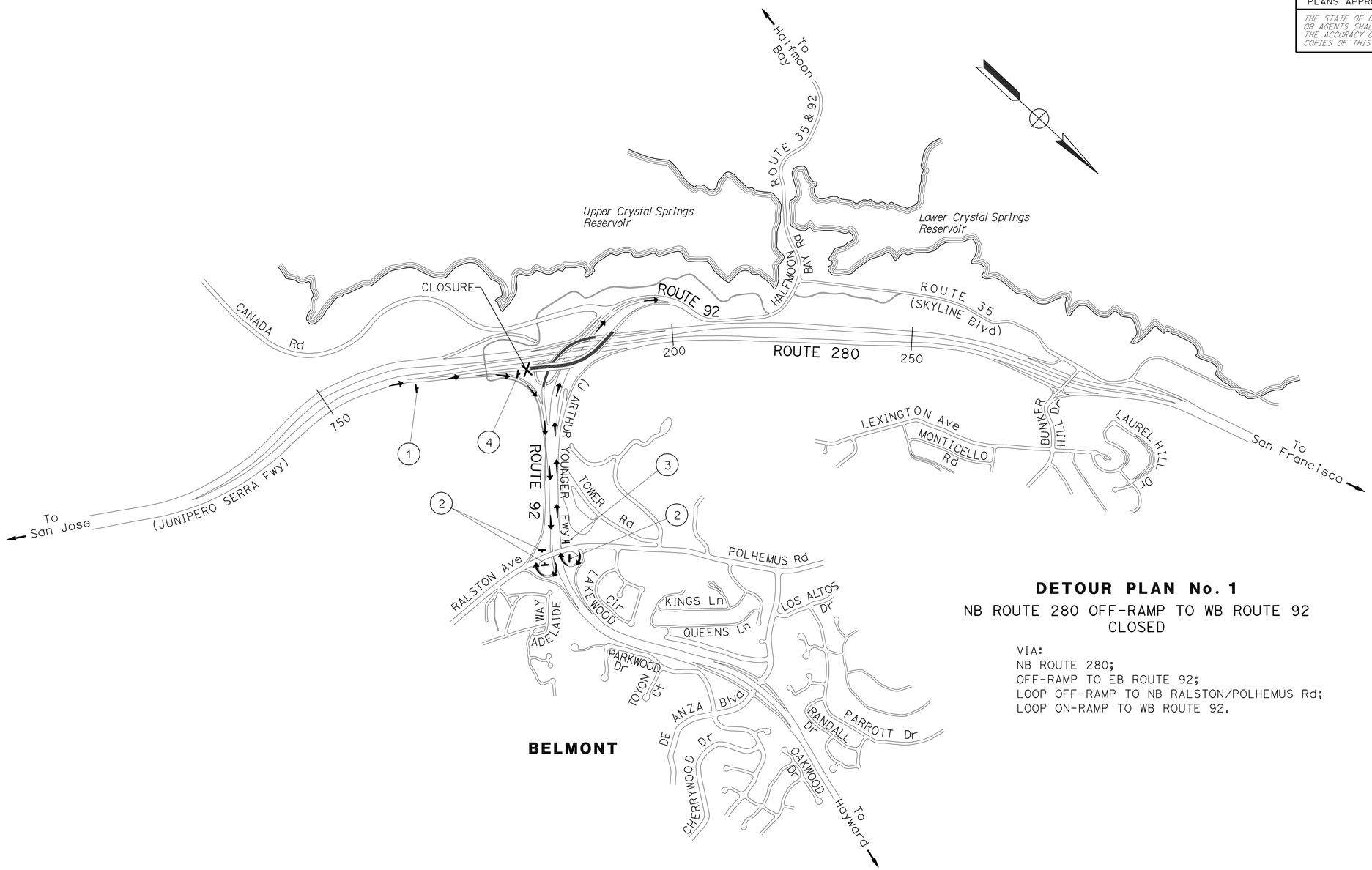

DETOUR PLAN No. 1

NB ROUTE 280 OFF-RAMP TO WB ROUTE 92
CLOSED

VIA:
NB ROUTE 280;
OFF-RAMP TO EB ROUTE 92;
LOOP OFF-RAMP TO NB RALSTON/POLHEMUS Rd;
LOOP ON-RAMP TO WB ROUTE 92.

CONSTRUCTION AREA SIGNS

NO SCALE

CS-2

FOR NOTES, ABBREVIATIONS AND LEGEND, SEE SHEET CS-1

THIS PLAN ACCURATE FOR CONSTRUCTION AREA SIGN WORK ONLY

STATE OF CALIFORNIA - DEPARTMENT OF TRANSPORTATION
Caltrans
DESIGN

FUNCTIONAL SUPERVISOR: ROLAND AU YEUNG
CALCULATED-DESIGNED BY: JERILYN STRUVEN
CHECKED BY: ROLAND AU YEUNG
REVISED BY
DATE REVISED

LAST REVISION 12-17-10
DATE PLOTTED => 20-JAN-2011
TIME PLOTTED => 11:42

Dist	COUNTY	ROUTE	POST MILES TOTAL PROJECT	SHEET No.	TOTAL SHEETS
04	SM	280	10.7/11.0	9	83

REGISTERED CIVIL ENGINEER 12/20/10 DATE

1-18-11
PLANS APPROVAL DATE

REGISTERED PROFESSIONAL ENGINEER Jerilyn L. Struven No. 49964 Exp. 12-31-10 CIVIL STATE OF CALIFORNIA

THE STATE OF CALIFORNIA OR ITS OFFICERS OR AGENTS SHALL NOT BE RESPONSIBLE FOR THE ACCURACY OR COMPLETENESS OF SCANNED COPIES OF THIS PLAN SHEET.

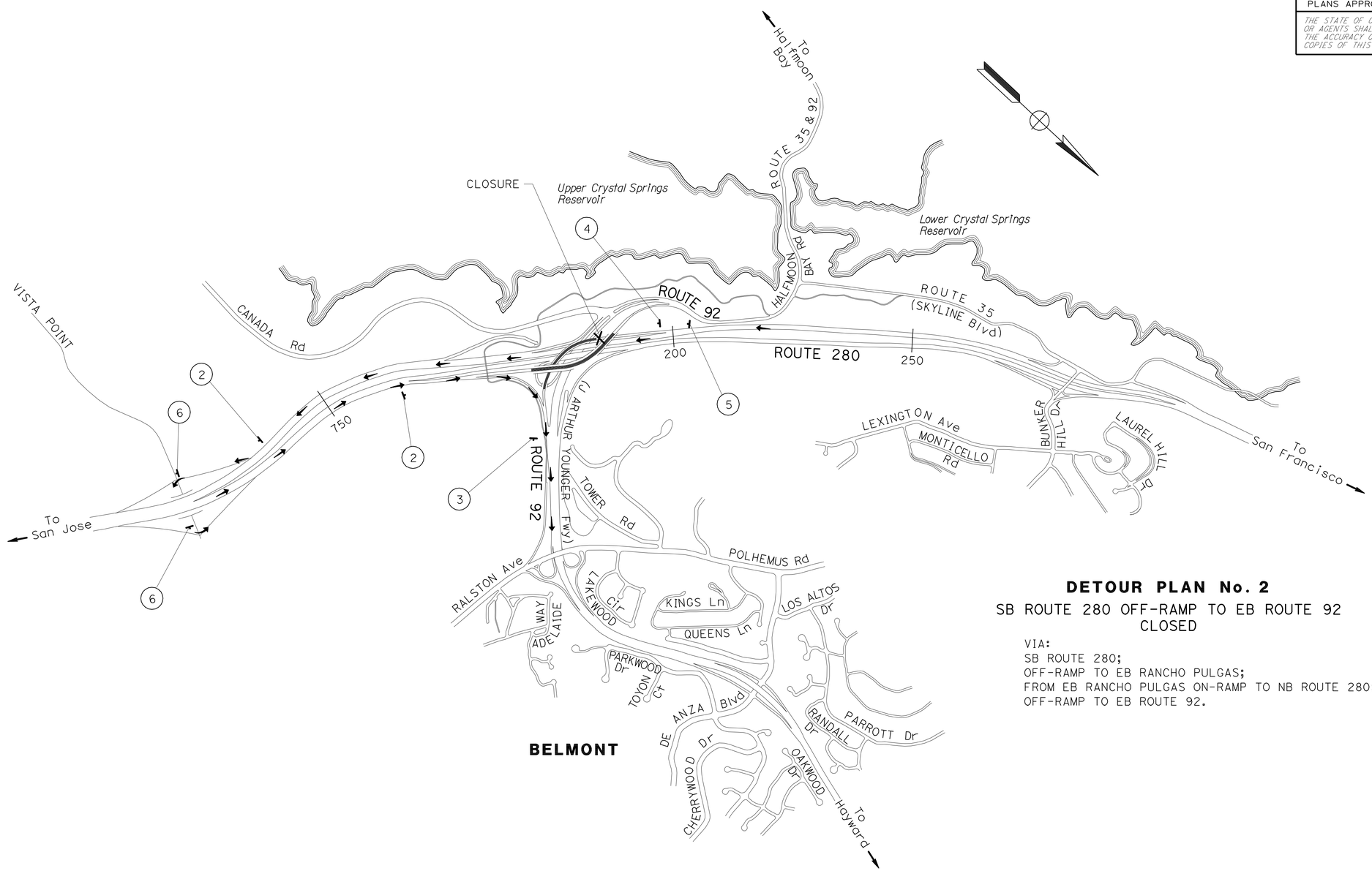

DETOUR PLAN No. 2

SB ROUTE 280 OFF-RAMP TO EB ROUTE 92
CLOSED

VIA:
SB ROUTE 280;
OFF-RAMP TO EB RANCHO PULGAS;
FROM EB RANCHO PULGAS ON-RAMP TO NB ROUTE 280;
OFF-RAMP TO EB ROUTE 92.

CONSTRUCTION AREA SIGNS

NO SCALE

FOR NOTES, ABBREVIATIONS AND LEGEND, SEE SHEET CS-1

THIS PLAN ACCURATE FOR CONSTRUCTION AREA SIGN WORK ONLY

CS-3

REVISED BY	DATE REVISED

CALCULATED-DESIGNED BY	CHECKED BY
JERILYN STRUVEN	ROLAND AU YEUNG

FUNCTIONAL SUPERVISOR: ROLAND AU YEUNG

STATE OF CALIFORNIA - DEPARTMENT OF TRANSPORTATION

Caltrans® DESIGN

LAST REVISION 12-17-10 | DATE PLOTTED => 20-JAN-2011 | TIME PLOTTED => 11:42

Dist	COUNTY	ROUTE	POST MILES TOTAL PROJECT	SHEET No.	TOTAL SHEETS
04	SM	280	10.7/11.0	10	83

REGISTERED CIVIL ENGINEER 12/20/10 DATE

1-18-11
PLANS APPROVAL DATE

REGISTERED PROFESSIONAL ENGINEER Jerilyn L. Struven No. 49964 Exp. 12-31-10 CIVIL STATE OF CALIFORNIA

THE STATE OF CALIFORNIA OR ITS OFFICERS OR AGENTS SHALL NOT BE RESPONSIBLE FOR THE ACCURACY OR COMPLETENESS OF SCANNED COPIES OF THIS PLAN SHEET.

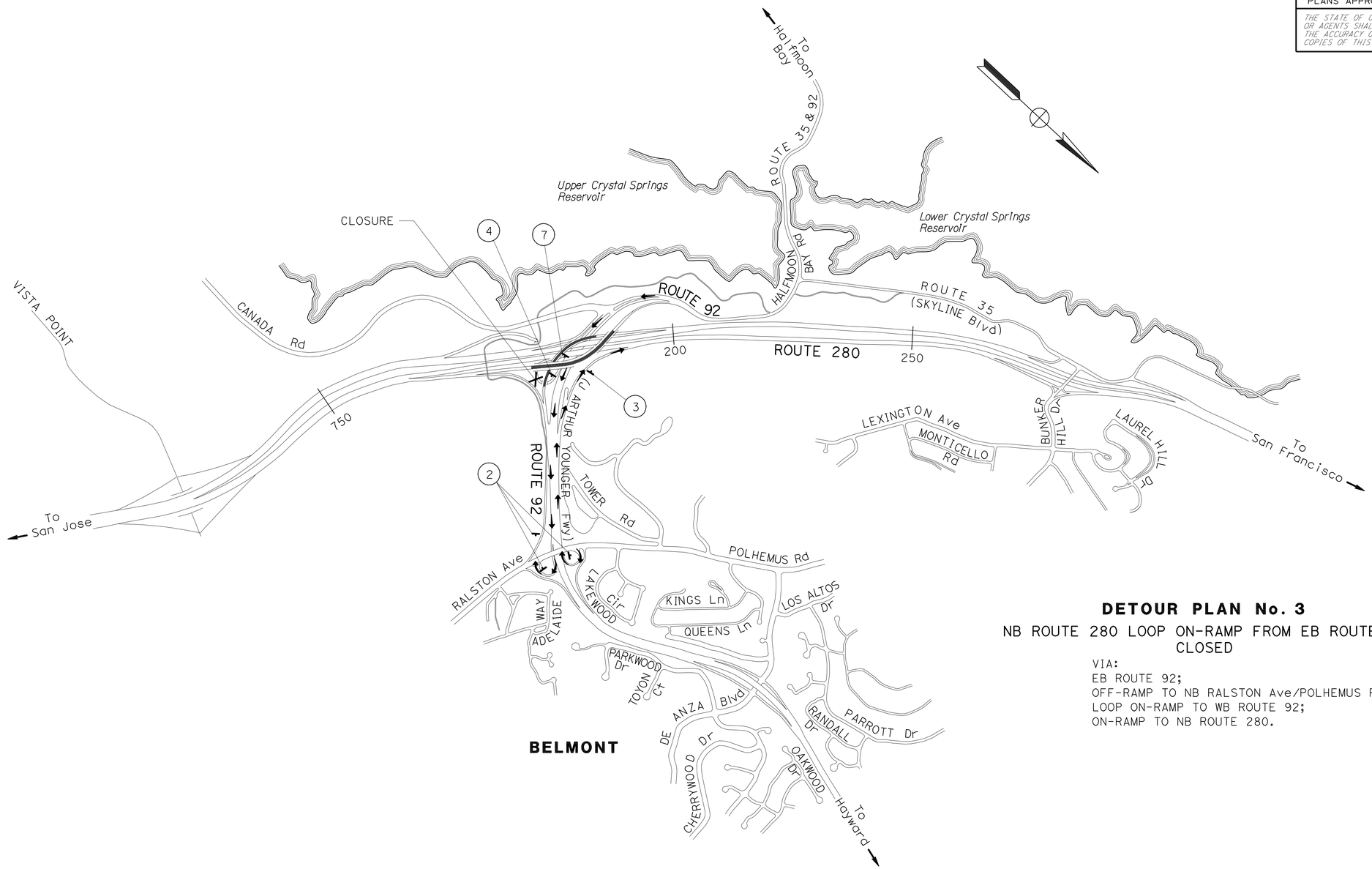

DETOUR PLAN No. 3

NB ROUTE 280 LOOP ON-RAMP FROM EB ROUTE 92 CLOSED

VIA:
EB ROUTE 92;
OFF-RAMP TO NB RALSTON Ave/POLHEMUS Rd;
LOOP ON-RAMP TO WB ROUTE 92;
ON-RAMP TO NB ROUTE 280.

CONSTRUCTION AREA SIGNS

NO SCALE

CS-4

FOR NOTES, ABBREVIATIONS AND LEGEND, SEE SHEET CS-1

THIS PLAN ACCURATE FOR CONSTRUCTION AREA SIGN WORK ONLY

STATE OF CALIFORNIA - DEPARTMENT OF TRANSPORTATION
Caltrans® DESIGN

FUNCTIONAL SUPERVISOR: ROLAND AU YEUNG
CALCULATED-DESIGNED BY: JERILYN STRUVEN
CHECKED BY: ROLAND AU YEUNG
REVISED BY
DATE REVISED

LAST REVISION 12-17-10 | DATE PLOTTED => 20-JAN-2011 | TIME PLOTTED => 11:42

Dist	COUNTY	ROUTE	POST MILES TOTAL PROJECT	SHEET No.	TOTAL SHEETS
04	SM	280	10.7/11.0	11	83

REGISTERED CIVIL ENGINEER 12/20/10 DATE

1-18-11
PLANS APPROVAL DATE

REGISTERED PROFESSIONAL ENGINEER Jerilyn L. Struven No. 49964 Exp. 12-31-10 CIVIL STATE OF CALIFORNIA

THE STATE OF CALIFORNIA OR ITS OFFICERS OR AGENTS SHALL NOT BE RESPONSIBLE FOR THE ACCURACY OR COMPLETENESS OF SCANNED COPIES OF THIS PLAN SHEET.

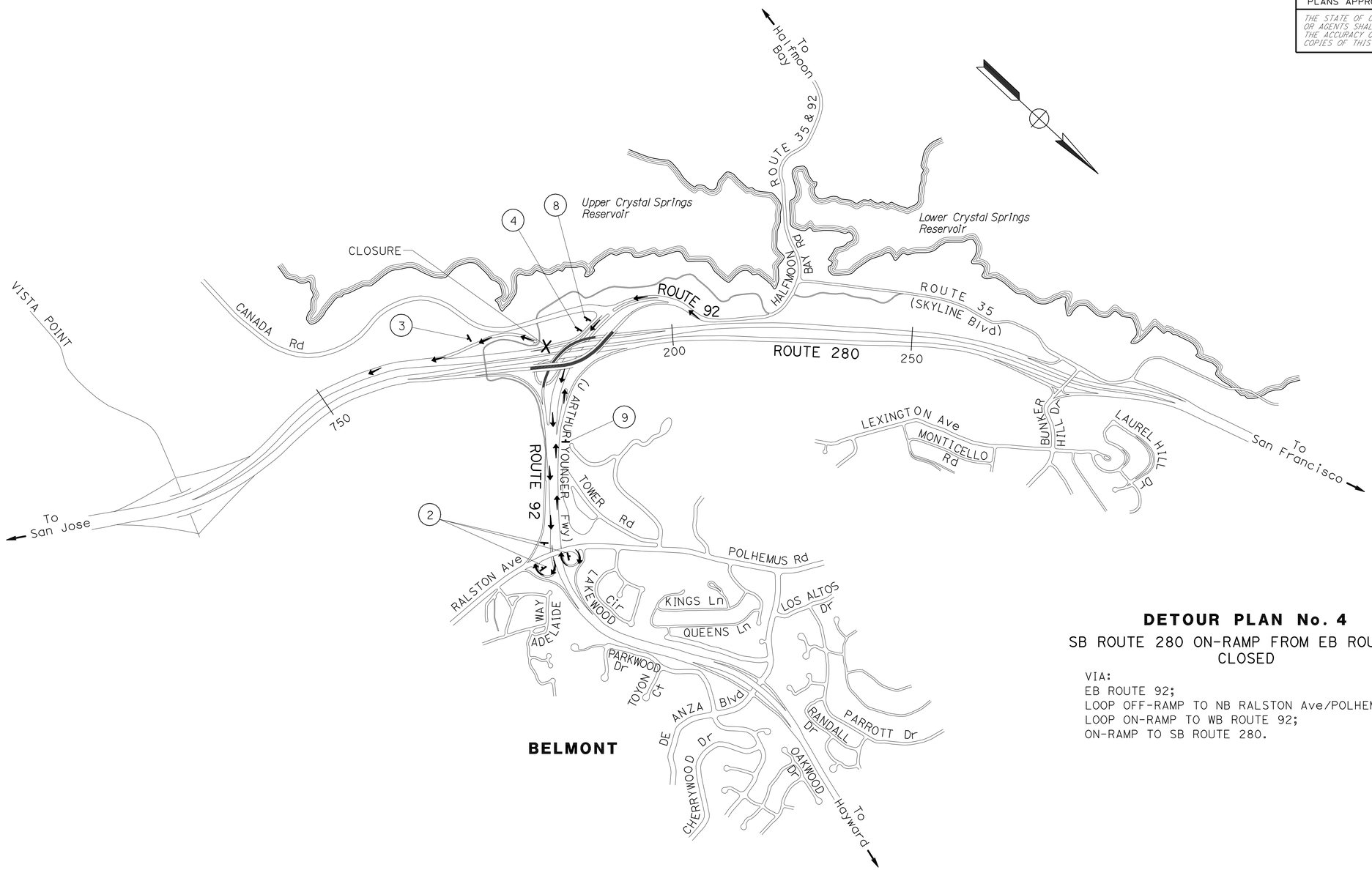

DETOUR PLAN No. 4

SB ROUTE 280 ON-RAMP FROM EB ROUTE 92 CLOSED

VIA:
EB ROUTE 92;
LOOP OFF-RAMP TO NB RALSTON Ave/POLHEMUS Rd;
LOOP ON-RAMP TO WB ROUTE 92;
ON-RAMP TO SB ROUTE 280.

CONSTRUCTION AREA SIGNS

NO SCALE

FOR NOTES, ABBREVIATIONS AND LEGEND, SEE SHEET CS-1

THIS PLAN ACCURATE FOR CONSTRUCTION AREA SIGN WORK ONLY

CS-5

REVISED BY	DATE REVISED

CALCULATED-DESIGNED BY	JERILYN STRUVEN
CHECKED BY	ROLAND AU YEUNG
FUNCTIONAL SUPERVISOR	ROLAND AU YEUNG

STATE OF CALIFORNIA - DEPARTMENT OF TRANSPORTATION

Caltrans

DESIGN

LAST REVISION 12-17-10 DATE PLOTTED => 20-JAN-2011 TIME PLOTTED => 11:42

Dist	COUNTY	ROUTE	POST MILES TOTAL PROJECT	SHEET No.	TOTAL SHEETS
04	SM	280	10.7/11.0	12	83

REGISTERED CIVIL ENGINEER DATE 12/20/10

1-18-11
PLANS APPROVAL DATE

REGISTERED PROFESSIONAL ENGINEER G.B. Modesto No. 50338 Exp. 6-30-11 CIVIL STATE OF CALIFORNIA

THE STATE OF CALIFORNIA OR ITS OFFICERS OR AGENTS SHALL NOT BE RESPONSIBLE FOR THE ACCURACY OR COMPLETENESS OF SCANNED COPIES OF THIS PLAN SHEET.

LEGEND:

- WORK AREA
- STEEL CASING ON COLUMN
- OVAL COLUMN SECTION ON MICROPILES AND 27' x 27' PILE CAP
- OVAL COLUMN SECTION ON MICROPILES AND 34' x 34' PILE CAP
- TEMPORARY CRASH CUSHION (ARRAY 'TS14')
- TEMPORARY RAILING (TYPE K)
- TEMPORARY FENCE (TYPE ESA)
- TEMPORARY FENCE (TYPE C1-6)
- X — PAVEMENT DELINEATION DETAIL NUMBER
- CHANGE OF PAVEMENT DELINEATION DETAILS

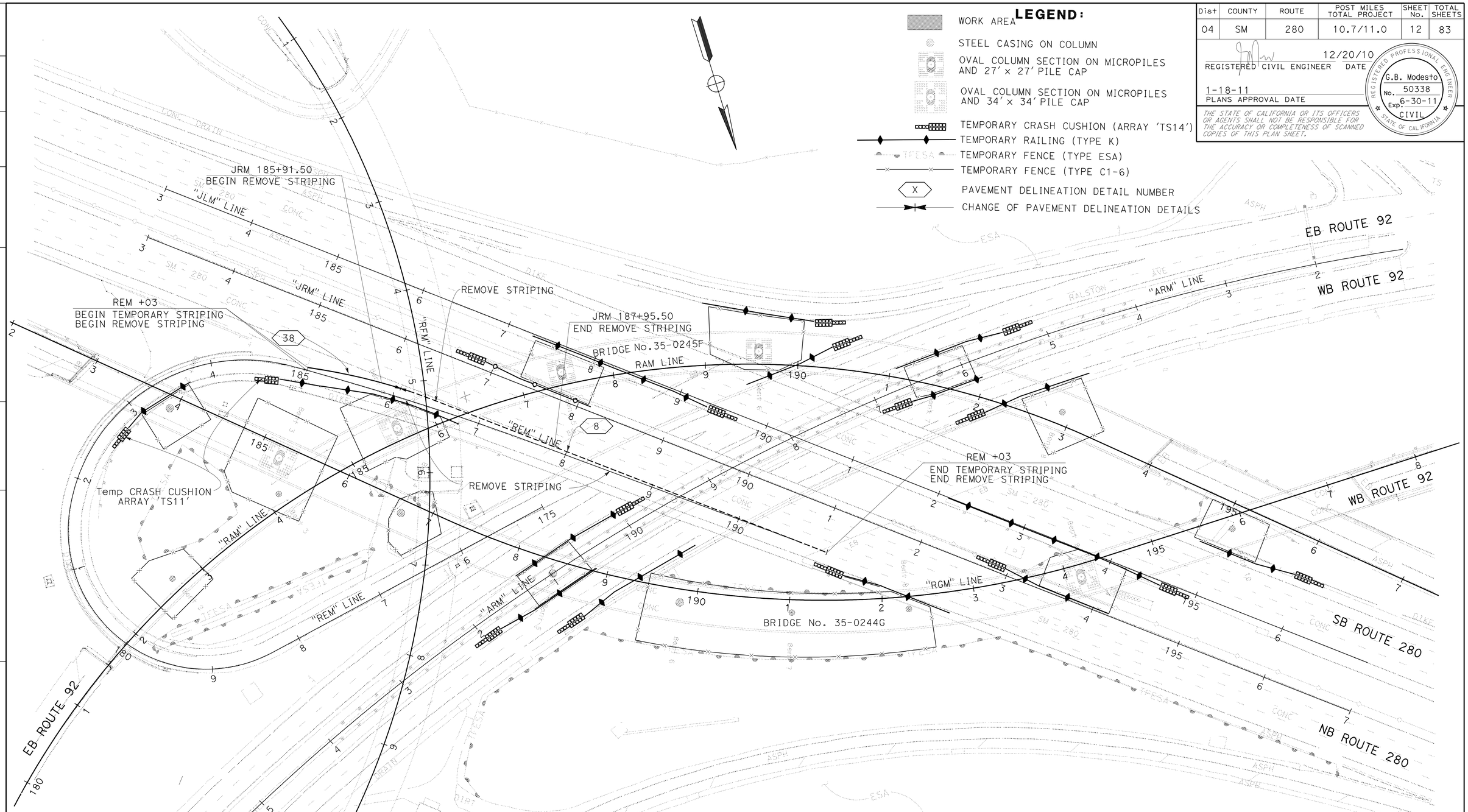

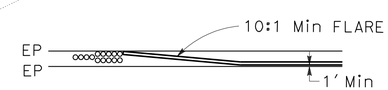

LAYOUT
TEMPORARY RAILING (TYPE K) TYPICAL
NO SCALE

THIS PLAN ACCURATE FOR TRAFFIC HANDLING WORK ONLY

TRAFFIC HANDLING PLAN

SCALE: 1" = 50'

TH-1

STATE OF CALIFORNIA - DEPARTMENT OF TRANSPORTATION
Caltrans
DESIGN

FUNCTIONAL SUPERVISOR: DUAT NGUYEN
CALCULATED-DESIGNED BY: STUART GOODSON
CHECKED BY: GERSY MODESTO
REVISED BY
DATE REVISED

LAST REVISION 12-17-10
DATE PLOTTED => 20-JAN-2011
TIME PLOTTED => 11:49

Dist	COUNTY	ROUTE	POST MILES TOTAL PROJECT	SHEET No.	TOTAL SHEETS
04	SM	280	10.7/11.0	13	83

REGISTERED CIVIL ENGINEER DATE 12/20/10

1-18-11
PLANS APPROVAL DATE

REGISTERED PROFESSIONAL ENGINEER G.B. Modesto No. 50338 Exp. 6-30-11 CIVIL STATE OF CALIFORNIA

THE STATE OF CALIFORNIA OR ITS OFFICERS OR AGENTS SHALL NOT BE RESPONSIBLE FOR THE ACCURACY OR COMPLETENESS OF SCANNED COPIES OF THIS PLAN SHEET.

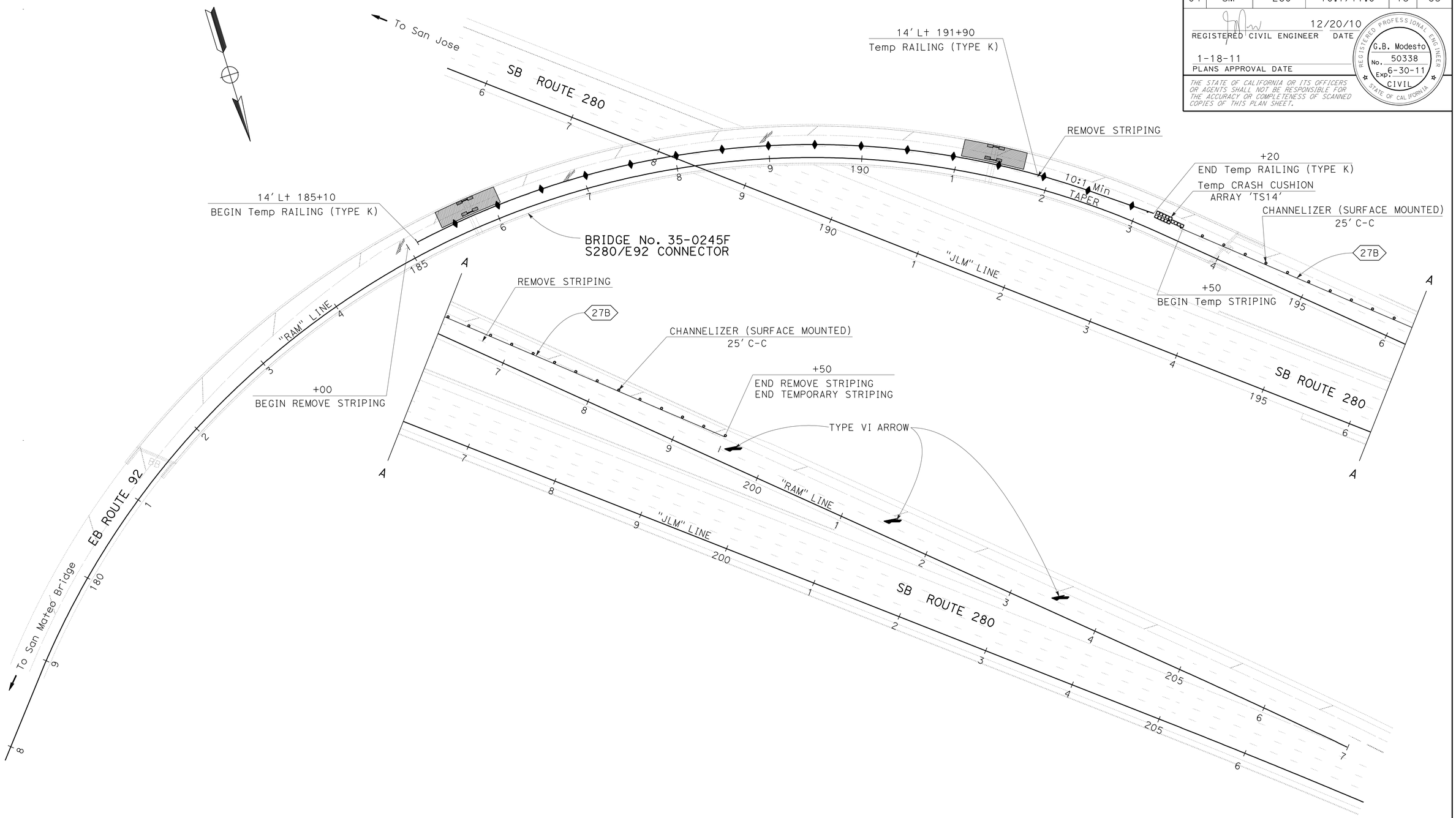

TRAFFIC HANDLING PLAN

STAGE 1 (SOUTHSIDE)

SCALE: 1" = 50'

FOR NOTES, ABBREVIATIONS AND LEGEND, SEE SHEET TH-1

THIS PLAN ACCURATE FOR TRAFFIC HANDLING WORK ONLY

TH-2

STATE OF CALIFORNIA - DEPARTMENT OF TRANSPORTATION
Caltrans
DESIGN

FUNCTIONAL SUPERVISOR: DUAT NGUYEN
CALCULATED-DESIGNED BY: STUART GOODSON
CHECKED BY: GERSY MODESTO
REVISED BY
DATE REVISED

LAST REVISION 12-17-10
DATE PLOTTED => 20-JAN-2011
TIME PLOTTED => 10:18

BORDER LAST REVISED 7/2/2010
USERNAME => trmnguye
DGN FILE => 0400000508md002.dgn
RELATIVE BORDER SCALE IS IN INCHES 0 1 2 3
UNIT 0792
PROJECT NUMBER & PHASE 04000005081

Dist	COUNTY	ROUTE	POST MILES TOTAL PROJECT	SHEET No.	TOTAL SHEETS
04	SM	280	10.7/11.0	14	83

REGISTERED CIVIL ENGINEER 12/20/10 DATE

1-18-11
PLANS APPROVAL DATE

REGISTERED PROFESSIONAL ENGINEER G.B. Modesto No. 50338 Exp. 6-30-11 CIVIL STATE OF CALIFORNIA

THE STATE OF CALIFORNIA OR ITS OFFICERS OR AGENTS SHALL NOT BE RESPONSIBLE FOR THE ACCURACY OR COMPLETENESS OF SCANNED COPIES OF THIS PLAN SHEET.

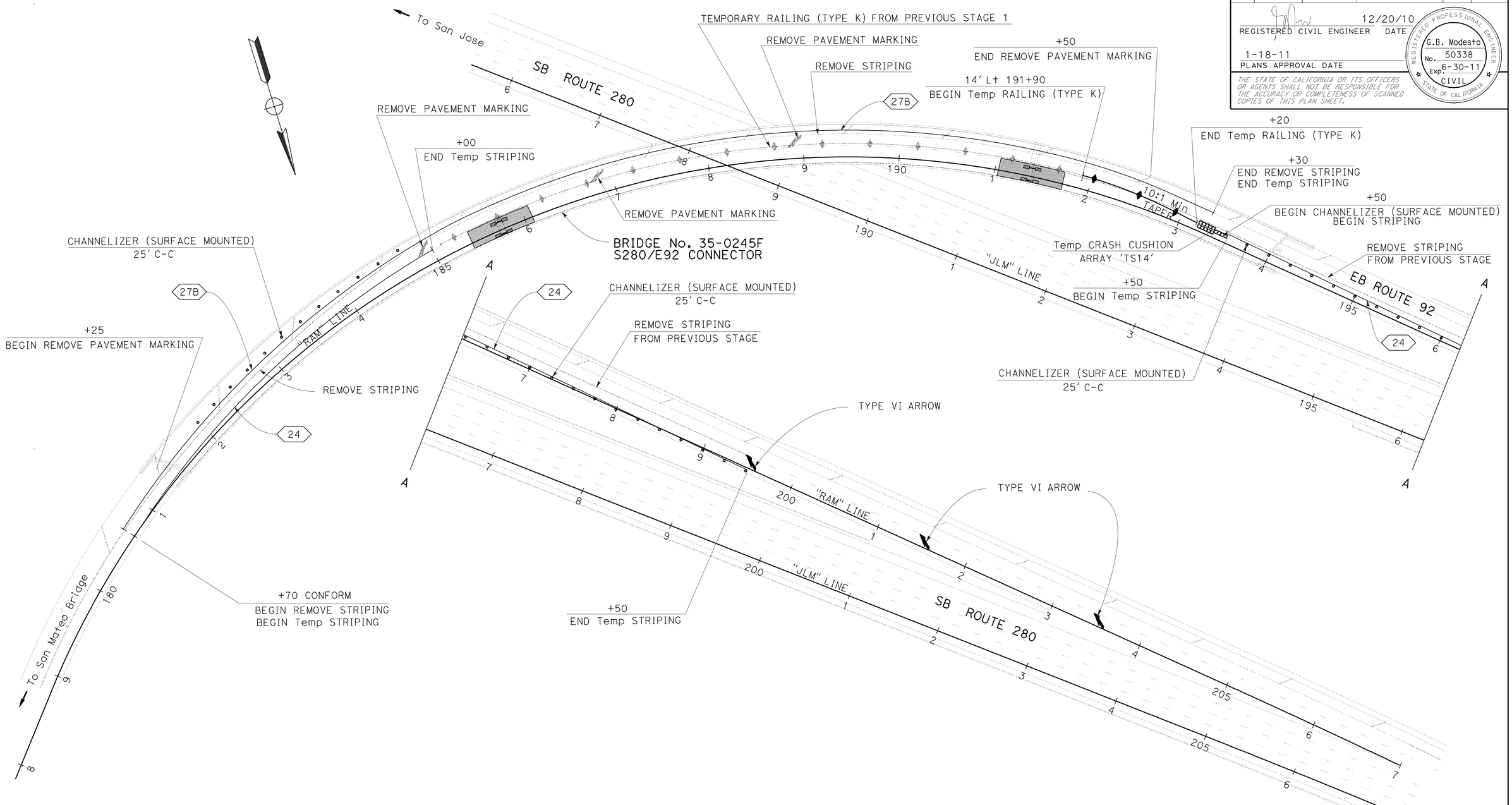

TRAFFIC HANDLING PLAN

STAGE 2 (NORTHSIDE)

SCALE: 1" = 50'

FOR NOTES, ABBREVIATIONS AND LEGEND, SEE SHEET TH-1

THIS PLAN ACCURATE FOR TRAFFIC HANDLING WORK ONLY

TH-3

STATE OF CALIFORNIA - DEPARTMENT OF TRANSPORTATION
Caltrans
DESIGN

FUNCTIONAL SUPERVISOR: DUAT NGUYEN
CALCULATED-DESIGNED BY: STUART GOODSON
CHECKED BY: GERSY MODESTO
REVISED BY
DATE REVISED

LAST REVISION 12-17-10
DATE PLOTTED => 20-JAN-2011
TIME PLOTTED => 10:18

Dist	COUNTY	ROUTE	POST MILES TOTAL PROJECT	SHEET No.	TOTAL SHEETS
04	SM	280	10.7/11.0	15	83

REGISTERED CIVIL ENGINEER 12/20/10 DATE

1-18-11
PLANS APPROVAL DATE

REGISTERED PROFESSIONAL ENGINEER G.B. Modesto No. 50338 Exp. 6-30-11 CIVIL STATE OF CALIFORNIA

THE STATE OF CALIFORNIA OR ITS OFFICERS OR AGENTS SHALL NOT BE RESPONSIBLE FOR THE ACCURACY OR COMPLETENESS OF SCANNED COPIES OF THIS PLAN SHEET.

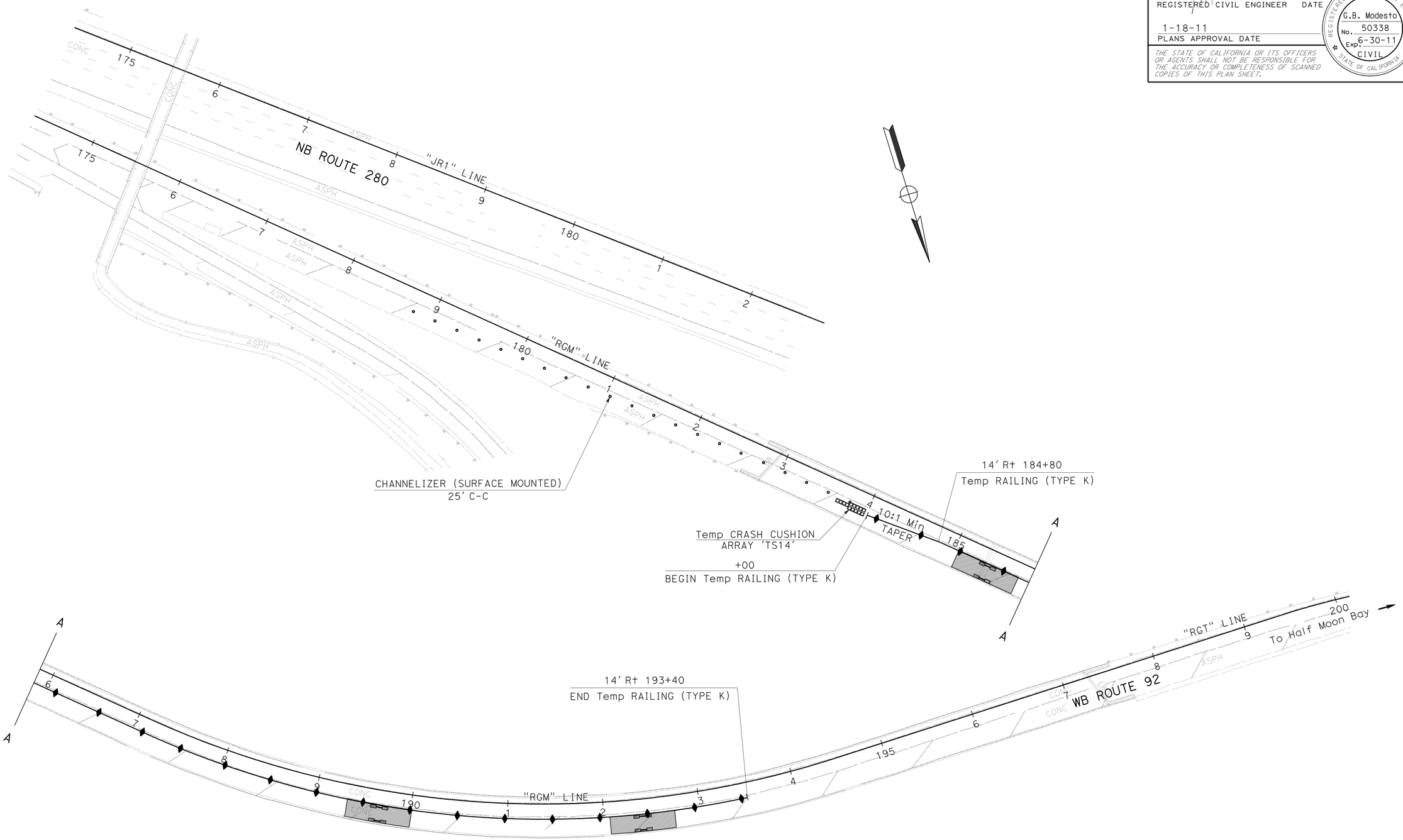

TRAFFIC HANDLING PLAN

STAGE 1 (NORTHSIDE)

SCALE: 1" = 50'

FOR NOTES, ABBREVIATIONS AND LEGEND, SEE SHEET TH-1

THIS PLAN ACCURATE FOR TRAFFIC HANDLING WORK ONLY

TH-4

STATE OF CALIFORNIA - DEPARTMENT OF TRANSPORTATION
Caltrans
DESIGN

FUNCTIONAL SUPERVISOR: DUAT NGUYEN
CALCULATED-DESIGNED BY: STUART GOODSON
CHECKED BY: GERSY MODESTO
REVISED BY
DATE REVISED

LAST REVISION 12-17-10
DATE PLOTTED => 20-JAN-2011
TIME PLOTTED => 10:18

Dist	COUNTY	ROUTE	POST MILES TOTAL PROJECT	SHEET No.	TOTAL SHEETS
04	SM	280	10.7/11.0	16	83

REGISTERED CIVIL ENGINEER DATE 12/20/10

1-18-11
PLANS APPROVAL DATE

REGISTERED PROFESSIONAL ENGINEER G.B. Modesto No. 50338 Exp. 6-30-11 CIVIL STATE OF CALIFORNIA

THE STATE OF CALIFORNIA OR ITS OFFICERS OR AGENTS SHALL NOT BE RESPONSIBLE FOR THE ACCURACY OR COMPLETENESS OF SCANNED COPIES OF THIS PLAN SHEET.

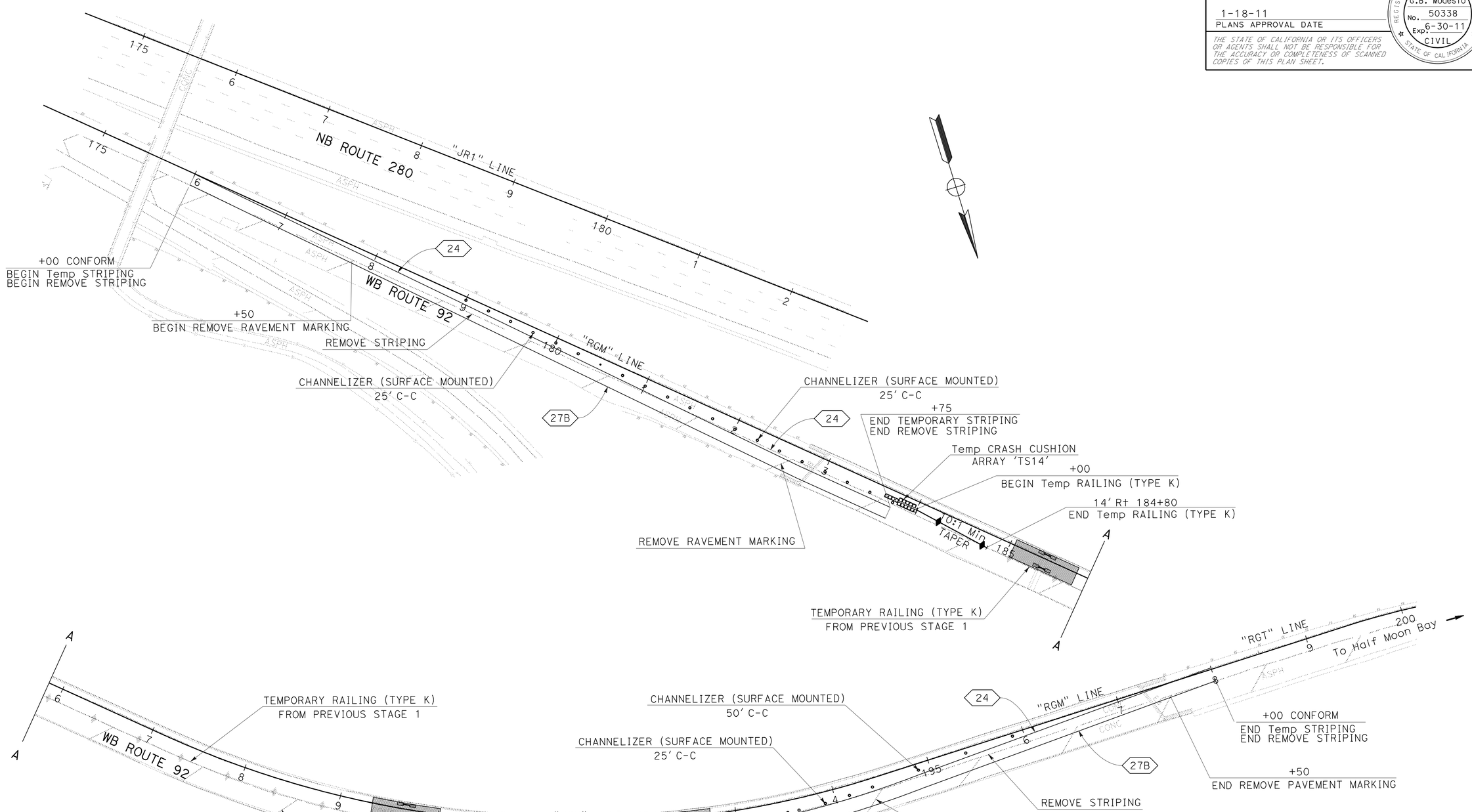

TRAFFIC HANDLING PLAN
STAGE 2 (SOUTHSIDE)
SCALE: 1" = 50'

FOR NOTES, ABBREVIATIONS AND LEGEND, SEE SHEET TH-1

THIS PLAN ACCURATE FOR TRAFFIC HANDLING WORK ONLY

TH-5

STATE OF CALIFORNIA - DEPARTMENT OF TRANSPORTATION
Caltrans® DESIGN

FUNCTIONAL SUPERVISOR: DUAT NGUYEN
CALCULATED-DESIGNED BY: STUART GOODSON
CHECKED BY: GERSY MODESTO
REVISED BY / DATE REVISED

LAST REVISION 12-17-10
DATE PLOTTED => 20-JAN-2011
TIME PLOTTED => 10:18

Dist	COUNTY	ROUTE	POST MILES TOTAL PROJECT	SHEET No.	TOTAL SHEETS
04	SM	280	10.7/11.0	17	83

REGISTERED CIVIL ENGINEER DATE 12/20/10

PLANS APPROVAL DATE 1-18-11

REGISTERED PROFESSIONAL ENGINEER G.B. Modesto No. 50338 Exp. 6-30-11 CIVIL STATE OF CALIFORNIA

THE STATE OF CALIFORNIA OR ITS OFFICERS OR AGENTS SHALL NOT BE RESPONSIBLE FOR THE ACCURACY OR COMPLETENESS OF SCANNED COPIES OF THIS PLAN SHEET.

LEGEND:

(X) PAVEMENT DELINEATION DETAIL NUMBER

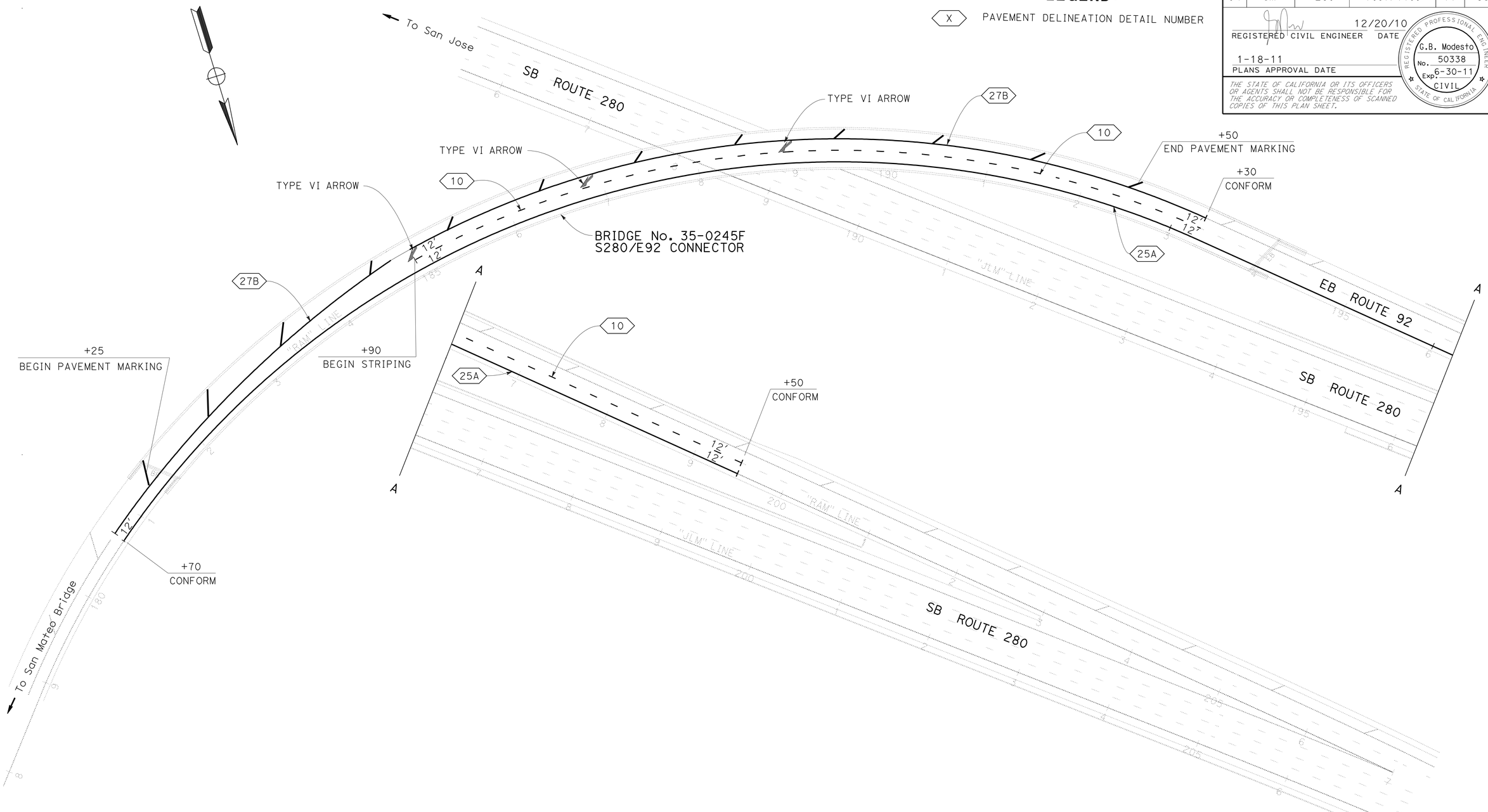

PAVEMENT DELINEATION PLAN

SCALE: 1" = 50'

PD-1

STATE OF CALIFORNIA - DEPARTMENT OF TRANSPORTATION

Caltrans

TRAFFIC

FUNCTIONAL SUPERVISOR: DUAT NGUYEN

CALCULATED-DESIGNED BY: STUART GOODSON

CHECKED BY: GERSY MODESTO

REVISED BY

DATE REVISED

LAST REVISION 12-17-10

DATE PLOTTED => 20-JAN-2011

TIME PLOTTED => 10:18

Dist	COUNTY	ROUTE	POST MILES TOTAL PROJECT	SHEET No.	TOTAL SHEETS
04	SM	280	10.7/11.0	18	83

REGISTERED CIVIL ENGINEER DATE 12/20/10

1-18-11
PLANS APPROVAL DATE

REGISTERED PROFESSIONAL ENGINEER G.B. Modesto No. 50338 Exp. 6-30-11 CIVIL STATE OF CALIFORNIA

THE STATE OF CALIFORNIA OR ITS OFFICERS OR AGENTS SHALL NOT BE RESPONSIBLE FOR THE ACCURACY OR COMPLETENESS OF SCANNED COPIES OF THIS PLAN SHEET.

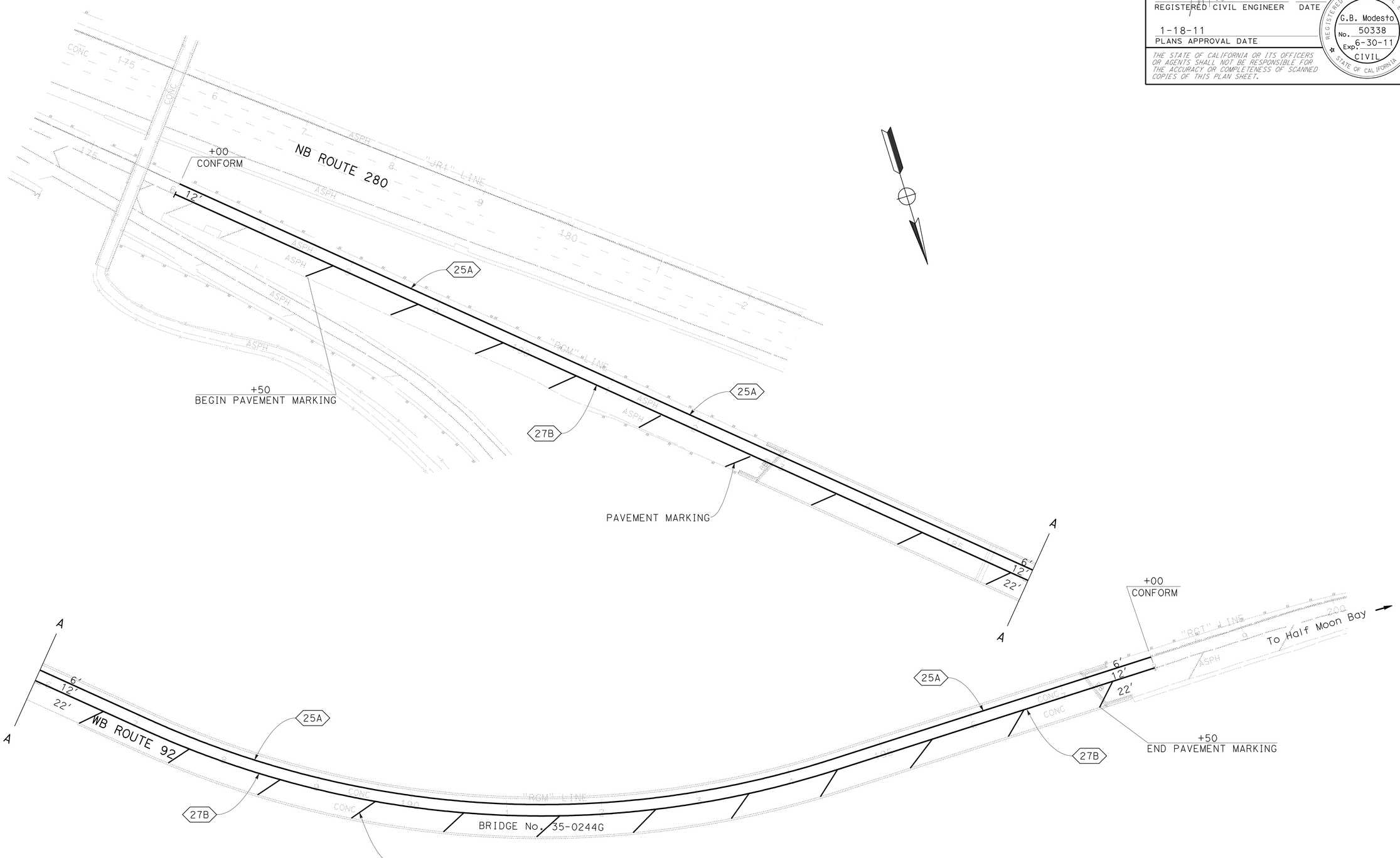

PAVEMENT DELINEATION PLAN

SCALE: 1" = 50'

FOR NOTES, ABBREVIATIONS AND LEGEND, SEE SHEET PD-1

THIS PLAN ACCURATE FOR PAVEMENT DELINEATION WORK ONLY

PD-2

STATE OF CALIFORNIA - DEPARTMENT OF TRANSPORTATION
Caltrans
TRAFFIC

FUNCTIONAL SUPERVISOR: DUAT NGUYEN
CALCULATED-DESIGNED BY: STUART GOODSON
CHECKED BY: GERSY MODESTO
REVISED BY
DATE REVISED

LAST REVISION 12-17-10
DATE PLOTTED => 20-JAN-2011
TIME PLOTTED => 10:19

Dist	COUNTY	ROUTE	POST MILES TOTAL PROJECT	SHEET No.	TOTAL SHEETS
04	SM	280	10.7/11.0	19	83

REGISTERED CIVIL ENGINEER DATE 12/20/10

1-18-11
PLANS APPROVAL DATE

REGISTERED PROFESSIONAL ENGINEER G.B. Modesto No. 50338 Exp. 6-30-11 CIVIL STATE OF CALIFORNIA

THE STATE OF CALIFORNIA OR ITS OFFICERS OR AGENTS SHALL NOT BE RESPONSIBLE FOR THE ACCURACY OR COMPLETENESS OF SCANNED COPIES OF THIS PLAN SHEET.

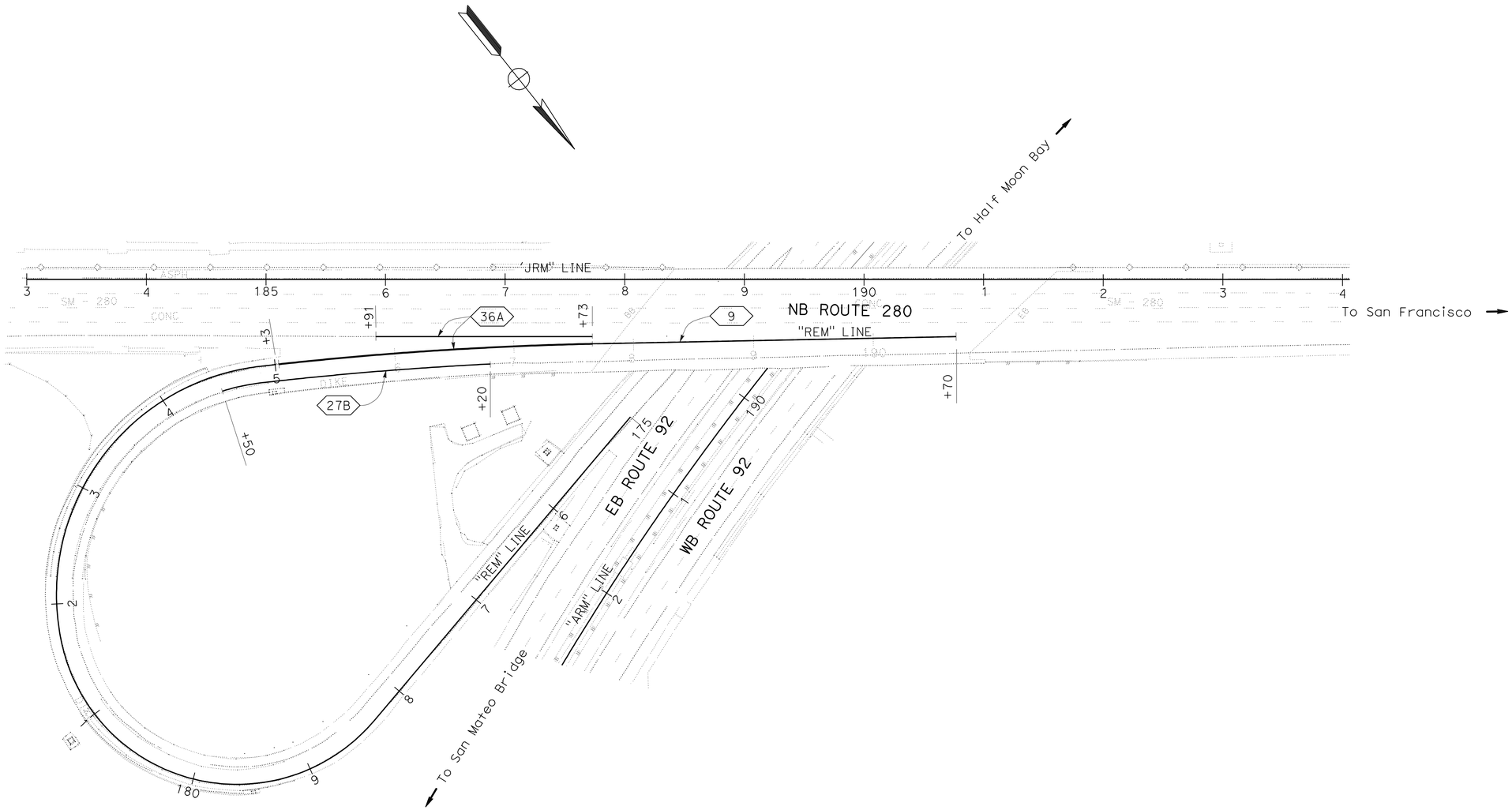

EB 92 TO NB 280 LOOP ON-RAMP

PAVEMENT DELINEATION PLAN

SCALE: 1" = 50'

PD-3

FOR NOTES, ABBREVIATIONS AND LEGEND, SEE SHEET PD-1

THIS PLAN ACCURATE FOR PAVEMENT DELINEATION WORK ONLY

STATE OF CALIFORNIA - DEPARTMENT OF TRANSPORTATION
Caltrans
TRAFFIC

FUNCTIONAL SUPERVISOR: DUAT NGUYEN
CALCULATED-DESIGNED BY: STUART GOODSON
CHECKED BY: GERSY MODESTO
REVISED BY
DATE REVISED

LAST REVISION | DATE PLOTTED => 20-JAN-2011
12-17-10 | TIME PLOTTED => 10:19

Dist	COUNTY	ROUTE	POST MILES TOTAL PROJECT	SHEET No.	TOTAL SHEETS
04	SM	280	10.7/11.0	20	83

REGISTERED CIVIL ENGINEER DATE 12/20/10

1-18-11
PLANS APPROVAL DATE

REGISTERED PROFESSIONAL ENGINEER G.B. Modesto No. 50338 Exp. 6-30-11 CIVIL STATE OF CALIFORNIA

THE STATE OF CALIFORNIA OR ITS OFFICERS OR AGENTS SHALL NOT BE RESPONSIBLE FOR THE ACCURACY OR COMPLETENESS OF SCANNED COPIES OF THIS PLAN SHEET.

REMOVE PAVEMENT DELINEATION

SHEET No.	STATION	REMOVE PAVEMENT MARKER	REMOVE THERMOPLASTIC TRAFFIC STRIPE	REMOVE THERMOPLASTIC PAVEMENT MARKING
			WHITE	
		EA	LF	SQFT
TH-1	REM 185+03 TO 191+03	25	600	
TH-1	JRM 185+92 TO 187+96		204	
TH-2	RAM 185+00 TO 199+50	241	1450	
TH-3	RAM 180+70 TO 193+30	211	1260	
TH-3	RAM 185+00 TO 189+00			126
TH-5	RGM 176+00 TO 183+75	129	775	
TH-5	RGM 193+50 TO 198+00	75	450	
TH-5	RGM 180+50 TO 197+50			610
TOTAL		681	4739	736

TRAFFIC STRIPE, PAVEMENT MARKINGS AND PAVEMENT MARKERS

SHEET No.	STATION	DETAIL No.	THERMOPLASTIC TRAFFIC STRIPE			THERMOPLASTIC PAVEMENT MARKING		PAVEMENT MARKER (NONREFLECTIVE)	PAVEMENT MARKER (RETROREFLECTIVE-SPECIAL)	
			4" YELLOW	4" WHITE	8" WHITE	12" WHITE	TYPE VI ARROW	TYPE A	TYPE G	TYPE H
			LF			SQFT		EA		
PD-1	RAM 180+70 TO 193+30	27B		1260						
PD-1	RAM 180+70 TO 199+50	25A	1880							82
PD-1	RAM 184+90 TO 199+50	10						186	32	
PD-1	RAM 184+90 TO 189+00						126			
PD-1	RAM 181+25 TO 192+50					214				
PD-2	RGM 177+50 TO 197+50					610				
PD-2	RGM 176+00 TO 198+00	25A	2200							99
PD-2	RGM 176+00 TO 198+00	27B		2200						
PD-3	REM 185+03 TO 187+66	36A			263				12	
PD-3	JRM 185+91 TO 187+73	36A		182						
PD-3	REM 187+66 TO 190+70	9		304					8	
SUBTOTAL			4080	3946	263	824	126	186	52	181
TOTAL			8026		263	950		186	52	181

PAVEMENT DELINEATION QUANTITIES

PDQ-1

REVISED BY | DATE REVISED
FITSUM WORREDE | GERSY MODESTO
CALCULATED-DESIGNED BY | CHECKED BY
FUNCTIONAL SUPERVISOR | DUAT NGUYEN

STATE OF CALIFORNIA - DEPARTMENT OF TRANSPORTATION
Caltrans
TRAFFIC

LAST REVISION 12-17-10 | DATE PLOTTED => 20-JAN-2011 | TIME PLOTTED => 10:56

Dist	COUNTY	ROUTE	POST MILES TOTAL PROJECT	SHEET No.	TOTAL SHEETS
04	SM	280	10.7/11.0	21	83

REGISTERED CIVIL ENGINEER DATE 12/20/10

1-18-11
PLANS APPROVAL DATE

REGISTERED PROFESSIONAL ENGINEER G.B. Modesto No. 50338 Exp. 6-30-11 CIVIL STATE OF CALIFORNIA

THE STATE OF CALIFORNIA OR ITS OFFICERS OR AGENTS SHALL NOT BE RESPONSIBLE FOR THE ACCURACY OR COMPLETENESS OF SCANNED COPIES OF THIS PLAN SHEET.

METAL BEAM GUARD RAILING

SHEET No.	STATION	LAYOUT TYPE	METAL BEAM GUARD RAILING	TRANSITION RAILING (TYPE WB)	ALTERNATIVE FLARED END SECTION	END ANCHOR ASSEMBLY (TYPE SFT)	END CAP (TYPE A)
			LF	EA			
L-1	REM 185+65			1			
L-1	JLM 188+55						1
L-1	JLM 192+25			1			
L-1	JLM 194+10				1		
L-1	JLM 187+45					1	
L-1	JLM 187+50 TO 188+55	12 DD	105				
L-1	JLM 192+60 TO 194+20	12 B	160				
TOTAL			265	2	1	1	1

CONCRETE BARRIER (TYPE 60)

SHEET No.	STATION	REMOVE TYPE 60	TYPE 60
		LF	
L-1	JRM 187+60 TO 187+90	30	30
L-1	JRM 193+60 TO 193+90	30	30
L-1	REM 185+80 TO 187+35		155
TOTAL		60	215

ROADWAY QUANTITES

SHEET No.	STATION	LOCATION	HOT MIX ASPHALT TYPE A
			TON
L-1	REM 186+20	BENT 4 RAM LINE	31
L-1	JRM 193+72	BENT 9 RGM LINE	8
L-1	JLM 193+80	BENT 9 RGM LINE	6
TOTAL			45

SALVAGE CRASH CUSHION

SHEET No.	STATION	ARRAY	EA
L-1	JLM 194+20	B14	1
TOTAL			1

CRASH CUSHION, SAND FILLED

SHEET No.	STATION	ARRAY	EA
L-1	JLM 194+50	B14	1
TOTAL			1

RECONSTRUCT THRIE BEAM BARRIER

SHEET No.	STATION	LF
L-1	ARM 190+80 TO 191+20	40
L-1	ARM 190+80 TO 191+20	40
L-1	ARM 186+00 TO 186+40	40
L-1	ARM 186+00 TO 186+40	40
TOTAL		160

REMOVE AC DIKE

SHEET No.	STATION	LF
L-1	REM 185+80 TO 185+97	17
L-1	REM 186+40 TO 187+33	93
TOTAL		110

PORTABLE CHANGEABLE MESSAGE SIGN

SHEET No.	LOCATION	EA
CS-2	ROUTE 280 NB	1
CS-3	ROUTE 280 SB	1
CS-4	ROUTE 92 EB	1
CS-5	ROUTE 92 EB	1
TOTAL		4

MINOR CONCRETE (MINOR STRUCTURE)

SHEET No.	STATION	THRIE BEAM BARRIER CONNECTION
		CY
L-1	JLM 188+80	1.0
L-1	JLM 192+10	1.0
TOTAL		2.0

MINOR CONCRETE (MISCELLANEOUS CONSTRUCTION)

SHEET No.	STATION	SPLASH PAD
		CY
L-1	ARM 191+00	1.0
TOTAL		1.0

REMOVE METAL BEAM GUARD RAILING

SHEET No.	STATION	LF
L-1	REM 185+30 TO 187+10	180
L-1	JLM 187+45 TO 188+80	140
L-1	JLM 192+10 TO 194+20	210
TOTAL		530

SUMMARY OF QUANTITIES

Q-1

STATE OF CALIFORNIA - DEPARTMENT OF TRANSPORTATION
Caltrans®
DESIGN

FUNCTIONAL SUPERVISOR: DUAT NGUYEN
CALCULATED-DESIGNED BY: FITSUM WORREDE
CHECKED BY: GERSY MODESTO
REVISED BY
DATE REVISED

LAST REVISION 12-17-10
DATE PLOTTED => 20-JAN-2011
TIME PLOTTED => 10:56

Dist	COUNTY	ROUTE	POST MILES TOTAL PROJECT	SHEET No.	TOTAL SHEETS
04	SM	280	10.7/11.0	22	83

REGISTERED CIVIL ENGINEER DATE 12/20/10

1-18-11
PLANS APPROVAL DATE

REGISTERED PROFESSIONAL ENGINEER G.B. Modesto No. 50338 Exp. 6-30-11 CIVIL STATE OF CALIFORNIA

THE STATE OF CALIFORNIA OR ITS OFFICERS OR AGENTS SHALL NOT BE RESPONSIBLE FOR THE ACCURACY OR COMPLETENESS OF SCANNED COPIES OF THIS PLAN SHEET.

TEMPORARY FENCE (TYPE CL-6)

SHEET No.	STATION	BENT No.	LF
TH-1	EB 92	2	237
TH-1	WB 92	3	388
TH-1	NB 280	4	311
TH-1	NB 280	5	245
TH-1	EB 92	6	304
TH-1	BETWEEN EB & WB 92	7	210
TH-1	WB 92	8	264
TH-1	EB 92 TO NB 280	2	210
TH-1	EB 92 TO NB 280	4	203
TH-1	WB&EB 92	5	216
TH-1	WB 92	6,7,8	754
TH-1	NB 280	2	254
TH-1	SB 280	2	228
TOTAL			3824

TEMPORARY PAVEMENT DELINEATION

SHEET No.	STATION	DETAIL No.	TEMPORARY TRAFFIC STRIPE (PAINT)			TEMPORARY PAVEMENT MARKER	TEMPORARY PAVEMENT MARKING (PAINT)
			4" YELLOW	4" WHITE	8" WHITE		TYPE VI ARROW
			LF			EA	SQFT
TH-1	REM 185+03 TO 186+10	38			107	6	
TH-1	REM 186+10 TO 191+03	8		493			
TH-2	RAM 199+50 TO 203+50						126
TH-2	RAM 193+50 TO 199+50	27B		600			
TH-3	RAM 199+50 TO 203+50						126
TH-3	RAM 180+70 TO 193+30	27B		1260			
TH-3	RAM 180+70 TO 185+00	24	430				
TH-3	RAM 193+50 TO 199+50	24		600			
TH-5	RGM 176+00 TO 183+75	27B		775			
TH-5	RGM 176+00 TO 183+75	24	775				
TH-5	RGM 191+86 TO 198+00	27B		614			
TH-5	RGM 193+50 TO 198+00	24	450				
SUBTOTAL			1655	4342	107	6	252
TOTAL				6110		6	252

TEMPORARY RAILING (TYPE K)

SHEET No.	STATION	LF
TH-1	REM 182+82 TO 183+62	80
TH-1	REM 184+76 TO 186+76	200
TH-1	ARM 184+70 TO 185+90	120
TH-1	ARM 185+44 TO 186+64	120
TH-1	ARM 185+83 TO 186+63	80
TH-1	ARM 189+51 TO 190+91	140
TH-1	ARM 190+04 TO 191+44	140
TH-1	ARM 190+55 TO 191+75	120
TH-1	ARM 187+15 TO 187+95	80
TH-1	ARM 187+25 TO 188+45	120
TH-1	JLM 187+28 TO 189+28	200
TH-1	JLM 192+12 TO 194+72	260
TH-1	JLM 194+82 TO 196+02	120
TH-1	JRM 191+33 TO 192+53	120
TH-1	JRM 186+89 TO 188+09	120
TH-1	JRM 192+95 TO 194+15	120
TH-2	RAM 185+10 TO 193+20 STAGE 1	820
TH-3	RAM 191+90 TO 193+20 STAGE 2	140
TH-4	RGM 184+00 TO 193+40 STAGE 1	940
TH-5	RGM 184+00 TO 184+80 STAGE 2	80
TOTAL		4120

TEMPORARY CRASH CUSHION MODULE

SHEET No.	STATION	ARRAY	EA
TH-1	REM 182+64	TS11	11
TH-1	REM 184+60	TS11	11
TH-1	JLM 186+70	TS14	14
TH-1	ARM 191+97	TS14	14
TH-1	ARM 191+05	TS14	14
TH-1	ARM 189+95	TS14	14
TH-1	ARM 187+10 EB 92 TO SB 280	TS14	14
TH-1	ARM 187+05	TS14	14
TH-1	ARM 185+27	TS14	14
TH-1	ARM 186+85	TS14	14
TH-1	ARM 186+17	TS14	14
TH-1	JLM 189+95	TS14	14
TH-1	JLM 191+20	TS14	14
TH-1	JLM 192+80	TS14	14
TH-1	JLM 194+80	TS14	14
TH-1	JLM 196+00	TS14	14
TH-2	RAM 193+20 STAGE 1	TS14	14
TH-3	RAM 193+40 STAGE 2	TS14	14
TH-4	RGM 183+90 STAGE 1	TS14	14
TH-5	RGM 183+90 STAGE 2	TS14	14
TOTAL			274

CHANNELIZER (SURFACE MOUNTED)

SHEET No.	STATION	EA
TH-2	RAM 193+50 TO 199+50	24
TH-3	RAM 182+00 TO 185+00	12
TH-3	RAM 193+50 TO 199+50	24
TH-4	RGM 178+50 TO 183+50	20
TH-5	RGT 179+00 TO 183+75	19
TH-5	RGT 193+50 TO 196+00	10
TOTAL		109

SUMMARY OF QUANTITIES

Q-2

REVISED BY | DATE REVISED
FITSUM WORREDE | GERSY MODESTO
CALCULATED-DESIGNED BY | CHECKED BY
FUNCTIONAL SUPERVISOR | DUAT NGUYEN
STATE OF CALIFORNIA - DEPARTMENT OF TRANSPORTATION
Caltrans® DESIGN

LAST REVISION 12-17-10 | DATE PLOTTED => 20-JAN-2011 TIME PLOTTED => 10:57

Dist	COUNTY	ROUTE	POST MILES TOTAL PROJECT	SHEET No.	TOTAL SHEETS
04	SM	280	10.7/11.0	23	83

REGISTERED ELECT ENGINEER 12/21/10 DATE

1-18-11
PLANS APPROVAL DATE

REGISTERED PROFESSIONAL ENGINEER Lindy F. Cabugao No. 17232 Exp. 6-30-12 ELECT STATE OF CALIFORNIA

THE STATE OF CALIFORNIA OR ITS OFFICERS OR AGENTS SHALL NOT BE RESPONSIBLE FOR THE ACCURACY OR COMPLETENESS OF SCANNED COPIES OF THIS PLAN SHEET.

ABBREVIATIONS:

(E) EXISTING
CTID CALTRANS IDENTIFICATION

PROJECT NOTES:

1 RL EXISTING LED EMS PANEL ON NEW WOOD POSTS.

RC OLD WOOD POSTS ALIGN NEW EMS TO EXISTING EMS LOCATED ON THE NORTH SIDE.

GENERAL NOTES:

1. ALL EXISTING EQUIPMENT SHALL REMAIN IN PLACE UNLESS OTHERWISE NOTED.
2. UNLESS SHOWN OTHERWISE, LOCATIONS OF CABINETS, STANDARDS, FOUNDATIONS, LIGHTING FIXTURES, CONDUITS, PULL BOXES, APPURTENANCES AND OTHER SIMILAR ELECTRICAL EQUIPMENT ARE APPROXIMATE AND MAY BE CHANGED TO SUIT FIELD CONDITIONS OR AS DIRECTED BY THE ENGINEER.

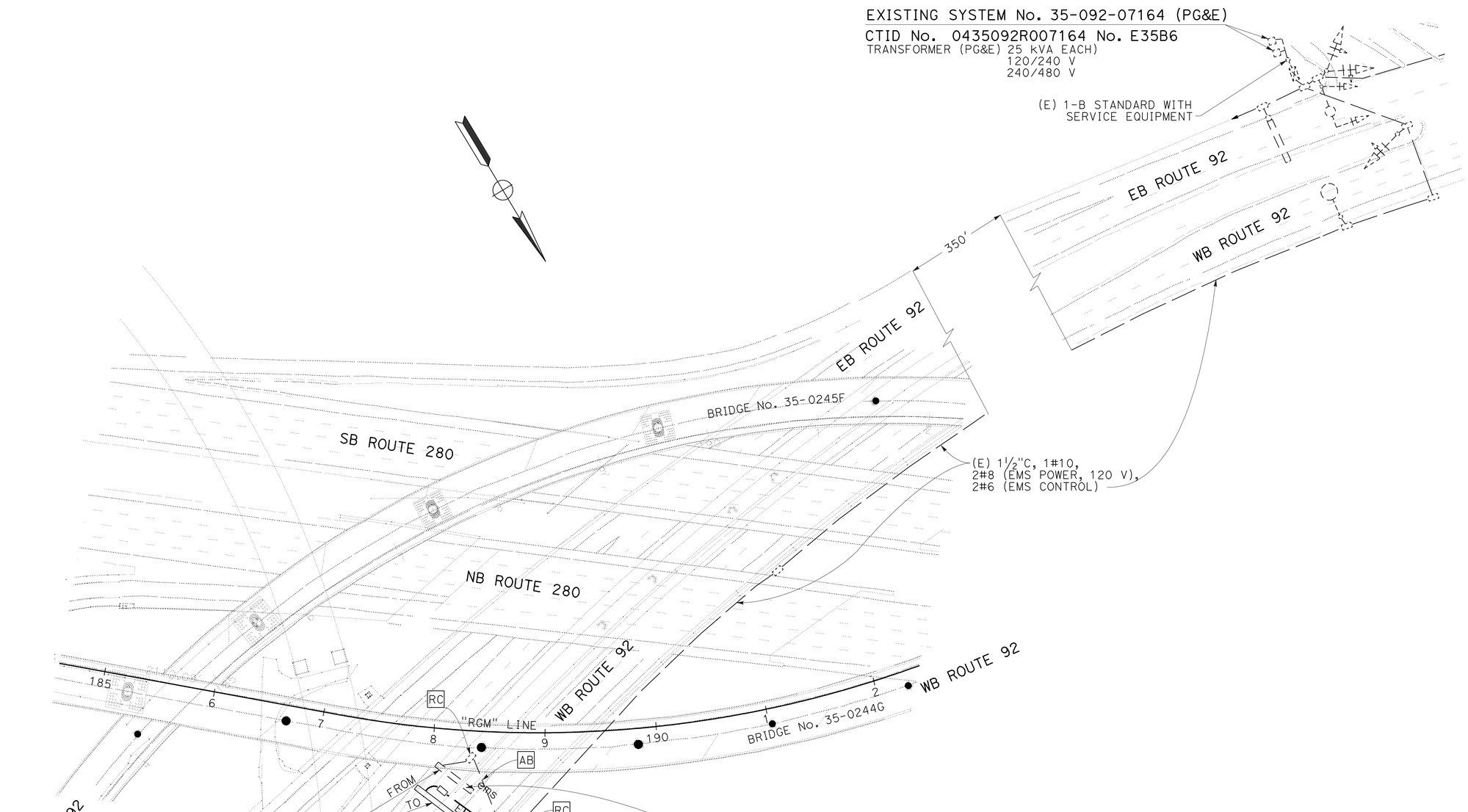

RELOCATE EXTINGUISHABLE MESSAGE SIGN

SCALE: 1" = 50'

THIS PLAN IS ACCURATE FOR ELECTRICAL WORK ONLY.

E-1

STATE OF CALIFORNIA - DEPARTMENT OF TRANSPORTATION
Caltrans
ELECTRICAL

FUNCTIONAL SUPERVISOR: KENNETH XU
CALCULATED-DESIGNED BY: LINDY CABUGAO
CHECKED BY: KENNETH XU
REVISED BY
DATE REVISED

LAST REVISION 12-17-10 | DATE PLOTTED => 20-JAN-2011 | TIME PLOTTED => 10:57

Dist	COUNTY	ROUTE	POST MILES TOTAL PROJECT	SHEET No.	TOTAL SHEETS
04	SM	280	10.7/11.0	24	83

REGISTERED ELECT ENGINEER 01/19/11 DATE

1-18-11
PLANS APPROVAL DATE

REGISTERED PROFESSIONAL ENGINEER Lindy F. Cabugao No. E17232 Exp. 6-30-12 ELECT STATE OF CALIFORNIA

THE STATE OF CALIFORNIA OR ITS OFFICERS OR AGENTS SHALL NOT BE RESPONSIBLE FOR THE ACCURACY OR COMPLETENESS OF SCANNED COPIES OF THIS PLAN SHEET.

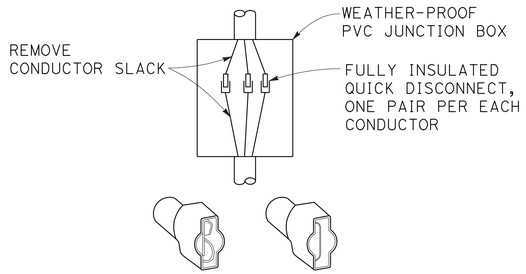

FULLY INSULATED QUICK DISCONNECTS

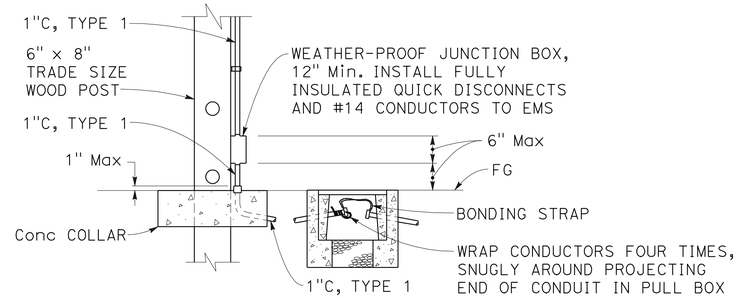

DETAIL A
CONDUIT BREAKAWAY

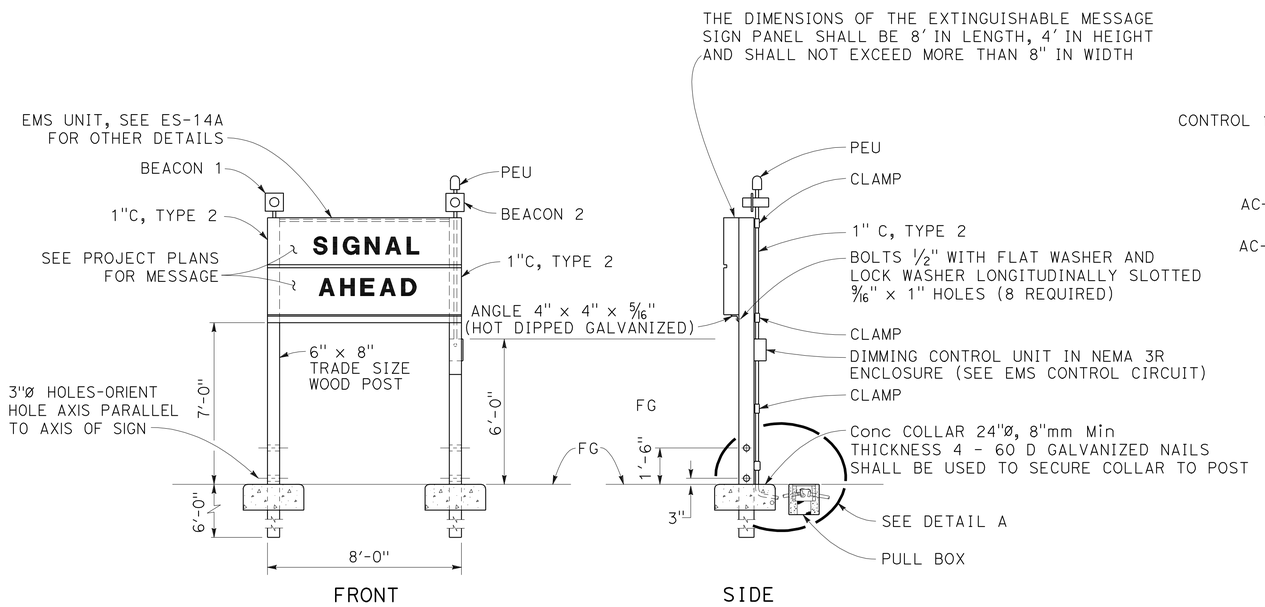

DETAIL EMS
EXTINGUISHABLE MESSAGE SIGN

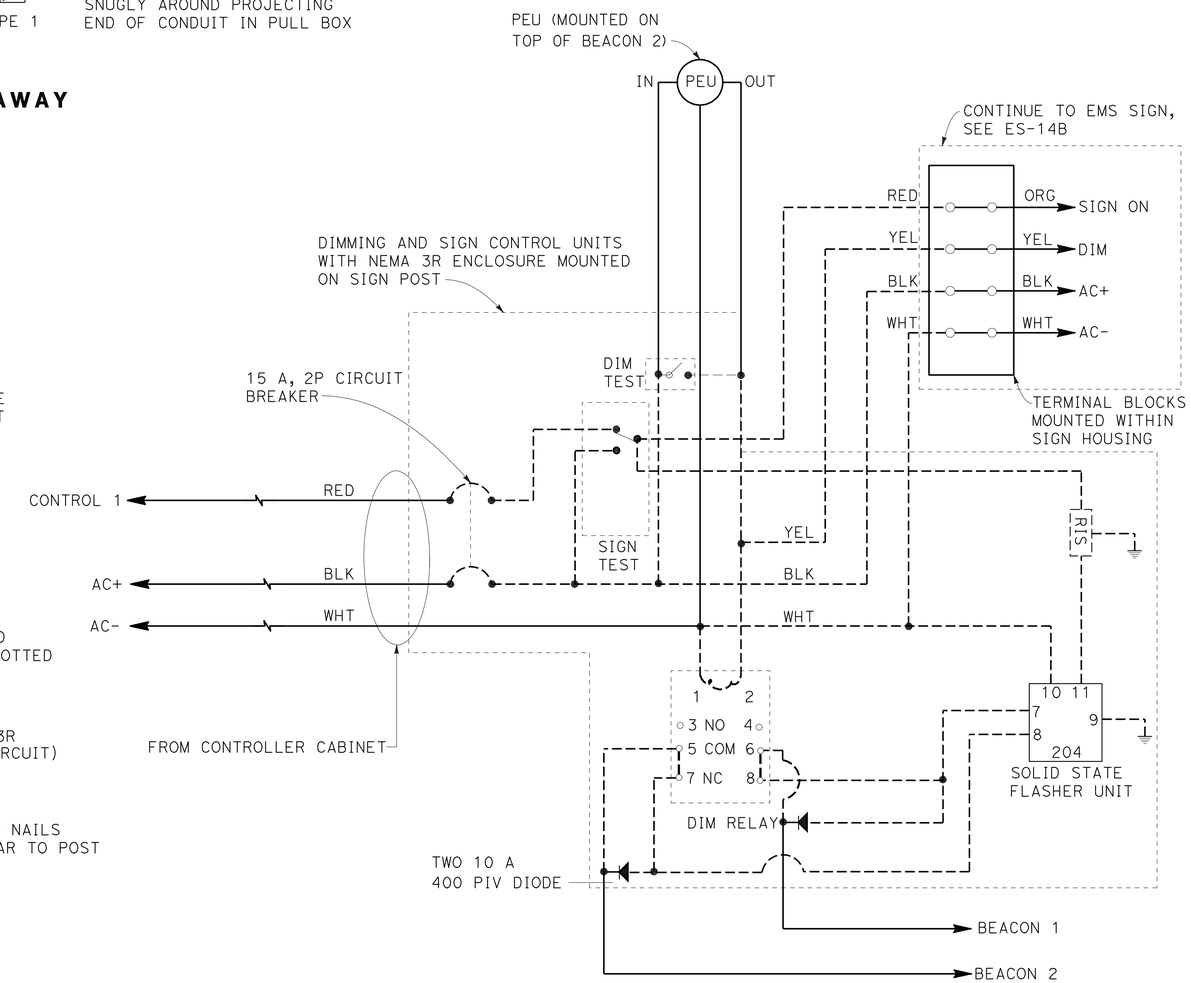

EXISTING EMS CONTROL CIRCUIT

ELECTRICAL DETAILS
(EMS WITH CONTROL CIRCUIT)

NO SCALE

FOR NOTES, ABBREVIATIONS AND LEGEND, SEE SHEET E-1

THIS PLAN IS ACCURATE FOR ELECTRICAL WORK ONLY

E-2

REVISED BY	DATE REVISED
LC	1/19/11

CALCULATED-DESIGNED BY: LINDY CABUGAO
CHECKED BY: KENNETH XU
FUNCTIONAL SUPERVISOR: KENNETH XU

STATE OF CALIFORNIA - DEPARTMENT OF TRANSPORTATION
Caltrans
ELECTRICAL

LAST REVISION 01-19-11 | DATE PLOTTED => 20-JAN-2011 | TIME PLOTTED => 10:57

DIST	COUNTY	ROUTE	POST MILES TOTAL PROJECT	SHEET NO.	TOTAL SHEETS
04	SM	280	10.7/11.0	25	83

Randell D. Hiatt
REGISTERED CIVIL ENGINEER

June 6, 2008
PLANS APPROVAL DATE

REGISTERED PROFESSIONAL ENGINEER
Randell D. Hiatt
No. C50200
Exp. 6-30-09
CIVIL
STATE OF CALIFORNIA

The State of California or its officers or agents shall not be responsible for the accuracy or completeness of electronic copies of this plan sheet.

To accompany plans dated 1-18-11

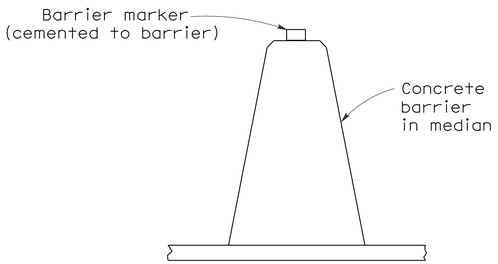

CONCRETE BARRIER TYPE 60 DELINEATION

See Notes 7 and 8

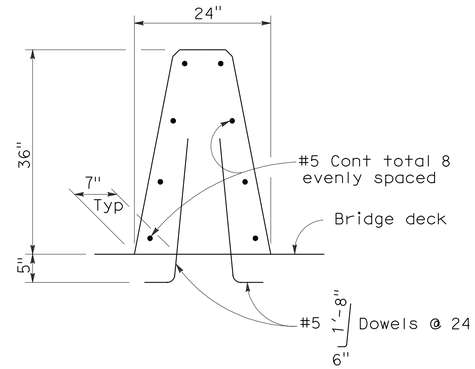

CONCRETE BARRIER TYPE 60A

Details similar to Type 60 except as noted.

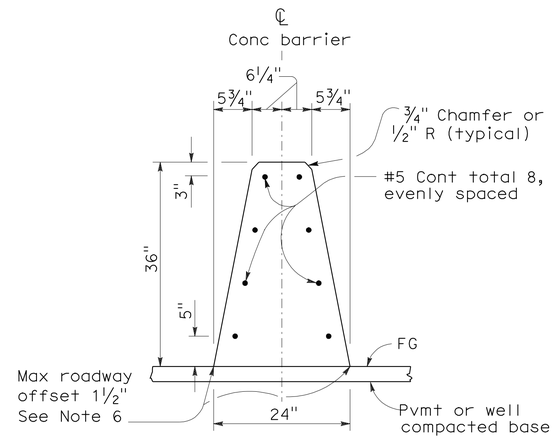

CONCRETE BARRIER TYPE 60

NOTES:

1. See Standard Plan A76B for details of Concrete Barrier Type 60 end anchors, connection to structures and transitions to Concrete Barrier Type 50 and Concrete Barrier Type 60S.
2. See Standard Plan A76C for Concrete Barrier Type 60 transitions at bridge column and sign pedestals.
3. Where glare screen is required on Concrete Barrier Type 60, use Concrete Barrier Type 60G.
4. Where the concrete barrier is added to the face of existing concrete structure, match existing weep holes.
5. Expansion joints in concrete barrier shall be located at all deck, pavement and principal wall joints. Expansion joint filler material shall be the same size as joint or ½" minimum.
6. Where roadway offset is greater than 1½", see Concrete Barrier Type 60C.
7. Barrier delineation to be used when required by the Special Provisions.
8. Spacing of barrier markers to match spacing of raised pavement markers on the adjacent median edgeline pavement delineation.
9. Reinforcing stirrup not required for roadway offsets less than 1'-0".
10. For roadway surfaces offset greater than 1½" to 3", no rebars required. For roadway surfaces offset greater than 3" to 8" use two #4 rebars at 3" above the lower roadway surface. For roadway surfaces offset greater than 8" to 12", use two #4 rebars at 3" above the lower roadway surface and two #4 rebars at 8" above the lower roadway surface. For roadway surfaces offset greater than 12" to 36", use two #4 rebars at 3" above the lower roadway surface and two #4 rebars at every 8" increment vertical spacing above the first two #4 rebars.

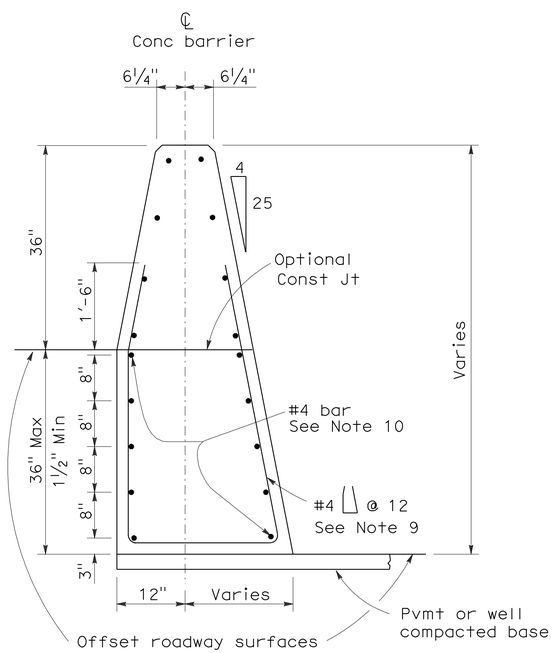

CONCRETE BARRIER TYPE 60C

Details similar to Type 60 except as noted.
Concrete barrier end anchor when necessary.
36" roadway surfaces offset shown.

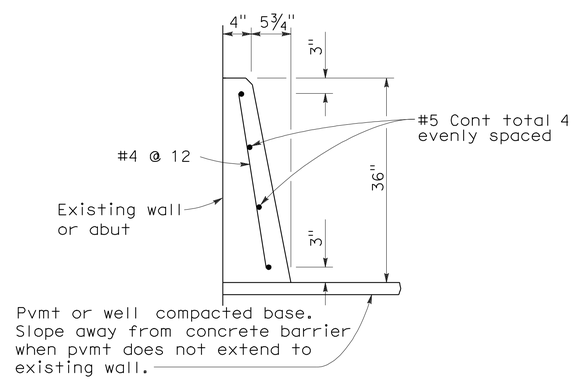

CONCRETE BARRIER TYPE 60D

STATE OF CALIFORNIA
DEPARTMENT OF TRANSPORTATION

CONCRETE BARRIER TYPE 60

NO SCALE

RSP A76A DATED JUNE 6, 2008 SUPERSEDES STANDARD PLAN A76A
DATED MAY 1, 2006 - PAGE 29 OF THE STANDARD PLANS BOOK DATED MAY 2006.

REVISED STANDARD PLAN RSP A76A

2006 REVISED STANDARD PLAN RSP A76A

5-21-08

DIST	COUNTY	ROUTE	POST MILES TOTAL PROJECT	SHEET NO.	TOTAL SHEETS
04	SM	280	10.7/11.0	26	83

Randell D. Hiatt
REGISTERED CIVIL ENGINEER

June 6, 2008
PLANS APPROVAL DATE

REGISTERED PROFESSIONAL ENGINEER
Randell D. Hiatt
No. C50200
Exp. 6-30-09
CIVIL
STATE OF CALIFORNIA

The State of California or its officers or agents shall not be responsible for the accuracy or completeness of electronic copies of this plan sheet.

To accompany plans dated 1-18-11

NOTES:

1. When necessary to place dike in front of face of guard railing, only Type C dike may be used. For dike details, see Standard Plan A87B.
2. For standard railing post embedment, see Standard Plans A77C3.
3. Guard railing delineation to be used where shown on the Project Plans.
4. When dike or curb is placed under guard railing, the maximum height of the dike or curb shall be 4". Mountable dike should not be used. For dike and curb details, see Revised Standard Plans RSP A87A and Standard Plan A87B.
5. For details of typical distance between the face of rail and hinge point, see Standard Plan A77C3.

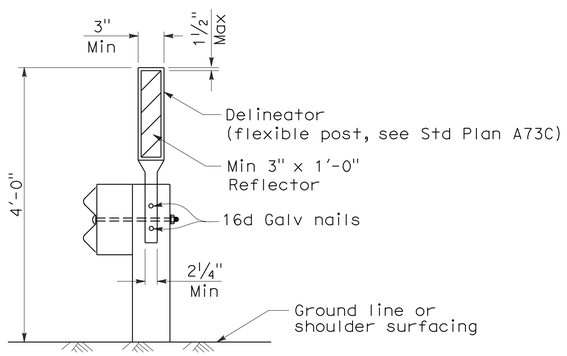

GUARD RAILING DELINEATION

See Note 3

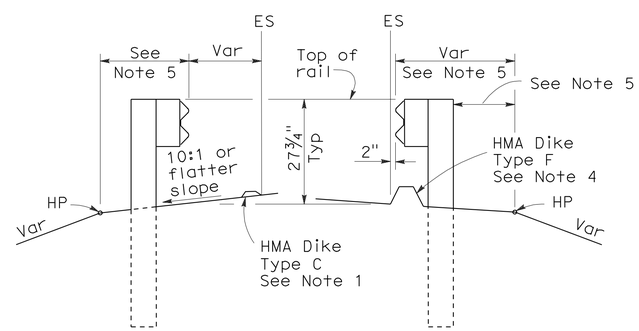

DIKE POSITIONING

See Note 1

STATE OF CALIFORNIA
DEPARTMENT OF TRANSPORTATION

METAL BEAM GUARD RAILING TYPICAL RAILING DELINEATION AND DIKE POSITIONING DETAILS

NO SCALE

RSP A77C4 DATED JUNE 6, 2008 SUPERSEDES STANDARD PLAN A77C4
DATED MAY 1, 2006 - PAGE 47 OF THE STANDARD PLANS BOOK DATED MAY 2006.

REVISED STANDARD PLAN RSP A77C4

2006 REVISED STANDARD PLAN RSP A77C4

12-10-07

DIST	COUNTY	ROUTE	POST MILES TOTAL PROJECT	SHEET NO.	TOTAL SHEETS
04	SM	280	10.7/11.0	27	83

Randell D. Hiatt
REGISTERED CIVIL ENGINEER

June 6, 2008
PLANS APPROVAL DATE

REGISTERED PROFESSIONAL ENGINEER
Randell D. Hiatt
No. C50200
Exp. 6-30-09
CIVIL
STATE OF CALIFORNIA

The State of California or its officers or agents shall not be responsible for the accuracy or completeness of electronic copies of this plan sheet.

To accompany plans dated 1-18-11

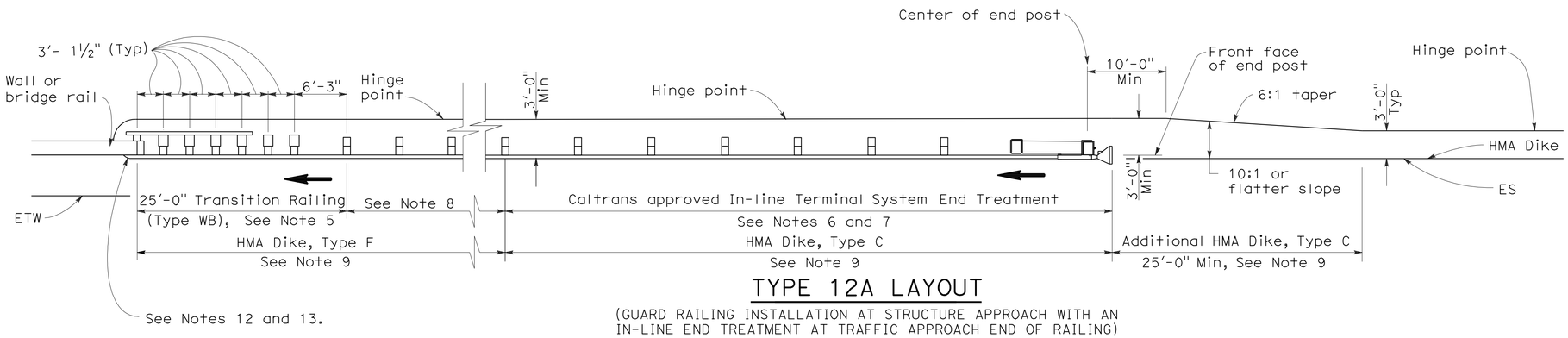

TYPE 12A LAYOUT

(GUARD RAILING INSTALLATION AT STRUCTURE APPROACH WITH AN IN-LINE END TREATMENT AT TRAFFIC APPROACH END OF RAILING)
See Notes 10

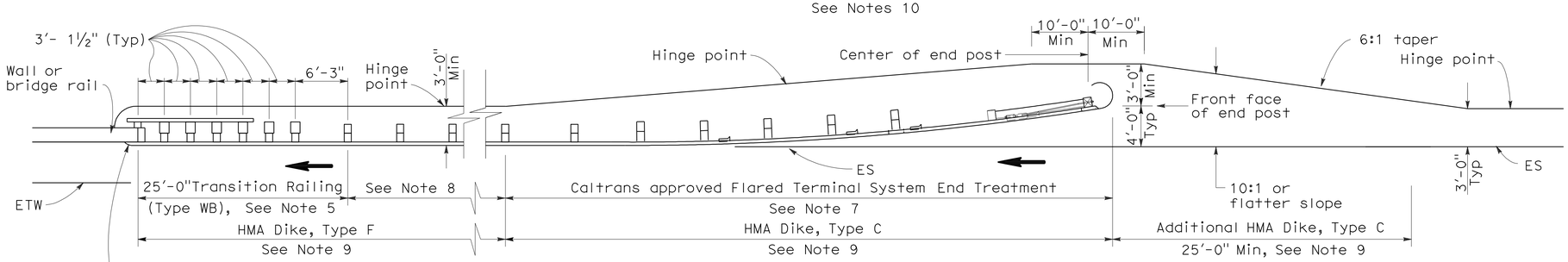

TYPE 12B LAYOUT

(GUARD RAILING INSTALLATION AT STRUCTURE APPROACH WITH A FLARED END TREATMENT AT TRAFFIC APPROACH END OF RAILING)
See Notes 10

NOTES:

1. Line post, blocks and hardware to be used are shown on Standard Plans A77A1, A77A2, A77B1, A77C1 and A77C2.
2. Guard rail post spacing to be 6'-3" center to center, except as otherwise noted.
3. Except as noted, line posts are 6" x 8" x 6'-0" wood with 6" x 8" x 1'-2" wood blocks. W6 x 9 steel posts, 6'-0" in length, with 6" x 8" x 1'-2" notched wood blocks or plastic blocks may be used for 6" x 8" x 6'-0" wood posts with 6" x 8" x 1'-2" wood blocks where applicable and when specified.
4. Direction of adjacent traffic indicated by ➡.
5. For Transition Railing (Type WB) details for Types 12A and 12B Layouts, see Standard Plan A77J4.
6. In-line Terminal System End Treatments are used where site conditions will not accommodate a flared end treatment.
7. The type of terminal system end treatment to be used will be shown on the Project Plans.
8. Dependent on site conditions (embankment height, side slopes, or other fixed objects), it may be advisable to construct additional guard railing (a length equal to multiples of 12'-6" with 6'-3" post spacing) between the transition railing and end treatment.
9. Where placement of dike is required with guard railing installations, see Revised Standard Plan RSP A77C4 for dike positioning details.
10. Type 12A or Type 12B Layouts are typically used:
    a. To the right of approaching traffic, at the end of a structure, on two-lane conventional highway where the roadbed width across the structure is less than 40 feet.
    b. To the left of approaching traffic, at the end of a structure, on two-lane conventional highway where the roadbed width across the structure is less than 40 feet.
    c. To the right of approaching traffic at the end of each structure on multilane freeways or expressways with separate adjacent or parallel bridges.
    d. To the right of approaching traffic at the end of the structure on multilane freeways or expressways with decked median on the bridge.
11. See Revised Standard Plan RSP A77F3 for typical layout used left of approaching traffic at the ends of each structure on multilane freeways or expressways with separate adjacent or parallel bridges.
12. For additional details of typical connections to bridge rail, see Connection Detail AA on Revised Standard Plans RSP A77J1 and RSP A77J2 and Connection Detail FF on Standard Plans A77K1 and A77K2.
13. For additional details of a typical connection to walls or abutments, see Standard Plan A77J3.

STATE OF CALIFORNIA
DEPARTMENT OF TRANSPORTATION

METAL BEAM GUARD RAILING TYPICAL LAYOUTS FOR STRUCTURE APPROACH

NO SCALE

RSP A77F1 DATED JUNE 6, 2008 SUPERSEDES STANDARD PLAN A77F1
DATED MAY 1, 2006 - PAGE 54 OF THE STANDARD PLANS BOOK DATED MAY 2006.

REVISED STANDARD PLAN RSP A77F1

2006 REVISED STANDARD PLAN RSP A77F1

12-10-07

DIST	COUNTY	ROUTE	POST MILES TOTAL PROJECT	SHEET NO.	TOTAL SHEETS
04	SM	280	10.7/11.0	28	83

Randell D. Hiatt
REGISTERED CIVIL ENGINEER

June 6, 2008
PLANS APPROVAL DATE

REGISTERED PROFESSIONAL ENGINEER
Randell D. Hiatt
No. C50200
Exp. 6-30-09
CIVIL
STATE OF CALIFORNIA

The State of California or its officers or agents shall not be responsible for the accuracy or completeness of electronic copies of this plan sheet.

To accompany plans dated 1-18-11

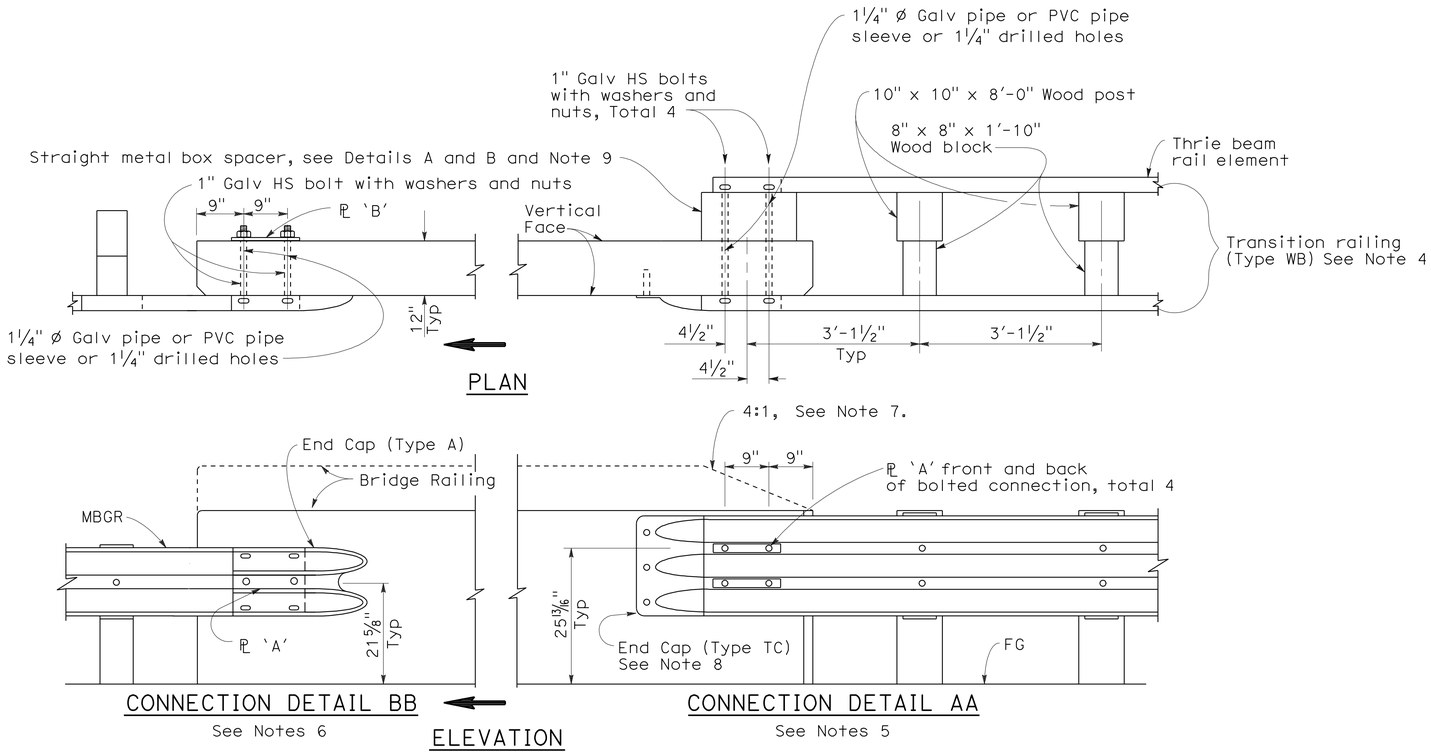

GUARD RAILING CONNECTION TO BRIDGE RAILING WITHOUT SIDEWALK

NOTES:

1. See Revised Standard Plan RSP A77J2 for additional connection details to bridges without sidewalks.
2. Additional details of posts, blocks and hardware are shown on Standard Plan A77B1, A77C1 and A77C2.
3. Direction of adjacent traffic indicated by ➡.
4. For additional details of Transition Railing (Type WB), see Standard Plan A77J4. Transition Railing (Type WB) transitions the 12 gage w-beam standard railing section of guard railing to a heavier gage nested thrie beam railing section which is connected to the concrete bridge railing.
5. For typical use of Connection Detail AA, see Layout Types 12A and 12B on Revised Standard Plan RSP A77F1, Layout Types 12C and 12D on Standard Plan A77F2, and Layout Type 12E on Revised Standard Plan RSP A77F3.
6. For typical use of Connection Detail BB, see Layout Type 12D (structure departure railing connection) on Standard Plan A77F2 and Layout Type 12DD on Standard Plan A77F5.
7. Where the height of the bridge railing exceeds the height of the thrie beam railing by more than 1" at Connection Detail AA, taper the top of the end of the bridge railing at 4:1 to match the top elevation of the thrie beam rail.
8. For details of End Cap (Type TC), see Standard Plan A77J4.
9. See Standard Plan A77J4 for additional details regarding depth dimension for straight metal box spacer.

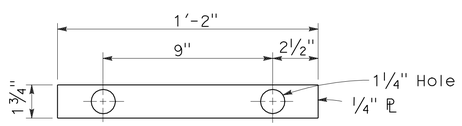

PLATE 'A'

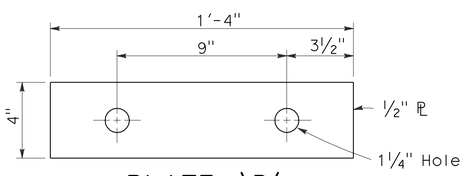

PLATE 'B'
(For backside of connection BB)

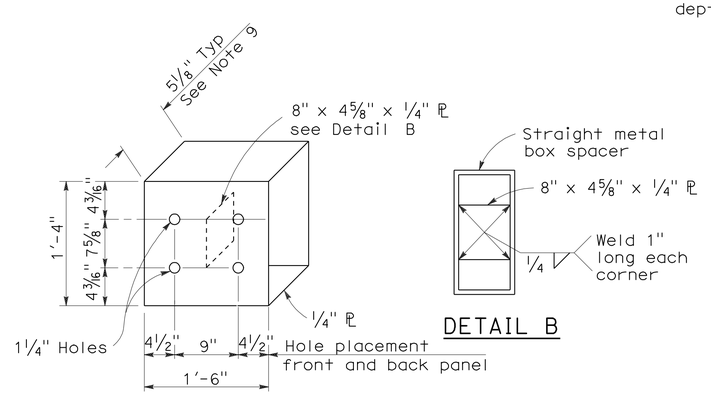

DETAIL B

DETAIL A

STRAIGHT METAL BOX SPACER

STATE OF CALIFORNIA
DEPARTMENT OF TRANSPORTATION

METAL BEAM GUARD RAILING CONNECTIONS TO BRIDGE RAILINGS WITHOUT SIDEWALKS DETAILS No.1

NO SCALE

RSP A77J1 DATED JUNE 6, 2008 SUPERSEDES STANDARD PLAN A77J1
DATED MAY 1, 2006 - PAGE 72 OF THE STANDARD PLANS BOOK DATED MAY 2006.

REVISED STANDARD PLAN RSP A77J1

2006 REVISED STANDARD PLAN RSP A77J1

12-10-07

DIST	COUNTY	ROUTE	POST MILES TOTAL PROJECT	SHEET NO.	TOTAL SHEETS
04	SM	280	10.7/11.0	29	83

Randell D. Hiatt
REGISTERED CIVIL ENGINEER

June 5, 2009
PLANS APPROVAL DATE

REGISTERED PROFESSIONAL ENGINEER
Randell D. Hiatt
No. C50200
Exp. 6-30-09
CIVIL
STATE OF CALIFORNIA

The State of California or its officers or agents shall not be responsible for the accuracy or completeness of electronic copies of this plan sheet.

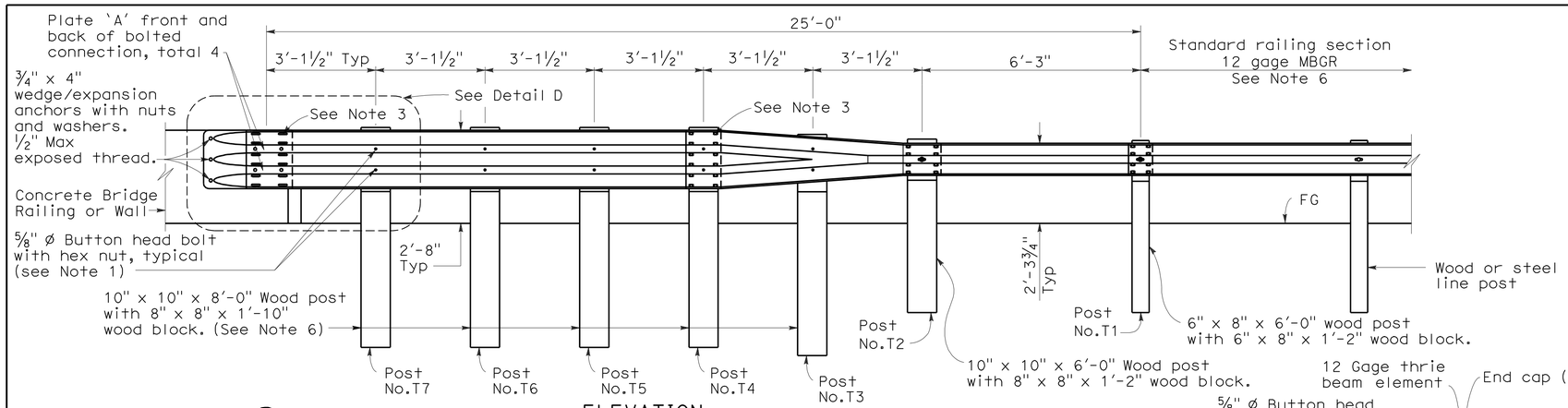

ELEVATION

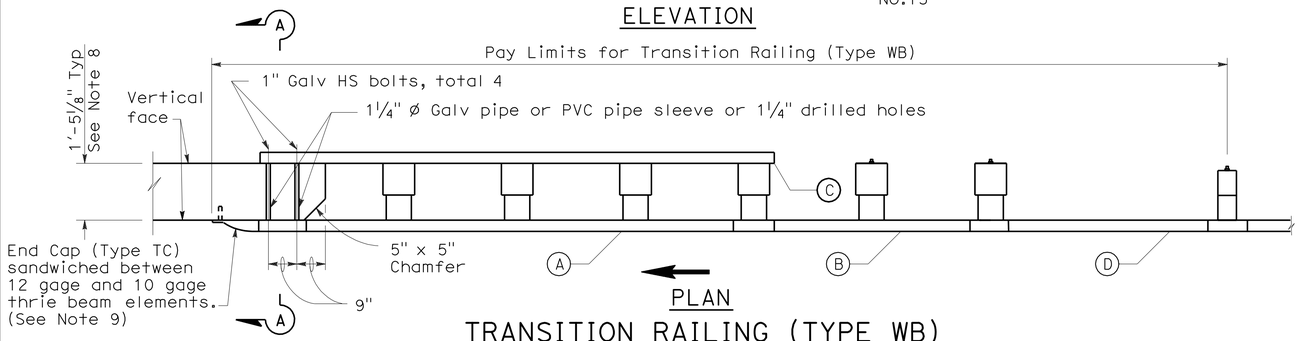

PLAN

TRANSITION RAILING (TYPE WB)

(No Blockout Attachment)

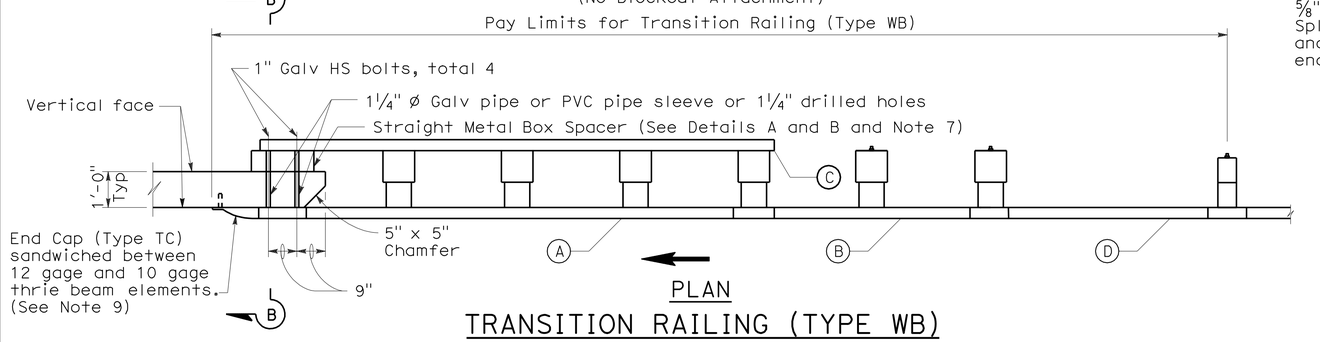

PLAN

TRANSITION RAILING (TYPE WB)

(Blockout Attachment)

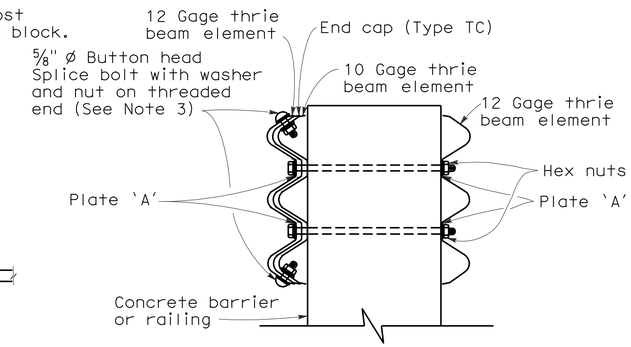

SECTION A-A

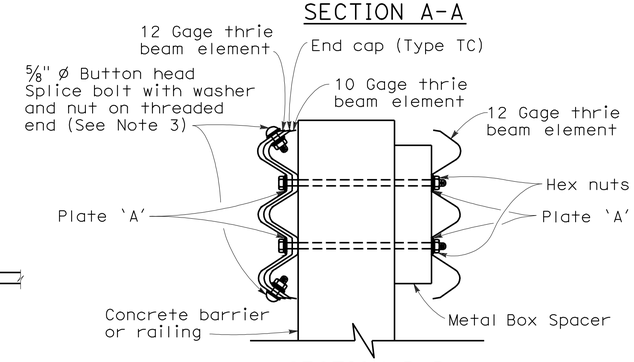

SECTION B-B

LEGEND

(A) Nested thrie beam elements (one 12 gage element nested over one 10 gage element).

(B) One 10 gage "W" beam to thrie beam element.

(C) One 12 gage thrie beam element.

(D) One 10 gage "W" beam rail element (7'-3½" length)

10 gage = 0.135" thick

12 gage = 0.108" thick

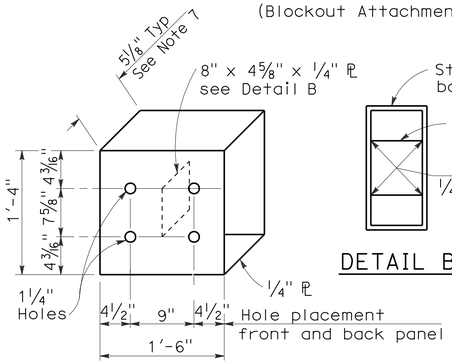

DETAIL A

STRAIGHT METAL BOX SPACER

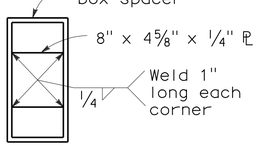

DETAIL B

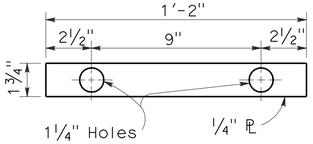

DETAIL C

PLATE 'A'

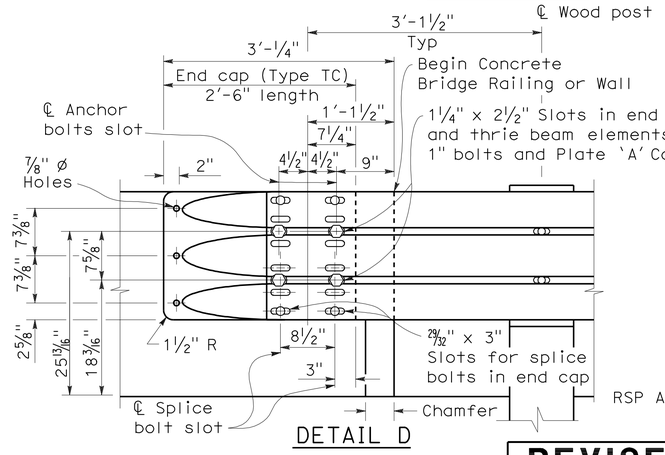

DETAIL D

NOTES:

To accompany plans dated 1-18-11

1. Use 5/8 " ø Button head bolts and hex nuts for connections to posts. No washer on rail face for bolted connections to post.
2. The nested rail elements, end cap, and 'W' beam to thrie beam element may be spliced together prior to bolting the elements to the wood post and concrete barrier or railing.
3. Exterior splice bolt holes for rail element splices at Post No.T4 and the connection to the concrete barrier or railing shall be the standard 29/32 " x 1 1/8 " slot size. Interior splice bolt holes at these locations may be increased up to 1 1/4 " ø. Only the top 2 and the bottom 2 splice bolts with washers and nuts are required for rail splices at Post No.T4 and the connection to the concrete barrier or railing.
4. Direction of adjacent traffic indicated by →.
5. The top elevation of Post Nos.T2 through T7 shall not project more than 1" above the top elevation of the rail element.
6. Typically, the railing connected to Transition Railing (Type WB) will be either standard railing section of metal beam guard railing or an approved Caltrans end treatment attached to Post No.T1.
7. The depth of the metal box spacer varies from the 5 1/8 " to 1 1/2 " and is dependent on the width of the concrete railing or wall. The combined dimension for the depth of the metal box spacer plus the width of railing or wall is typically 17 1/8 ". Where the space between the backside of the concrete railing or wall and the rear thrie beam element is less than 1 1/2 ", metal plates similar to Plate 'A' are to be used as spacers.
8. Where the width of the concrete railing or wall is greater than 17 1/8 ", wood blocks are to be used to fill the space created between the backside of Posts No.4 through No.7 and the rear thrie beam element. These wood blocks shall be 8" in width and 1'-2" in length. The dimension between the front thrie beam element and the rear thrie beam element is to match the width of the concrete railing or wall.
9. End cap may be installed over 12 gage and 10 gage thrie beam elements where transition railing is installed on the departure end of bridge railing.

STATE OF CALIFORNIA
DEPARTMENT OF TRANSPORTATION

METAL BEAM GUARD RAILING TRANSITION RAILING (TYPE WB)

NO SCALE

RSP A77J4 DATED JUNE 5, 2009 SUPERSEDES RSP A77J4 DATED JUNE 6, 2008 AND STANDARD PLAN A77J4 DATED MAY 1, 2006 - PAGE 75 OF THE STANDARD PLANS BOOK DATED MAY 2006.

REVISED STANDARD PLAN RSP A77J4

2006 REVISED STANDARD PLAN RSP A77J4

DIST	COUNTY	ROUTE	POST MILES TOTAL PROJECT	SHEET No.	TOTAL SHEETS
04	SM	280	10.7/11.0	30	83

Randell D. Hiatt
REGISTERED CIVIL ENGINEER

June 6, 2008
PLANS APPROVAL DATE

REGISTERED PROFESSIONAL ENGINEER
Randell D. Hiatt
No. C50200
Exp. 6-30-09
CIVIL
STATE OF CALIFORNIA

The State of California or its officers or agents shall not be responsible for the accuracy or completeness of electronic copies of this plan sheet.

To accompany plans dated 1-18-11

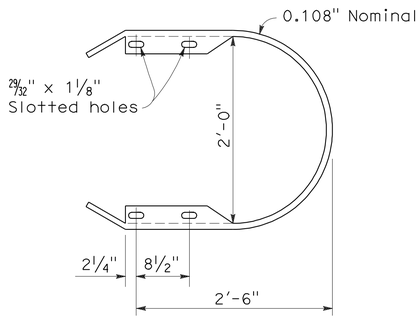

RETURN CAP
(TYPE TA)

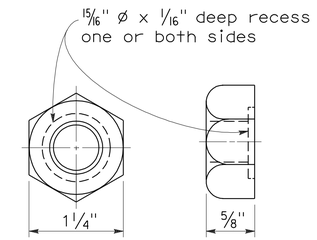

5/8" ø RECESS NUT

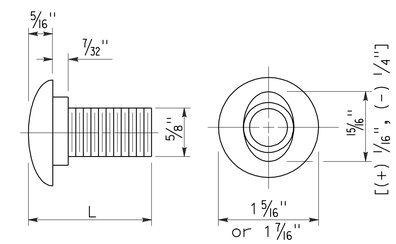

5/8" ø BUTTON HEAD BOLT

L	THREAD LENGTH
1 1/4"	full thread length
2"	full thread length
9 1/2"	4" Min thread length
18"	4" Min thread length

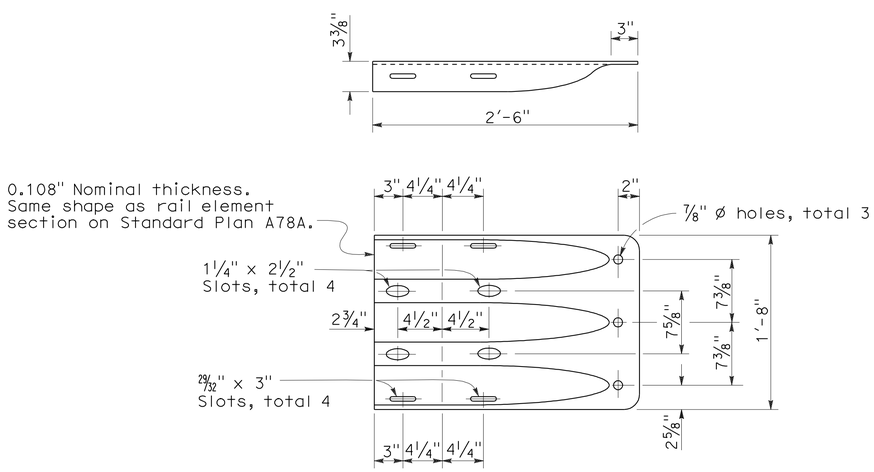

END CAP
(TYPE TC)

STATE OF CALIFORNIA
DEPARTMENT OF TRANSPORTATION

THRIE BEAM BARRIER STANDARD HARDWARE DETAILS

NO SCALE

RSP A78C1 DATED JUNE 6, 2008 SUPERSEDES STANDARD PLAN A78C1
DATED MAY 1, 2006 - PAGE 85 OF THE STANDARD PLANS BOOK DATED MAY 2006.

REVISED STANDARD PLAN RSP A78C1

2006 REVISED STANDARD PLAN RSP A78C1

4-21-08

DIST	COUNTY	ROUTE	POST MILES TOTAL PROJECT	SHEET NO.	TOTAL SHEETS
04	SM	280	10.7/11.0	31	83

Randell D. Hiatt
REGISTERED CIVIL ENGINEER

June 6, 2008
PLANS APPROVAL DATE

REGISTERED PROFESSIONAL ENGINEER
Randell D. Hiatt
No. C50200
Exp. 6-30-09
CIVIL
STATE OF CALIFORNIA

The State of California or its officers or agents shall not be responsible for the accuracy or completeness of electronic copies of this plan sheet.

To accompany plans dated 1-18-11

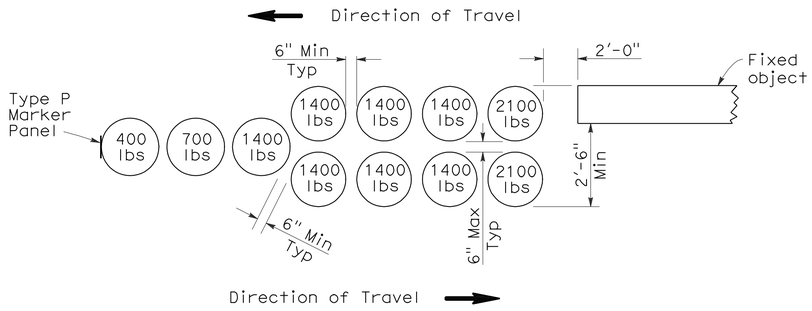

ARRAY 'B11'

Approach speed less than 45 mph

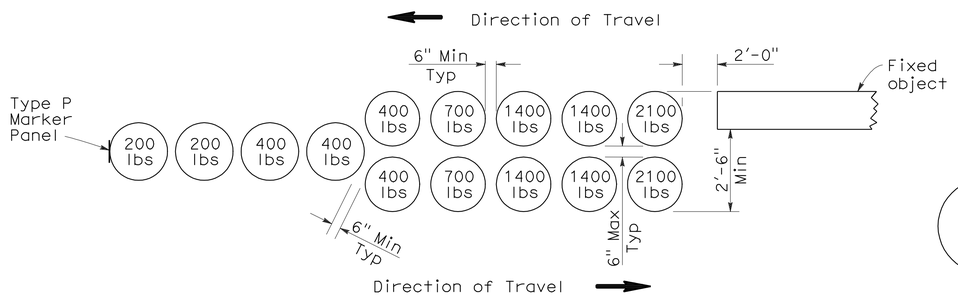

ARRAY 'B14'

Approach speed 45 mph or more

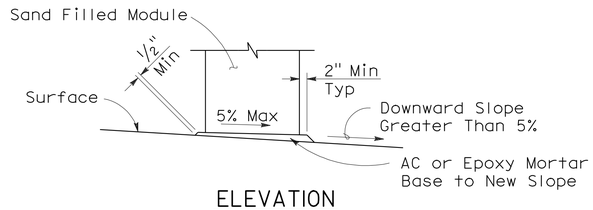

ELEVATION

SLOPED SEAT DETAIL

(See Note 5)

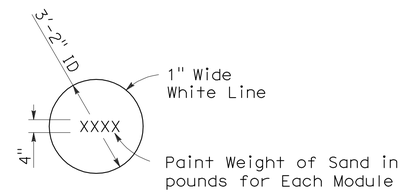

PAINTING DETAIL

(See Note 6)

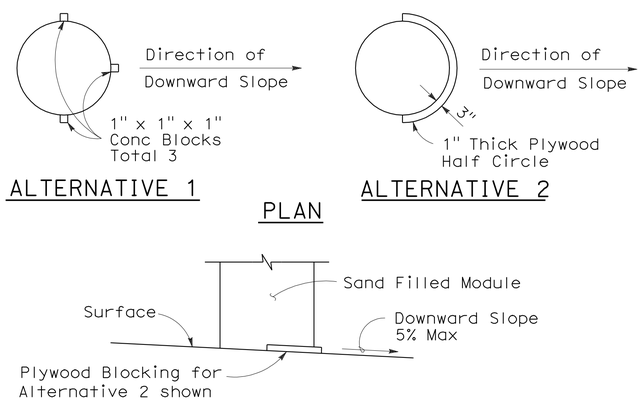

ALTERNATIVE 1

ALTERNATIVE 2

PLAN

ELEVATION

BRIDGE DECK MODULE BLOCKING DETAILS

(See Note 7)

NOTES:

1. (XXX) Indicates module location and weight of sand in pounds for each module. Module spacing is based on the greater diameter of the module.
2. All sand weights are nominal.
3. Each module is to contain amount of sand indicated, supported according to the manufacturer's instructions.
4. Bidirectional crash cushion arrays may be angled toward approaching traffic. Amount of angle not to exceed 10 degrees.
5. Modules shall be placed on asphalt concrete, epoxy mortar or concrete surface. Modules to be placed on surfacing with greater than 5% downward slope shall be seated as shown.
6. Mass of sand and outline of each module shall be painted on the surface at each module location.
7. Module blocking, epoxied to the deck surface, is required for all modules placed on bridge decks. Two acceptable alternatives are shown. Other alternatives recommended by the manufacturer and approved by the Engineer will be accepted.
8. Place the Type P marker panel so that the bottom of the panel is at the bottom of the module.
9. Approach speeds indicated conform to NCHRP Report criteria.

STATE OF CALIFORNIA
DEPARTMENT OF TRANSPORTATION

CRASH CUSHION, SAND FILLED (BIDIRECTIONAL)

NO SCALE

RSP A81C DATED JUNE 6, 2008 SUPERSEDES STANDARD PLAN A81C
DATED MAY 1, 2006 - PAGE 101 OF THE STANDARD PLANS BOOK DATED MAY 2006.

REVISED STANDARD PLAN RSP A81C

2006 REVISED STANDARD PLAN RSP A81C

5-15-08

DIST	COUNTY	ROUTE	POST MILES TOTAL PROJECT	SHEET NO.	TOTAL SHEETS
04	SM	280	10.7/11.0	32	83

Randell D. Hiatt
REGISTERED CIVIL ENGINEER

June 6, 2008
PLANS APPROVAL DATE

REGISTERED PROFESSIONAL ENGINEER
Randell D. Hiatt
No. C50200
Exp. 6-30-09
CIVIL
STATE OF CALIFORNIA

The State of California or its officers or agents shall not be responsible for the accuracy or completeness of electronic copies of this plan sheet.

To accompany plans dated 1-18-11

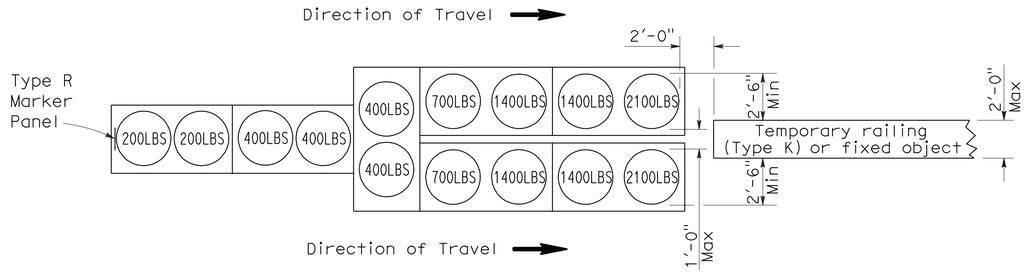

ARRAY `TU14'

Approach speed 45 mph or more

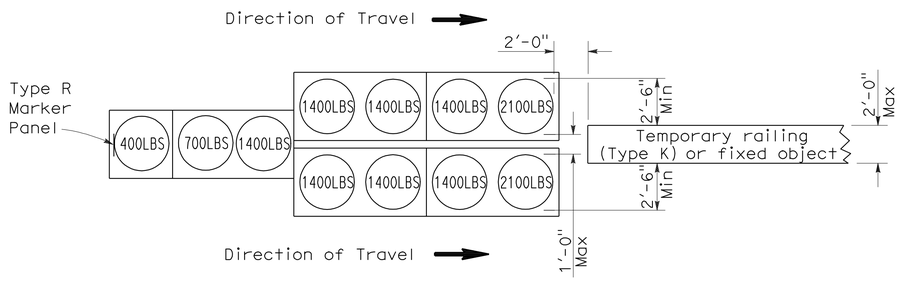

ARRAY `TU11'

Approach speed less than 45 mph

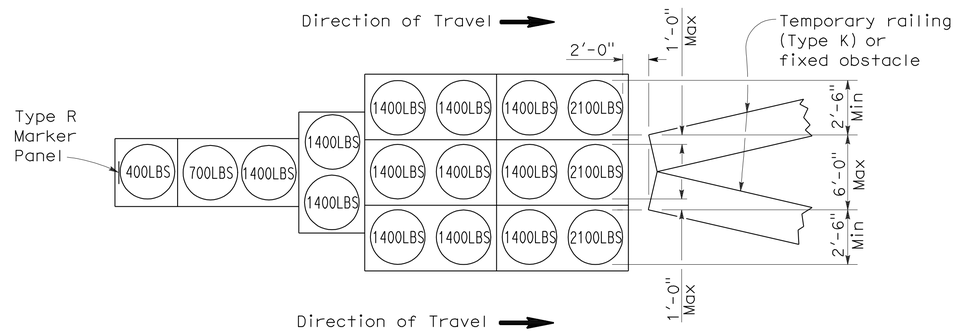

ARRAY `TU17'

Approach speed less than 45 mph

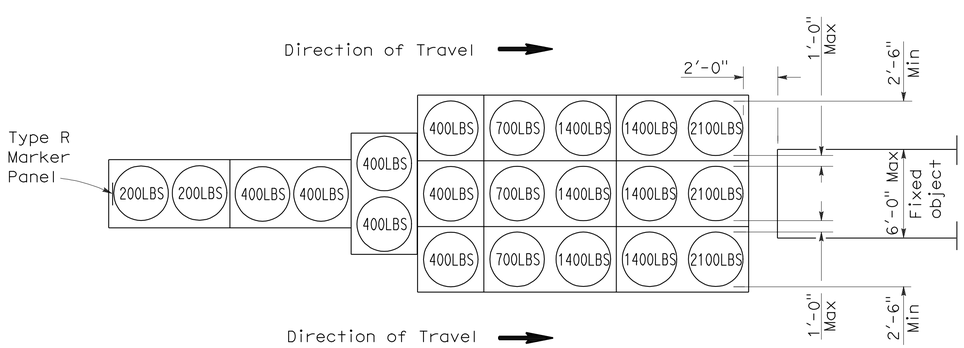

ARRAY `TU21'

Approach speed 45 mph or more

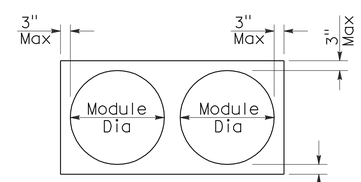

PLAN

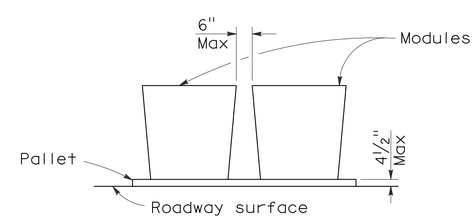

ELEVATION

CRASH CUSHION PALLET DETAIL

See Note 7

NOTES:

1. (XXX) Indicates sand filled module location and weight of sand in pounds for each module. Module spacing is based on the greater diameter of the module.
2. All sand weights are nominal.
3. Temporary crash cushion arrays shall not encroach on the traveled way.
4. Place the top of Type R marker panel 1" below the module lid.
5. Refer to Standard Plan A73B for marker details.
6. Approach speeds indicated conform to NCHRP 350 Report criteria.
7. Use of pallets is optional.

STATE OF CALIFORNIA
DEPARTMENT OF TRANSPORTATION

TEMPORARY CRASH CUSHION, SAND FILLED (UNIDIRECTIONAL)

NO SCALE

RSP T1A DATED JUNE 6, 2008 SUPERSEDES STANDARD PLAN T1A
DATED MAY 1, 2006 - PAGE 211 OF THE STANDARD PLANS BOOK DATED MAY 2006.

REVISED STANDARD PLAN RSP T1A

2006 REVISED STANDARD PLAN RSP T1A

DIST	COUNTY	ROUTE	POST MILES TOTAL PROJECT	SHEET NO.	TOTAL SHEETS
04	SM	280	10.7/11.0	33	83

Randell D. Hiatt
REGISTERED CIVIL ENGINEER

June 6, 2008
PLANS APPROVAL DATE

REGISTERED PROFESSIONAL ENGINEER
Randell D. Hiatt
No. C50200
Exp. 6-30-09
CIVIL
STATE OF CALIFORNIA

The State of California or its officers or agents shall not be responsible for the accuracy or completeness of electronic copies of this plan sheet.

To accompany plans dated 1-18-11

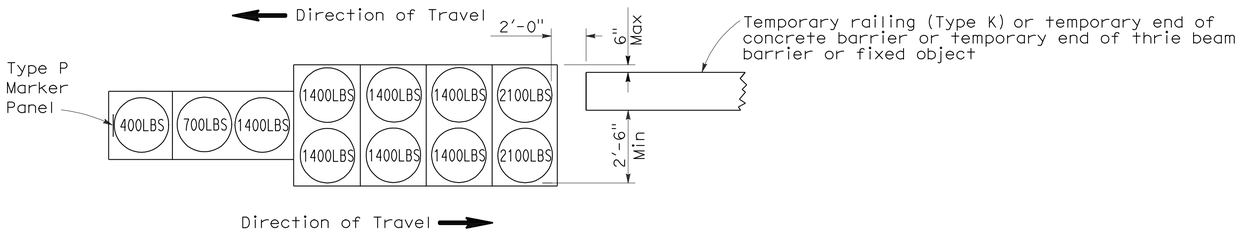

ARRAY 'TB11'

Approach speed less than 45 mph

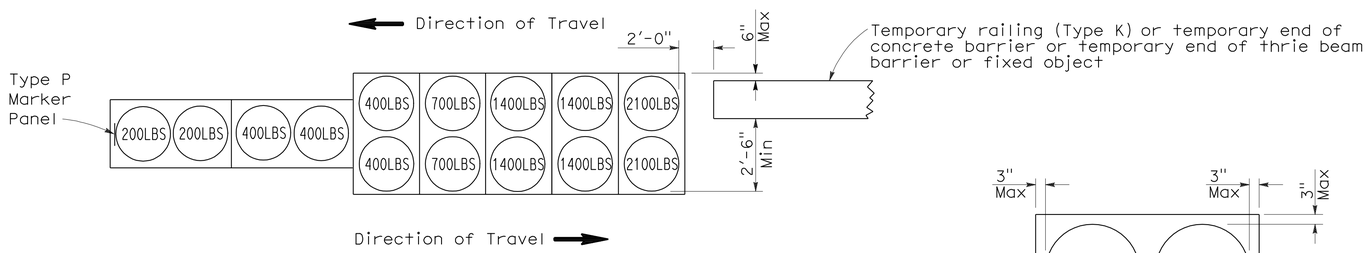

ARRAY 'TB14'

Approach speed 45 mph or more

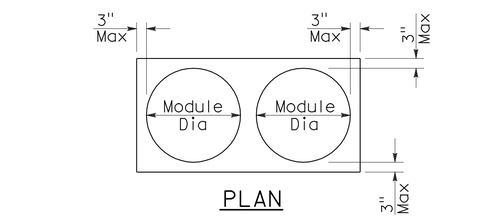

PLAN

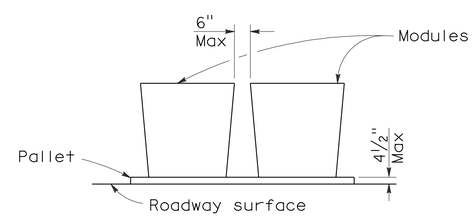

ELEVATION

CRASH CUSHION PALLET DETAIL

See Note 7

NOTES:

1. (XXX) Indicates sand filled module location and weight of sand in pounds for each module. Module spacing is based on the greater diameter of the module.
2. All sand weights are nominal.
3. Temporary crash cushion arrays shall not encroach on the traveled way.
4. Place the Type P marker panel so that the bottom of the panel rests upon the pallet.
5. Refer to Standard Plan A73B for marker details.
6. Approach speeds indicated conform to NCHRP 350 Report criteria.
7. Use of pallets is optional.

STATE OF CALIFORNIA
DEPARTMENT OF TRANSPORTATION

TEMPORARY CRASH CUSHION, SAND FILLED (BIDIRECTIONAL)

NO SCALE

RSP T1B DATED JUNE 6, 2008 SUPERSEDES STANDARD PLAN T1B
DATED MAY 1, 2006 - PAGE 212 OF THE STANDARD PLANS BOOK DATED MAY 2006.

REVISED STANDARD PLAN RSP T1B

2006 REVISED STANDARD PLAN RSP T1B

5-15-08

DIST	COUNTY	ROUTE	POST MILES TOTAL PROJECT	SHEET NO.	TOTAL SHEETS
04	SM	280	10.7/11.0	34	83

Randell D. Hiatt
REGISTERED CIVIL ENGINEER

June 6, 2008
PLANS APPROVAL DATE

REGISTERED PROFESSIONAL ENGINEER
Randell D. Hiatt
No. C50200
Exp. 6-30-09
CIVIL
STATE OF CALIFORNIA

The State of California or its officers or agents shall not be responsible for the accuracy or completeness of electronic copies of this plan sheet.

To accompany plans dated 1-18-11

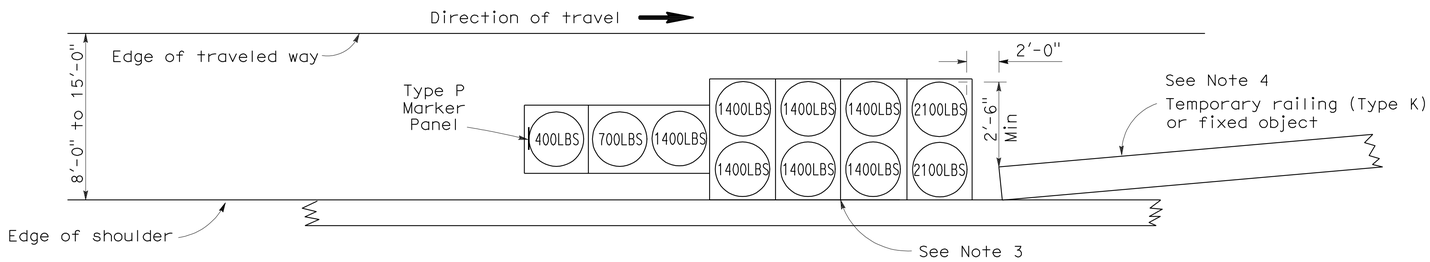

ARRAY 'TS11'

Approach speed less than 45 mph
See Note 9

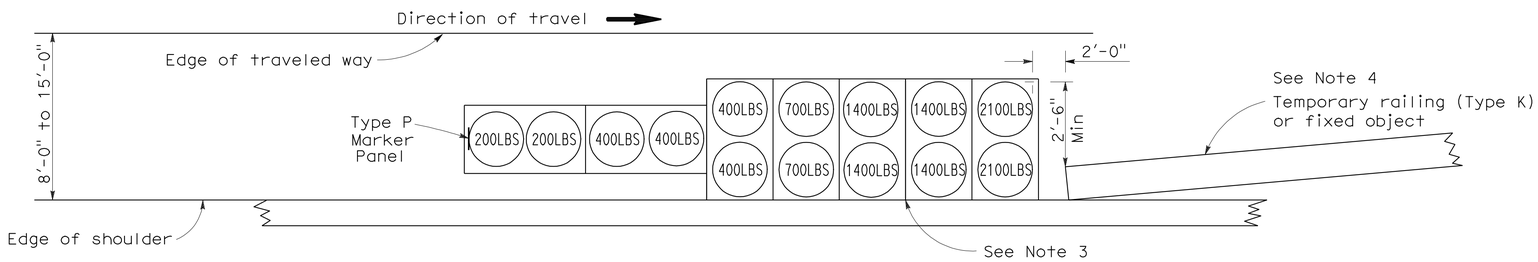

ARRAY 'TS14'

Approach speed 45 mph or more
See Note 9

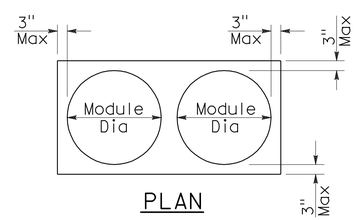

PLAN

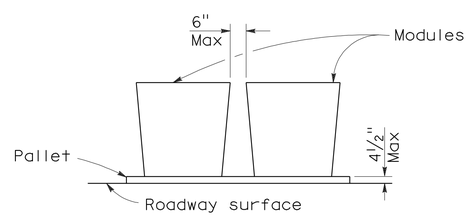

ELEVATION

CRASH CUSHION PALLET DETAIL

See Note 11

NOTES:

1. (XXX) Indicates sand filled module location and weight of sand in pounds for each module. Module spacing is based on the greater diameter of the module.
2. All sand weights are nominal.
3. The temporary crash cushion arrays shown on this plan shall be used only in locations where there will be traffic on one side of the temporary crash cushion array.
4. If the fixed object or approach end of the temporary railing is less than 15'-0" from the edge of traveled way, a temporary crash cushion is required in a construction or work zone.
5. Temporary crash cushion arrays shall not encroach on the traveled way.
6. Arrays for median shoulders shall conform to details shown on this plan for outside shoulders.
7. Place the Type P marker panel so that the bottom of the panel rests upon the pallet and faces traffic.
8. Refer to Standard Plan A73B for marker details.
9. For shoulder widths less than 8'-0", appropriate approved crash cushion protection, other than sand filled modules, shall be provided at fixed objects and at approach ends of temporary railing. The specific type of crash cushion shall be as shown on the project plans or as specified in the Special Provisions, or if not shown on the project plans or specified in the Special Provisions, shall be as approved by the Engineer.
10. Approach speeds indicated conform to NCHRP 350 Report criteria.
11. Use of pallets is optional.

STATE OF CALIFORNIA
DEPARTMENT OF TRANSPORTATION

TEMPORARY CRASH CUSHION, SAND FILLED (SHOULDER INSTALLATIONS)

NO SCALE

RSP T2 DATED JUNE 6, 2008 SUPERSEDES STANDARD PLAN T2
DATED MAY 1, 2006 - PAGE 213 OF THE STANDARD PLANS BOOK DATED MAY 2006.

REVISED STANDARD PLAN RSP T2

2006 REVISED STANDARD PLAN RSP T2

DIST	COUNTY	ROUTE	POST MILES TOTAL PROJECT	SHEET NO.	TOTAL SHEETS
04	SM	280	10.7/11.0	35	83

LICENSED LANDSCAPE ARCHITECT

August 15, 2008
PLANS Approval DATE

LICENSED LANDSCAPE ARCHITECT
Robert B. Schott
Signature
11-04-08
Renewal Date
08-11-08
Date
STATE OF CALIFORNIA

The State of California or its officers or agents shall not be responsible for the accuracy or completeness of electronic copies of this plan sheet.

To accompany plans dated 1-18-11

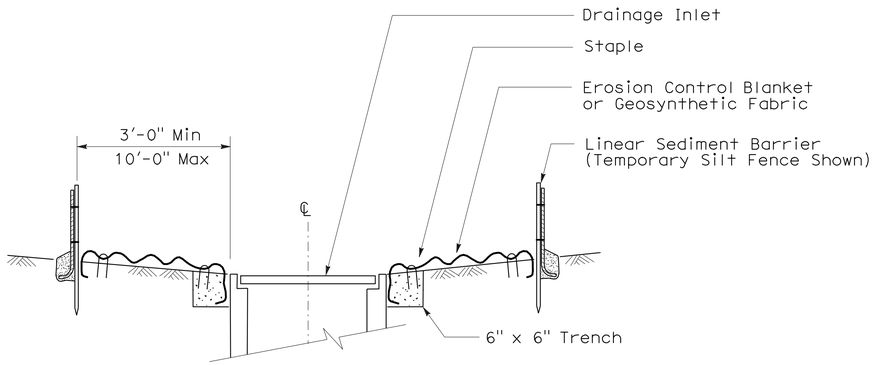

SECTION A-A

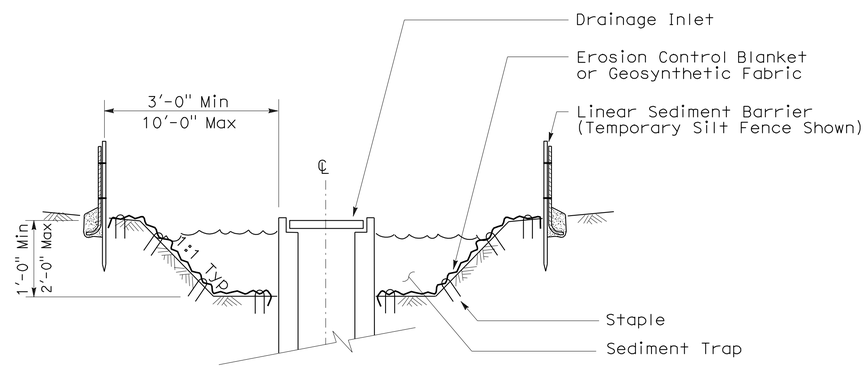

SECTION B-B

NOTES:

1. See Standard Plan T51 for Temporary Silt Fence.
2. Dimensions may vary to fit field conditions.

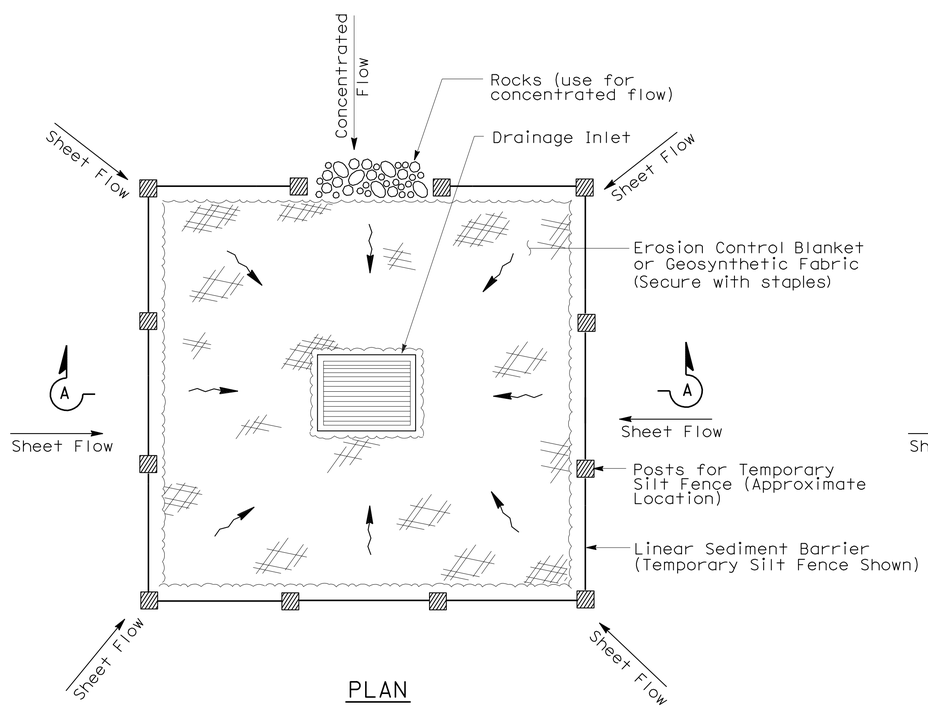

PLAN

TEMPORARY DRAINAGE
INLET PROTECTION (TYPE 1)

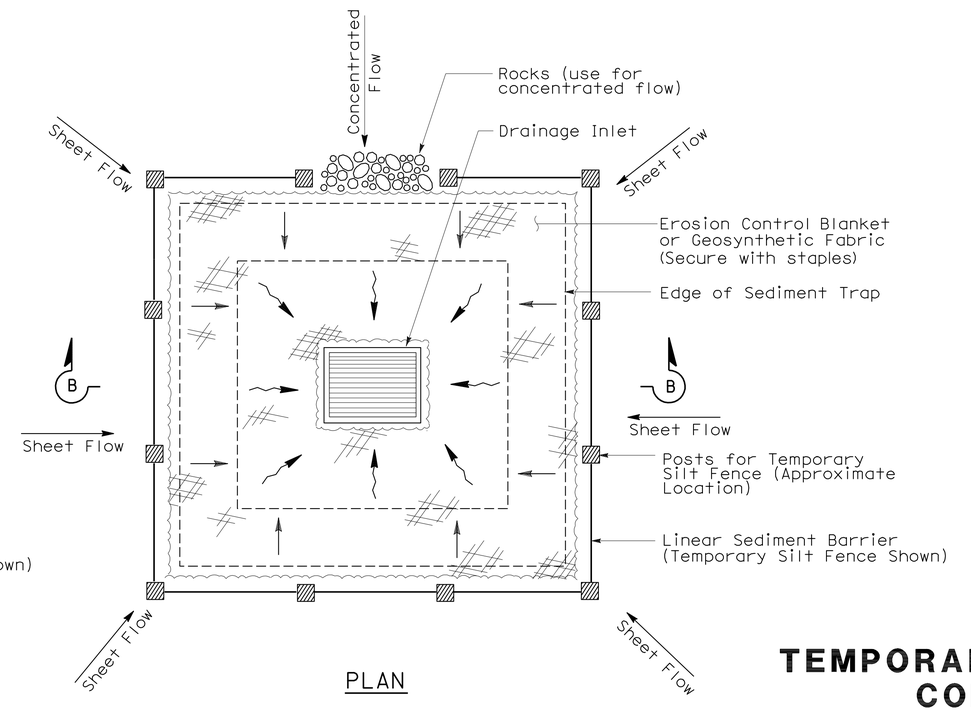

PLAN

TEMPORARY DRAINAGE
INLET PROTECTION (TYPE 2)
(EXCAVATED SEDIMENT TRAP)

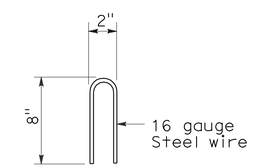

STAPLE DETAIL

STATE OF CALIFORNIA
DEPARTMENT OF TRANSPORTATION

TEMPORARY WATER POLLUTION CONTROL DETAILS (TEMPORARY DRAINAGE INLET PROTECTION)

NO SCALE

NSP T61 DATED AUGUST 15, 2008 SUPPLEMENTS
THE STANDARD PLANS BOOK DATED MAY 2006.

NEW STANDARD PLAN NSP T61

2006 NEW STANDARD PLAN NSP T61

7-11-08

DIST	COUNTY	ROUTE	POST MILES TOTAL PROJECT	SHEET NO.	TOTAL SHEETS
04	SM	280	10.7/11.0	36	83

LICENSED LANDSCAPE ARCHITECT

August 15, 2008
PLANS APPROVAL DATE

The State of California or its officers or agents shall not be responsible for the accuracy or completeness of electronic copies of this plan sheet.

LICENSED LANDSCAPE ARCHITECT — Robert B. Schott — Signature — 11-04-08 Renewal Date — 08-11-08 Date — STATE OF CALIFORNIA

To accompany plans dated 1-18-11

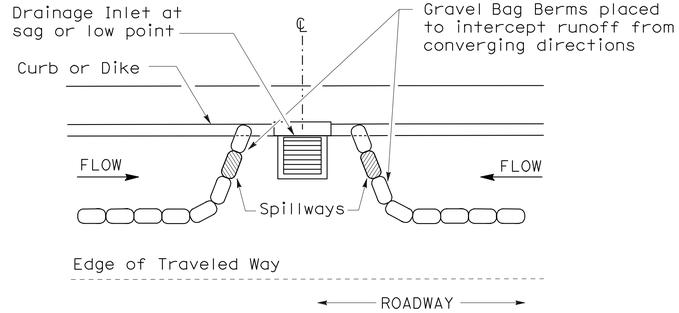

PLAN

CONFIGURATION FOR SAG POINT INLET (GRAVEL BAG BERM)

GRAVEL BAG BERM (TYPE 3A) SPACING TABLE

SLOPE OF ROADWAY (PERCENT)	1 to 3.9	4 to 5.9	6 to 7.9	8 to 10	10+
INTERVAL BETWEEN BERM	100′	75′	50′	25′	12′

For slope of less than 1%, install barriers only if erosion/sediment is prevalent

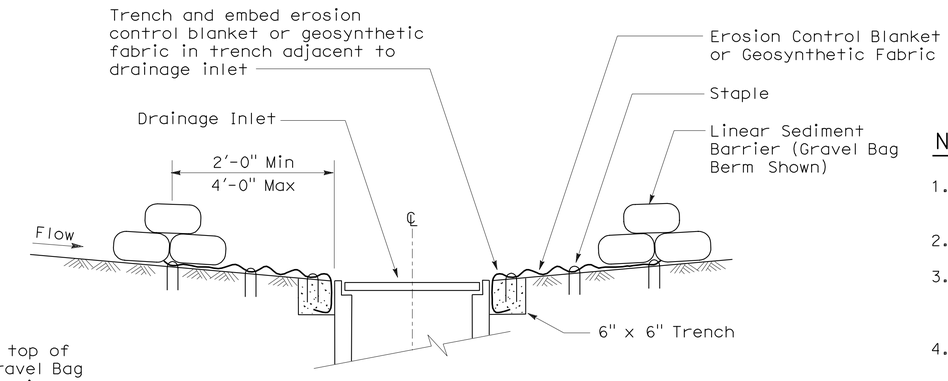

SECTION A-A

NOTES:

1. Place safety cones adjacent to drainage inlet protection.
2. Dimensions may vary to fit field conditions.
3. Install a minimum of 3 gravel bag berms upstream of each drainage inlet to be protected.
4. Position erosion control blanket or geosynthetic fabric at edge of concrete apron and secure in trench.
5. Erosion control blanket or geosynthetic fabric is not required if the area adjacent to the drainage inlet is vegetated or paved.

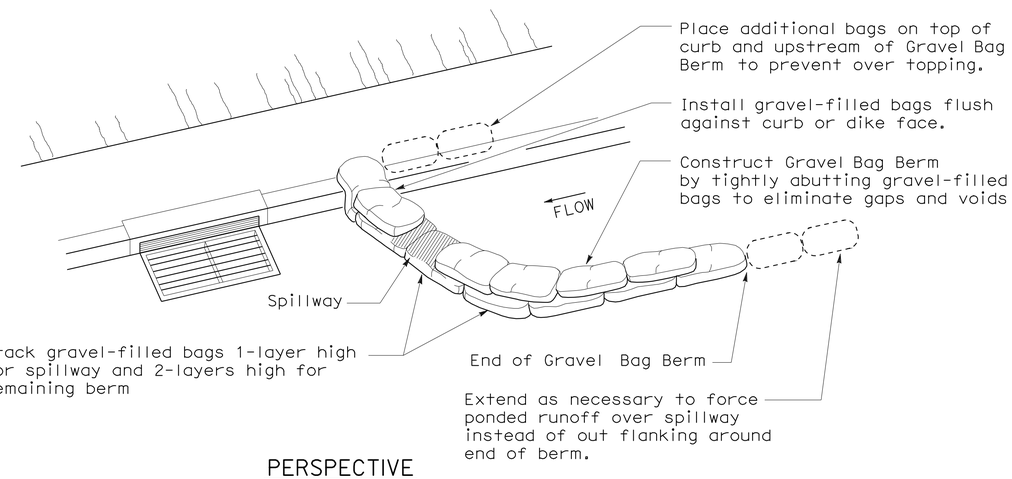

PERSPECTIVE

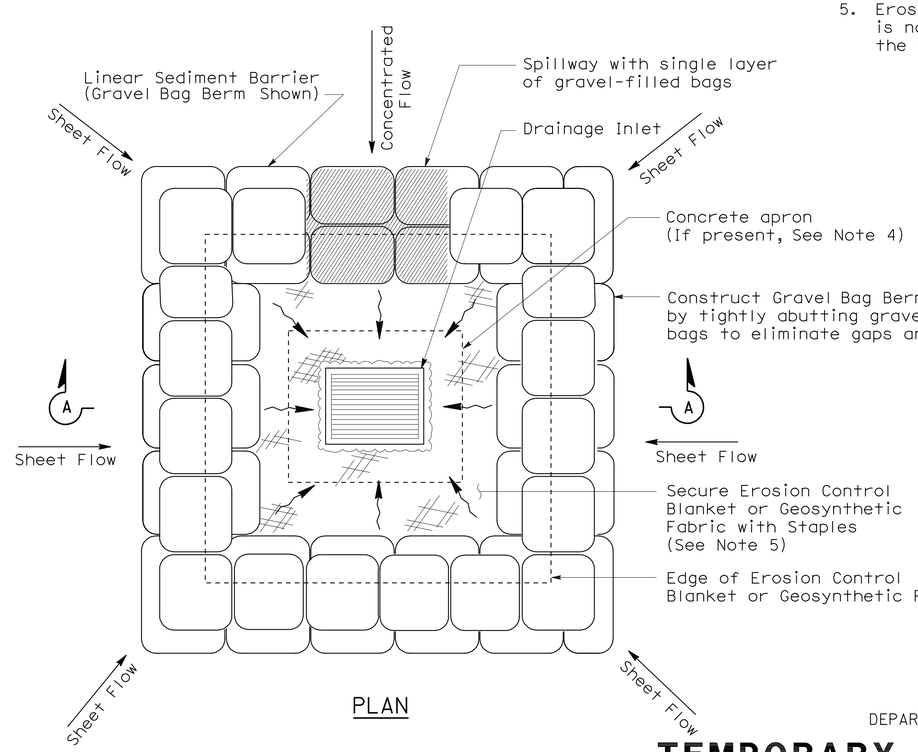

PLAN

TEMPORARY DRAINAGE INLET PROTECTION (TYPE 3B)

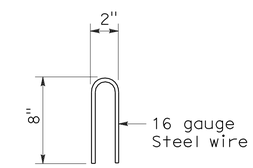

STAPLE DETAIL

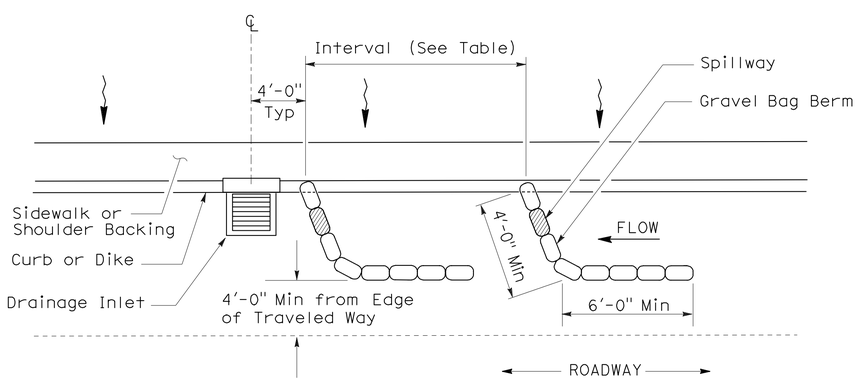

PLAN

TEMPORARY DRAINAGE INLET PROTECTION (TYPE 3A) (GRAVEL BAG BERM)

STATE OF CALIFORNIA
DEPARTMENT OF TRANSPORTATION

TEMPORARY WATER POLLUTION CONTROL DETAILS (TEMPORARY DRAINAGE INLET PROTECTION)

NO SCALE

NSP T62 DATED AUGUST 15, 2008 SUPPLEMENTS THE STANDARD PLANS BOOK DATED MAY 2006.

NEW STANDARD PLAN NSP T62

2006 NEW STANDARD PLAN NSP T62

7-11-08

DIST	COUNTY	ROUTE	POST MILES TOTAL PROJECT	SHEET NO.	TOTAL SHEETS
04	SM	280	10.7/11.0	37	83

Robert B Schott
LICENSED LANDSCAPE ARCHITECT

August 15, 2008
PLANS APPROVAL DATE

The State of California or its officers or agents shall not be responsible for the accuracy or completeness of electronic copies of this plan sheet.

LICENSED LANDSCAPE ARCHITECT — Robert B. Schott — Signature — 11-04-08 Renewal Date — 08-11-08 Date — STATE OF CALIFORNIA

To accompany plans dated 1-18-11

FLEXIBLE SEDIMENT BARRIER SPACING TABLE

SLOPE OF ROADWAY (PERCENT)	0 to 0.9	1 to 1.9	2 to 2.9	3 to 4	5+
INTERVAL BETWEEN BARRIERS	50′	35′	30′	25′	20′
ANGLE FROM FACE OF CURB	70°	70°	70°	45°	45°
SUGGESTED BARRIER LENGTH	6′	6′	6′	6′	6′

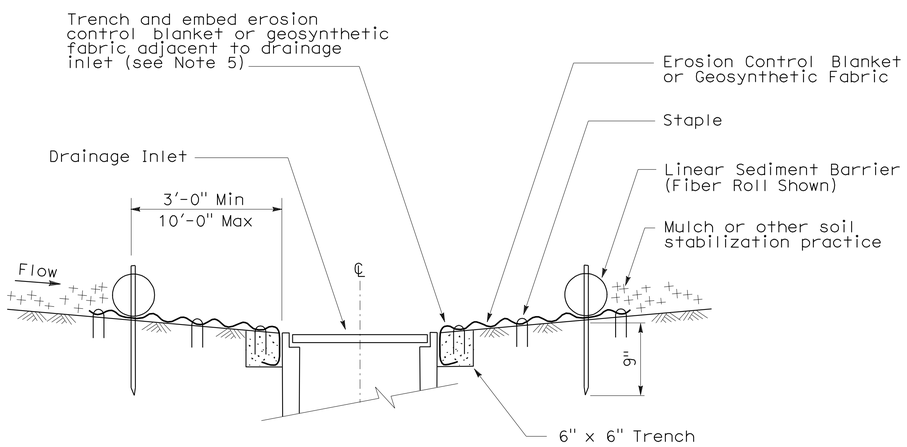

SECTION A-A

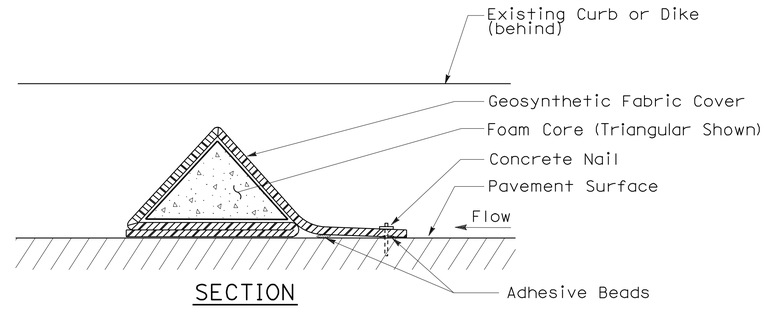

SECTION

FLEXIBLE SEDIMENT BARRIER DETAIL (FOAM BARRIER SHOWN)

NOTES:

1. See Standard Plan T51 for Temporary Silt Fence.
2. Dimensions may vary to fit field conditions.
3. Install a minimum of 3 flexible sediment barriers upstream of each drainage inlet to be protected.
4. Position erosion control blanket or geosynthetic fabric at edge of concrete apron and secure in trench.
5. Erosion control blanket or geosynthetic fabric is not required if the area adjacent to the drainage inlet is vegetated.

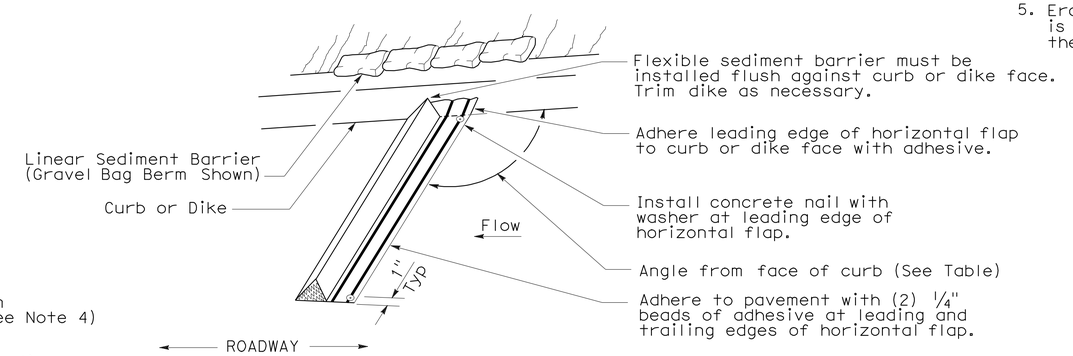

PERSPECTIVE

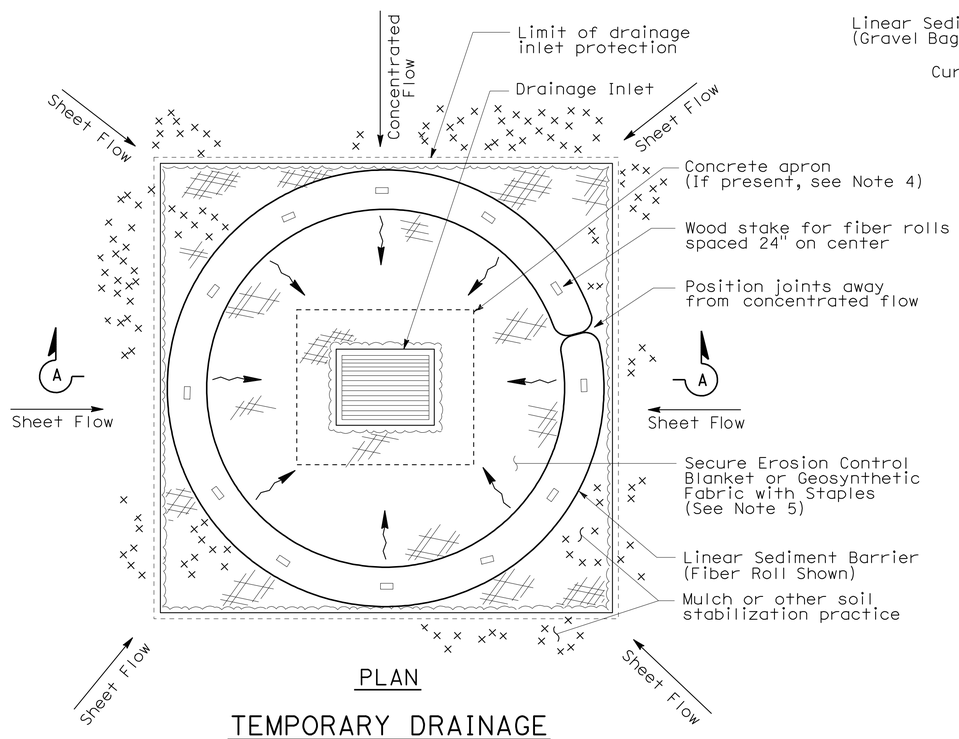

PLAN

TEMPORARY DRAINAGE INLET PROTECTION (TYPE 4A)

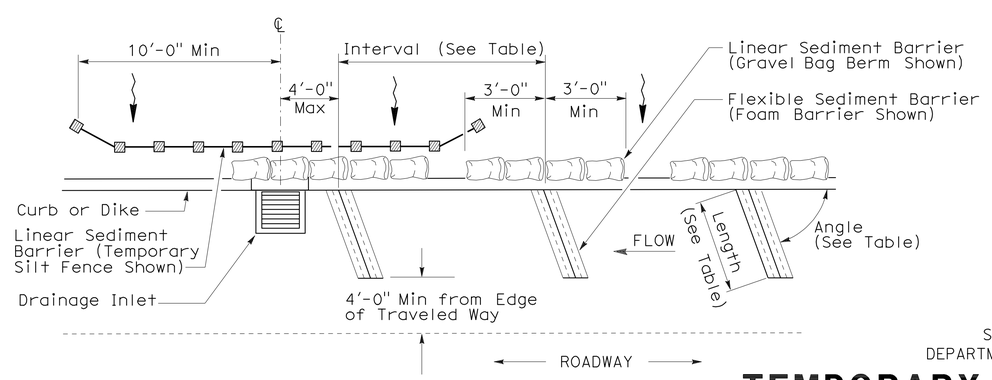

PLAN

TEMPORARY DRAINAGE INLET PROTECTION (TYPE 4B) FLEXIBLE SEDIMENT BARRIER

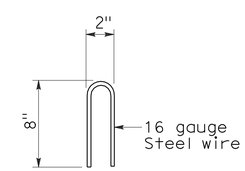

STAPLE DETAIL

STATE OF CALIFORNIA
DEPARTMENT OF TRANSPORTATION

TEMPORARY WATER POLLUTION CONTROL DETAILS (TEMPORARY DRAINAGE INLET PROTECTION)

NO SCALE

NSP T63 DATED AUGUST 15, 2008 SUPPLEMENTS THE STANDARD PLANS BOOK DATED MAY 2006.

NEW STANDARD PLAN NSP T63

2006 NEW STANDARD PLAN NSP T63

7-11-08

DIST	COUNTY	ROUTE	POST MILES TOTAL PROJECT	SHEET NO.	TOTAL SHEETS
04	SM	280	10.7/11.0	38	83

LICENSED LANDSCAPE ARCHITECT

August 15, 2008
PLANS APPROVAL DATE

LICENSED LANDSCAPE ARCHITECT
Robert B. Schott
Signature
11-04-08
Renewal Date
08-11-08
Date
STATE OF CALIFORNIA

The State of California or its officers or agents shall not be responsible for the accuracy or completeness of electronic copies of this plan sheet.

To accompany plans dated 1-18-11

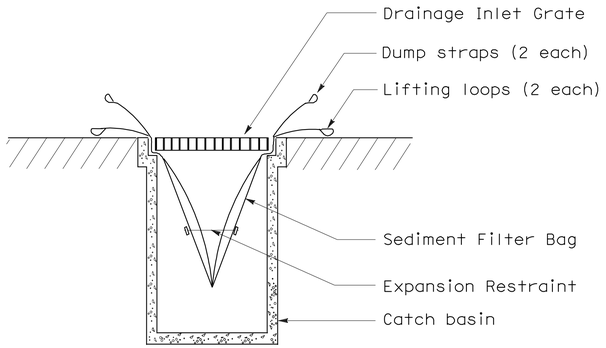

SECTION B-B

SEDIMENT FILTER BAG DETAIL

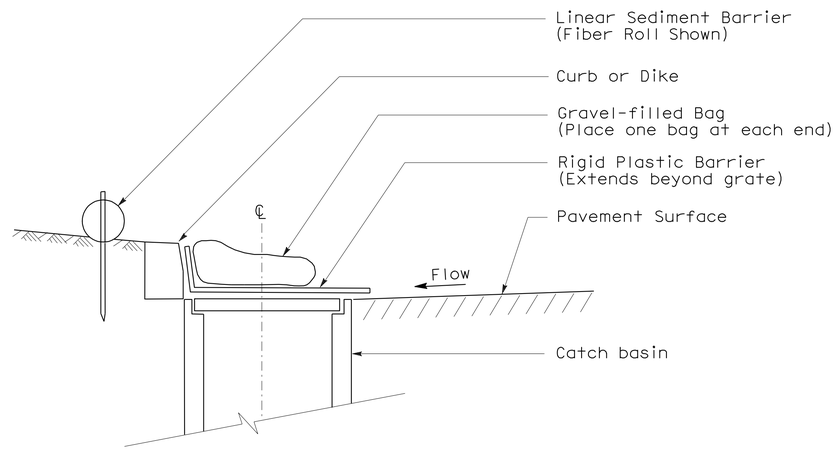

SECTION

TEMPORARY DRAINAGE INLET PROTECTION (TYPE 6A) (CATCH BASIN WITH GRATE)

NOTES:

1. See Standard Plan T51 for Temporary Silt Fence.
2. Dimensions may vary to fit field conditions.

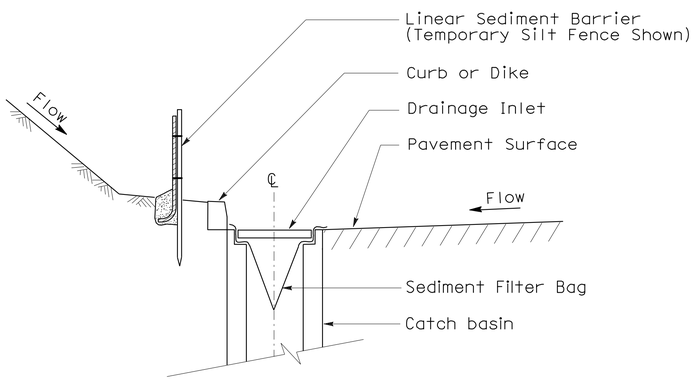

SECTION A-A

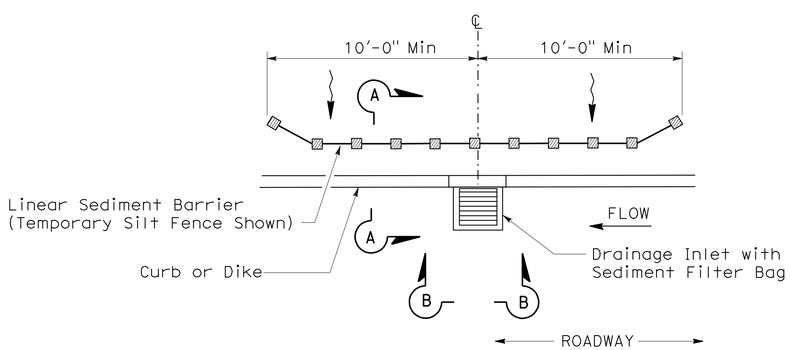

PLAN

TEMPORARY DRAINAGE INLET PROTECTION (TYPE 5) (SEDIMENT FILTER BAG)

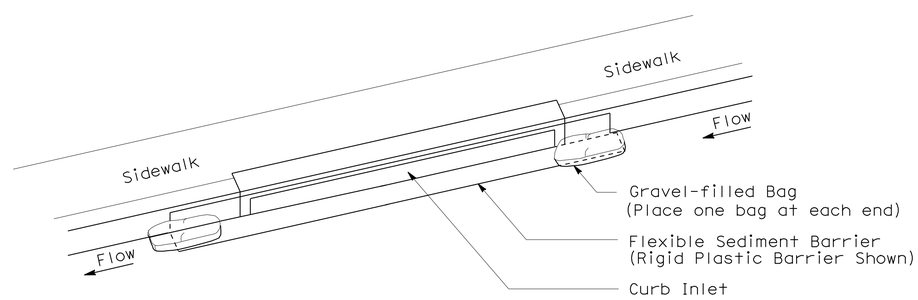

PERSPECTIVE

TEMPORARY DRAINAGE INLET PROTECTION (TYPE 6B) (CURB INLET WITHOUT GRATE)

STATE OF CALIFORNIA
DEPARTMENT OF TRANSPORTATION

TEMPORARY WATER POLLUTION CONTROL DETAILS (TEMPORARY DRAINAGE INLET PROTECTION)

NO SCALE

NSP T64 DATED AUGUST 15, 2008 SUPPLEMENTS
THE STANDARD PLANS BOOK DATED MAY 2006.

NEW STANDARD PLAN NSP T64

2006 NEW STANDARD PLAN NSP T64

7-11-08

DIST	COUNTY	ROUTE	POST MILES TOTAL PROJECT	SHEET NO.	TOTAL SHEETS
04	SM	280	10.7/11.0	39	83

LICENSED LANDSCAPE ARCHITECT

April 3, 2009
PLANS APPROVAL DATE

The State of California or its officers or agents shall not be responsible for the accuracy or completeness of electronic copies of this plan sheet.

LICENSED LANDSCAPE ARCHITECT
Robert B. Schott 3025
Signature
11-30-10
Renewal Date
2-25-09
Date
STATE OF CALIFORNIA

To accompany plans dated 1-18-11

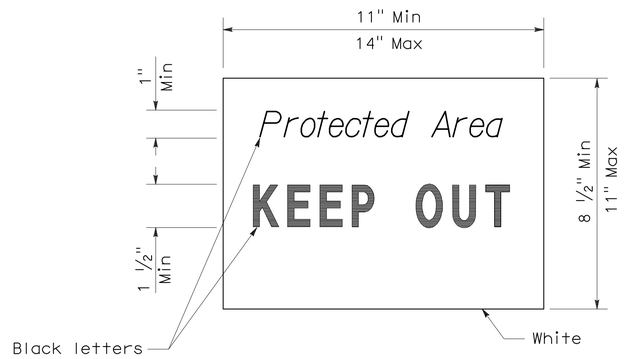

SIGN DETAIL

NOTE:

1. Temporary silt fence and temporary straw bale barrier shown for reference purposes only.

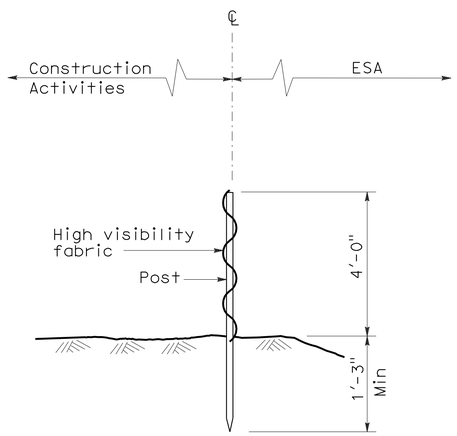

SECTION
TEMPORARY FENCE (TYPE ESA)

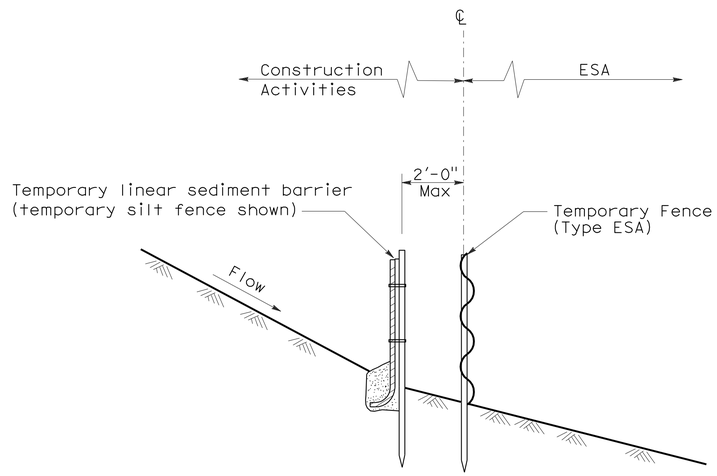

SECTION
PLACEMENT DETAIL
FOR TEMPORARY LINEAR SEDIMENT BARRIER
USED WITH TEMPORARY
FENCE (TYPE ESA)
(See Note 1)

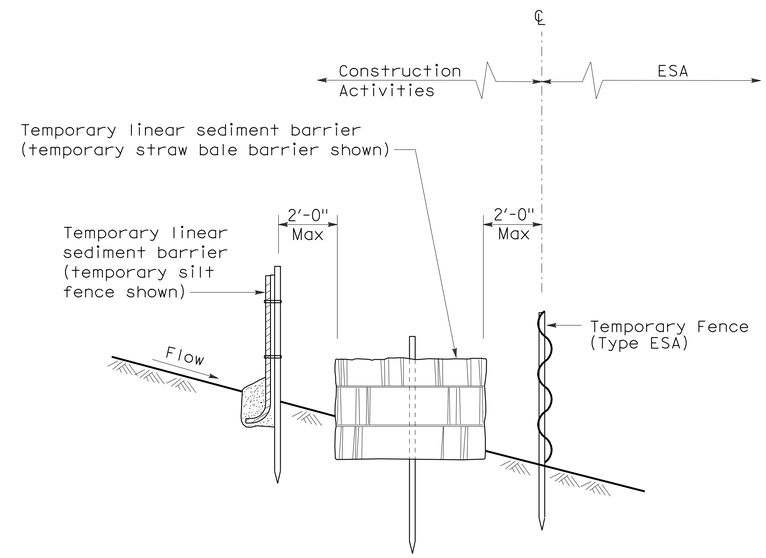

SECTION
PLACEMENT DETAIL
FOR TEMPORARY SILT FENCE
AND TEMPORARY STRAW BALE BARRIER
USED WITH TEMPORARY FENCE (TYPE ESA)
(See Note 1)

STATE OF CALIFORNIA
DEPARTMENT OF TRANSPORTATION

TEMPORARY WATER POLLUTION CONTROL DETAILS [TEMPORARY FENCE (TYPE ESA)]

NO SCALE

NSP T65 DATED APRIL 3, 2009 SUPPLEMENTS
THE STANDARD PLANS BOOK DATED MAY 2006.

NEW STANDARD PLAN NSP T65

2006 NEW STANDARD PLAN NSP T65

DIST	COUNTY	ROUTE	POST MILES TOTAL PROJECT	SHEET NO.	TOTAL SHEETS
04	SM	280	10.7/11.0	40	83

REGISTERED ELECTRICAL ENGINEER

October 5, 2007
PLANS APPROVAL DATE

REGISTERED PROFESSIONAL ENGINEER
Jeffery G. McRae
No. E14512
Exp. 6-30-08
ELECTRICAL
STATE OF CALIFORNIA

The State of California or its officers or agents shall not be responsible for the accuracy or completeness of electronic copies of this plan sheet.

To accompany plans dated 1-18-11

ELECTROLIERS

STANDARD TYPES
15, 15D
15 STRUCTURE
21, 21D STRUCTURE
30
31
32
35
36-20A

High mast light pole

Double Arm lighting standard

Existing electrolier

Electrolier foundation (Future installation)

NOTES:

1. Luminaires shall be 310 W HPS when installed on Type 21, 21D, 30, 31, 32, 35 and 36-20A Standards, unless otherwise specified. Luminaires shall be 200 W HPS when installed on other type standards or poles, unless otherwise specified.
2. Luminaires shall be the cutoff type, ANSI Type Ⅲ medium cutoff lighting distribution, unless otherwise specified.
3. Variations noted adjacent to symbol on project plans.

Electrolier (see project notes or project plans)

Luminaire on wood pole

STANDARD NOTES:

- AB Abandon. If applied to conduit, remove conductors.
- BC Install pull box in existing conduit run.
- BP Pedestrian barricade, type as indicated on plan.
- CB Install conduit into existing pull box.
- CC Connect new and existing conduit. Remove existing conductors and install conductors as indicated.
- CF Conduit to remain for future use. Remove conductors. Install pull wire or rope.
- DH Detector handhole.
- FA Foundation to be abandoned.
- IS Install sign on signal mast arm.
- NS No slip base on standard.
- PEC Photoelectric control.
- PEU Photoelectric unit.
- RC Equipment or material to be removed and become the property of the Contractor.
- RE Remove electrolier, fuses and ballast. Tape ends of conductors.
- RL Relocate equipment.
- RR Remove and reuse equipment.
- RS Remove and salvage equipment.
- SC Splice new to existing conductors.
- SD Service disconnect.
- SF Standard to remain for future use. Remove luminaire, pole conductors, fuses and ballast.
- TSP Telephone service point.

ABBREVIATIONS AND EQUIPMENT DESIGNATIONS

PROPOSED	EXISTING	
BBS	bbs	Battery backup system
BC	bc	Bolt circle
C	C	Conduit
CCTV	cctv	Closed circuit television
CKT	ckt	Circuit
CMS	cms	Changeable message sign
DLC	dlc	Loop detector lead-in cable
EMS	ems	Extinguishable message sign
EVC	evc	Emergency vehicle cable
EVD	evd	Emergency vehicle detector
FB	fb	Flashing beacon
FBCA	fbca	Flashing beacon control assembly
FBS	fbs	Flashing beacon with slip base
FO	fo	Fiber optic
G	G	Ground (Equipment Grounding Conductor)
GFCI	GFCI	Ground fault circuit interrupt
HAR	har	Highway advisory radio
HEX	hex	Hexagonal
HPS	hps	High pressure sodium
IISNS	iisns	Internally illuminated street name sign
ISL	isl	Induction sign lighting
LED	led	Light emitting diode
LMA	lma	Luminaire mast arm
LPS	lps	Low pressure sodium
LTG	ltg	Lighting
LUM	lum	Luminaire
MAT	mat	Mast arm mounting vehicle signal faces, top attachment
MAS	mas	Mast arm mounting vehicle signal faces, side attachment
MAS-4A MAS-4B MAS-4C	mas-4A mas-4B mas-4C	Mast arm mounting vehicle signal faces, side attachment - 4 signal section
MAS-5A MAS-5B	mas-5A mas-5B	Mast arm mounting vehicle signal faces, side attachment - 5 signal section
MC	mc	Mercury contactor
M/M	m/m	Multiple to multiple transformer
MT	mt	Conduit with pull wire or rope only
MTG	mtg	Mounting
	mv	Mercury vapor lighting fixture
N	N	Neutral (Grounded Conductor)
NC	NC	Normally closed
NO	NO	Normally open
PB	pb	Pull box
PEC	pec	Photoelectric control (Type Ⅰ, Ⅱ, Ⅲ, Ⅳ or Ⅴ as shown)
PED	ped	Pedestrian
PEU	peu	Photoelectric unit
PPB	ppb	Pedestrian push button
RL		Relocated equipment
RM	rm	Ramp metering
SB	sb	Slip base
SIC	sic	Signal interconnect cable
SIG	sig	Signal
SMA	sma	Signal mast arm
SNS	sns	Street name sign
SP	sp	Service point
TDC	tdc	Telephone demarcation cabinet
TMS	tms	Traffic monitoring station
TOS	tos	Traffic Operations System
VEH	veh	Vehicle
XFMR	xfmr	Transformer
COMM	comm	Communication
RWIS	rwis	Roadway weather information system

SOFFIT AND WALL MOUNTED LUMINAIRES

Pendant, 70 W HPS unless otherwise specified.

Flush, 70 W HPS unless otherwise specified.

Wall surface, 70 W HPS unless otherwise specified.

Existing soffit or wall luminaire to remain unmodified.

Existing soffit or wall luminaire to be modified as specified.

NOTE:

Arrow indicates "street side" of luminaire.

STATE OF CALIFORNIA
DEPARTMENT OF TRANSPORTATION

ELECTRICAL SYSTEMS (SYMBOLS AND ABBREVIATIONS)

NO SCALE

RSP ES-1A DATED OCTOBER 5, 2007 SUPERSEDES STANDARD PLAN ES-1A
DATED MAY 1, 2006 - PAGE 400 OF THE STANDARD PLANS BOOK DATED MAY 2006.

REVISED STANDARD PLAN RSP ES-1A

2006 REVISED STANDARD PLAN RSP ES-1A

DIST	COUNTY	ROUTE	POST MILES TOTAL PROJECT	SHEET NO.	TOTAL SHEETS
04	SM	280	10.7/11.0	41	83

REGISTERED ELECTRICAL ENGINEER

October 5, 2007
PLANS APPROVAL DATE

REGISTERED PROFESSIONAL ENGINEER
Jeffery G. McRae
No. E14512
Exp. 6-30-08
ELECTRICAL
STATE OF CALIFORNIA

The State of California or its officers or agents shall not be responsible for the accuracy or completeness of electronic copies of this plan sheet.

To accompany plans dated 1-18-11

CONDUIT

PROPOSED	EXISTING	
		Lighting Conduit, unless otherwise indicated or noted
		Traffic signal conduit
C	c	Communication conduit
T	t	Telephone conduit
F	f	Fire alarm conduit
FO	fo	Fiber optic conduit
		Conduit termination (RSP ES-9A C)
R	r	Conduit riser in/on structure or service pole

SERVICE EQUIPMENT

PROPOSED	EXISTING	
OH	oh	Overhead lines
U	U	Wood pole "U" indicates utility owned
		Pole guy with anchor
		Utility transformer - ground mounted
III		Service equipment enclosure type
		Service equipment enclosure door indicates front of enclosure
T	t	Telephone demarcation cabinet

POLE-MOUNTED SERVICE DESIGNATION

Type of installation

TYPE H SERVICE - 28'-10" ← Pole height above grade

ILLUMINATED OVERHEAD SIGN

PROPOSED	EXISTING	
		Overhead sign - Single post
		Overhead sign - Two post
		Overhead sign - Mounted on structure
		Overhead sign with electrolier

SIGNAL EQUIPMENT

PROPOSED	EXISTING	
		Pedestrian signal face
		Pedestrian push button post
		Pedestrian barricade
		Vehicle signal face (with backplate, 3-Section: red, yellow and green)
		Vehicle signal face with angle visors
PV	PV	Modifications of basic symbols: "L" indicates all non-arrow sections louvered "LG" indicates louvered green section only "PV" indicates 12" programmed visibility sections "8" indicates all 8" sections (only when specified)
		Type 15TS and Vehicle signal face
		Vehicle signal face with red, yellow and green left arrow sections
		Vehicle signal face with red and yellow sections and up green arrow
		Vehicle signal face (5 Section) with red, yellow and green sections and yellow and green right arrows
		Type 1 Standard and attached vehicle signal faces
		Standard with signal mast arm only and attached vehicle signal faces and internally illuminated street name sign
		Type 33 Standard, Left-turn vehicle signal face and sign
		Standard with luminaire and signal mast arms and attached vehicle signal faces
		Cantilever flashing beacon Type 9 Frame, with a sign unless otherwise specified or indicated
		Type 15-FBS Standard with two vehicle signal face sections with lens, backplate and visor with a sign
R	Y	Flashing beacon. One vehicle signal face section with lens, backplate and visor. "R" indicates red indication, "Y" indicates yellow indication
		Controller assembly. Door indicates front of cabinet

SIGNAL EQUIPMENT Cont

PROPOSED	EXISTING	
		Guard post
		Type 1 Standard with "Meter On" sign
		Emergency Vehicle detector

NOTES:

1. All signal sections shall be 12" unless shown otherwise.
2. Signal heads shall be provided with backplates unless shown otherwise.
3. Signal indication shall be LED.

STATE OF CALIFORNIA
DEPARTMENT OF TRANSPORTATION

ELECTRICAL SYSTEMS (SYMBOLS AND ABBREVIATIONS)

NO SCALE

RSP ES-1B DATED OCTOBER 5, 2007 SUPERCEDES STANDARD PLAN ES-1B DATED MAY 1, 2006 - PAGE 401 OF THE STANDARD PLANS BOOK DATED MAY 2006.

REVISED STANDARD PLAN RSP ES-1B

2006 REVISED STANDARD PLAN RSP ES-1B

DIST	COUNTY	ROUTE	POST MILES TOTAL PROJECT	SHEET NO.	TOTAL SHEETS
04	SM	280	10.7/11.0	42	83

REGISTERED ELECTRICAL ENGINEER

October 5, 2007
PLANS APPROVAL DATE

REGISTERED PROFESSIONAL ENGINEER Jeffery G. McRae No. E14512 Exp. 6-30-08 ELECTRICAL STATE OF CALIFORNIA

The State of California or its officers or agents shall not be responsible for the accuracy or completeness of electronic copies of this plan sheet.

To accompany plans dated 1-18-11

2006 REVISED STANDARD PLAN RSP ES-1C

EQUIPMENT IDENTIFICATION

ILLUMINATED SIGN IDENTIFICATION NUMBER:

Sign No. 12345 — Sign number - Place on post or structure

10 ISL SCI 1.0

- 1.0 — Transformer rating (kVA)
- SCI — Lighting control type
- ISL — Number and type of fixtures

Do NOT place on standard or structure

ELECTROLIER OR EQUIPMENT IDENTIFICATION NUMBER:

12345 - 15'-0"

- 15'-0" — Mast arm length, if shown. Do not place on standard or structure.
- 12345 — Equipment number - Place on standard or structure. Existing equipment numbers are shown in parenthesis

CONDUIT AND CONDUCTOR IDENTIFICATION:

1½"C, 2#10, 15#14, 2 DLC

- 2#10, 15#14, 2 DLC — Number and size of conductors and cables
- 1½"C — Size of conduit in inches

Ø1, Ø2, Ø2P, etc.	Traffic phase identification for signal faces, detectors and phase diagrams
1 2 3	Project note numbers
A B C	Equipment description, installation or item numbers
1 2 3	Conduit run numbers

SIGNAL AND LIGHTING STANDARD (TYPICAL DESIGNATION):

19A - 3 - 100

- 100 — Wind velocity = 100 mph
- 3 — Case 3 arm loading
- 19A — Standard type
- Standard Plan sheet number
- Detail number or letter

WIRING DIAGRAM LEGEND

P	Pole
CB	Circuit breaker
A	Ampere
V	Volt
M	Metered
UM	Unmetered
NB	Neutral bus
GB	Ground bus
G	Equipment grounding conductor
N	Grounded conductor (Neutral)

- External conductor
- Conductor or bus
- Tie point
- Contactor coil
- Contactor, Contact NO
- Terminal blocks
- Contactor, Contact NC
- Enclosure bond
- Grounding electrode
- Circuit breaker
- Receptacle

PULL BOXES

PROPOSED EXISTING

Pull box-No. 5 unless otherwise indicated or noted.

3 — 9A(21)

Pull box-Additional designations or descriptions

- 3 = No. 3½ pull box
- 5 = No. 5 pull box
- 6 = No. 6 pull box
- 7 = No. 7 (Ceiling pull box)
- 8 = No. 8 (Pendant soffit pull box)
- 9 = No. 9 pull box
- 9A = No. 9A pull box

- (C) = Communications pull box
- (E) = Pull box with extension
- (S) = Sprinkler control pull box
- (21) = Anchor bolts and conduit for future installation of Type 21 Standard
- (T) = Traffic pull box

MISCELLANEOUS EQUIPMENT

PROPOSED	EXISTING	
CMS	cms	Changeable message sign
		Closed circuit television camera
		Highway advisory radio pole and antenna
EMS	ems	Extinguishable message sign
M V	m v	Detection device M = Microwave sensor V = Video image sensor

VEHICLE DETECTORS

5 J 9 U

- Vehicle detector designation
- U = Upper
  L = Lower
- Slot number in input file
- Input file (I or J)
- Phase

PROPOSED	EXISTING	
		Type A detector loop. Outline of sawcut shown.
		Type B detector loop. Outline of sawcut shown.
		Type C detector loop. Outline of sawcut shown.
		Type D detector loop. Outline of sawcut shown.
		Type E detector loop. Outline of sawcut shown.
		Type Q detector loop. Outline of sawcut shown.
		Magnetic detector
DH	dh	Detector handhole
		Microwave or video detection zone

STATE OF CALIFORNIA
DEPARTMENT OF TRANSPORTATION

ELECTRICAL SYSTEMS (SYMBOLS AND ABBREVIATIONS)

NO SCALE

RSP ES-1C DATED OCTOBER 5, 2007 SUPERCEDES STANDARD PLAN ES-1C DATED MAY 1, 2006 - PAGE 402 OF THE STANDARD PLANS BOOK DATED MAY 2006.

REVISED STANDARD PLAN RSP ES-1C

DIST	COUNTY	ROUTE	POST MILES TOTAL PROJECT	SHEET No	TOTAL SHEETS
04	SM	280	10.7/11.0	43	83

REGISTERED CIVIL ENGINEER 12-15-10 DATE

1-18-11
PLANS APPROVAL DATE

REGISTERED PROFESSIONAL ENGINEER PHILIP E. LUTZ No. C55839 Exp. 12/31/12 CIVIL STATE OF CALIFORNIA

The State of California or its officers or agents shall not be responsible for the accuracy or completeness of electronic copies of this plan sheet.

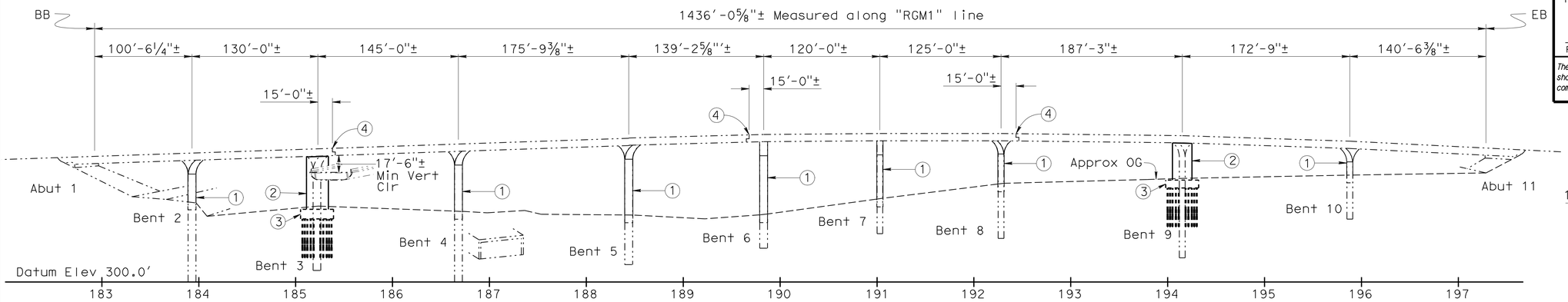

DEVELOPED ELEVATION

1"=60'

RETROFIT LEGEND:

1. Column Retrofit (Steel Casing)
2. Column Retrofit
3. Install Pile Cap and Micropiles
4. Install Hinge Seat Extenders
5. Temporary Deck Access Openings
6. Temporary Deck Access Openings (Optional)
7. Stage 1 Traffic
8. Stage 2 Traffic

Denotes new construction

Denotes existing structure

QUANTITIES

ACCESS OPENING, DECK	12	EA
BRIDGE REMOVAL (PORTION), LOCATION B	LUMP	SUM
STRUCTURE EXCAVATION (HAZARDOUS WASTE)	1,040	CY
STRUCTURE BACKFILL (BRIDGE)	610	CY
MICROPILE	167	EA
STRUCTURAL CONCRETE, BRIDGE FOOTING	827	CY
STRUCTURAL CONCRETE, BRIDGE	330	CY
DIAPHRAGM BOLSTER	12	EA
DRILL AND BOND DOWEL	220	LF
CLOSE ACCESS, DECK	12	EA
CORE CONCRETE (7")	220	LF
BAR REINFORCING STEEL (BRIDGE)	456,000	LB
HEADED BAR REINFORCEMENT	1,472	EA
ASPHALT MEMBRANE WATERPROOFING	1,182	SQFT
COLUMN CASING	261,000	LB
MISCELLANEOUS METAL (SEAT EXTENDER-PIPE)	10,880	LB

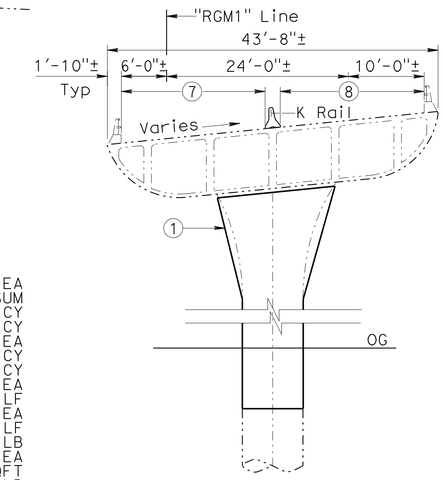

BENTS 2, 4 THRU 8 AND 10

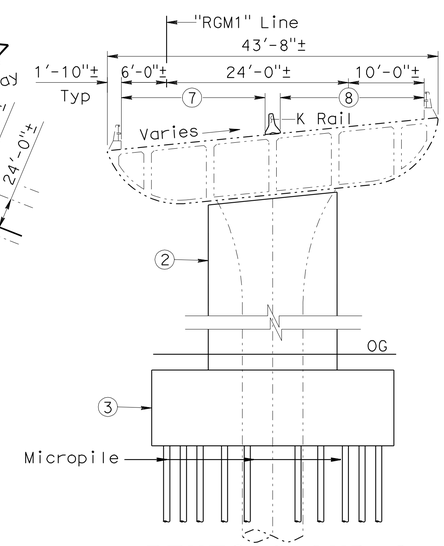

BENTS 3 AND 9

TYPICAL SECTIONS

1"=10'

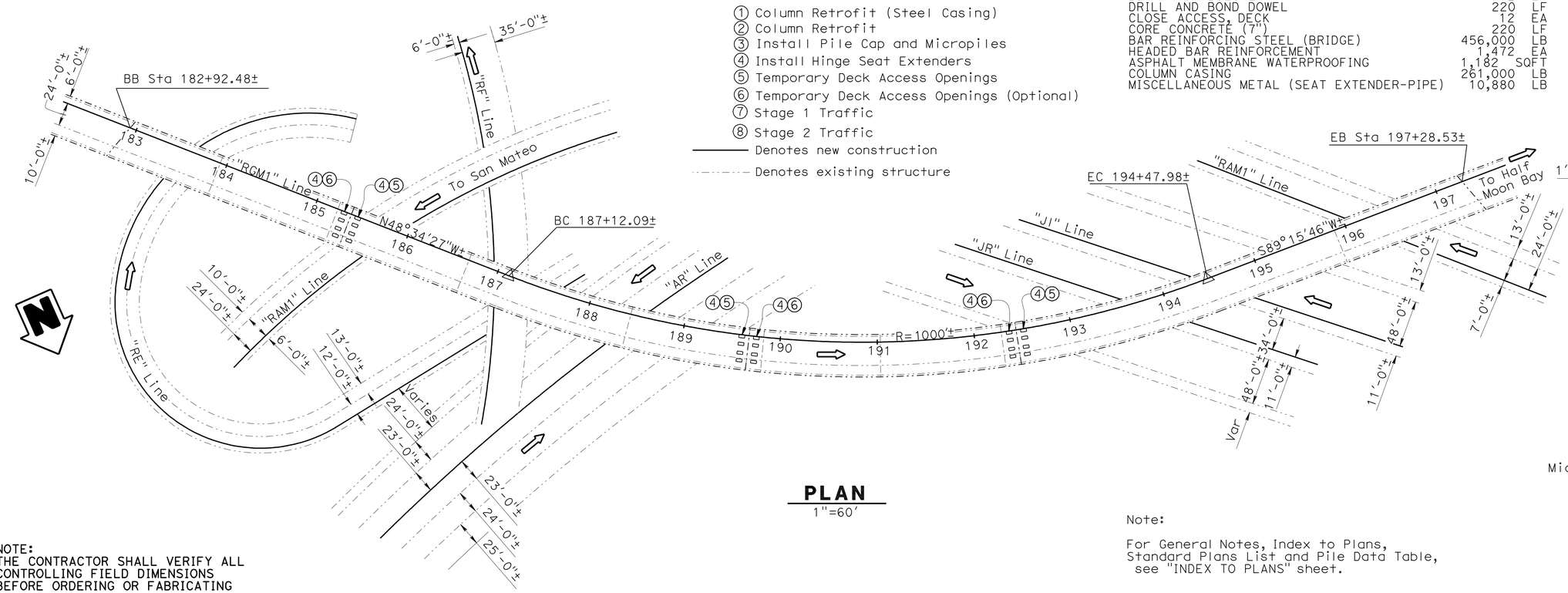

PLAN

1"=60'

Note:

For General Notes, Index to Plans, Standard Plans List and Pile Data Table, see "INDEX TO PLANS" sheet.

NOTE:
THE CONTRACTOR SHALL VERIFY ALL CONTROLLING FIELD DIMENSIONS BEFORE ORDERING OR FABRICATING ANY MATERIAL.

Gordon Danke
DESIGN ENGINEER

	BY	CHECKED			
DESIGN	David Small	P. Lutz	LOAD & RESISTANCE FACTOR DESIGN	LIVE LOADING: HL93 W/"LOW-BOY"; PERMIT DESIGN VEHICLE	
DETAILS	D. Elliott/T. Fairall	P. Lutz	LAYOUT	David Small	P. Lutz
QUANTITIES	David Small	P. Lutz	SPECIFICATIONS	Erwin Rufino	PLANS AND SPECS COMPARED Erwin Rufino

STATE OF CALIFORNIA
DEPARTMENT OF TRANSPORTATION

DIVISION OF ENGINEERING SERVICES
STRUCTURE DESIGN
DESIGN BRANCH 9

BRIDGE NO. 35-0244G
POST MILE 10.8

N280/W92 CONNECTOR OC (RETROFIT)

GENERAL PLAN

STRUCTURES DESIGN GENERAL PLAN SHEET (ENGLISH) (REV. 10/25/05)

ORIGINAL SCALE IN INCHES FOR REDUCED PLANS 0 1 2 3

CU 04245
EA 1A7701

DISREGARD PRINTS BEARING EARLIER REVISION DATES

REVISION DATES: 09-11-08 02-23-09 03-26-09 4-21-09 7-16-09 10-21-10 12-10-10

SHEET 1 OF 21

FILE => 35-0244g-a-gp01.dgn

STRUCTURES DESIGN GENERAL PLAN SHEET (ENGLISH) (REV.07-24-06)

USERNAME => trmikes1 DATE PLOTTED => 20-JAN-2011 TIME PLOTTED => 12:12

DIST	COUNTY	ROUTE	POST MILES TOTAL PROJECT	SHEET No	TOTAL SHEETS
04	SM	280	10.7/11.0	44	83

REGISTERED CIVIL ENGINEER 12-15-10 DATE

1-18-11
PLANS APPROVAL DATE

REGISTERED PROFESSIONAL ENGINEER PHILIIP E. LUTZ No. C55839 Exp. 12/31/12 CIVIL STATE OF CALIFORNIA

The State of California or its officers or agents shall not be responsible for the accuracy or completeness of electronic copies of this plan sheet.

GENERAL NOTES
LOAD FACTOR DESIGN

DESIGN:
Bridge Design Specifications ('96 AASHTO w/Revisions by Caltrans)

SEISMIC DESIGN:
Caltrans Seismic Design Criteria (SDC), Version 1.4 dated June 2006

DEAD LOAD:
Includes 35 psf for future wearing surface.

SEISMIC LOADING:
See "SITE SPECIFIC ACCELERATION RESPONSE SPECTRA CURVE"

CONCRETE:
fy = 60 ksi
f'c = 3.6 ksi
n = 8

STANDARD PLANS DATED MAY 2006

A10A ACRONYMS AND ABBREVIATIONS (SHEET 1 OF 2)
A10B ACRONYMS AND ABBREVIATIONS (SHEET 2 OF 2)
A10C SYMBOLS (SHEET 1 OF 2)
A10D SYMBOLS (SHEET 2 OF 2)
A62C LIMITS OF PAYMENT FOR EXCAVATION AND BACKFILL BRIDGE

STANDARD PLAN SHEET No.
DETAIL No.

PILE DATA TABLE

Location	Pile Type	Cutoff Elevation (ft)	Design load (kips) Extreme Event Comp. (Kip)	Design load (kips) Extreme Event Tension (Kip)	Design Tip Elevation *, (ft)	Specified Tip Elevation *, (ft)
Bent 3	Micropile	376.5	525	368	302	302
Bent 9	Micropile	401.5	532	368	327	327

* The tip elevations controlled by tension are shown for estimating purposes only. The bond zone length and plunge length to be determined by Contractor.

NOTE:

1. For "PERFORMANCE TEST PILE DATA", See "PERFORMANCE TEST PILE DATA TABLE".

INDEX TO PLANS

1 GENERAL PLAN
2 INDEX TO PLANS
3 FOUNDATION PLAN No. 1
4 FOUNDATION PLAN No. 2
5 FOUNDATION PLAN No. 3
6 BENT DETAILS No. 1
7 BENT DETAILS No. 2
8 BENT DETAILS No. 3
9 MICROPILE DETAILS
10 COLUMN DETAILS
11 SEAT EXTENDER DETAILS
12 LOG OF TEST BORINGS 1 OF 10
13 LOG OF TEST BORINGS 2 OF 10
14 LOG OF TEST BORINGS 3 OF 10
15 LOG OF TEST BORINGS 4 OF 10
16 LOG OF TEST BORINGS 5 OF 10
17 LOG OF TEST BORINGS 6 OF 10
18 LOG OF TEST BORINGS 7 OF 10
19 LOG OF TEST BORINGS 8 OF 10
20 LOG OF TEST BORINGS 9 OF 10
21 LOG OF TEST BORINGS 10 OF 10

PERFORMANCE TEST PILE DATA TABLE

Location	Pile Type	Cut-Off Elevation (ft)	Nomianl Resistance Comp. (Kip)	Nomianl Resistance Tension (Kip)	Design Tip Elevation *, ** (ft)	Specified Tip Elevation *, ** (ft)
25.5' Rt "RAM1" Line	Test Micropile	378	525	368	311	311
Sta 184+35	Anchor Micropile	378	525	368	311	311
46.0' Lt "RAM1" Line	Test Micropile	382	430	301	312	312
Sta 189+66	Anchor Micropile	382	430	301	312	312
28.5' Lt "RGM1" Line	Test Micropile	411	532	368	336	336
Sta 193+74	Anchor Micropile	411	532	368	336	336

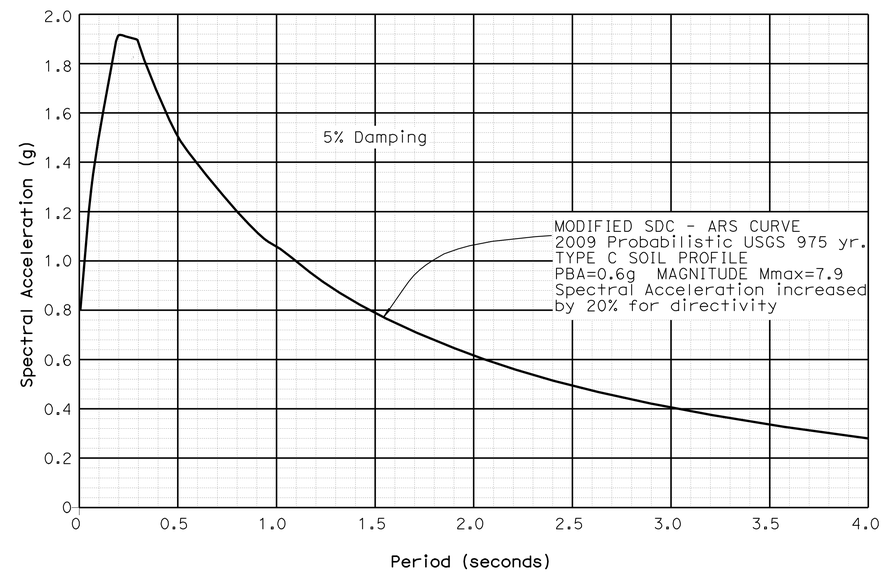

SITE SPECIFIC ACCELERATION RESPONSE SPECTRA CURVE

NO SCALE

LEGEND:

Structural Concrete, Bridge (Substructure) (f'c = 4000 psi)
Structural Concrete, Bridge Footing (f'c = 4000 psi)

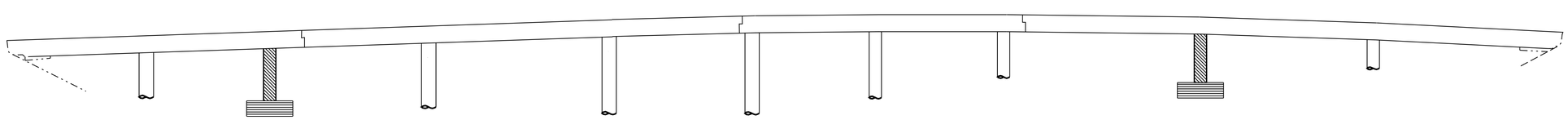

CONCRETE STRENGTH AND TYPE LIMITS

NO SCALE

NOTE:
THE CONTRACTOR SHALL VERIFY ALL CONTROLLING FIELD DIMENSIONS BEFORE ORDERING OR FABRICATING ANY MATERIAL.

	BY	CHECKED
DESIGN	David Small	P. Lutz
DETAILS	Pete Carreon	P. Lutz
QUANTITIES	David Small	P. Lutz

STATE OF CALIFORNIA
DEPARTMENT OF TRANSPORTATION

DIVISION OF ENGINEERING SERVICES
STRUCTURE DESIGN
DESIGN BRANCH 9

BRIDGE NO. 35-0244G
POST MILE 10.8

N280/W92 CONNECTOR OC (RETROFIT)
INDEX TO PLANS

STRUCTURES DESIGN DETAIL SHEET (ENGLISH) (REV. 10/25/05)

ORIGINAL SCALE IN INCHES FOR REDUCED PLANS 0 1 2 3

CU 04245
EA 1A7701

DISREGARD PRINTS BEARING EARLIER REVISION DATES

REVISION DATES: 04-04-09 7-16-09 10-31-10 12-3-2010 12-9-10

SHEET 2 OF 21

FILE => 35-0244g-a-itp.dgn

USERNAME => trmikes1 DATE PLOTTED => 20-JAN-2011 TIME PLOTTED => 12:12

DIST	COUNTY	ROUTE	POST MILES TOTAL PROJECT	SHEET No	TOTAL SHEETS
04	SM	280	10.7/11.0	45	83

REGISTERED CIVIL ENGINEER — DATE 12-15-10

1-18-11
PLANS APPROVAL DATE

REGISTERED PROFESSIONAL ENGINEER — PHILIP E. LUTZ — No. C55839 — Exp. 12/31/12 — CIVIL — STATE OF CALIFORNIA

The State of California or its officers or agents shall not be responsible for the accuracy or completeness of electronic copies of this plan sheet.

CURVE DATA

No.	R	Δ	T	L
(A)	1000.00	42°9'47"	385.50	735.89
(B)	900.00	92°7'34"	934.03	1447.11

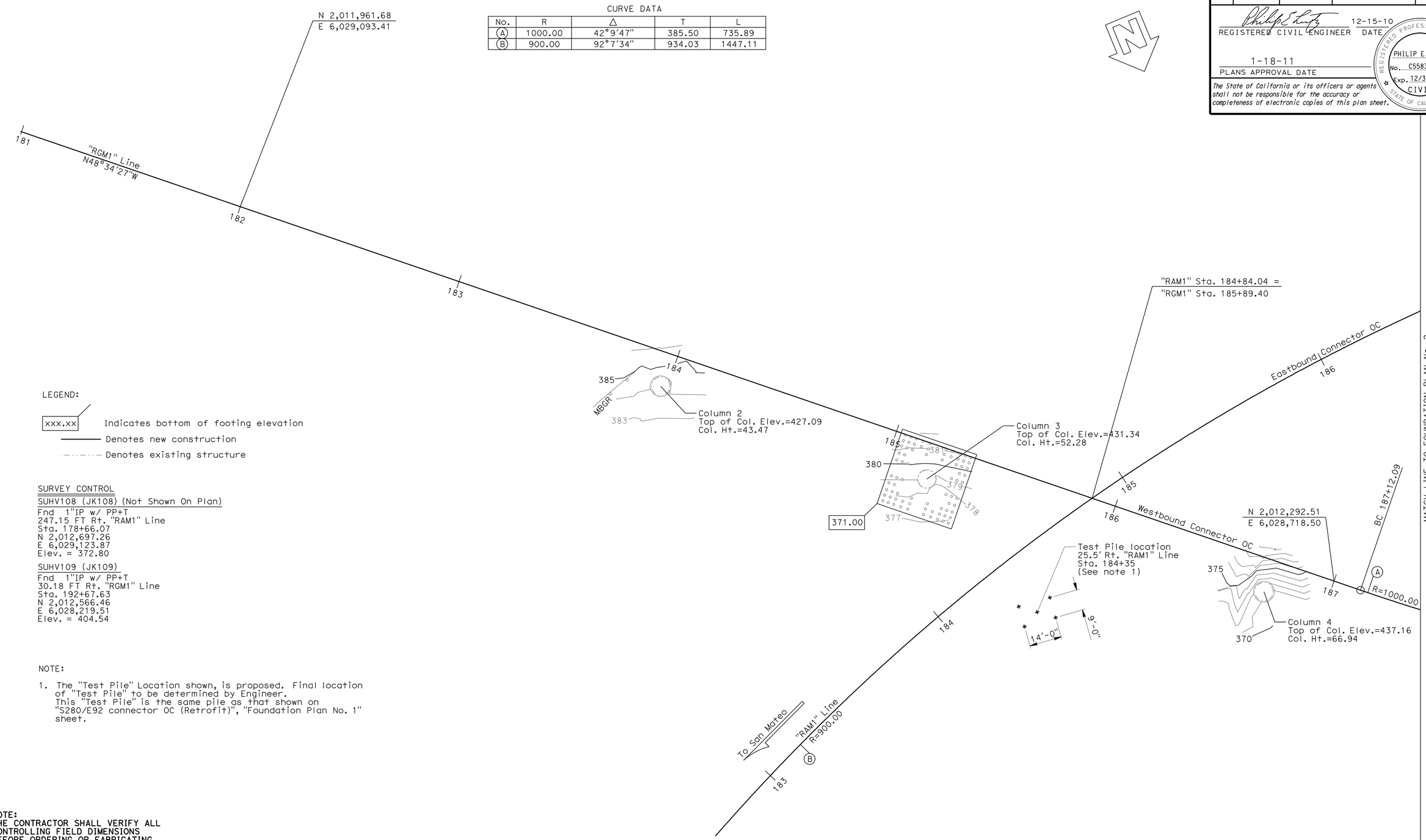

LEGEND:

xxx.xx — Indicates bottom of footing elevation

——— Denotes new construction

—·—·— Denotes existing structure

SURVEY CONTROL

SUHV108 (JK108) (Not Shown On Plan)

Fnd 1"IP w/ PP+T
247.15 FT Rt. "RAM1" Line
Sta. 178+66.07
N 2,012,697.26
E 6,029,123.87
Elev. = 372.80

SUHV109 (JK109)

Fnd 1"IP w/ PP+T
30.18 FT Rt. "RGM1" Line
Sta. 192+67.63
N 2,012,566.46
E 6,028,219.51
Elev. = 404.54

NOTE:

1. The "Test Pile" Location shown, is proposed. Final location of "Test Pile" to be determined by Engineer. This "Test Pile" is the same pile as that shown on "S280/E92 connector OC (Retrofit)", "Foundation Plan No. 1" sheet.

NOTE:
THE CONTRACTOR SHALL VERIFY ALL CONTROLLING FIELD DIMENSIONS BEFORE ORDERING OR FABRICATING ANY MATERIAL.

PRELIMINARY INVESTIGATION SECTION

SCALE	VERT.DATUM NAVD88	PHOTOGRAMMETRY AS OF: X			
1"=20'	HORZ.DATUM NAD83 (1991.35)	SURVEYED	BY Dist./ T.Gillett	CHECKED	BY T.Gillett 02/2009
ALIGNMENT TIES Dist. Traverse Sheet		DRAFTED	BY J.Martinez 02/2009	CHECKED	BY J.Pallares 02/2009

	BY	CHECKED
DESIGN	David Small	P. Lutz
DETAILS	Pete Carreon/DE	P. Lutz
QUANTITIES	David Small	P. Lutz

STATE OF CALIFORNIA
DEPARTMENT OF TRANSPORTATION

DIVISION OF ENGINEERING SERVICES
STRUCTURE DESIGN
DESIGN BRANCH 9

BRIDGE NO. 35-0244G
POST MILE 10.8

N280/W92 CONNECTOR OC (RETROFIT)
FOUNDATION PLAN No. 1

STRUCTURES FOUNDATION PLAN SHEET (ENGLISH) (REV. 10/25/05)

ORIGINAL SCALE IN INCHES FOR REDUCED PLANS 0 1 2 3

CU 04245
EA 1A7701

DISREGARD PRINTS BEARING EARLIER REVISION DATES

REVISION DATES: 2-25-09 4-16-09 9-9-10 10-4-10 10-21-10

SHEET 3 OF 21

FILE => 35-0244g-e-fp101.dgn

USERNAME => trmikest DATE PLOTTED => 20-JAN-2011 TIME PLOTTED => 12:12

DIST	COUNTY	ROUTE	POST MILES TOTAL PROJECT	SHEET No	TOTAL SHEETS
04	SM	280	10.7/11.0	46	83

REGISTERED CIVIL ENGINEER 12-15-10 DATE

1-18-11
PLANS APPROVAL DATE

REGISTERED PROFESSIONAL ENGINEER PHILIP E. LUTZ No. C55839 Exp. 12/31/12 CIVIL STATE OF CALIFORNIA

The State of California or its officers or agents shall not be responsible for the accuracy or completeness of electronic copies of this plan sheet.

CURVE DATA

No.	R	Δ	T	L
(A)	1000.00	42°9'47"	385.50	735.89
(B)	900.00	92°7'34"	934.03	1447.11

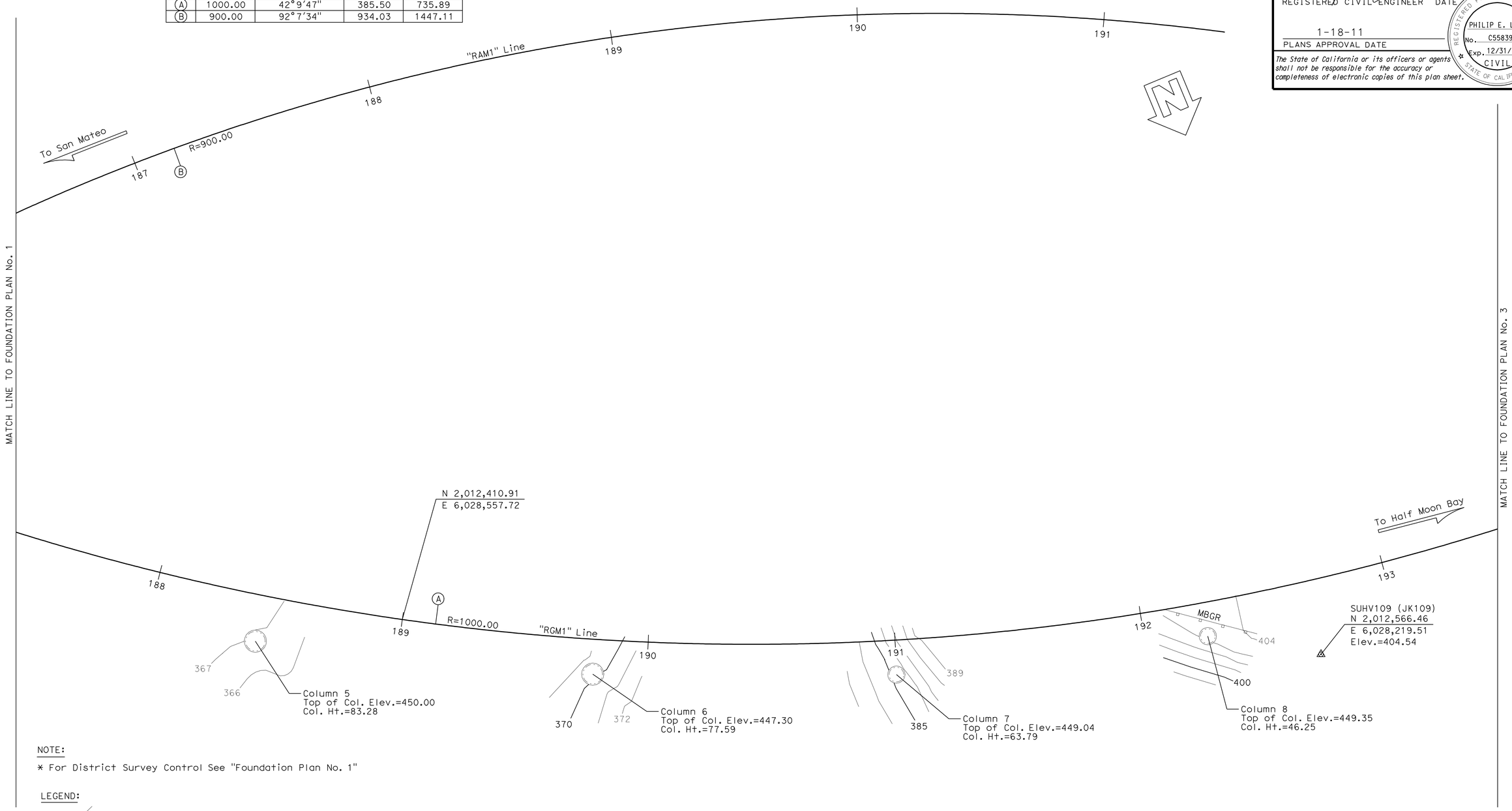

NOTE:

* For District Survey Control See "Foundation Plan No. 1"

LEGEND:

xxx.xx	Indicates bottom of footing elevation
———	Denotes new construction
—·—·—	Denotes existing structure

NOTE:
THE CONTRACTOR SHALL VERIFY ALL CONTROLLING FIELD DIMENSIONS BEFORE ORDERING OR FABRICATING ANY MATERIAL.

PRELIMINARY INVESTIGATION SECTION

SCALE 1"=20'	VERT.DATUM NAVD88	PHOTOGRAMMETRY AS OF: X			
HORZ.DATUM NAD83 (1991.35)	SURVEYED	BY Dist./ T.Gillett	CHECKED	BY T.Gillett 02/2009	
ALIGNMENT TIES Dist. Traverse Sheet	DRAFTED	BY J.Martinez 02/2009	CHECKED	BY J.Pallares 02/2009	

DESIGN	BY David Small	CHECKED P. Lutz
DETAILS	BY Pete Carreon	CHECKED P. Lutz
QUANTITIES	BY David Small	CHECKED P. Lutz

STATE OF CALIFORNIA
DEPARTMENT OF TRANSPORTATION

DIVISION OF ENGINEERING SERVICES
STRUCTURE DESIGN
DESIGN BRANCH 9

BRIDGE NO. 35-0244G
POST MILE 10.8

N280/W92 CONNECTOR OC (RETROFIT)
FOUNDATION PLAN No. 2

STRUCTURES FOUNDATION PLAN SHEET (ENGLISH) (REV. 10/25/05)

ORIGINAL SCALE IN INCHES FOR REDUCED PLANS 0 1 2 3

CU 04245
EA 1A7701

DISREGARD PRINTS BEARING EARLIER REVISION DATES

REVISION DATES: 2/25/09 4/16/09 10-21-10

SHEET 4 OF 21

FILE => 35-0244g-e-fp102.dgn

USERNAME => trmikesl DATE PLOTTED => 20-JAN-2011 TIME PLOTTED => 12:12

DIST	COUNTY	ROUTE	POST MILES TOTAL PROJECT	SHEET No	TOTAL SHEETS
04	SM	280	10.7/11.0	47	83

REGISTERED CIVIL ENGINEER 12-15-10 DATE

1-18-11
PLANS APPROVAL DATE

REGISTERED PROFESSIONAL ENGINEER
PHILIP E. LUTZ
No. C55839
Exp. 12/31/12
CIVIL
STATE OF CALIFORNIA

The State of California or its officers or agents shall not be responsible for the accuracy or completeness of electronic copies of this plan sheet.

CURVE DATA

No.	R	Δ	T	L
(A)	1000.00	42°9'47"	385.50	735.89
(B)	900.00	92°7'34"	934.03	1447.11

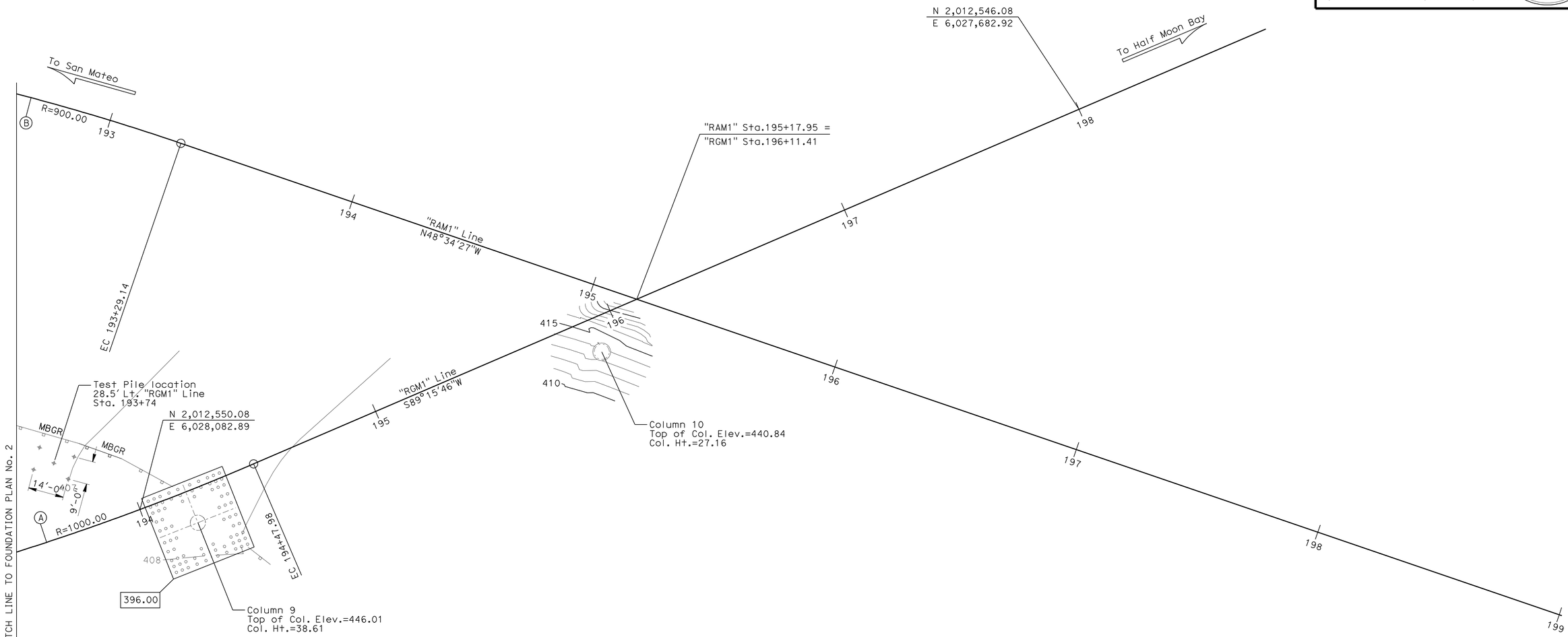

LEGEND:

xxx.xx	Indicates bottom of footing elevation
———	Denotes new construction
-·-·-·-	Denotes existing structure

NOTE:

1. For District Survey Contol See "Foundation Plan No. 1"
2. The "Test Pile" location shown, is proposed. Final location of "Test Pile" to be determined by the Engineer.

NOTE:
THE CONTRACTOR SHALL VERIFY ALL CONTROLLING FIELD DIMENSIONS BEFORE ORDERING OR FABRICATING ANY MATERIAL.

PRELIMINARY INVESTIGATION SECTION

SCALE	VERT.DATUM NAVD88	PHOTOGRAMMETRY AS OF: X			
1"=20'	HORZ.DATUM NAD83 (1991.35)	SURVEYED	BY Dist./ T.Gillett	CHECKED	BY T.Gillett 02/2009
ALIGNMENT TIES Dist. Traverse Sheet		DRAFTED	BY J.Martinez 02/2009	CHECKED	BY J.Pallares 02/2009

DESIGN	BY David Small	CHECKED P. Lutz
DETAILS	BY Pete Carreon/DE	CHECKED P. Lutz
QUANTITIES	BY David Small	CHECKED P. Lutz

STATE OF CALIFORNIA
DEPARTMENT OF TRANSPORTATION

DIVISION OF ENGINEERING SERVICES
STRUCTURE DESIGN
DESIGN BRANCH 9

BRIDGE NO. 35-0244G
POST MILE 10.8

N280/W92 CONNECTOR OC (RETROFIT)
FOUNDATION PLAN No.3

STRUCTURES FOUNDATION PLAN SHEET (ENGLISH) (REV. 10/25/05)

ORIGINAL SCALE IN INCHES FOR REDUCED PLANS 0 1 2 3

CU 04245
EA 1A7701

DISREGARD PRINTS BEARING EARLIER REVISION DATES

REVISION DATES: 2-25-09 4-16-09 9-9-10 10-4-10 10-21-10

SHEET 5 OF 21

FILE => 35-0244g-e-fp103.dgn

USERNAME => trmikes1 DATE PLOTTED => 20-JAN-2011 TIME PLOTTED => 12:13

DIST	COUNTY	ROUTE	POST MILES TOTAL PROJECT	SHEET No	TOTAL SHEETS
04	SM	280	10.7/11.0	48	83

REGISTERED CIVIL ENGINEER 12-15-10 DATE

1-18-11
PLANS APPROVAL DATE

REGISTERED PROFESSIONAL ENGINEER PHILIP E. LUTZ No. C55839 Exp. 12/31/12 CIVIL STATE OF CALIFORNIA

The State of California or its officers or agents shall not be responsible for the accuracy or completeness of electronic copies of this plan sheet.

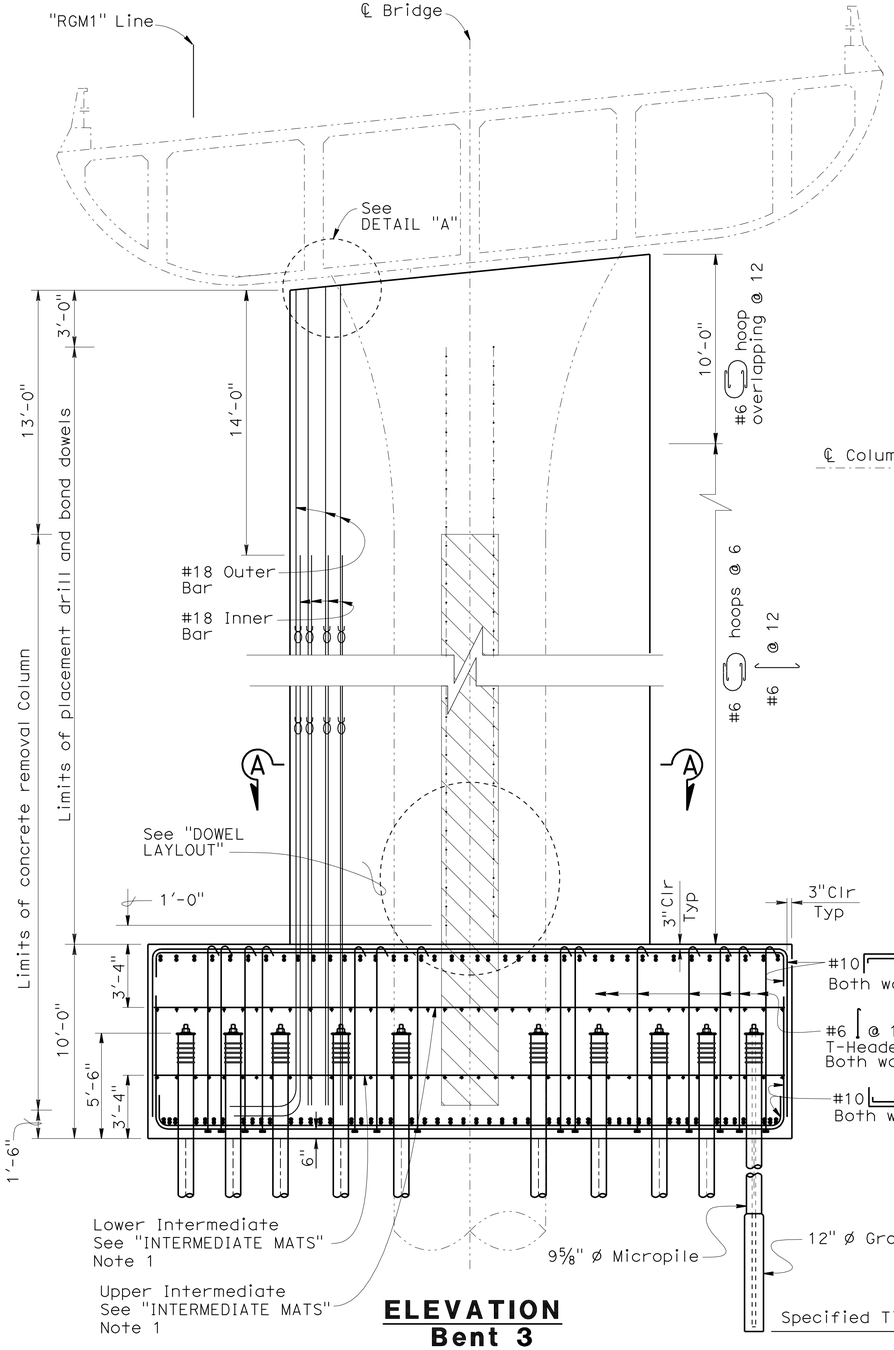

ELEVATION
Bent 3
¼" = 1'

NOTE:
THE CONTRACTOR SHALL VERIFY ALL CONTROLLING FIELD DIMENSIONS BEFORE ORDERING OR FABRICATING ANY MATERIAL.

NOTE:
Not all reinforcement is shown

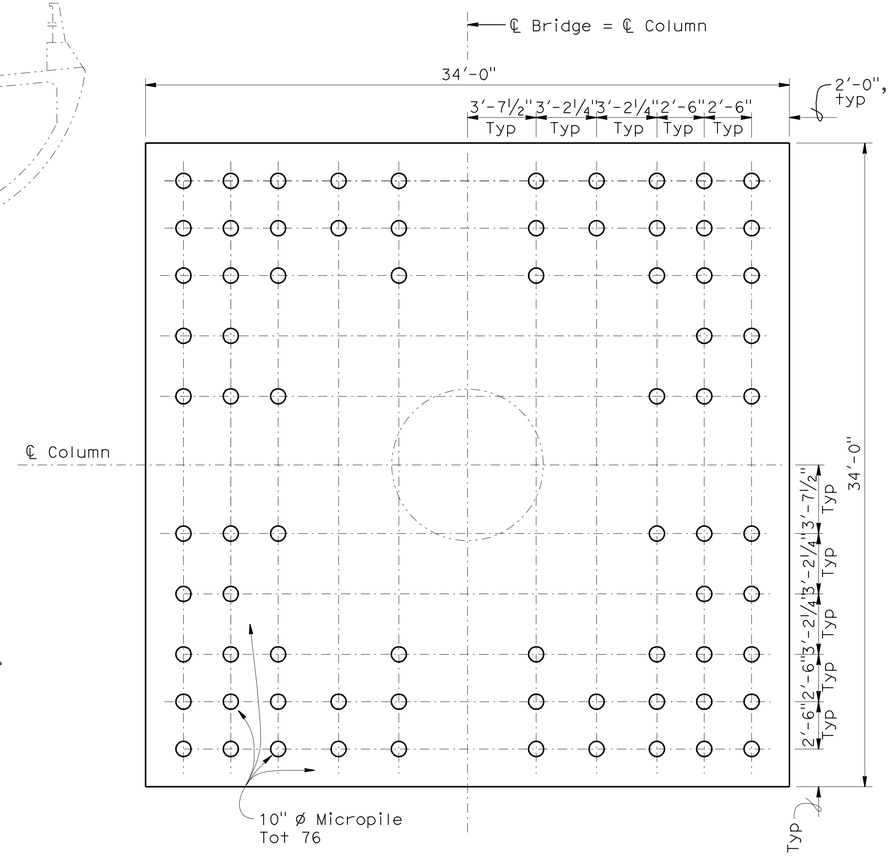

FOOTING PLAN
¼" = 1'

LEGEND:

- Bundled bars
- Denotes new construction
- Denotes existing structure
- Denotes limits of concrete removal

NOTES:

1. For "SECTION A-A", "DETAIL "A"", "DOWEL LAYOUT" and "INTERMEDIATE MATS" see "BENT DETAILS No. 3" sheet.
2. Adjust top mat spacing to clear column reinforcement. Adjust bottom mat spacing to clear micropiles.
3. Reinforcement at existing column region discontinuous.
4. No splices allowed in main column reinforcement.
5. Omit footing stirrups under oval column section.
6. Main column reinforcement standard hook at bottom.
7. For Pile Detail, see "MICROPILE DETAILS" sheets.

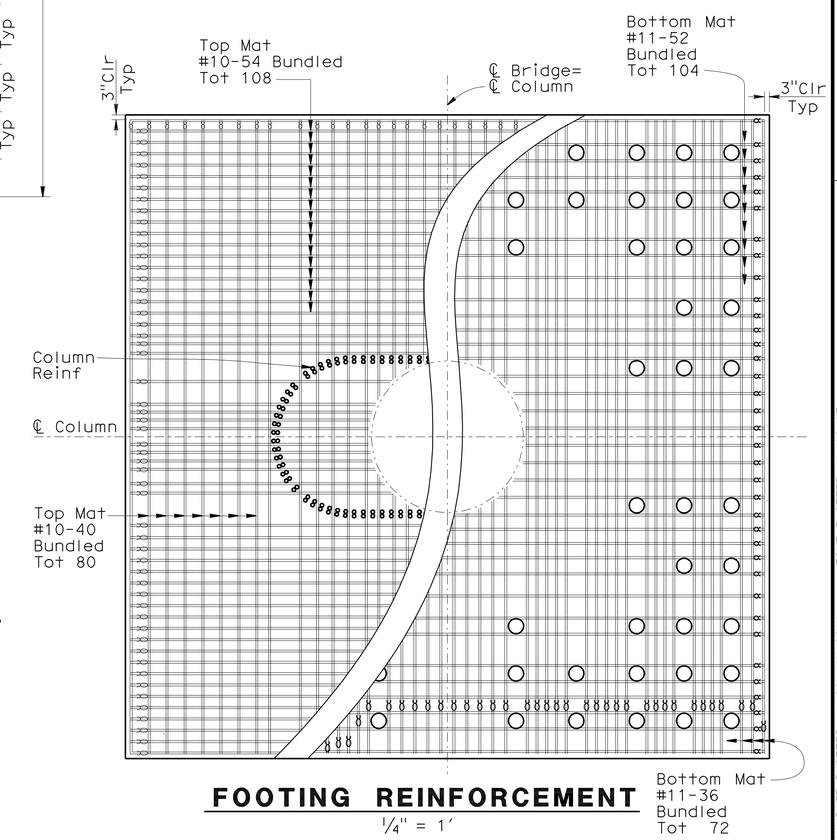

FOOTING REINFORCEMENT
¼" = 1'

DESIGN	BY David Small	CHECKED P. Lutz	
DETAILS	BY PC/TF/DE	CHECKED P. Lutz	
QUANTITIES	BY David Small	CHECKED P. Lutz	

STATE OF CALIFORNIA
DEPARTMENT OF TRANSPORTATION

DIVISION OF ENGINEERING SERVICES
STRUCTURE DESIGN
DESIGN BRANCH 9

BRIDGE NO. 35-0244G
POST MILE 10.8

N280/W92 CONNECTOR OC (RETROFIT)
BENT DETAILS NO. 1

STRUCTURES DESIGN DETAIL SHEET (ENGLISH) (REV. 10/25/05)

ORIGINAL SCALE IN INCHES FOR REDUCED PLANS 0 1 2 3

CU 04245
EA 1A7701

DISREGARD PRINTS BEARING EARLIER REVISION DATES

REVISION DATES: 03-20-09 4-10-09 4-29-09 5-28-09 6-09-09 9-8-10 10-14-10 10-21-10 10-26-10 12-3-10

SHEET 6 OF 21

FILE => 35-0244g-h-bent-det01.dgn

USERNAME => trmikest DATE PLOTTED => 20-JAN-2011 TIME PLOTTED => 12:13

DIST	COUNTY	ROUTE	POST MILES TOTAL PROJECT	SHEET No	TOTAL SHEETS
04	SM	280	10.7/11.0	49	83

REGISTERED CIVIL ENGINEER 12-15-10 DATE

1-18-11
PLANS APPROVAL DATE

REGISTERED PROFESSIONAL ENGINEER PHILIP E. LUTZ No. C55839 Exp. 12/31/12 CIVIL STATE OF CALIFORNIA

The State of California or its officers or agents shall not be responsible for the accuracy or completeness of electronic copies of this plan sheet.

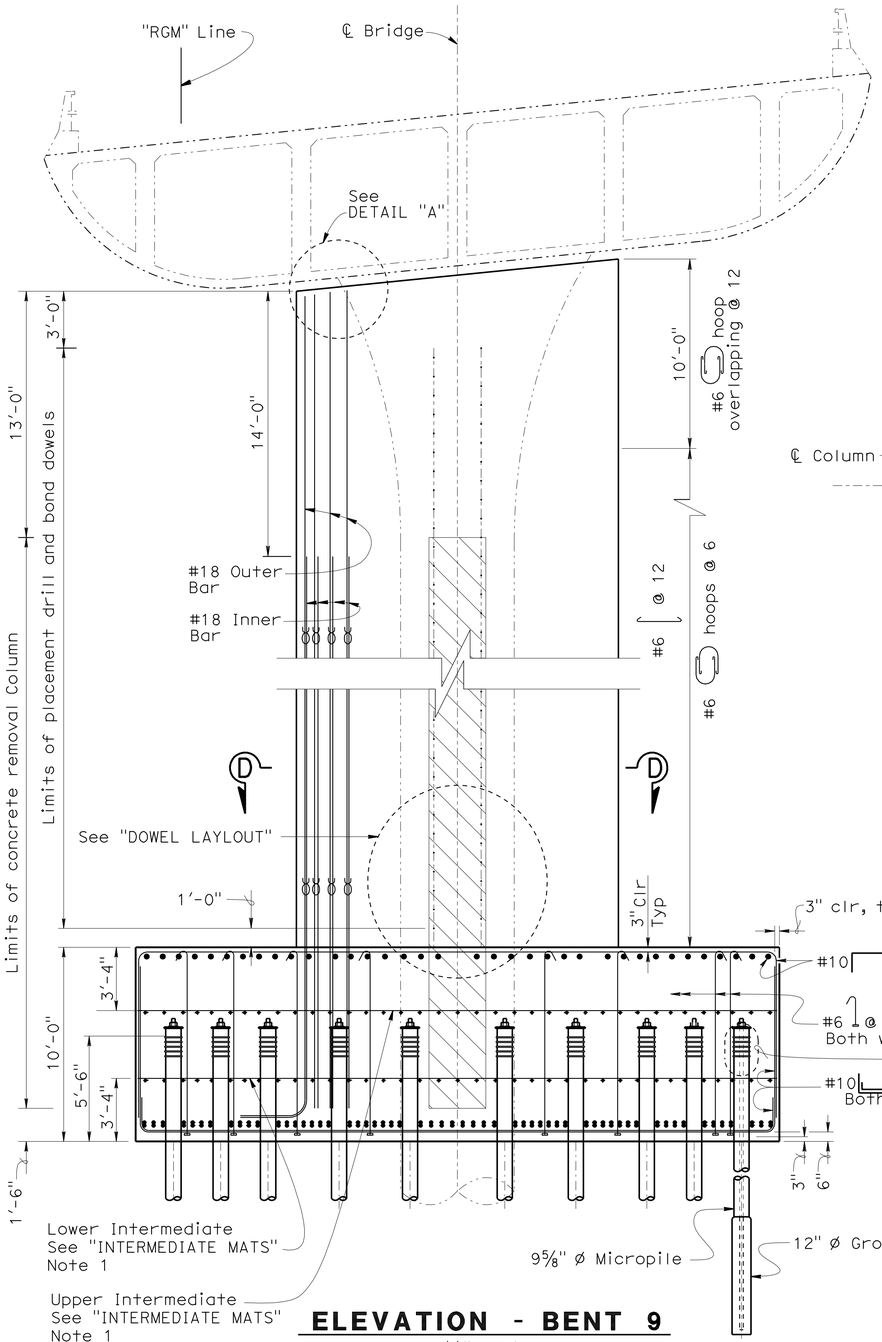

ELEVATION - BENT 9

¼" = 1'

NOTE: Not all reinforcement is shown

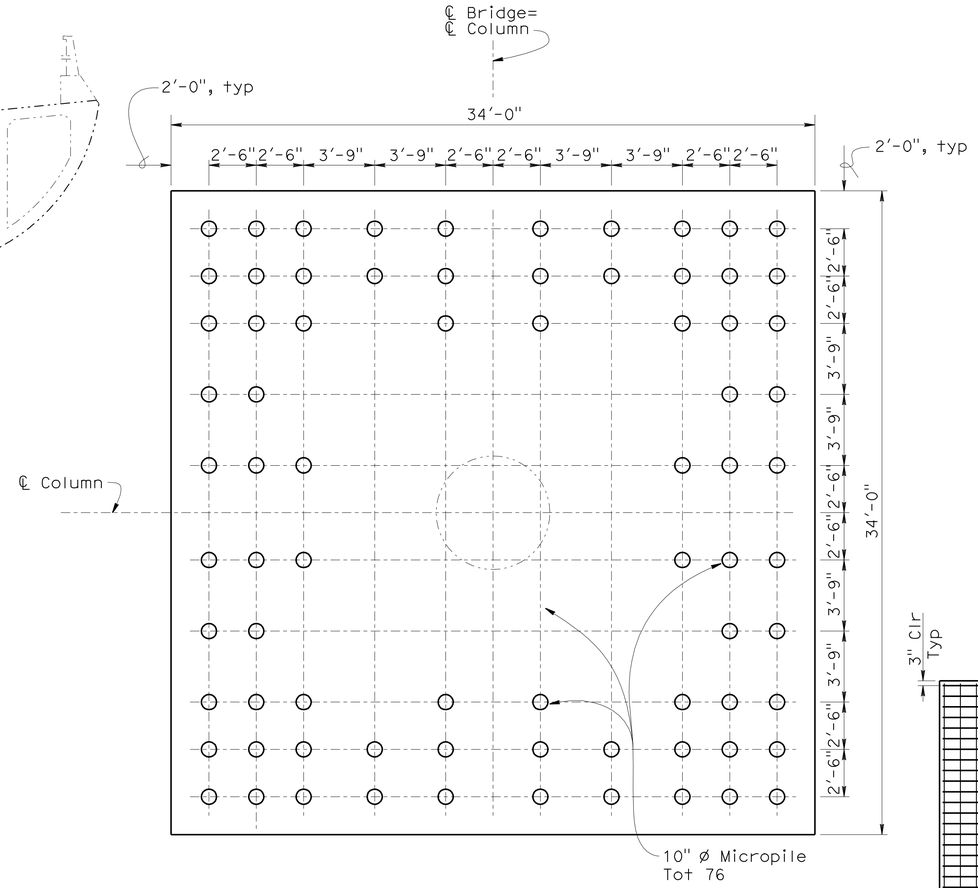

FOOTING PLAN

¼" = 1'

NOTE:

1. For "SECTION D-D", "DETAIL "A", "DOWEL LAYOUT" and "INTERMEDIATE MATS" see "BENT DETAILS No. 3" sheet.
2. Adjust top mat spacing to clear column reinforcement. Adjust bottom mat spacing to clear micropiles.
3. Reinforcement at existing column region discontinuous.
4. No splices allowed in main column reinforcement.
5. Omit footing stirrups under oval column section.
6. Main column reinforcement standard hook at bottom.
7. For Pile Detail, see "MICROPILE DETAILS" SHEET.

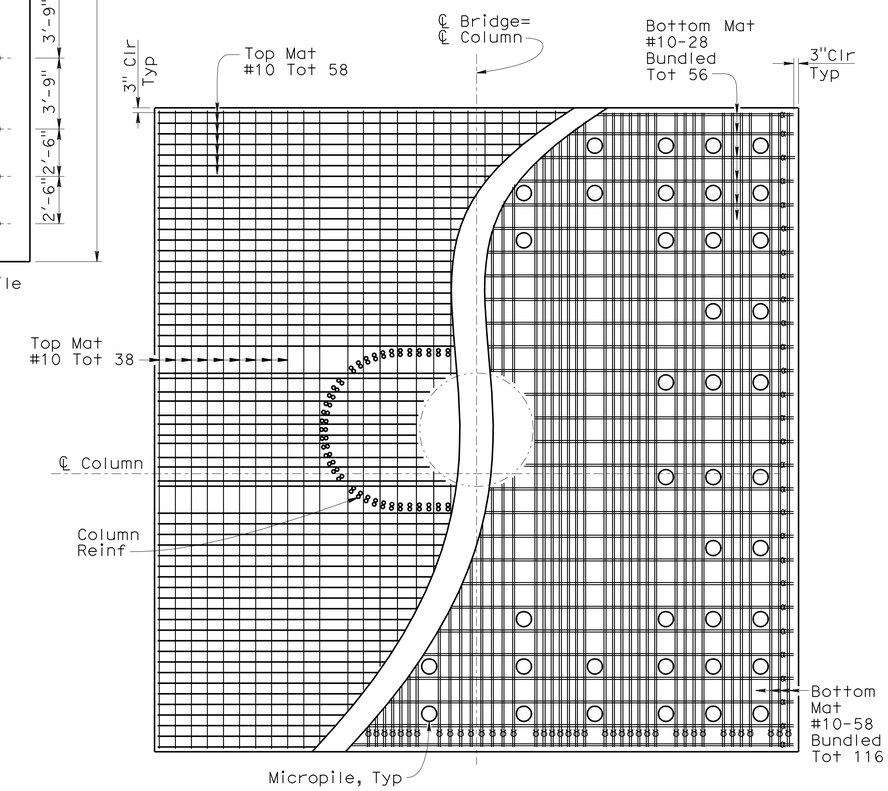

FOOTING REINFORCEMENT

¼" = 1'

LEGEND:

- Bundled bars
- Denotes new construction
- Denotes existing structure
- Denotes limits of concrete removal

NOTE:
THE CONTRACTOR SHALL VERIFY ALL CONTROLLING FIELD DIMENSIONS BEFORE ORDERING OR FABRICATING ANY MATERIAL.

	BY	CHECKED
DESIGN	P. Lutz	P. Lutz
DETAILS	P.Lutz/D. Elliott	P. Lutz
QUANTITIES	David Small	P. Lutz

STATE OF CALIFORNIA
DEPARTMENT OF TRANSPORTATION

DIVISION OF ENGINEERING SERVICES
STRUCTURE DESIGN
DESIGN BRANCH 9

BRIDGE NO. 35-0244G
POST MILE 10.8

N280/W92 CONNECTOR OC (RETROFIT)

BENT DETAILS NO. 2

STRUCTURES DESIGN DETAIL SHEET (ENGLISH) (REV. 10/25/05)

ORIGINAL SCALE IN INCHES FOR REDUCED PLANS 0 1 2 3

CU 04245
EA 1A7701

DISREGARD PRINTS BEARING EARLIER REVISION DATES

REVISION DATES: 4-10-09 5-28-09 6-09-09 9-24-10 10-14-10 10-21-10 10-25-10 12-3-10

SHEET 7 OF 21

FILE => 35-0244g-h-bent-det02.dgn

USERNAME => trmikest DATE PLOTTED => 20-JAN-2011 TIME PLOTTED => 12:13

DIST	COUNTY	ROUTE	POST MILES TOTAL PROJECT	SHEET No	TOTAL SHEETS
04	SM	280	10.7/11.0	50	83

REGISTERED CIVIL ENGINEER — DATE 12-15-10

1-18-11
PLANS APPROVAL DATE

REGISTERED PROFESSIONAL ENGINEER — PHILIP E. LUTZ — No. C55839 — Exp. 12/31/12 — CIVIL — STATE OF CALIFORNIA

The State of California or its officers or agents shall not be responsible for the accuracy or completeness of electronic copies of this plan sheet.

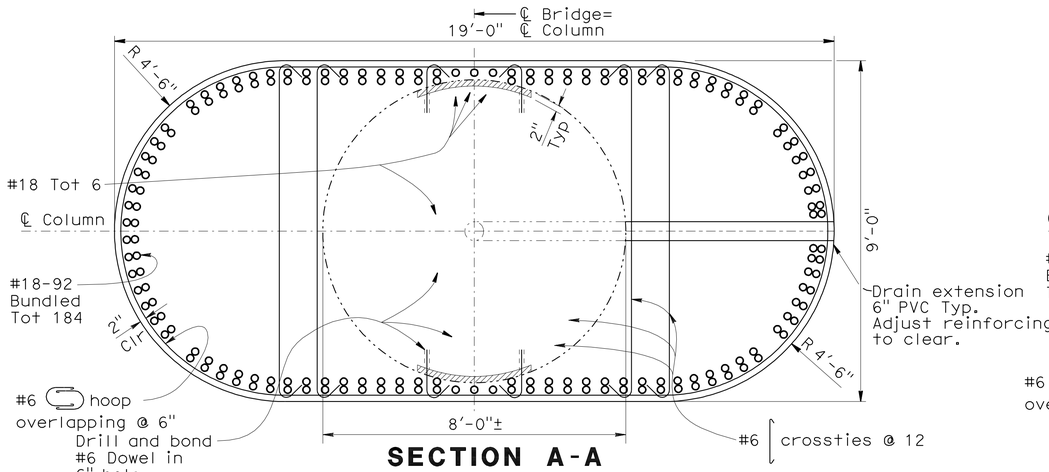

SECTION A-A
Bent 3
½" = 1'

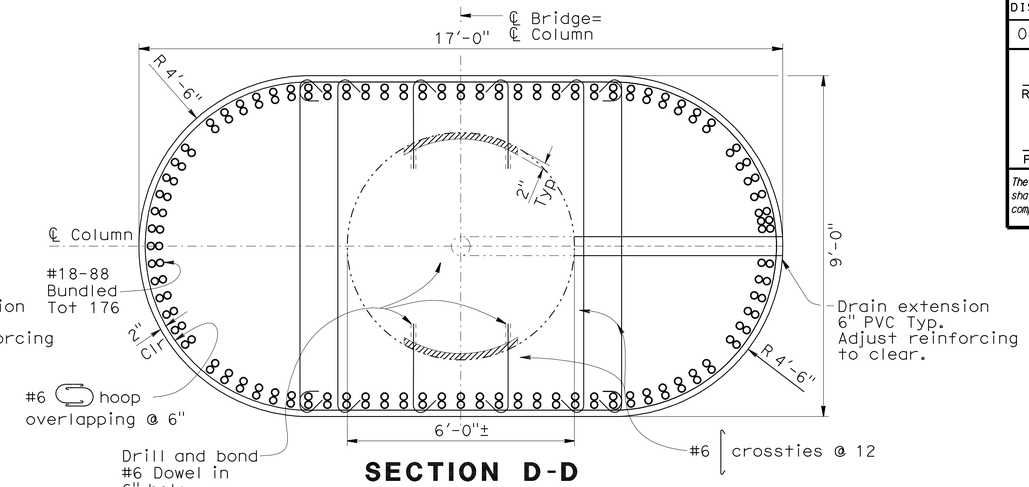

SECTION D-D
Bent 9
½" = 1'

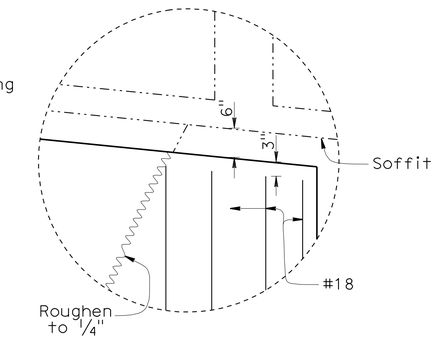

DETAIL "A"
Bents 3 & 9

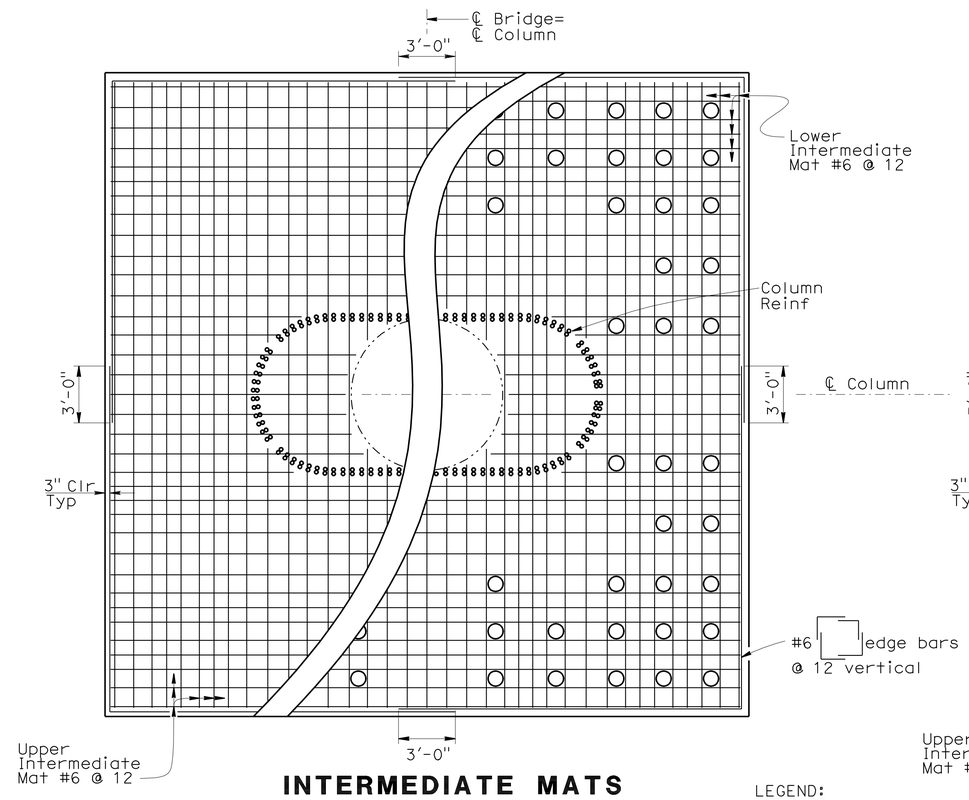

INTERMEDIATE MATS
Bent 3
¼" = 1'

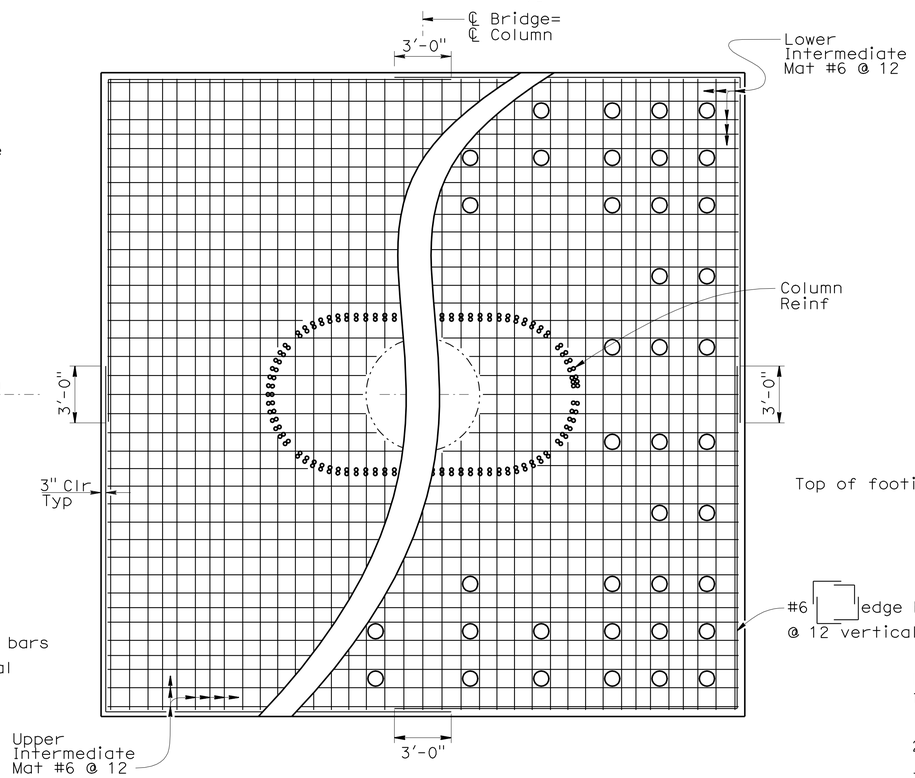

INTERMEDIATE MATS
Bent 9
1/4 " = 1'

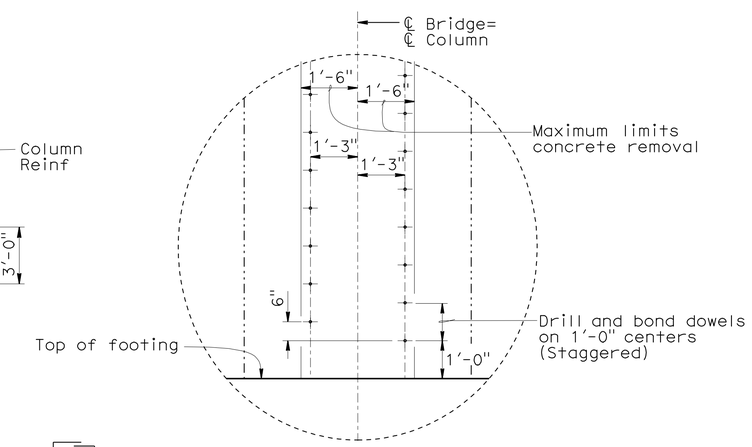

DOWEL LAYOUT
Bents 3 & 9
½" = 1'

NOTES:
1. For location of "SECTION A-A" see "BENT DETAILS No. 1" sheet
2. For location "SECTION D-D" see "BENT DETAILS No. 2" sheet.
3. For locaton "DETAIL "A"", "DOWEL LAYOUT" and "INTERMEDIATE MATS", see "BENT DETAILS 1" and "BENT DETAILS No. 2", sheets.
4. Reinforcement discontinuous at existing column.
5. Adjust intermediate mat spacing to clear column and micropiles.

NOTE:
THE CONTRACTOR SHALL VERIFY ALL CONTROLLING FIELD DIMENSIONS BEFORE ORDERING OR FABRICATING ANY MATERIAL.

LEGEND:
- Denotes new construction
- Denotes existing structure
- Denotes limits concrete removal

	BY	CHECKED
DESIGN	David Small	P. Lutz
DETAILS	PC/TF/DE	P. Lutz
QUANTITIES	David Small	P. Lutz

STATE OF CALIFORNIA
DEPARTMENT OF TRANSPORTATION

DIVISION OF ENGINEERING SERVICES
STRUCTURE DESIGN
DESIGN BRANCH 9

BRIDGE NO. 35-0244G
POST MILE 10.8

N280/W92 CONNECTOR OC (RETROFIT)
BENT DETAILS No. 3

STRUCTURES DESIGN DETAIL SHEET (ENGLISH) (REV. 10/25/05)

ORIGINAL SCALE IN INCHES FOR REDUCED PLANS 0 1 2 3

CU 04245
EA 1A7701

DISREGARD PRINTS BEARING EARLIER REVISION DATES

REVISION DATES: 03-26-09 4-16-09 5-28-09 10-21-10 10-26-10 12-3-10

SHEET 8 OF 21

FILE => 35-0244g-h-bent-det03.dgn

USERNAME => ttmirkes1 DATE PLOTTED => 20-JAN-2011 TIME PLOTTED => 12:13

DIST	COUNTY	ROUTE	POST MILES TOTAL PROJECT	SHEET No	TOTAL SHEETS
04	SM	280	10.7/11.0	51	83

REGISTERED CIVIL ENGINEER 12-15-10 DATE

1-18-11
PLANS APPROVAL DATE

REGISTERED PROFESSIONAL ENGINEER PHILIP E. LUTZ No. C55839 Exp. 12/31/12 CIVIL STATE OF CALIFORNIA

The State of California or its officers or agents shall not be responsible for the accuracy or completeness of electronic copies of this plan sheet.

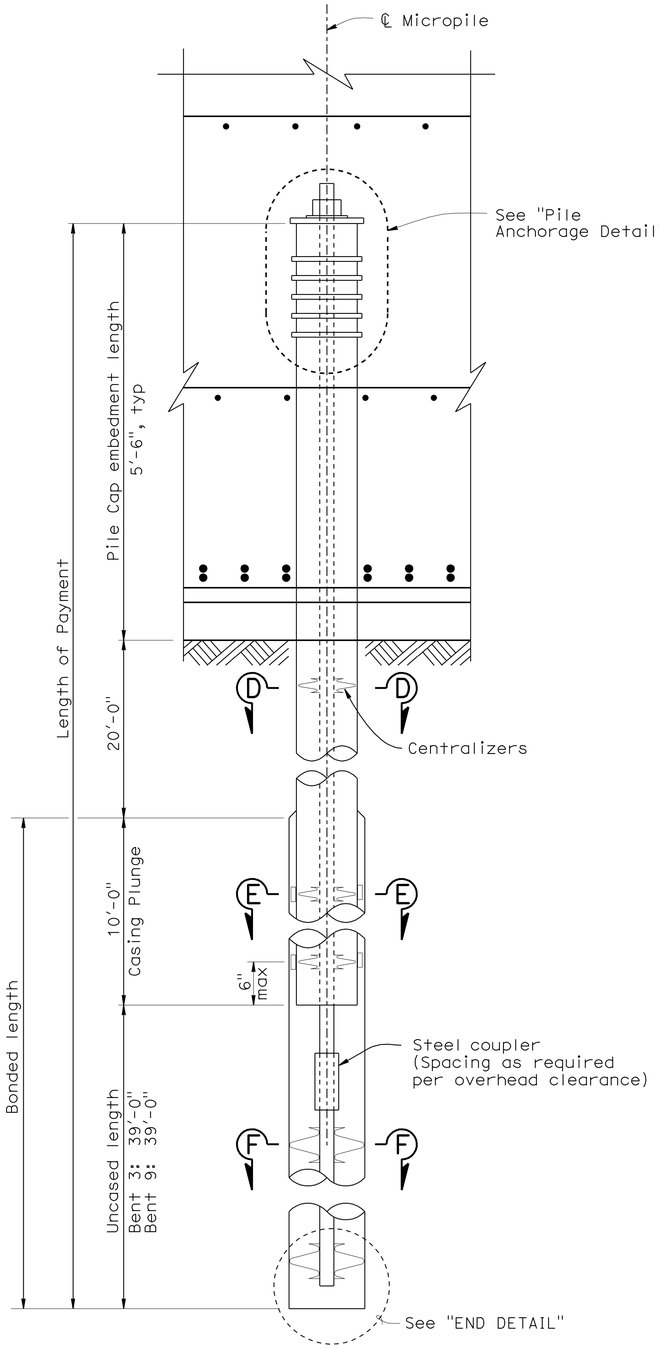

PILE DETAIL
1" = 1'

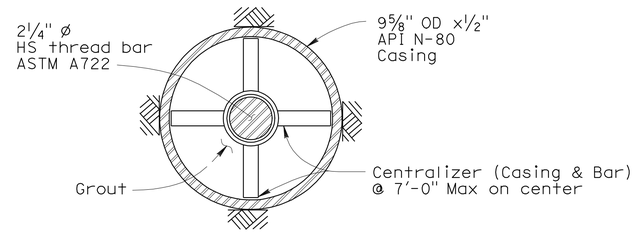

SECTION D-D
3" = 1'

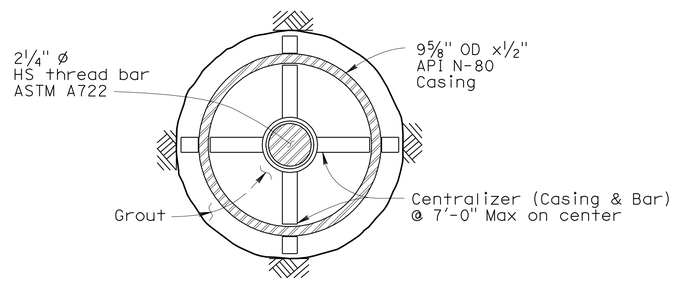

SECTION E-E
3" = 1'

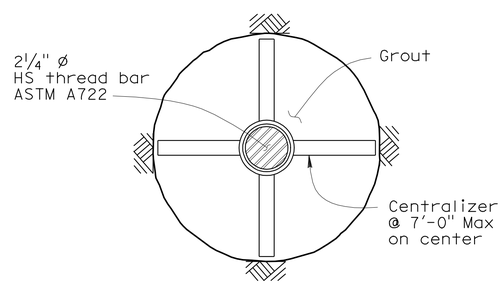

SECTION F-F
3" = 1'

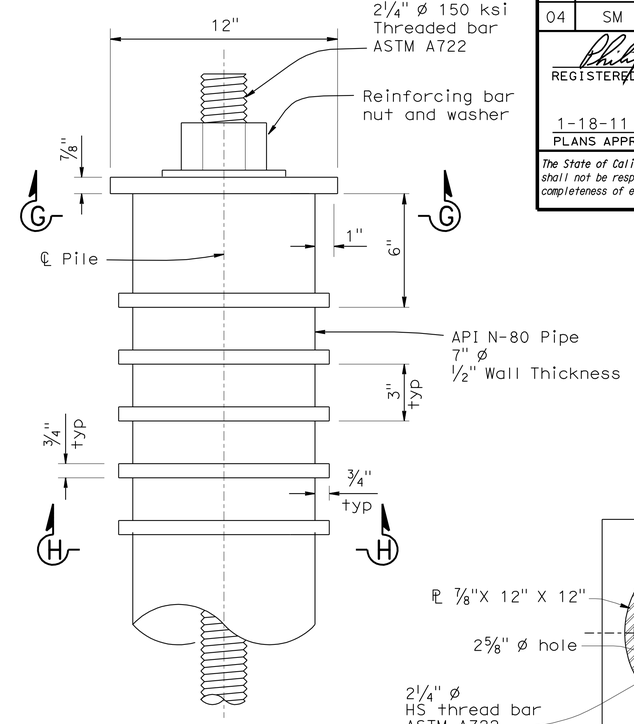

PILE DETAIL
3" = 1'

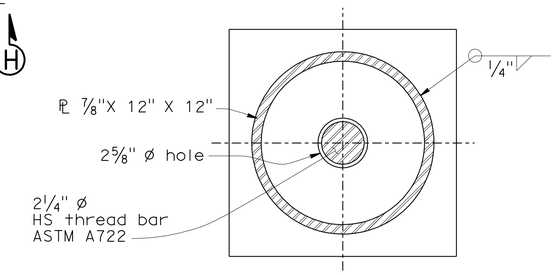

SECTION G-G
3" = 1'

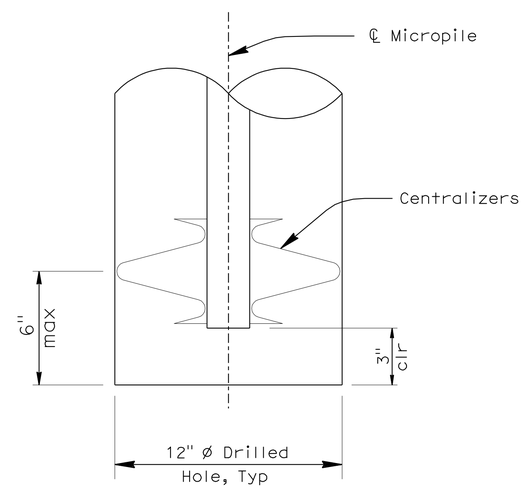

END DETAIL
3" = 1'

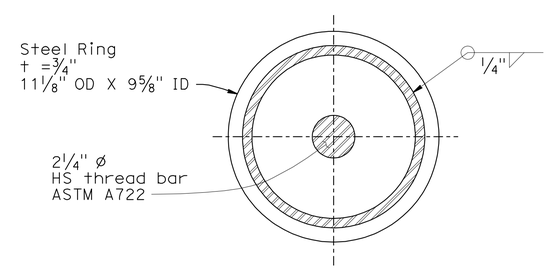

SECTION H-H
3" = 1'

NOTE:
THE CONTRACTOR SHALL VERIFY ALL CONTROLLING FIELD DIMENSIONS BEFORE ORDERING OR FABRICATING ANY MATERIAL.

	BY	CHECKED
DESIGN	P. Lutz	P. Lutz
DETAILS	P.Lutz	P. Lutz
QUANTITIES	David Small	P. Lutz

STATE OF CALIFORNIA
DEPARTMENT OF TRANSPORTATION

DIVISION OF ENGINEERING SERVICES
STRUCTURE DESIGN
DESIGN BRANCH 9

BRIDGE NO. 35-0244G
POST MILE 10.8

N280/W92 CONNECTOR OC (RETROFIT)
MICROPILE DETAILS

STRUCTURES DESIGN DETAIL SHEET (ENGLISH) (REV. 10/25/05)

ORIGINAL SCALE IN INCHES FOR REDUCED PLANS 0 1 2 3

CU 04245
EA 1A7701

DISREGARD PRINTS BEARING EARLIER REVISION DATES

REVISION DATES: 4-10-09, 5-28-09, 6-04-09, 9-03-10, 10-21-10, 12-8-10, 12-10-10

SHEET 9 OF 21

FILE => 35-0244g-h-micropile details.dgn

USERNAME => ttmikes1 DATE PLOTTED => 20-JAN-2011 TIME PLOTTED => 12:13

DIST	COUNTY	ROUTE	POST MILES TOTAL PROJECT	SHEET No	TOTAL SHEETS
04	SM	280	10.7/11.0	52	83

REGISTERED CIVIL ENGINEER 12-15-10 DATE

1-18-11
PLANS APPROVAL DATE

REGISTERED PROFESSIONAL ENGINEER PHILIP E. LUTZ No. C55839 Exp. 12/31/12 CIVIL STATE OF CALIFORNIA

The State of California or its officers or agents shall not be responsible for the accuracy or completeness of electronic copies of this plan sheet.

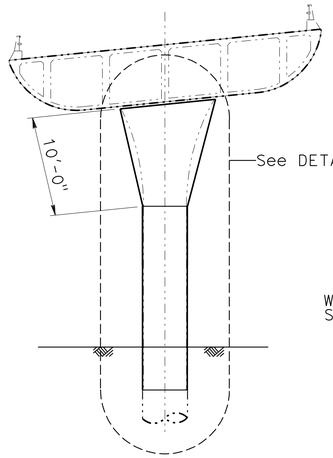

TYPICAL ELEVATION
BENTS 2, 4 THRU 8 AND 10

1/8 "= 1'

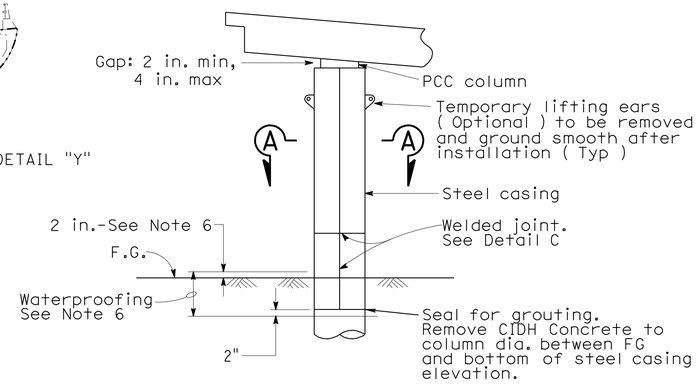

CLASS F COLUMN
DETAIL "Y"

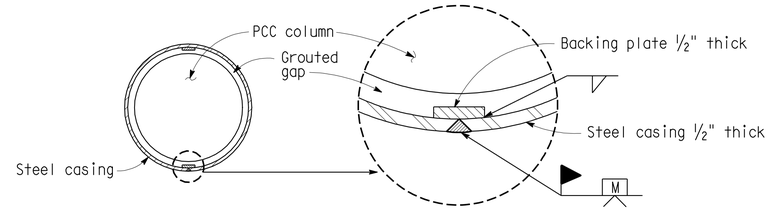

SECTION A-A
ROUND COLUMN

Minimum inside diameter of steel casing = 1½" greater than nominal column diameter for Class F

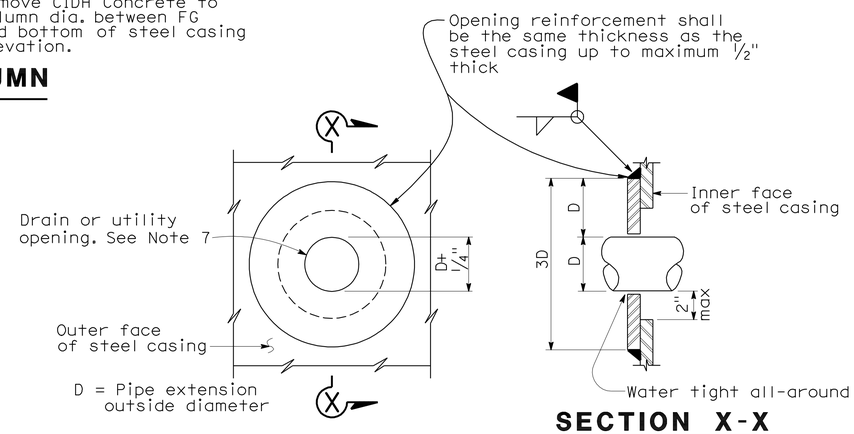

SECTION X-X
CASING OPENING

Note: Opening reinforcement required for drain or utility openings larger than 4 in.

Notes:

1) Inside surface to remain flush. Minimum clearance from PCC column to casings shall be maintained.
2) Appropriate injection nozzles to be provided on casing, but removed and ground flush following completion of grouting operation.
3) All voids between steel casings and polyethylene (Class P and Class P/F), and steel casing and PCC column (Class F) to be filled with grout.
4) Location and number of vertical and horizontal welds to be determined by the Contractor, and subject to the approval of the Engineeer. The locaction of casing welds are for illustration. No skip welds allowed.
5) Circular steel casing to be ½" thick minimum. Backing plates to be ½" thick.
6) Waterproofing limits for steel casings. Typical for Classes "P", "F" and "P/F".
7) For pipe extensions, opening shall be no more than ¼" greater than the pipe extension diameter. For other openings, the opening diameter to be determined by the Engineer.
8) For top of column elevations see "FOUNDATION PLAN No. 1", "FOUNDATION PLAN No. 2", "FOUNDATION PLAN No. 3" sheets.

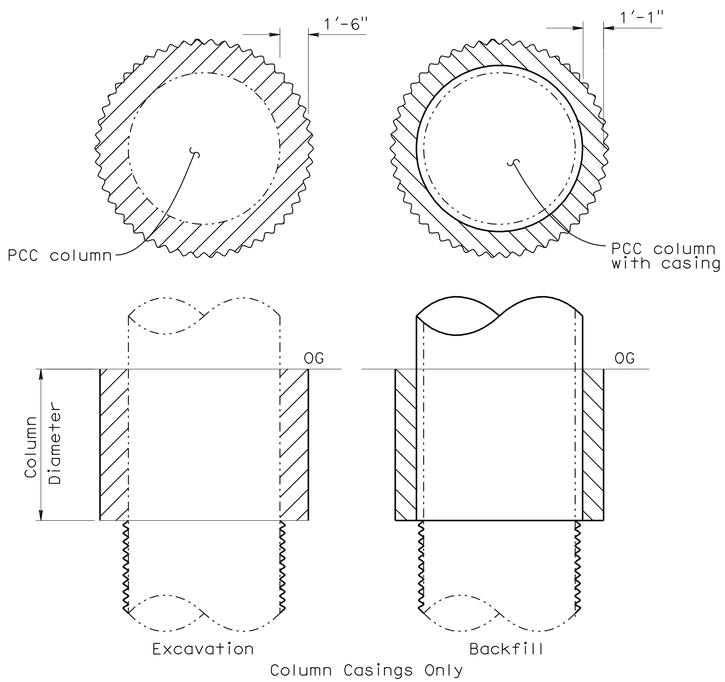

BENTS 2, 4 THRU 8 AND 10

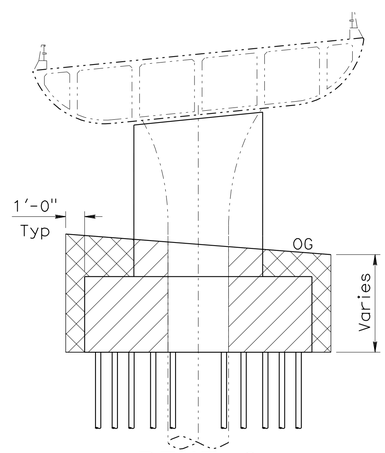

BENT 9

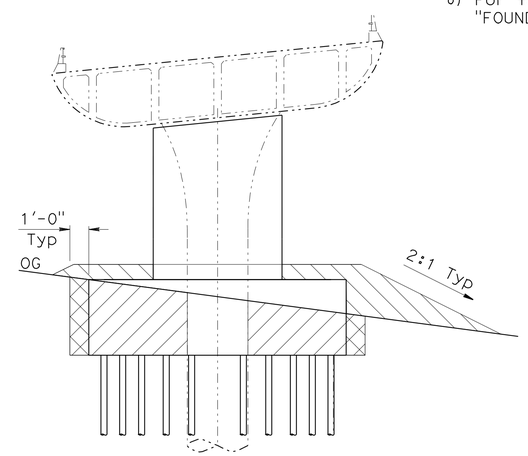

BENT 3

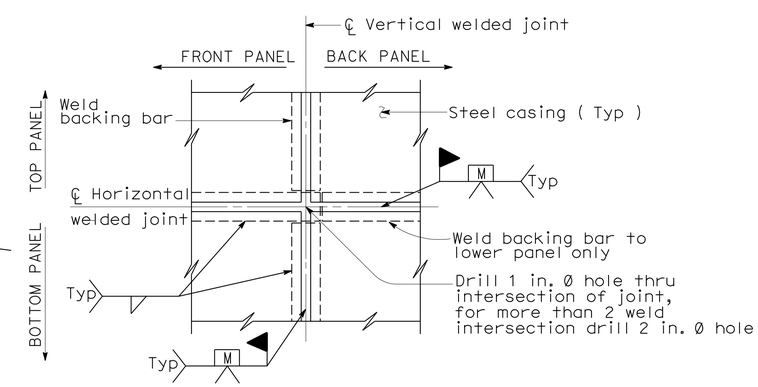

(TWO WELDED INTERSECTION JOINT)
DETAIL C

NOTE:
THE CONTRACTOR SHALL VERIFY ALL CONTROLLING FIELD DIMENSIONS BEFORE ORDERING OR FABRICATING ANY MATERIAL.

LIMITS OF PAYMENT FOR EXCAVATION AND BACKFILL

No Scale

LEGEND:

Excavation
Backfill
Denotes new construction
Denotes existing structure

	BY	CHECKED
DESIGN	David Small	P. Lutz
DETAILS	Pete Carreon	P. Lutz
QUANTITIES	David Small	P. Lutz

STATE OF CALIFORNIA
DEPARTMENT OF TRANSPORTATION

DIVISION OF ENGINEERING SERVICES
STRUCTURE DESIGN
DESIGN BRANCH 9

BRIDGE NO. 35-0244G
POST MILE 10.8

N280/W92 CONNECTOR OC (RETROFIT)
COLUMN DETAILS

STRUCTURES DESIGN DETAIL SHEET (ENGLISH) (REV. 10/25/05)

ORIGINAL SCALE IN INCHES FOR REDUCED PLANS 0 1 2 3

CU 04245
EA 1A7701

DISREGARD PRINTS BEARING EARLIER REVISION DATES 04-04-09 04-14-09 10-21-10

REVISION DATES

SHEET 10 OF 21

FILE => 35-0244g-j-cdet01.dgn

USERNAME => trmikesl DATE PLOTTED => 20-JAN-2011 TIME PLOTTED => 12:13

DIST	COUNTY	ROUTE	POST MILES TOTAL PROJECT	SHEET No	TOTAL SHEETS
04	SM	280	10.7/11.0	53	83

REGISTERED CIVIL ENGINEER 12-15-10 DATE

1-18-11
PLANS APPROVAL DATE

REGISTERED PROFESSIONAL ENGINEER PHILIP E. LUTZ No. C55839 Exp. 12/31/12 CIVIL STATE OF CALIFORNIA

The State of California or its officers or agents shall not be responsible for the accuracy or completeness of electronic copies of this plan sheet.

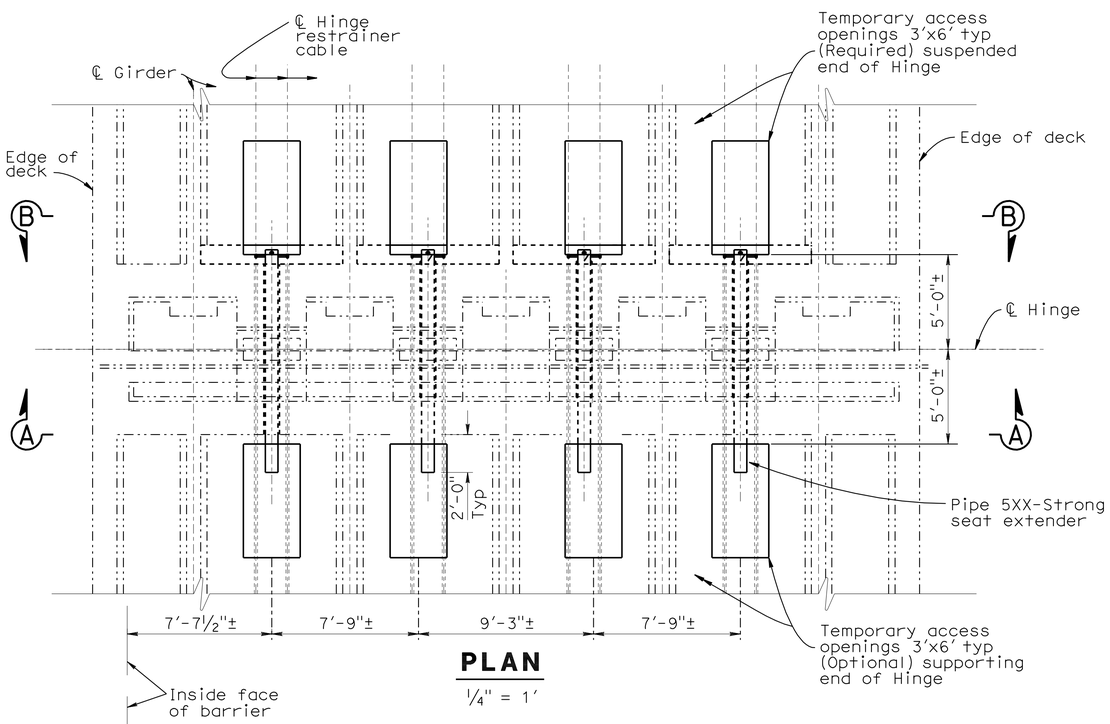

PLAN

¼" = 1'

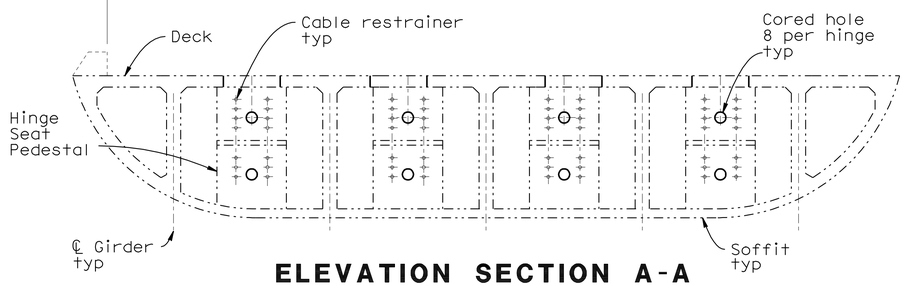

ELEVATION SECTION A-A

¼" = 1'

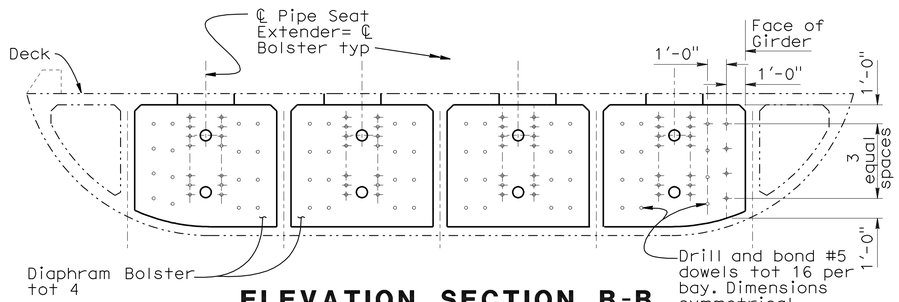

ELEVATION SECTION B-B

¼" = 1'

NOTE:
THE CONTRACTOR SHALL VERIFY ALL CONTROLLING FIELD DIMENSIONS BEFORE ORDERING OR FABRICATING ANY MATERIAL.

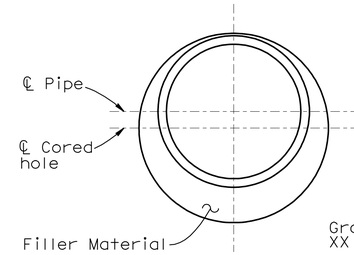

SECTION C-C

No Scale

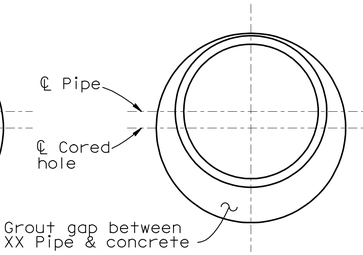

SECTION D-D

No Scale

Note:
1. Shim pipe to top of cored hole prior to grouting
2. Upper section shown, lower similar.

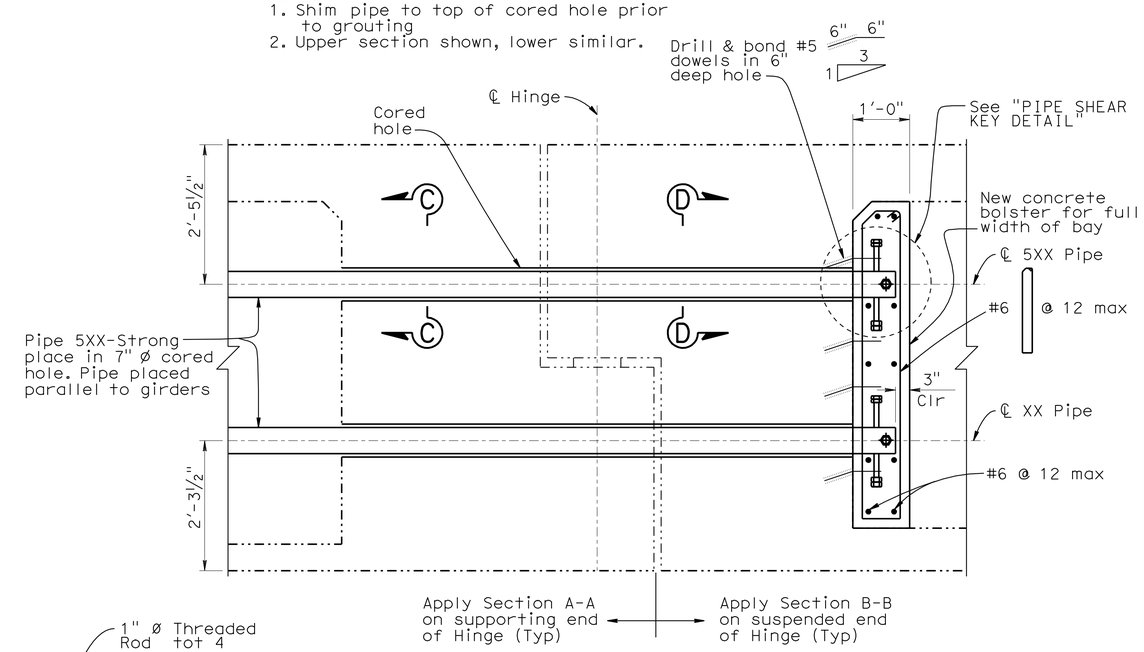

HINGE SECTION

¾" = 1'

NOTE:
Not all rebars were shown for clarity.

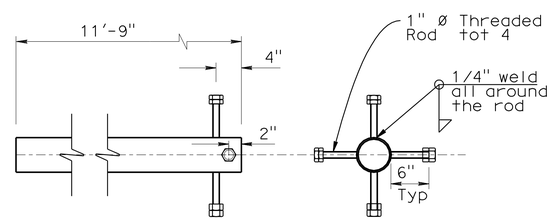

PIPE SHEAR KEY DETAIL

Scale 1"=1'

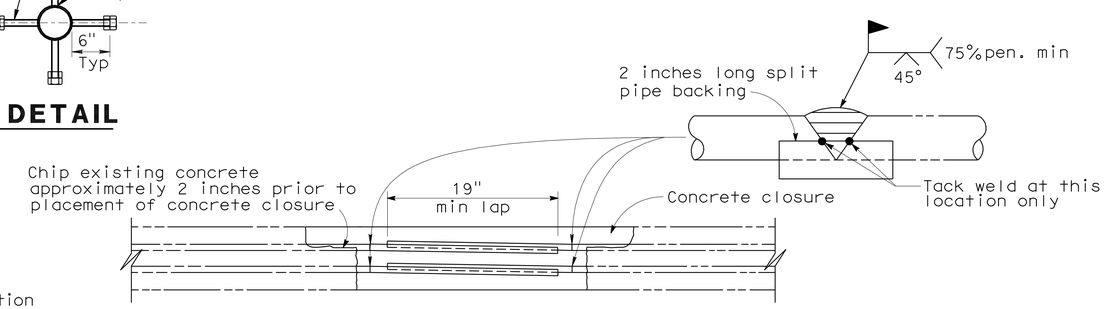

DECK ACCESS CLOSURE

NO SCALE

Note: Replace deck reinf each. Butt weld to existing.

Note:
——— Denotes new construction
-·-·- Denotes existing structure

DESIGN	BY David Small	CHECKED P. Lutz	
DETAILS	BY Pete Carreon/T. Fairall	CHECKED P. Lutz	
QUANTITIES	BY David Small	CHECKED P. Lutz	

STATE OF CALIFORNIA
DEPARTMENT OF TRANSPORTATION

DIVISION OF ENGINEERING SERVICES
STRUCTURE DESIGN
DESIGN BRANCH 9

BRIDGE NO. 35-0244G
POST MILE 10.8

N280/W92 CONNECTOR OC (RETROFIT)
SEAT EXTENDER DETAILS

STRUCTURES DESIGN DETAIL SHEET (ENGLISH) (REV. 10/25/05)

ORIGINAL SCALE IN INCHES FOR REDUCED PLANS 0 1 2 3

CU 04245
EA 1A7701

DISREGARD PRINTS BEARING EARLIER REVISION DATES

REVISION DATES: 04-04-09 04-14-09 04-16-09 5-05-09 10-21-10

SHEET 11 OF 21

FILE => 35-0244g-n-seat_det.dgn

USERNAME => trmikest DATE PLOTTED => 20-JAN-2011 TIME PLOTTED => 12:14

DIST	COUNTY	ROUTE	POST MILES TOTAL PROJECT	SHEET No	TOTAL SHEETS
04	SM	280	10.7/11.0	54	83

REGISTERED GEOLOGIST — DATE 07-15-09

REGISTERED GEOLOGIST Chris Risden No. 7795 Exp. 9-30-09 STATE OF CALIFORNIA

1-18-11
PLANS APPROVAL DATE

The State of California or its officers or agents shall not be responsible for the accuracy or completeness of electronic copies of this plan sheet.

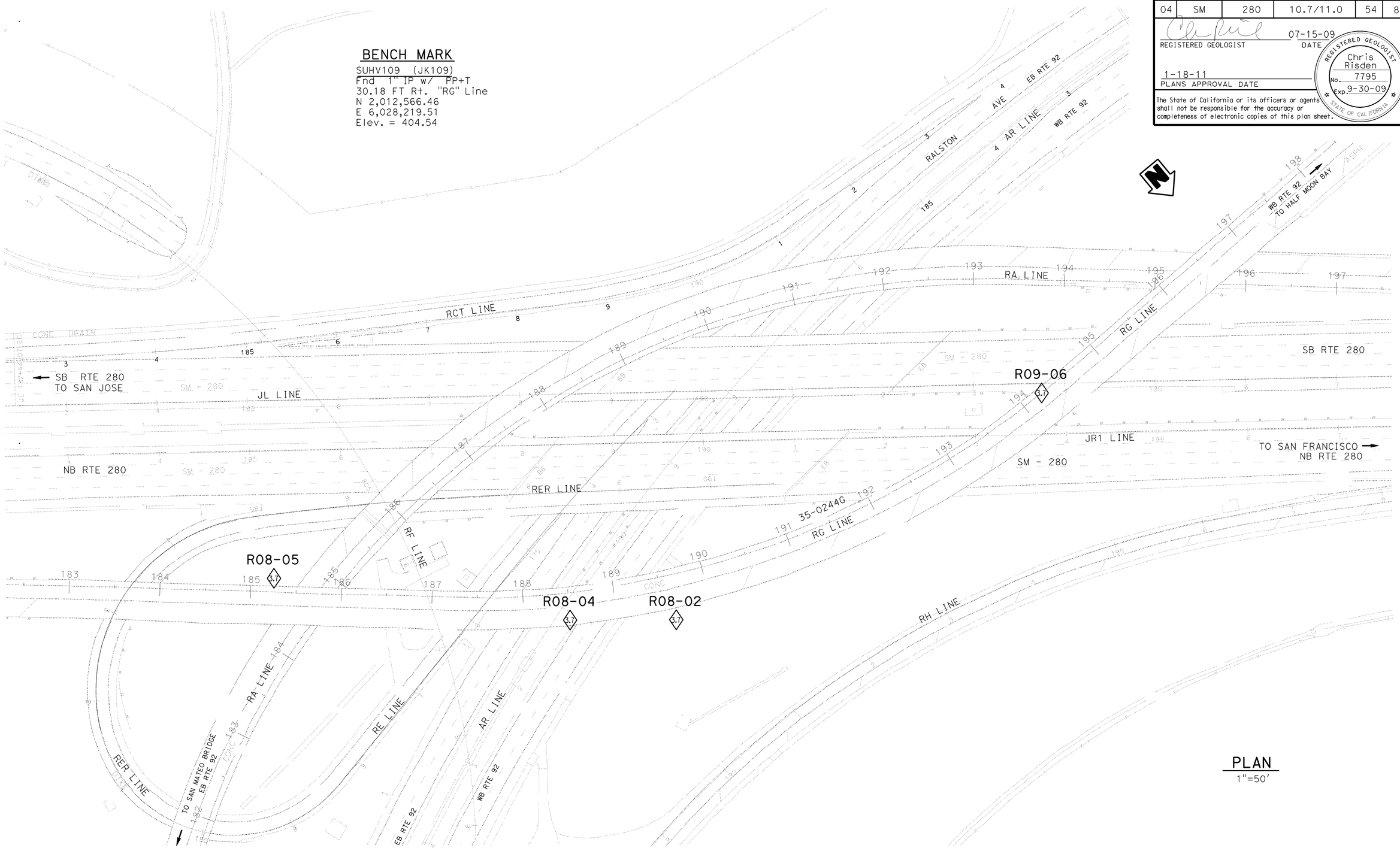

ENGINEERING SERVICES	GEOTECHNICAL SERVICES	STATE OF CALIFORNIA DEPARTMENT OF TRANSPORTATION	DIVISION OF ENGINEERING SERVICES OFFICE OF GEOTECHNICAL DESIGN BRANCH	BRIDGE NO. 35-0244G / POST MILES 10.2/10.7	N280/W92 CONNECTOR OC (RETROFIT) LOG OF TEST BORINGS 1 of 10
FUNCTIONAL SUPERVISOR NAME: G. Wilcox	DRAWN BY: M. Reynolds 03/09 CHECKED BY: B. Price	FIELD INVESTIGATION BY: C. Risden			
OGS CIVIL LOG OF TEST BORINGS SHEET	ORIGINAL SCALE IN INCHES FOR REDUCED PLANS 0 1 2 3	CU 04 EA 1A7701	DISREGARD PRINTS BEARING EARLIER REVISION DATES	REVISION DATES	SHEET 12 OF 21

FILE => 35-0244g-z-1tb01.dgn

USERNAME => frmikes1 DATE PLOTTED => 20-JAN-2011 TIME PLOTTED => 12:14

BENCH MARK

SUHV109 (JK109)
Fnd 1" IP w/ PP+T
30.18 FT Rt. "RG" Line
N 2,012,566.46
E 6,028,219.51
Elev. = 404.54

(FOR BORING LOCATION SEE PLAN, LOTB SHEET 1 OF 10)

15' Lt Sta 185+25 RG Line

R08-05

Elev.	Depth	REC	RQD	Description
385				
380				
378'	3.7			IGNEOUS ROCK (Pyroxenite), dark green, moderately weathered, hard. (Fill?)
375		REC=6%	RQD=0%	
	9 11.4			PA PI CLAYEY SAND with GRAVEL (SC), firm, grey brown, moist, 21% GRAVEL, 46%SAND, 33% FINES, subangular to rounded, fine GRAVEL, well graded.
370		REC=9%	RQD=NR*	
	12 11.4			No recovery.
365		REC=100%	RQD=NR*	UC METAMORPHIC ROCK (Argillite and Serpentine), dark grey to olive green, intensely weathered, moderately soft, intensely fractured to locally sheared, extremely weak shears contain CLAY, firm, grey green,
		REC=NR*	RQD=NR*	
	22 11.4			PA PI moist, moderately plastic.
360		REC=29%	RQD=NR*	METAMORPHIC ROCK (Argillite), dark grey to black, moderately soft to moderately hard, very intensely fractured, intensely weathered, locally sheared in angular fragments.
	9 11.5			PA PI -very intensely weathered.
355		REC=34%	RQD=NR*	{CLAYEY SAND with GRAVEL (SC), firm, grey, moist, 25% GRAVEL, 30% SAND, 45% FINES, moderate plasticity}.
	16 11.4			-dark grey to black, very intensely weathered, soft, sheared, (SANDY CLAY, stiff, nonplastic).
350		REC=46%	RQD=0%	METAMORPHIC ROCK (Argillite and Graywacke), dark grey to black, intensely weathered, soft to moderately hard, sheared.
	14 11.4			some CALCITE veining, less GRAYWACKE.
345		REC=0%	RQD=0%	No recovery.
		REC=67%	RQD=0%	
	14 11.4			PA PI
340		REC=100%	RQD=NR*	UC METAMORPHIC ROCK (Metagraywacke), dark grey, moderately weathered, hard, not fractured,very weak.
		REC=90%	RQD=0%	METAMORPHIC ROCK (Argillite), dark grey to black, moderately weathered, moderately soft, very intensely fractured, sheared.
	23 11.4			
335		REC=100%	RQD=0%	METAMORPHIC ROCK (Metagraywacke), dark grey, moderately weathered, moderately hard to hard, intensely fractured, CALCITE veining, fracture zone at elev. 335.5'contains fine GRAVEL.
		REC=40%	RQD=0%	
	30 11.4			METAMORPHIC ROCK (Argillite), soft, very intensely fractured, sheared, very intensely weathered.
330		REC=100%	RQD=0%	CALCITE Vein.
		REC=NR*	RQD=40%	-moderately weathered, moderately soft.
	19 11.4			-very intensely weathered, soft, SANDY CLAY, very stiff, dry, nonplastic).
325		REC=23%	RQD=0%	No recovery.
	30 11.4			-(with some SERPENTINE fragments).
320		REC=100%	RQD=0%	
		REC=53%	RQD=0%	
	46 11.4			
315		REC=67%	RQD=0%	METAMORPHIC ROCK (Argillite and Graywacke), intensely weathered, soft, intensely fractured, sheared.
		REC=100%	RQD=0%	fracture zone, moderately weathered.
	39 11.4			
310		REC=75%	RQD=0%	METAMORPHIC ROCK (Argillite), grey, intensely weathered, soft, very intensely fractured, (SANDY CLAY, hard, dry, nonplastic).
		REC=100%	RQD=20%	METAMORPHIC ROCK (Metagraywacke), grey, moderately weathered, hard, moderately fractured, 3" wide fracture zone.
	61 11.4			
305		REC=83%	RQD=NR*	METAMORPHIC ROCK (Argillite), grey, intensely weathered, soft, very intensely fractured, sheared.
		REC=57%	RQD=NR*	METAMORPHIC ROCK (Metagraywacke and Argillite), grey, moderately weathered, moderately soft to hard, very intensely fractured, intensely sheared.
	50 6" 11.4			
300		REC=28%	RQD=0%	
		REC=60%	RQD=30%	
	40 11.4			
295		REC=100%	RQD=0%	-moderately weathered.
		REC=NR*	RQD=0%	
	57 7" 11.4			
290		REC=83%	RQD=0%	UC METAMORPHIC ROCK (Metagraywacke), grey, slightly weathered, hard, moderately fractured, fractures are slightly rough, some healed ($CaCo_3$), weak.
		REC=100%	RQD=47%	
	50 11.4			1" wide fracture zone.
285		REC=100%	RQD=73%	UC METAMORPHIC ROCK (Metagraywacke), very slightly weathered, hard, slightly to moderately fractured, strong to very strong.
280		REC=100%	RQD=57%	
275		REC=94%	RQD=100%	UC -slightly weathered, slightly fractured.
		REC=100%	RQD=100%	
270		REC=100%	RQD=100%	
		REC=100%	RQD=100%	
265		REC=NR*	RQD=NR*	UC -very hard, very strong. -unfractured.
260				12-22/24-08 Terminated at El 264.5' ER =84%

185+00 186+00 187+00

PROFILE

HOR. 1"=20'
VER. 1"=5'

NOTE: This LOTB sheet was prepared in accordance with the Caltrans Soil & Rock Logging, Classification, and Presentation Manual (June 2007).

*NR: Not Recorded.

REGISTERED GEOLOGIST 07-15-09 DATE

1-18-11 PLANS APPROVAL DATE

REGISTERED GEOLOGIST Chris Risden No. 7795 Exp. 9-30-09 STATE OF CALIFORNIA

The State of California or its officers or agents shall not be responsible for the accuracy or completeness of electronic copies of this plan sheet.

DIST	COUNTY	ROUTE	POST MILES TOTAL PROJECT	SHEET NO	TOTAL SHEETS
04	SM	280	10.7/11.0	55	83

ENGINEERING SERVICES

FUNCTIONAL SUPERVISOR
NAME: G. Wilcox

DRAWN BY: M. Reynolds 03/09
CHECKED BY: B. Price

GEOTECHNICAL SERVICES

FIELD INVESTIGATION BY: C. Risden

ORIGINAL SCALE IN INCHES FOR REDUCED PLANS 0 1 2 3

STATE OF CALIFORNIA
DEPARTMENT OF TRANSPORTATION

DIVISION OF ENGINEERING SERVICES
OFFICE OF GEOTECHNICAL
DESIGN BRANCH

CU 04
EA 1A7701

BRIDGE NO. 35-0244G
POST MILES 10.2/10.7

DISREGARD PRINTS BEARING EARLIER REVISION DATES

N280/W92 CONNECTOR OC (RETROFIT)

LOG OF TEST BORINGS 2 of 10

REVISION DATES

SHEET 13 OF 21

ODS CIVIL LOG OF TEST BORINGS SHEET

FILE => 35-0244g-2-1tb02.dgn

USERNAME => trmikesl DATE PLOTTED => 20-JAN-2011 TIME PLOTTED => 12:14

BENCH MARK

SUHV109 (JK109)
Fnd 1" IP w/ PP+T
30.18 FT Rt. "RG" Line
N 2,012,566.46
E 6,028,219.51
Elev. = 404.54

(FOR BORING LOCATION SEE PLAN, LOTB SHEET 1 OF 10)

30' Rt Sta 185+50 RG Line

R08-04

386'

GWS EL. 378'
01-09-09
REC=100%
RQD=0%

Elev.	REC	RQD	Blows	Description
395				
390				
385	100%	0%		SANDY CLAY with GRAVEL (CL), stiff, grey, dry, 20% GRAVEL fine subrounded, 30% SAND medium nonplastic. (FILL)
	000%	000%		METAMORPHIC ROCK (Serpentine), yellow green to grey green, intensely weathered, soft, sheared, {very stiff, hard SANDY CLAY (CL), dry, nonplastic}.
380			62 1.4	METAMORPHIC ROCK (Argillite and Serpentine), grey green to black, intensely weathered, very soft, very intensely fractured to locally sheared, {CLAYEY SAND with GRAVEL (SC), fine gravel, medium dense}.
375			33 1.4	-friable, dry.
	100%	0%		
370				-moderately weathered, moderately soft.
	70%	0%		
365			40 1.4	METAMORPHIC ROCK (Argillite), grey to black, intensely weathered, moderately soft, very intensely fractured.
	63%	0%		-CALCITE veining.
360			>50 1.4	METAMORPHIC ROCK (Serpentine), yellow green to grey green, intensely weathered, soft, sheared, {very stiff to hard SANDY CLAY (CL), dry, nonplastic}.
	67%	0%		-12" fracture zone, moderately weathered, moderately hard.
355			>50 1.4	-intensely weathered, very soft. -moderately soft.
	67%	0%		-moderately weathered.
350			>50 1.4	
	33%	0%		
345				METAMORPHIC ROCK (Argillite and Serpentine), grey green to black, intensely weathered, very soft, very intensely fractured, sheared, (CLAYEY GRAVEL with SAND, fine gravel, medium dense).
	10%	0%		
340			66 1.4	METAMORPHIC ROCK (Argillite), grey to black, moderately weathered, moderately hard to hard, intensely fractured, locally sheared, shears contain SANDY CLAY with GRAVEL, hard, dry, some CALCITE veining.
	49%	0%		
335				
	50%	0%		
330			87/11" 1.4	METAMORPHIC ROCK (Serpentine), grey green, intensely weathered, very intensely fractured, sheared, shear zone is SANDY CLAY with GRAVEL, hard, dry, nonplastic.
	86%	0%		-with minor ARGILLITE.
325			65 1.5	
	57%	0%		METAMORPHIC ROCK (Argillite), black, moderately weathered, moderately hard, intensely fractured, locally sheared.
320			70/12" 1.4	-locally hard.
	51%	0%		
315			72/11" 1.4	-very intensely weathered, soft, very intensely fractured, sheared, shears contain SANDY CLAY with GARVEL, hard moist, moderate plasticity.
	57%	0%		
310			>50 1.4	-moderately soft to moderately hard.
	37%	0%		METAMORPHIC ROCK (Serpentine), grey green, intensely weathered, moderately soft to soft, very intensely fractured, locally sheared, shear zones contain SANDY CLAY, hard, dry.
305			78 1.4	
	46%	0%		
300			>50 1.4	-moderately hard.
	67%	0%		METAMORPHIC ROCK (Argillite), black, moderately weathered, moderately hard, intensely fractured.
295				12-17/18-09 Terminated at El 298' ER_i=87%

PROFILE

HOR. 1"=20'
VER. 1"=5'

185+00 186+00 187+00

ENGINEERING SERVICES

GEOTECHNICAL SERVICES

FUNCTIONAL SUPERVISOR
NAME: G. Wilcox

DRAWN BY: M. Reynolds 03/09
CHECKED BY: B. Price

FIELD INVESTIGATION BY:
C. Risden

ORIGINAL SCALE IN INCHES FOR REDUCED PLANS
0 1 2 3

STATE OF CALIFORNIA
DEPARTMENT OF TRANSPORTATION

DIVISION OF ENGINEERING SERVICES
OFFICE OF GEOTECHNICAL
DESIGN BRANCH

CU 04
EA 1A7701

BRIDGE NO. 35-0244G
POST MILES 10.2/10.7

DISREGARD PRINTS BEARING EARLIER REVISION DATES

N280/W92 CONNECTOR OC (RETROFIT)

LOG OF TEST BORINGS 3 of 10

REVISION DATES

SHEET 14 OF 21

REGISTERED GEOLOGIST
07-15-09
DATE

1-18-11
PLANS APPROVAL DATE

REGISTERED GEOLOGIST
Chris Risden
No. 7795
Exp. 9-30-09
STATE OF CALIFORNIA

The State of California or its officers or agents shall not be responsible for the accuracy or completeness of electronic copies of this plan sheet.

DIST	COUNTY	ROUTE	POST MILES TOTAL PROJECT	SHEET NO	TOTAL SHEETS
04	SM	280	10.7/11.0	56	83

ODS CIVIL LOG OF TEST BORINGS SHEET

FILE => 35-0244g-2-1tb03.dgn

USERNAME => trmnguye DATE PLOTTED => 20-JAN-2011 TIME PLOTTED => 10:52

DIST	COUNTY	ROUTE	POST MILES TOTAL PROJECT	SHEET No	TOTAL SHEETS
04	SM	280	10.7/11.0	57	83

REGISTERED GEOLOGIST — DATE 07-15-09

REGISTERED GEOLOGIST Chris Risden No. 7795 Exp. 9-30-09 STATE OF CALIFORNIA

1-18-11
PLANS APPROVAL DATE

The State of California or its officers or agents shall not be responsible for the accuracy or completeness of electronic copies of this plan sheet.

BENCH MARK
SUHV109 (JK109)
Fnd T" IP w/ PP+T
30.18 FT Rt. "RG" Line
N 2,012,566.46
E 6,028,219.51
Elev. = 404.54

(FOR BORING LOCATION SEE PLAN, LOTB SHEET 1 OF 10)

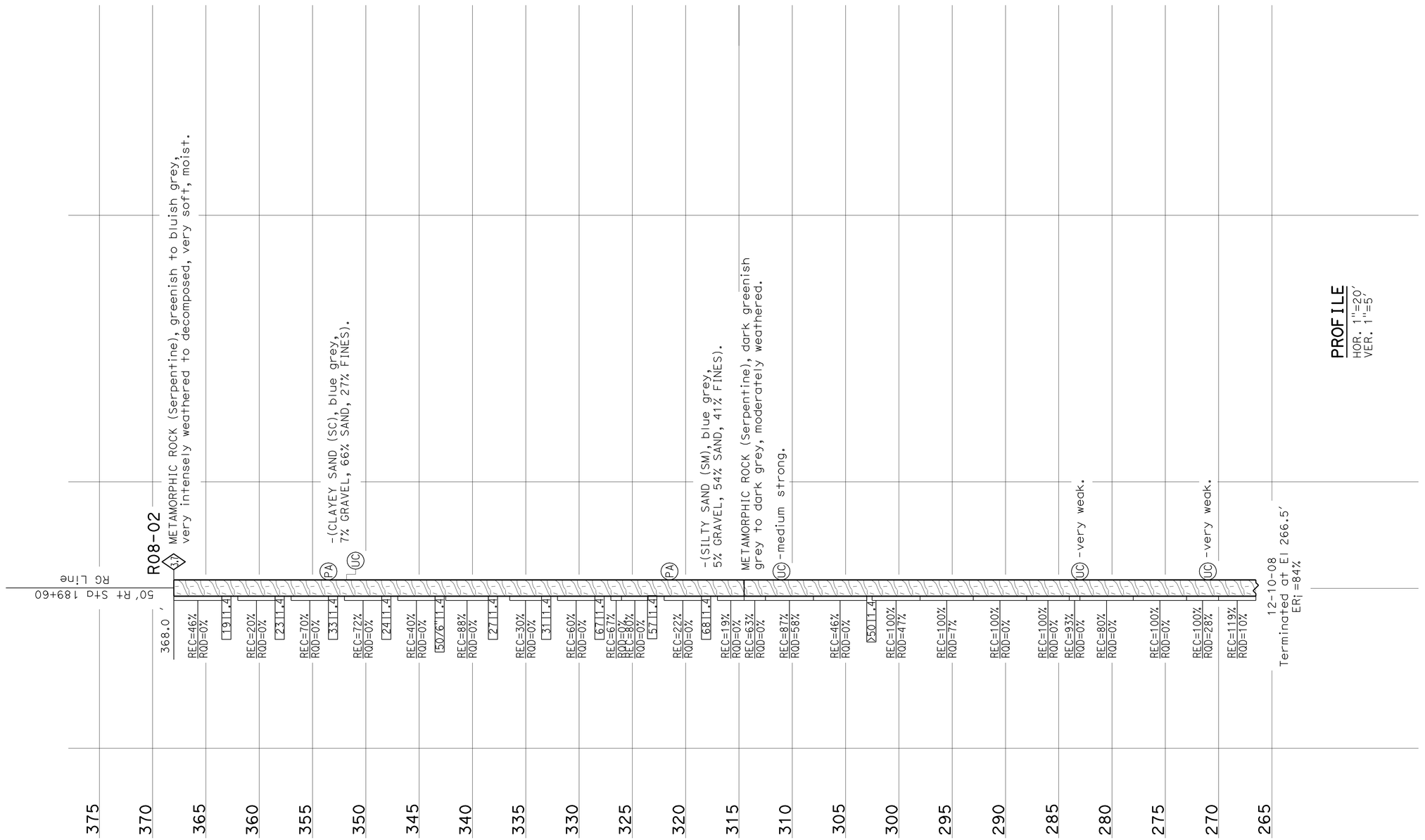

PROFILE
HOR. 1"=20'
VER. 1"=5'

ENGINEERING SERVICES	GEOTECHNICAL SERVICES	STATE OF CALIFORNIA DEPARTMENT OF TRANSPORTATION	DIVISION OF ENGINEERING SERVICES OFFICE OF GEOTECHNICAL DESIGN BRANCH	BRIDGE NO. 35-0244G	N280/W92 CONNECTOR OC (RETROFIT)
FUNCTIONAL SUPERVISOR	DRAWN BY: M. Reynolds 03/09	FIELD INVESTIGATION BY: J. Moore		POST MILES 10.2/10.7	LOG OF TEST BORINGS 4 of 10
NAME: G. Wilcox	CHECKED BY: B. Price				
OGS CIVIL LOG OF TEST BORINGS SHEET	ORIGINAL SCALE IN INCHES FOR REDUCED PLANS 0 1 2 3		CU 04 EA 1A7701	DISREGARD PRINTS BEARING EARLIER REVISION DATES →	REVISION DATES — SHEET 15 OF 21

FILE => 35-0244g-z-1tb04.dgn

USERNAME => trmguye DATE PLOTTED => 20-JAN-2011 TIME PLOTTED => 10:53

BENCH MARK

SUHV109 (JK109)
Fnd 1" IP w/ PP+T
30.18 FT Rt. "RG" Line
N 2,012,566.46
E 6,028,219.51
Elev. = 404.54

(FOR BORING LOCATION SEE PLAN, LOTB SHEET 1 OF 10)

0' Lt Sta 194+25 RG Line

R09-06

407'

3.7 Sandy CLAY with GRAVEL (CL), stiff, brown, wet, moderate plasticity.

ASPHALT

REC=100% RQD=100% METAMORPHIC ROCK (Serpentine), dark green, hard, slightly weathered, slightly fractured.

REC=10% RQD=0%

-grey green to brown, intensely weathered, soft, very intensely fractured, sheared, CLAYEY SAND or CLAYEY GRAVEL with SAND, stiff, moist, nonplastic).

25 | 1.4

REC=43% RQD=0% -fracture zone, 2" thick angular fragments of ARGILLITE, black, moderately weathered, moderately soft.

38 | 1.4

GWS EL. 390' 01-09-09

-4" fracture zone.

REC=17% RQD=0%

11 | 1.4 PA PI -decomposed, soft, very intensely fractured, (SILTY SAND, firm, grey green brown, moist, 5% GRAVEL, 70% SAND, 25% FINES, nonplastic).

No recovery.

REC=0% RQD=NR*

14 | 1.4 PA PI -olive green, (SILTY SAND, firm, grey green brown, moist, 5% GRAVEL, 70% SAND, 25% FINES, nonplastic).

METAMORPHIC ROCK (Argillite and Serpentine), olive green to black, moderately to intensely weathered, moderately soft, very intensely fractured.

REC=14% RQD=0%

16 | 1.4 PA PI -very intensely weathered, (CLAYEY SAND, grey, 5% GRAVEL, 45% SAND, 50% FINES), moderate plasticity.

REC=29% RQD=0% METAMORPHIC ROCK (Serpentine), blue green, intensely weathered, soft, sheared.

50/5" | 1.4 -moderately weathered, moderately soft, very intensely fractured, sheared.

REC=12% RQD=0%

24 | 1.4 METAMORPHIC ROCK (Graywacke), olive green, slightly weathered, hard, intensely fractured.

REC=0% RQD=NR* No recovery.

35 | 1.5 METAMORPHIC ROCK (Serpentine/ Metagraywacke), weathered, hard, intensely fractured, rust colored areas, foliated structure, ovoid black spots.

REC=57% RQD=0% METAMORPHIC ROCK (Serpentine and Argillite), blue green to grey, very intensely weathered, very soft, very intensely fractured, very intensely weathered, (CLAY with SAND, very stiff, dry).

20 | 1.4

REC=0% RQD=0% METAMORPHIC ROCK (Serpentine), blue green to grey, very intensely weathered, very soft, very intensely fractured, very intensely weathered, (CLAY with SAND, very stiff, dry).

86/11" | 1.4 REC=67% RQD=NR* No recovery.

REC=127% RQD=0% UC

23 | 1.4 METAMORPHIC ROCK (Serpentine and Argillite), grey to light blue green, very intensely weathered, soft to very soft, very intensely fractured, extremely weak, (SILTY CLAY, very stiff, dry, slight plasticity).

REC=76% RQD=0%

26 | 1.4

REC=90% RQD=0% UC -extremely weak.

27 | 1.4 METAMORPHIC ROCK (Argillite), dark grey, slightly weathered, moderately hard, moderately fractured.

REC=24% RQD=10%

55 | 1.4 METAMORPHIC ROCK (Serpentine and Argillite), grey to light blue green, very intensely weathered, soft to very soft, very intensely fractured, (SILTY CLAY, very stiff, dry, slight plasticity).

REC=126% RQD=NR* UC -extremely weak.

33 | 1.5

REC=57% RQD=0% -light green blue to grey, very soft, (CLAY with SAND, very stiff, grey to olive green, dry, hard, low plasticity).

32 | 1.4 -intensely weathered.

REC=95% RQD=0% -moderately weathered, soft, sheared, extremely weak. UC

55 | 1.4 -slightly weathered.

REC=127% RQD=0%

50/5" | 1.4

REC=150% RQD=0% -intensely weathered.

REC=139% RQD=NR*

88/11" | 1.4

REC=NR* RQD=NR*

REC=NR* RQD=0% REC=100% RQD=0%

REC=100% RQD=0%

REC=71% RQD=0%

REC=50% RQD=0%

50 | 1.4 METAMORPHIC ROCK (Serpentine), dark green to black, moderately soft, sheared, moderately weathered.

REC=67% RQD=NR* -very intensely weathered, very soft.

REC=83% RQD=NR*

01-06-09
Terminated at El 287'
ER¡=83%

415 410 405 400 395 390 385 380 375 370 365 360 355 350 345 340 335 330 325 320 315 310 305 300 295 290 285

194+00 195+00 196+00

PROFILE

HOR. 1"=20'
VER. 1"=5'

NOTE:
*NR: Not Recorded.

REGISTERED GEOLOGIST 07-15-09 DATE

1-18-11
PLANS APPROVAL DATE

REGISTERED GEOLOGIST Chris Risden No. 7795 Exp 9-30-09 STATE OF CALIFORNIA

The State of California or its officers or agents shall not be responsible for the accuracy or completeness of electronic copies of this plan sheet.

DIST	COUNTY	ROUTE	POST MILES TOTAL PROJECT	SHEET NO	TOTAL SHEETS
04	SM	280	10.7/11.0	58	83

ENGINEERING SERVICES

GEOTECHNICAL SERVICES

FUNCTIONAL SUPERVISOR
NAME: G. Wilcox

DRAWN BY: M. Reynolds 03/09
CHECKED BY: B. Price

FIELD INVESTIGATION BY:
C. Risden

ORIGINAL SCALE IN INCHES FOR REDUCED PLANS 0 1 2 3

STATE OF CALIFORNIA
DEPARTMENT OF TRANSPORTATION

DIVISION OF ENGINEERING SERVICES
OFFICE OF GEOTECHNICAL
DESIGN BRANCH

CU 04
EA 1A7701

BRIDGE NO. 35-0244G
POST MILES 10.2/10.7

DISREGARD PRINTS BEARING EARLIER REVISION DATES

N280/W92 CONNECTOR OC (RETROFIT)

LOG OF TEST BORINGS 5 of 10

REVISION DATES

SHEET 16 OF 21

OGS CIVIL LOG OF TEST BORINGS SHEET

FILE => 35-0244g-2-1tb05.dgn

USERNAME => trmnguye DATE PLOTTED => 20-JAN-2011 TIME PLOTTED => 10:53

DIST	COUNTY	ROUTE	POST MILES TOTAL PROJECT	SHEET No	TOTAL SHEETS
04	SM	280	10.7/11.0	59	83

REGISTERED GEOLOGIST — DATE 07-15-09

1-18-11
PLANS APPROVAL DATE

REGISTERED GEOLOGIST Chris Risden No. 7795 Exp. 9-30-09 STATE OF CALIFORNIA

The State of California or its officers or agents shall not be responsible for the accuracy or completeness of electronic copies of this plan sheet.

REFERENCE: CALTRANS SOIL & ROCK LOGGING, CLASSIFICATION, AND PRESENTATION MANUAL (JUNE 2007)

CEMENTATION

Description	Criteria
Weak	Crumbles or breaks with handling or little finger pressure.
Moderate	Crumbles or breaks with considerable finger pressure.
Strong	Will not crumble or break with finger pressure.

CONSISTENCY OF COHESIVE SOILS

Description	Unconfined Compressive Strength (tsf)	Pocket Penetrometer Measurement (tsf)	Torvane Measurement (tsf)	Field Approximation
Very Soft	< 0.25	< 0.25	< 0.12	Easily penetrated several inches by fist
Soft	0.25 to 0.50	0.25 to 0.50	0.12 to 0.25	Easily penetrated several inches by thumb
Medium Stiff	0.50 to 1.0	0.50 to 1.0	0.25 to 0.50	Penetrated several inches by thumb with moderate effort
Stiff	1 to 2	1 to 2	0.50 to 1.0	Readily indented by thumb but penetrated only with great effort
Very Stiff	2 to 4	2 to 4	1.0 to 2.0	Readily indented by thumbnail
Hard	> 4.0	> 4.0	> 2.0	Indented by thumbnail with difficulty

BOREHOLE IDENTIFICATION

Symbol	Hole Type	Description
Size	A	Auger Boring
Size	R P	Rotary drilled boring Rotary percussion boring (air)
Size	R	Rotary drilled diamond core
Size	HD HA	Hand driven (1-inch soil tube) Hand Auger
●	D	Dynamic Cone Penetration Boring
▲	CPT	Cone Penetration Test (ASTM D 5778-95)
⬚	O	Other

Note: Size in inches.

PLASTICITY OF FINE-GRAINED SOILS

Description	Criteria
Nonplastic	A 1/8-inch thread cannot be rolled at any water content.
Low	The thread can barely be rolled and the lump cannot be formed when drier than the plastic limit.
Medium	The thread is easy to roll and not much time is required to reach the plastic limit. The thread cannot be rerolled after reaching the plastic limit. The lump crumbles when drier than the plastic limit.
High	It takes considerable time rolling and kneading to reach the plastic limit. The thread can be rerolled several times after reaching the plastic limit. The lump can be formed without crumbling when drier than the plastic limit.

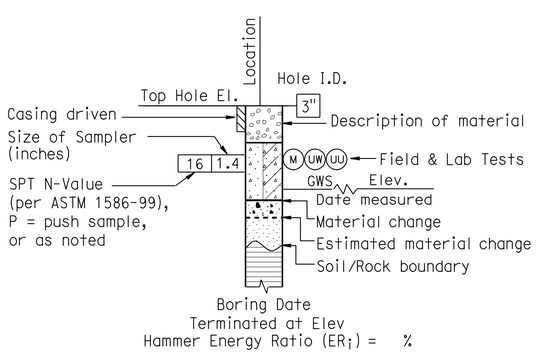

ROTARY BORING

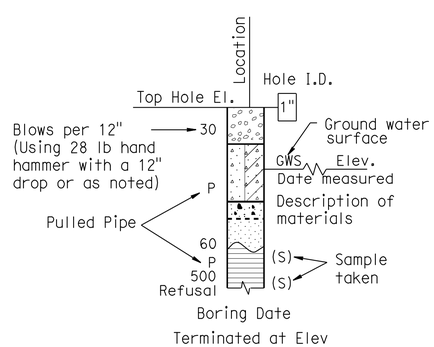

HAND BORING

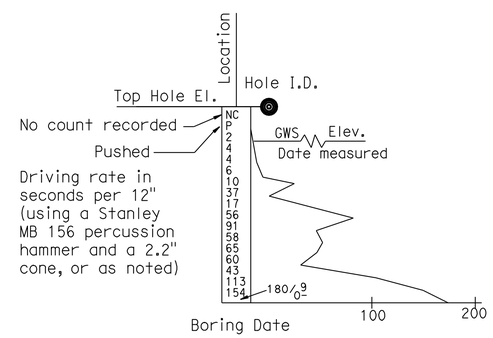

DYNAMIC CONE PENETRATION BORING

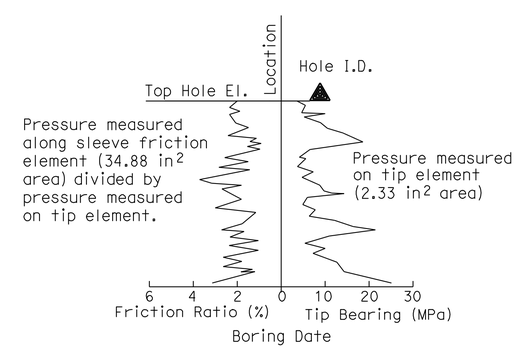

CONE PENETRATION TEST (CPT) SOUNDING

ENGINEERING SERVICES			GEOTECHNICAL SERVICES	STATE OF CALIFORNIA DEPARTMENT OF TRANSPORTATION	DIVISION OF ENGINEERING SERVICES OFFICE OF GEOTECHNICAL DESIGN BRANCH	BRIDGE NO. 35-0244G	SOIL LEGEND
FUNCTIONAL SUPERVISOR	PREPARED BY M. Reynolds	03/09				POST MILE 10.2/10.7	LOG OF TEST BORINGS 6 of 10
NAME: G. Wilcox	CHECKED BY C. Risden		C. Risden				

GS LOTB SOIL LEGEND

ORIGINAL SCALE IN INCHES FOR REDUCED PLANS 0 1 2 3

CU 04
EA 1A7701

DISREGARD PRINTS BEARING EARLIER REVISION DATES

REVISION DATES

SHEET 17 OF 21

FILE => 35-0244g-z-ltb06.dgn

USERNAME => ttrmguye DATE PLOTTED => 20-JAN-2011 TIME PLOTTED => 10:53

REFERENCE: CALTRANS SOIL & ROCK LOGGING, CLASSIFICATION, AND PRESENTATION MANUAL (JUNE 2007)

DIST	COUNTY	ROUTE	POST MILES TOTAL PROJECT	SHEET No	TOTAL SHEETS
04	SM	280	10.7/11.0	60	83

REGISTERED GEOLOGIST — DATE 07-15-09

1-18-11
PLANS APPROVAL DATE

REGISTERED GEOLOGIST Chris Risden No. 7795 Exp. 9-30-09 STATE OF CALIFORNIA

The State of California or its officers or agents shall not be responsible for the accuracy or completeness of electronic copies of this plan sheet.

GROUP SYMBOLS AND NAMES

Graphic/Symbol	Group Names	Graphic/Symbol	Group Names
GW	Well-graded GRAVEL Well-graded GRAVEL with SAND	CL	Lean CLAY Lean CLAY with SAND Lean CLAY with GRAVEL SANDY lean CLAY SANDY lean CLAY with GRAVEL GRAVELLY lean CLAY GRAVELLY lean CLAY with SAND
GP	Poorly graded GRAVEL Poorly graded GRAVEL with SAND		
GW-GM	Well-graded GRAVEL with SILT Well-graded GRAVEL with SILT and SAND	CL-ML	SILTY CLAY SILTY CLAY with SAND SILTY CLAY with GRAVEL SANDY SILTY CLAY SANDY SILTY CLAY with GRAVEL GRAVELLY SILTY CLAY GRAVELLY SILTY CLAY with SAND
GW-GC	Well-graded GRAVEL with CLAY (or SILTY CLAY) Well-graded GRAVEL with CLAY and SAND (or SILTY CLAY and SAND)		
GP-GM	Poorly graded GRAVEL with SILT Poorly graded GRAVEL with SILT and SAND	ML	SILT SILT with SAND SILT with GRAVEL SANDY SILT SANDY SILT with GRAVEL GRAVELLY SILT GRAVELLY SILT with SAND
GP-GC	Poorly graded GRAVEL with CLAY (or SILTY CLAY) Poorly graded GRAVEL with CLAY and SAND (or SILTY CLAY and SAND)		
GM	SILTY GRAVEL SILTY GRAVEL with SAND	OL	ORGANIC lean CLAY ORGANIC lean CLAY with SAND ORGANIC lean CLAY with GRAVEL SANDY ORGANIC lean CLAY SANDY ORGANIC lean CLAY with GRAVEL GRAVELLY ORGANIC lean CLAY GRAVELLY ORGANIC lean CLAY with SAND
GC	CLAYEY GRAVEL CLAYEY GRAVEL with SAND		
GC-GM	SILTY, CLAYEY GRAVEL SILTY, CLAYEY GRAVEL with SAND	OL	ORGANIC SILT ORGANIC SILT with SAND ORGANIC SILT with GRAVEL SANDY ORGANIC SILT SANDY ORGANIC SILT with GRAVEL GRAVELLY ORGANIC SILT GRAVELLY ORGANIC SILT with SAND
SW	Well-graded SAND Well-graded SAND with GRAVEL		
SP	Poorly graded SAND Poorly graded SAND with GRAVEL	CH	Fat CLAY Fat CLAY with SAND Fat CLAY with GRAVEL SANDY fat CLAY SANDY fat CLAY with GRAVEL GRAVELLY fat CLAY GRAVELLY fat CLAY with SAND
SW-SM	Well-graded SAND with SILT Well-graded SAND with SILT and GRAVEL		
SW-SC	Well-graded SAND with CLAY (or SILTY CLAY) Well-graded SAND with CLAY and GRAVEL (or SILTY CLAY and GRAVEL)	MH	Elastic SILT Elastic SILT with SAND Elastic SILT with GRAVEL SANDY elastic SILT SANDY elastic SILT with GRAVEL GRAVELLY elastic SILT GRAVELLY elastic SILT with SAND
SP-SM	Poorly graded SAND with SILT Poorly graded SAND with SILT and GRAVEL		
SP-SC	Poorly graded SAND with CLAY (or SILTY CLAY) Poorly graded SAND with CLAY and GRAVEL (or SILTY CLAY and GRAVEL)	OH	ORGANIC fat CLAY ORGANIC fat CLAY with SAND ORGANIC fat CLAY with GRAVEL SANDY ORGANIC fat CLAY SANDY ORGANIC fat CLAY with GRAVEL GRAVELLY ORGANIC fat CLAY GRAVELLY ORGANIC fat CLAY with SAND
SM	SILTY SAND SILTY SAND with GRAVEL		
SC	CLAYEY SAND CLAYEY SAND with GRAVEL	OH	ORGANIC elastic SILT ORGANIC elastic SILT with SAND ORGANIC elastic SILT with GRAVEL SANDY ORGANIC elastic SILT SANDY ORGANIC elastic SILT with GRAVEL GRAVELLY ORGANIC elastic SILT GRAVELLY ORGANIC elastic SILT with SAND
SC-SM	SILTY, CLAYEY SAND SILTY, CLAYEY SAND with GRAVEL		
PT	PEAT	OL/OH	ORGANIC SOIL ORGANIC SOIL with SAND ORGANIC SOIL with GRAVEL SANDY ORGANIC SOIL SANDY ORGANIC SOIL with GRAVEL GRAVELLY ORGANIC SOIL GRAVELLY ORGANIC SOIL with SAND
	COBBLES COBBLES and BOULDERS BOULDERS		

FIELD AND LABORATORY TESTING

- (C) Consolidation (ASTM D 2435)
- (CL) Collapse Potential (ASTM D 5333)
- (CP) Compaction Curve (CTM 216)
- (CR) Corrosivity Testing (CTM 643, CTM 422, CTM 417)
- (CU) Consolidated Undrained Triaxial (ASTM D 4767)
- (DS) Direct Shear (ASTM D 3080)
- (EI) Expansion Index (ASTM D 4829)
- (M) Moisture Content (ASTM D 2216)
- (OC) Organic Content-% (ASTM D 2974)
- (P) Permeability (CTM 220)
- (PA) Particle Size Analysis (ASTM D 422)
- (PI) Plasticity Index (AASHTO T 90) Liquid Limit (AASHTO T 89)
- (PL) Point Load Index (ASTM D 5731)
- (PM) Pressure Meter
- (PP) Pocket Penetrometer
- (R) R-Value (CTM 301)
- (SE) Sand Equivalent (CTM 217)
- (SG) Specific Gravity (AASHTO T 100)
- (SL) Shrinkage Limit (ASTM D 427)
- (SW) Swell Potential (ASTM D 4546)
- (TV) Pocket Torvane
- (UC) Unconfined Compression-Soil (ASTM D 2166) Unconfined Compression-Rock (ASTM D 2938)
- (UU) Unconsolidated Undrained Triaxial (ASTM D 2850)
- (UW) Unit Weight (ASTM D 4767)
- (VS) Vane Shear (AASHTO T 223)

APPARENT DENSITY OF COHESIONLESS SOILS

Description	SPT N_{60} (Blows / 12 inches)
Very loose	0 - 4
Loose	5 - 10
Medium Dense	11 - 30
Dense	31 - 50
Very Dense	> 50

MOISTURE

Description	Criteria
Dry	Absence of moisture, dusty, dry to the touch
Moist	Damp but no visible water
Wet	Visible free water, usually soil is below water table

PERCENT OR PROPORTION OF SOILS

Description	Criteria
Trace	Particles are present but estimated to be less than 5%
Few	5 to 10%
Little	15 to 25%
Some	30 to 45%
Mostly	50 to 100%

PARTICLE SIZE

Description		Size
Boulder		> 12"
Cobble		3" to 12"
Gravel	Coarse	3/4" to 3"
	Fine	No. 4 to 3/4"
Sand	Coarse	No. 10 to No. 4
	Medium	No. 40 to No. 10
	Fine	No. 200 to No. 40

ENGINEERING SERVICES			GEOTECHNICAL SERVICES
FUNCTIONAL SUPERVISOR	PREPARED BY	M. Reynolds 03/09	
NAME: G. Wilcox	CHECKED BY	C. Risden	C. Risden

STATE OF CALIFORNIA DEPARTMENT OF TRANSPORTATION

DIVISION OF ENGINEERING SERVICES OFFICE OF GEOTECHNICAL DESIGN BRANCH

BRIDGE NO. 35-0244G
POST MILE 10.2/10.7

SOIL LEGEND
LOG OF TEST BORINGS 7 of 10

GS LOTB SOIL LEGEND

ORIGINAL SCALE IN INCHES FOR REDUCED PLANS 0 1 2 3

CU 04
EA 1A7701

DISREGARD PRINTS BEARING EARLIER REVISION DATES

REVISION DATES

SHEET 18 OF 21

FILE => 35-0244g-z-1tb07.dgn

USERNAME => trmrguye DATE PLOTTED => 20-JAN-2011 TIME PLOTTED => 10:53

REFERENCE: CALTRANS SOIL & ROCK LOGGING, CLASSIFICATION, AND PRESENTATION MANUAL (JUNE 2007)

DIST	COUNTY	ROUTE	POST MILES TOTAL PROJECT	SHEET No	TOTAL SHEETS
04	SM	280	10.7/11.0	61	83

REGISTERED GEOLOGIST — DATE 07-15-09

1-18-11
PLANS APPROVAL DATE

REGISTERED GEOLOGIST Chris Risden No. 7795 Exp. 9-30-09 STATE OF CALIFORNIA

The State of California or its officers or agents shall not be responsible for the accuracy or completeness of electronic copies of this plan sheet.

PERCENT CORE RECOVERY (REC) & ROCK QUALITY DESIGNATION (RQD)

$$REC = \frac{\sum \text{Length of the recovered core pieces (inches)}}{\text{Total length of core run (inches)}} \times 100\%$$

$$RQD = \frac{\sum \text{Length of intact core pieces} \geq 4''}{\text{Total length of core run (inches)}} \times 100\%$$

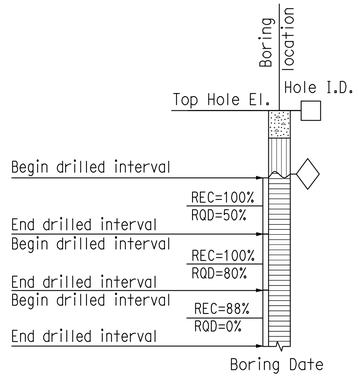

RELATIVE STRENGTH OF INTACT ROCK

Term	Uniaxial Compressive Strength (PSI)
Extremely Strong	> 30,000
Very Strong	14,500 - 30,000
Strong	7,000 - 14,500
Medium Strong	3,500 - 7,000
Weak	700 - 3,500
Very Weak	150 - 700
Extremely Weak	< 150

BEDDING SPACING

Description	Thickness / Spacing
Massive	Greater than 10 ft
Very thickly bedded	3 to 10 ft
Thickly bedded	1 to 3 ft
Moderately bedded	3-5/8" to 1 ft
Thinly bedded	1-1/4" to 3-5/8"
Very thinly bedded	3/8" to 1-1/4"
Laminated	Less than 3/8"

LEGEND OF ROCK MATERIALS

- IGNEOUS ROCK
- SEDIMENTARY ROCK
- METAMORPHIC ROCK

ROCK HARDNESS

Description	Criteria
Extremely Hard	Specimen cannot be scratched with a pocket knife or sharp pick; can only be chipped with repeated heavy hammer blows.
Very Hard	Specimen cannot be scratched with a pocket knife or sharp pick. Breaks with repeated heavy hammer blows.
Hard	Specimen can be scratched with a pocket knife or sharp pick with difficulty (heavy pressure). Heavy hammer blows required to break specimen.
Moderately Hard	Specimen can be scratched with pocket knife or sharp pick with light or moderate pressure. Core breaks with moderate hammer pressure.
Moderately Soft	Specimen can be grooved 1/6" deep with a pocket knife or sharp pick with moderate or heavy pressure. Breaks with light hammer blow or heavy manual pressure.
Soft	Specimen can be grooved or gouged easily by a pocket knife or sharp pick with light pressure, can be scratched with fingernail. Breaks with light to moderate manual pressure.
Very Soft	Specimen can be readily indented, grooved or gouged with fingernail, or carved with a pocket knife. Breaks with light manual pressure.

FRACTURE DENSITY

Description	Observed Fracture Density
Unfractured	No fractures.
Very slightly fractured	Lengths greater than 3 feet.
Slightly fractured	Lengths from 1 to 3 feet with few lengths less than 1 foot or greater than 3 feet.
Moderately fractured	Lengths mostly in 4" to 1 foot range with most lengths about 8"
Intensely fractured	Lengths average from 1 to 4" with scattered fragmented intervals with lengths less than 4"
Very intensely fractured	Mostly chips and fragments with a few scattered short core lengths.

Combination descriptors (such as "Very intensely to intensely fractured") are used where equal distribution of both fracture density characteristics is present over a significant interval or exposure, or where characteristics are "in between" the descriptor definitions. Only two adjacent descriptors may be combined.

WEATHERING DESCRIPTORS FOR INTACT ROCK

Description	Diagnostic features					General Characteristics
	Chemical Weathering-Discoloration and/or oxidation		Mechanical Weathering-Grain boundary conditions (disaggregation) primarily for granitics and some coarse-grained sediments	Texture and Solutioning		
	Body of Rock	Fracture Surfaces		Texture	Solutioning	
Fresh	No discoloration, not oxidized.	No discoloration or oxidation.	No separation, intact (tight).	No change.	No solutioning.	Hammer rings when crystalline rocks are struck.
Slightly Weathered	Discoloration or oxidation is limited to surface of, or short distance from, fractures; some feldspar crystals are dull.	Minor to complete discoloration or oxidation of most surfaces.	No visible separation, intact (tight).	Preserved.	Minor leaching of some soluble minerals may be noted.	Hammer rings when crystalline rocks are struck. Body of rock not weakened.
Moderately Weathered	Discoloration or oxidation extends from fractures usually throughout; Fe-Mg minerals are "rusty," feldspar crystals are "cloudy."	All fracture surfaces are discolored or oxidized.	Partial separation of boundaries visible.	Generally preserved.	Soluble minerals may be mostly leached.	Hammer does not ring when rock is struck. Body of rock is slightly weakened.
Intensely Weathered	Discoloration or oxidation throughout; all feldspars and Fe-Mg minerals are altered to clay to some extent; or chemical alteration produces in-situ disaggregation, see grain boundary conditions.	All fracture surfaces are discolored or oxidized, surfaces friable.	Partial separation, rock is friable; in semiarid conditions granitics are disaggregated.	Texture altered by chemical disintegration (hydration, argillation).	Leaching of soluble minerals may be complete.	Dull sound when struck with hammer, usually can be broken with moderate to heavy manual pressure or by light hammer blow without reference to planes of weakness such as incipient or hairline fractures, or veinlets. Rock is significantly weakened.
Decomposed	Discolored or oxidized throughout, but resistant minerals such as quartz may be unaltered; all feldspars and Fe-Mg minerals are completely altered to clay.		Complete separation of grain boundaries (disaggregated).	Resembles a soil, partial or complete remnant rock structure may be preserved; leaching of soluble minerals usually complete.		Can be granulated by hand. Resistant minerals such as quartz may be present as "stringers" or "dikes."

Combination descriptors (such as "slightly weathered to fresh") are permissible where equal distribution of both weathering characteristics is present over significant intervals or where characteristics present are "in between" the diagnostic feature. However, combination descriptors should not be used where significant, identifiable zones can be delineated. Only two adjacent descriptors may be combined. "Very intensely weathered" is the combination descriptor for "intensely weathered to decomposed."

ENGINEERING SERVICES			GEOTECHNICAL SERVICES
FUNCTIONAL SUPERVISOR	PREPARED BY	M. Reynolds 03/09	FIELD INVESTIGATION BY:
NAME: G. Wilcox	CHECKED BY	C. Risden	C. Risden

STATE OF CALIFORNIA DEPARTMENT OF TRANSPORTATION

DIVISION OF ENGINEERING SERVICES OFFICE OF GEOTECHNICAL DESIGN BRANCH

BRIDGE NO. 35-0244G
POST MILE 10.2/10.7

ROCK LEGEND
LOG OF TEST BORINGS 8 of 10

GS LOTB ROCK LEGEND

ORIGINAL SCALE IN INCHES FOR REDUCED PLANS 0 1 2 3

CU 04
EA 1A7701

DISREGARD PRINTS BEARING EARLIER REVISION DATES

REVISION DATES

SHEET 19 OF 21

FILE => 35-0244g-z-1tb08.dgn

USERNAME => trmguye DATE PLOTTED => 20-JAN-2011 TIME PLOTTED => 10:53

DIST.	COUNTY	ROUTE	POST MILES—TOTAL PROJECT	SHEET No.	TOTAL SHEETS
04	SM	280,92,R27,R27,T69/R77		172	216

REGISTERED CIVIL ENGINEER NO. 10704

DATE APPROVED September 17, 1971

NOTE: Classification of earth material as shown on this sheet is based upon field inspection and is not to be construed to imply mechanical analysis.

FIELD STUDY	By W.T. Nelson 6-70
DRAWN	By S. Kawamura 7-16-70
CHECKED	By W.T. Nelson 8-26-70

Approval Recommended by: Engineering Geologist

BRIDGE DEPARTMENT
ENGINEERING GEOLOGY SECTION

GEOTECHNICAL SERVICES-DIVISION OF ENGINEERING SERVICES

As-Built Log of Test Borings sheet is considered an informational document only. As such, the State of California registration seal with signature, license number and registration certificate expiration date confirm that this is a true and accurate copy of the original document. It does not attest to the accuracy or validity of the information contained in the original cocument. This drawing is available and presented only for the convenience of any bidder, contractor or other interested party.

DIST.	COUNTY	ROUTE	POST MILES-TOTAL PROJECT	SHEET NO.	TOTAL SHEETS
04	SM	280	10.7/11.0	62	83

REGISTERED GEOLOGIST — DATE 07-15-09

REGISTERED GEOLOGIST Chris Risden No. 7795 Exp. 9-30-09 STATE OF CALIFORNIA

N280/ W92 CONNECTOR OC (RETROFIT)

LOG OF TEST BORINGS 9 OF 10

NOTE: A COPY OF THIS LOG OF TEST BORINGS IS AVAILABLE AT OFFICE OF STRUCTURE MAINTENANCE AND INVESTIGATIONS, SACRAMENTO, CALIFORNIA.

CU: 04
EA: 1A7701

BRIDGE NO. 35-0244G

Sheet 20 of 21

TO ACCOMPANY PLANS DATED 1-18-11

AS BUILT
CORRECTIONS BY
CONTRACT NO.
DATE

STATE OF CALIFORNIA
TRANSPORTATION AGENCY
DEPARTMENT OF PUBLIC WORKS
DIVISION OF HIGHWAYS

ROUTE 35 CONNECTOR OVERCROSSING

LOG OF TEST BORINGS

BRIDGE NO.	POST MILE	DRAWING NO.	SHEET	OF
35-244	10.9		15	16

Disregard prints bearing earlier revision dates ⟶ REVISION DATES (PRELIMINARY STAGE ONLY) 7/16/70

AS BUILT PLANS
Contract No. 04-419264
Date Completed 09-71
Document No. 40006425

WO 419261
CU 042c9

I HEREBY CERTIFY THAT THIS IS A TRUE AND ACCURATE COPY OF THE ABOVE DOCUMENT TAKEN UNDER MY DIRECTION AND CONTROL ON THIS DATE IN SACRAMENTO, CALIFORNIA PURSUANT TO AUTHORIZATION BY THE DIRECTOR OF TRANSPORTATION.

FILENAME => 35-0244g-z-ltb09.tif

DIST.	COUNTY	ROUTE	POST MILES—TOTAL PROJECT	SHEET NO.	TOTAL SHEETS
04	SM	280	9.8/12.7, 16.8/27.7	173	215

DESIGN SECTION SUPERVISOR — REGISTERED CIVIL ENGINEER NO. 10104
DATE APPROVED September 13, 1971

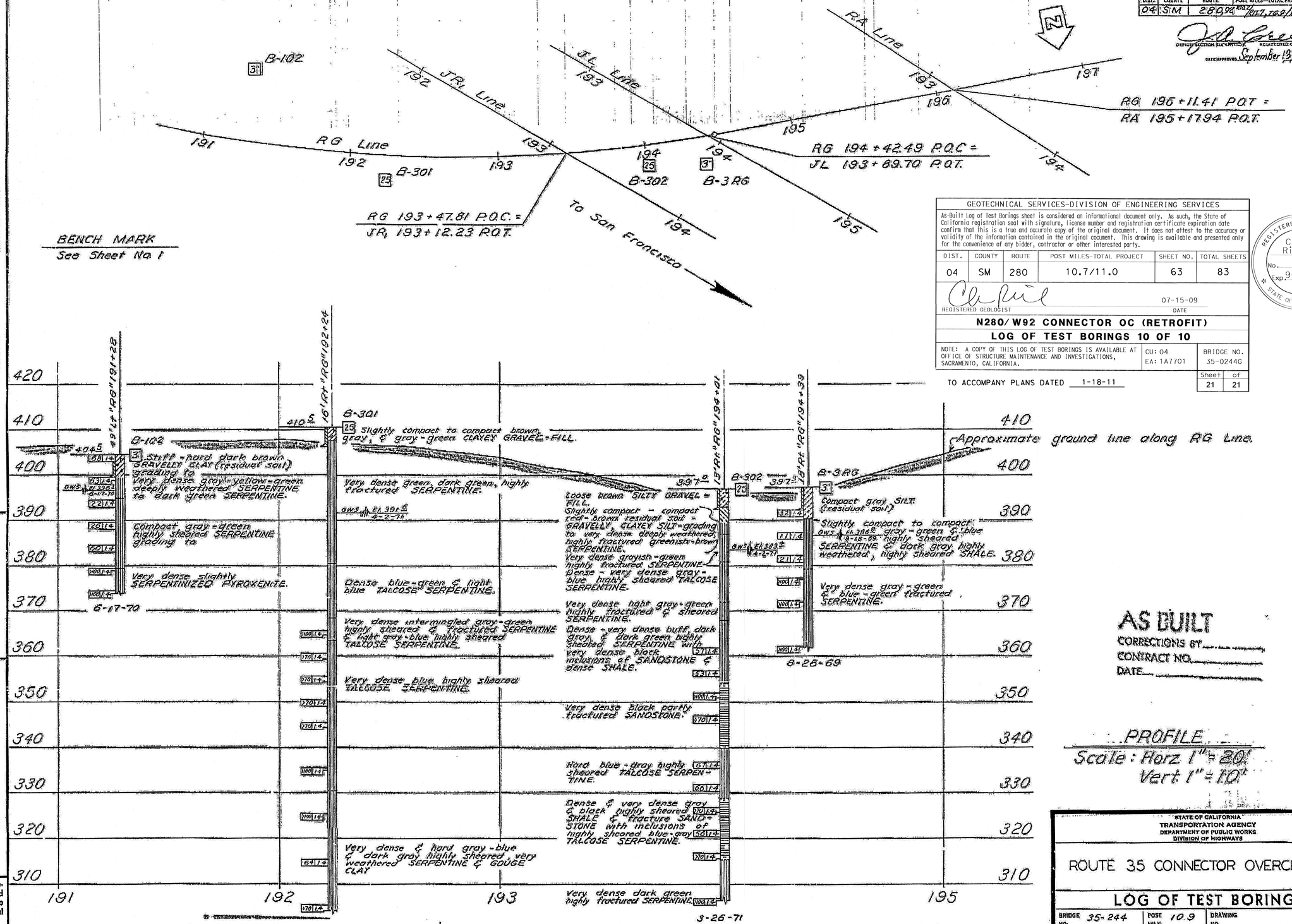

GEOTECHNICAL SERVICES-DIVISION OF ENGINEERING SERVICES

As-Built Log of Test Borings sheet is considered an informational document only. As such, the State of California registration seal with signature, license number and registration certificate expiration date confirm that this is a true and accurate copy of the original document. It does not attest to the accuracy or validity of the information contained in the original document. This drawing is available and presented only for the convenience of any bidder, contractor or other interested party.

DIST.	COUNTY	ROUTE	POST MILES-TOTAL PROJECT	SHEET NO.	TOTAL SHEETS
04	SM	280	10.7/11.0	63	83

REGISTERED GEOLOGIST — DATE 07-15-09

REGISTERED GEOLOGIST Chris Risden No. 7795 Exp. 9-30-09 STATE OF CALIFORNIA

N280/W92 CONNECTOR OC (RETROFIT)

LOG OF TEST BORINGS 10 OF 10

NOTE: A COPY OF THIS LOG OF TEST BORINGS IS AVAILABLE AT OFFICE OF STRUCTURE MAINTENANCE AND INVESTIGATIONS, SACRAMENTO, CALIFORNIA.

CU: 04 EA: 1A7701

BRIDGE NO. 35-0244G

TO ACCOMPANY PLANS DATED 1-18-11

Sheet 21 of 21

AS BUILT
CORRECTIONS BY
CONTRACT NO.
DATE

PROFILE
Scale: Horz. 1" = 20'
Vert. 1" = 10'

STATE OF CALIFORNIA
TRANSPORTATION AGENCY
DEPARTMENT OF PUBLIC WORKS
DIVISION OF HIGHWAYS

ROUTE 35 CONNECTOR OVERCROSSING

LOG OF TEST BORINGS 2 of 2

BRIDGE NO.	POST MILE	DRAWING NO.	SHEET	OF
35-244	10.9		16	16

REVISION DATES (PRELIMINARY STAGE ONLY)

Disregard prints bearing earlier revision dates

WO 419261
CU 04209

FILENAME => 35-0244g-z-ltb10.tif

LEGEND OF BORING OPERATIONS

Penetrometer; 2½" Core Penetrometer; Sampler Boring (Dry); Rotary Boring (Wet); Auger Boring (Dry); Jet Boring; Core Boring; Test Pit

Penetration Boring; Rotary Boring; 1" Soil Tube

LEGEND OF EARTH MATERIALS

Gravel; Sand; Silt; Clay; Sandy Clay or Clayey Sand; Sandy Silt or Silty Sand; Silty Clay or Clayey Silt; Peat and Organic Matter; Fill Material; Igneous Rock; Sedimentary Rock; Metamorphic Rock

CLASSIFICATION OF MATERIAL BASED ON STANDARD GRADE SIZE LIMITS

Diagram showing the basis for estimates of grain size distribution used in determination of class names. Boundaries are approximate. Adjusting the term "Gravelly" may be added to the class name, viz. "Gravelly Sandy Silt". The terms "Gravel", "Sand", "Silt", "Clay" refer to specific sand, silt and gravel sizes to standard grade size limits.

NOTE: Classification of earth material as shown on this sheet is based upon field inspection and is not to be construed to imply mechanical analysis.

FIELD STUDY: H. L. Nelson 3-71
TRACK: S. Nagamatsu 4-6-71
CHECKED: M. T. Nelson 4-12-71
Approval Recommended: J. J. Jenkins
Engineering Geologist

BRIDGE DEPARTMENT
ENGINEERING GEOLOGY SECTION

AS BUILT PLANS
Contract No. 04-419264
Date Completed 09-71
Document No. 40006425

I HEREBY CERTIFY THAT THIS IS A TRUE AND ACCURATE COPY OF THE ABOVE DOCUMENT TAKEN UNDER MY DIRECTION AND CONTROL ON THIS DATE IN SACRAMENTO, CALIFORNIA PURSUANT TO AUTHORIZATION BY THE DIRECTOR OF TRANSPORTATION.

DATE 6-17-74 SIGNATURE James E. Cant TITLE Materials Engineer

DIST	COUNTY	ROUTE	POST MILES TOTAL PROJECT	SHEET No	TOTAL SHEETS
04	SM	280	10.7/11.0	64	83

REGISTERED CIVIL ENGINEER 12-15-10 DATE

1-18-11
PLANS APPROVAL DATE

REGISTERED PROFESSIONAL ENGINEER PHILIP E. LUTZ No. C55839 Exp. 12/31/12 CIVIL STATE OF CALIFORNIA

The State of California or its officers or agents shall not be responsible for the accuracy or completeness of electronic copies of this plan sheet.

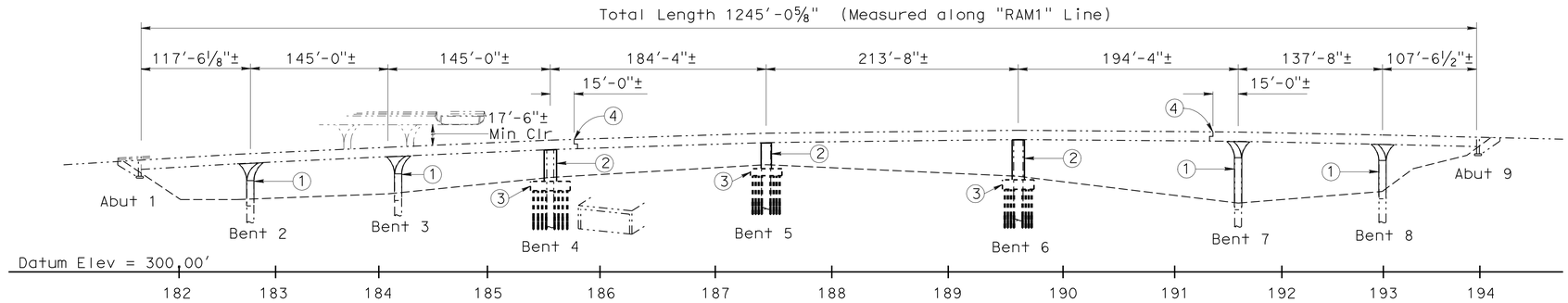

ELEVATION

SCALE: 1' = 60'

QUANTITIES

ACCESS OPENING, DECK	8	EA
BRIDGE REMOVAL (PORTION), LOCATION B	LUMP	SUM
STRUCTURE EXCAVATION (HAZARDOUS WASTE)	1,360	CY
STRUCTURE BACKFILL (BRIDGE)	540	CY
MICROPILE	136	EA
STRUCTURAL CONCRETE, BRIDGE FOOTING	811	CY
STRUCTURAL CONCRETE, BRIDGE	290	CY
DIAPHRAGM BOLSTER	8	EA
DRILL AND BOND DOWEL	175	LF
CLOSE ACCESS, DECK	8	EA
CORE CONCRETE (7")	144	LF
BAR REINFORCING STEEL (BRIDGE)	338,000	LB
HEADED BAR REINFORCEMENT	1,588	EA
ASPHALT MEMBRANE WATERPROOFING	470	SQFT
COLUMN CASING	89,500	LB
MISCELLANEOUS METAL (SEAT EXTENDER-PIPE)	7,250	LB

RETROFIT LEGEND:

1. Column Retrofit (Steel Casing)
2. Column Retrofit
3. Install Pile Cap and Micropiles
4. Install Hinge Seat Extenders
5. Temporary Deck Access Openings
6. Temporary Deck Access Openings (Optional)
7. Stage 1 Traffic
8. Stage 2 Traffic

——— Denotes new construction

-·-·-·- Denotes existing structure

Note:

For General Notes, Index to Plans, Standard Plans List and Pile Data Table, see "INDEX TO PLANS" sheet.

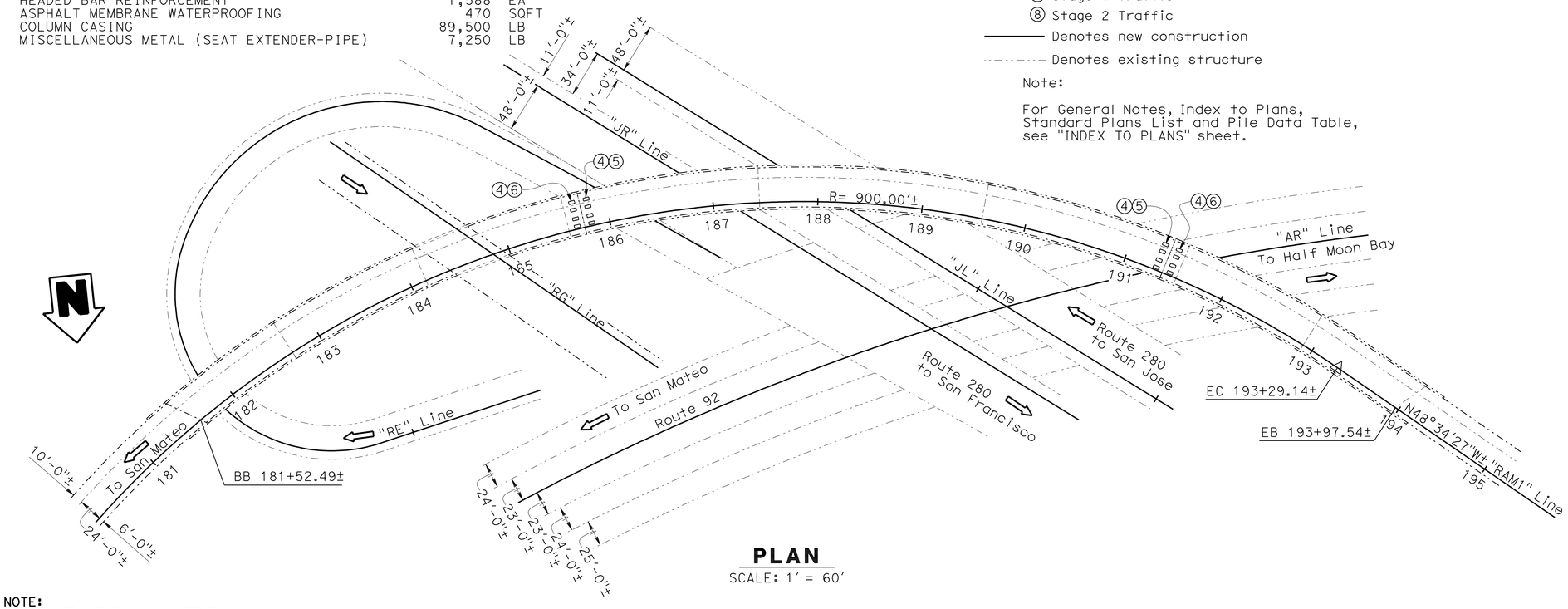

PLAN

SCALE: 1' = 60'

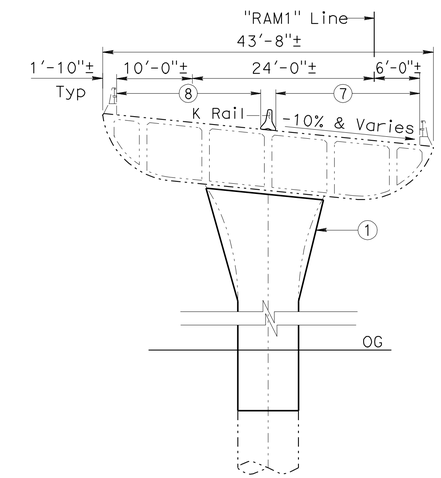

BENTS 2, 3, 7 AND 8

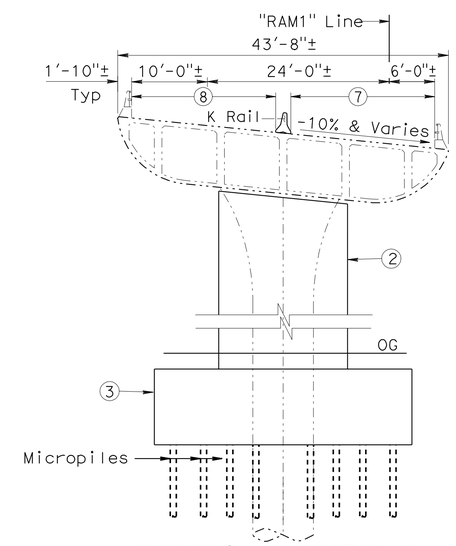

BENTS 4 THRU 6

TYPICAL SECTIONS

SCALE: 1" = 10'

NOTE:
THE CONTRACTOR SHALL VERIFY ALL CONTROLLING FIELD DIMENSIONS BEFORE ORDERING OR FABRICATING ANY MATERIAL.

DESIGN	BY David Small	CHECKED P. Lutz	LOAD & RESISTANCE FACTOR DESIGN	LIVE LOADING: HL93 W/"LOW-BOY"; PERMIT DESIGN VEHICLE
DETAILS	BY D. Elliott/T. Fairall	CHECKED P. Lutz	LAYOUT BY David Small	CHECKED Phil Lutz
QUANTITIES	BY David Small	CHECKED P.Lutz	SPECIFICATIONS BY Erwin Rufino	PLANS AND SPECS COMPARED Erwin Rufino

Gordon Danke
DESIGN ENGINEER

STATE OF CALIFORNIA
DEPARTMENT OF TRANSPORTATION

DIVISION OF ENGINEERING SERVICES
STRUCTURE DESIGN
DESIGN BRANCH 9

BRIDGE NO. 35-0245F
POST MILE 10.8

S280/E92 CONNECTOR OC (RETROFIT)
GENERAL PLAN

STRUCTURES DESIGN GENERAL PLAN SHEET (ENGLISH) (REV. 10/25/05)

ORIGINAL SCALE IN INCHES FOR REDUCED PLANS 0 1 2 3

CU 04245
EA 1A7701

DISREGARD PRINTS BEARING EARLIER REVISION DATES

REVISION DATES: 09-18-08 02-27-09 03-27-09 04-24-09 10-21-10 12-10-10

SHEET 1 OF 20

FILE => 35-0245f-a-gp.dgn

STRUCTURES DESIGN GENERAL PLAN SHEET (ENGLISH) (REV.07-24-06)

USERNAME => trstrk DATE PLOTTED => 20-JAN-2011 TIME PLOTTED => 10:26

DIST	COUNTY	ROUTE	POST MILES TOTAL PROJECT	SHEET No	TOTAL SHEETS
04	SM	280	10.7/11.0	65	83

REGISTERED CIVIL ENGINEER 12-15-10 DATE

1-18-11
PLANS APPROVAL DATE

REGISTERED PROFESSIONAL ENGINEER PHILIP E. LUTZ No. C55839 Exp. 12/31/12 CIVIL STATE OF CALIFORNIA

The State of California or its officers or agents shall not be responsible for the accuracy or completeness of electronic copies of this plan sheet.

GENERAL NOTES
LOAD FACTOR DESIGN

DESIGN:
Bridge Design Specifications ('96 AASHTO w/Revisions by Caltrans)

SEISMIC DESIGN:
Caltrans Seismic Design Criteria (SDC), Version 1.4 dated June 2006

DEAD LOAD:
Includes 35 psf for future wearing surface.

SEISMIC LOADING:
See "SITE SPECIFIC ACCELERATION RESPONSE SPECTRA CURVE"

CONCRETE:
fy = 60 ksi
f'c = 3.6 ksi
n = 8

PILE DATA TABLE

Support Location	Pile Type	Cutoff Elevation (ft)	Design Load (kips) Extreme Event Comp. (Kip)	Design Load (kips) Extreme Event Tension (Kip)	Design Tip Elevation *, ** (ft)	Specified Tip Elevation *, ** (ft)
Bent 4	Micropile	380.5	468	328	311	311
Bent 5	Micropile	390	380	266	331	331
Bent 6	Micropile	369.5	430	301	305	305

* The tip elevations controlled by tension are shown for estimating purposes only. The bond zone length and plunge length to be determined by Contractor.

Note:

1. For "PERFORMANCE TEST PILE DATA", see "PERFORMANCE TEST PILE DATA TABLE".

INDEX TO PLANS

1 GENERAL PLAN
2 INDEX TO PLANS
3 FOUNDATION PLAN No. 1
4 FOUNDATION PLAN No. 2
5 BENT DETAILS No. 1
6 BENT DETAILS No. 2
7 BENT DETAILS No. 3
8 BENT DETAILS No. 4
9 MICROPILE DETAILS
10 COLUMN DETAILS
11 SEAT EXTENDER DETAILS
12 LOG OF TEST BORINGS 1 OF 9
13 LOG OF TEST BORINGS 2 OF 9
14 LOG OF TEST BORINGS 3 OF 9
15 LOG OF TEST BORINGS 4 OF 9
16 LOG OF TEST BORINGS 5 OF 9
17 LOG OF TEST BORINGS 6 OF 9
18 LOG OF TEST BORINGS 7 OF 9
19 LOG OF TEST BORINGS 8 OF 9
20 LOG OF TEST BORINGS 9 OF 9

STANDARD PLANS DATED MAY 2006

A10A ACRONYMS AND ABBREVIATIONS (SHEET 1 OF 2)
A10B ACRONYMS AND ABBREVIATIONS (SHEET 2 OF 2)
A10C SYMBOLS (SHEET 1 OF 2)
A10D SYMBOLS (SHEET 2 OF 2)
A62C LIMITS OF PAYMENT FOR EXCAVATION AND BACKFILL BRIDGE

STANDARD PLAN SHEET No.
DETAIL No.

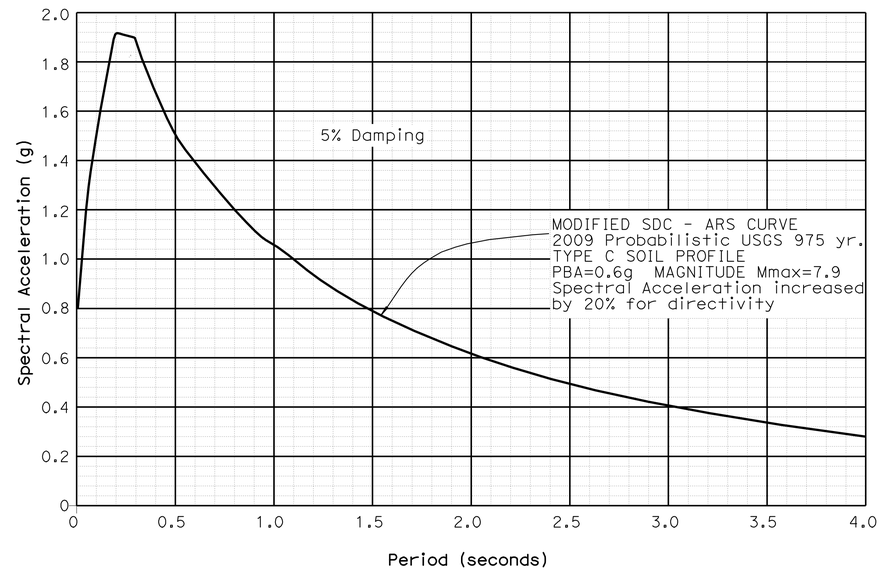

SITE SPECIFIC ACCELERATION RESPONSE SPECTRA CURVE

No Scale

CONCRETE STRENGTH AND TYPE LIMITS

No Scale

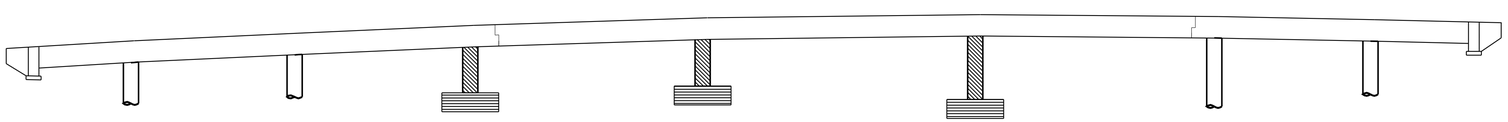

Structural Concrete, Bridge (Substructure) (f'c = 4000 psi)

Structural Concrete, Bridge Footing (f'c = 4000 psi)

NOTE:
THE CONTRACTOR SHALL VERIFY ALL CONTROLLING FIELD DIMENSIONS BEFORE ORDERING OR FABRICATING ANY MATERIAL.

	BY	CHECKED
DESIGN	David Small	P. Lutz
DETAILS	P Carreon/DE	P. Lutz
QUANTITIES	David Small	P. Lutz

STATE OF CALIFORNIA
DEPARTMENT OF TRANSPORTATION

DIVISION OF ENGINEERING SERVICES
STRUCTURE DESIGN
DESIGN BRANCH 9

BRIDGE NO. 35-0245F
POST MILE 10.8

S280/E92 CONNECTOR (RETROFIT)
INDEX TO PLANS

STRUCTURES DESIGN DETAIL SHEET (ENGLISH) (REV. 10/25/05)

ORIGINAL SCALE IN INCHES FOR REDUCED PLANS 0 1 2 3

CU 04245
EA 1A7701

DISREGARD PRINTS BEARING EARLIER REVISION DATES

REVISION DATES: 4-23-09 10-21-10 12-3-10 12-9-10

SHEET 2 OF 20

FILE => 35-0245f-a-itp.dgn

USERNAME => ttstrk DATE PLOTTED => 20-JAN-2011 TIME PLOTTED => 10:27

DIST	COUNTY	ROUTE	POST MILES TOTAL PROJECT	SHEET No	TOTAL SHEETS
04	SM	280	10.7/11.0	66	83

REGISTERED CIVIL ENGINEER — DATE 12-15-10

1-18-11
PLANS APPROVAL DATE

REGISTERED PROFESSIONAL ENGINEER — PHILIIP E. LUTZ — No. C55839 — Exp. 12/31/12 — CIVIL — STATE OF CALIFORNIA

The State of California or its officers or agents shall not be responsible for the accuracy or completeness of electronic copies of this plan sheet.

CURVE DATA

No.	R	Δ	T	L
(A)	1000.00	42°9′47″	385.50	735.89
(B)	900.00	92°7′34″	934.03	1447.11

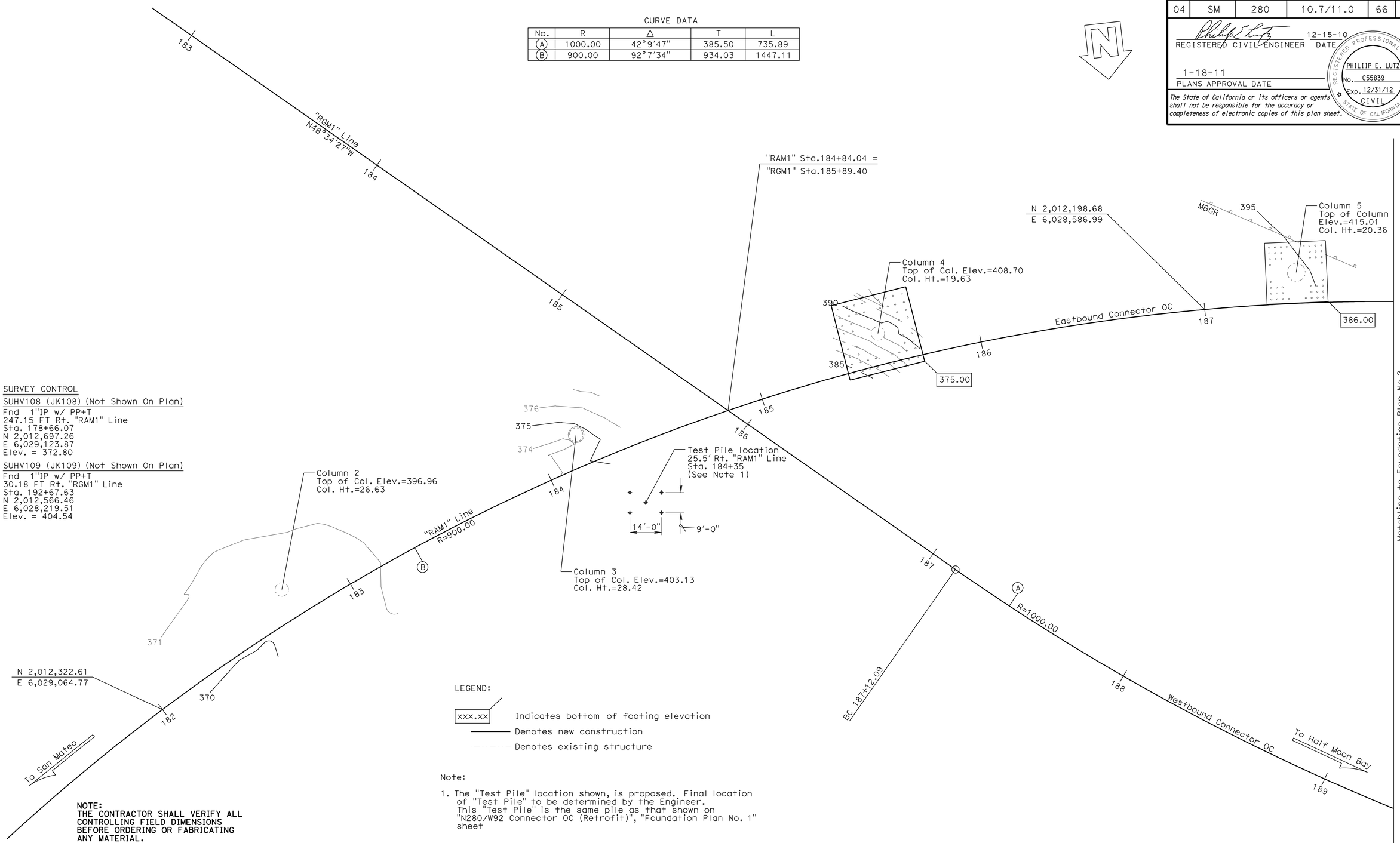

SURVEY CONTROL

SUHV108 (JK108) (Not Shown On Plan)
Fnd 1"IP w/ PP+T
247.15 FT Rt. "RAM1" Line
Sta. 178+66.07
N 2,012,697.26
E 6,029,123.87
Elev. = 372.80

SUHV109 (JK109) (Not Shown On Plan)
Fnd 1"IP w/ PP+T
30.18 FT Rt. "RGM1" Line
Sta. 192+67.63
N 2,012,566.46
E 6,028,219.51
Elev. = 404.54

LEGEND:

xxx.xx — Indicates bottom of footing elevation
Denotes new construction
Denotes existing structure

Note:

1. The "Test Pile" location shown, is proposed. Final location of "Test Pile" to be determined by the Engineer. This "Test Pile" is the same pile as that shown on "N280/W92 Connector OC (Retrofit)", "Foundation Plan No. 1" sheet

NOTE:
THE CONTRACTOR SHALL VERIFY ALL CONTROLLING FIELD DIMENSIONS BEFORE ORDERING OR FABRICATING ANY MATERIAL.

PRELIMINARY INVESTIGATION SECTION

SCALE 1"=20′	VERT.DATUM NAVD88	PHOTOGRAMMETRY AS OF: X		
	HORZ.DATUM NAD83 (1991.35)	SURVEYED	BY Dist./ T.Gillett	CHECKED BY T.Gillett 02/2009
	ALIGNMENT TIES Dist. Traverse Sheet	DRAFTED	BY J.Martinez 02/2009	CHECKED BY J.Pallares 02/2009

DESIGN	BY David Small	CHECKED P. Lutz
DETAILS	BY Pete Carreon/DE	CHECKED P. Lutz
QUANTITIES	BY David Small	CHECKED P. Lutz

STATE OF CALIFORNIA
DEPARTMENT OF TRANSPORTATION

DIVISION OF ENGINEERING SERVICES
STRUCTURE DESIGN
DESIGN BRANCH 9

BRIDGE NO. 35-0245F
POST MILE 10.8

S280/E92 CONNECTOR OC (RETROFIT)
FOUNDATION PLAN No. 1

STRUCTURES FOUNDATION PLAN SHEET (ENGLISH) (REV. 10/25/05)

ORIGINAL SCALE IN INCHES FOR REDUCED PLANS 0 1 2 3

CU 04245
EA 1A7701

DISREGARD PRINTS BEARING EARLIER REVISION DATES

REVISION DATES: 2/25/09 4/16/09 10-2-10 10-21-10

SHEET 3 OF 20

FILE => 35-0245f-e-fp01.dgn

USERNAME => trstrk DATE PLOTTED => 20-JAN-2011 TIME PLOTTED => 10:27

DIST	COUNTY	ROUTE	POST MILES TOTAL PROJECT	SHEET No	TOTAL SHEETS
04	SM	280	10.7/11.0	67	83

REGISTERED CIVIL ENGINEER 12-15-10 DATE

1-18-11
PLANS APPROVAL DATE

REGISTERED PROFESSIONAL ENGINEER PHILIIP E. LUTZ No. C55839 Exp. 12/31/12 CIVIL STATE OF CALIFORNIA

The State of California or its officers or agents shall not be responsible for the accuracy or completeness of electronic copies of this plan sheet.

CURVE DATA

No.	R	Δ	T	L
(B)	900.00	92°7'34"	934.03	1447.11

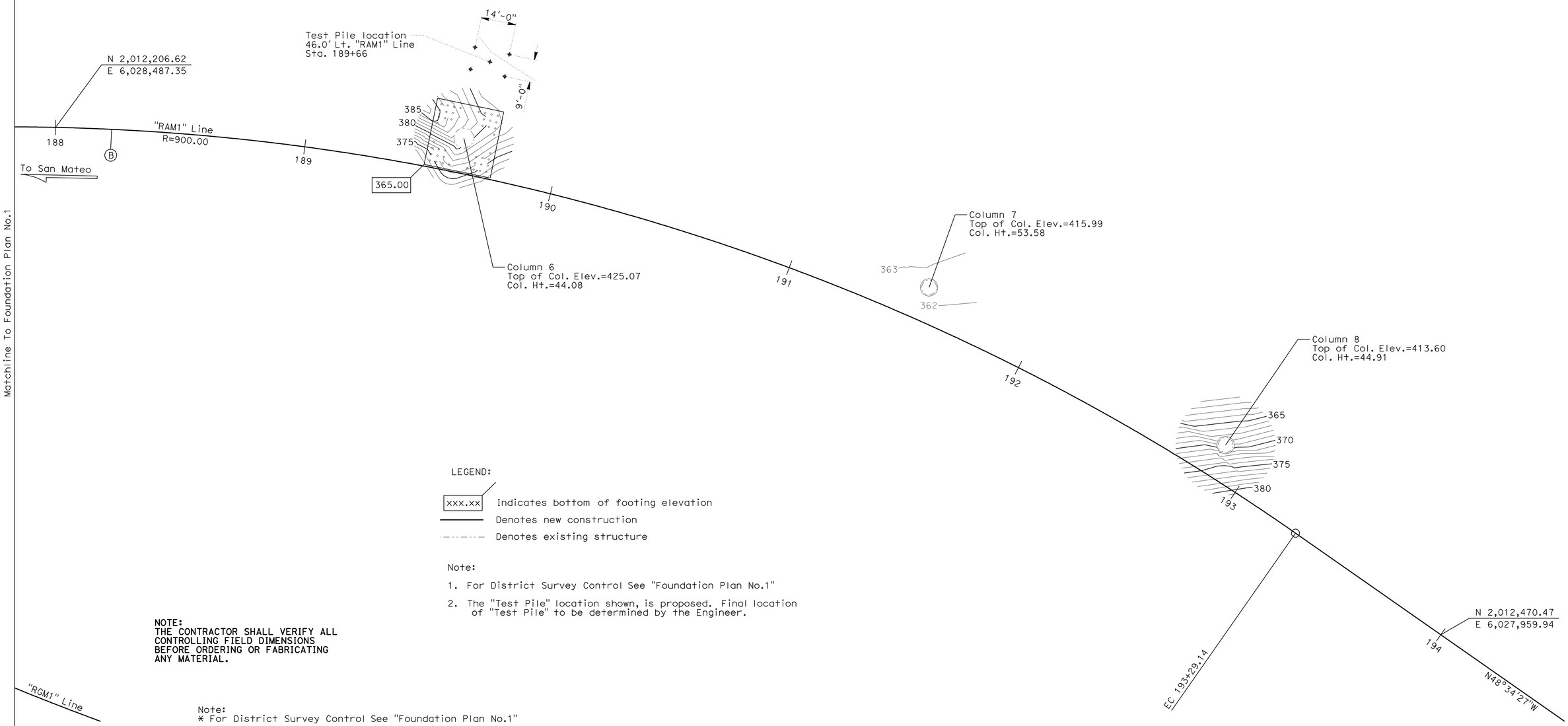

LEGEND:

xxx.xx	Indicates bottom of footing elevation
———	Denotes new construction
-·-·-·-	Denotes existing structure

Note:

1. For District Survey Control See "Foundation Plan No.1"
2. The "Test Pile" location shown, is proposed. Final location of "Test Pile" to be determined by the Engineer.

NOTE:
THE CONTRACTOR SHALL VERIFY ALL CONTROLLING FIELD DIMENSIONS BEFORE ORDERING OR FABRICATING ANY MATERIAL.

Note:
* For District Survey Control See "Foundation Plan No.1"

PRELIMINARY INVESTIGATION SECTION

SCALE	VERT.DATUM NAVD88	PHOTOGRAMMETRY AS OF: X			
1"=20'	HORZ.DATUM NAD83 (1991.35)	SURVEYED	BY Dist./ T.Gillett	CHECKED	BY T.Gillett 02/2009
ALIGNMENT TIES Dist. Traverse Sheet		DRAFTED	BY J.Martinez 02/2009	CHECKED	BY J.Pallares 02/2009

	BY	CHECKED
DESIGN	David Small	P. Lutz
DETAILS	Pete Carreon/DE	P. Lutz
QUANTITIES	David Small	P. Lutz

STATE OF CALIFORNIA
DEPARTMENT OF TRANSPORTATION

DIVISION OF ENGINEERING SERVICES
STRUCTURE DESIGN
DESIGN BRANCH 9

BRIDGE NO. 35-0245F
POST MILE 10.8

S280/E92 CONNECTOR OC (RETROFIT)
FOUNDATION PLAN No. 2

STRUCTURES FOUNDATION PLAN SHEET (ENGLISH) (REV. 10/25/05)

ORIGINAL SCALE IN INCHES FOR REDUCED PLANS 0 1 2 3

CU 04245
EA 1A7701

DISREGARD PRINTS BEARING EARLIER REVISION DATES

REVISION DATES: 2/23/09 4/16/09 10-4-10 10-21-10

SHEET 4 OF 20

FILE => 35-0245f-e-fp02.dgn

USERNAME => ttrstrk DATE PLOTTED => 20-JAN-2011 TIME PLOTTED => 10:27

DIST	COUNTY	ROUTE	POST MILES TOTAL PROJECT	SHEET No	TOTAL SHEETS
04	SM	280	10.7/11.0	68	83

REGISTERED CIVIL ENGINEER 12-15-10 DATE

1-18-11
PLANS APPROVAL DATE

REGISTERED PROFESSIONAL ENGINEER Philip E Lutz No. C55839 Exp. 12/31/12 CIVIL STATE OF CALIFORNIA

The State of California or its officers or agents shall not be responsible for the accuracy or completeness of electronic copies of this plan sheet.

LEGEND :

- Bundled bars
- Denotes new construction
- Denotes existing structure
- Denotes limits of concrete removal

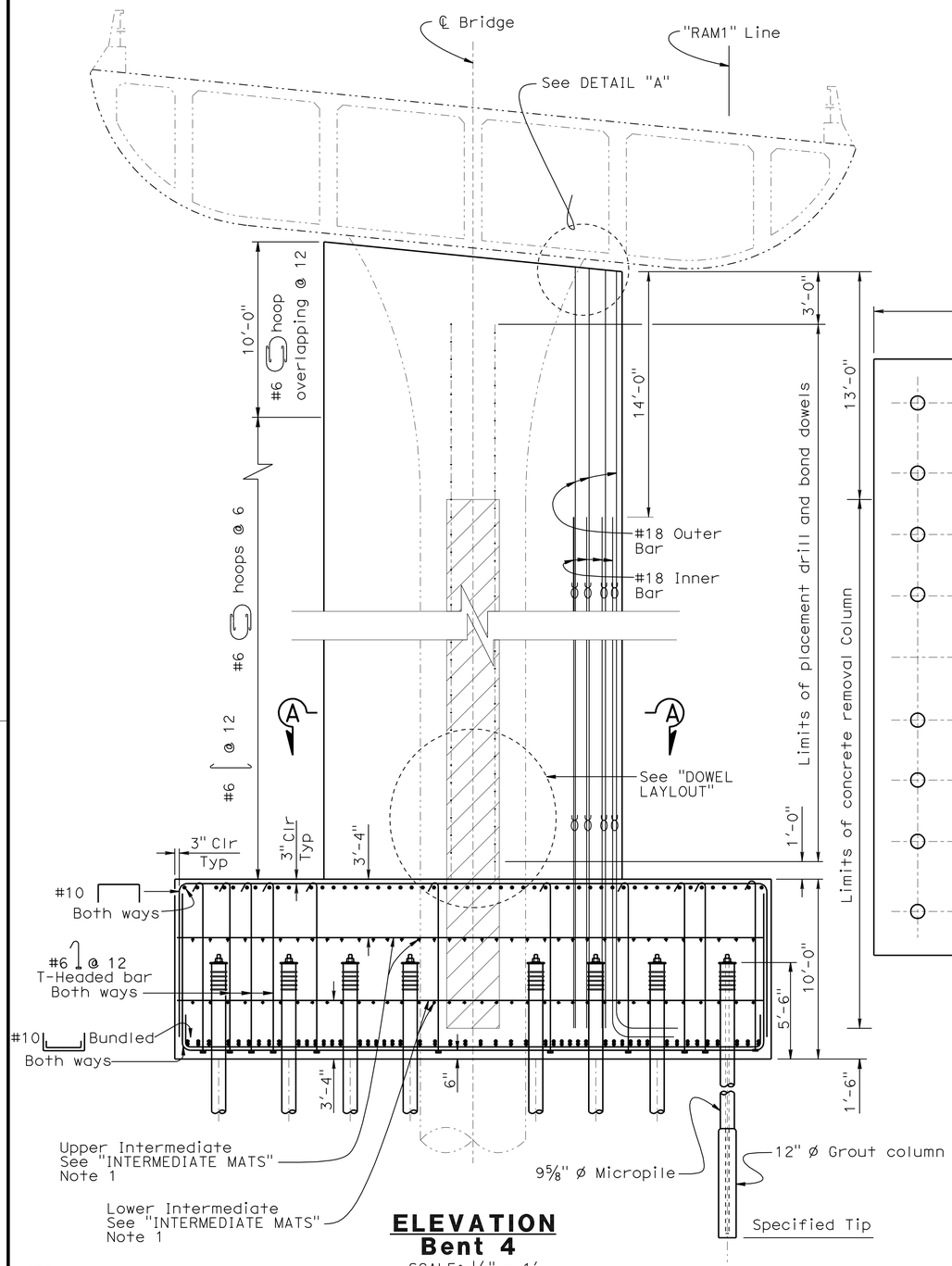

ELEVATION
Bent 4
SCALE: ¼" = 1'

NOTE:
THE CONTRACTOR SHALL VERIFY ALL CONTROLLING FIELD DIMENSIONS BEFORE ORDERING OR FABRICATING ANY MATERIAL.

NOTE: Not all reinforcement is shown

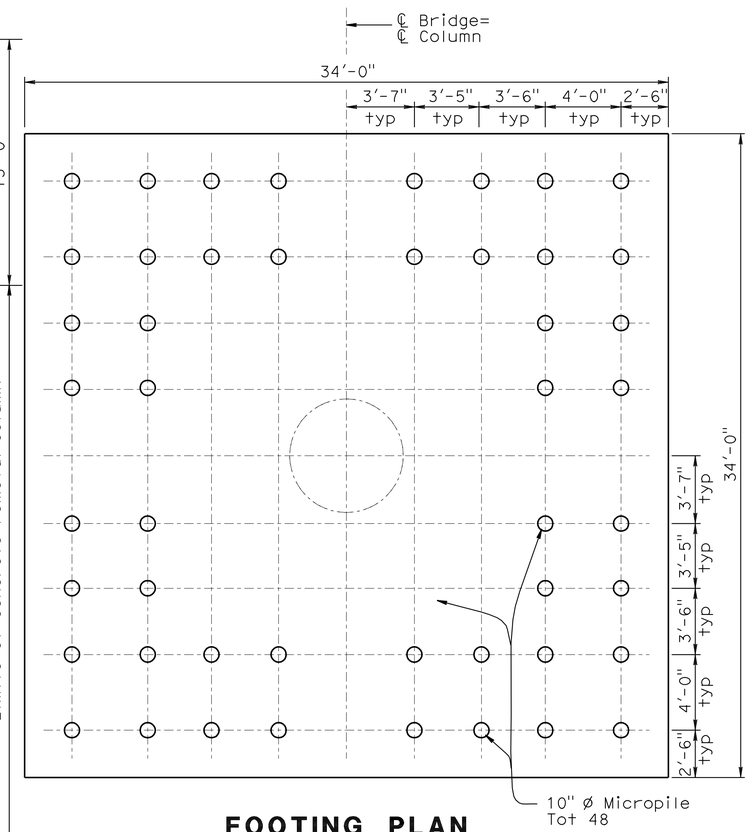

FOOTING PLAN
SCALE: ¼" = 1'

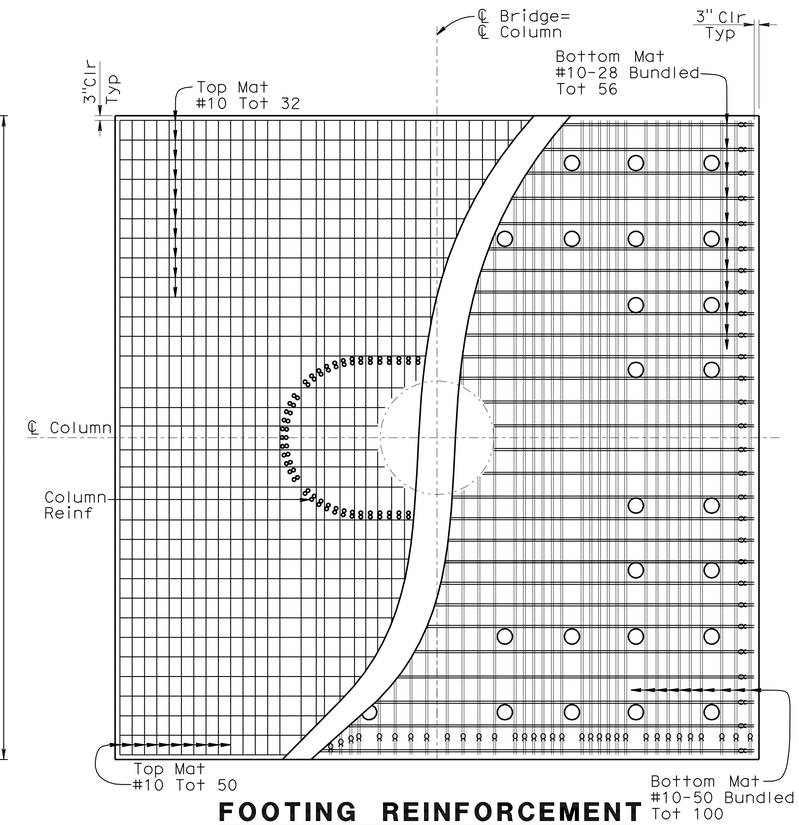

FOOTING REINFORCEMENT
SCALE: ¼" = 1'

NOTES:

1. For "SECTION A-A", "DETAIL "A"", "DOWEL LAYOUT" and "INTERMEDIATE MATS" see "BENT DETAILS No. 4" sheet.
2. Adjust top mat spacing to clear column reinforcement. Adjust bottom mat spacing to clear mircopiles.
3. Reinforcement at existing column region discontinuous.
4. No splices allowed in main column reinforcement.
5. Omit footing stirrups under oval column section.
6. Main column reinforcement standard hook at bottom.
7. For Pile Details, see "MICROPILE DETAILS" sheet.

	BY	CHECKED
DESIGN	David Small	P. Lutz
DETAILS	PC/TF/D. Elliott	P. Lutz
QUANTITIES	David Small	P. Lutz

STATE OF CALIFORNIA
DEPARTMENT OF TRANSPORTATION

DIVISION OF ENGINEERING SERVICES
STRUCTURE DESIGN
DESIGN BRANCH 9

BRIDGE NO. 35-0245F
POST MILE 10.8

S280/E92 CONNECTOR OC (RETROFIT)
BENT DETAILS No. 1

STRUCTURES DESIGN DETAIL SHEET (ENGLISH) (REV. 10/25/05)

ORIGINAL SCALE IN INCHES FOR REDUCED PLANS 0 1 2 3

CU 04245
EA 1A7701

DISREGARD PRINTS BEARING EARLIER REVISION DATES

REVISION DATES: 10-26-10 12-3-10 5-26-09 6-09-09 10-6-10 10-8-10 10-14-10 10-19-10 10-21-10

SHEET 5 OF 20

FILE => 35-0245f-h-bent_det01.dgn

USERNAME => trstrk DATE PLOTTED => 20-JAN-2011 TIME PLOTTED => 10:27

DIST	COUNTY	ROUTE	POST MILES TOTAL PROJECT	SHEET No	TOTAL SHEETS
04	SM	280	10.7/11.0	69	83

REGISTERED CIVIL ENGINEER 12-15-10 DATE

1-18-11
PLANS APPROVAL DATE

REGISTERED PROFESSIONAL ENGINEER PHILIP E. LUTZ No. C55839 Exp. 12/31/12 CIVIL STATE OF CALIFORNIA

The State of California or its officers or agents shall not be responsible for the accuracy or completeness of electronic copies of this plan sheet.

LEGEND:

- Bundled bars
- Denotes new construction
- Denotes existing structure
- Denotes limits of concrete removal

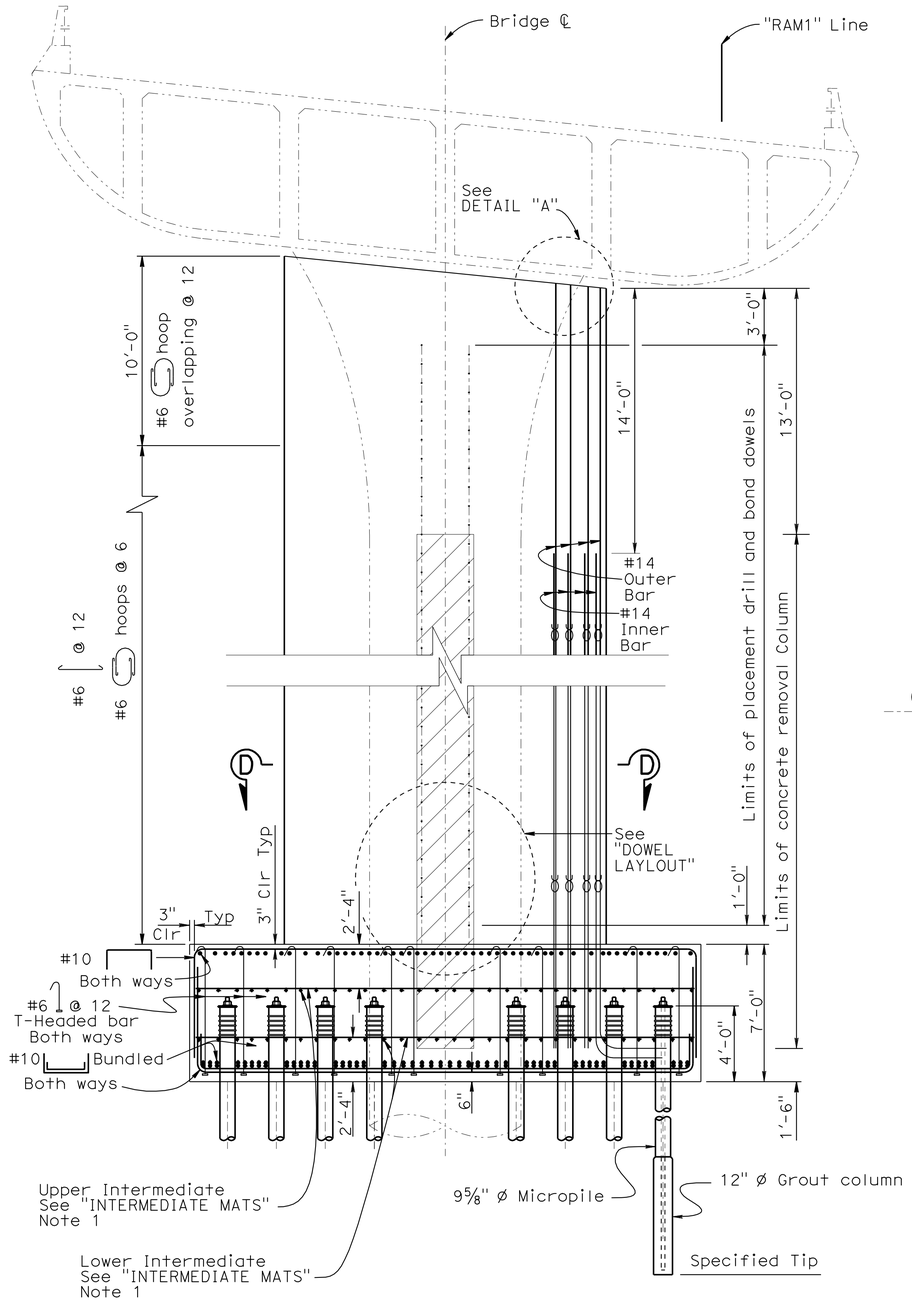

ELEVATION

Bent 5

SCALE: ¼" = 1'

NOTE: Not all reinforcement is shown

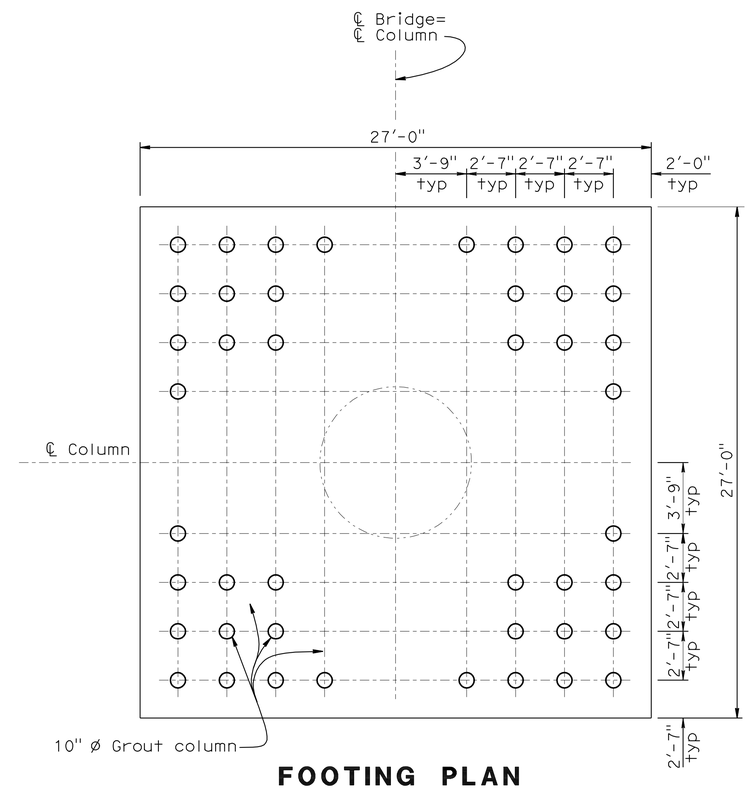

FOOTING PLAN

SCALE: ¼" = 1'

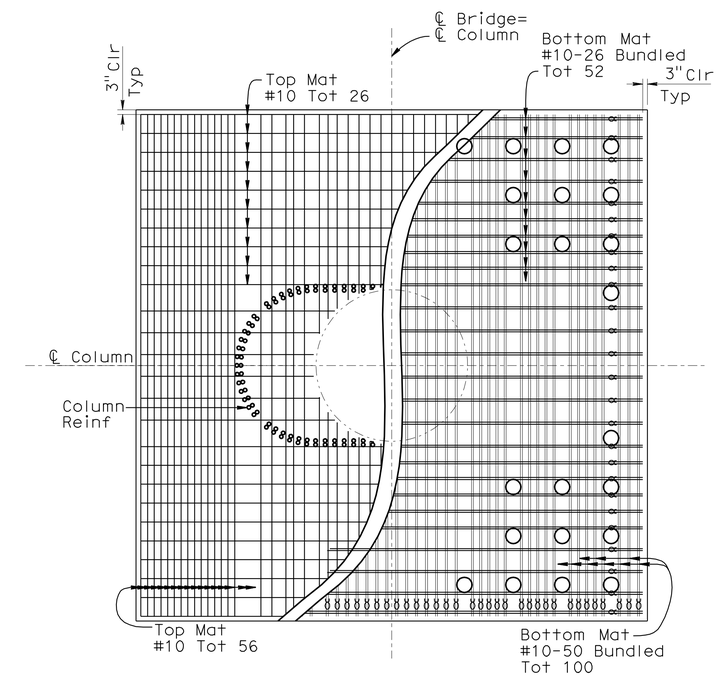

FOOTING REINFORCEMENT

SCALE: ¼" = 1'

NOTES:

1. For "SECTION D-D", "DETAIL "A"", "DOWEL LAYOUT" and "INTERMEDIATE MATS" see "BENT DETAILS No. 4" sheet.
2. Adjust top mat spacing to clear column reinforcement. Adjust bottom mat spacing to clear micropiles.
3. Reinforcement at existing column region discontinuous.
4. No splices allowed in main column reinforcement.
5. Omit footing stirrups under oval column section.
6. Main column reinforcement standard hook at bottom.
7. For Pile Details, see "MICROPILE DETAILS" sheet.

NOTE:
THE CONTRACTOR SHALL VERIFY ALL CONTROLLING FIELD DIMENSIONS BEFORE ORDERING OR FABRICATING ANY MATERIAL.

	BY	CHECKED
DESIGN	David Small	P. Lutz
DETAILS	PC/TF/DE	P. Lutz
QUANTITIES	David Small	P. Lutz

STATE OF CALIFORNIA
DEPARTMENT OF TRANSPORTATION

DIVISION OF ENGINEERING SERVICES
STRUCTURE DESIGN
DESIGN BRANCH 9

BRIDGE NO. 35-0245F
POST MILE 10.8

S280/E92 CONNECTOR (RETROFIT)

BENT DETAILS No. 2

STRUCTURES DESIGN DETAIL SHEET (ENGLISH) (REV. 10/25/05)

ORIGINAL SCALE IN INCHES FOR REDUCED PLANS 0 1 2 3

CU 04245
EA 1A7701

DISREGARD PRINTS BEARING EARLIER REVISION DATES

REVISION DATES: 04-04-09 4-07-09 5-26-09 6-09-09 10-14-10 10-19-10 10-21-10 10-25-10 12-3-10

SHEET 6 OF 20

FILE => 35-0245f-h-bent_det02.dgn

USERNAME => trostrk DATE PLOTTED => 20-JAN-2011 TIME PLOTTED => 10:32

DIST	COUNTY	ROUTE	POST MILES TOTAL PROJECT	SHEET No	TOTAL SHEETS
04	SM	280	10.7/11.0	70	83

REGISTERED CIVIL ENGINEER 12-15-10 DATE

1-18-11
PLANS APPROVAL DATE

REGISTERED PROFESSIONAL ENGINEER PHILIP E. LUTZ No. C55839 Exp. 12/31/12 CIVIL STATE OF CALIFORNIA

The State of California or its officers or agents shall not be responsible for the accuracy or completeness of electronic copies of this plan sheet.

LEGEND :

- Bundled bars
- Denotes new construction
- Denotes existing structure
- Denotes limits of concrete removal

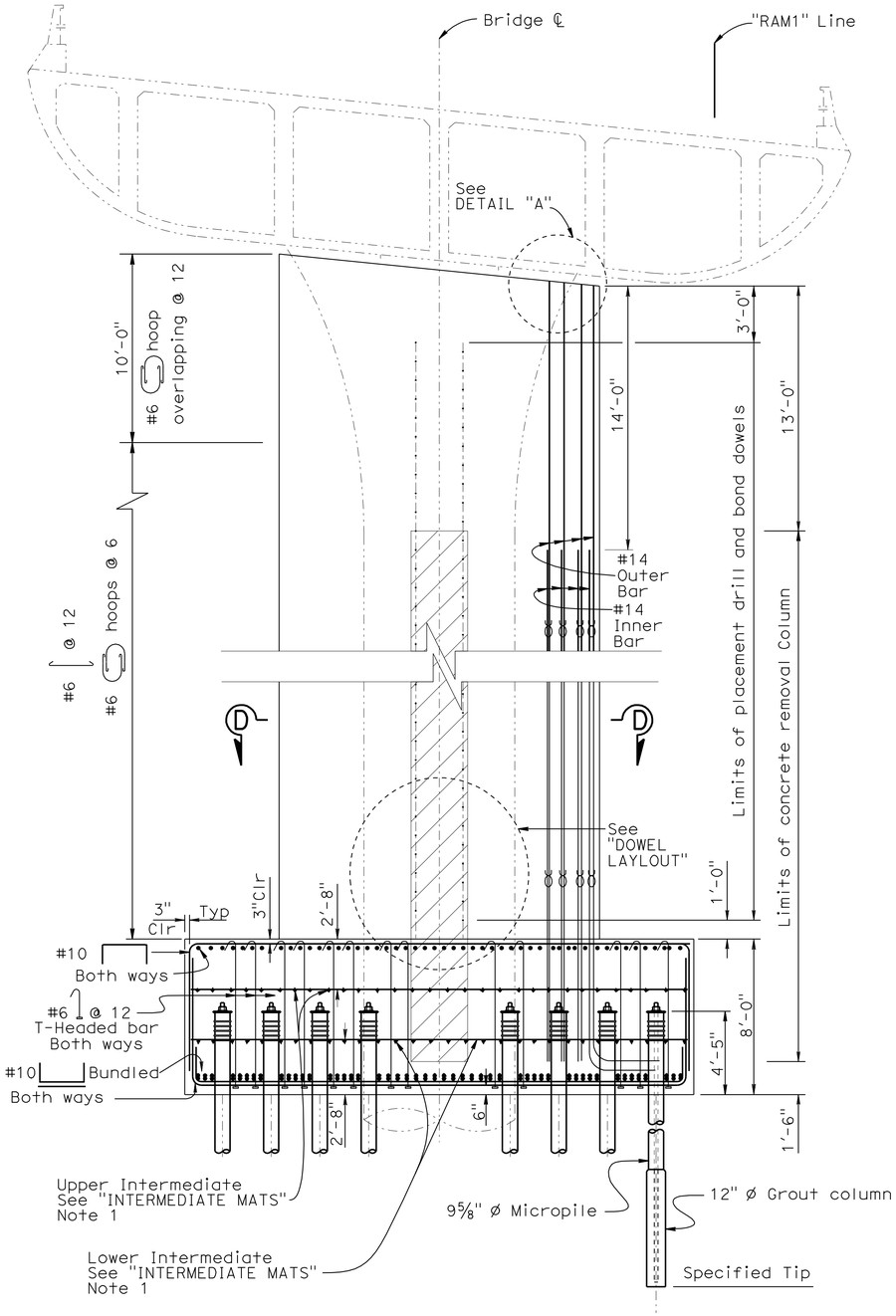

ELEVATION
Bent 6
SCALE: ¼" = 1'

NOTE: Not all reinforcemen is shown

NOTE:
THE CONTRACTOR SHALL VERIFY ALL CONTROLLING FIELD DIMENSIONS BEFORE ORDERING OR FABRICATING ANY MATERIAL.

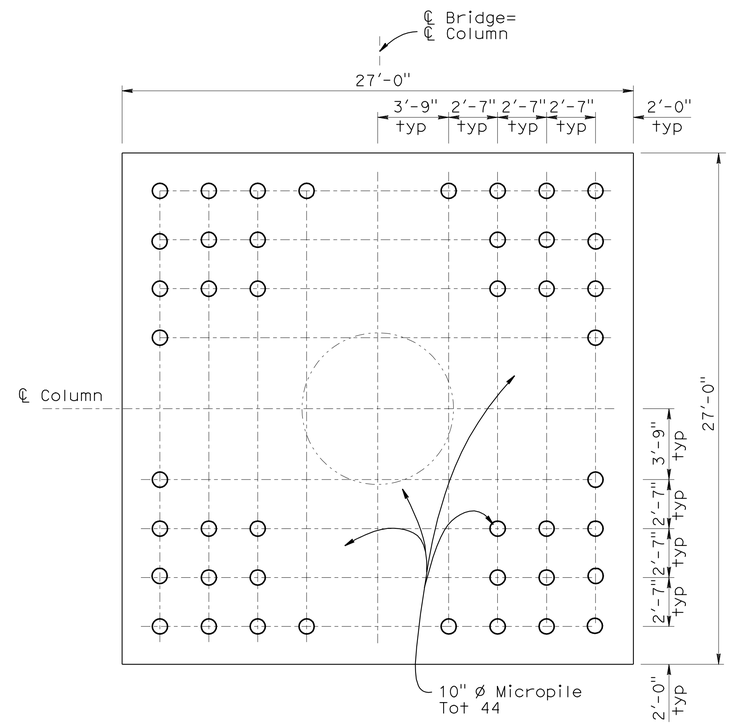

FOOTING PLAN
SCALE: ¼" = 1'

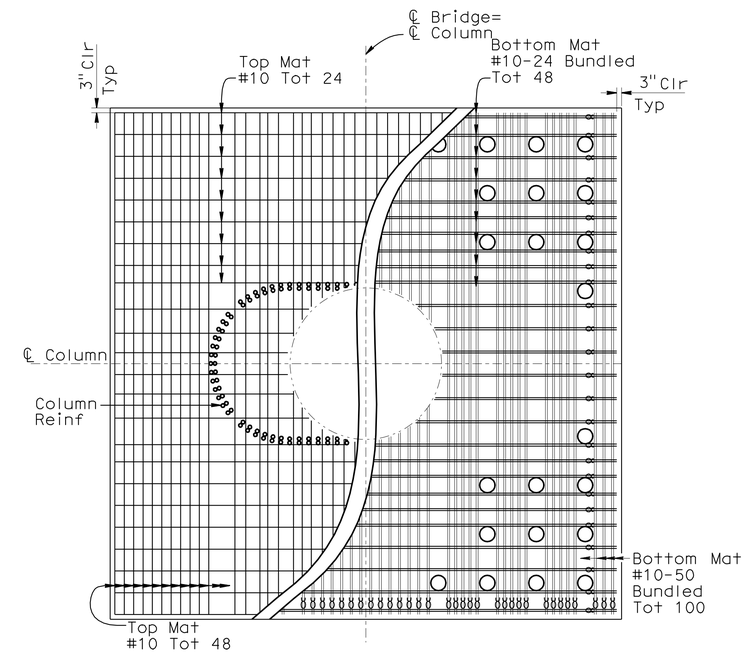

FOOTING REINFORCEMENT
SCALE: ¼" = 1'

NOTES:

1. For "SECTION D-D", "DETAIL "A"", "DOWEL LAYOUT" and "INTERMEDIATE MATS" see "BENT DETAILS No. 4" sheet.
2. Adjust top mat spacing to clear column reinforcement. Adjust bottom mat spacing to clear micropiles.
3. Reinforcement at existing column region discontinuous.
4. No splices allowed in main column reinforcement.
5. Omit footing stirrups under oval column section.
6. Main column reinforcement standard hook at bottom.
7. For Pile Details, see "MICROPILE DETAILS" sheet.

	BY	CHECKED
DESIGN	David Small	P. Lutz
DETAILS	PC/TF/DE	P. Lutz
QUANTITIES	David Small	P. Lutz

STATE OF CALIFORNIA
DEPARTMENT OF TRANSPORTATION

DIVISION OF ENGINEERING SERVICES
STRUCTURE DESIGN
DESIGN BRANCH 9

BRIDGE NO. 35-0245F
POST MILE 10.8

S280/E92 CONNECTOR (RETROFIT)
BENT DETAILS No. 3

STRUCTURES DESIGN DETAIL SHEET (ENGLISH) (REV. 10/25/05)

ORIGINAL SCALE IN INCHES FOR REDUCED PLANS 0 1 2 3

CU 04245
EA 1A7701

DISREGARD PRINTS BEARING EARLIER REVISION DATES

REVISION DATES: 04-04-09 5-26-09 6-09-09 10-13-10 10-14-10 10-19-10 10-21-10 10-25-10 12-3-10

SHEET 7 OF 20

FILE => 35-0245f-h-bent_det03.dgn

USERNAME => trstrk DATE PLOTTED => 20-JAN-2011 TIME PLOTTED => 10:27

DIST	COUNTY	ROUTE	POST MILES TOTAL PROJECT	SHEET No	TOTAL SHEETS
04	SM	280	10.7/11.0	71	83

REGISTERED CIVIL ENGINEER 12-15-10 DATE

1-18-11
PLANS APPROVAL DATE

REGISTERED PROFESSIONAL ENGINEER PHILIP E. LUTZ No. C55839 Exp. 12/31/12 CIVIL STATE OF CALIFORNIA

The State of California or its officers or agents shall not be responsible for the accuracy or completeness of electronic copies of this plan sheet.

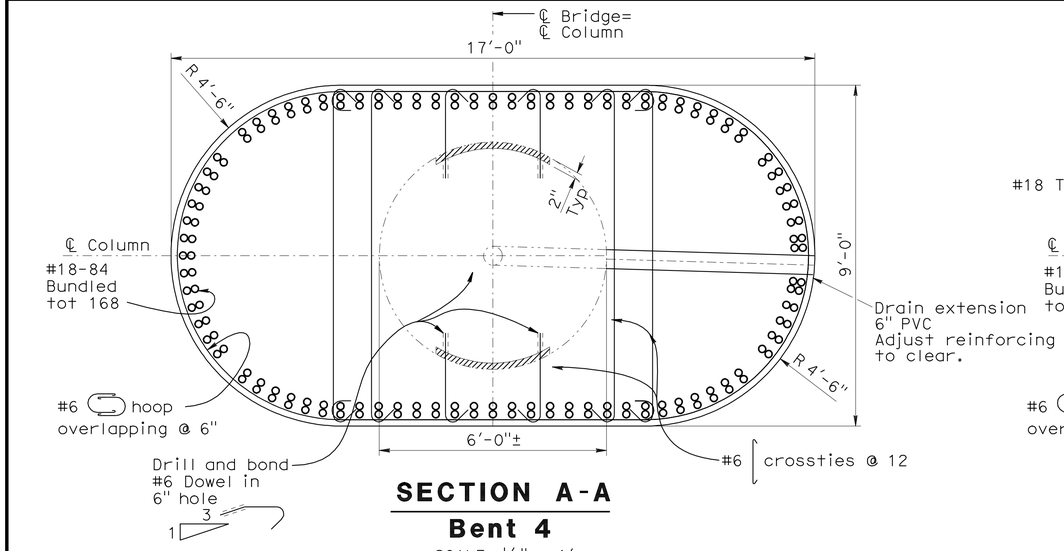

SECTION A-A
Bent 4
SCALE: ½" = 1'

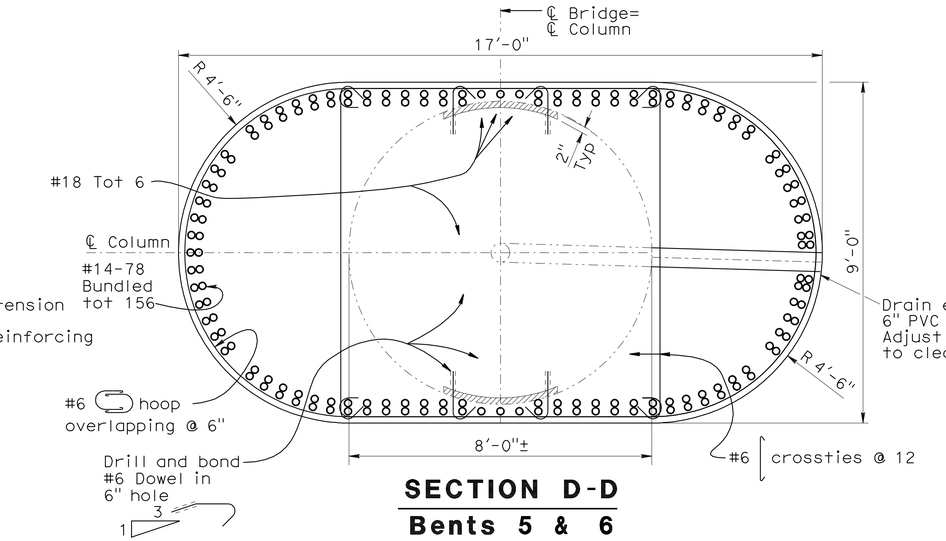

SECTION D-D
Bents 5 & 6
SCALE: ½" = 1'

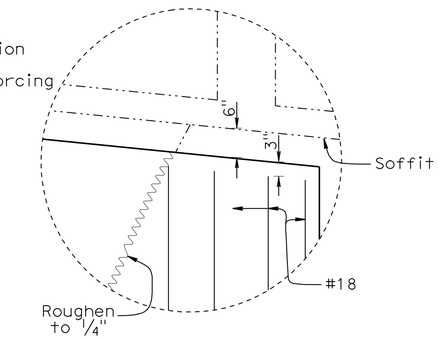

DETAIL "A"
Bents 4 to 6
No Scale

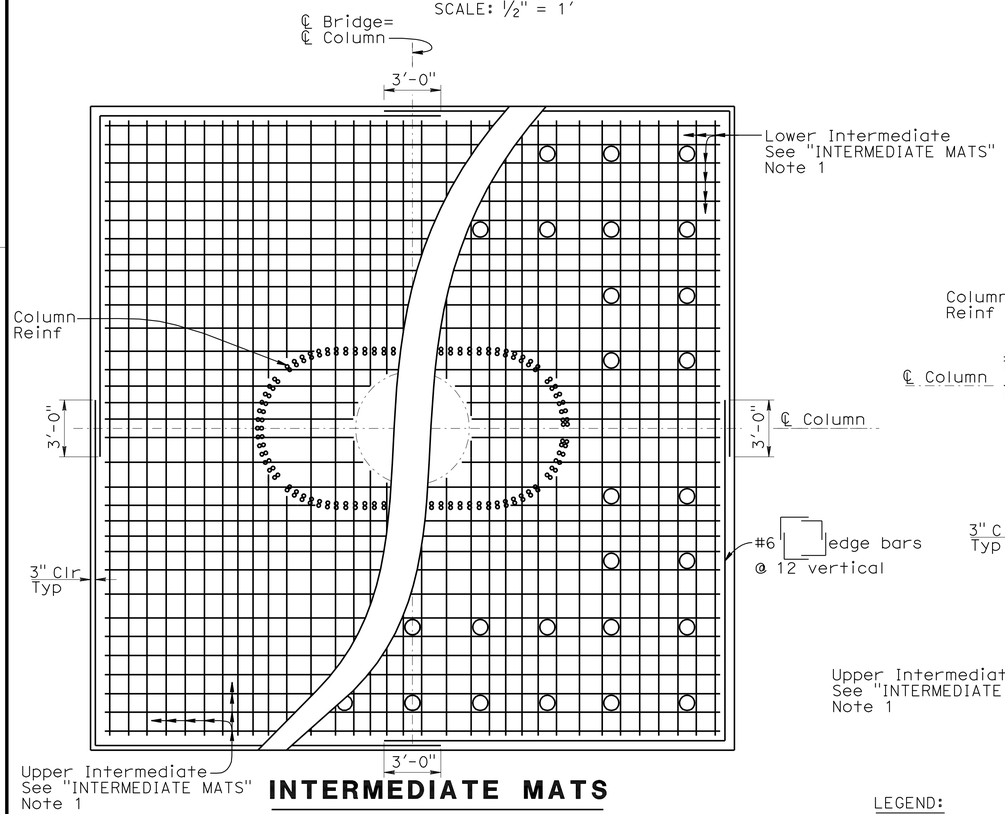

INTERMEDIATE MATS
Bent 4
SCALE: ¼" = 1'

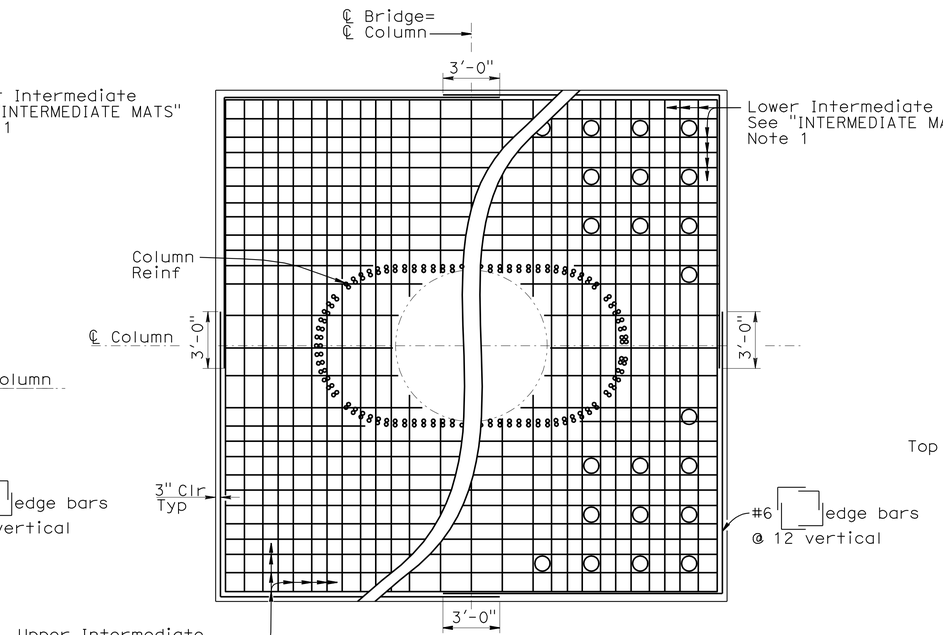

INTERMEDIATE MATS
Bent 5 Shown
Bent 6 Similar
SCALE: ¼" = 1'

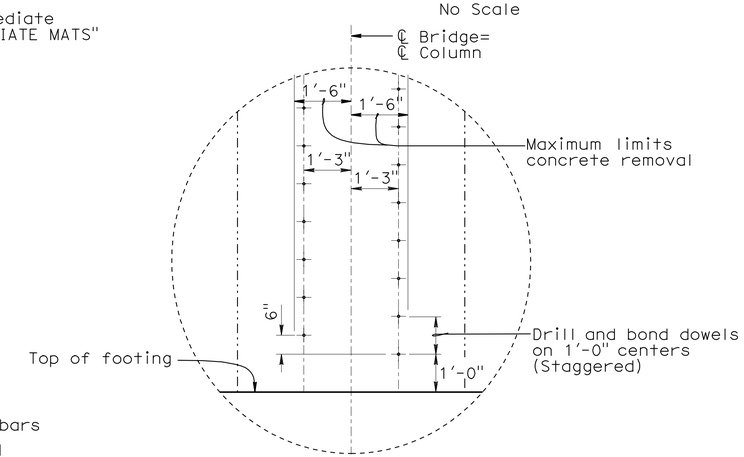

DOWEL LAYOUT
Bents 4 to 6
SCALE: ½" = 1'

NOTE: Bent 4 shown, Bents 5 and 6 similar

NOTE:
THE CONTRACTOR SHALL VERIFY ALL CONTROLLING FIELD DIMENSIONS BEFORE ORDERING OR FABRICATING ANY MATERIAL.

LEGEND:
- Denotes new construction
- Denotes existing structure
- Denotes limits concrete removal

NOTES:
1. For location of "SECTION A-A" see "BENT DETAILS No. 1" sheet.
2. For location "SECTION D-D" see "BENT DETAILS No. 2" and "BENT DETAILS No. 3" sheets.
3. For locaton "DETAIL "A"", "DOWEL LAYOUT" and "INTERMEDIATE MATS", see "BENT DETAILS No. 1", "BENT DETAILS No. 2", and "BENT DETAILS No. 3" sheets.
4. Reinforcement discontinuous at existing column.
5. Adjust intermediate mat spacing to clear column reinforcement and micropiles.

	BY	CHECKED
DESIGN	David Small	P. Lutz
DETAILS	P Carreon/D. Elliott	P. Lutz
QUANTITIES	David Small	P. Lutz

STATE OF CALIFORNIA
DEPARTMENT OF TRANSPORTATION

DIVISION OF ENGINEERING SERVICES
STRUCTURE DESIGN
DESIGN BRANCH 9

BRIDGE NO. 35-0245F
POST MILE 10.8

S280/E92 CONNECTOR (RETROFIT)
BENT DETAILS No. 4

STRUCTURES DESIGN DETAIL SHEET (ENGLISH) (REV. 10/25/05)

ORIGINAL SCALE IN INCHES FOR REDUCED PLANS 0 1 2 3

CU 04245
EA 1A7701

DISREGARD PRINTS BEARING EARLIER REVISION DATES

REVISION DATES: 04-04-09 4-08-09 10-14-10 10-21-10 10-25-10

SHEET 8 OF 20

FILE => 35-0245f-h-bent_det04.dgn

USERNAME => ttrstrk DATE PLOTTED => 20-JAN-2011 TIME PLOTTED => 10:28

DIST	COUNTY	ROUTE	POST MILES TOTAL PROJECT	SHEET No	TOTAL SHEETS
04	SM	280	10.7/11.0	72	83

REGISTERED CIVIL ENGINEER 12-15-10 DATE

1-18-11
PLANS APPROVAL DATE

REGISTERED PROFESSIONAL ENGINEER PHILIP E. LUTZ No. C55839 Exp. 12/31/12 CIVIL STATE OF CALIFORNIA

The State of California or its officers or agents shall not be responsible for the accuracy or completeness of electronic copies of this plan sheet.

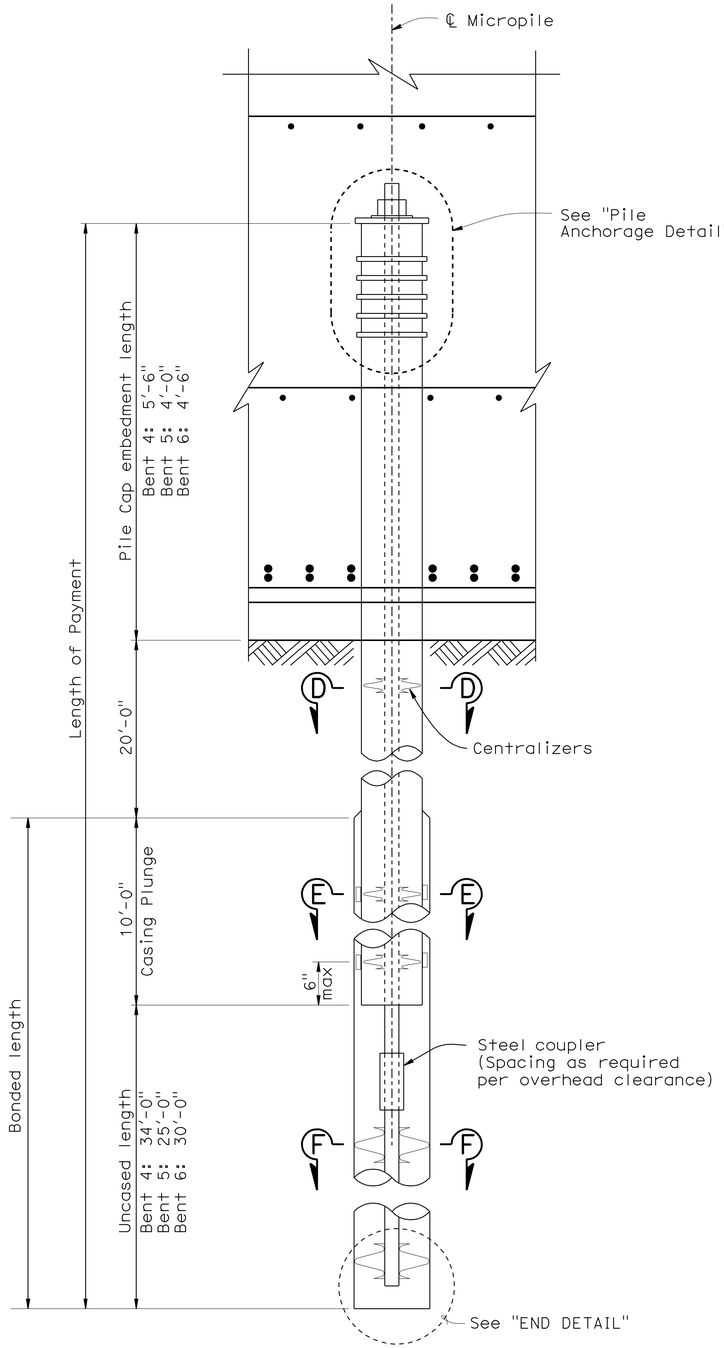

PILE DETAIL
SCALE: 1" = 1'

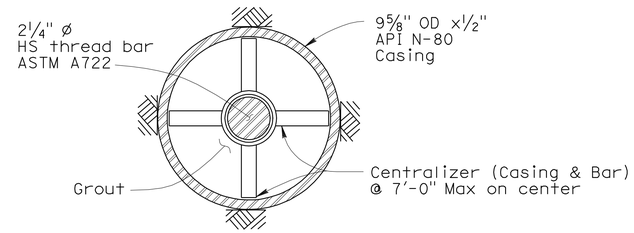

SECTION D-D
SCALE: 3" = 1'

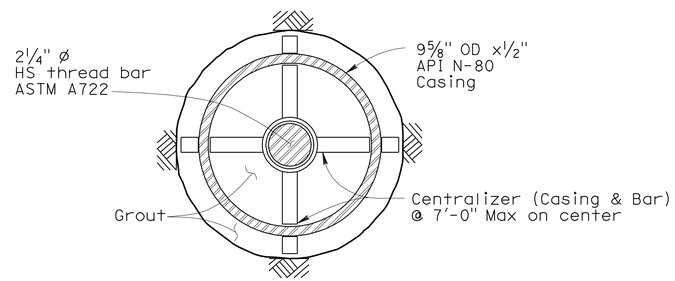

SECTION E-E
SCALE: 3" = 1'

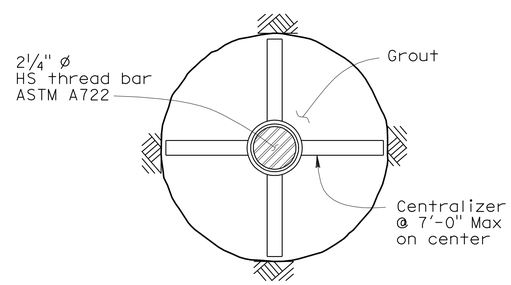

SECTION F-F
SCALE: 3" = 1'

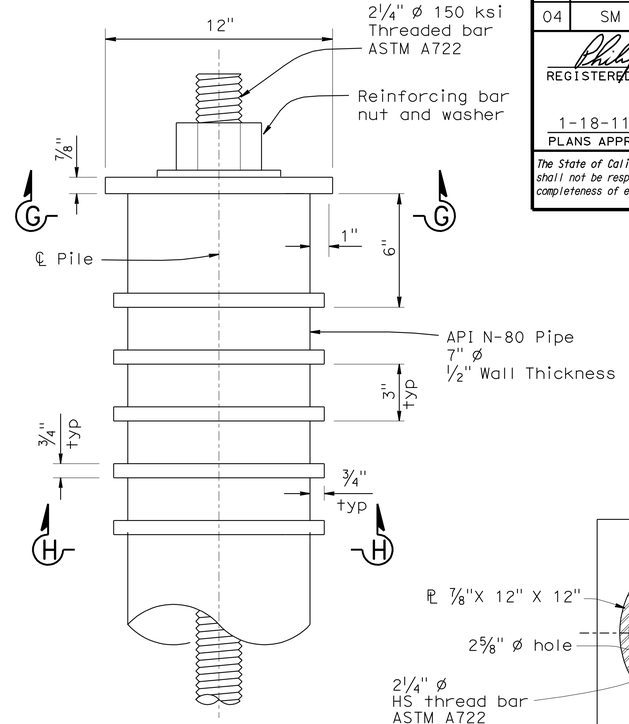

PILE DETAIL
SCALE: 3" = 1'

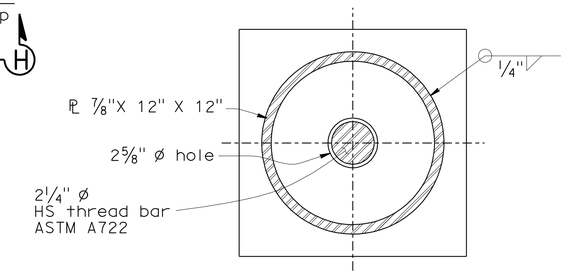

SECTION G-G
SCALE: 3" = 1'

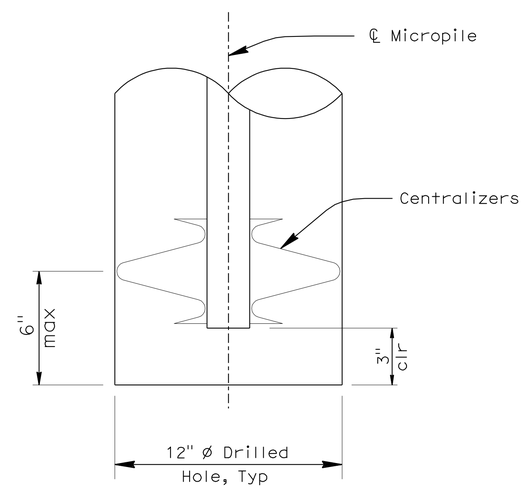

END DETAIL
SCALE: 3" = 1'

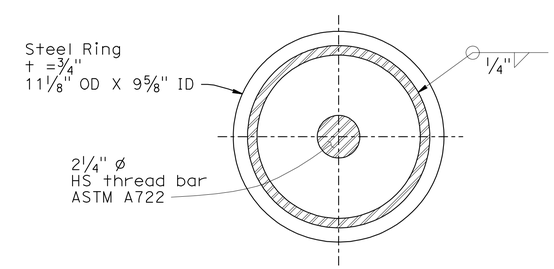

SECTION H-H
SCALE: 3" = 1'

NOTE:
THE CONTRACTOR SHALL VERIFY ALL CONTROLLING FIELD DIMENSIONS BEFORE ORDERING OR FABRICATING ANY MATERIAL.

	BY	CHECKED
DESIGN	P. Lutz	P. Lutz
DETAILS	P.Lutz	P. Lutz
QUANTITIES	David Small	P. Lutz

STATE OF CALIFORNIA DEPARTMENT OF TRANSPORTATION

DIVISION OF ENGINEERING SERVICES STRUCTURE DESIGN DESIGN BRANCH 9

BRIDGE NO. 35-0245F
POST MILE 10.8

S280/E92 CONNECTOR OC (RETROFIT)
MICROPILE DETAILS

STRUCTURES DESIGN DETAIL SHEET (ENGLISH) (REV. 10/25/05)

ORIGINAL SCALE IN INCHES FOR REDUCED PLANS 0 1 2 3

CU 04245
EA 1A7701

DISREGARD PRINTS BEARING EARLIER REVISION DATES

REVISION DATES: 4-10-09, 5-28-09, 6-09-09, 9-03-10, 10-21-10, 12-9-10, 12-10-10

SHEET 9 OF 20

FILE => 35-0245f-h-micropile details.dgn

USERNAME => tlstrk DATE PLOTTED => 20-JAN-2011 TIME PLOTTED => 10:35

DIST	COUNTY	ROUTE	POST MILES TOTAL PROJECT	SHEET No	TOTAL SHEETS
04	SM	280	10.7/11.0	73	83

REGISTERED CIVIL ENGINEER 12-15-10 DATE

1-18-11
PLANS APPROVAL DATE

REGISTERED PROFESSIONAL ENGINEER PHILIP E. LUTZ No. C55839 Exp. 12/31/12 CIVIL STATE OF CALIFORNIA

The State of California or its officers or agents shall not be responsible for the accuracy or completeness of electronic copies of this plan sheet.

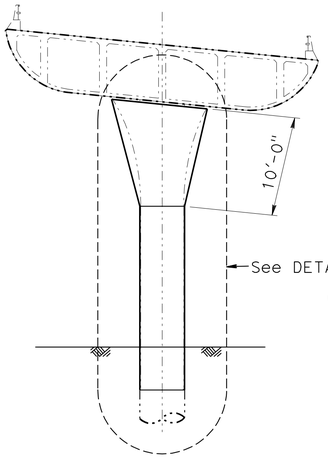

TYPICAL ELEVATION
Bents 2,3,7,8
SCALE: 1/8"= 1'

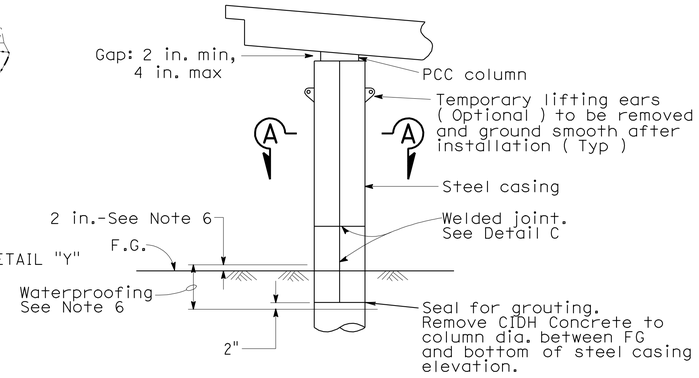

CLASS F COLUMN
DETAIL "Y"

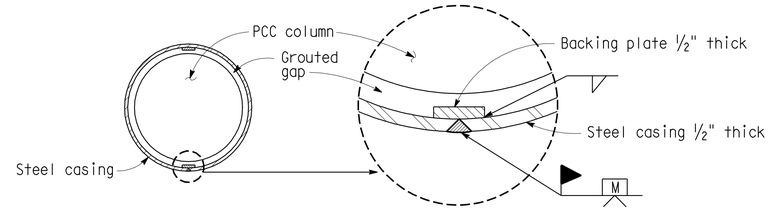

SECTION A-A
ROUND COLUMN
Minimum inside diameter of steel casing = 1 1/2" greater than nominal column diameter for Class F

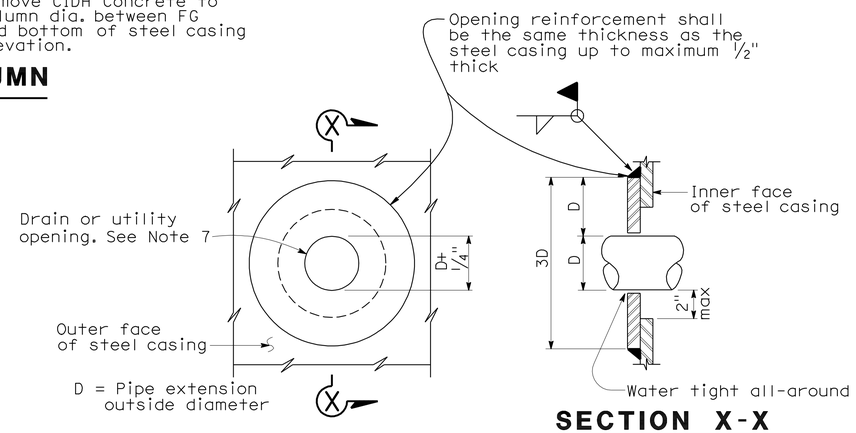

SECTION X-X
CASING OPENING
Note: Opening reinforcement required for drain or utility openings larger than 4 in.

Notes:

1) Inside surface to remain flush. Minimum clearance from PCC column to casings shall be maintained.
2) Appropriate injection nozzles to be provided on casing, but removed and ground flush following completion of grouting operation.
3) All voids between steel casings and polyethylene (Class P and Class P/F), and steel casing and PCC column (Class F) to be filled with grout.
4) Location and number of vertical and horizontal welds to be determined by the Contractor, and subject to the approval of the Engineeer. The locaction of casing welds are for illustration. No skip welds allowed.
5) Circular steel casing to be 1/2" thick minimum. Backing plates to be 1/2" thick.
6) Waterproofing limits for steel casings. Typical for Classes "P", "F" and "P/F".
7) For pipe extensions, opening shall be no more than 1/4" greater than the pipe extension diameter. For other openings, the opening diameter to be determined by the Engineer.
8) For top of column elevations see "FOUNDATION PLAN NO. 1" and "FOUNDATION PLAN NO. 2" sheets.

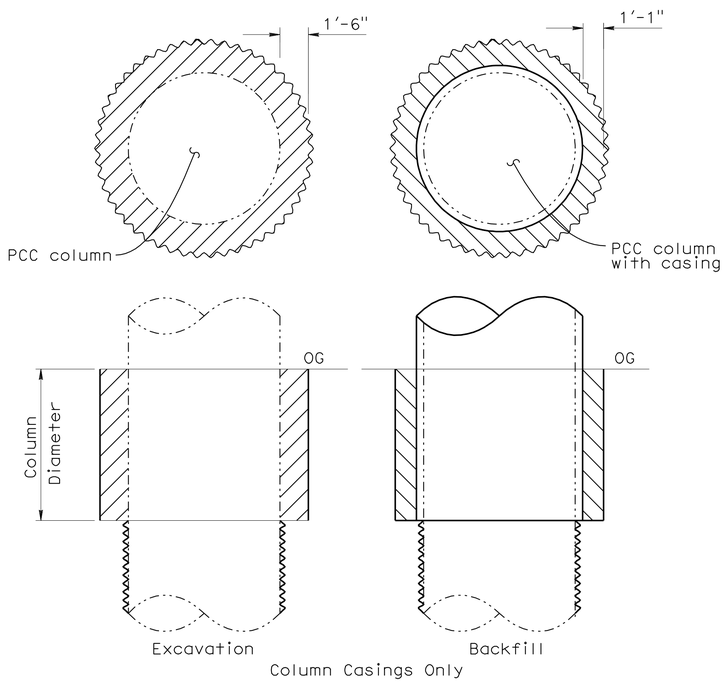

BENTS 2, 3, 7 AND 8

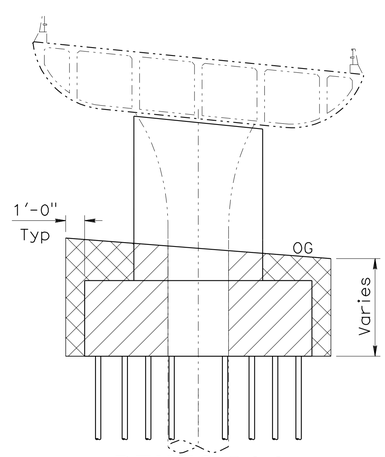

BENTS 5 & 6

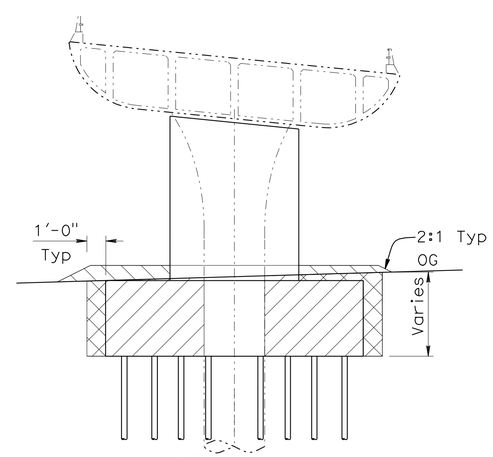

BENT 4

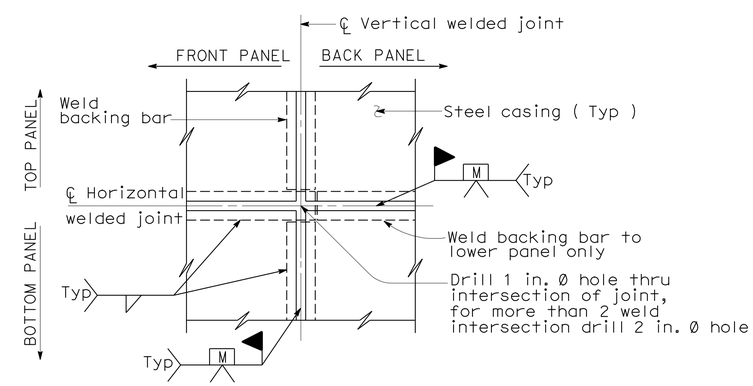

(TWO WELDED INTERSECTION JOINT)
DETAIL C

NOTE:
THE CONTRACTOR SHALL VERIFY ALL CONTROLLING FIELD DIMENSIONS BEFORE ORDERING OR FABRICATING ANY MATERIAL.

LIMITS OF PAYMENT FOR EXCAVATION AND BACKFILL
No Scale

LEGEND:
Excavation
Backfill
Denotes new construction
Denotes existing structure

	BY	CHECKED
DESIGN	David Small	P. Lutz
DETAILS	P Carreon	P. Lutz
QUANTITIES	David Small	P. Lutz

STATE OF CALIFORNIA
DEPARTMENT OF TRANSPORTATION

DIVISION OF ENGINEERING SERVICES
STRUCTURE DESIGN
DESIGN BRANCH 9

BRIDGE NO. 35-0245F
POST MILE 10.8

S280/E92 CONNECTOR OC (RETROFIT)
COLUMN DETAILS

STRUCTURES DESIGN DETAIL SHEET (ENGLISH) (REV. 10/25/05)

ORIGINAL SCALE IN INCHES FOR REDUCED PLANS 0 1 2 3

CU 04245
EA 1A7701

DISREGARD PRINTS BEARING EARLIER REVISION DATES
REVISION DATES: 04-04-09 04-14-09 10-21-10

SHEET 10 OF 20

FILE => 35-0245f-j-cdet01.dgn

USERNAME => trestrk DATE PLOTTED => 20-JAN-2011 TIME PLOTTED => 10:28

DIST	COUNTY	ROUTE	POST MILES TOTAL PROJECT	SHEET No	TOTAL SHEETS
04	SM	280	10.7/11.0	74	83

REGISTERED CIVIL ENGINEER 12-15-10 DATE

1-18-11
PLANS APPROVAL DATE

REGISTERED PROFESSIONAL ENGINEER PHILIP E. LUTZ No. C55839 Exp. 12/31/12 CIVIL STATE OF CALIFORNIA

The State of California or its officers or agents shall not be responsible for the accuracy or completeness of electronic copies of this plan sheet.

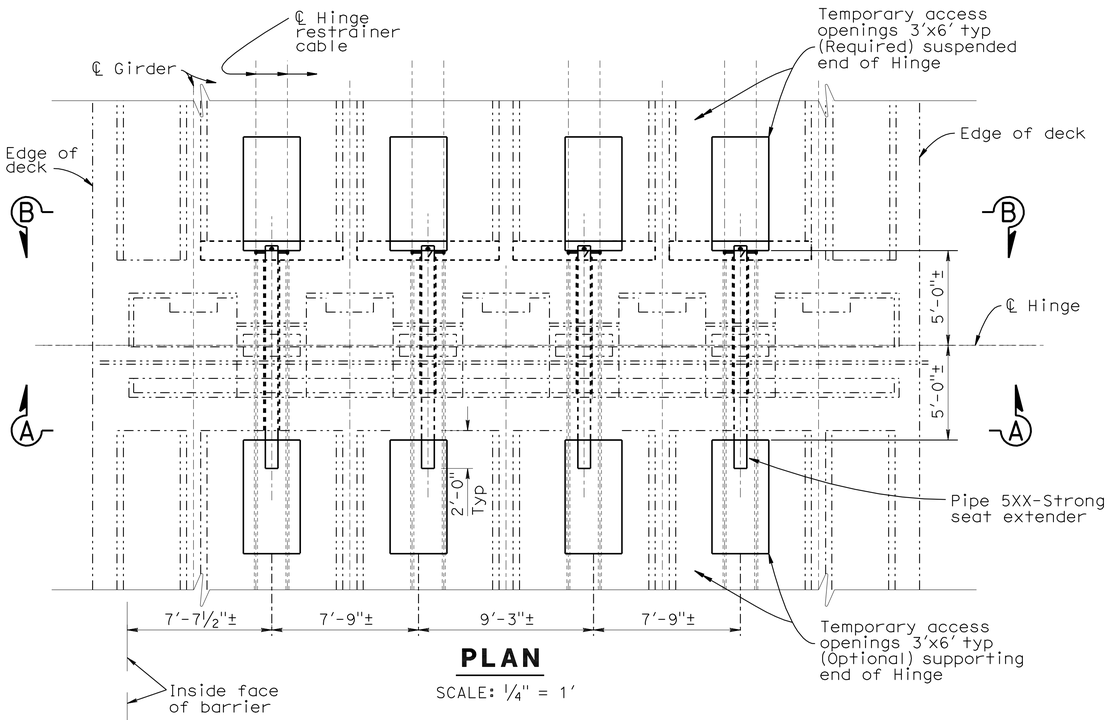

PLAN

SCALE: ¼" = 1'

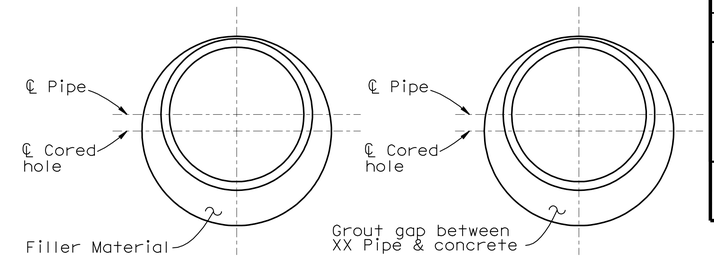

SECTION C-C

NO SCALE

SECTION D-D

NO SCALE

Note:
1. Shim pipe to top of cored hole prior to grouting
2. Upper section shown, lower similar.

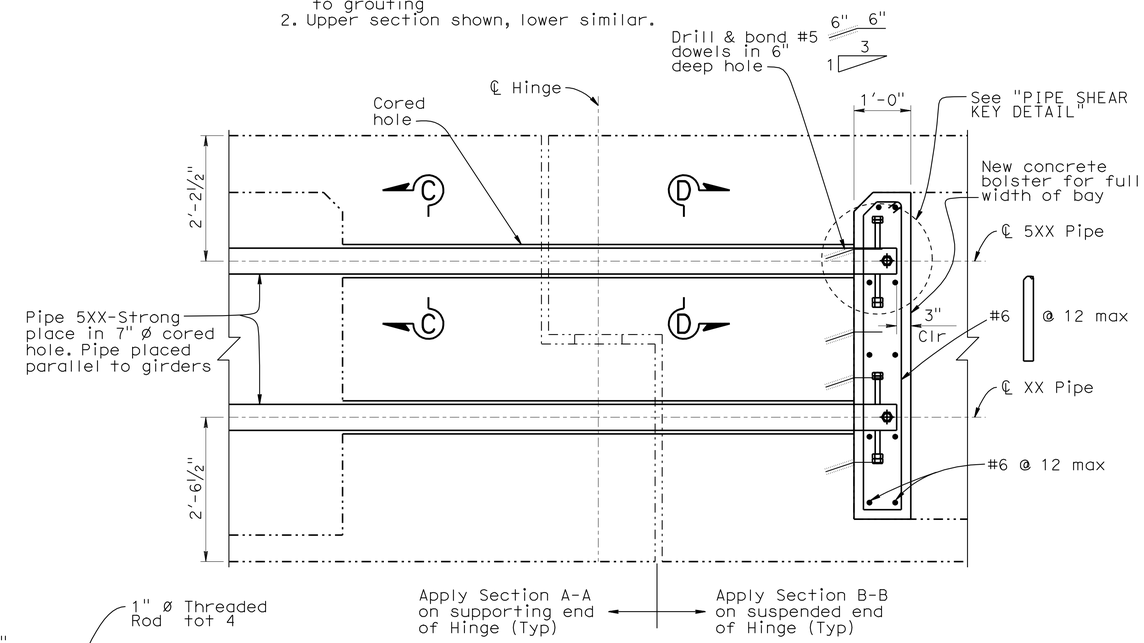

HINGE SECTION

SCALE: ¾" = 1'

NOTE:
Not all rebars were shown for clarity.

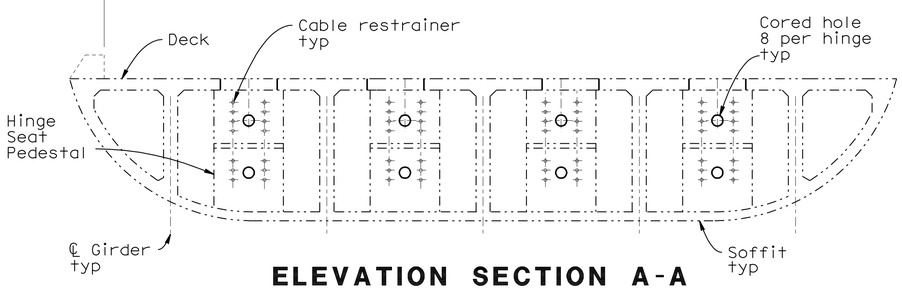

ELEVATION SECTION A-A

SCALE: ¼" = 1'

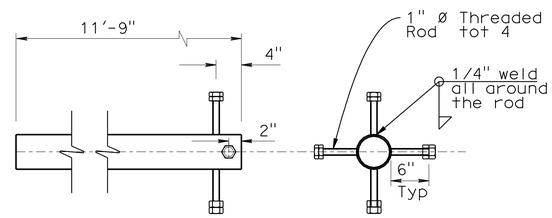

PIPE SHEAR KEY DETAIL

SCALE: 1" = 1'

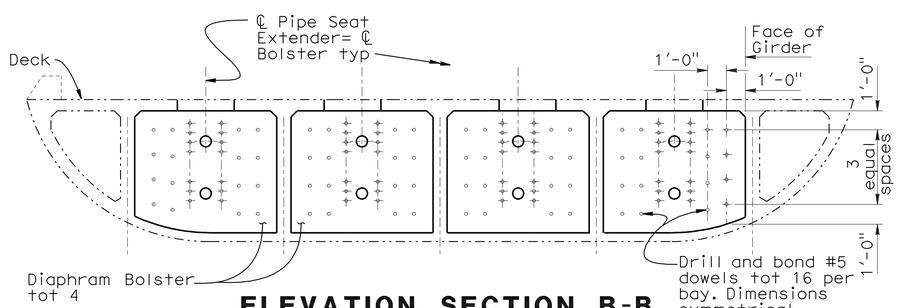

ELEVATION SECTION B-B

SCALE: ¼" = 1'

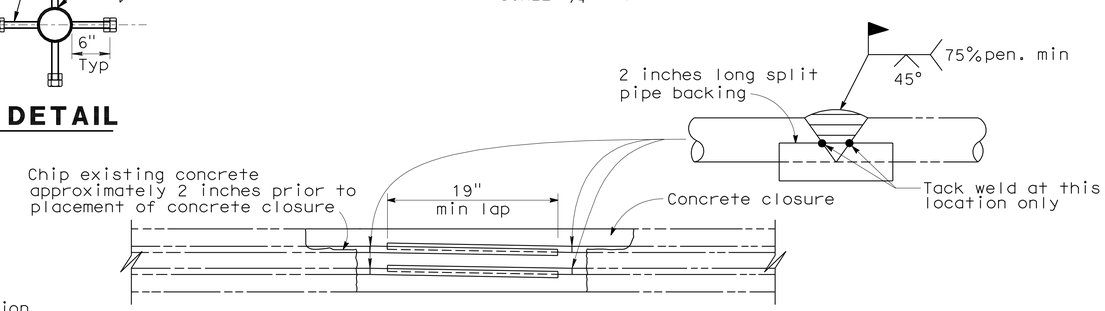

DECK ACCESS CLOSURE

NO SCALE

Note: Replace deck reinf each. Butt weld to existing.

NOTE:
THE CONTRACTOR SHALL VERIFY ALL CONTROLLING FIELD DIMENSIONS BEFORE ORDERING OR FABRICATING ANY MATERIAL.

Note:
——— Denotes new construction
-·-·-·- Denotes existing structure

	BY	CHECKED
DESIGN	David Small	P. Lutz
DETAILS	P Carreon/T. Fairall	P. Lutz
QUANTITIES	David Small	P. Lutz

STATE OF CALIFORNIA
DEPARTMENT OF TRANSPORTATION

DIVISION OF ENGINEERING SERVICES
STRUCTURE DESIGN
DESIGN BRANCH 9

BRIDGE NO. 35-0245F
POST MILE 10.8

S280/E92 CONNECTOR OC (RETROFIT)
SEAT EXTENDER DETAILS

STRUCTURES DESIGN DETAIL SHEET (ENGLISH) (REV. 10/25/05)

ORIGINAL SCALE IN INCHES FOR REDUCED PLANS 0 1 2 3

CU 04245
EA 1A7701

DISREGARD PRINTS BEARING EARLIER REVISION DATES

REVISION DATES: 04-04-09 04-14-09 04-16-09 5-05-09 10-21-10

SHEET 11 OF 20

FILE => 35-0245f-n-seat_det.dgn

USERNAME => trstrk DATE PLOTTED => 20-JAN-2011 TIME PLOTTED => 10:28

DIST	COUNTY	ROUTE	POST MILES TOTAL PROJECT	SHEET No	TOTAL SHEETS
04	SM	280	10.7/11.0	75	83

REGISTERED GEOLOGIST — DATE 07-15-09

REGISTERED GEOLOGIST Chris Risden No. 7795 Exp. 9-30-09 STATE OF CALIFORNIA

1-18-11
PLANS APPROVAL DATE

The State of California or its officers or agents shall not be responsible for the accuracy or completeness of electronic copies of this plan sheet.

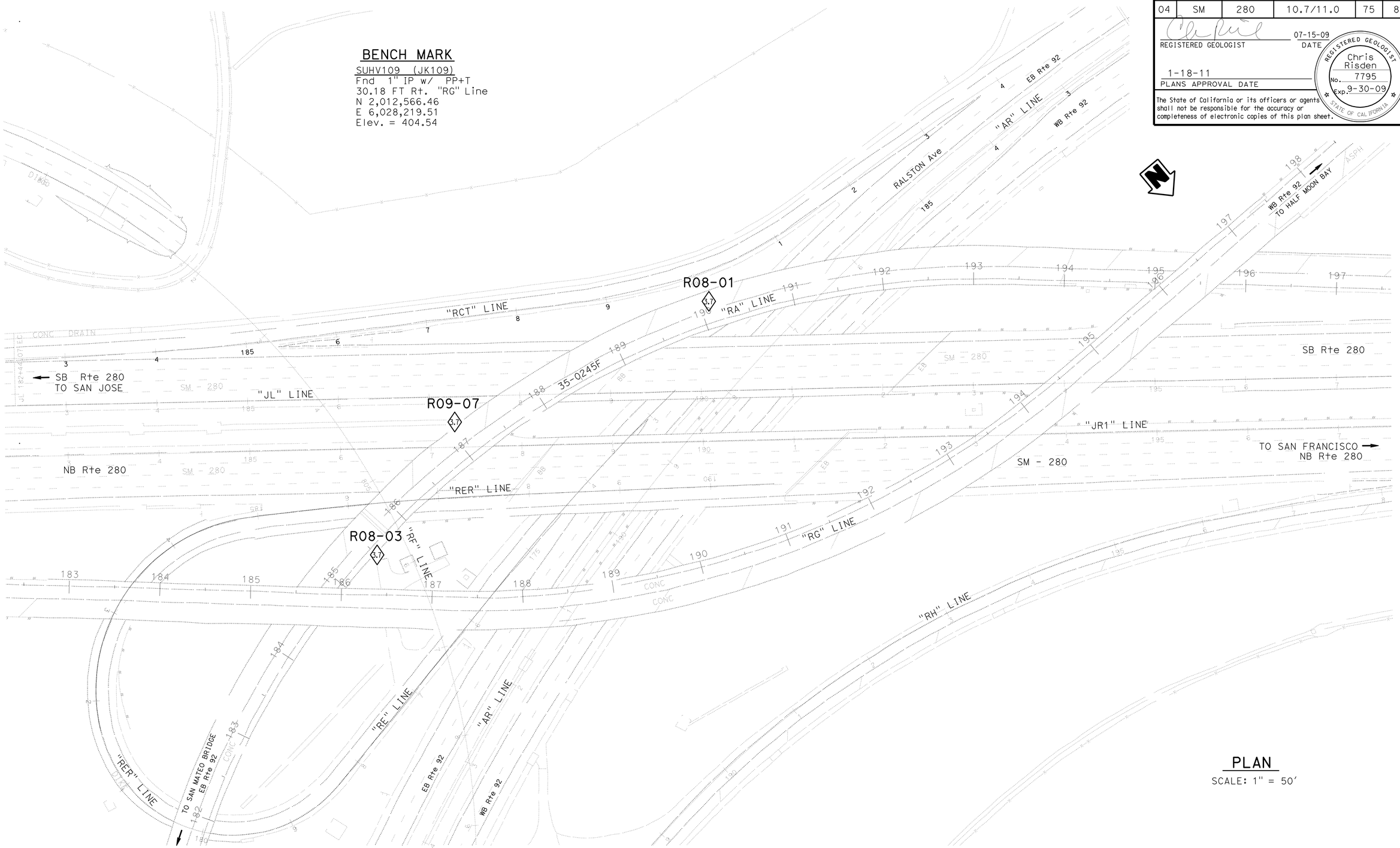

ENGINEERING SERVICES	GEOTECHNICAL SERVICES	STATE OF CALIFORNIA DEPARTMENT OF TRANSPORTATION	DIVISION OF ENGINEERING SERVICES OFFICE OF GEOTECHNICAL DESIGN BRANCH	BRIDGE NO. 35-0245F / POST MILES 10.2/10.7	S280/E92 CONNECTOR OC (RETROFIT) LOG OF TEST BORINGS 1 OF 9
FUNCTIONAL SUPERVISOR NAME: G. Wilcox	DRAWN BY: M. Reynolds 03/09 CHECKED BY: B. Price	FIELD INVESTIGATION BY: C. Risden			
OGS CIVIL LOG OF TEST BORINGS SHEET	ORIGINAL SCALE IN INCHES FOR REDUCED PLANS 0 1 2 3	CU 04 EA 1A7701	DISREGARD PRINTS BEARING EARLIER REVISION DATES	REVISION DATES	SHEET 12 OF 20

FILE => 35-0245f-z-1tb01.dgn

USERNAME => frstrk DATE PLOTTED => 20-JAN-2011 TIME PLOTTED => 10:28

BENCH MARK

SUHV109 (JK109)
Fnd 1" IP w/ PP+T
30.18 FT Rt. "RG" Line
N 2,012,566.46
E 6,028,219.51
Elev. = 404.54

(FOR BORING LOCATION SEE PLAN, LOTB SHEET 1 OF 9)

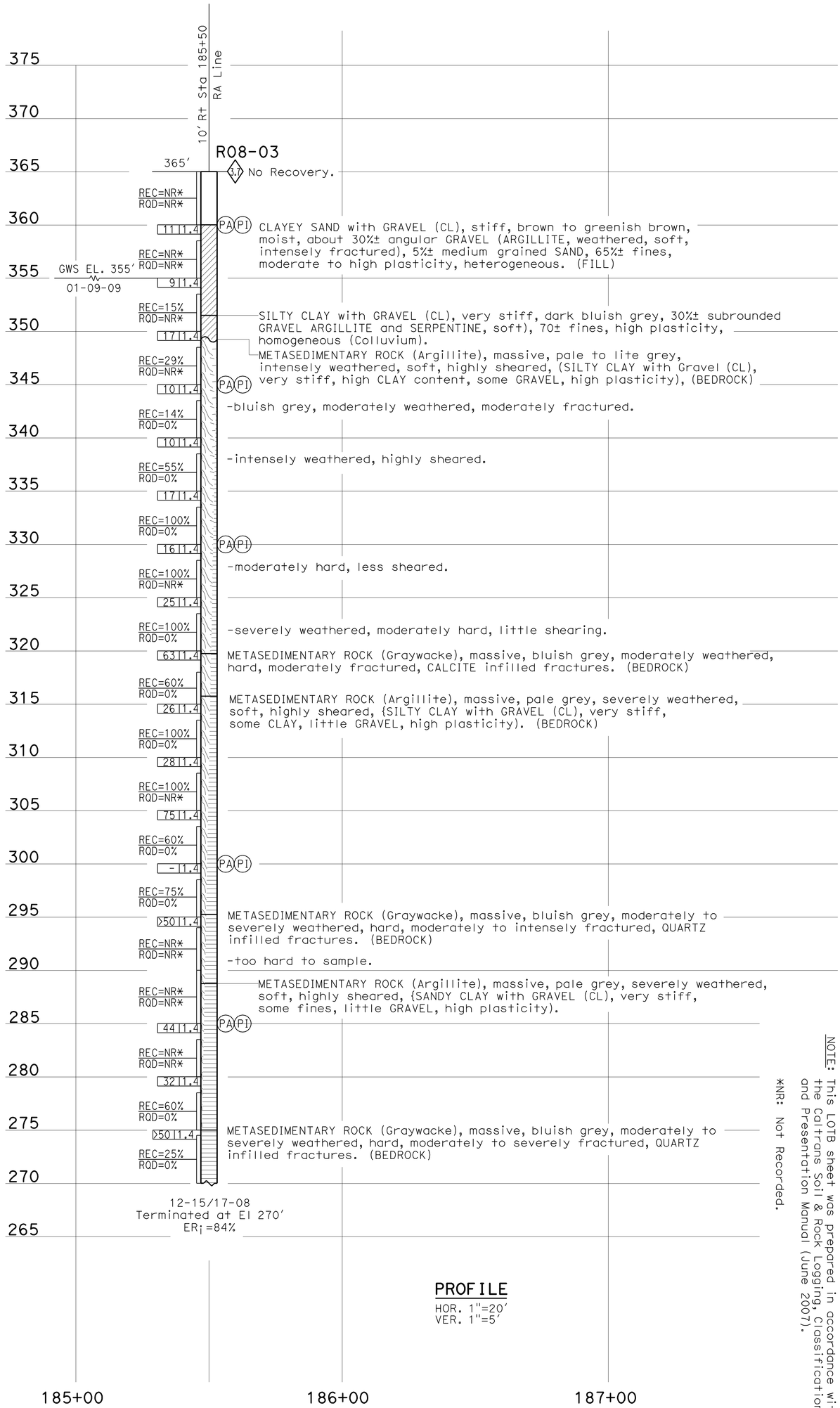

PROFILE

HOR. 1"=20'
VER. 1"=5'

NOTE: This LOTB sheet was prepared in accordance with the Caltrans Soil & Rock Logging, Classification, and Presentation Manual (June 2007).

*NR: Not Recorded.

REGISTERED GEOLOGIST
07-15-09
DATE
REGISTERED GEOLOGIST
Chris Risden
No. 7795
Exp. 9-30-09
STATE OF CALIFORNIA

1-18-11
PLANS APPROVAL DATE

The State of California or its officers or agents shall not be responsible for the accuracy or completeness of electronic copies of this plan sheet.

DIST	COUNTY	ROUTE	POST MILES TOTAL PROJECT	SHEET NO	TOTAL SHEETS
04	SM	280	10.7/11.0	76	83

ENGINEERING SERVICES
GEOTECHNICAL SERVICES

FUNCTIONAL SUPERVISOR
NAME: G. Wilcox

DRAWN BY: M. Reynolds 03/09
CHECKED BY: B. Price

FIELD INVESTIGATION BY:
Karpowicz

ORIGINAL SCALE IN INCHES FOR REDUCED PLANS
0 1 2 3

STATE OF CALIFORNIA
DEPARTMENT OF TRANSPORTATION

DIVISION OF ENGINEERING SERVICES
OFFICE OF GEOTECHNICAL
DESIGN BRANCH

CU 04
EA 1A7701

BRIDGE NO. 35-0245F
POST MILES 10.2/10.7

S280/E92 CONNECTOR OC (RETROFIT)

LOG OF TEST BORINGS 2 OF 9

SHEET 13 OF 20

DISREGARD PRINTS BEARING EARLIER REVISION DATES

REVISION DATES

ODS CIVIL LOG OF TEST BORINGS SHEET

FILE => 35-0245f-2-ltb02.dgn

USERNAME => trstrk DATE PLOTTED => 20-JAN-2011 TIME PLOTTED => 10:28

BENCH MARK

SUHV109 (JK109)
Fnd 1" IP w/ PP+T
30.18 FT Rt. "RG" Line
N 2,012,566.46
E 6,028,219.51
Elev. = 404.54

(FOR BORING LOCATION SEE PLAN, LOTB SHEET 1 OF 9)

PROFILE

HOR. 1"=20'
VER. 1"=5'

ENGINEERING SERVICES

GEOTECHNICAL SERVICES

FUNCTIONAL SUPERVISOR
NAME: G. Wilcox

DRAWN BY: M. Reynolds 03/09
CHECKED BY: B. Price

FIELD INVESTIGATION BY:
C. Risden

STATE OF CALIFORNIA
DEPARTMENT OF TRANSPORTATION

DIVISION OF ENGINEERING SERVICES
OFFICE OF GEOTECHNICAL
DESIGN BRANCH

CU 04
EA 1A7701

BRIDGE NO. 35-0245F
POST MILES 10.2/10.7

S280/E92 CONNECTOR OC (RETROFIT)

LOG OF TEST BORINGS 3 OF 9

SHEET 14 OF 20

REGISTERED GEOLOGIST
07-15-09
DATE
Chris Risden
No. 7795
Exp. 9-30-09
STATE OF CALIFORNIA

1-18-11
PLANS APPROVAL DATE

The State of California or its officers or agents shall not be responsible for the accuracy or completeness of electronic copies of this plan sheet.

DIST	COUNTY	ROUTE	POST MILES TOTAL PROJECT	SHEET NO	TOTAL SHEETS
04	SM	280	10.7/11.0	77	83

ODS CIVIL LOG OF TEST BORINGS SHEET

ORIGINAL SCALE IN INCHES FOR REDUCED PLANS 0 1 2 3

DISREGARD PRINTS BEARING EARLIER REVISION DATES

REVISION DATES

FILE => 35-0245f-2-ltb03.dgn

USERNAME => trstrk DATE PLOTTED => 20-JAN-2011 TIME PLOTTED => 10:29

DIST	COUNTY	ROUTE	POST MILES TOTAL PROJECT	SHEET No	TOTAL SHEETS
04	SM	280	10.7/11.0	78	83

REGISTERED GEOLOGIST — DATE 07-15-09

REGISTERED GEOLOGIST Chris Risden No. 7795 Exp. 9-30-09 STATE OF CALIFORNIA

1-18-11
PLANS APPROVAL DATE

The State of California or its officers or agents shall not be responsible for the accuracy or completeness of electronic copies of this plan sheet.

BENCH MARK
SUHV109 (JK109)
Fnd T" IP w/ PP+T
30.18 FT Rt. "RG" Line
N 2,012,566.46
E 6,028,219.51
Elev. = 404.54

(FOR BORING LOCATION SEE PLAN, LOTB SHEET 1 OF 9)

NOTE: *NR: Not Recorded.

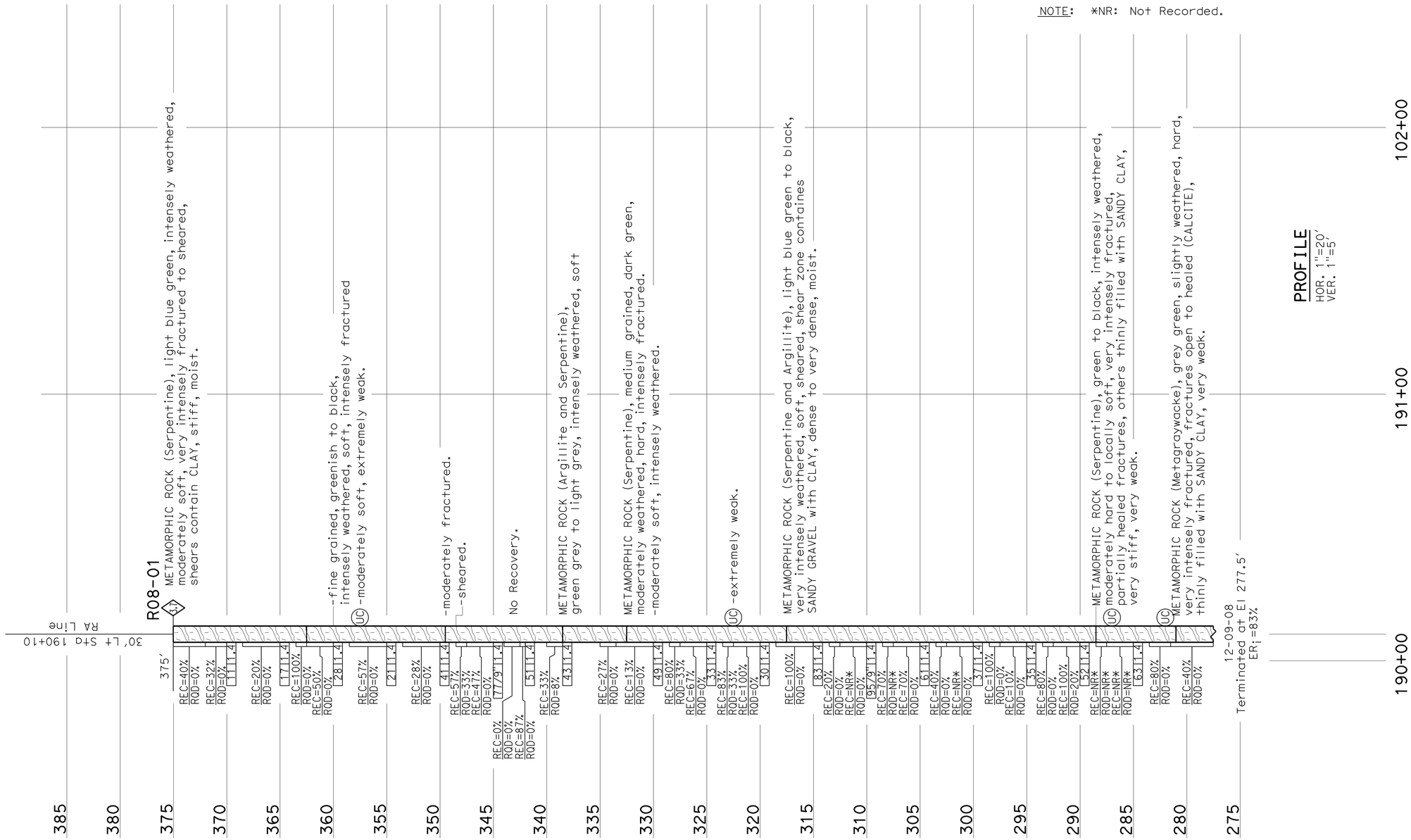

ENGINEERING SERVICES	GEOTECHNICAL SERVICES	STATE OF CALIFORNIA DEPARTMENT OF TRANSPORTATION	DIVISION OF ENGINEERING SERVICES OFFICE OF GEOTECHNICAL DESIGN BRANCH	BRIDGE NO. 35-0245F	S280/E92 CONNECTOR OC (RETROFIT)
FUNCTIONAL SUPERVISOR	DRAWN BY: M. Reynolds 03/09	FIELD INVESTIGATION BY: R. Nashed, A. Kaddoura, C. Risden		POST MILES 10.2/10.7	LOG OF TEST BORINGS 4 OF 9
NAME: G. Wilcox	CHECKED BY: B. Price				

OGS CIVIL LOG OF TEST BORINGS SHEET

ORIGINAL SCALE IN INCHES FOR REDUCED PLANS 0 1 2 3

CU 04
EA 1A7701

DISREGARD PRINTS BEARING EARLIER REVISION DATES

REVISION DATES

SHEET 15 OF 20

FILE => 35-0245f-z-1tb04.dgn

USERNAME => frstrk DATE PLOTTED => 20-JAN-2011 TIME PLOTTED => 10:23

REGISTERED GEOLOGIST 07-15-09 DATE

1-18-11
PLANS APPROVAL DATE

REGISTERED GEOLOGIST Chris Risden No. 7795 Exp. 9-30-09 STATE OF CALIFORNIA

The State of California or its officers or agents shall not be responsible for the accuracy or completeness of electronic copies of this plan sheet.

REFERENCE: CALTRANS SOIL & ROCK LOGGING, CLASSIFICATION, AND PRESENTATION MANUAL (JUNE 2007)

CEMENTATION

Description	Criteria
Weak	Crumbles or breaks with handling or little finger pressure.
Moderate	Crumbles or breaks with considerable finger pressure.
Strong	Will not crumble or break with finger pressure.

CONSISTENCY OF COHESIVE SOILS

Description	Unconfined Compressive Strength (tsf)	Pocket Penetrometer Measurement (tsf)	Torvane Measurement (tsf)	Field Approximation
Very Soft	< 0.25	< 0.25	< 0.12	Easily penetrated several inches by fist
Soft	0.25 to 0.50	0.25 to 0.50	0.12 to 0.25	Easily penetrated several inches by thumb
Medium Stiff	0.50 to 1.0	0.50 to 1.0	0.25 to 0.50	Penetrated several inches by thumb with moderate effort
Stiff	1 to 2	1 to 2	0.50 to 1.0	Readily indented by thumb but penetrated only with great effort
Very Stiff	2 to 4	2 to 4	1.0 to 2.0	Readily indented by thumbnail
Hard	> 4.0	> 4.0	> 2.0	Indented by thumbnail with difficulty

BOREHOLE IDENTIFICATION

Symbol	Hole Type	Description
Size	A	Auger Boring
Size	R P	Rotary drilled boring Rotary percussion boring (air)
Size	R	Rotary drilled diamond core
Size	HD HA	Hand driven (1-inch soil tube) Hand Auger
●	D	Dynamic Cone Penetration Boring
▲	CPT	Cone Penetration Test (ASTM D 5778-95)
⬚	O	Other

Note: Size in inches.

PLASTICITY OF FINE-GRAINED SOILS

Description	Criteria
Nonplastic	A 1/8-inch thread cannot be rolled at any water content.
Low	The thread can barely be rolled and the lump cannot be formed when drier than the plastic limit.
Medium	The thread is easy to roll and not much time is required to reach the plastic limit. The thread cannot be rerolled after reaching the plastic limit. The lump crumbles when drier than the plastic limit.
High	It takes considerable time rolling and kneading to reach the plastic limit. The thread can be rerolled several times after reaching the plastic limit. The lump can be formed without crumbling when drier than the plastic limit.

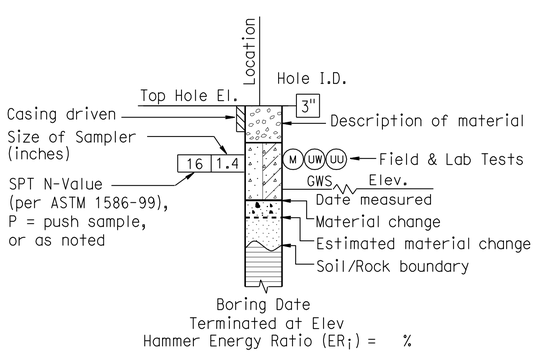

ROTARY BORING

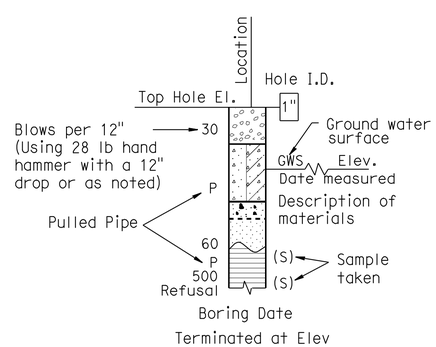

HAND BORING

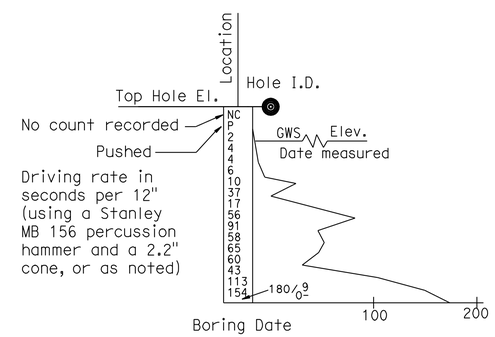

DYNAMIC CONE PENETRATION BORING

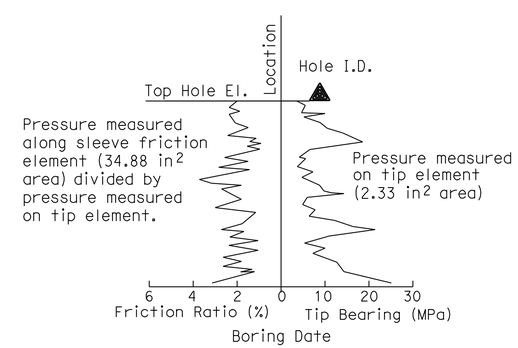

CONE PENETRATION TEST (CPT) SOUNDING

ENGINEERING SERVICES	GEOTECHNICAL SERVICES	STATE OF CALIFORNIA DEPARTMENT OF TRANSPORTATION	DIVISION OF ENGINEERING SERVICES OFFICE OF GEOTECHNICAL DESIGN BRANCH	BRIDGE NO. 35-0245F	SOIL LEGEND
PREPARED BY M. Reynolds 06/09				POST MILE 10.2/10.7	LOG OF TEST BORINGS 5 OF 9
CHECKED BY B. Price	C. Risden				

GS LOTB SOIL LEGEND

ORIGINAL SCALE IN INCHES FOR REDUCED PLANS 0 1 2 3

CU 04
EA 1A7701

DISREGARD PRINTS BEARING EARLIER REVISION DATES

REVISION DATES

SHEET 16 OF 20

FILE => 35-0245f-z-ltb05.dgn

USERNAME => ttistrk DATE PLOTTED => 20-JAN-2011 TIME PLOTTED => 10:29

REFERENCE: CALTRANS SOIL & ROCK LOGGING, CLASSIFICATION, AND PRESENTATION MANUAL (JUNE 2007)

DIST	COUNTY	ROUTE	POST MILES TOTAL PROJECT	SHEET No	TOTAL SHEETS
04	SM	280	10.7/11.0	80	83

REGISTERED GEOLOGIST — DATE 07-15-09

1-18-11
PLANS APPROVAL DATE

REGISTERED GEOLOGIST Chris Risden No. 7795 Exp. 9-30-09 STATE OF CALIFORNIA

The State of California or its officers or agents shall not be responsible for the accuracy or completeness of electronic copies of this plan sheet.

GROUP SYMBOLS AND NAMES

Graphic/Symbol	Group Names	Graphic/Symbol	Group Names
GW	Well-graded GRAVEL Well-graded GRAVEL with SAND	CL	Lean CLAY Lean CLAY with SAND Lean CLAY with GRAVEL SANDY lean CLAY SANDY lean CLAY with GRAVEL GRAVELLY lean CLAY GRAVELLY lean CLAY with SAND
GP	Poorly graded GRAVEL Poorly graded GRAVEL with SAND		
GW-GM	Well-graded GRAVEL with SILT Well-graded GRAVEL with SILT and SAND	CL-ML	SILTY CLAY SILTY CLAY with SAND SILTY CLAY with GRAVEL SANDY SILTY CLAY SANDY SILTY CLAY with GRAVEL GRAVELLY SILTY CLAY GRAVELLY SILTY CLAY with SAND
GW-GC	Well-graded GRAVEL with CLAY (or SILTY CLAY) Well-graded GRAVEL with CLAY and SAND (or SILTY CLAY and SAND)		
GP-GM	Poorly graded GRAVEL with SILT Poorly graded GRAVEL with SILT and SAND	ML	SILT SILT with SAND SILT with GRAVEL SANDY SILT SANDY SILT with GRAVEL GRAVELLY SILT GRAVELLY SILT with SAND
GP-GC	Poorly graded GRAVEL with CLAY (or SILTY CLAY) Poorly graded GRAVEL with CLAY and SAND (or SILTY CLAY and SAND)		
GM	SILTY GRAVEL SILTY GRAVEL with SAND	OL	ORGANIC lean CLAY ORGANIC lean CLAY with SAND ORGANIC lean CLAY with GRAVEL SANDY ORGANIC lean CLAY SANDY ORGANIC lean CLAY with GRAVEL GRAVELLY ORGANIC lean CLAY GRAVELLY ORGANIC lean CLAY with SAND
GC	CLAYEY GRAVEL CLAYEY GRAVEL with SAND		
GC-GM	SILTY, CLAYEY GRAVEL SILTY, CLAYEY GRAVEL with SAND	OL	ORGANIC SILT ORGANIC SILT with SAND ORGANIC SILT with GRAVEL SANDY ORGANIC SILT SANDY ORGANIC SILT with GRAVEL GRAVELLY ORGANIC SILT GRAVELLY ORGANIC SILT with SAND
SW	Well-graded SAND Well-graded SAND with GRAVEL		
SP	Poorly graded SAND Poorly graded SAND with GRAVEL	CH	Fat CLAY Fat CLAY with SAND Fat CLAY with GRAVEL SANDY fat CLAY SANDY fat CLAY with GRAVEL GRAVELLY fat CLAY GRAVELLY fat CLAY with SAND
SW-SM	Well-graded SAND with SILT Well-graded SAND with SILT and GRAVEL		
SW-SC	Well-graded SAND with CLAY (or SILTY CLAY) Well-graded SAND with CLAY and GRAVEL (or SILTY CLAY and GRAVEL)	MH	Elastic SILT Elastic SILT with SAND Elastic SILT with GRAVEL SANDY elastic SILT SANDY elastic SILT with GRAVEL GRAVELLY elastic SILT GRAVELLY elastic SILT with SAND
SP-SM	Poorly graded SAND with SILT Poorly graded SAND with SILT and GRAVEL		
SP-SC	Poorly graded SAND with CLAY (or SILTY CLAY) Poorly graded SAND with CLAY and GRAVEL (or SILTY CLAY and GRAVEL)	OH	ORGANIC fat CLAY ORGANIC fat CLAY with SAND ORGANIC fat CLAY with GRAVEL SANDY ORGANIC fat CLAY SANDY ORGANIC fat CLAY with GRAVEL GRAVELLY ORGANIC fat CLAY GRAVELLY ORGANIC fat CLAY with SAND
SM	SILTY SAND SILTY SAND with GRAVEL		
SC	CLAYEY SAND CLAYEY SAND with GRAVEL	OH	ORGANIC elastic SILT ORGANIC elastic SILT with SAND ORGANIC elastic SILT with GRAVEL SANDY ORGANIC elastic SILT SANDY ORGANIC elastic SILT with GRAVEL GRAVELLY ORGANIC elastic SILT GRAVELLY ORGANIC elastic SILT with SAND
SC-SM	SILTY, CLAYEY SAND SILTY, CLAYEY SAND with GRAVEL		
PT	PEAT	OL/OH	ORGANIC SOIL ORGANIC SOIL with SAND ORGANIC SOIL with GRAVEL SANDY ORGANIC SOIL SANDY ORGANIC SOIL with GRAVEL GRAVELLY ORGANIC SOIL GRAVELLY ORGANIC SOIL with SAND
	COBBLES COBBLES and BOULDERS BOULDERS		

FIELD AND LABORATORY TESTING

- (C) Consolidation (ASTM D 2435)
- (CL) Collapse Potential (ASTM D 5333)
- (CP) Compaction Curve (CTM 216)
- (CR) Corrosivity Testing (CTM 643, CTM 422, CTM 417)
- (CU) Consolidated Undrained Triaxial (ASTM D 4767)
- (DS) Direct Shear (ASTM D 3080)
- (EI) Expansion Index (ASTM D 4829)
- (M) Moisture Content (ASTM D 2216)
- (OC) Organic Content-% (ASTM D 2974)
- (P) Permeability (CTM 220)
- (PA) Particle Size Analysis (ASTM D 422)
- (PI) Plasticity Index (AASHTO T 90) Liquid Limit (AASHTO T 89)
- (PL) Point Load Index (ASTM D 5731)
- (PM) Pressure Meter
- (PP) Pocket Penetrometer
- (R) R-Value (CTM 301)
- (SE) Sand Equivalent (CTM 217)
- (SG) Specific Gravity (AASHTO T 100)
- (SL) Shrinkage Limit (ASTM D 427)
- (SW) Swell Potential (ASTM D 4546)
- (TV) Pocket Torvane
- (UC) Unconfined Compression-Soil (ASTM D 2166) Unconfined Compression-Rock (ASTM D 2938)
- (UU) Unconsolidated Undrained Triaxial (ASTM D 2850)
- (UW) Unit Weight (ASTM D 4767)
- (VS) Vane Shear (AASHTO T 223)

APPARENT DENSITY OF COHESIONLESS SOILS

Description	SPT N_{60} (Blows / 12 inches)
Very loose	0 - 4
Loose	5 - 10
Medium Dense	11 - 30
Dense	31 - 50
Very Dense	> 50

MOISTURE

Description	Criteria
Dry	Absence of moisture, dusty, dry to the touch
Moist	Damp but no visible water
Wet	Visible free water, usually soil is below water table

PERCENT OR PROPORTION OF SOILS

Description	Criteria
Trace	Particles are present but estimated to be less than 5%
Few	5 to 10%
Little	15 to 25%
Some	30 to 45%
Mostly	50 to 100%

PARTICLE SIZE

Description		Size
Boulder		> 12"
Cobble		3" to 12"
Gravel	Coarse	3/4" to 3"
	Fine	No. 4 to 3/4"
Sand	Coarse	No. 10 to No. 4
	Medium	No. 40 to No. 10
	Fine	No. 200 to No. 40

ENGINEERING SERVICES		GEOTECHNICAL SERVICES
PREPARED BY	M. Reynolds 06/09	
CHECKED BY	B. Price	C. Risden

STATE OF CALIFORNIA DEPARTMENT OF TRANSPORTATION

DIVISION OF ENGINEERING SERVICES OFFICE OF GEOTECHNICAL DESIGN BRANCH

BRIDGE NO. 35-0245F
POST MILE 10.2/10.7

SOIL LEGEND
LOG OF TEST BORINGS 6 OF 9

GS LOTB SOIL LEGEND

ORIGINAL SCALE IN INCHES FOR REDUCED PLANS 0 1 2 3

CU 04
EA 1A7701

DISREGARD PRINTS BEARING EARLIER REVISION DATES

REVISION DATES

SHEET 17 OF 20

FILE => 35-0245f-z-1tb06.dgn

USERNAME => tfstfk DATE PLOTTED => 20-JAN-2011 TIME PLOTTED => 10:29

REFERENCE: CALTRANS SOIL & ROCK LOGGING, CLASSIFICATION, AND PRESENTATION MANUAL (JUNE 2007)

DIST	COUNTY	ROUTE	POST MILES TOTAL PROJECT	SHEET No	TOTAL SHEETS
04	SM	280	10.7/11.0	81	83

REGISTERED GEOLOGIST — DATE 07-15-09

1-18-11
PLANS APPROVAL DATE

REGISTERED GEOLOGIST Chris Risden No. 7795 Exp. 9-30-09 STATE OF CALIFORNIA

The State of California or its officers or agents shall not be responsible for the accuracy or completeness of electronic copies of this plan sheet.

PERCENT CORE RECOVERY (REC) & ROCK QUALITY DESIGNATION (RQD)

$$REC = \frac{\sum \text{Length of the recovered core pieces (inches)}}{\text{Total length of core run (inches)}} \times 100\%$$

$$RQD = \frac{\sum \text{Length of intact core pieces} \geq 4''}{\text{Total length of core run (inches)}} \times 100\%$$

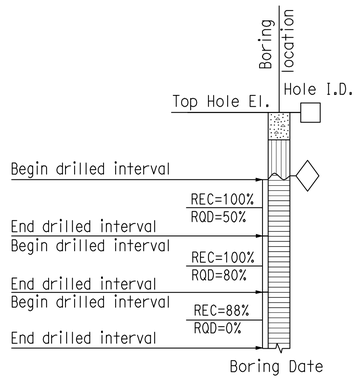

RELATIVE STRENGTH OF INTACT ROCK

Term	Uniaxial Compressive Strength (PSI)
Extremely Strong	> 30,000
Very Strong	14,500 - 30,000
Strong	7,000 - 14,500
Medium Strong	3,500 - 7,000
Weak	700 - 3,500
Very Weak	150 - 700
Extremely Weak	< 150

BEDDING SPACING

Description	Thickness / Spacing
Massive	Greater than 10 ft
Very thickly bedded	3 to 10 ft
Thickly bedded	1 to 3 ft
Moderately bedded	3-5/8" to 1 ft
Thinly bedded	1-1/4" to 3-5/8"
Very thinly bedded	3/8" to 1-1/4"
Laminated	Less than 3/8"

LEGEND OF ROCK MATERIALS

- IGNEOUS ROCK
- SEDIMENTARY ROCK
- METAMORPHIC ROCK

ROCK HARDNESS

Description	Criteria
Extremely Hard	Specimen cannot be scratched with a pocket knife or sharp pick; can only be chipped with repeated heavy hammer blows.
Very Hard	Specimen cannot be scratched with a pocket knife or sharp pick. Breaks with repeated heavy hammer blows.
Hard	Specimen can be scratched with a pocket knife or sharp pick with difficulty (heavy pressure). Heavy hammer blows required to break specimen.
Moderately Hard	Specimen can be scratched with pocket knife or sharp pick with light or moderate pressure. Core breaks with moderate hammer pressure.
Moderately Soft	Specimen can be grooved 1/6" deep with a pocket knife or sharp pick with moderate or heavy pressure. Breaks with light hammer blow or heavy manual pressure.
Soft	Specimen can be grooved or gouged easily by a pocket knife or sharp pick with light pressure, can be scratched with fingernail. Breaks with light to moderate manual pressure.
Very Soft	Specimen can be readily indented, grooved or gouged with fingernail, or carved with a pocket knife. Breaks with light manual pressure.

FRACTURE DENSITY

Description	Observed Fracture Density
Unfractured	No fractures.
Very slightly fractured	Lengths greater than 3 feet.
Slightly fractured	Lengths from 1 to 3 feet with few lengths less than 1 foot or greater than 3 feet.
Moderately fractured	Lengths mostly in 4" to 1 foot range with most lengths about 8"
Intensely fractured	Lengths average from 1 to 4" with scattered fragmented intervals with lengths less than 4"
Very intensely fractured	Mostly chips and fragments with a few scattered short core lengths.

Combination descriptors (such as "Very intensely to intensely fractured") are used where equal distribution of both fracture density characteristics is present over a significant interval or exposure, or where characteristics are "in between" the descriptor definitions. Only two adjacent descriptors may be combined.

WEATHERING DESCRIPTORS FOR INTACT ROCK

Description	Diagnostic features					General Characteristics
	Chemical Weathering-Discoloration and/or oxidation		Mechanical Weathering-Grain boundary conditions (disaggregation) primarily for granitics and some coarse-grained sediments	Texture and Solutioning		
	Body of Rock	Fracture Surfaces		Texture	Solutioning	
Fresh	No discoloration, not oxidized.	No discoloration or oxidation.	No separation, intact (tight).	No change.	No solutioning.	Hammer rings when crystalline rocks are struck.
Slightly Weathered	Discoloration or oxidation is limited to surface of, or short distance from, fractures; some feldspar crystals are dull.	Minor to complete discoloration or oxidation of most surfaces.	No visible separation, intact (tight).	Preserved.	Minor leaching of some soluble minerals may be noted.	Hammer rings when crystalline rocks are struck. Body of rock not weakened.
Moderately Weathered	Discoloration or oxidation extends from fractures usually throughout; Fe-Mg minerals are "rusty," feldspar crystals are "cloudy."	All fracture surfaces are discolored or oxidized.	Partial separation of boundaries visible.	Generally preserved.	Soluble minerals may be mostly leached.	Hammer does not ring when rock is struck. Body of rock is slightly weakened.
Intensely Weathered	Discoloration or oxidation throughout; all feldspars and Fe-Mg minerals are altered to clay to some extent; or chemical alteration produces in-situ disaggregation, see grain boundary conditions.	All fracture surfaces are discolored or oxidized, surfaces friable.	Partial separation, rock is friable; in semiarid conditions granitics are disaggregated.	Texture altered by chemical disintegration (hydration, argillation).	Leaching of soluble minerals may be complete.	Dull sound when struck with hammer, usually can be broken with moderate to heavy manual pressure or by light hammer blow without reference to planes of weakness such as incipient or hairline fractures, or veinlets. Rock is significantly weakened.
Decomposed	Discolored or oxidized throughout, but resistant minerals such as quartz may be unaltered; all feldspars and Fe-Mg minerals are completely altered to clay.		Complete separation of grain boundaries (disaggregated).	Resembles a soil, partial or complete remnant rock structure may be preserved; leaching of soluble minerals usually complete.		Can be granulated by hand. Resistant minerals such as quartz may be present as "stringers" or "dikes."

Combination descriptors (such as "slightly weathered to fresh") are permissible where equal distribution of both weathering characteristics is present over significant intervals or where characteristics present are "in between" the diagnostic feature. However, combination descriptors should not be used where significant, identifiable zones can be delineated. Only two adjacent descriptors may be combined. "Very intensely weathered" is the combination descriptor for "intensely weathered to decomposed."

ENGINEERING SERVICES			GEOTECHNICAL SERVICES	STATE OF CALIFORNIA DEPARTMENT OF TRANSPORTATION	DIVISION OF ENGINEERING SERVICES OFFICE OF GEOTECHNICAL DESIGN BRANCH	BRIDGE NO. 35-0245F	ROCK LEGEND
FUNCTIONAL SUPERVISOR	PREPARED BY	M. Reynolds 06/09	FIELD INVESTIGATION BY:			POST MILE 10.2/10.7	LOG OF TEST BORINGS 7 OF 9
NAME: G. Wilcox	CHECKED BY	B. Price	C. Risden				
GS LOTB ROCK LEGEND			ORIGINAL SCALE IN INCHES FOR REDUCED PLANS 0 1 2 3	CU 04 EA 1A7701		DISREGARD PRINTS BEARING EARLIER REVISION DATES →	REVISION DATES — SHEET 18 OF 20

FILE => 35-0245f-z-1tb07.dgn

USERNAME => trstrk DATE PLOTTED => 20-JAN-2011 TIME PLOTTED => 10:29

DIST.	COUNTY	ROUTE	POST MILES—TOTAL PROJECT	SHEET NO.	TOTAL SHEETS
04	SM	280,92	R17,T69/R77	192	215

John A. [signature]
DESIGN SECTION SUPERVISOR — REGISTERED CIVIL ENGINEER NO. 10104
DATE APPROVED September 13 1971

LEGEND OF BORING OPERATIONS

- PENETROMETER
- 2½" CONE PENETROMETER
- SAMPLER BORING (DRY)
- ROTARY BORING (WET)
- AUGER BORING (DRY)
- JET BORING
- CORE BORING
- TEST PIT

1" SOIL TUBE — Top Hole El., Location, Blows per foot (Using — lb hammer with 12" free fall), Description of material, Sample taken, Pulled pipe

ROTARY BORING — Top Hole El., Casing driven, Size of sampler (inches), Blows per foot (Using a 140 lb hammer with a 30" drop, or as noted), Unit weight (lb/cu ft), % Moisture, Consolidation Test, G.W.S. El. Date measured, Conformable material change, Unconfined compressive strength (lb/sq ft), Estimated material change, Vane shear strength (lb/sq ft), Unconformable material change

PENETRATION BORING — Top Hole El., Pusher, No count recorded, Seconds per foot (Using a 1 1/2 McKiernan-Terry Air hammer @ 115 psi or as noted), G.W.S. El., Date measured, Graphic representation of driving rate, Average skin friction above this point (lb/sq ft), Seconds per foot

LEGEND OF EARTH MATERIALS

- GRAVEL
- SAND
- SILT
- CLAY
- SANDY CLAY OR CLAYEY SAND
- SANDY SILT OR SILTY SAND
- SILTY CLAY OR CLAYEY SILT
- PEAT AND/OR ORGANIC MATTER
- FILL MATERIAL
- IGNEOUS ROCK
- SEDIMENTARY ROCK
- METAMORPHIC ROCK

CLASSIFICATION OF MATERIAL BASED ON STANDARD GRADE SIZE LIMITS

DIAGRAM SHOWING THE BASES FOR ESTIMATES OF GRADE SIZE DISTRIBUTION USED IN DETERMINATION OF CLASS NAMES. IF GRAVEL IS PRESENT IN APPRECIABLE AMOUNTS THE TERM "GRAVELLY" MAY BE ADDED TO THE CLASS NAME, VIZ. "GRAVELLY SAND". THE TERMS "COARSE", "MEDIUM" AND "FINE" WHEN USED TO DESCRIBE SAND, SILT AND GRAVEL REFER TO STANDARD GRADE SIZE LIMITS.

NOTE: Classification of earth material as shown on this sheet is based upon field inspection and is not to be construed to imply mechanical analysis.

FIELD STUDY	BY W.T. Nelson 9-69
DRAWN	BY S. Kawamura 10-2-69
CHECKED	BY W.T. Nelson 8-17-70

Approval Recommended by [signature] Engineering Geologist

Added Supplemental Borings S.K 8-12-70

BRIDGE DEPARTMENT
ENGINEERING GEOLOGY SECTION

B.M. #4 Pt-59
RR spike with "X" on W shoulder Canada Rd
175'± Rt. "RG" 181+63±
Elev 348.018

TO ACCOMPANY PLANS DATED 1-18-11

GEOTECHNICAL SERVICES-DIVISION OF ENGINEERING SERVICES					
As-Built Log of Test Borings sheet is considered an informational document only. As such, the State of California registration seal with signature, license number and registration certificate expiration date confirm that this is a true and accurate copy of the original document. It does not attest to the accuracy or validity of the information contained in the original document. This drawing is available and presented only for the convenience of any bidder, contractor or other interested party.					
DIST.	COUNTY	ROUTE	POST MILES-TOTAL PROJECT	SHEET NO.	TOTAL SHEETS
04	SM	280	10.7/11.0	82	83

REGISTERED GEOLOGIST [signature] — DATE 07-15-09

REGISTERED GEOLOGIST Chris Risden No. 7795 Exp. 9-30-09 STATE OF CALIFORNIA

S280/E92 CONNECTOR OC (RETROFIT)
LOG OF TEST BORINGS 8 OF 9

NOTE: A COPY OF THIS LOG OF TEST BORINGS IS AVAILABLE AT OFFICE OF STRUCTURE MAINTENANCE AND INVESTIGATIONS, SACRAMENTO, CALIFORNIA.

CU: 04 EA: 1A7701 — BRIDGE NO. 35-0245F — Sheet 19 of 20

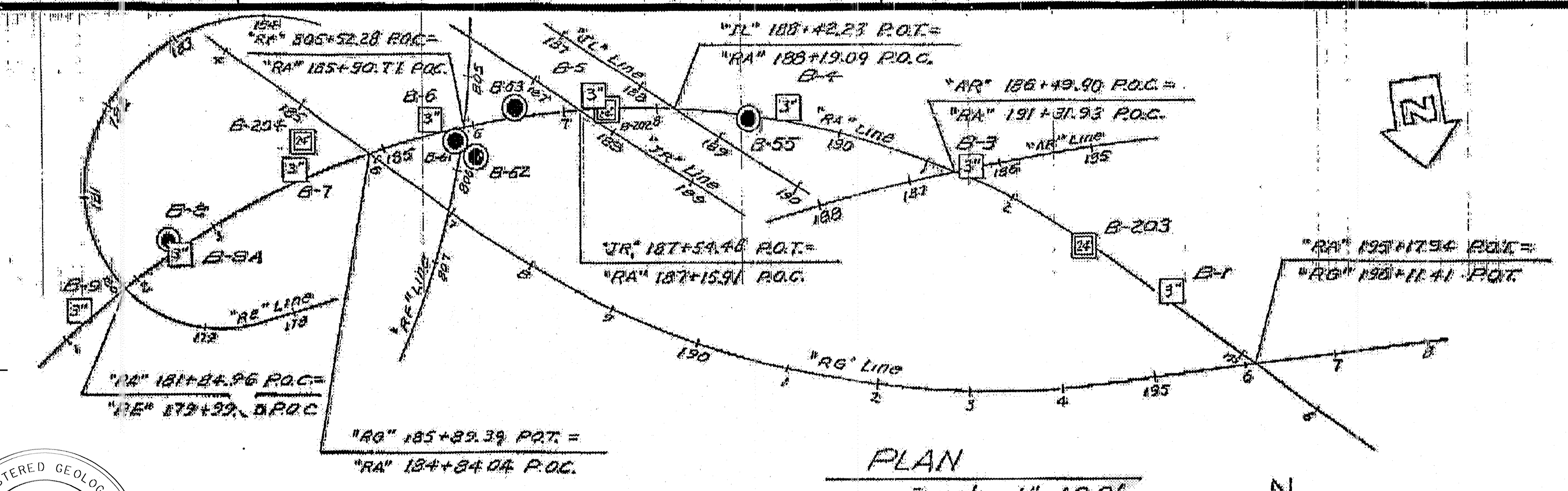

PLAN
Scale 1" = 100'

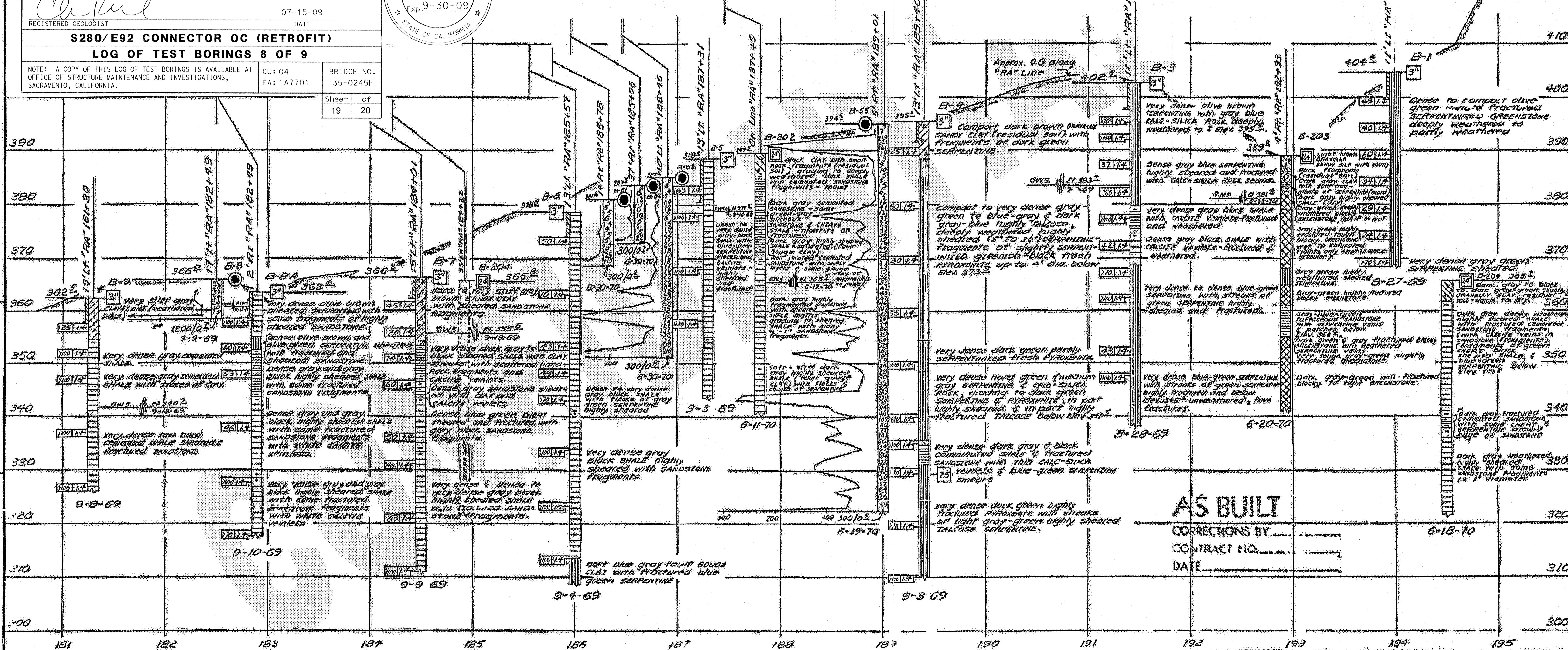

PROFILE
Scale Horz. 1" = 50'
Vert. 1" = 10'

AS BUILT
CORRECTIONS BY ______
CONTRACT NO. ______
DATE ______

AS BUILT PLANS
Contract No. 04-419264
Date Completed 09-71
Document No. 40006425

STATE OF CALIFORNIA
TRANSPORTATION AGENCY
DEPARTMENT OF PUBLIC WORKS
DIVISION OF HIGHWAYS

EASTBOUND CONNECTOR OVERCROSSING

LOG OF TEST BORINGS

BRIDGE NO.	POST MILE	DRAWING NO.	SHEET	OF
35-245	10.9		19.	20.

WO 419261
CU 04209

Disregard prints bearing earlier revision dates →

REVISION DATES (PRELIMINARY STAGE ONLY)

I HEREBY CERTIFY THAT THIS IS A TRUE AND ACCURATE COPY OF THE ABOVE DOCUMENT TAKEN

FILENAME => 35-0245f-z-ltb08.tif

DIST.	COUNTY	ROUTE	POST MILES—TOTAL PROJECT	SHEET No.	TOTAL SHEETS
04	SM	280	28.09 RA 7/10.2, 10.9/11.7	193	215

DISTRICT ENGINEER, SAN FRANCISCO
PUBLIC WORKS CIVIL ENGINEERS PO. 10104
DATE APPROVED September 13, 1971

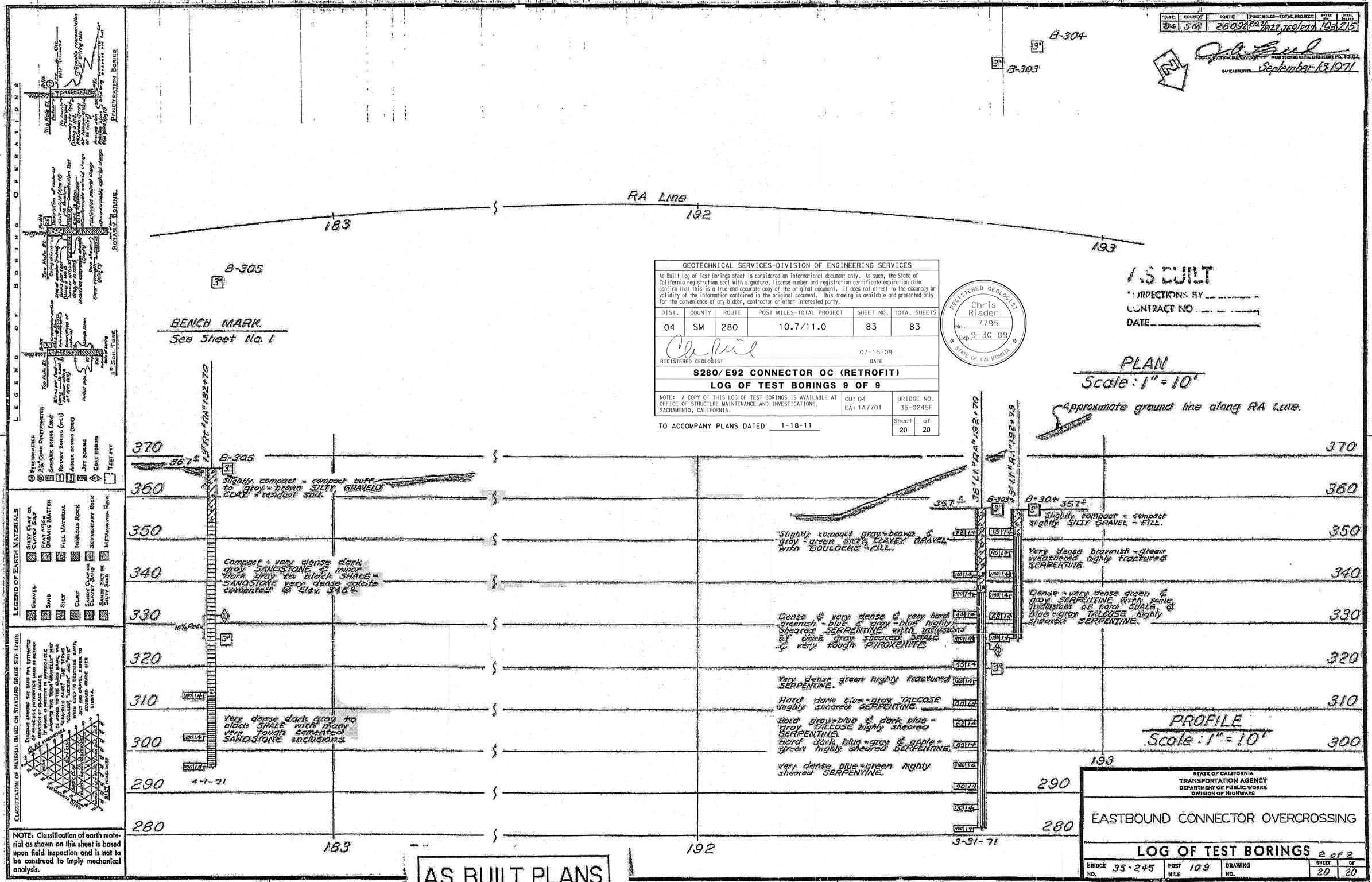

GEOTECHNICAL SERVICES-DIVISION OF ENGINEERING SERVICES

As-Built Log of Test Borings sheet is considered an informational document only. As such, the State of California registration seal with signature, license number and registration certificate expiration date confirm that this is a true and accurate copy of the original document. It does not attest to the accuracy or validity of the information contained in the original document. This drawing is available and presented only for the convenience of any bidder, contractor or other interested party.

DIST.	COUNTY	ROUTE	POST MILES-TOTAL PROJECT	SHEET NO.	TOTAL SHEETS
04	SM	280	10.7/11.0	83	83

REGISTERED GEOLOGIST — DATE 07-15-09

REGISTERED GEOLOGIST Chris Risden No. 7795 Exp. 9-30-09 STATE OF CALIFORNIA

S280/E92 CONNECTOR OC (RETROFIT)

LOG OF TEST BORINGS 9 OF 9

NOTE: A COPY OF THIS LOG OF TEST BORINGS IS AVAILABLE AT OFFICE OF STRUCTURE MAINTENANCE AND INVESTIGATIONS, SACRAMENTO, CALIFORNIA.

CU: 04 EA: 1A7701 — BRIDGE NO. 35-0245F — Sheet 20 of 20

TO ACCOMPANY PLANS DATED 1-18-11

AS BUILT
INSPECTIONS BY
CONTRACT NO.
DATE

STATE OF CALIFORNIA
TRANSPORTATION AGENCY
DEPARTMENT OF PUBLIC WORKS
DIVISION OF HIGHWAYS

EASTBOUND CONNECTOR OVERCROSSING

LOG OF TEST BORINGS 2 of 2

BRIDGE NO.	POST MILE	DRAWING NO.	SHEET	OF
35-245	10.9		20	20

REVISION DATES (PRELIMINARY STAGE ONLY) 4/8/91

Disregard prints bearing earlier revision dates

AS BUILT PLANS
Contract No. 04-419264
Date Completed 09-71
Document No. 40006425

WO 419264
CU 04209

I HEREBY CERTIFY THAT THIS IS A TRUE AND ACCURATE COPY OF THE ABOVE DOCUMENT TAKEN UNDER MY DIRECTION AND CONTROL ON THIS DATE IN SACRAMENTO, CALIFORNIA PURSUANT TO AUTHORIZATION BY THE DIRECTOR OF TRANSPORTATION.

DATE 6-17-74 SIGNATURE TITLE Materials Engineer

FILENAME => 35-0245f-z-1tb09.tif