State of California
DEPARTMENT OF TRANSPORTATION

Business, Transportation and Housing Agency

Flex your power!
Be energy efficient!

Memorandum

To: ROB STOTT
Deputy Division Chief
Offices of Structure Construction
Division of Engineering Services

Date: March 16, 2010

File: 04-SF-1/101
Doyle Dr. Project Contract 3
04-163733

Attn: John Babcock FOR JFB

From: Majid Madani,

Bridge Design West
Office of Structure Design
Division of Engineering Services, MS 09

Subject: Request for Contract Change Order

This is to initiate a Contract Change Order request for replacing the light pedestal, VMS sign, construction signs to accommodate the Presidio Trust request and recommendation. (Please check all applicable boxes):

X	Superstructure			☐	Building Work		
	☐ Deck		☐ Soffit		☐ Electrical	☐ Mechanical	
	☐ Hinges	☐	Joint		☐ Structural	☐ Architectural	
☐	Substructure			☐	Specification		
	☐ Columns	☐	Footings		☐ Amendment	☐ Delete	
	☐ Abutment				☐ Addition		
X	Piles			X	Steel		
	X CIDH	☐	CISS		x Reinforcing	☐ Stressing	
	☐ Precast	☐	Steel		☐ Misc Metal	☐ Structural	
	☐ Micropile	☐	Pile Tip		☐ Couplers		
☐	Walls				Other		
	☐ Retaining	☐	Tieback	Structural steel for custom light poles and VMS sign and corresponding pedestals.			
	☐ Soil Nail	☐	MSE				
	☐ Sound						
X	Barriers and Overhead Sign Structures						
	☐ Barrier	X	OHSS				

Brief Description of Work: Brief Description
Replacing the standard light poles and VMS signs to a new custom design.
This Contract Change Order is necessary due to the following: Why Change?
To accommodate the Presidio Trust request. Construction will resolve any cost related issue created by this CCO with the contractor in the field.

Quantity changes:

Construction signs: No change in the quantity
Rail mounted road sign: Ruckman Ave sign 372 pounds, Presidio Viaduct 400 pounds.
Custom light pole and CIDH foundation, Quantities are per pole: Steel -2538 pounds, Concrete - 3.40 cu yd, Rebar-508 pounds
Two post custom VMS sign pedestal / Presidio Viaduct: Quantities are per pedestal, Concrete -14.07 cu yd, rebar – 2798 pounds. The signs and the structural support for VMS are State Furnished Material.
Custom light pole / Presidio Viaduct: Concrete – 1.01 cu yd, rebar – 546 pounds.
Custom light pole corbel Type 1B corbel on N1-S101 Connector: Concrete – 1.01 cuyd, Rebar – 364 pounds.

State of California
DEPARTMENT OF TRANSPORTATION

Business, Transportation and Housing Agen

Flex your power!
Be energy efficient!

Memorandum

Per this CCO, SIX copies of each of the following plan sheets are attached:

X	Revision:	6
X	Supplemental:	6
x	Additional:	6

The following additional documents are attached:

This Contract Change Order has been discussed with the Structure Representative –
John Walters YES **X** NO

If there are any questions or more information is needed, please contact Majid Madani at (916) 227-8366.

Design Cc:Lisa McCutcheon, Jeff Woody, OAlcantara, Ahmed Ibraim, Phil Lutz

Offices of Structure Construction Concurrence: John Babcock, Office Chief

Const. Cc: Rusty Crain,

DIST	COUNTY	ROUTE	POST MILES TOTAL PROJECT	SHEET No	TOTAL SHEET
04	SF	101,1	9.2/9.8, 6.8/7.1	434R1	567

Robert B. Giorgis Jr. 6-15-09
REGISTERED CIVIL ENGINEER DATE

7-20-09
PLANS APPROVAL DATE

REGISTERED PROFESSIONAL ENGINEER ROBERT B. GIORGIS JR. No. C60705 Exp. 12/31/10 CIVIL STATE OF CALIFORNIA

The State of California or its officers or agents shall not be responsible for the accuracy or completeness of electronic copies of this plan sheet.

1

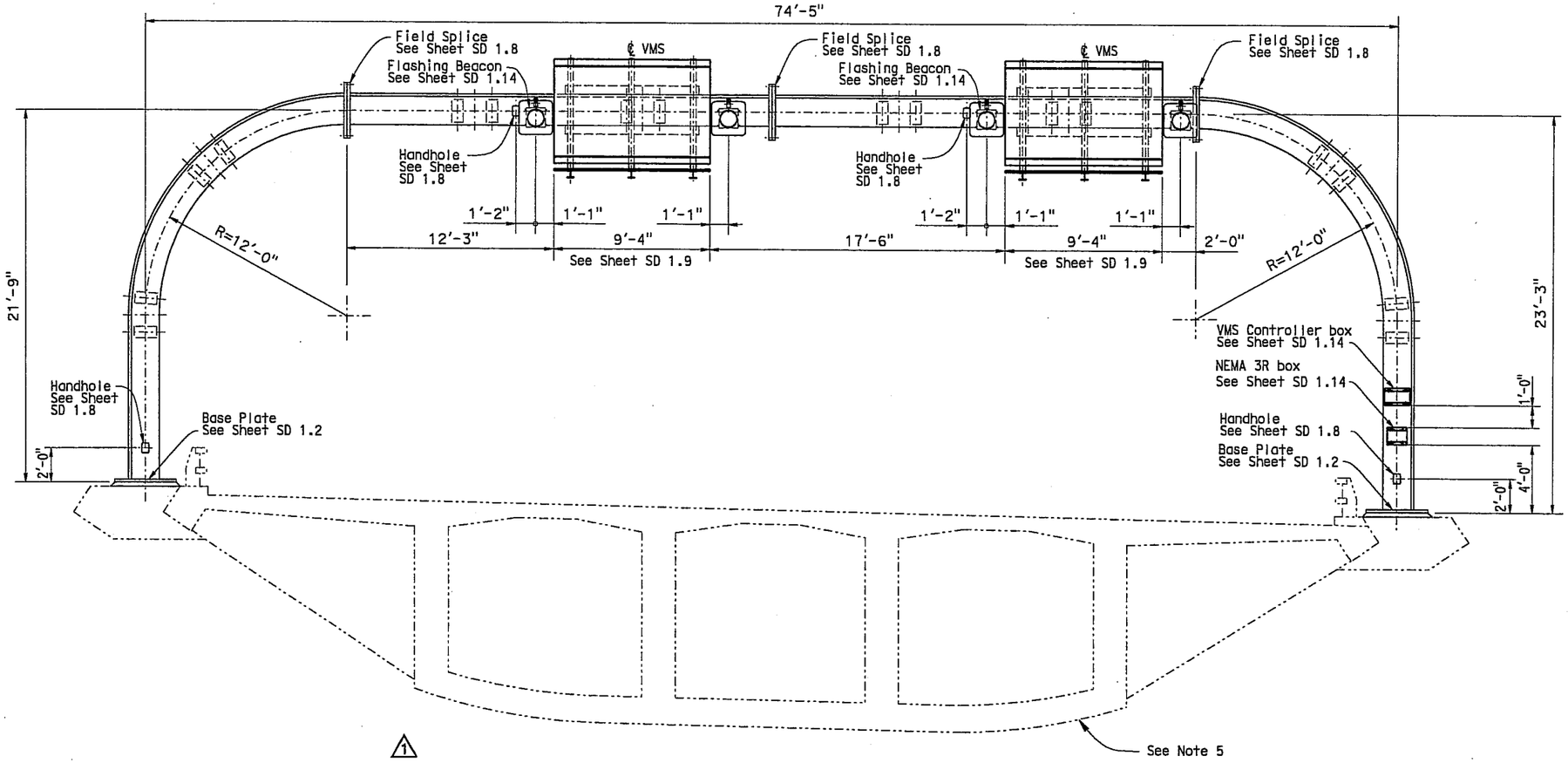

1

TWO POST VARIABLE MESSAGE SIGN AND PEDESTAL

1/4"=1'-0"

1 NOTES:

1. For ST-10 barrier details see Presidio Viaduct plans.
2. Rebar not shown for clarity.
3. Bridge cross-section details not shown. See "TYPICAL SECTION" in Presideo Viaduct plans.
4. Two-post Variable Message Sign pedestal must be located at centerline of bent with steel fin at centerline of bent.
5. Field verify span length.
6. Superstucture cross slope not shown.
7. See Road Plans for sign structure and related items quantities.
8. Sign structure shall be galvanized then painted international orange.
9. For sign stucture location, see "PRESIDIO VIADUCT-LEFT, GENERAL PLAN NO. 1".
10. For details not shown see, "2006 STANDARD PLANS" and "2006 REVISED STANDARD PLANS".
11. Place walkway only where sign panel is to be installed. Note applies independently to opposite sides facing traffic.

NOTE:
THE CONTRACTOR SHALL VERIFY ALL CONTROLLING FIELD DIMENSIONS BEFORE ORDERING OR FABRICATING ANY MATERIAL.

REGISTERED PROFESSIONAL ENGINEER LISA McCUTCHEON No. C70121 Exp. 9/30/10 CIVIL STATE OF CALIFORNIA

MARK	DATE	REVISION(S) DESCRIPTIONS	DES	CHK	DET
2	3-10-10	Added GENERAL NOTES	LM		AD
1	3-10-10	Revised Details and Notes	LM		AD

REGISTERED CIVIL ENGINEER: DATE: 3-10-10

CONTRACT CHANGE ORDER NO. ____
SHEET ___ OF ___

GENERAL NOTES 2

DESIGN:

AASHTO Specifications for Structural Supports for Highway Signs, Luminaires and Traffic Signals, dated 2001.

CONSTRUCTION:

Standard Specifications and the Special Provisions.

LOADING:

WIND LOADING:

Normal to face of sign: 44.1 lb/ft^2 on 100% panel coverage.

Transverse to face of sign: 20% of normal force.

Normal to face of sign structure: 63.0 lb/ft on 100% structure coverage.

Transverse to face of structure: 20% of normal force.

WALKWAY LOADING:

Dead load +500 lb concentrated live load.

UNIT STRESSES:

STRUCTURAL STEEL: fy = 36 KSI

MINIMUM CLEARANCE

Vertical roadway clearance 18'-6" above roadway and shoulders to walkway bracket.

WELDING:

All welding continuous unless otherwise noted on the plans.

ABBREVIATIONS

VMS = VARIABLE MESSAGE SYSTEM

STANDARD PLANS JULY 2006 AND MAY 2006 REVISED STANDARD PLANS

A10A	ACRONYMS AND ABBREVIATIONS (A-L)
A10B	ACRONYMS AND ABBREVIATIONS (M-Z)
ES4D	ELECTRICAL SYSTEMS (SIGNAL HEADS AND MOUNTINGS)

1 REVISED PER ADDENDUM No. 1 DATED AUGUST 13, 2009

SD 1.1

Jeffrey B Woody
BRANCH CHIEF

	BY	CHECKED
DESIGN	M O'LEARY	JOHN DATILES
DETAILS	A R DUDSAK	M O'LEARY
QUANTITIES	D VORA	JOHN DATILES

STATE OF CALIFORNIA
DEPARTMENT OF TRANSPORTATION

DIVISION OF ENGINEERING SERVICES
STRUCTURE DESIGN
SPECIAL DESIGNS BRANCH

CU 04
EA 163731
FILE => 04_163731_sd1.1.cco

BRIDGE NO. 34-0157L
POST MILE X

PRESIDIO VIADUCT - LEFT
PEDESTAL DETAILS NO. 1

STRUCTURES DESIGN SPECIAL DESIGN SHEET (ENGLISH) (REV. 10-25-05)

ORIGINAL SCALE IN INCHES FOR REDUCED PLANS 0 1 2 3

DISREGARD PRINTS BEARING EARLIER REVISION DATES

REVISION DATES: 5/14/09 | 5/18/09 | 6-12-09 | 7-15-09 | 7-20-09 | 3-10-10

SHEET 84 OF 114

DIST	COUNTY	ROUTE	POST MILES TOTAL PROJECT	SHEET No	TOTAL SHEET
04	SF	101,1	9.2/9.8, 6.8/7.1	435R1	567

Robert B. Giorgis 6-15-09
REGISTERED CIVIL ENGINEER DATE

7-20-09
PLANS APPROVAL DATE

The State of California or its officers or agents shall not be responsible for the accuracy or completeness of electronic copies of this plan sheet.

REGISTERED PROFESSIONAL ENGINEER ROBERT B. GIORGIS JR. No. C60705 Exp. 12/31/10 CIVIL STATE OF CALIFORNIA

1

MARK	DATE	REVISION(S) DESCRIPTIONS	DES	CHK	DET
1	3-10-10	Revised Entire sheet	RB		DJ

REGISTERED CIVIL ENGINEER: DATE: 3-10-10

CONTRACT CHANGE ORDER NO. ____
SHEET ___ OF ___

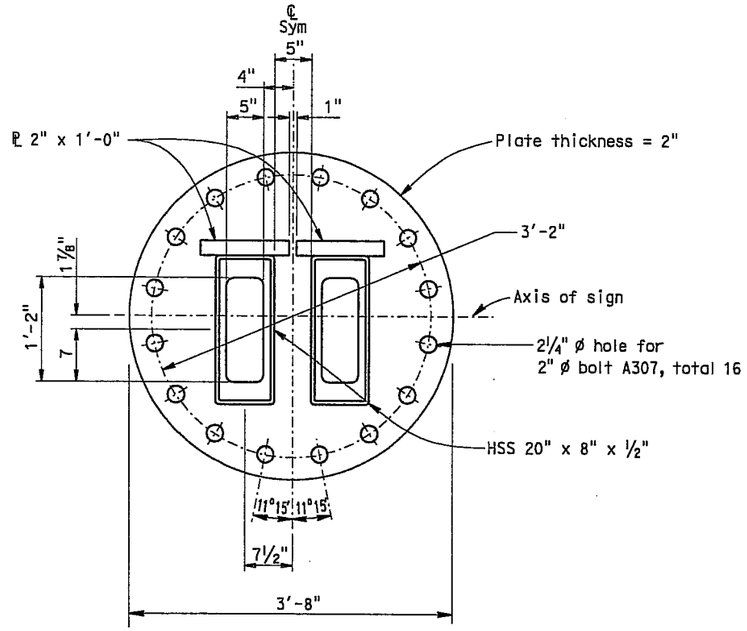

BASE PLATE

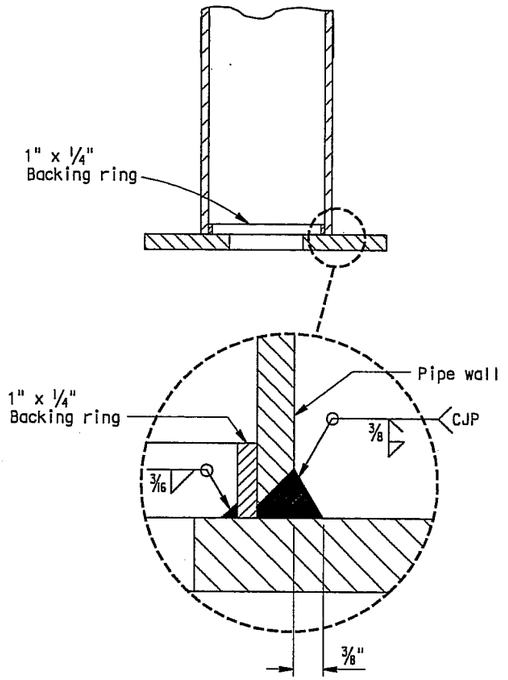

POST TO BASE PLATE CONNECTION DETAIL

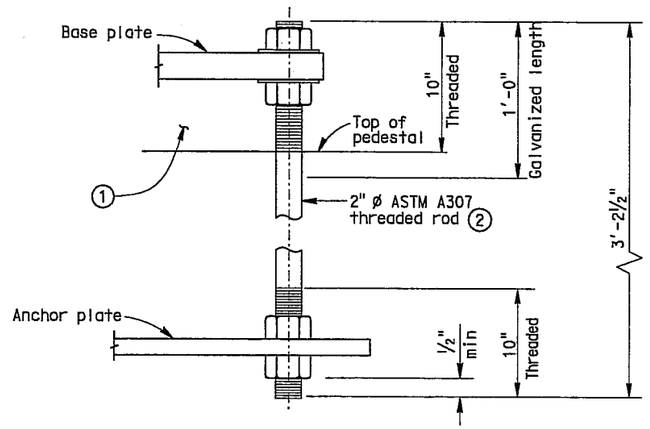

ANCHOR ROD ASSEMBLY

Note: One bolt shown only. Other bolts same configuration around pipe sleeve. Template to match base plate anchor bolt pattern.

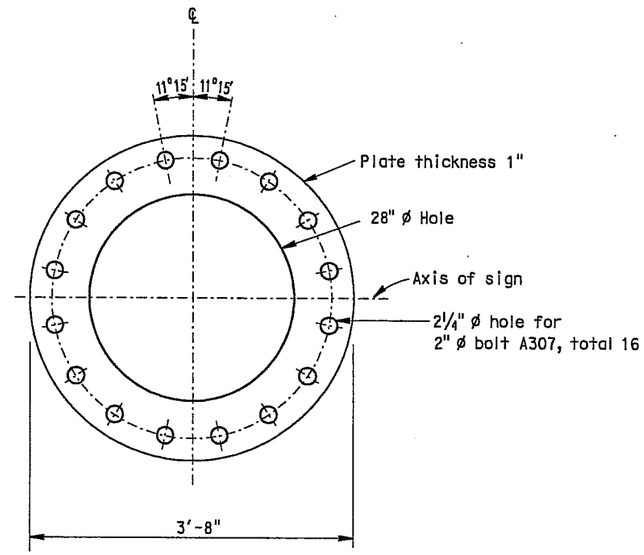

ANCHOR PLATE

Notes:

1. Non shrink grout pad thickness shall be no less than 2½" and no greater than 4". Finish sides with a 45° slope.
2. Anchor rods shall be installed using permanent and temporary templates as shown in "Anchor Bolt Template Assembly" of Standard Plan S10.

NOTE:
THE CONTRACTOR SHALL VERIFY ALL CONTROLLING FIELD DIMENSIONS BEFORE ORDERING OR FABRICATING ANY MATERIAL.

1 REVISED PER ADDENDUM No. 1 DATED AUGUST 13, 2009

1 PEDESTAL FOR TWO-POST TUBULAR DETAILS 1

SD 1.2

NO SCALE

Jeffrey B Woody
BRANCH CHIEF

DESIGN	BY M O'LEARY	CHECKED JOHN DATILES	
DETAILS	BY T.ZOLNIKOVA	CHECKED M O'LEARY	
QUANTITIES	BY M O'LEARY	CHECKED JOHN DATILES	

STATE OF CALIFORNIA
DEPARTMENT OF TRANSPORTATION

DIVISION OF ENGINEERING SERVICES
STRUCTURE DESIGN
SPECIAL DESIGNS BRANCH

CU 04
EA 163731

BRIDGE NO. 34-0157L
POST MILE X

PRESIDIO VIADUCT - LEFT
PEDESTAL DETAILS NO. 2

DISREGARD PRINTS BEARING EARLIER REVISION DATES

REVISION DATES: 5/14/09 | 6-12-09 | 7-20-09 | 7-24-09 | 3-10-10

SHEET 85 OF 114

STRUCTURES DESIGN SPECIAL DESIGN SHEET (ENGLISH) (REV. 10-25-05)

ORIGINAL SCALE IN INCHES FOR REDUCED PLANS 0 1 2 3

LFILE => 04_163731_sd1_2.ccp

DIST	COUNTY	ROUTE	POST MILES TOTAL PROJECT	SHEET No	TOTAL SHEETS
04	SF	101,1	9.2/9.8, 6.8/7.1	436R1	567

Robert B Giorgis 6-15-09
REGISTERED CIVIL ENGINEER DATE

7-20-09
DATE

The State of California or its officers or agents shall not be responsible for the accuracy or completeness of electronic copies of this plan sheet.

REGISTERED PROFESSIONAL ENGINEER ROBERT B. GIORGIS JR. No. C60705 Exp. 12/31/10 CIVIL STATE OF CALIFORNIA

1

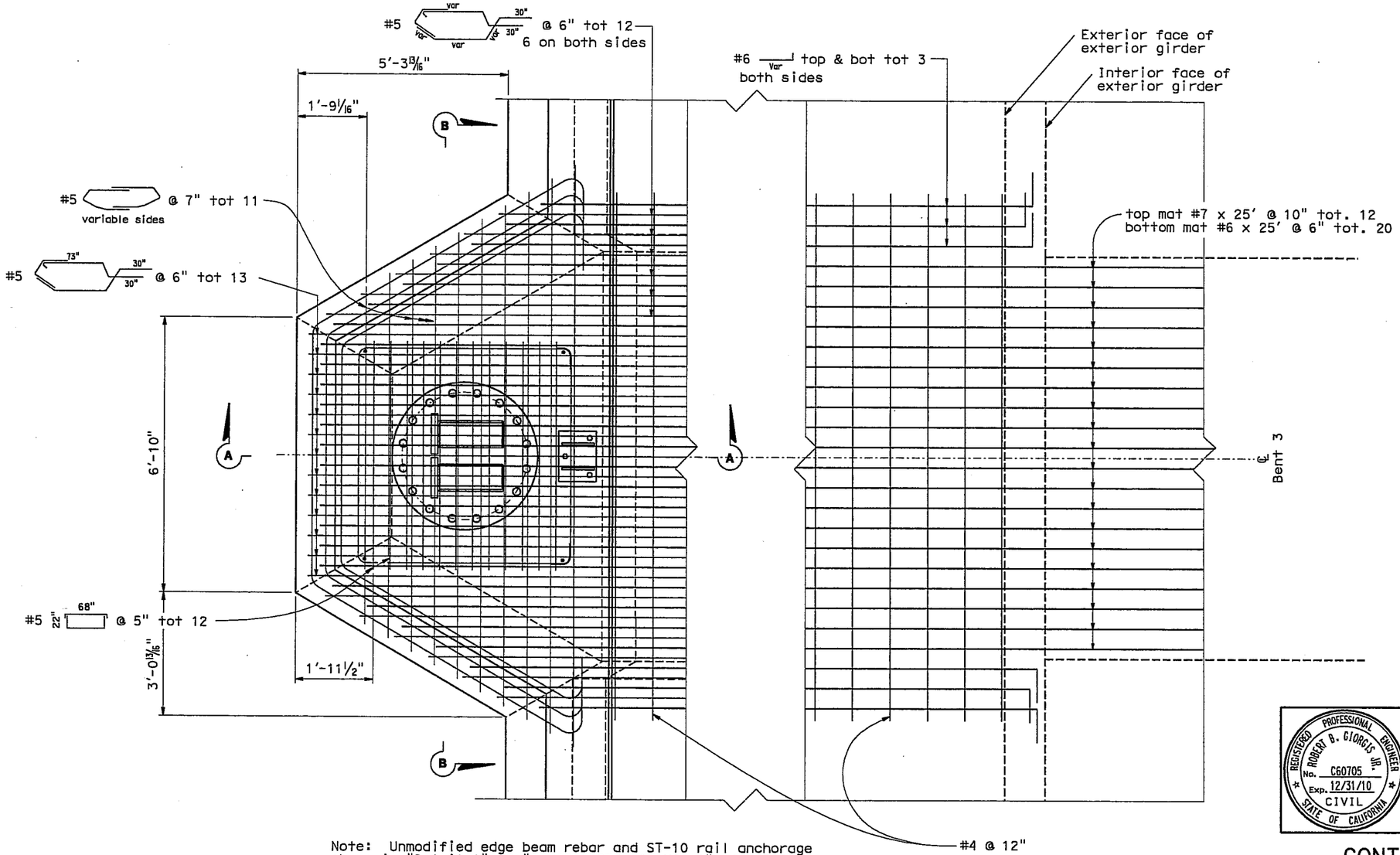

Note: Unmodified edge beam rebar and ST-10 rail anchorage shown in "Detail A" of "TYPICAL SECTION NO. 1" of PRESIDIO VIADUCT - LEFT is not included for clarity

PLAN VIEW 1

Notes: 1

1. 3" cover on pedestal rebar unless otherwise noted.
2. Barrier not shown for clarity.
3. Deck rebar not shown for clarity.
4. Transverse deck rebar and prestressing ducts not shown for clarity
5. 25 foot bars extend into bent cap with cover to match deck rebar.
6. See Sheet SD 1.2 for base plate and anchorage details.
7. See Sheets SD 1.8 through SD 1.14 for sign structure details.
8. See Sheet SD 1.4 for View A-A.
9. See Sheet SD 1.5 for View B-B.

REGISTERED PROFESSIONAL ENGINEER ROBERT B. GIORGIS JR. No. C60705 Exp. 12/31/10 CIVIL STATE OF CALIFORNIA

MARK	DATE	REVISION(S) DESCRIPTIONS	DES	CHK	DET
1	3-10-10	Revised Plan View and Notes	RB		DJ
REGISTERED CIVIL ENGINEER:			DATE: 3-10-10		

CONTRACT CHANGE ORDER NO. ____
SHEET ___ OF ___

NOTE:
THE CONTRACTOR SHALL VERIFY ALL CONTROLLING FIELD DIMENSIONS BEFORE ORDERING OR FABRICATING ANY MATERIAL.

1 REVISED PER ADDENDUM No. 1 DATED AUGUST 13, 2009

PEDESTAL FOR TWO-POST TUBULAR DETAILS 1

NO SCALE

SD 1.3

Jeffrey B Woody
BRANCH CHIEF

	BY	CHECKED
DESIGN	BOB GIORGIS	JOHN DATILES
DETAILS	D W JUSTICE Jr	BOB GIORGIS
QUANTITIES	M O'LEARY	JOHN DATILES

STATE OF CALIFORNIA
DEPARTMENT OF TRANSPORTATION

DIVISION OF ENGINEERING SERVICES
STRUCTURE DESIGN
SPECIAL DESIGNS BRANCH

CU 04
EA 163731

BRIDGE NO. 34-0157L
POST MILE X

PRESIDIO VIADUCT - LEFT
PEDESTAL DETAILS NO. 3

STRUCTURES DESIGN SPECIAL DESIGN SHEET (ENGLISH) (REV. 10-25-05)

ORIGINAL SCALE IN INCHES FOR REDUCED PLANS 0 1 2 3

DISREGARD PRINTS BEARING EARLIER REVISION DATES

REVISION DATES: 5/14/09 5/19/09 5/29/09 6/8/09 6-12-09 7-20-09 7-30-09 3-10-10

SHEET 86 OF 114

FILE => 04_163731_sd1_3.dgn

DIST	COUNTY	ROUTE	POST MILES TOTAL PROJECT	SHEET No	TOTAL SHEETS
04	SF	101,1	9.2/9.8, 6.8/7.1	437R1	567

Robert B Giorgis Jr 6-15-09
REGISTERED CIVIL ENGINEER DATE

7-20-09
PLANS APPROVAL DATE

The State of California or its officers or agents shall not be responsible for the accuracy or completeness of electronic copies of this plan sheet.

REGISTERED PROFESSIONAL ENGINEER ROBERT B. GIORGIS JR. No. C60705 Exp. 12/31/10 CIVIL STATE OF CALIFORNIA

1

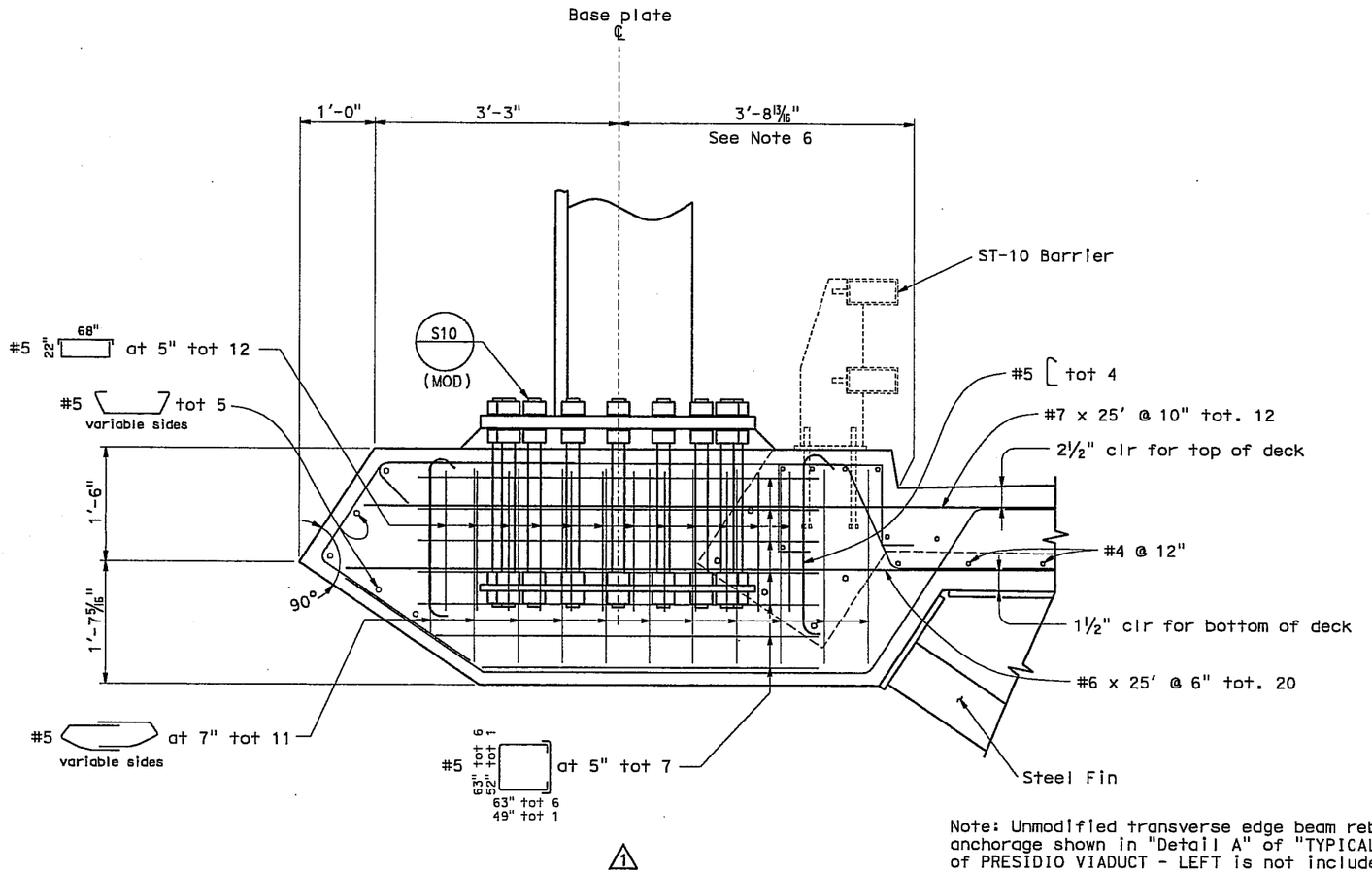

1

VIEW A-A

Notes: 1

1. 3" cover on pedestal rebar unless otherwise noted.
2. For ST-10 Barrier details see "PRESIDIO VIADUCT PLANS".
3. Transverse deck rebar and prestressing ducts not shown for clarity.
4. See Sheet SD 1.2 for anchorage details not shown.
5. One pedestal shall be placed on each side of Viaduct at Bent 3 ℄.
6. For Steel Fin details see "STEEL FIN DETAILS" and SD 1.6.
7. See Sheet SD 1.8 through SD 1.14 for sign structure details.
8. 2% slope not shown for clarity.
9. For location of VIEW A-A See Sheet SD 1.3.

Note: Unmodified transverse edge beam rebar and ST-10 rail anchorage shown in "Detail A" of "TYPICAL SECTION NO. 1" of PRESIDIO VIADUCT - LEFT is not included for clarity.

REGISTERED PROFESSIONAL ENGINEER ROBERT B. GIORGIS JR. No. C60705 Exp. 12/31/10 CIVIL STATE OF CALIFORNIA

MARK	DATE	REVISION(S) DESCRIPTIONS	DES	CHK	DET
1	3-10-10	Revised View A-A and Notes	RB		DJ

REGISTERED CIVIL ENGINEER: DATE: 3-10-10

CONTRACT CHANGE ORDER NO. ____
SHEET ___ OF ___

NOTE:
THE CONTRACTOR SHALL VERIFY ALL CONTROLLING FIELD DIMENSIONS BEFORE ORDERING OR FABRICATING ANY MATERIAL.

1 **REVISED PER ADDENDUM No. 1 DATED AUGUST 13, 2009**

PEDESTAL FOR TWO-POST TUBULAR DETAILS 2

NO SCALE

SD 1.4

Jeffrey B Woody
BRANCH CHIEF

	BY	CHECKED
DESIGN	BOB GIORGIS	JOHN DATILES
DETAILS	D W JUSTICE Jr	BOB GIORGIS
QUANTITIES	M O'LEARY	JOHN DATILES

STATE OF CALIFORNIA
DEPARTMENT OF TRANSPORTATION

DIVISION OF ENGINEERING SERVICES
STRUCTURE DESIGN
SPECIAL DESIGNS BRANCH

BRIDGE NO. 34-0157L
POST MILE X

PRESIDIO VIADUCT - LEFT
PEDESTAL DETAILS NO. 4

STRUCTURES DESIGN SPECIAL DESIGN SHEET (ENGLISH) (REV. 10-25-05)

ORIGINAL SCALE IN INCHES FOR REDUCED PLANS 0 1 2 3

CU 04
EA 163731

DISREGARD PRINTS BEARING EARLIER REVISION DATES

REVISION DATES 5/11/09 5/19/09 6/3/09 6/8/09 6-12-09 7-20-09 7-24-09 3-10-10

SHEET 87 OF 114

FILE => 04 163731 sd1-4.ccp

DIST	COUNTY	ROUTE	POST MILES TOTAL PROJECT	SHEET No	TOTAL SHEET
04	SF	101,1	9.2/9.8, 6.8/7.1	438R1	567

Robert B. Giorgis Jr. 6-15-09
REGISTERED CIVIL ENGINEER DATE

7-20-09
DATE

REGISTERED PROFESSIONAL ENGINEER ROBERT B. GIORGIS JR. No. C60705 Exp. 12/31/10 CIVIL STATE OF CALIFORNIA

The State of California or its officers or agents shall not be responsible for the accuracy or completeness of electronic copies of this plan sheet.

1

Notes: 1

1. 3" cover on pedestal rebar unless otherwise noted.
2. Barrier not shown for clarity.
3. See Sheet SD 1.2 for anchorage details not shown.
4. Steel fin not shown for clarity.
5. See Sheet SD 1.8 through SD 1.14 for sign structure details.
6. For location of VIEW B-B See sheet SD 1.3.

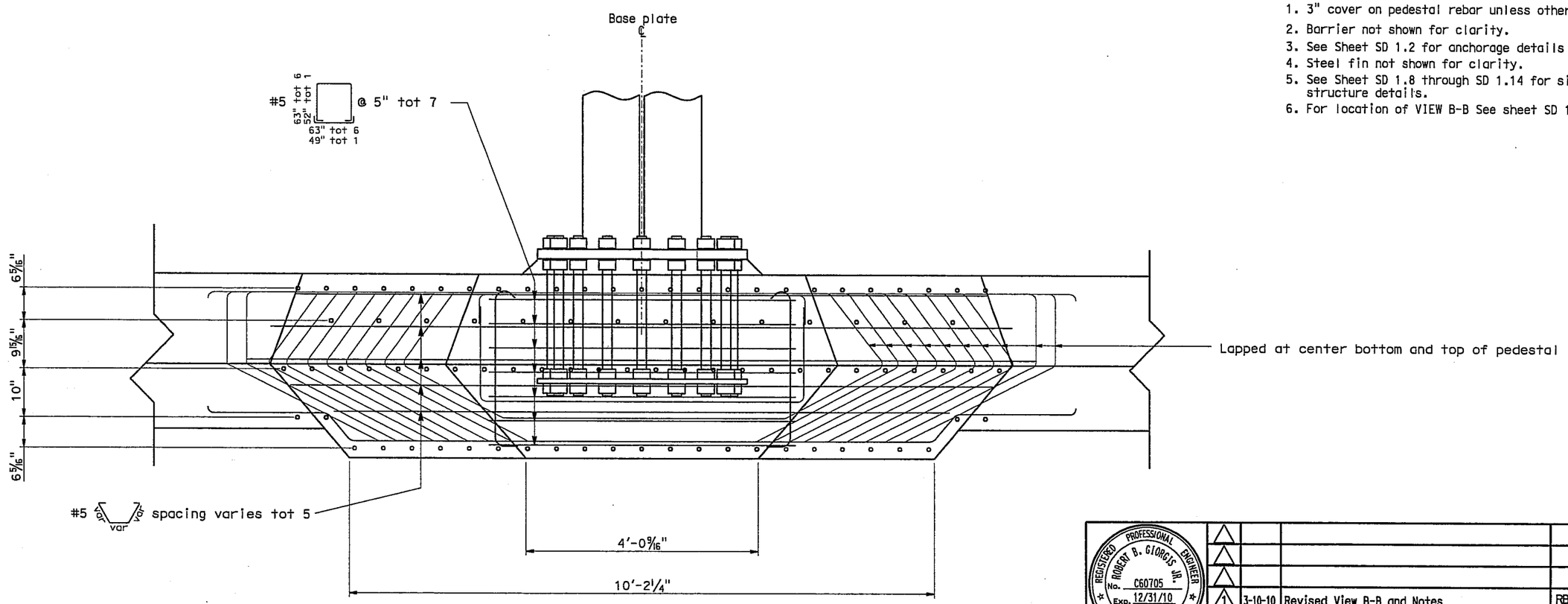

1

VIEW B-B

MARK	DATE	REVISION(S) DESCRIPTIONS	DES	CHK	DET
1	3-10-10	Revised View B-B and Notes	RB		DJ

REGISTERED CIVIL ENGINEER: DATE: 3-10-10

REGISTERED PROFESSIONAL ENGINEER ROBERT B. GIORGIS JR. No. C60705 Exp. 12/31/10 CIVIL STATE OF CALIFORNIA

CONTRACT CHANGE ORDER NO. _____
SHEET ____ OF ____

Note: Unmodified edge beam rebar and ST-10 rail anchorage shown in "Detail A" of "TYPICAL SECTION NO. 1" of PRESIDIO VIADUCT - LEFT is not included for clarity.

NOTE:
THE CONTRACTOR SHALL VERIFY ALL CONTROLLING FIELD DIMENSIONS BEFORE ORDERING OR FABRICATING ANY MATERIAL.

1 **REVISED PER ADDENDUM No. 1 DATED AUGUST 13, 2009**

PEDESTAL FOR TWO-POST TUBULAR DETAILS 3
NO SCALE
SD 1.5

Jeffrey B Woody
BRANCH CHIEF

	BY	CHECKED
DESIGN	BOB GIORGIS	JOHN DATILES
DETAILS	D W JUSTICE Jr	BOB GIORGIS
QUANTITIES	M O'LEARY	JOHN DATILES

STATE OF CALIFORNIA
DEPARTMENT OF TRANSPORTATION

DIVISION OF ENGINEERING SERVICES
STRUCTURE DESIGN
SPECIAL DESIGNS BRANCH

BRIDGE NO. 34-0157L
POST MILE X

PRESIDIO VIADUCT - LEFT
PEDESTAL DETAILS NO. 5

STRUCTURES DESIGN SPECIAL DESIGN SHEET (ENGLISH) (REV. 10-25-05)

ORIGINAL SCALE IN INCHES FOR REDUCED PLANS 0 1 2 3

CU 04
EA 163731

DISREGARD PRINTS BEARING EARLIER REVISION DATES

REVISION DATES 5/14/09 5/15/09 6/3/09 6/8/09 6-17-09 7-20-09 7-30-09

SHEET 88 OF 114

FILE => 04 163731 sd1.5.ccp

DIST	COUNTY	ROUTE	POST MILES TOTAL PROJECT	SHEET No	TOTAL SHEETS
04	SF	101,1	9.2/9.8, 6.8/7.1	439R1	567

Robert B. Giorgis 6-15-09
REGISTERED CIVIL ENGINEER DATE

7-20-09
PLANS APPROVAL DATE

The State of California or its officers or agents shall not be responsible for the accuracy or completeness of electronic copies of this plan sheet.

REGISTERED PROFESSIONAL ENGINEER ROBERT B. GIORGIS JR. No. C60705 Exp. 12/31/10 CIVIL STATE OF CALIFORNIA

1

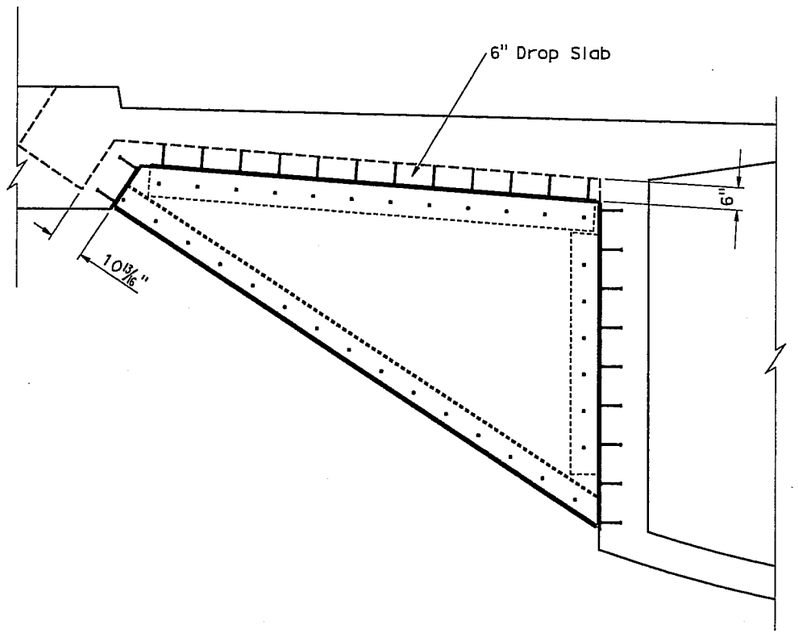

NOTES:

1. Refer to Sheets SD 1.3 through SD 1.5 for Pedestal Details.
2. Refer to "Steel Fin Details No.1" in "PRESIDIO VIADUCT PLANS" for additional information.
3. Rebar and Barrier not shown for clarity.

FIN MODIFICATION TO ACCOMMODATE DROP SLAB DETAIL

REGISTERED PROFESSIONAL ENGINEER ROBERT B. GIORGIS JR. No. C60705 Exp. 12/31/10 CIVIL STATE OF CALIFORNIA

MARK	DATE	REVISION(S) DESCRIPTIONS	DES	CHK	DET
1	3-10-10	Revised Entire sheet	RB		DJ

REGISTERED CIVIL ENGINEER: DATE: 3-10-10

CONTRACT CHANGE ORDER NO. ____
SHEET ___ OF ___

NOTE:
THE CONTRACTOR SHALL VERIFY ALL CONTROLLING FIELD DIMENSIONS BEFORE ORDERING OR FABRICATING ANY MATERIAL.

1 REVISED PER ADDENDUM No. 1 DATED AUGUST 13, 2009

DROP SLAB DETAIL 1 ⚠
NO SCALE

SD 1.6

Jeffrey B Woody
BRANCH CHIEF

	BY	CHECKED
DESIGN	M O'LEARY	BOB GIORGIS
DETAILS	A R DUDSAK	M O'LEARY
QUANTITIES	M O'LEARY	JOHN DATILES

STATE OF CALIFORNIA
DEPARTMENT OF TRANSPORTATION

DIVISION OF ENGINEERING SERVICES
STRUCTURE DESIGN
SPECIAL DESIGNS BRANCH

BRIDGE NO. 34-0157L
POST MILE X

PRESIDIO VIADUCT - LEFT
PEDESTAL DETAILS NO. 6

STRUCTURES DESIGN SPECIAL DESIGN SHEET (ENGLISH) (REV. 10-25-05)

ORIGINAL SCALE IN INCHES FOR REDUCED PLANS 0 1 2 3

CU 04
EA 163731
FILE => 04_163731_sd1_6.ccp

DISREGARD PRINTS BEARING EARLIER REVISION DATES →

REVISION DATES: 5/18/09 | 5/28/09 | 6-17-09 | 7-16-09 | 7-20-09 | 3-10-10

SHEET 89 OF 114

DIST	COUNTY	ROUTE	POST MILES TOTAL PROJECT	SHEET No	TOTAL SHEETS
04	SF	101,1	9.2/9.8, 6.8/7.1	440R1	567

Robert B. Giorgis 6-15-09
REGISTERED CIVIL ENGINEER DATE

7-20-09
PLANS APPROVAL DATE

The State of California or its officers or agents shall not be responsible for the accuracy or completeness of electronic copies of this plan sheet.

REGISTERED PROFESSIONAL ENGINEER — ROBERT B. GIORGIS JR. — No. C60705 — Exp. 12/31/10 — CIVIL — STATE OF CALIFORNIA

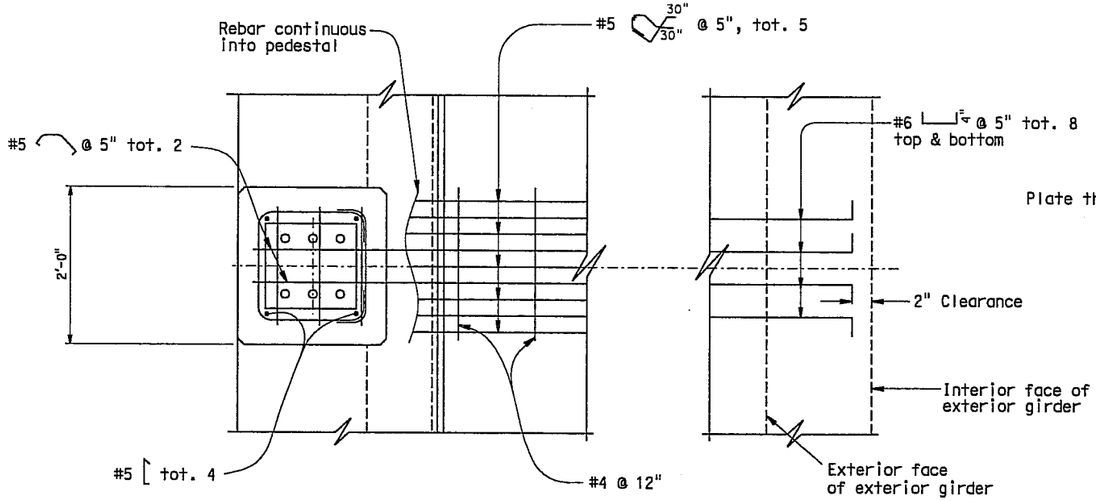

PLAN VIEW

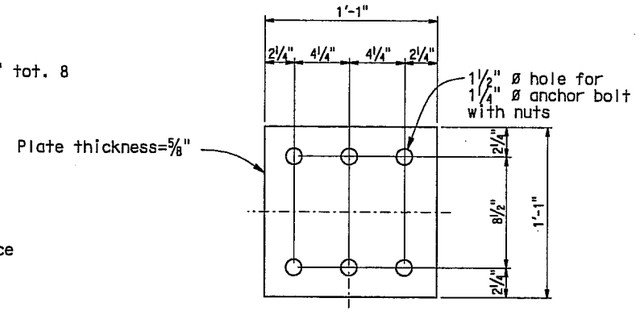

ANCHOR PLATE DETAIL

PROFILE VIEW

ELEVATION VIEW

Notes:

1. After plumbing standard, place nonshrink grout pad all around bolts. Finish sides with a 45° slope. Grout pad depth shall be 2" min to 3" max.
2. Electrolier anchor bolts shall be held in position for pouring by means of anchor plates and suitable templates.
3. Pedestal rebar shall have 3" concrete cover minimum unless noted.
4. For unmodified edge beam rebar and ST-10 rail anchorage, see "Detail B" of "TYPICAL SECTION NO. 3"
5. Longitudinal rebar of edge beam not shown for clarity in Plan view and Elevation view.
6. Deck rebar not shown for clarity. Transverse deck rebar and prestressing ducts not shown for clarity.
7. Anchor bolts shall be 1¼" ø x 26" all-threaded rod clamped to a ⅝" thick anchor plate with opposing nuts. Anchor bolts shall be ASTM F1554, Grade 55.
8. Top 7" of anchor bolts shall be galvanized.
9. Exterior corners of pedestal shall have 1" chamfers. Interior corners of pedestal shall have 1" fillets.
10. Pedestal shall be located between railing posts and between steel fins.
11. See sheet E-53 for base plate details.

REGISTERED PROFESSIONAL ENGINEER — ROBERT B. GIORGIS JR. — No. C60705 — Exp. 12/31/10 — CIVIL — STATE OF CALIFORNIA

MARK	DATE	REVISION(S) DESCRIPTIONS	DES	CHK	DET
1	3-10-10	Revised Entire sheet	RB		DJ

REGISTERED CIVIL ENGINEER: DATE: 3-10-10

CONTRACT CHANGE ORDER NO. _____
SHEET ___ OF ___

NOTE:
THE CONTRACTOR SHALL VERIFY ALL CONTROLLING FIELD DIMENSIONS BEFORE ORDERING OR FABRICATING ANY MATERIAL.

1 REVISED PER ADDENDUM No. 1 DATED AUGUST 13, 2009

1 PEDESTAL FOR CUSTOM LIGHT FIXTURE

NO SCALE **SD 1.7**

Jeffrey B Woody
BRANCH CHIEF

	BY	CHECKED
DESIGN	JOHN DATILES	M O'LEARY
DETAILS	D W JUSTICE Jr	M O'LEARY
QUANTITIES	M O'LEARY	JOHN DATILES

STATE OF CALIFORNIA
DEPARTMENT OF TRANSPORTATION

DIVISION OF ENGINEERING SERVICES
STRUCTURE DESIGN
SPECIAL DESIGNS BRANCH

BRIDGE NO. 34-0157L
POST MILE X

PRESIDIO VIADUCT - LEFT
PEDESTAL DETAILS NO. 7

STRUCTURES DESIGN SPECIAL DESIGN SHEET (ENGLISH) (REV. 10-25-05)

ORIGINAL SCALE IN INCHES FOR REDUCED PLANS 0 1 2 3

CU 04
EA 163731

FILE => 04 163731 sd1.7.ccp

DISREGARD PRINTS BEARING EARLIER REVISION DATES

REVISION DATES: 5/18/09 | 5/18/09 | 5/18/09 | 5/18/09 | 7-10-09 | 7-10-09 | 3-10-10

SHEET 90 OF 114

DIST	COUNTY	ROUTE	POST MILES TOTAL PROJECT	SHEET No	TOTAL SHEETS
04	SF	101,1	9.2/9.8, 6.8/7.1	441R1	567

Robert B. Giorgis Jr. 6-15-09
REGISTERED CIVIL ENGINEER DATE

7-20-09
PLANS APPROVAL DATE

The State of California or its officers or agents shall not be responsible for the accuracy or completeness of electronic copies of this plan sheet.

REGISTERED PROFESSIONAL ENGINEER LISA McCUTCHEON No. C70121 Exp. 9/30/10 CIVIL STATE OF CALIFORNIA

MARK	DATE	REVISION(S) DESCRIPTIONS	DES	CHK	DET
1	3-10-10	Revised entire sheet	LM		AD

REGISTERED CIVIL ENGINEER: DATE: 3-10-10

1

CONTRACT CHANGE ORDER NO. ____
SHEET ___ OF ___

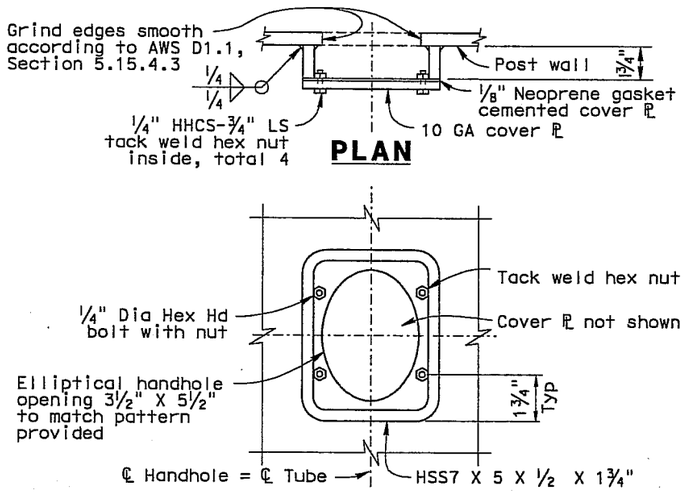

ELEVATION
DETAILS OF HANDHOLE & COVER

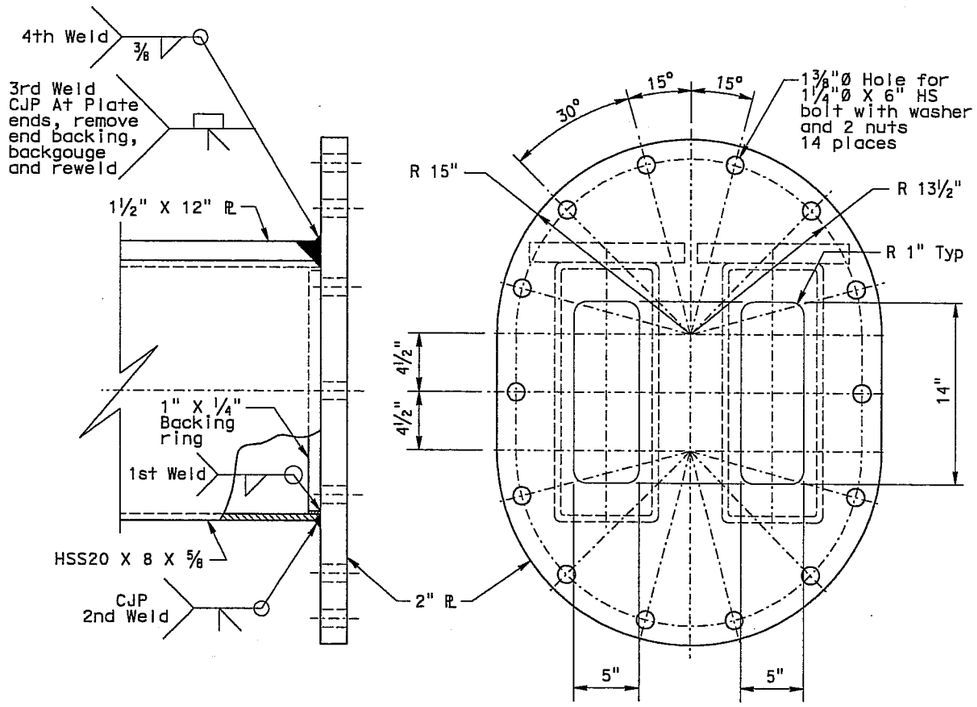

SPLICE PLATE DETAIL

NOTE:
THE CONTRACTOR SHALL VERIFY ALL CONTROLLING FIELD DIMENSIONS BEFORE ORDERING OR FABRICATING ANY MATERIAL.

1 REVISED PER ADDENDUM No. 1 DATED AUGUST 13, 2009

1 SIGN DETAILS NO. 1

NO SCALE

SD 1.8

Jeffrey B Woody
BRANCH CHIEF

	BY	CHECKED
DESIGN	M O'LEARY	JOHN DATILES
DETAILS	T.ZOLNIKOVA	M O'LEARY
QUANTITIES	M O'LEARY	JOHN DATILES

STATE OF CALIFORNIA
DEPARTMENT OF TRANSPORTATION

DIVISION OF ENGINEERING SERVICES
STRUCTURE DESIGN
SPECIAL DESIGNS BRANCH

BRIDGE NO. 34-0157L
POST MILE X

PRESIDIO VIADUCT - LEFT
PEDESTAL DETAILS NO. 8

STRUCTURES DESIGN SPECIAL DESIGN SHEET (ENGLISH) (REV. 10-25-05)

ORIGINAL SCALE IN INCHES FOR REDUCED PLANS 0 1 2 3

CU 04
EA 163731

FILE => 04_163731_sd1_8.dgn

DISREGARD PRINTS BEARING EARLIER REVISION DATES →

REVISION DATES: 5/14/09 | 5/18/09 | 6/2/09 | 6/4/09 | 6-16-09 | 7-20-09 | 7-30-09 | 3-10-10

SHEET 91 OF 114

DIST	COUNTY	ROUTE	POST MILES TOTAL PROJECT	SHEET No	TOT SHEE
04	SF	101,1	9.2/9.8, 6.8/7.1	442R1	56

Robert B. Giorgis 8-15-09
REGISTERED CIVIL ENGINEER DATE

7-20-09
PLANS APPROVAL DATE

The State of California or its officers or agents shall not be responsible for the accuracy or completeness of electronic copies of this plan sheet.

REGISTERED PROFESSIONAL ENGINEER — ROBERT B. GIORGIS JR. — No. C60705 — Exp. 12/31/10 — CIVIL — STATE OF CALIFORNIA

REGISTERED PROFESSIONAL ENGINEER — LISA McCUTCHEON — No. C70121 — Exp. 9/30/10 — CIVIL — STATE OF CALIFORNIA

MARK	DATE	REVISION(S) DESCRIPTIONS	DES	CHK	DET
1	3-10-10	Revised Entire Sheet	LM		AD

REGISTERED CIVIL ENGINEER: DATE: 3-10-10

CONTRACT CHANGE ORDER NO. ____
SHEET ___ OF ___

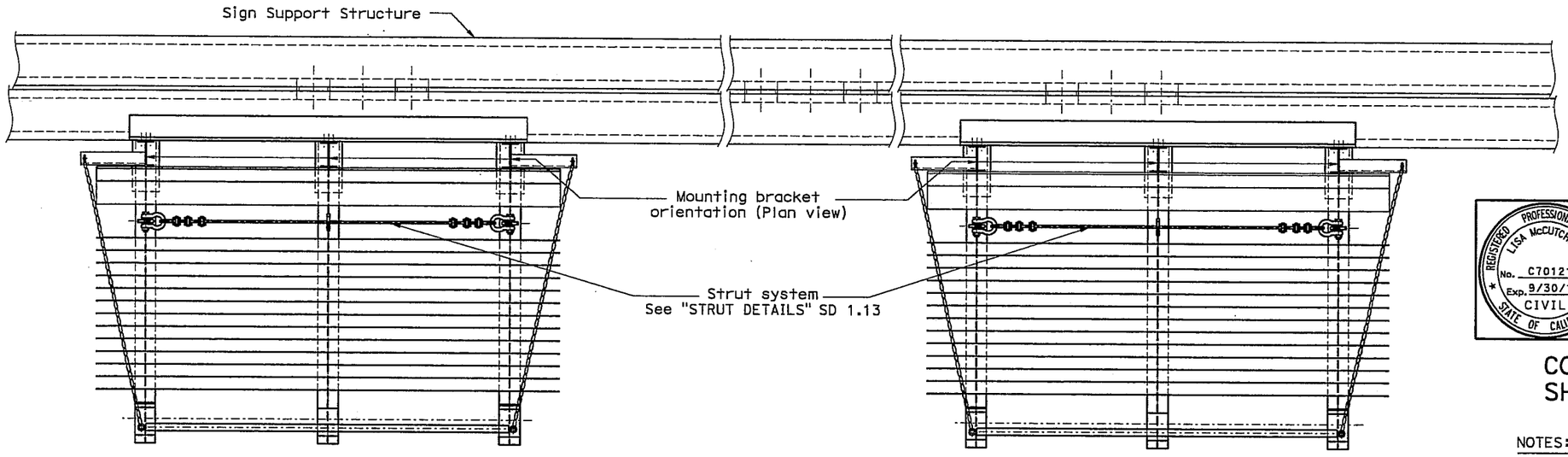

PLAN VIEW
¾"=1'-0"

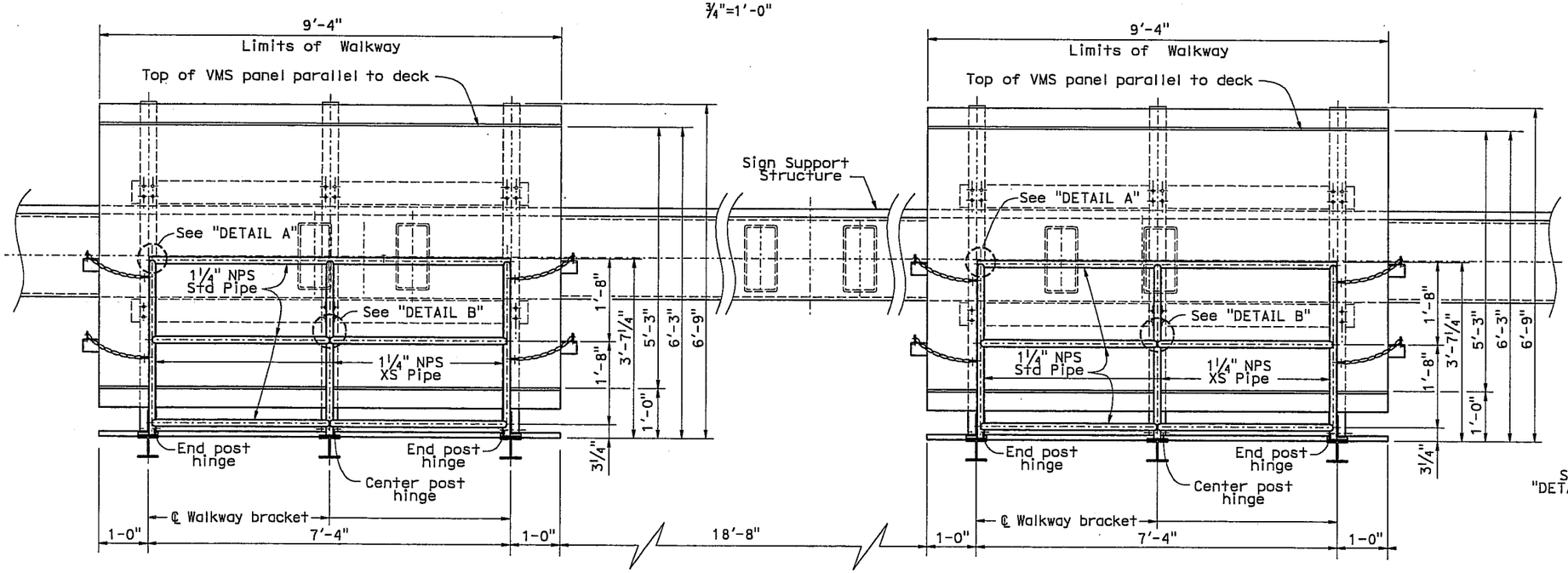

FRONT VIEW
¾"=1'-0"

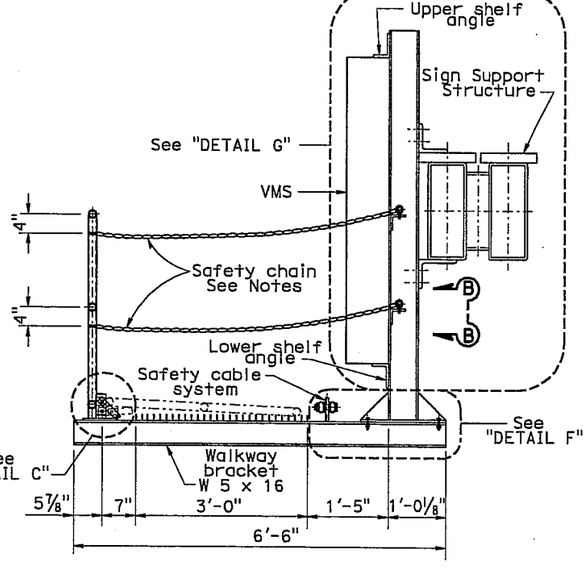

TYPICAL SECTION
¾"=1'-0"

NOTES:

1. See Sheet SD 1.10 for location of "Detail A", "Detail B", "Detail C" and Section B-B.
2. See Sheet SD 1.11 for location of "Detail F" and "Detail G".

NOTE:
THE CONTRACT SHALL VERIFY ALL CONTROLLING FIELD DIMENSIONS BEFORE ORDERING OR FABRICATING ANY MATERIAL.

1 REVISED PER ADDENDUM No. 1 DATED AUGUST 13, 2009

1 SIGN DETAILS NO. 2
NO SCALE

SD 1.9

Jeffrey B Woody
BRANCH CHIEF

	BY	CHECKED
DESIGN	R GIORGIS	M O'LEARY
DETAILS	D W JUSTICE Jr	M O'LEARY
QUANTITIES	M O'LEARY	J DATILES

STATE OF CALIFORNIA
DEPARTMENT OF TRANSPORTATION

DIVISION OF ENGINEERING SERVICES
STRUCTURE DESIGN
DESIGN BRANCH 4

BRIDGE NO. 34-0157L
POST MILE X

PRESIDIO VIADUCT - LEFT
PEDESTAL DETAILS NO. 9

STRUCTURES DESIGN DETAIL SHEET (ENGLISH) (REV. 10/25/05)

ORIGINAL SCALE IN INCHES FOR REDUCED PLANS 0 1 2 3

CU 04
EA 163731
FILE => 04_163731_sd1_9.dgn

DISREGARD PRINTS BEARING EARLIER REVISION DATES

REVISION DATES: 3-28-08 | 5-14-08 | 5-21-08 | 6-13-08 | 7-20-09 | 7-24-09 | 3-10-10

SHEET 92 OF 11

DIST	COUNTY	ROUTE	POST MILES TOTAL PROJECT	SHEET No	TOTAL SHEETS
04	SF	101,1	9.2/9.8, 6.8/7.1	443R1	567

Robert B. Giorgis 6-15-09
REGISTERED CIVIL ENGINEER DATE

7-20-09
PLANS APPROVAL DATE

REGISTERED PROFESSIONAL ENGINEER ROBERT B. GIORGIS JR. No. C60705 Exp. 12/31/10 CIVIL STATE OF CALIFORNIA

The State of California or its officers or agents shall not be responsible for the accuracy or completeness of electronic copies of this plan sheet.

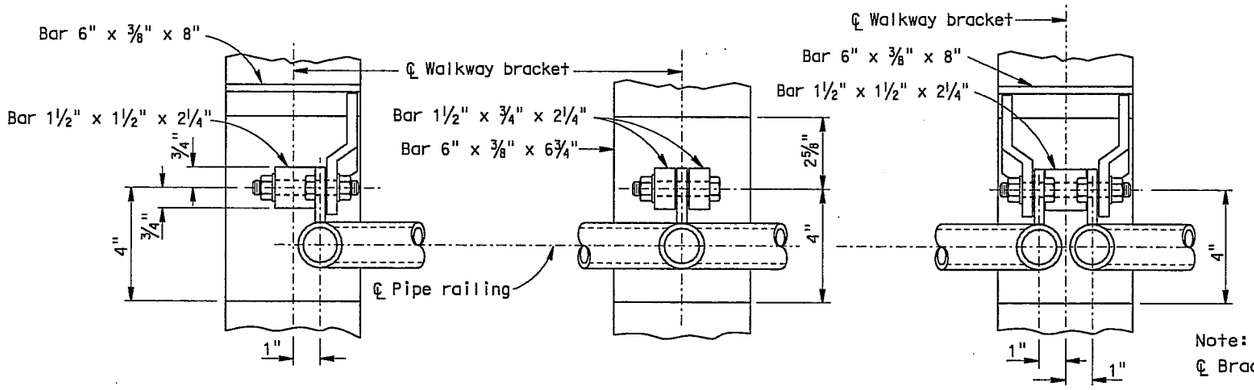

END POST HINGE | **CENTER POST WELDED HINGE - PLAN** | **TWO POST HINGE**

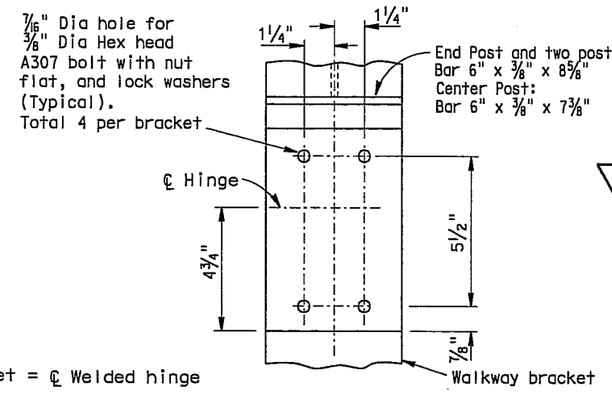

Note:
℄ Bracket = ℄ Welded hinge

TYPICAL BOLTED (ALTERNATIVE) HINGED CONNECTION

1

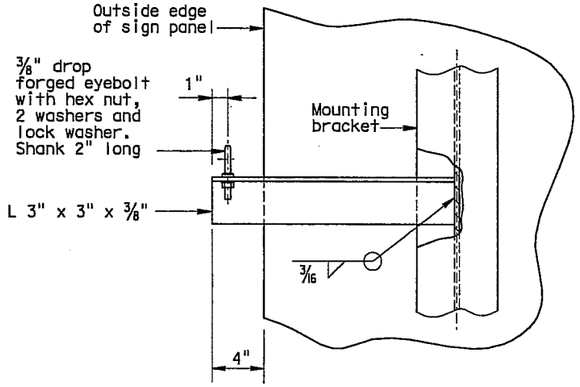

SECTION B-B

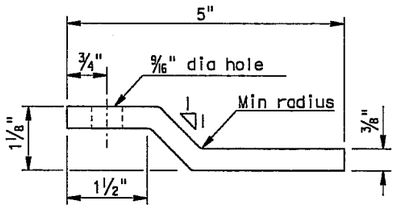

PLAN - KICKER BAR

NOTES:

1. See sheet SD 1.9 for location of "DETAIL A", "DETAIL B", "DETAIL C" and SECTION B-B.

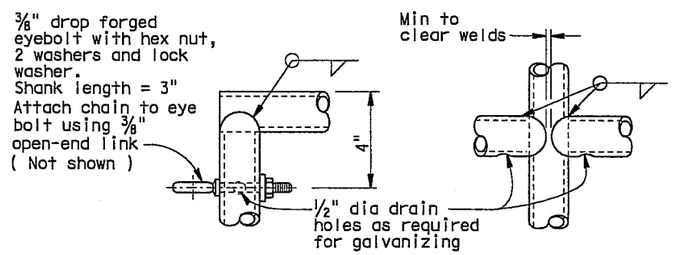

DETAIL A **DETAIL B**

Note: Alternative venting methods may be used if approved by the Engineer.

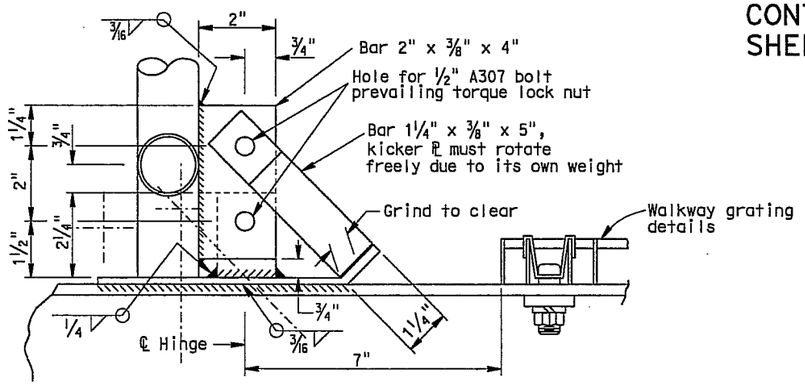

DETAIL C

NOTE:
THE CONTRACTOR SHALL VERIFY ALL CONTROLLING FIELD DIMENSIONS BEFORE ORDERING OR FABRICATING ANY MATERIAL.

1 **REVISED PER ADDENDUM No. 1 DATED AUGUST 13, 2009**

REGISTERED PROFESSIONAL ENGINEER LISA McCLUTCHEON No. C70121 Exp. 9/30/10 CIVIL STATE OF CALIFORNIA

MARK	DATE	REVISION(S) DESCRIPTIONS	DES	CHK	DET
1	3-10-10	Revised Entire Sheet	LM		AD

REGISTERED CIVIL ENGINEER: DATE: 3-10-10

CONTRACT CHANGE ORDER NO. ____
SHEET ___ OF ___

1 **SIGN DETAILS NO. 3**

SD 1.10

NO SCALE

Jeffrey B Woody
BRANCH CHIEF

	BY	CHECKED
DESIGN	M O'LEARY	B GIORGIS
DETAILS	D W JUSTICE Jr	M O'LEARY
QUANTITIES	M O'LEARY	JOHN DATILES

STATE OF **CALIFORNIA** DEPARTMENT OF TRANSPORTATION

DIVISION OF ENGINEERING SERVICES STRUCTURE DESIGN
SPECIAL DESIGNS BRANCH

BRIDGE NO. 34-0157L
POST MILE X

PRESIDIO VIADUCT - LEFT
PEDESTAL DETAILS NO. 10

STRUCTURES DESIGN SPECIAL DESIGN SHEET (ENGLISH) (REV. 10-25-05)

ORIGINAL SCALE IN INCHES FOR REDUCED PLANS 0 1 2 3

CU 04
EA 163731

DISREGARD PRINTS BEARING EARLIER REVISION DATES

REVISION DATES: 6-1-09 | 6-17-09 | 7-20-09 | 7-30-09 | 3-10-10

SHEET 93 OF 114

FILE => 04_163731_sd1_10.dgn

DIST	COUNTY	ROUTE	POST MILES TOTAL PROJECT	SHEET No	TOTAL SHEETS
04	SF	101,1	9.2/9.8, 6.8/7.1	444R1	567

Robert B. Giorgis 6-15-09
REGISTERED CIVIL ENGINEER DATE

7-20-09
PLANS APPROVAL DATE

The State of California or its officers or agents shall not be responsible for the accuracy or completeness of electronic copies of this plan sheet.

REGISTERED PROFESSIONAL ENGINEER — ROBERT B. GIORGIS JR. — No. C60705 — Exp. 12/31/10 — CIVIL — STATE OF CALIFORNIA

1

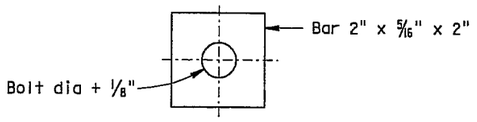

PLATE WASHER
FOR ALL SLOTTED HOLES

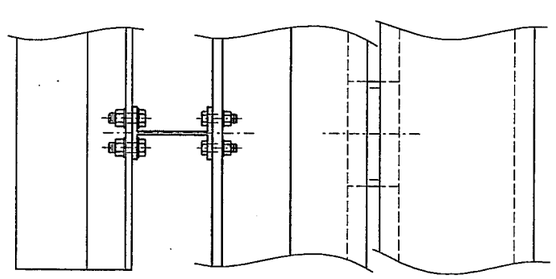

SECTION D-D

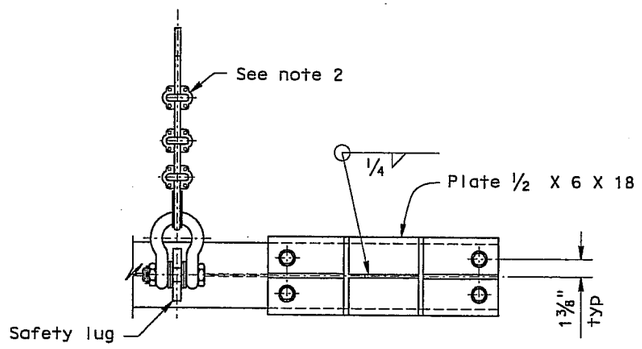

SECTION C-C

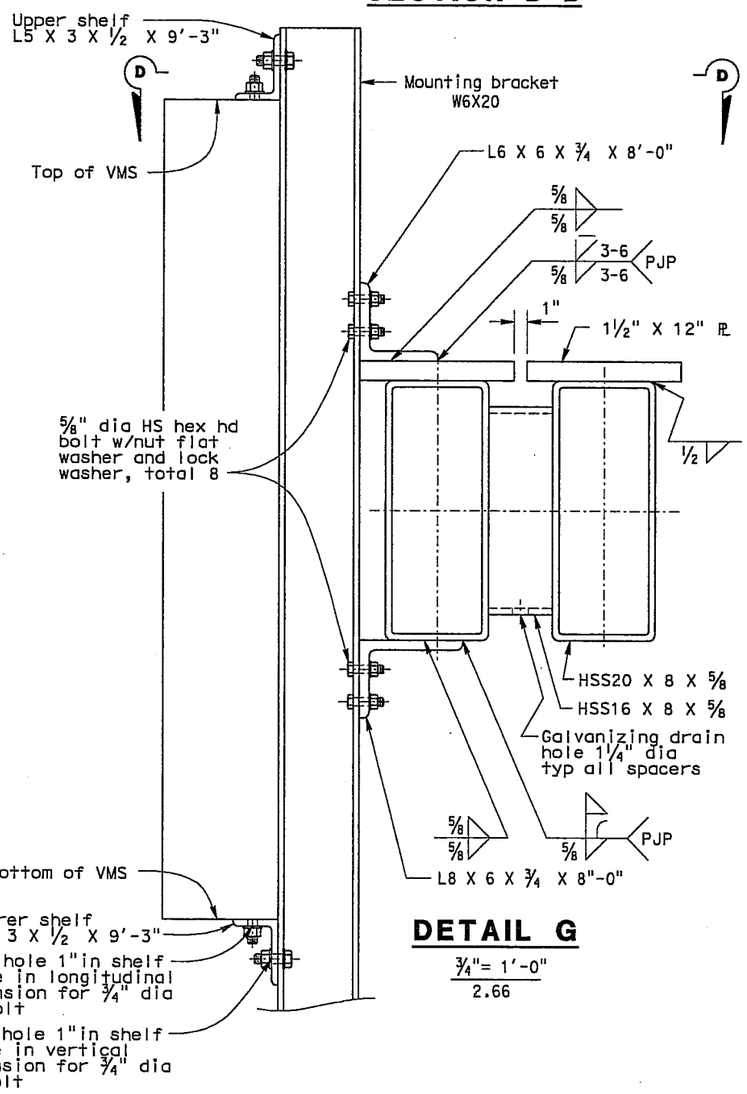

DETAIL G
3/4"= 1'-0"
2.66

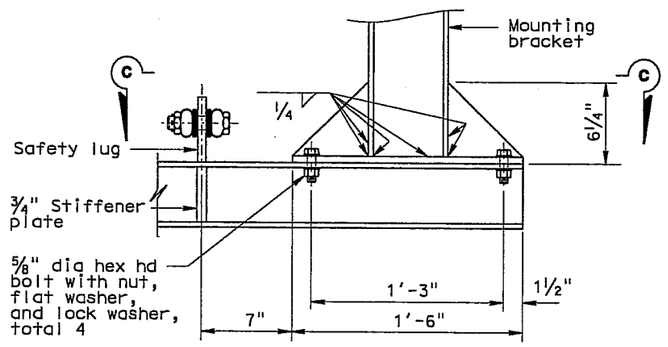

DETAIL F
1/4"= 1'-0"

NOTES:
1. See Sheet SD 1.9 for location of "Detail F" and "Detail G".
2. For Safety Cable Detail see sheet SD 1.12.

NOTE:
THE CONTRACTOR SHALL VERIFY ALL CONTROLLING FIELD DIMENSIONS BEFORE ORDERING OR FABRICATING ANY MATERIAL.

REGISTERED PROFESSIONAL ENGINEER — LISA McCUTCHEON — No. C70121 — Exp. 9/30/10 — CIVIL — STATE OF CALIFORNIA

MARK	DATE	REVISION(S) DESCRIPTIONS	DES	CHK	DET
1	3-10-10	Revised Entire Sheet	LM		AD

REGISTERED CIVIL ENGINEER: DATE: 3-10-10

CONTRACT CHANGE ORDER NO. ____
SHEET ___ OF ___

⚠ SIGN DETAILS NO. 4

1 REVISED PER ADDENDUM No. 1 DATED AUGUST 13, 2009

SD 1.11

Jeffrey B Woody
BRANCH CHIEF

	BY	CHECKED
DESIGN	M O'LEARY	B GIORGIS
DETAILS	D W JUSTICE Jr	M O'LEARY
QUANTITIES	M O'LEARY	JOHN DATILES

STATE OF CALIFORNIA
DEPARTMENT OF TRANSPORTATION

DIVISION OF ENGINEERING SERVICES
STRUCTURE DESIGN
SPECIAL DESIGNS BRANCH

BRIDGE NO. 34-0157L
POST MILE X

PRESIDIO VIADUCT - LEFT
PEDESTAL DETAILS NO. 11

STRUCTURES DESIGN SPECIAL DESIGN SHEET (ENGLISH) (REV. 10-25-05)

ORIGINAL SCALE IN INCHES FOR REDUCED PLANS 0 1 2 3

CU 04
EA 163731

DISREGARD PRINTS BEARING EARLIER REVISION DATES →

REVISION DATES: 6-1-05 | 6-14-09 | 7-20-09 | 7-30-09 | 3-10-10

SHEET 94 OF 114

FILE => 04_163731_sd1_11.dgn

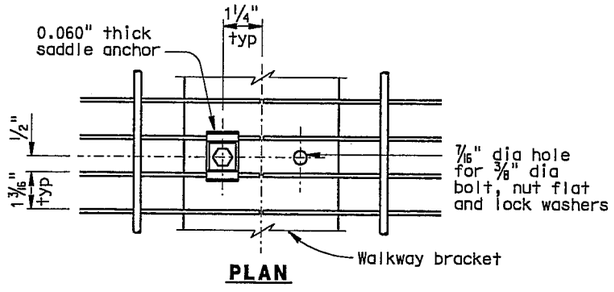

PLAN

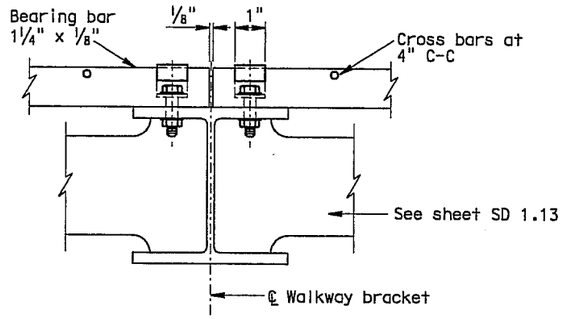

WALKWAY GRATING DETAILS
(Shown at splice)

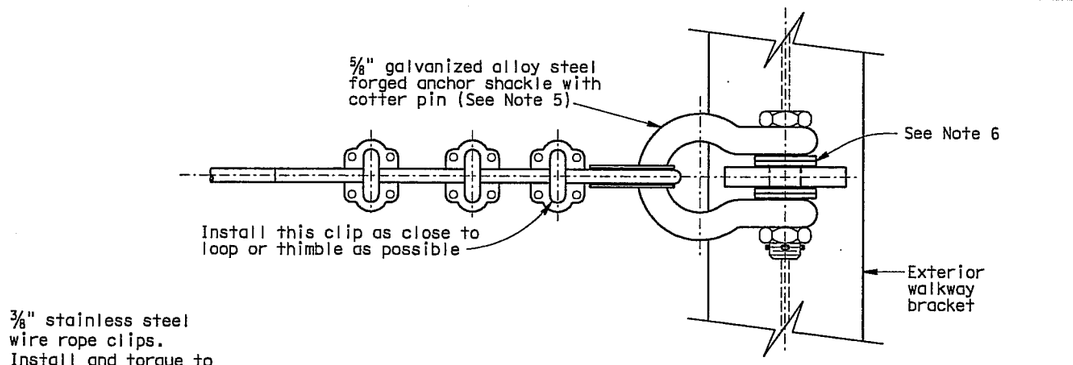

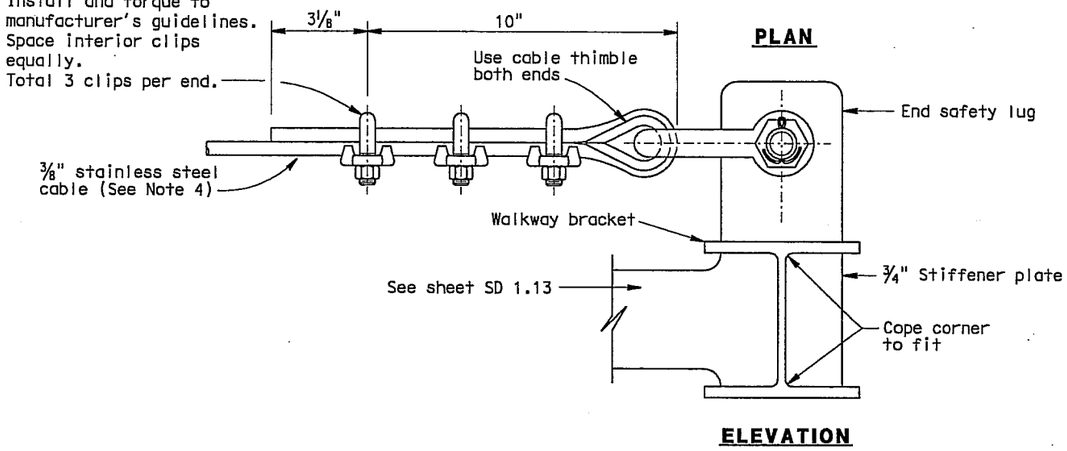

PLAN

ELEVATION

END VIEW SAFETY CABLE

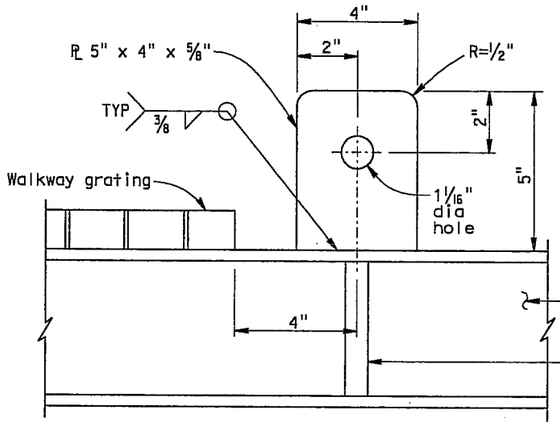

INTERIOR SAFETY LUG DETAIL

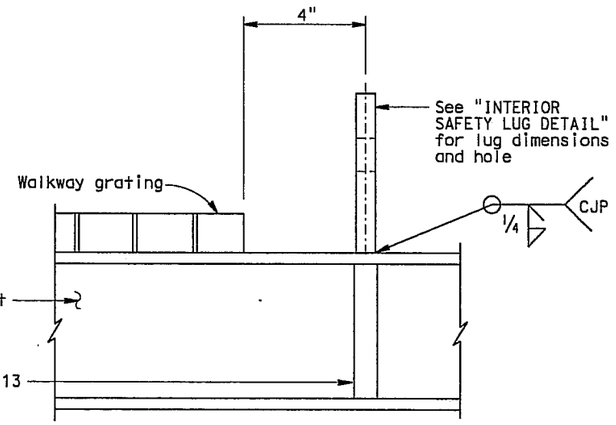

END SAFETY LUG DETAIL

NOTES:

1. Welded type grating shall have 1¼" x ⅛" bearing bars at 1³⁄₁₆" centers with ¼" diameter (or equal) cross bars at 4" centers. If mechanical lock grating is used, it shall be equal in strength to the welded type. Alternate hold-down clips may be submitted to engineer for approval.
2. Walkway grating and light fixture mounting channels to be continuous (no splices) over as many walkway brackets as practical and consistent with fabrication, ease of handling and assembly.
3. Contractor may substitute 1⅝" x 1⅝" x .1084" cont-slot steel channel with pre-punched slots not larger than ⅞" x 3". Slots shall be at bottom of channel and shall be parallel to channel. Slots shall be spaced not closer than 4" center to center.
4. Stainless steel cable shall be 7 x 19 class strand core construction using Type 302 or 304 alloy stainless steel strands. Minimum cable breaking strength shall be 10,000 pounds. Cable shall be free of kinks, knots, or deformation and shall be continuous between end lugs. Splices not allowed. Safety cable shall not be prestretched.
5. Shackle shall be galvanized steel with working load limit of 10,000 pounds.
6. Place an equal amount of washers on each side to align cable with end lug without restricting shackle bolt rotation or contacting cable.
7. Prior to tightening cable clips at exterior anchorage, slack in cable shall be removed by the full effort of a typical construction worker.

NOTE:
THE CONTRACTOR SHALL VERIFY ALL CONTROLLING FIELD DIMENSIONS BEFORE ORDERING OR FABRICATING ANY MATERIAL.

1 REVISED PER ADDENDUM No. 1 DATED AUGUST 13, 2009

1 SIGN DETAILS NO. 5

SD 1.12

NO SCALE

DIST	COUNTY	ROUTE	POST MILES TOTAL PROJECT	SHEET No	TOTAL SHEETS
04	SF	101,1	9.2/9.8, 6.8/7.1,	445R1	567

Robert B. Giorgis 6-15-09
REGISTERED CIVIL ENGINEER DATE

7-20-09
PLANS APPROVAL DATE

The State of California or its officers or agents shall not be responsible for the accuracy or completeness of electronic copies of this plan sheet.

REGISTERED PROFESSIONAL ENGINEER ROBERT B. GIORGIS JR. No. C60705 Exp. 12/31/10 CIVIL STATE OF CALIFORNIA

1

REGISTERED PROFESSIONAL ENGINEER LISA McCUTCHEON No. C70121 Exp. 9/30/10 CIVIL STATE OF CALIFORNIA

MARK	DATE	REVISION(S) DESCRIPTIONS	DES	CHK	DET
1	3-10-10	Revised Entire Sheet	LM		AD

REGISTERED CIVIL ENGINEER: DATE: 3-10-10

CONTRACT CHANGE ORDER NO. ____
SHEET ___ OF ___

Jeffrey B Woody
BRANCH CHIEF

	BY	CHECKED
DESIGN	M O'LEARY	JOHN DATILES
DETAILS	D W JUSTICE Jr	JOHN DATILES
QUANTITIES	M O'LEARY	JOHN DATILES

STATE OF CALIFORNIA
DEPARTMENT OF TRANSPORTATION

DIVISION OF ENGINEERING SERVICES
STRUCTURE DESIGN
SPECIAL DESIGNS BRANCH

BRIDGE NO. 34-0157L
POST MILE X

PRESIDIO VIADUCT - LEFT
PEDESTAL DETAILS NO. 12

STRUCTURES DESIGN SPECIAL DESIGN SHEET (ENGLISH) (REV. 10-25-05)

ORIGINAL SCALE IN INCHES FOR REDUCED PLANS 0 1 2 3

CU 04
EA 163731

FILE => 04_163731_sd1_12.dgn

DISREGARD PRINTS BEARING EARLIER REVISION DATES

REVISION DATES: 6-1-09 | 6-12-09 | 7-20-09 | 7-30-09 | 3-10-10

SHEET 95 OF 114

DIST	COUNTY	ROUTE	POST MILES TOTAL PROJECT	SHEET No	TOTAL SHEETS
04	SF	101,1	9.2/9.8, 6.8/7.1	446R1	567

Robert B. Giorgis Jr. 6-15-09
REGISTERED CIVIL ENGINEER DATE

7-20-09
PLANS APPROVAL DATE

The State of California or its officers or agents shall not be responsible for the accuracy or completeness of electronic copies of this plan sheet.

REGISTERED PROFESSIONAL ENGINEER ROBERT B. GIORGIS JR. No. C60705 Exp. 12/31/10 CIVIL STATE OF CALIFORNIA

1

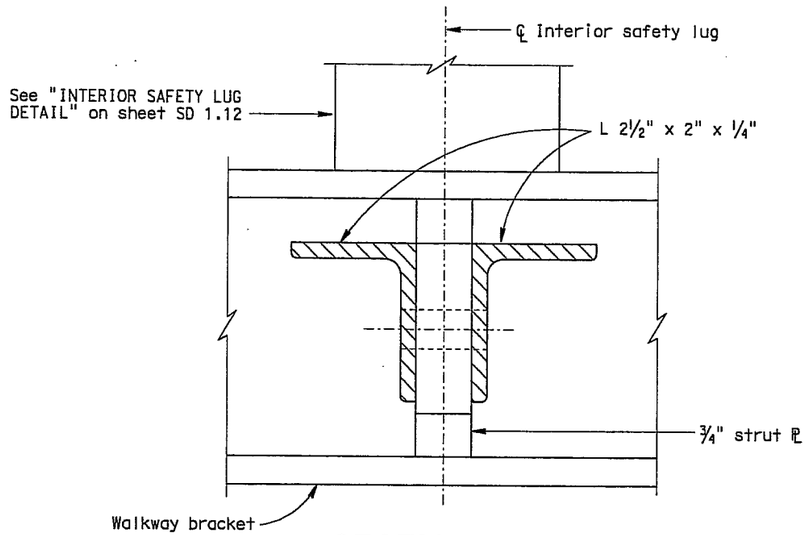

SECTION E-E

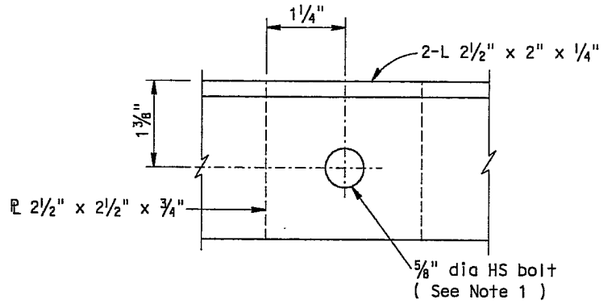

FILLER PLATE (TYP)

REGISTERED PROFESSIONAL ENGINEER LISA McCUTCHEON No. C70121 Exp. 9/30/10 CIVIL STATE OF CALIFORNIA

MARK	DATE	REVISION(S) DESCRIPTIONS	DES	CHK	DET
1	3-10-10	Revised Entire Sheet	LM		AD

REGISTERED CIVIL ENGINEER: DATE: 3-10-10

CONTRACT CHANGE ORDER NO. ____
SHEET ___ OF ___

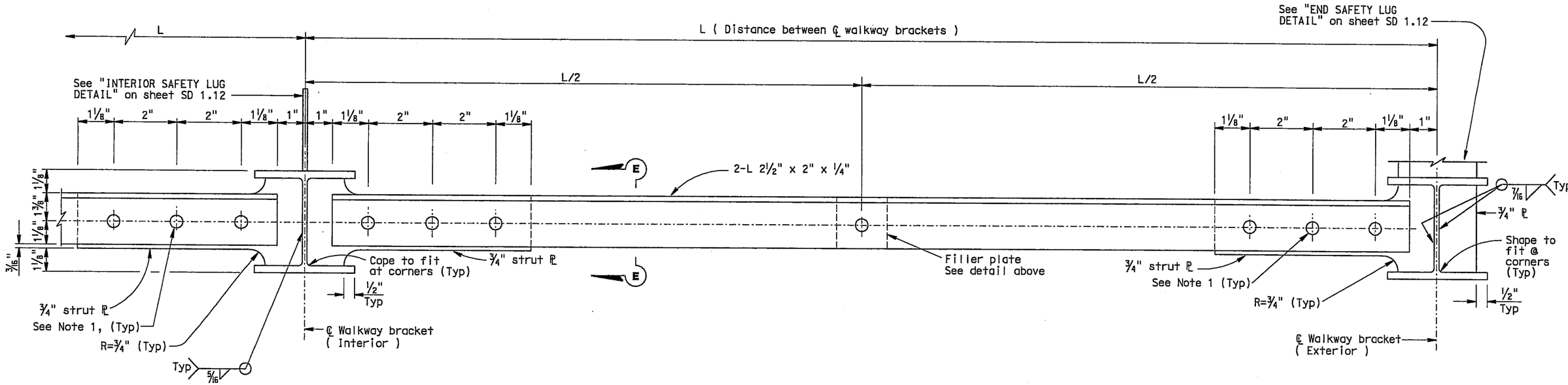

INTERIOR SAFETY LUG LOCATION (TYP)

STRUT SYSTEM (TYP)

(Continuous between end safety lug locations)

END SAFETY LUG LOCATION (TYP)

NOTE:

1. Drill ¾" dia hole for ⅝" dia HS bolt, 2 hardened washers and nut.

NOTE:
THE CONTRACTOR SHALL VERIFY ALL CONTROLLING FIELD DIMENSIONS BEFORE ORDERING OR FABRICATING ANY MATERIAL.

1 REVISED PER ADDENDUM No. 1 DATED AUGUST 13, 2009

⚠1 SIGN DETAILS NO. 6

NO SCALE

SD 1.13

Jeffrey B Woody
BRANCH CHIEF

	BY	CHECKED
DESIGN	M O'LEARY	JOHN DATILES
DETAILS	D W JUSTICE Jr	JOHN DATILES
QUANTITIES	M O'LEARY	JOHN DATILES

STATE OF CALIFORNIA
DEPARTMENT OF TRANSPORTATION

DIVISION OF ENGINEERING SERVICES
STRUCTURE DESIGN
SPECIAL DESIGNS BRANCH

CU 04
EA 163731

BRIDGE NO. 34-0157L
POST MILE X

PRESIDIO VIADUCT - LEFT
PEDESTAL DETAILS NO. 13

STRUCTURES DESIGN SPECIAL DESIGN SHEET (ENGLISH) (REV. 10-25-05)

ORIGINAL SCALE IN INCHES FOR REDUCED PLANS 0 1 2 3

DISREGARD PRINTS BEARING EARLIER REVISION DATES

REVISION DATES: 5-1-09 | 5-14-09 | 7-20-09 | 7-30-09 | 3-10-10

SHEET 96 OF 114

DIST	COUNTY	ROUTE	POST MILES TOTAL PROJECT	SHEET No	TOTAL SHEETS
04	SF	101,1	9.2/9.8, 6.8/7.1	446R1	567

Robert B. Giorgis 6-15-09
REGISTERED CIVIL ENGINEER DATE

7-20-09
PLANS APPROVAL DATE

The State of California or its officers or agents shall not be responsible for the accuracy or completeness of electronic copies of this plan sheet.

REGISTERED PROFESSIONAL ENGINEER — ROGER B. GIORGIS JR. — No. C60705 — Exp. 12/31/10 — CIVIL — STATE OF CALIFORNIA

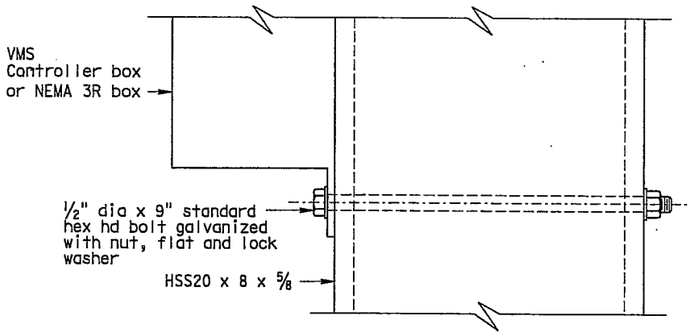

DETAIL A

REGISTERED PROFESSIONAL ENGINEER — LISA McCUTCHEON — No. C70121 — Exp. 9/30/10 — CIVIL — STATE OF CALIFORNIA

MARK	DATE	REVISION(S) DESCRIPTIONS	DES	CHK	DET
1	3-10-10	Revised Entire Sheet	LM		AD

REGISTERED CIVIL ENGINEER: DATE: 3-10-10

CONTRACT CHANGE ORDER NO. ____
SHEET ___ OF ___

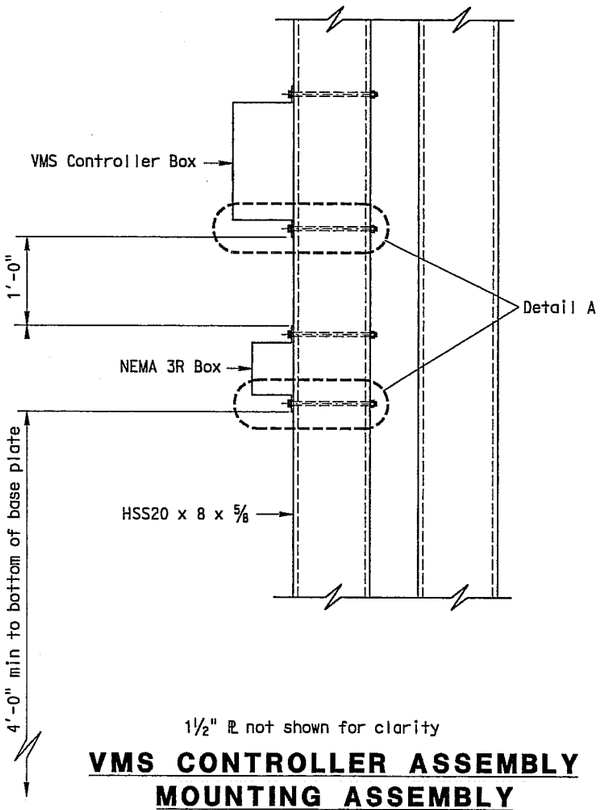

VMS CONTROLLER ASSEMBLY MOUNTING ASSEMBLY

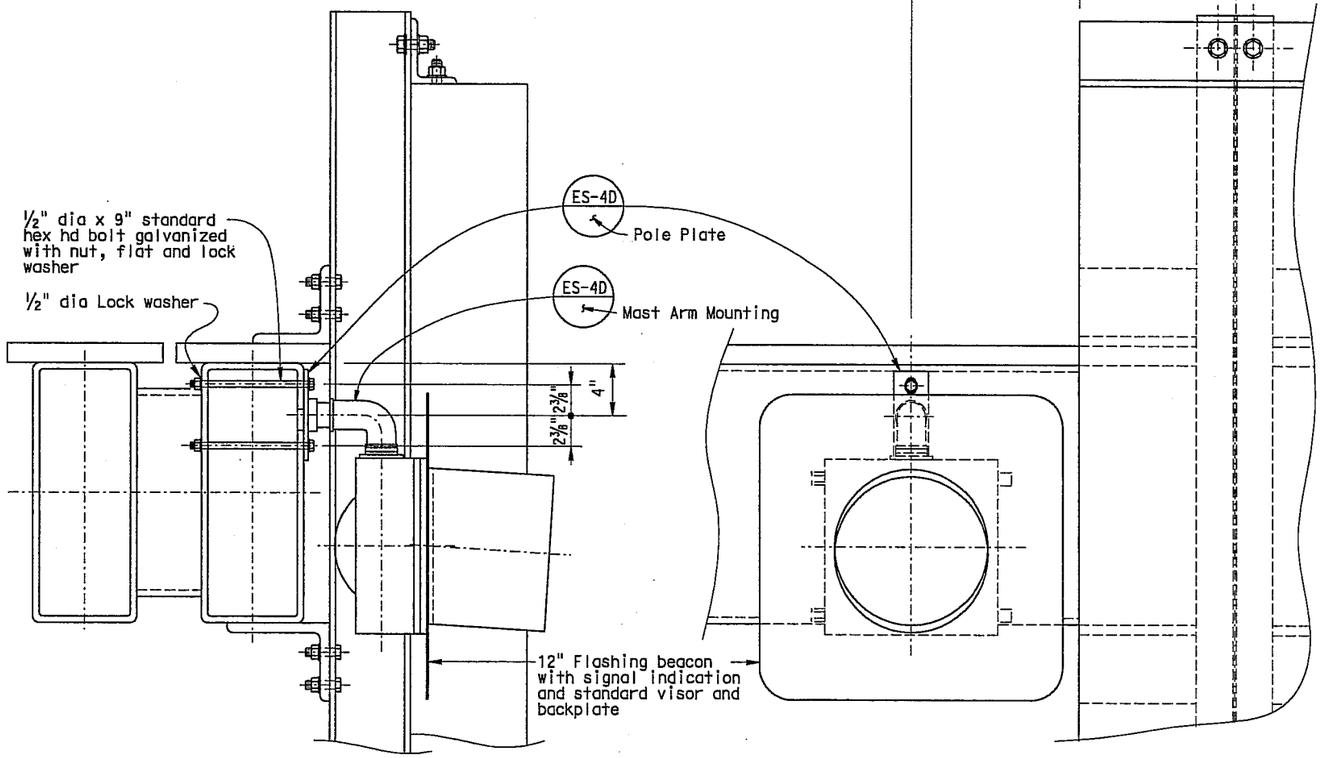

FLASHING BEACON WITH SIGNAL ASSEMBLY MOUNTING ASSEMBLY

NOTES:

1. Conduit for VMS Controller assembly not shown.
2. Drilled holes for electrical wires, in post shall not exceed 1¼" and shall be spaced 12"min in all directions.
3. Maximum weight of individual box shall not exceed 50 lbs.
4. Details show an acceptable method of mounting VMS Controller assembly on two post Variable Message Sign on the Presideo Viaduct. For variations of other enclosure cabinets, the contractor shall submit mounting methods in writing, for approval by the engineer.
5. Refer to sheet SD 1.1 and SD 1.11 for sign pole details.
6. VMS Controller assembly to be mounted on pole away from approaching traffic.
7. See Road Plans for quantities.

NOTE:
THE CONTRACTOR SHALL VERIFY ALL CONTROLLING FIELD DIMENSIONS BEFORE ORDERING OR FABRICATING ANY MATERIAL.

1 ADDED PER ADDENDUM No. 1 DATED AUGUST 13, 2009

SD 1.14

NO SCALE

Jeffrey B Woody
BRANCH CHIEF

	BY	CHECKED
DESIGN	M O'LEARY	BOB GIORGIS
DETAILS	D W JUSTICE Jr	M O'LEARY
QUANTITIES	M O'LEARY	BOB GIORGIS

STATE OF CALIFORNIA
DEPARTMENT OF TRANSPORTATION

DIVISION OF ENGINEERING SERVICES
STRUCTURE DESIGN
SPECIAL DESIGNS BRANCH

BRIDGE NO. 34-0157L
POST MILE X

PRESIDIO VIADUCT - LEFT
SIGN DETAILS NO. 1

STRUCTURES DESIGN SPECIAL DESIGN SHEET (ENGLISH) (REV. 10-25-05)

ORIGINAL SCALE IN INCHES FOR REDUCED PLANS 0 1 2 3

CU 04
EA 163731

DISREGARD PRINTS BEARING EARLIER REVISION DATES →

REVISION DATES: 1 7-20-09 | 7-30-09

SHEET 97 OF 11

DIST	COUNTY	ROUTE	POST MILES TOTAL PROJECT	SHEET No	TOTA SHEET
04	SF	101,1	9.2/9.8, 6.8/7.1,	515R1	567

Robert B. Giorgis Jr.
REGISTERED CIVIL ENGINEER DATE

7-20-09
PLANS APPROVAL DATE

REGISTERED PROFESSIONAL ENGINEER ROBERT B. GIORGIS JR. No. C60705 Exp. 12/31/10 CIVIL STATE OF CALIFORNIA

The State of California or its officers or agents shall not be responsible for the accuracy or completeness of electronic copies of this plan sheet.

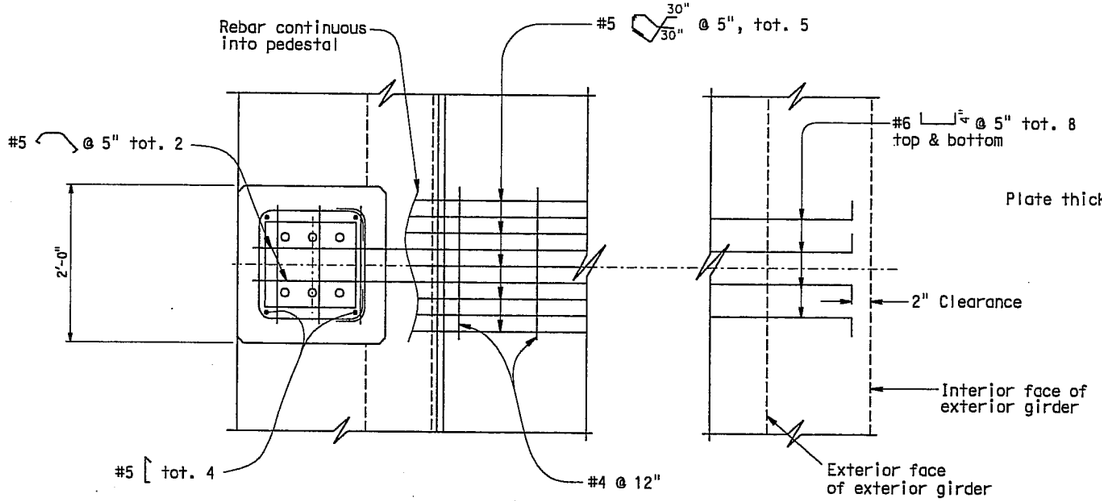

PLAN VIEW

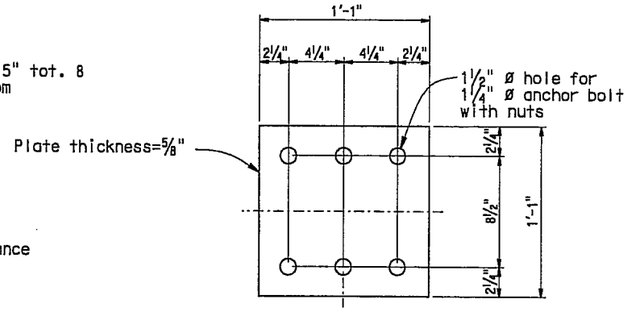

ANCHOR PLATE DETAIL

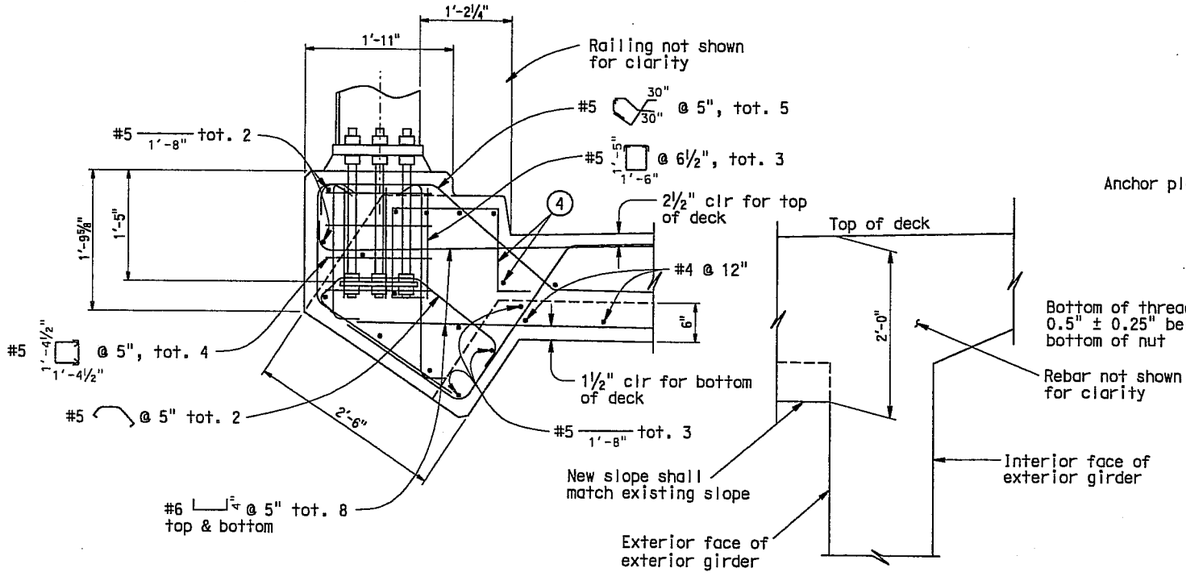

PROFILE VIEW

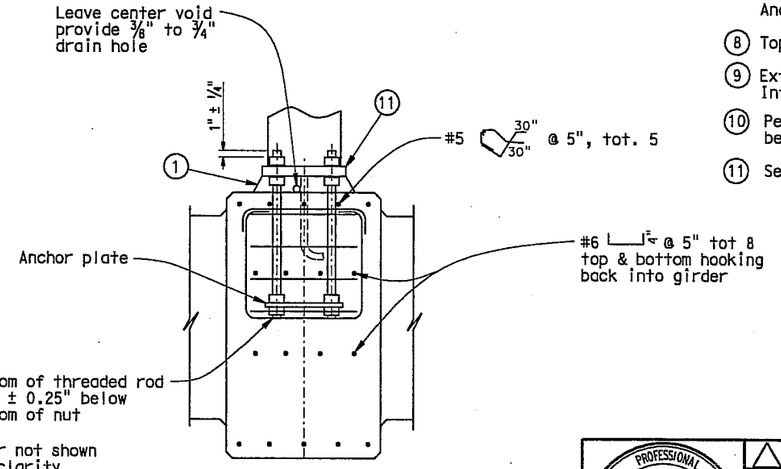

ELEVATION VIEW

Notes:

1. After plumbing standard, place nonshrink grout pad all around bolts. Finish sides with a 45° slope. Grout pad depth shall be 2" min to 3" max.
2. Electrolier anchor bolts shall be held in position for pouring by means of anchor plates and suitable templates.
3. Pedestal rebar shall have 3" concrete cover minimum unless noted.
4. For unmodified edge beam rebar and ST-10 rail anchorage, see "Detail C" of "TYPICAL SECTION NO. 1"
5. Longitudinal rebar of edge beam not shown for clarity in Plan view and Elevation view.
6. Deck rebar not shown for clarity. Transverse deck rebar and prestressing ducts not shown for clarity.
7. Anchor bolts shall be 1¼" ø x 26" all-threaded rod clamped to a ⅝" thick anchor plate with opposing nuts. Anchor bolts shall be ASTM F1554, Grade 55.
8. Top 7" of anchor bolts shall be galvanized.
9. Exterior corners of pedestal shall have 1" chamfers. Interior corners of pedestal shall have 1" fillets.
10. Pedestal shall be located between railing posts and between steel fins.
11. See sheet E-53 for base plate details.

NOTE:
THE CONTRACTOR SHALL VERIFY ALL CONTROLLING FIELD DIMENSIONS BEFORE ORDERING OR FABRICATING ANY MATERIAL.

REGISTERED PROFESSIONAL ENGINEER ROBERT B. GIORGIS JR. No. C60705 Exp. 12/31/10 CIVIL STATE OF CALIFORNIA

MARK	DATE	REVISION(S) DESCRIPTIONS	DES	CHK	DET
1	3-10-10	Revised Entire sheet	RB		DJ

REGISTERED CIVIL ENGINEER: DATE: 3-10-10

CONTRACT CHANGE ORDER NO. ____
SHEET ___ OF ___

1 REVISED PER ADDENDUM No. 1 DATED AUGUST 13, 2009

1 PEDESTAL FOR CUSTOM LIGHT FIXTURE

NO SCALE **SD 5.2**

Jeffrey B Woody
BRANCH CHIEF

	BY	CHECKED
DESIGN	JOHN DATILES	M O'LEARY
DETAILS	D W JUSTICE Jr	M O'LEARY
QUANTITIES	M O'LEARY	JOHN DATILES

STATE OF **CALIFORNIA** DEPARTMENT OF TRANSPORTATION

DIVISION OF ENGINEERING SERVICES STRUCTURE DESIGN
SPECIAL DESIGNS BRANCH

BRIDGE NO. 34-0160G
POST MILE X

N1-S101 CONNECTOR
PEDESTAL DETAILS NO. 2

STRUCTURES DESIGN SPECIAL DESIGN SHEET (ENGLISH) (REV. 10-25-05)

ORIGINAL SCALE IN INCHES FOR REDUCED PLANS 0 1 2 3

CU 04
EA 163731

DISREGARD PRINTS BEARING EARLIER REVISION DATES →

REVISION DATES: 5/18/09 | 5/18/09 | 5/18/09 | 5-27-09 | 7-21-09 | 7-21-09 | 3-10-10

SHEET 2 OF 6

FILE => 04_163731_sd5.3.dgn

DIST	COUNTY	ROUTE	POST MILES TOTAL PROJECT	SHEET No	TOTAL SHEETS
04	SF	101,1	9.2/9.8, 6.8/7.1	516R1	567

Robert B. Giorgis Jr. 6-15-09
REGISTERED CIVIL ENGINEER DATE

7-20-09
PLANS APPROVAL DATE

The State of California or its officers or agents shall not be responsible for the accuracy or completeness of electronic copies of this plan sheet.

REGISTERED PROFESSIONAL ENGINEER — ROBERT B. GIORGIS JR. — No. C60705 — Exp. 12/31/10 — CIVIL — STATE OF CALIFORNIA

MARK	DATE	REVISION(S) DESCRIPTIONS	DES	CHK	DET
1	3-10-10	Revised Entire sheet	RB		DJ

REGISTERED CIVIL ENGINEER: DATE: 3-10-10

CONTRACT CHANGE ORDER NO. ____
SHEET ___ OF ___

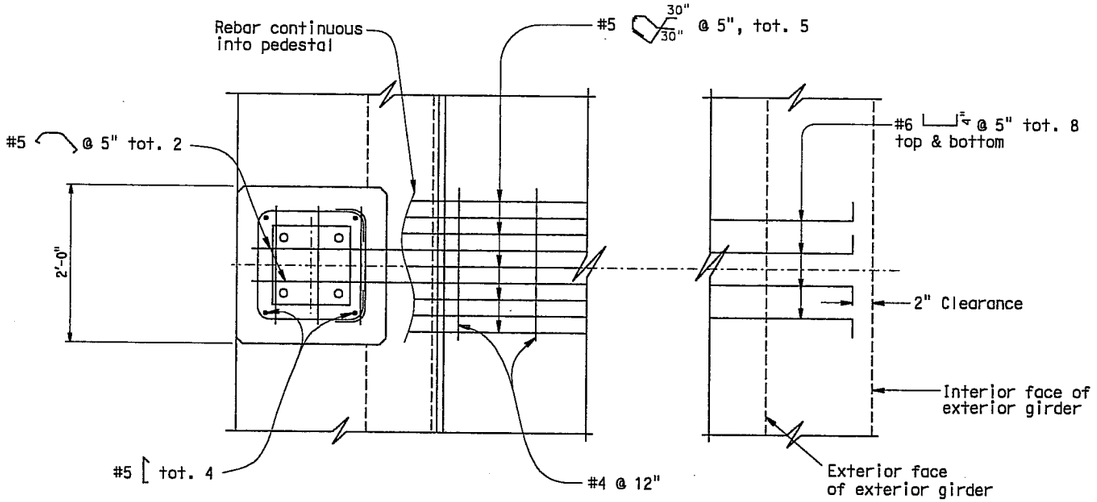

PLAN VIEW

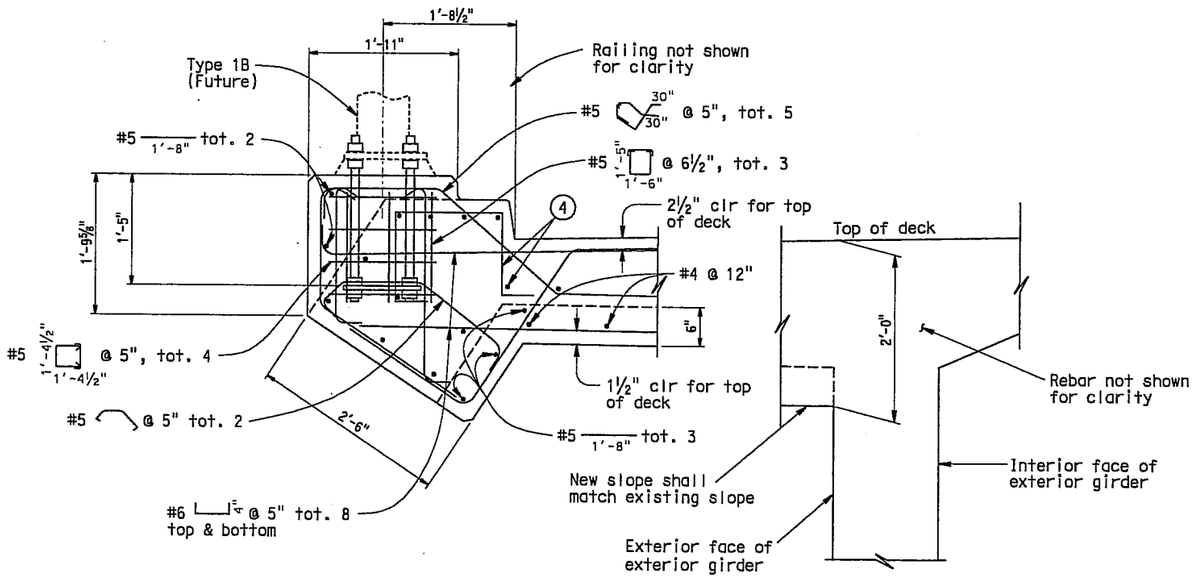

PROFILE VIEW

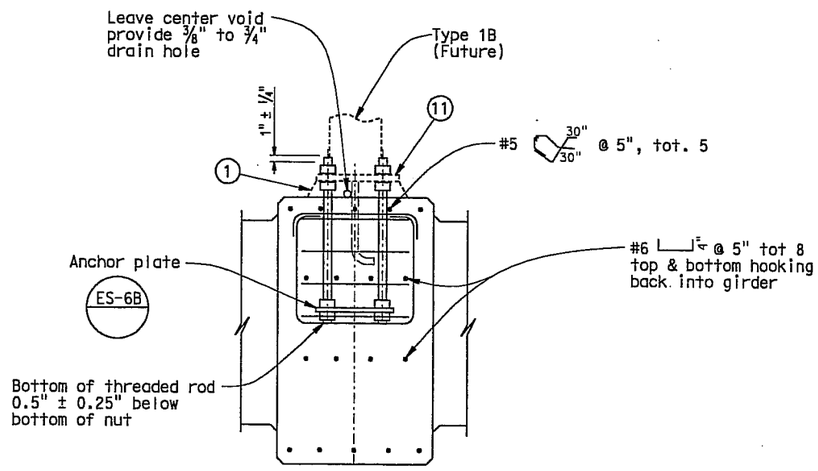

ELEVATION VIEW

Notes:

1. After plumbing standard, place nonshrink grout pad all around bolts. Finish sides with a 45° slope. Grout pad depth shall be 2" min to 3" max.
2. Electrolier anchor bolts shall be held in position for pouring by means of anchor plates and suitable templates.
3. Pedestal rebar shall have 3" concrete cover minimum unless noted.
4. For unmodified edge beam rebar and ST-10 rail anchorage, see "Detail C" of "TYPICAL SECTION NO. 1"
5. Longitudinal rebar of edge beam not shown for clarity in Plan view and Elevation view.
6. Deck rebar not shown for clarity. Transverse deck rebar and prestressing ducts not shown for clarity.
7. Anchor bolts shall be 1" ø x 26" all-threaded rod clamped to a ⅝" thick anchor plate with opposing nuts. Anchor bolts shall be ASTM A307.
8. Top 7" of anchor bolts shall be galvanized.
9. Exterior corners of pedestal shall have 1" chamfers. Interior corners of pedestal shall have 1" fillets.
10. Pedestal shall be located between railing posts and between steel fins.
11. See Standard Plans ES-6A for base plate details.

NOTE:
THE CONTRACTOR SHALL VERIFY ALL CONTROLLING FIELD DIMENSIONS BEFORE ORDERING OR FABRICATING ANY MATERIAL.

1 REVISED PER ADDENDUM No. 1 DATED AUGUST 13, 2009

1

PEDESTAL FOR TYPE 1B STANDARD (FUTURE)

NO SCALE

SD 5.3

Jeffrey B Woody
BRANCH CHIEF

	BY	CHECKED
DESIGN	M O'LEARY	JOHN DATILES
DETAILS	T. ZOLNIKOVA	M O'LEARY
QUANTITIES	M O'LEARY	JOHN DATILES

STATE OF CALIFORNIA
DEPARTMENT OF TRANSPORTATION

DIVISION OF ENGINEERING SERVICES
STRUCTURE DESIGN
SPECIAL DESIGNS BRANCH

BRIDGE NO. 34-0160G
POST MILE X

N1 - S101 CONNECTOR
PEDESTAL DETAILS NO. 3

STRUCTURES DESIGN SPECIAL DESIGN SHEET (ENGLISH) (REV. 10-25-05)

ORIGINAL SCALE IN INCHES FOR REDUCED PLANS 0 1 2 3

CU 04
EA 163731

DISREGARD PRINTS BEARING EARLIER REVISION DATES →

REVISION DATES: 5/14/09 | 5/18/09 | 6/2/09 | 6/4/09 | 7-10-09 | 7-27-09 | 3-10-10

SHEET 3 OF 6

DIST	COUNTY	ROUTE	POST MILES TOTAL PROJECT	SHEET No	TOT SHEET
04	SF	101,1	9.2/9.8, 6.8/7.1	156R1	567

REGISTERED CIVIL ENGINEER — DATE

7-20-09
DATE

REGISTERED PROFESSIONAL ENGINEER — LISA McCUTCHEON — No. C70121 — Exp. 9/30/10 — CIVIL — STATE OF CALIFORNIA

The State of California or its officers or agents shall not be responsible for the accuracy or completeness of electronic copies of this plan sheet.

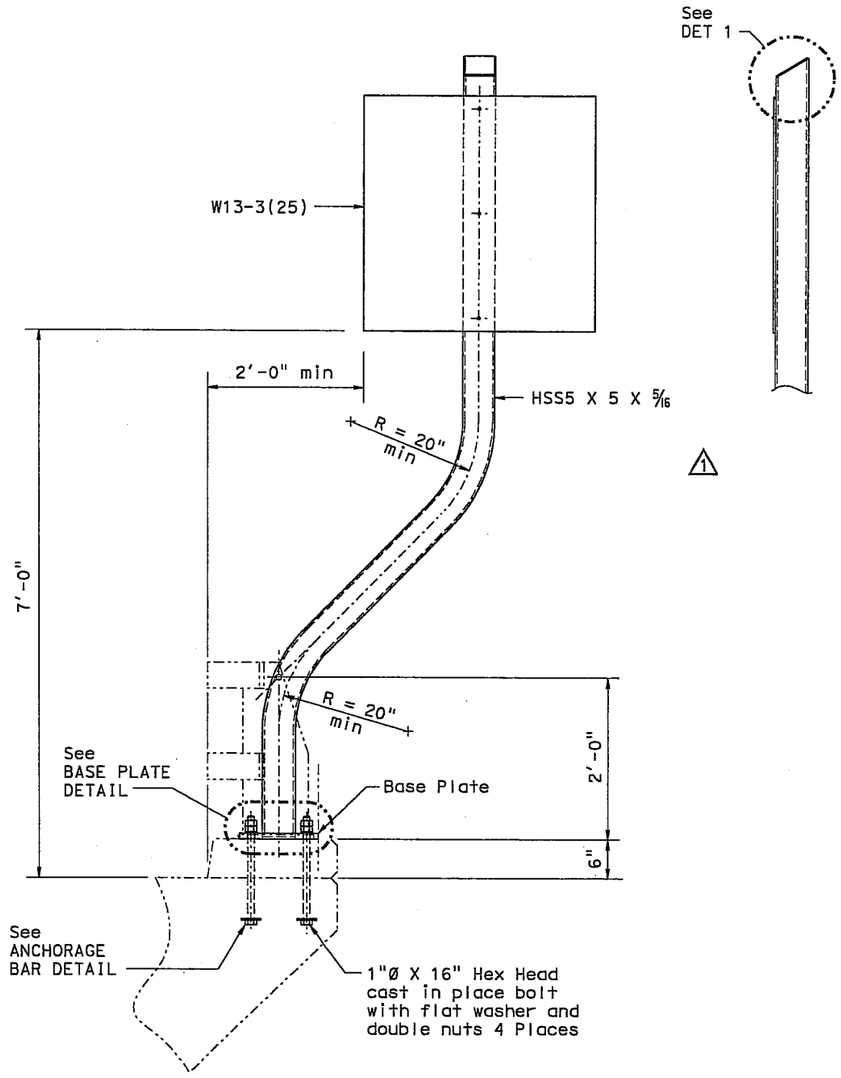

ELEVATION
PERMANENT SIGN 113

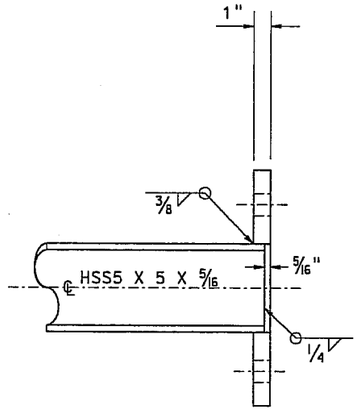

SECTION A-A

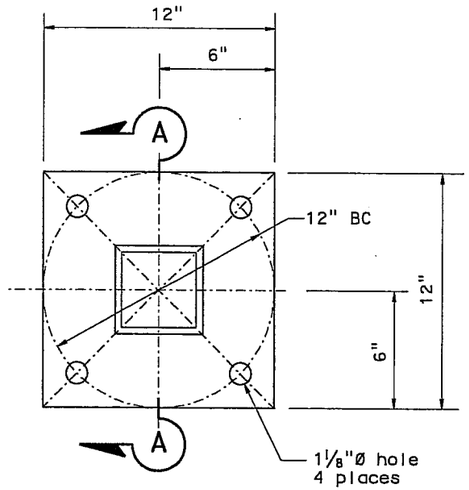

BASE PLATE

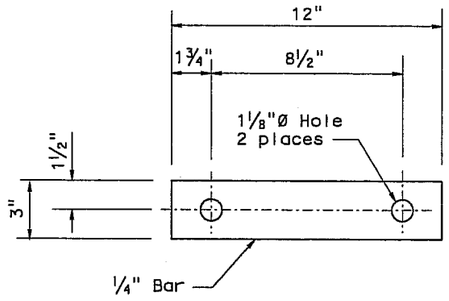

ANCHORAGE BAR

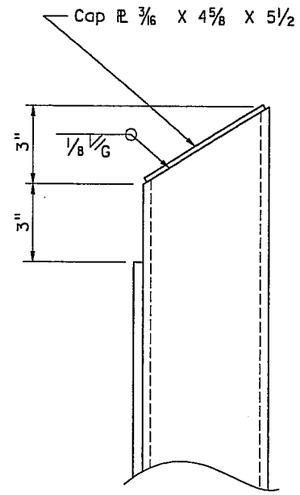

DETAIL 1

NOTES:

1. Unless otherwise shown all steel shall be galvanized after fabrication.
2. Contractor to provide anchor bolt layout and template before anchor bolts are placed.
3. Minimum fillet weld is 3/8" or thickness of thinner part unless noted.
4. See "ROAD PLANS" for sign location.
5. Refer to STD PLANS RS-2 for SIGN BACKING DETAILS.

NOTE:
THE CONTRACTOR SHALL VERIFY ALL CONTROLLING FIELD DIMENSIONS BEFORE ORDERING OR FABRICATING ANY MATERIAL.

REGISTERED PROFESSIONAL ENGINEER — LISA McCUTCHEON — No. C70121 — Exp. 9/30/10 — CIVIL — STATE OF CALIFORNIA

MARK	DATE	REVISION(S) DESCRIPTIONS	DES	CHK	DET
1	3-10-10	Revised Details and Added Detail 1	LM		AD

REGISTERED CIVIL ENGINEER: DATE: 3-10-10

CONTRACT CHANGE ORDER NO. ____
SHEET ___ OF ___

NO SCALE

S-3

BRANCH CHIEF

	BY	CHECKED
DESIGN	M O'LEARY	JOHN DATILES
DETAILS	A R DUDSAK	BOB GIORGIS
QUANTITIES	M O'LEARY	JOHN DATILES

STATE OF CALIFORNIA
DEPARTMENT OF TRANSPORTATION

DIVISION OF ENGINEERING SERVICES
STRUCTURE DESIGN
SPECIAL DESIGNS BRANCH

BRIDGE NO. 34-0157L
POST MILE X

PRESIDIO ROADWAY SIGN
RUCKMAN AVE UC ROADWAY SIGN

STRUCTURES DESIGN SPECIAL DESIGN SHEET (ENGLISH) (REV. 10-25-05)

ORIGINAL SCALE IN INCHES FOR REDUCED PLANS 0 1 2 3

CU 04
EA 163731

DISREGARD PRINTS BEARING EARLIER REVISION DATES →

REVISION DATES: 5/4/09 | 5-18-09 | 3-10-10

SHEET 3 OF 4

DIST	COUNTY	ROUTE	POST MILES TOTAL PROJECT	SHEET No	TOTAL SHEETS
04	SF	101,1	9.2/9.8, 6.8/7.1	157R1	567

REGISTERED CIVIL ENGINEER — DATE

7-20-09
DATE

REGISTERED PROFESSIONAL ENGINEER — LISA McCLUTCHEON — No. C70121 — Exp. 9/30/10 — CIVIL — STATE OF CALIFORNIA

The State of California or its officers or agents shall not be responsible for the accuracy or completeness of electronic copies of this plan sheet.

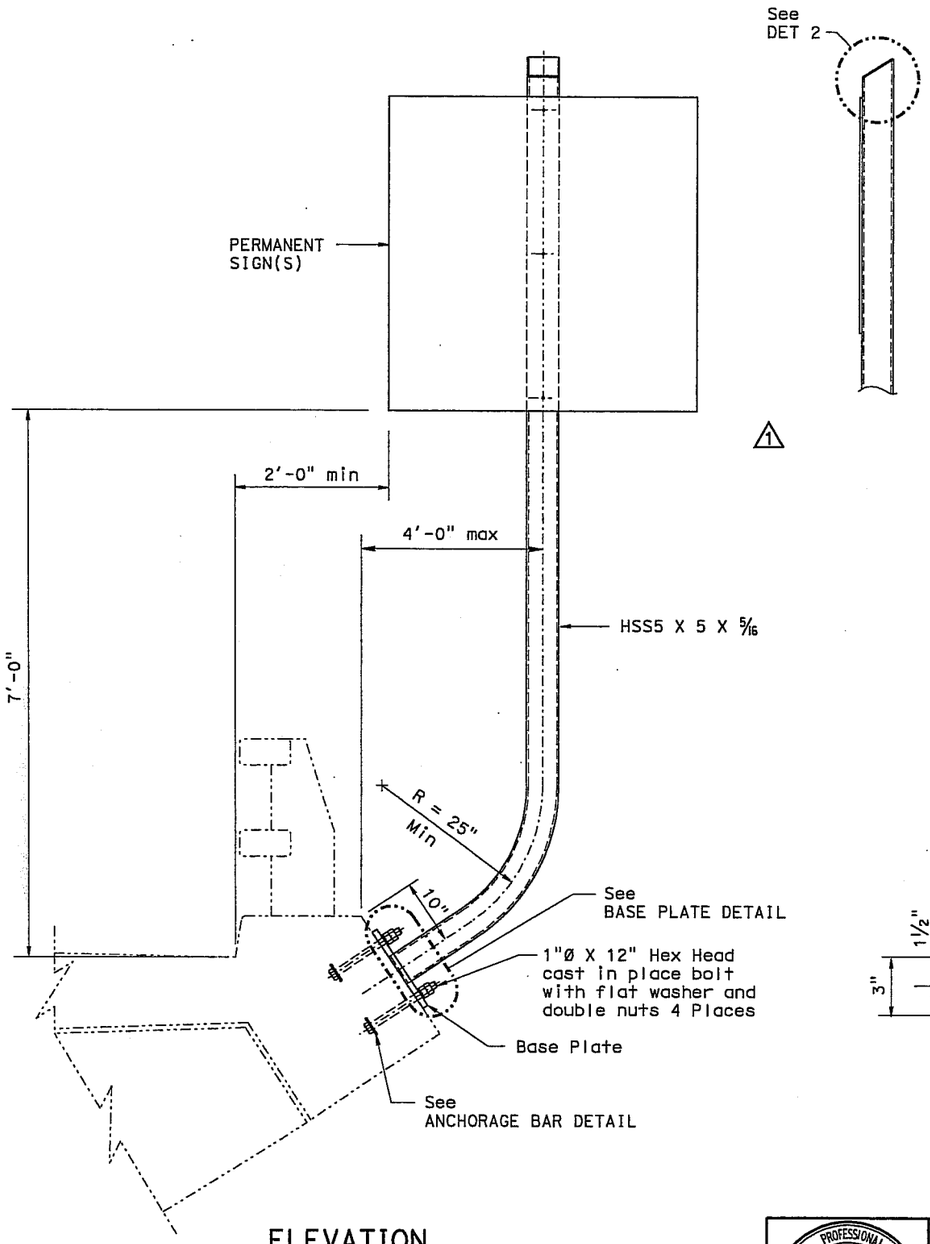

ELEVATION
PERMANENT SIGN 114, 115 & 116

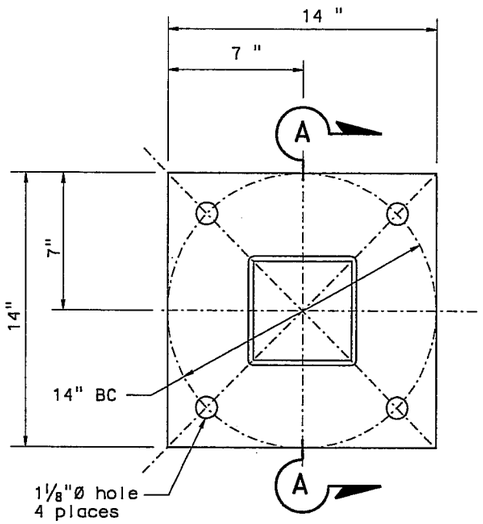

BASE PLATE

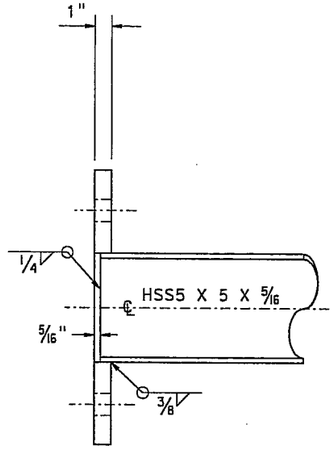

SECTION A-A

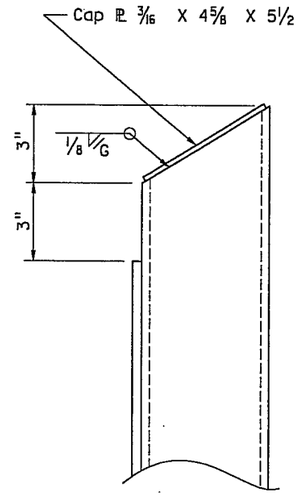

1

DETAIL 2

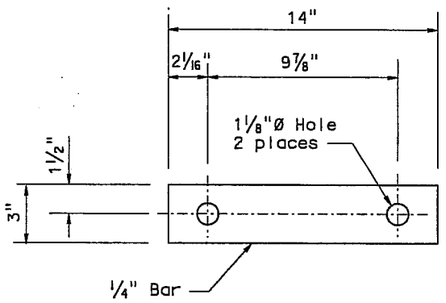

ANCHORAGE BAR

NOTES:

1. Unless otherwise shown all steel shall be galvanized after fabrication then painted International Orange.
2. Contractor to provide anchor bolt layout and template before anchor bolts are placed.
3. Minimum fillet weld is 3/8" or thickness of thinner part unless noted.
4. See "ROAD PLANS" for sign location.
5. Refer to STD PLANS RS-2 for SIGN BACKING DETAILS.

NOTE:
THE CONTRACTOR SHALL VERIFY ALL CONTROLLING FIELD DIMENSIONS BEFORE ORDERING OR FABRICATING ANY MATERIAL.

REGISTERED PROFESSIONAL ENGINEER — LISA McCLUTCHEON — No. C70121 — Exp. 9/30/10 — CIVIL — STATE OF CALIFORNIA

MARK	DATE	REVISION(S) DESCRIPTIONS	DES	CHK	DET
1	3-10-10	Revised Details and Added Detail 2	LM		AD

REGISTERED CIVIL ENGINEER: DATE: 3-10-10

CONTRACT CHANGE ORDER NO. ____
SHEET ___ OF ___

NO SCALE

S-4

Jeffrey B Woody
BRANCH CHIEF

	BY	CHECKED
DESIGN	M O'LEARY	JOHN DATILES
DETAILS	A R DUDSAK	BOB GIORGIS
QUANTITIES	M O'LEARY	JOHN DATILES

STATE OF CALIFORNIA
DEPARTMENT OF TRANSPORTATION

DIVISION OF ENGINEERING SERVICES
STRUCTURE DESIGN
SPECIAL DESIGNS BRANCH

CU 04
EA 163731

BRIDGE NO. 34-0157L
POST MILE X

PRESIDIO ROADWAY SIGN
VIADUCT / CONNECTOR

STRUCTURES DESIGN SPECIAL DESIGN SHEET (ENGLISH) (REV. 10-25-05)

ORIGINAL SCALE IN INCHES FOR REDUCED PLANS 0 1 2 3

DISREGARD PRINTS BEARING EARLIER REVISION DATES →

REVISION DATES										SHEET	OF
6/24/09	6-18-09	3-10-10								4	4

DIST	COUNTY	ROUTE	POST MILES TOTAL PROJECT	SHEET No	TOTAL SHEETS
04	SF	1,101	9.2/9.8,6.8/7.1	98R1	567

REGISTERED CIVIL ENGINEER DATE

DATE

REGISTERED PROFESSIONAL ENGINEER LISA McCLUTCHEON No. C70121 Exp. 9/30/10 CIVIL STATE OF CALIFORNIA

The State of California or its officers or agents shall not be responsible for the accuracy or completeness of electronic copies of this plan sheet.

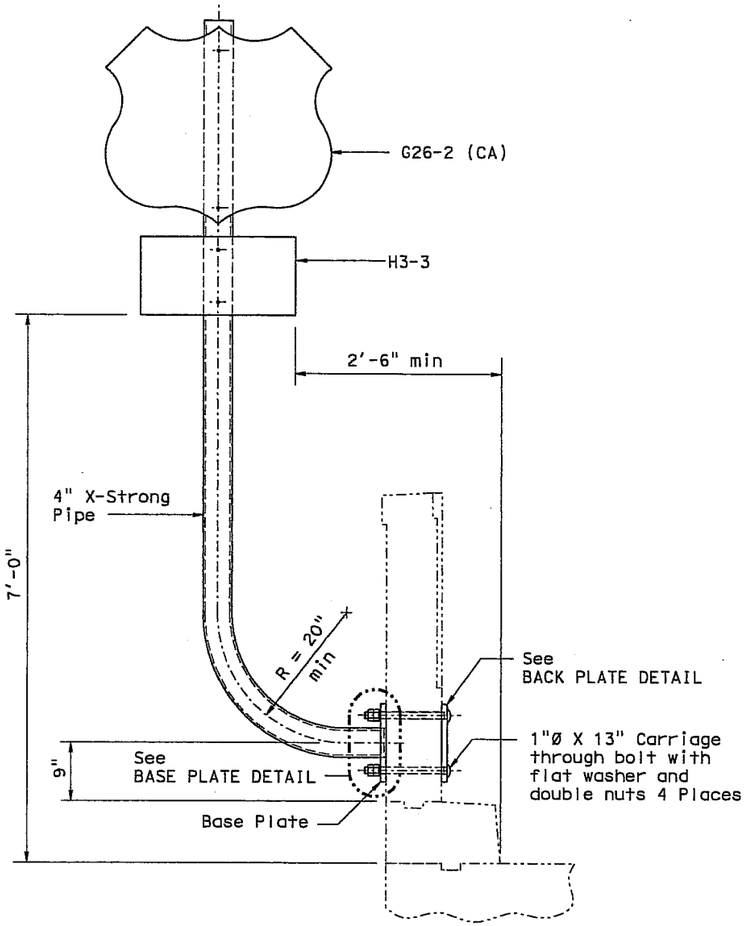

ELEVATION

STAGE CONSTRUCTION SIGN 4 ⚠1

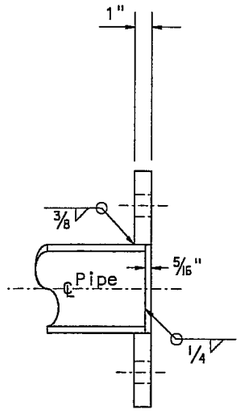

SECTION A-A

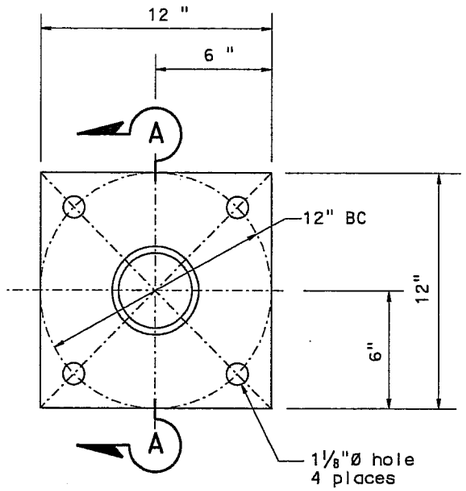

BASE PLATE

BACK PLATE

MARK	DATE	REVISION(S) DESCRIPTIONS	DES	CHK	DET
1	3-11-10	Revised sign type	LM		AD

REGISTERED CIVIL ENGINEER: DATE: 3-10-10

CONTRACT CHANGE ORDER NO. ____
SHEET ___ OF ___

NOTES:

1. Unless otherwise shown all steel shall be galvanized after fabrication.
2. Contractor to provide anchor bolt layout before anchor bolts are placed.
3. Minimum fillet weld is ⅜" or thickness of thinner part unless noted.
4. See "ROAD PLANS" for sign location.
5. Refer to STD PLANS RS-2 for SIGN BACKING DETAILS.

NOTE:
THE CONTRACTOR SHALL VERIFY ALL CONTROLLING FIELD DIMENSIONS BEFORE ORDERING OR FABRICATING ANY MATERIAL.

NO SCALE

CS-9

BRANCH CHIEF

DESIGN	BY A GUTIERREZ	CHECKED M LICHA
DETAILS	BY A R DUDSAK	CHECKED BOB GIORGIS
QUANTITIES	BY A GUTIERREZ	CHECKED M LICHA

STATE OF CALIFORNIA
DEPARTMENT OF TRANSPORTATION

DIVISION OF ENGINEERING SERVICES
STRUCTURE DESIGN
SPECIAL DESIGNS BRANCH

CU 04
EA 163731

BRIDGE NO. 34-0157L
POST MILE X

PRESIDIO ROADWAY SIGN
EXISTING VIADUCT

STRUCTURES DESIGN SPECIAL DESIGN SHEET (ENGLISH) (REV. 10-25-05)

ORIGINAL SCALE IN INCHES FOR REDUCED PLANS 0 1 2 3

DISREGARD PRINTS BEARING EARLIER REVISION DATES → 6/2/09 | 5-15-09 | 2-15-10

SHEET 1 OF 4

DGN: 5115 p:\pspec\dgn\bg_pri\2009pd\04_163731\04_163731_cs9.sgn

DIST	COUNTY	ROUTE	POST MILES TOTAL PROJECT	SHEET No	TOTAL SHEETS
04	SF	1,101	9.2/9.8,6.8/7.1	99R1	567

REGISTERED CIVIL ENGINEER — DATE

DATE

REGISTERED PROFESSIONAL ENGINEER — LISA McCUTCHEON — No. C70121 — Exp. 9/30/10 — CIVIL — STATE OF CALIFORNIA

The State of California or its officers or agents shall not be responsible for the accuracy or completeness of electronic copies of this plan sheet.

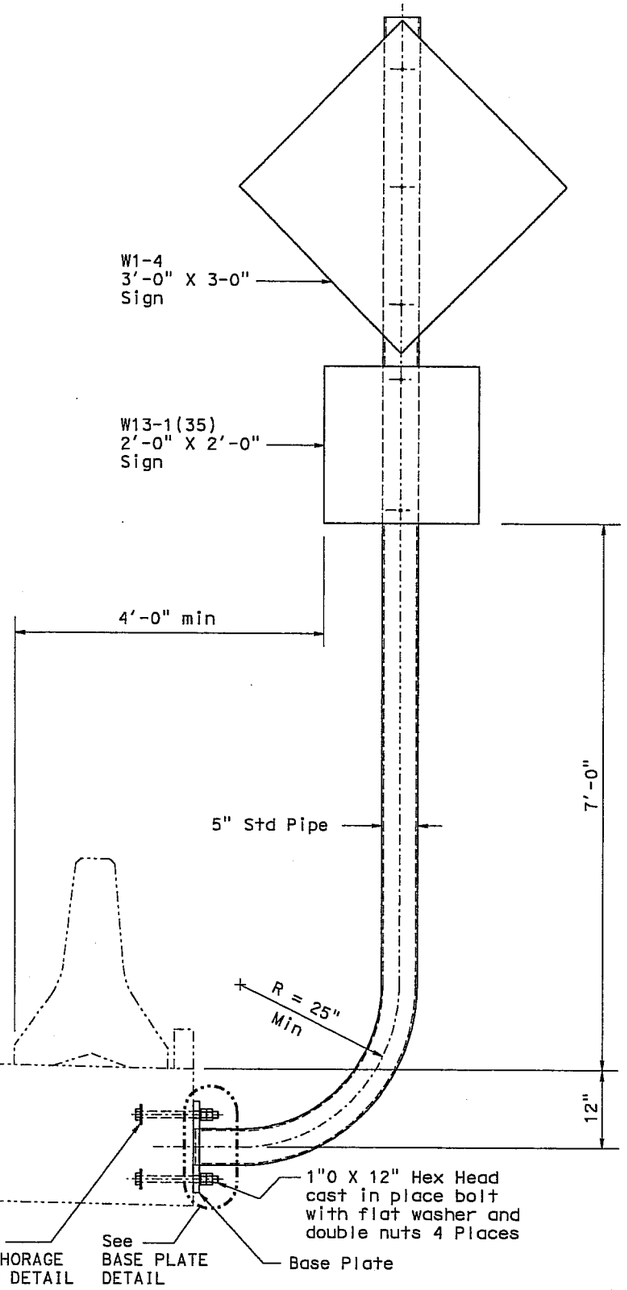

ELEVATION

STAGE CONSTRUCTION SIGN 4 & 17 ⚠1

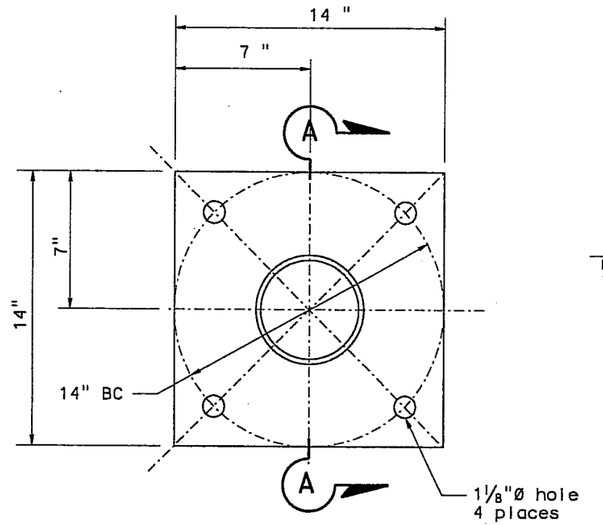

BASE PLATE

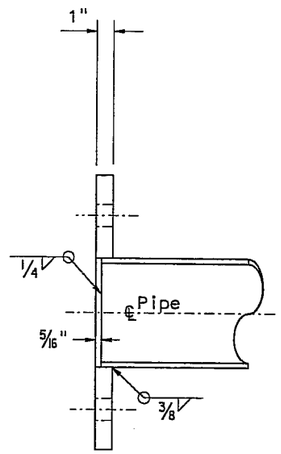

SECTION A-A

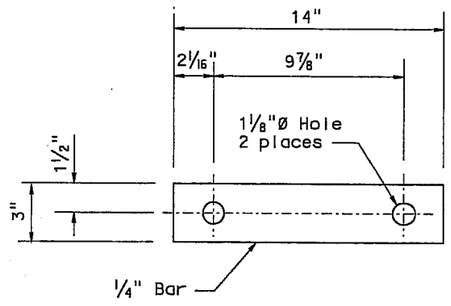

ANCHORAGE BAR

MARK	DATE	REVISION(S) DESCRIPTIONS	DES	CHK	DET
⚠1	3-11-10	Revised sign type	LM		AD

REGISTERED CIVIL ENGINEER: — DATE: 3-10-10

REGISTERED PROFESSIONAL ENGINEER — LISA McCUTCHEON — No. C70121 — Exp. 9/30/10 — CIVIL — STATE OF CALIFORNIA

CONTRACT CHANGE ORDER NO. ____
SHEET ___ OF ___

NOTES:

1. Unless otherwise shown all steel shall be galvanized after fabrication.
2. Contractor to provide anchor bolt layout and template before anchor bolts are placed.
3. Minimum fillet weld is ⅜" or thickness of thinner part unless noted.
4. See "ROAD PLANS" for sign location.
5. Refer to STD PLANS RS-2 for SIGN BACKING DETAILS.

NOTE:
THE CONTRACTOR SHALL VERIFY ALL CONTROLLING FIELD DIMENSIONS BEFORE ORDERING OR FABRICATING ANY MATERIAL.

NO SCALE

CS-10

Jeffrey B Woody
BRANCH CHIEF

DESIGN	BY A GUTIERREZ	CHECKED M LICHA
DETAILS	BY A R DUDSAK	CHECKED BOB GIORGIS
QUANTITIES	BY A GUTIERREZ	CHECKED M LICHA

STATE OF CALIFORNIA
DEPARTMENT OF TRANSPORTATION

DIVISION OF ENGINEERING SERVICES
STRUCTURE DESIGN
SPECIAL DESIGNS BRANCH

BRIDGE NO. 34-0157L
POST MILE X

PRESIDIO ROADWAY SIGN
RUCKMAN AVE UC ROADWAY SIGN

STRUCTURES DESIGN SPECIAL DESIGN SHEET (ENGLISH) (REV. 10-25-05)

ORIGINAL SCALE IN INCHES FOR REDUCED PLANS 0 1 2 3

CU 04
EA 163731

DISREGARD PRINTS BEARING EARLIER REVISION DATES →

REVISION DATES: 5-4-09 | 5-16-09 | 2-15-10

SHEET 2 OF 4

DIST	COUNTY	ROUTE	POST MILES TOTAL PROJECT	SHEET No	TOTAL SHEETS
04	SF	101,1	9.2/9.8, 6.8/7.1	215A1	567

REGISTERED CIVIL ENGINEER DATE

PLANS APPROVAL DATE

REGISTERED PROFESSIONAL ENGINEER LISA McCUTCHEON No. C70121 Exp. 9/30/10 CIVIL STATE OF CALIFORNIA

The State of California or its officers or agents shall not be responsible for the accuracy or completeness of electronic copies of this plan sheet.

To get to the Caltrans web site, go to: http://www.dot.ca.gov

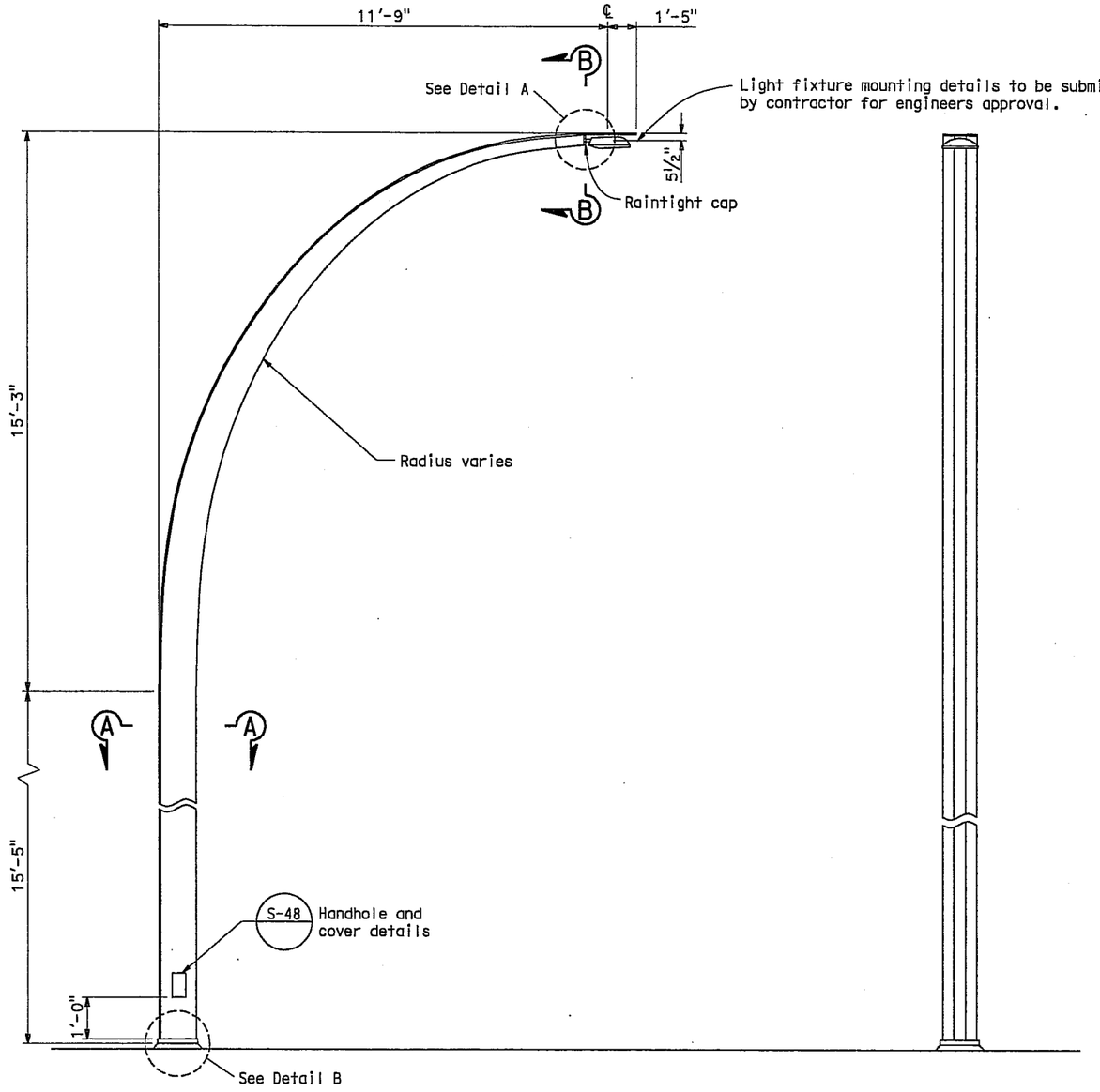

PROFILE VIEW

FRONT VIEW

NOTE:
THE CONTRACTOR SHALL VERIFY ALL CONTROLLING FIELD DIMENSIONS BEFORE ORDERING OR FABRICATING ANY MATERIAL.

DESIGN NOTES:

SPECIFICATIONS

Design : AASHTO Standard Specifications for Structural Supports for Highway Signs, Luminaires and Traffic Signals dated 2001.

LOADING

Wind Loadings : 100 mph

UNIT STRESSES

Structural Steel : fy = 36,000 psi unless otherwise noted.
fy = 48,000 psi tapered steel structure.

NOTES:

1. All steel shall be galvanized after fabrication, then painted International Orange.
2. During pole erection the post shall be raked as necessary with the use of leveling nuts to provide a plumb pole axis.
3. The foundation shall be treated as level ground condition if the slope inclination is flatter than 4H:1V.
4. For light fixture see "ELECTRICAL PLANS".
5. Light fixture weight not to exceed 30 lbs.
6. For anchorage details, see sheets SD 5.2, SD 13 and E-53.
7. See sheet "CUSTOM LIGHT FIXTURE DETAILS 2" for "SECTION A-A", SECTION B-B", "DETAIL A" and "DETAIL B".
8. Light fixture to be International Orange in color.

ADDITIONAL SHEET

CONTRACT CHANGE ORDER NO. ____
SHEET ___ OF ___

NO SCALE

BRANCH CHIEF Jeffrey B Woody

	BY	CHECKED
DESIGN	A GUTIERREZ	M LICHA
DETAILS	D W JUSTICE Jr	A GUTIERREZ
QUANTITIES	M LICHA	A GUTIERREZ

STATE OF CALIFORNIA
DEPARTMENT OF TRANSPORTATION

DIVISION OF ENGINEERING SERVICES
DESIGN AND TECHNICAL SERVICES
SPECIAL DESIGNS BRANCH **A**

BRIDGE NO. Various
POST MILE

DOYLE DRIVE REPLACEMENT PROJECT
CUSTOM LIGHT FIXTURE DETAILS 1

E-52

(ENGLISH) SPECIAL DESIGNS BRANCH BORDER SHEET (REV. 7-1-09)

ORIGINAL SCALE IN INCHES FOR REDUCED PLANS 0 1 2 3

CU 04
EA 163733

DISREGARD PRINTS BEARING EARLIER REVISION DATES →

REVISION DATES										SHEET	OF
12-14-09	1-28-10	2-1-10	3-3-10								

DIST	COUNTY	ROUTE	POST MILES TOTAL PROJECT	SHEET NO	TOTAL SHEETS
04	SF	101,1	9.2/9.8, 6.8/7.1	215A2	567

REGISTERED CIVIL ENGINEER DATE

PLANS APPROVAL DATE

REGISTERED PROFESSIONAL ENGINEER LISA McCLUTCHEON No. C70121 Exp. 9/30/10 CIVIL STATE OF CALIFORNIA

The State of California or its officers or agents shall not be responsible for the accuracy or completeness of electronic copies of this plan sheet.

To get to the Caltrans web site, go to: http://www.dot.ca.gov

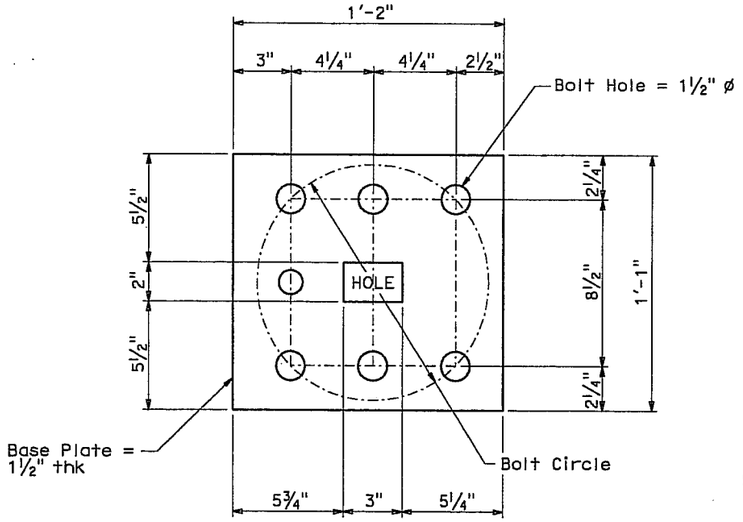

BASE PLATE

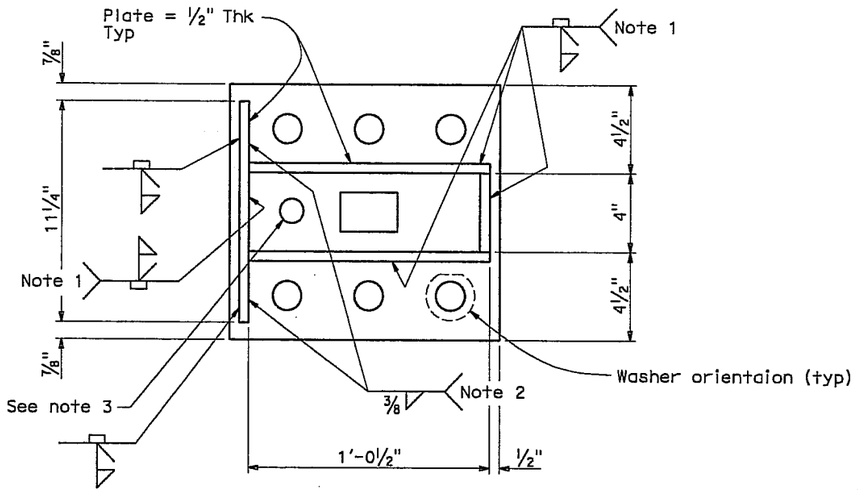

BASE PLATE LAYOUT

Notes:

1. Attach backing plate to base plate with a continuous fillet weld on the inside of weldment. Grind smooth the transition from reinforcing fillet to pole, use light grinding. See Detail C.
2. Remove backing, and grind smooth prior to weld. Weld to have a ½" return.
3. 1¼" ø galvanizing drain hole, ½" clear of backing ring. Chased edges in plate.
4. For location of "SECTION A-A" and "SECTION B-B" see "CUSTOM LIGHT FIXTURE DETAILS 1" sheet.

ADDITIONAL SHEET

CONTRACT CHANGE ORDER NO. ____
SHEET ___ OF ___

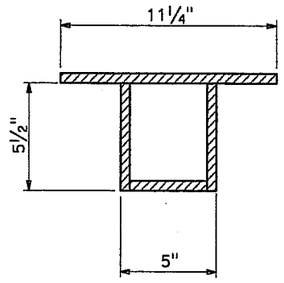

SECTION B-B

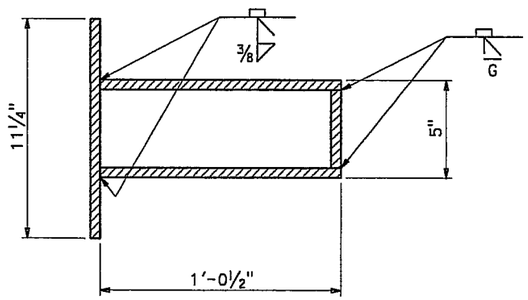

SECTION A-A

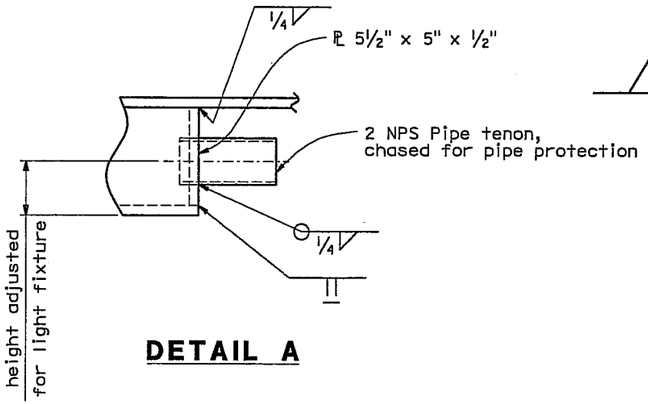

DETAIL A

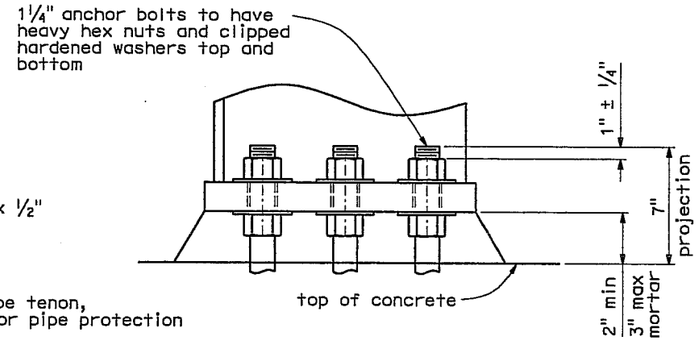

DETAIL B

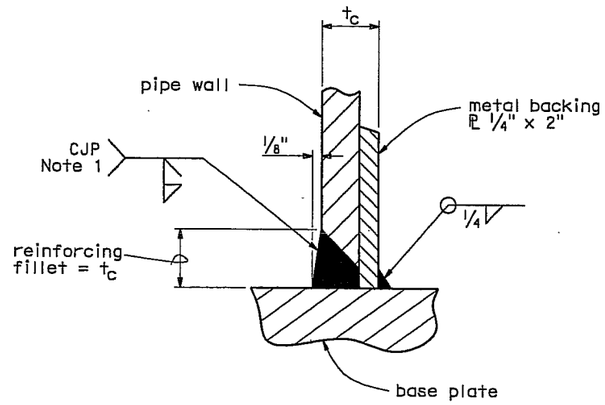

DETAIL C

NOTE:
THE CONTRACTOR SHALL VERIFY ALL CONTROLLING FIELD DIMENSIONS BEFORE ORDERING OR FABRICATING ANY MATERIAL.

NO SCALE

BRANCH CHIEF Jeffrey S Woody	DESIGN	BY A GUTIERREZ	CHECKED M LICHA
	DETAILS	BY D W JUSTICE Jr	CHECKED A GUTIERREZ
	QUANTITIES	BY M LICHA	CHECKED A GUTIERREZ

STATE OF CALIFORNIA
DEPARTMENT OF TRANSPORTATION

DIVISION OF ENGINEERING SERVICES
DESIGN AND TECHNICAL SERVICES
SPECIAL DESIGNS BRANCH **A**

BRIDGE NO. Various
POST MILE

DOYLE DRIVE REPLACEMENT PROJECT
CUSTOM LIGHT FIXTURE DETAILS 2

E-53

(ENGLISH) SPECIAL DESIGNS BRANCH BORDER SHEET (REV. 7-1-09)

ORIGINAL SCALE IN INCHES FOR REDUCED PLANS 0 1 2 3

CU 04
EA 163733

DISREGARD PRINTS BEARING EARLIER REVISION DATES →

REVISION DATES: 12-14-09 | 1-20-10 | 2-5-10 | 2-16-10 | 3-3-10

SHEET OF

DIST	COUNTY	ROUTE	POST MILES TOTAL PROJECT	SHEET No	TOTAL SHEETS
04	SF	1,101	9.2/9.8, 6.8/7.1	215A3	56

Robert B. Giorgis 6-15-09
REGISTERED CIVIL ENGINEER DATE

PLANS APPROVAL DATE

The State of California or its officers or agents shall not be responsible for the accuracy or completeness of electronic copies of this plan sheet.

REGISTERED PROFESSIONAL ENGINEER ROBERT B. GIORGIS JR. No. C60705 Exp. 12/31/10 CIVIL STATE OF CALIFORNIA

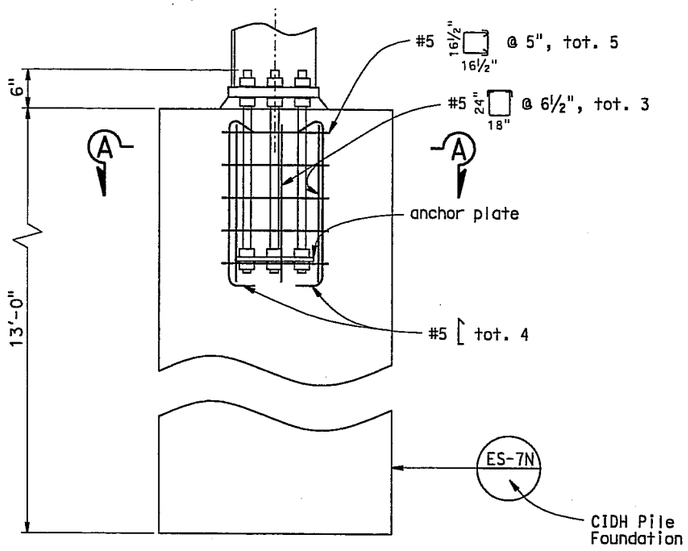

PROFILE VIEW
NO SCALE

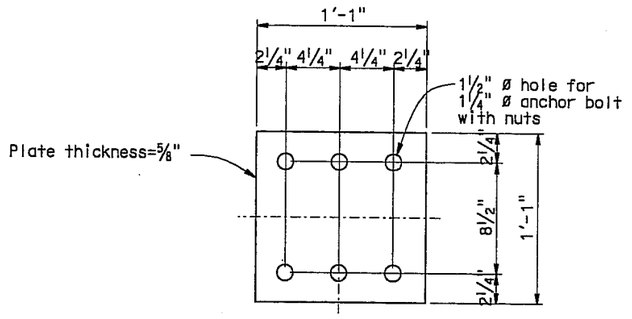

ANCHOR PLATE DETAIL
NO SCALE

Notes:

1. After plumbing standard, place nonshrink grout pad all around bolts. Finish sides with a 45° slope.
2. Electrolier anchor bolts shall be held in position for pouring by means of anchor plates and suitable templates. Deviation from true position, vertical and height, shall not exceed 1/16".
3. Rebar shall have 2" concrete cover minimum unless noted.
4. f'_c = 5,000 psi.
5. Anchor bolts shall be 1¼" ø x 31" all-threaded rod clamped to a ⅝" thick anchor plate with opposing nuts. Anchor bolts shall be ASTM F1554, Grade 55.
6. Top 7" of anchor bolts shall be galvanized.
7. See "ROADWAY PLANS" for base plate details.

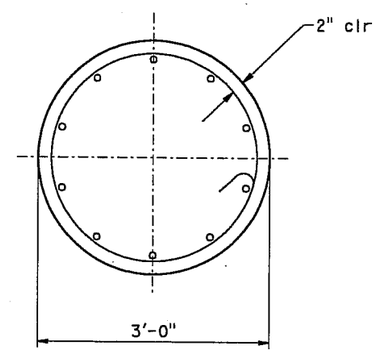

SECTION A-A
NO SCALE

ADDITIONAL SHEET

CONTRACT CHANGE ORDER NO. ____
SHEET ____ OF ____

NOTE:
THE CONTRACTOR SHALL VERIFY ALL CONTROLLING FIELD DIMENSIONS BEFORE ORDERING OR FABRICATING ANY MATERIAL.

PEDESTAL FOR CUSTOM LIGHT FIXTURE
E-54

Jeffrey B Woody
BRANCH CHIEF

	BY	CHECKED
DESIGN	J DATILES	R GIORGIS
DETAILS	D W JUSTICE Jr	J DATILES
QUANTITIES	J DATILES	R GIORGIS

STATE OF CALIFORNIA
DEPARTMENT OF TRANSPORTATION

DIVISION OF ENGINEERING SERVICES
STRUCTURE DESIGN
SPECIAL DESIGNS BRANCH

BRIDGE NO. 34-0157L
POST MILE X

PRESIDIO VIADUCT - LEFT
PEDESTAL DETAILS

STRUCTURES DESIGN SPECIAL DESIGN SHEET (ENGLISH) (REV. 10-25-05)

ORIGINAL SCALE IN INCHES FOR REDUCED PLANS 0 1 2 3

CU 04
EA 163731

DISREGARD PRINTS BEARING EARLIER REVISION DATES

REVISION DATES 12-14-09 1-12-09 1-20-10 2-8-10

SHEET OF

DIST	COUNTY	ROUTE	POST MILES TOTAL PROJECT	SHEET No	TOTAL SHEETS
04	SF	101,1	9.2/9.8, 6.8/7.1	514R1	56

Robert B. Giorgis Jr. 6-15-09
REGISTERED CIVIL ENGINEER DATE

7-20-09
PLANS APPROVAL DATE

The State of California or its officers or agents shall not be responsible for the accuracy or completeness of electronic copies of this plan sheet.

REGISTERED PROFESSIONAL ENGINEER ROBERT B. GIORGIS JR. No. C60705 Exp. 12/31/10 CIVIL STATE OF CALIFORNIA

1

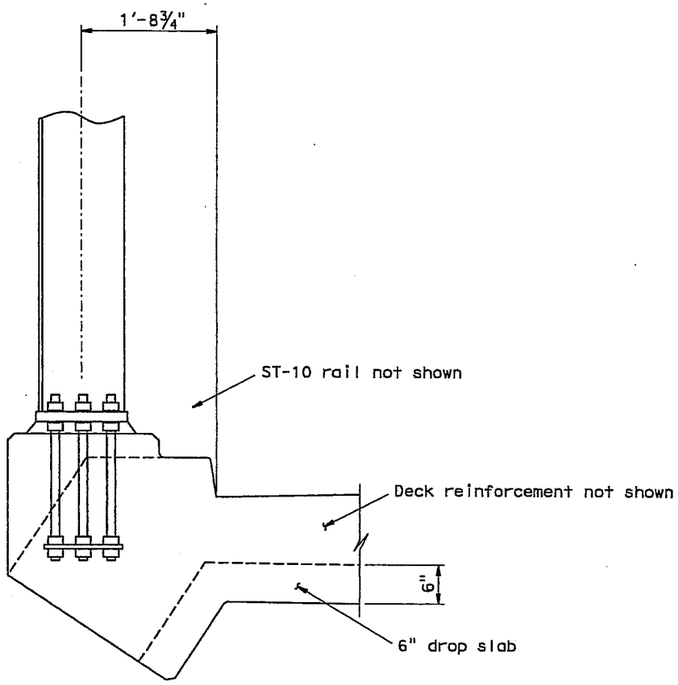

PEDESTAL FOR CUSTOM LIGHT FIXTURE
N1-S101 CONNECTOR

NO SCALE

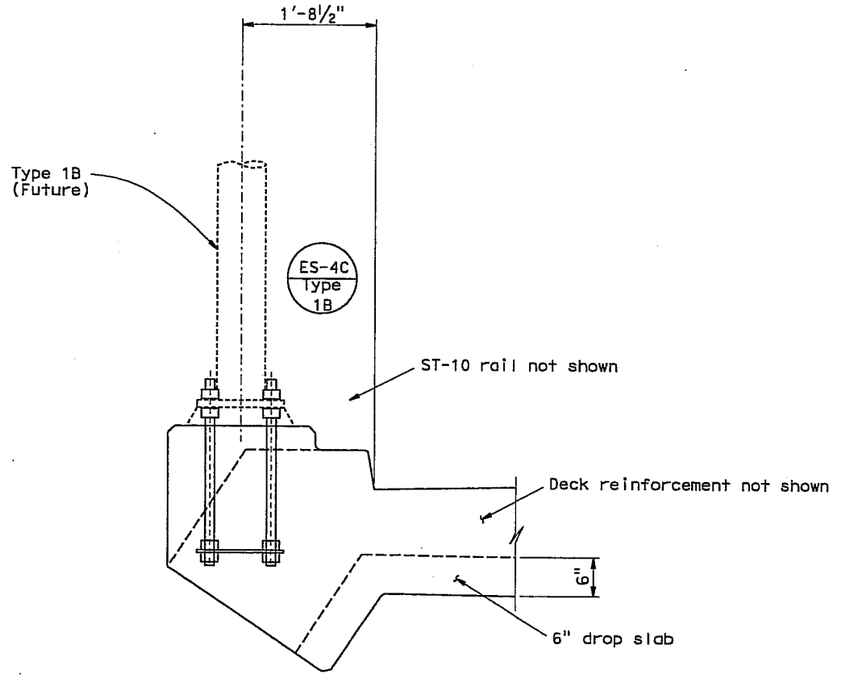

TYPE 1B PEDESTAL
(FOR FUTURE STANDARD)
N1-S101 CONNECTOR

NO SCALE

Notes:

1. Rebar not shown for clarity - See Sheet SD 5.2.
2. For ST-10 barrier details see "CONNECTOR PLANS".
3. For custom light fixture locations see "Road Plans".

REGISTERED PROFESSIONAL ENGINEER ROBERT B. GIORGIS JR. No. C60705 Exp. 12/31/10 CIVIL STATE OF CALIFORNIA

MARK	DATE	REVISION(S) DESCRIPTIONS	DES	CHK	DET
1	3-10-10	Revised Entire sheet	RB		DJ

REGISTERED CIVIL ENGINEER: DATE: 3-10-10

CONTRACT CHANGE ORDER NO. ____
SHEET ___ OF ___

NOTE:
THE CONTRACTOR SHALL VERIFY ALL CONTROLLING FIELD DIMENSIONS BEFORE ORDERING OR FABRICATING ANY MATERIAL.

1 REVISED PER ADDENDUM No. 1 DATED AUGUST 13, 2009

PEDESTAL FOR CUSTOM LIGHT FIXTURE / TYPE 1B
SD 5.1

Jeffrey B Woody
BRANCH CHIEF

	BY	CHECKED
DESIGN	M O'LEARY	JOHN DATILES
DETAILS	T. ZOLNIKOVA	M O'LEARY
QUANTITIES	M O'LEARY	JOHN DATILES

STATE OF CALIFORNIA
DEPARTMENT OF TRANSPORTATION

DIVISION OF ENGINEERING SERVICES
STRUCTURE DESIGN
SPECIAL DESIGNS BRANCH

BRIDGE NO. 34-0160G
POST MILE X

N1 - S101 CONNECTOR
PEDESTAL DETAILS NO. 1

STRUCTURES DESIGN SPECIAL DESIGN SHEET (ENGLISH) (REV. 10-25-05)

ORIGINAL SCALE IN INCHES FOR REDUCED PLANS 0 1 2 3

CU 04
EA 163731

DISREGARD PRINTS BEARING EARLIER REVISION DATES →

REVISION DATES: 5/14/09 | 5-18-09 | 7-20-09 | 7-21-09 | 3-10-10

SHEET 1 OF 6