Dist	COUNTY	ROUTE	POST MILES TOTAL PROJECT	SHEET No.	TOTAL SHEETS
03	ED	50	53.4/56.3	1	28

STATE OF CALIFORNIA

DEPARTMENT OF TRANSPORTATION

PROJECT PLANS FOR CONSTRUCTION ON

STATE HIGHWAY

IN EL DORADO COUNTY
AT VARIOUS LOCATIONS
FROM 0.4 MILE WEST OF WRIGHTS LAKE ROAD
TO 0.1 MILE WEST OF FORNI TRACT ROAD

TO BE SUPPLEMENTED BY STANDARD PLANS DATED MAY 2006

INDEX OF PLANS

SHEET No.	DESCRIPTION
1	TITLE AND LOCATION MAP
2-19	DRAINAGE PROFILES, DETAILS, AND QUANTITIES
20-28	REVISED AND NEW STANDARD PLANS

THE STANDARD PLANS LIST APPLICABLE TO THIS CONTRACT IS INCLUDED IN THE NOTICE TO BIDDERS AND SPECIAL PROVISIONS BOOK.

LOCATIONS OF CONSTRUCTION

LOCATION (X)	COUNTY	ROUTE	POST MILE
1	ED	50	53.35
2	ED	50	53.44
3	ED	50	53.56
4	ED	50	53.63
5	ED	50	53.73
6	ED	50	53.80
7	ED	50	53.86
8	ED	50	53.98
9	ED	50	54.09
10	ED	50	54.12
11	ED	50	54.17
12	ED	50	54.23
13	ED	50	54.28
14	ED	50	54.41
15	ED	50	54.49
16	ED	50	54.57
17	ED	50	55.01
18	ED	50	55.74
19	ED	50	55.89
20	ED	50	56.06
21	ED	50	56.16
22	ED	50	56.26

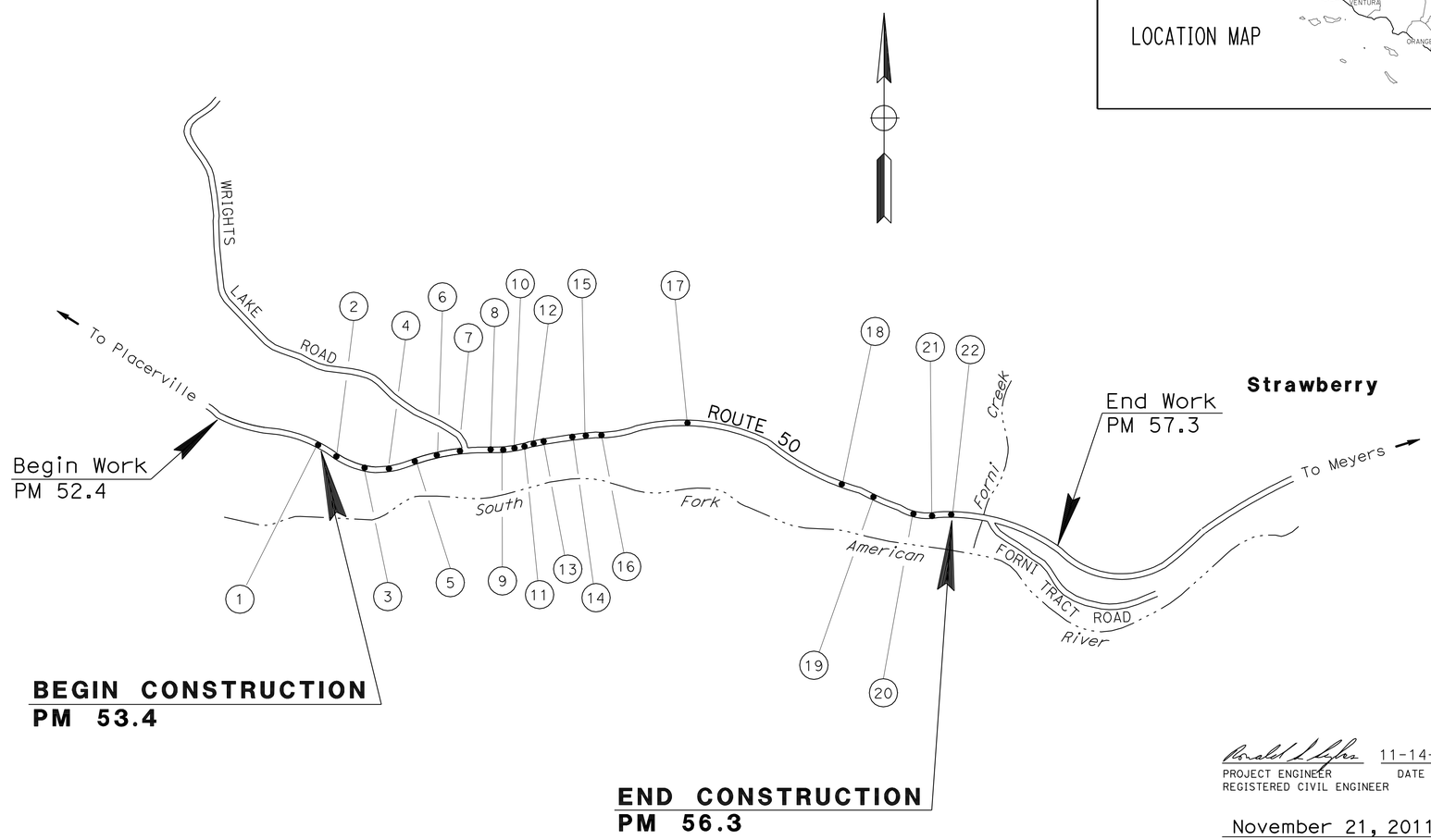

NO SCALE

PROJECT MANAGER: RONALD S. SYKES

DESIGN ENGINEER: NIK BEACH

THE CONTRACTOR SHALL POSSESS THE CLASS (OR CLASSES) OF LICENSE AS SPECIFIED IN THE "NOTICE TO BIDDERS."

PROJECT ENGINEER / REGISTERED CIVIL ENGINEER — DATE: 11-14-11

REGISTERED PROFESSIONAL ENGINEER — RONALD S. SYKES — No. C35526 — Exp. 9-30-13 — CIVIL — STATE OF CALIFORNIA

November 21, 2011
PLANS APPROVAL DATE

THE STATE OF CALIFORNIA OR ITS OFFICERS OR AGENTS SHALL NOT BE RESPONSIBLE FOR THE ACCURACY OR COMPLETENESS OF SCANNED COPIES OF THIS PLAN SHEET.

CONTRACT No.	03-3M8204
PROJECT ID	0300000602

LAST REVISION 08-15-11

DATE PLOTTED => 15-NOV-2011
TIME PLOTTED => 08:22

Dist	COUNTY	ROUTE	POST MILES TOTAL PROJECT	SHEET No.	TOTAL SHEETS
03	ED	50	53.4/56.3	2	28

REGISTERED CIVIL ENGINEER 11-14-11 DATE

11-21-11
PLANS APPROVAL DATE

REGISTERED PROFESSIONAL ENGINEER RONALD S. SYKES No. 35526 Exp 9-30-13 CIVIL STATE OF CALIFORNIA

THE STATE OF CALIFORNIA OR ITS OFFICERS OR AGENTS SHALL NOT BE RESPONSIBLE FOR THE ACCURACY OR COMPLETENESS OF SCANNED COPIES OF THIS PLAN SHEET.

NOTES:

1. FOR ACCURATE RIGHT OF WAY DATA, CONTACT RIGHT OF WAY ENGINEERING AT THE DISTRICT OFFICE.
2. EXISTING UTILITY FACILITIES HAVE NOT BEEN PLOTTED ON THESE PLANS.

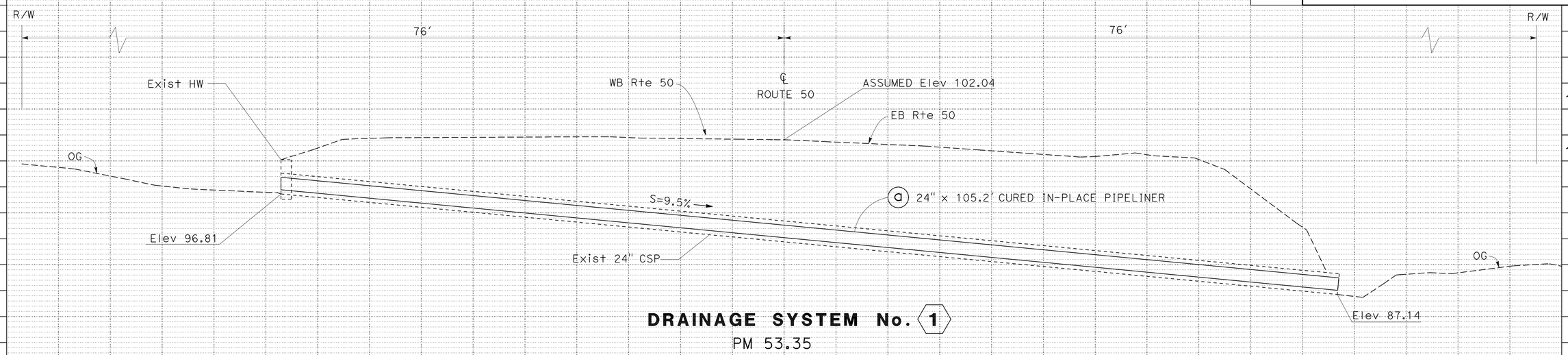

DRAINAGE SYSTEM No. 1
PM 53.35

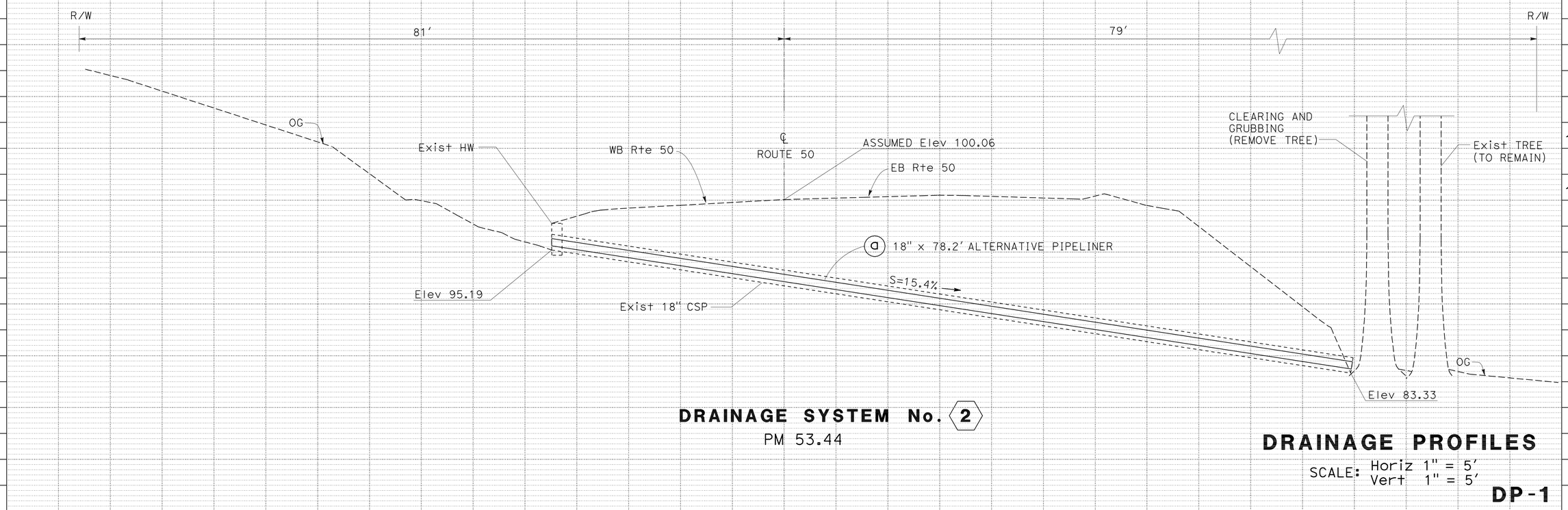

DRAINAGE SYSTEM No. 2
PM 53.44

DRAINAGE PROFILES

SCALE: Horiz 1" = 5'
Vert 1" = 5'

DP-1

STATE OF CALIFORNIA - DEPARTMENT OF TRANSPORTATION
Caltrans
MAINTENANCE

FUNCTIONAL SUPERVISOR: RONALD S. SYKES
CALCULATED-DESIGNED BY: NIK BEACH
CHECKED BY: RONALD S. SYKES
REVISED BY
DATE REVISED

LAST REVISION 08-15-11
DATE PLOTTED => 15-NOV-2011
TIME PLOTTED => 08:22

Dist	COUNTY	ROUTE	POST MILES TOTAL PROJECT	SHEET No.	TOTAL SHEETS
03	ED	50	53.4/56.3	3	28

REGISTERED CIVIL ENGINEER 11-14-11 DATE

11-21-11
PLANS APPROVAL DATE

REGISTERED PROFESSIONAL ENGINEER RONALD S. SYKES No. 35526 Exp 9-30-13 CIVIL STATE OF CALIFORNIA

THE STATE OF CALIFORNIA OR ITS OFFICERS OR AGENTS SHALL NOT BE RESPONSIBLE FOR THE ACCURACY OR COMPLETENESS OF SCANNED COPIES OF THIS PLAN SHEET.

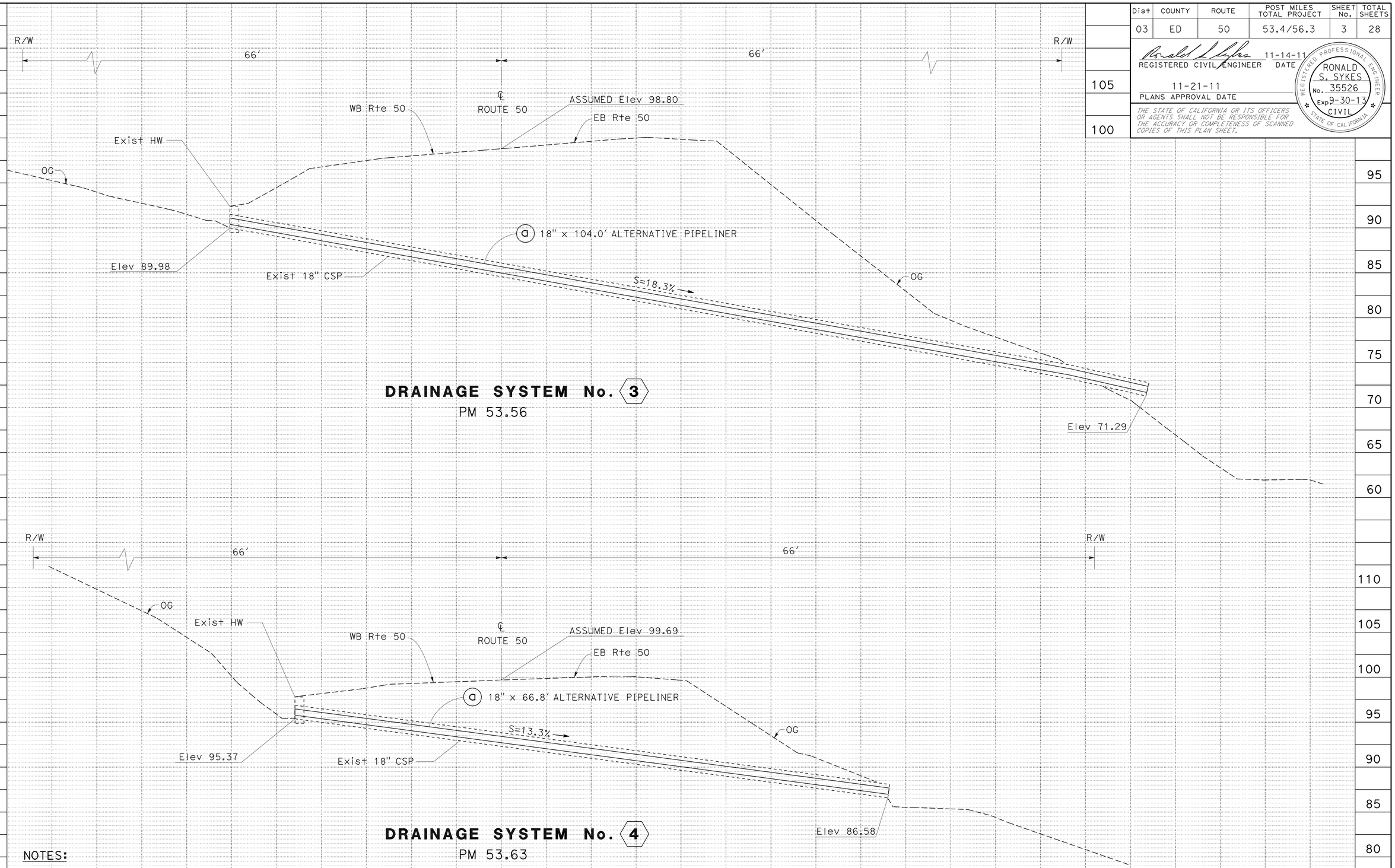

NOTES:

1. FOR ACCURATE RIGHT OF WAY DATA, CONTACT RIGHT OF WAY ENGINEERING AT THE DISTRICT OFFICE.
2. EXISTING UTILITY FACILITIES HAVE NOT BEEN PLOTTED ON THESE PLANS.

DRAINAGE PROFILES

SCALE: Horiz 1" = 5'
Vert 1" = 5'

DP-2

REVISED BY | DATE REVISED
NIK BEACH | RONALD S. SYKES
CALCULATED-DESIGNED BY | CHECKED BY
FUNCTIONAL SUPERVISOR | RONALD S. SYKES
STATE OF CALIFORNIA - DEPARTMENT OF TRANSPORTATION
Caltrans
MAINTENANCE

LAST REVISION | DATE PLOTTED => 15-NOV-2011 | TIME PLOTTED => 08:22
08-15-11

Dist	COUNTY	ROUTE	POST MILES TOTAL PROJECT	SHEET No.	TOTAL SHEETS
03	ED	50	53.4/56.3	4	28

REGISTERED CIVIL ENGINEER 11-14-11 DATE

11-21-11
PLANS APPROVAL DATE

REGISTERED PROFESSIONAL ENGINEER RONALD S. SYKES No. 35526 Exp 9-30-13 CIVIL STATE OF CALIFORNIA

THE STATE OF CALIFORNIA OR ITS OFFICERS OR AGENTS SHALL NOT BE RESPONSIBLE FOR THE ACCURACY OR COMPLETENESS OF SCANNED COPIES OF THIS PLAN SHEET.

NOTES:

1. FOR ACCURATE RIGHT OF WAY DATA, CONTACT RIGHT OF WAY ENGINEERING AT THE DISTRICT OFFICE.
2. EXISTING UTILITY FACILITIES HAVE NOT BEEN PLOTTED ON THESE PLANS.

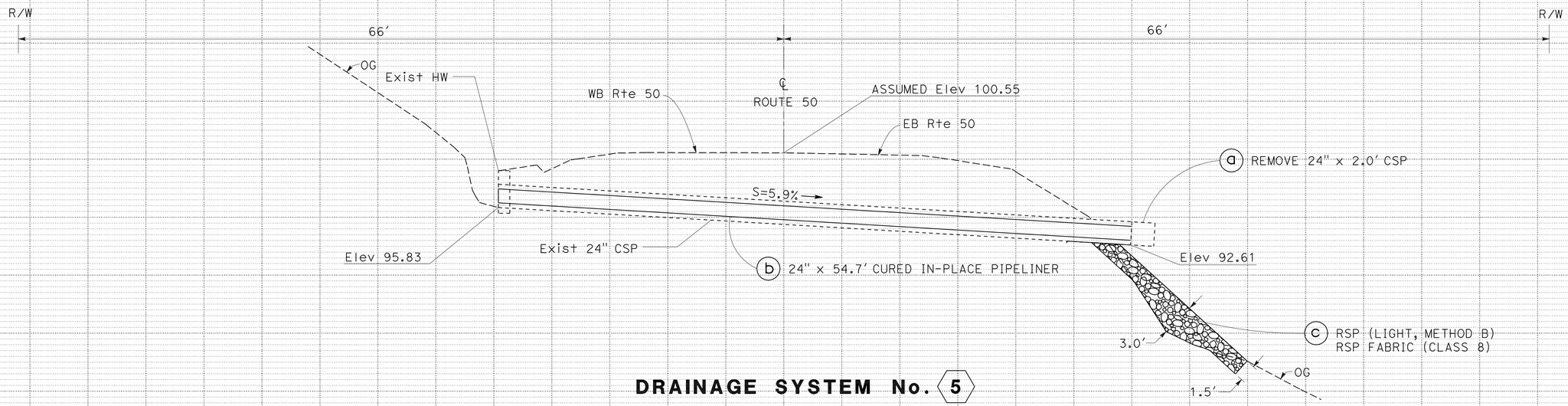

DRAINAGE SYSTEM No. 5
PM 53.73

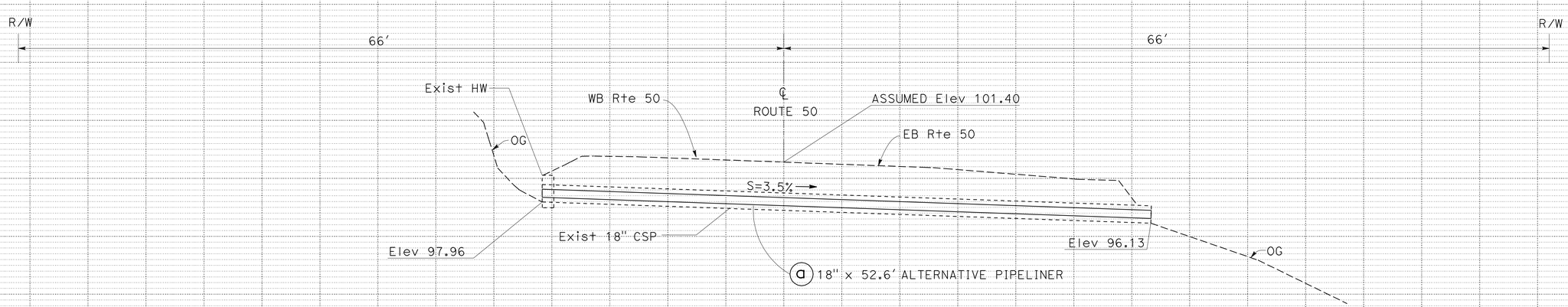

DRAINAGE SYSTEM No. 6
PM 53.80

DRAINAGE PROFILES

SCALE: Horiz 1" = 5′
Vert 1" = 5′

DP-3

STATE OF CALIFORNIA - DEPARTMENT OF TRANSPORTATION
Caltrans® MAINTENANCE

FUNCTIONAL SUPERVISOR: RONALD S. SYKES
CALCULATED-DESIGNED BY: NIK BEACH
CHECKED BY: RONALD S. SYKES
REVISED BY
DATE REVISED

LAST REVISION 08-15-11
DATE PLOTTED => 15-NOV-2011
TIME PLOTTED => 08:22

Dist	COUNTY	ROUTE	POST MILES TOTAL PROJECT	SHEET No.	TOTAL SHEETS
03	ED	50	53.4/56.3	5	28

REGISTERED CIVIL ENGINEER 11-14-11 DATE

11-21-11
PLANS APPROVAL DATE

REGISTERED PROFESSIONAL ENGINEER RONALD S. SYKES No. 35526 Exp 9-30-13 CIVIL STATE OF CALIFORNIA

THE STATE OF CALIFORNIA OR ITS OFFICERS OR AGENTS SHALL NOT BE RESPONSIBLE FOR THE ACCURACY OR COMPLETENESS OF SCANNED COPIES OF THIS PLAN SHEET.

NOTES:

1. FOR ACCURATE RIGHT OF WAY DATA, CONTACT RIGHT OF WAY ENGINEERING AT THE DISTRICT OFFICE.
2. EXISTING UTILITY FACILITIES HAVE NOT BEEN PLOTTED ON THESE PLANS.

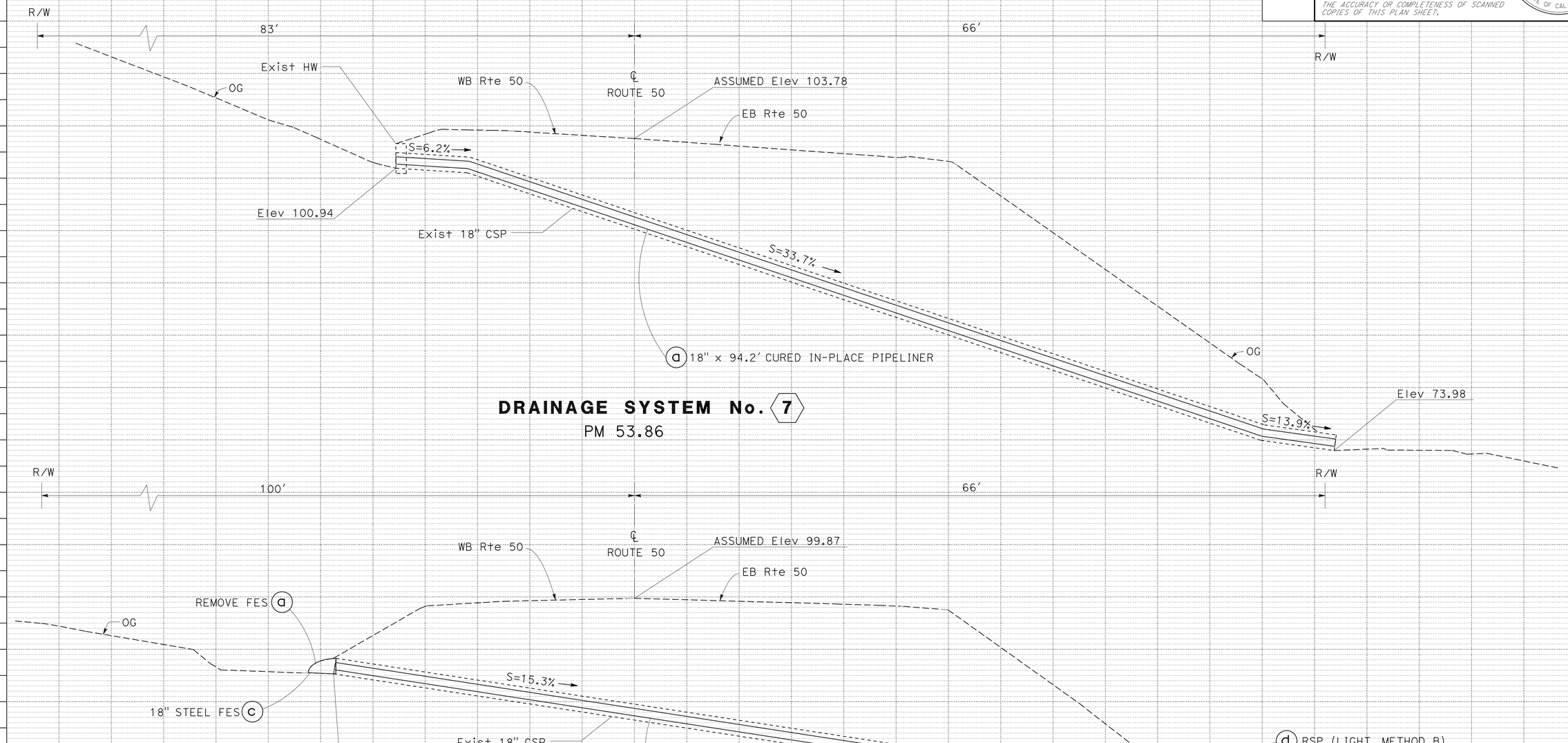

DRAINAGE SYSTEM No. 7
PM 53.86

DRAINAGE SYSTEM No. 8
PM 53.98

DRAINAGE PROFILES
SCALE: Horiz 1" = 5'
Vert 1" = 5'

DP-4

REVISED BY | DATE REVISED
NIK BEACH | RONALD S. SYKES
CALCULATED-DESIGNED BY | CHECKED BY
FUNCTIONAL SUPERVISOR | RONALD S. SYKES
STATE OF CALIFORNIA - DEPARTMENT OF TRANSPORTATION
Caltrans® MAINTENANCE

LAST REVISION 08-15-11
DATE PLOTTED => 15-NOV-2011
TIME PLOTTED => 08:22

Dist	COUNTY	ROUTE	POST MILES TOTAL PROJECT	SHEET No.	TOTAL SHEETS
03	ED	50	53.4/56.3	6	28

REGISTERED CIVIL ENGINEER 11-14-11 DATE

11-21-11
PLANS APPROVAL DATE

REGISTERED PROFESSIONAL ENGINEER RONALD S. SYKES No. 35526 Exp 9-30-13 CIVIL STATE OF CALIFORNIA

THE STATE OF CALIFORNIA OR ITS OFFICERS OR AGENTS SHALL NOT BE RESPONSIBLE FOR THE ACCURACY OR COMPLETENESS OF SCANNED COPIES OF THIS PLAN SHEET.

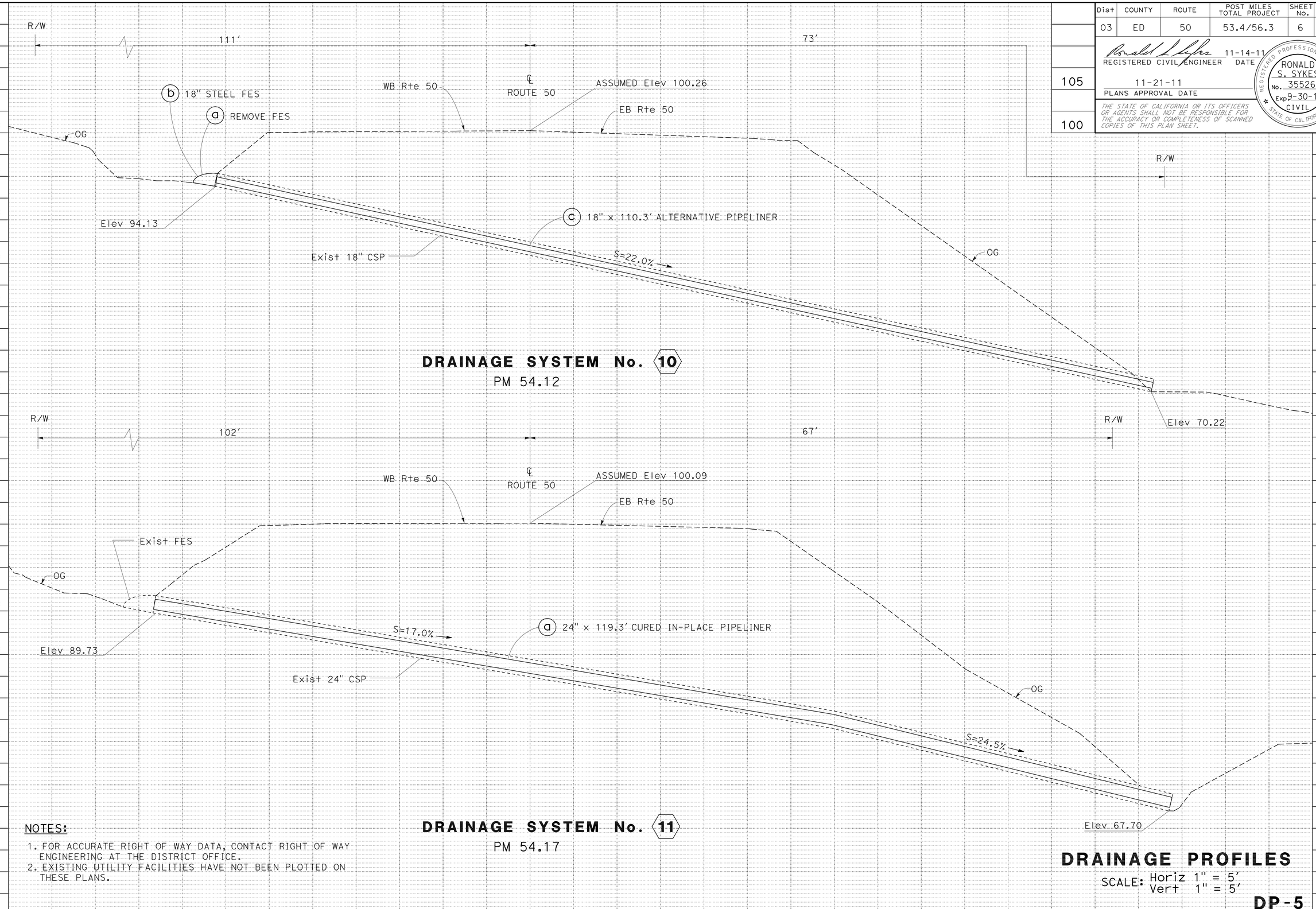

NOTES:

1. FOR ACCURATE RIGHT OF WAY DATA, CONTACT RIGHT OF WAY ENGINEERING AT THE DISTRICT OFFICE.
2. EXISTING UTILITY FACILITIES HAVE NOT BEEN PLOTTED ON THESE PLANS.

DRAINAGE PROFILES

SCALE: Horiz 1" = 5′
Vert 1" = 5′

DP-5

STATE OF CALIFORNIA - DEPARTMENT OF TRANSPORTATION
Caltrans® MAINTENANCE

FUNCTIONAL SUPERVISOR: RONALD S. SYKES
CALCULATED-DESIGNED BY: NIK BEACH
CHECKED BY: RONALD S. SYKES
REVISED BY
DATE REVISED

LAST REVISION 08-15-11
DATE PLOTTED => 15-NOV-2011
TIME PLOTTED => 08:22

Dist	COUNTY	ROUTE	POST MILES TOTAL PROJECT	SHEET No.	TOTAL SHEETS
03	ED	50	53.4/56.3	7	28

REGISTERED CIVIL ENGINEER 11-14-11 DATE

11-21-11
PLANS APPROVAL DATE

REGISTERED PROFESSIONAL ENGINEER RONALD S. SYKES No. 35526 Exp 9-30-13 CIVIL STATE OF CALIFORNIA

THE STATE OF CALIFORNIA OR ITS OFFICERS OR AGENTS SHALL NOT BE RESPONSIBLE FOR THE ACCURACY OR COMPLETENESS OF SCANNED COPIES OF THIS PLAN SHEET.

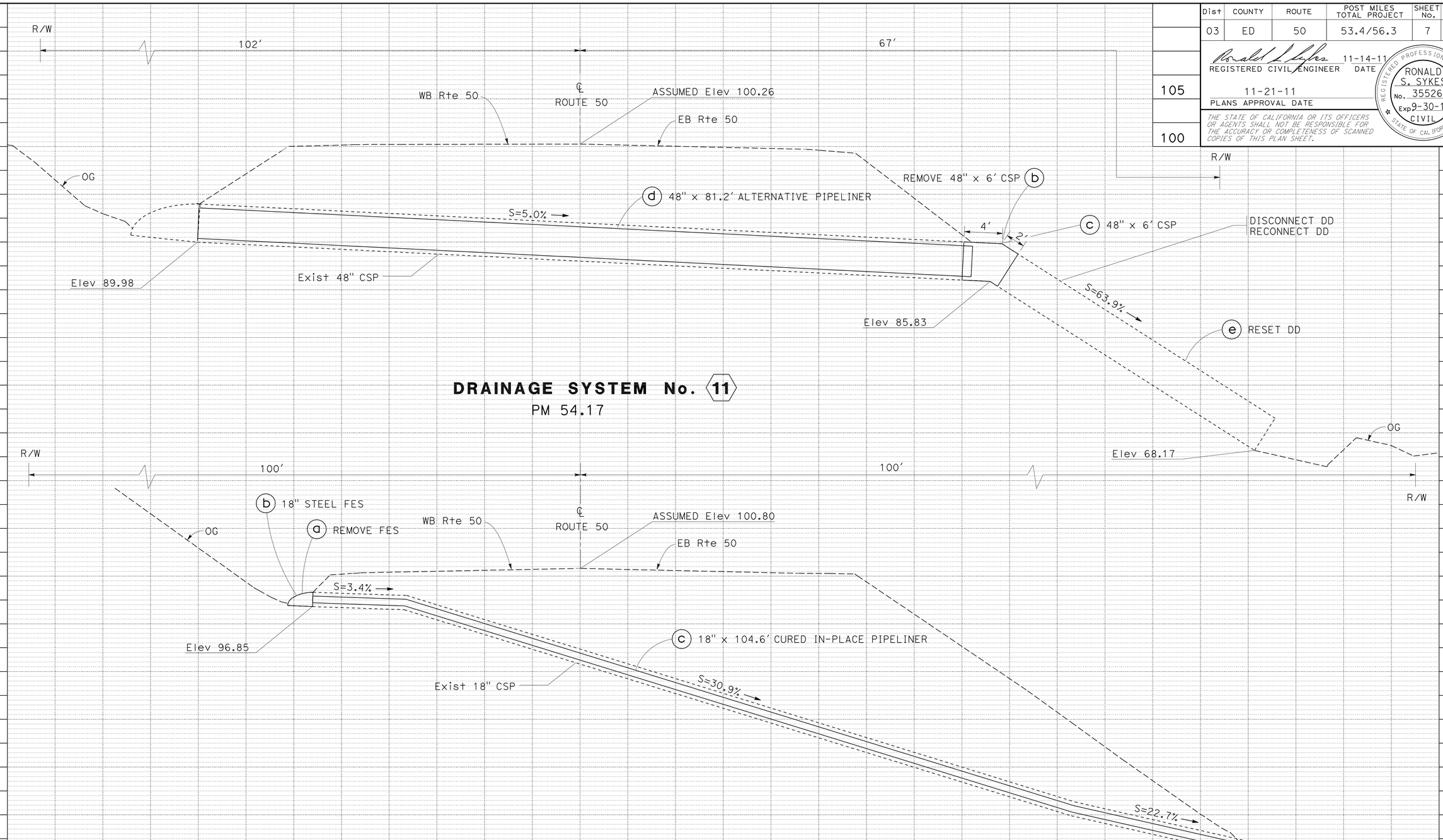

DRAINAGE SYSTEM No. 11
PM 54.17

DRAINAGE SYSTEM No. 12
PM 54.23

NOTES:

1. FOR ACCURATE RIGHT OF WAY DATA, CONTACT RIGHT OF WAY ENGINEERING AT THE DISTRICT OFFICE.
2. EXISTING UTILITY FACILITIES HAVE NOT BEEN PLOTTED ON THESE PLANS.

DRAINAGE PROFILES

SCALE: Horiz 1" = 5′
Vert 1" = 5′

DP-6

REVISED BY | DATE REVISED
NIK BEACH | RONALD S. SYKES
CALCULATED-DESIGNED BY | CHECKED BY
FUNCTIONAL SUPERVISOR | RONALD S. SYKES
STATE OF CALIFORNIA - DEPARTMENT OF TRANSPORTATION
Caltrans® MAINTENANCE

LAST REVISION 08-24-11 | DATE PLOTTED => 15-NOV-2011 | TIME PLOTTED => 08:22

Dist	COUNTY	ROUTE	POST MILES TOTAL PROJECT	SHEET No.	TOTAL SHEETS
03	ED	50	53.4/56.3	8	28

REGISTERED CIVIL ENGINEER 11-14-11 DATE

11-21-11
PLANS APPROVAL DATE

REGISTERED PROFESSIONAL ENGINEER RONALD S. SYKES No. 35526 Exp 9-30-13 CIVIL STATE OF CALIFORNIA

THE STATE OF CALIFORNIA OR ITS OFFICERS OR AGENTS SHALL NOT BE RESPONSIBLE FOR THE ACCURACY OR COMPLETENESS OF SCANNED COPIES OF THIS PLAN SHEET.

NOTES:

1. FOR ACCURATE RIGHT OF WAY DATA, CONTACT RIGHT OF WAY ENGINEERING AT THE DISTRICT OFFICE.
2. EXISTING UTILITY FACILITIES HAVE NOT BEEN PLOTTED ON THESE PLANS.

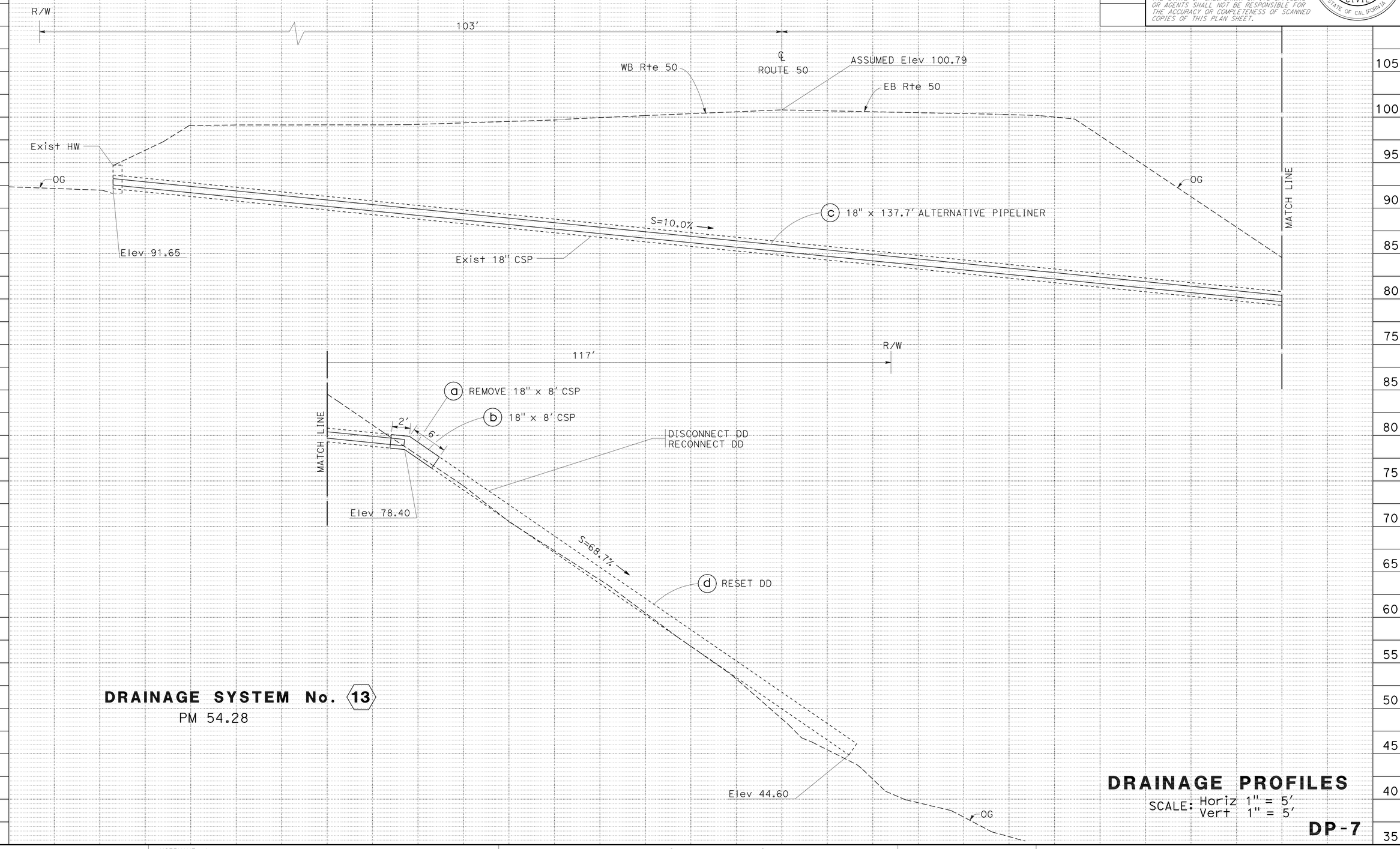

DRAINAGE SYSTEM No. 13
PM 54.28

DRAINAGE PROFILES
SCALE: Horiz 1" = 5'
Vert 1" = 5'

DP-7

STATE OF CALIFORNIA - DEPARTMENT OF TRANSPORTATION
Caltrans
MAINTENANCE

FUNCTIONAL SUPERVISOR: RONALD S. SYKES
CALCULATED-DESIGNED BY: NIK BEACH
CHECKED BY: RONALD S. SYKES
REVISED BY
DATE REVISED

LAST REVISION 08-24-11
DATE PLOTTED => 15-NOV-2011
TIME PLOTTED => 08:22

Dist	COUNTY	ROUTE	POST MILES TOTAL PROJECT	SHEET No.	TOTAL SHEETS
03	ED	50	53.4/56.3	9	28

REGISTERED CIVIL ENGINEER 11-14-11 DATE

11-21-11
PLANS APPROVAL DATE

REGISTERED PROFESSIONAL ENGINEER RONALD S. SYKES No. 35526 Exp 9-30-13 CIVIL STATE OF CALIFORNIA

THE STATE OF CALIFORNIA OR ITS OFFICERS OR AGENTS SHALL NOT BE RESPONSIBLE FOR THE ACCURACY OR COMPLETENESS OF SCANNED COPIES OF THIS PLAN SHEET.

NOTES:

1. FOR ACCURATE RIGHT OF WAY DATA, CONTACT RIGHT OF WAY ENGINEERING AT THE DISTRICT OFFICE.
2. EXISTING UTILITY FACILITIES HAVE NOT BEEN PLOTTED ON THESE PLANS.

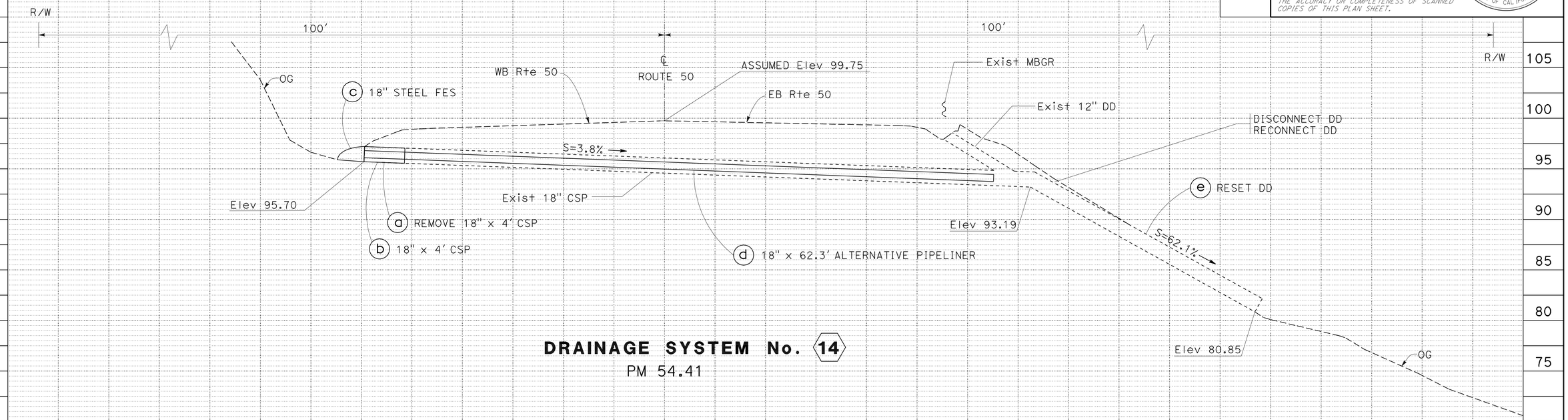

DRAINAGE SYSTEM No. 14
PM 54.41

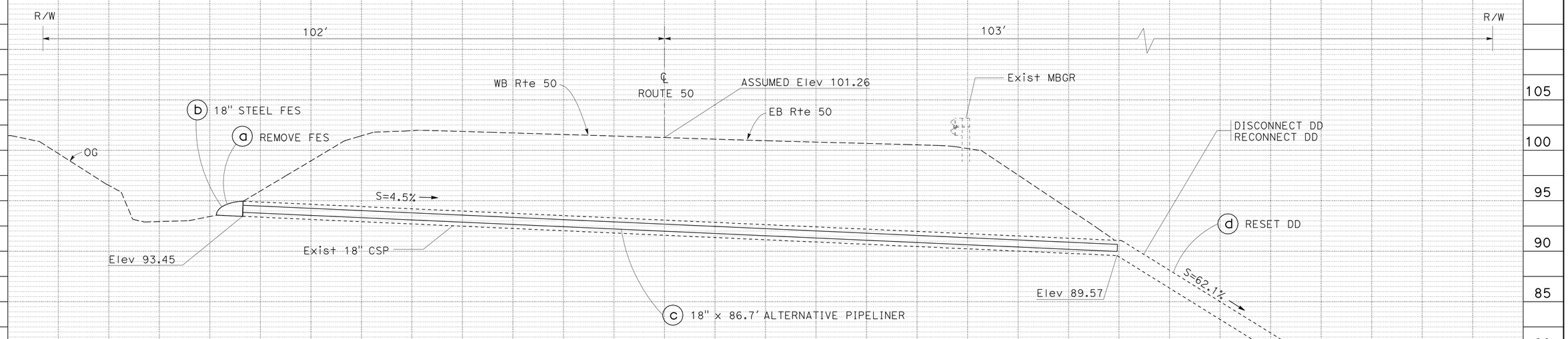

DRAINAGE SYSTEM No. 15
PM 54.49

DRAINAGE PROFILES

SCALE: Horiz 1" = 5'
Vert 1" = 5'

DP-8

REVISED BY | DATE REVISED
NIK BEACH | RONALD S. SYKES
CALCULATED-DESIGNED BY | CHECKED BY
FUNCTIONAL SUPERVISOR | RONALD S. SYKES
STATE OF CALIFORNIA - DEPARTMENT OF TRANSPORTATION
Caltrans® MAINTENANCE

LAST REVISION 08-24-11 | DATE PLOTTED => 15-NOV-2011 | TIME PLOTTED => 08:22

Dist	COUNTY	ROUTE	POST MILES TOTAL PROJECT	SHEET No.	TOTAL SHEETS
03	ED	50	53.4/56.3	10	28

REGISTERED CIVIL ENGINEER 11-14-11 DATE

11-21-11
PLANS APPROVAL DATE

REGISTERED PROFESSIONAL ENGINEER RONALD S. SYKES No. 35526 Exp 9-30-13 CIVIL STATE OF CALIFORNIA

THE STATE OF CALIFORNIA OR ITS OFFICERS OR AGENTS SHALL NOT BE RESPONSIBLE FOR THE ACCURACY OR COMPLETENESS OF SCANNED COPIES OF THIS PLAN SHEET.

NOTES:

1. FOR ACCURATE RIGHT OF WAY DATA, CONTACT RIGHT OF WAY ENGINEERING AT THE DISTRICT OFFICE.
2. EXISTING UTILITY FACILITIES HAVE NOT BEEN PLOTTED ON THESE PLANS.

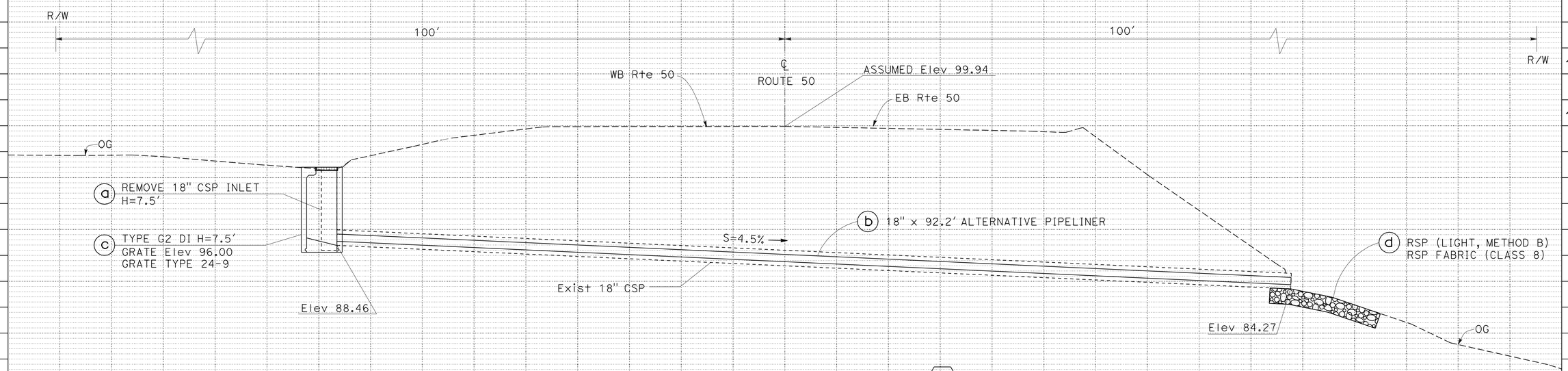

DRAINAGE SYSTEM No. 16

PM 54.57

DRAINAGE PROFILES

SCALE: Horiz 1" = 5′
Vert 1" = 5′

DP-9

STATE OF CALIFORNIA - DEPARTMENT OF TRANSPORTATION
Caltrans
MAINTENANCE

FUNCTIONAL SUPERVISOR: RONALD S. SYKES
CALCULATED-DESIGNED BY: NIK BEACH
CHECKED BY: RONALD S. SYKES
REVISED BY
DATE REVISED

LAST REVISION 08-23-11
DATE PLOTTED => 15-NOV-2011
TIME PLOTTED => 08:22

Dist	COUNTY	ROUTE	POST MILES TOTAL PROJECT	SHEET No.	TOTAL SHEETS
03	ED	50	53.4/56.3	11	28

REGISTERED CIVIL ENGINEER 11-14-11 DATE

11-21-11
PLANS APPROVAL DATE

REGISTERED PROFESSIONAL ENGINEER RONALD S. SYKES No. 35526 Exp 9-30-13 CIVIL STATE OF CALIFORNIA

THE STATE OF CALIFORNIA OR ITS OFFICERS OR AGENTS SHALL NOT BE RESPONSIBLE FOR THE ACCURACY OR COMPLETENESS OF SCANNED COPIES OF THIS PLAN SHEET.

NOTES:

1. FOR ACCURATE RIGHT OF WAY DATA, CONTACT RIGHT OF WAY ENGINEERING AT THE DISTRICT OFFICE.
2. EXISTING UTILITY FACILITIES HAVE NOT BEEN PLOTTED ON THESE PLANS.

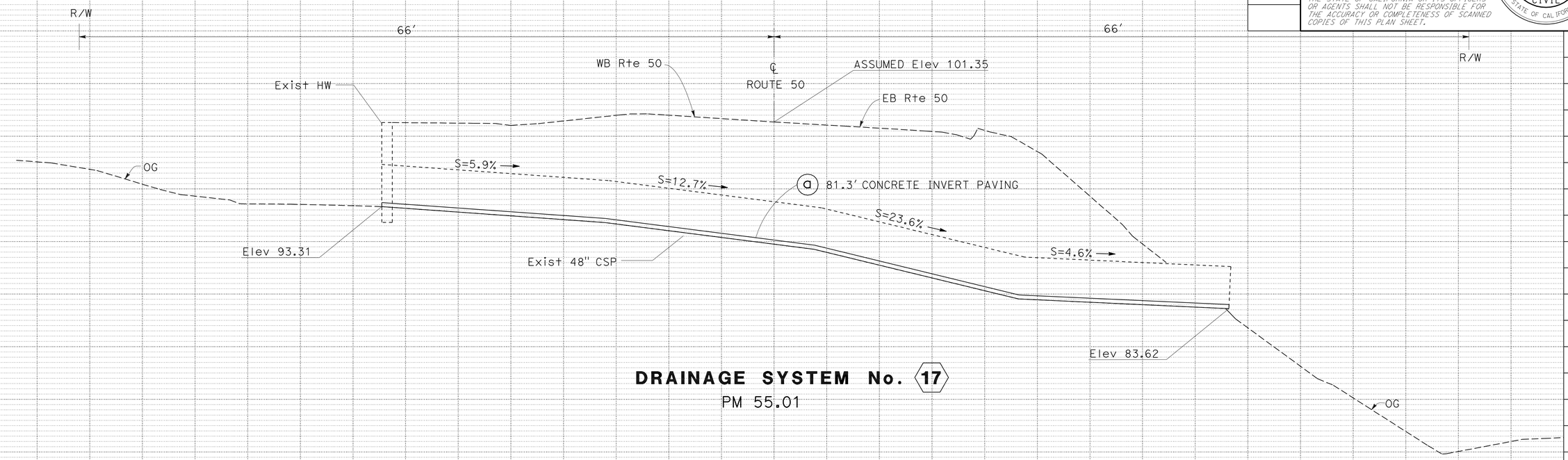

DRAINAGE SYSTEM No. 17
PM 55.01

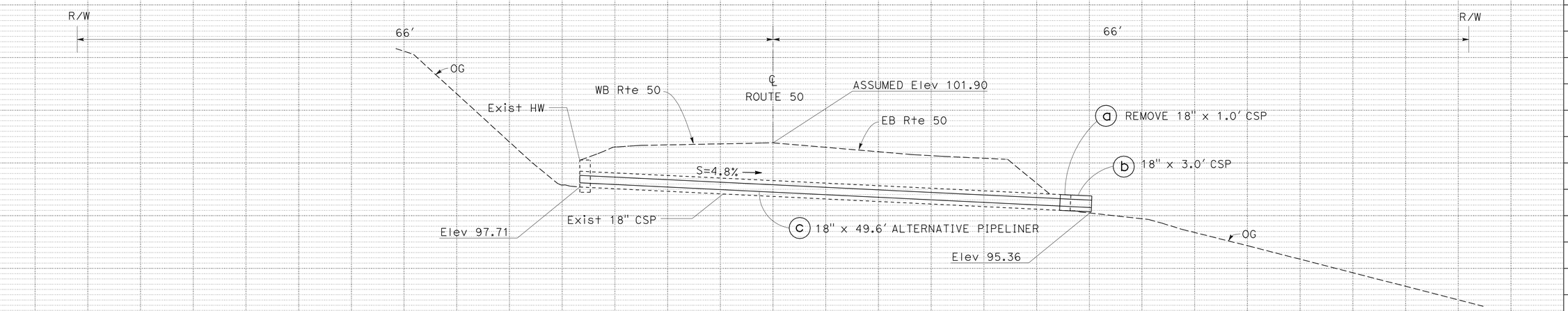

DRAINAGE SYSTEM No. 18
PM 55.74

DRAINAGE PROFILES

SCALE: Horiz 1" = 5'
Vert 1" = 5'

DP-10

REVISED BY	DATE REVISED
NIK BEACH	RONALD S. SYKES
CALCULATED-DESIGNED BY	CHECKED BY
FUNCTIONAL SUPERVISOR	RONALD S. SYKES

STATE OF CALIFORNIA - DEPARTMENT OF TRANSPORTATION
Caltrans
MAINTENANCE

LAST REVISION 08-23-11 | DATE PLOTTED => 15-NOV-2011 | TIME PLOTTED => 08:22

Dist	COUNTY	ROUTE	POST MILES TOTAL PROJECT	SHEET No.	TOTAL SHEETS
03	ED	50	53.4/56.3	12	28

REGISTERED CIVIL ENGINEER 11-14-11 DATE

11-21-11
PLANS APPROVAL DATE

REGISTERED PROFESSIONAL ENGINEER RONALD S. SYKES No. 35526 Exp 9-30-13 CIVIL STATE OF CALIFORNIA

THE STATE OF CALIFORNIA OR ITS OFFICERS OR AGENTS SHALL NOT BE RESPONSIBLE FOR THE ACCURACY OR COMPLETENESS OF SCANNED COPIES OF THIS PLAN SHEET.

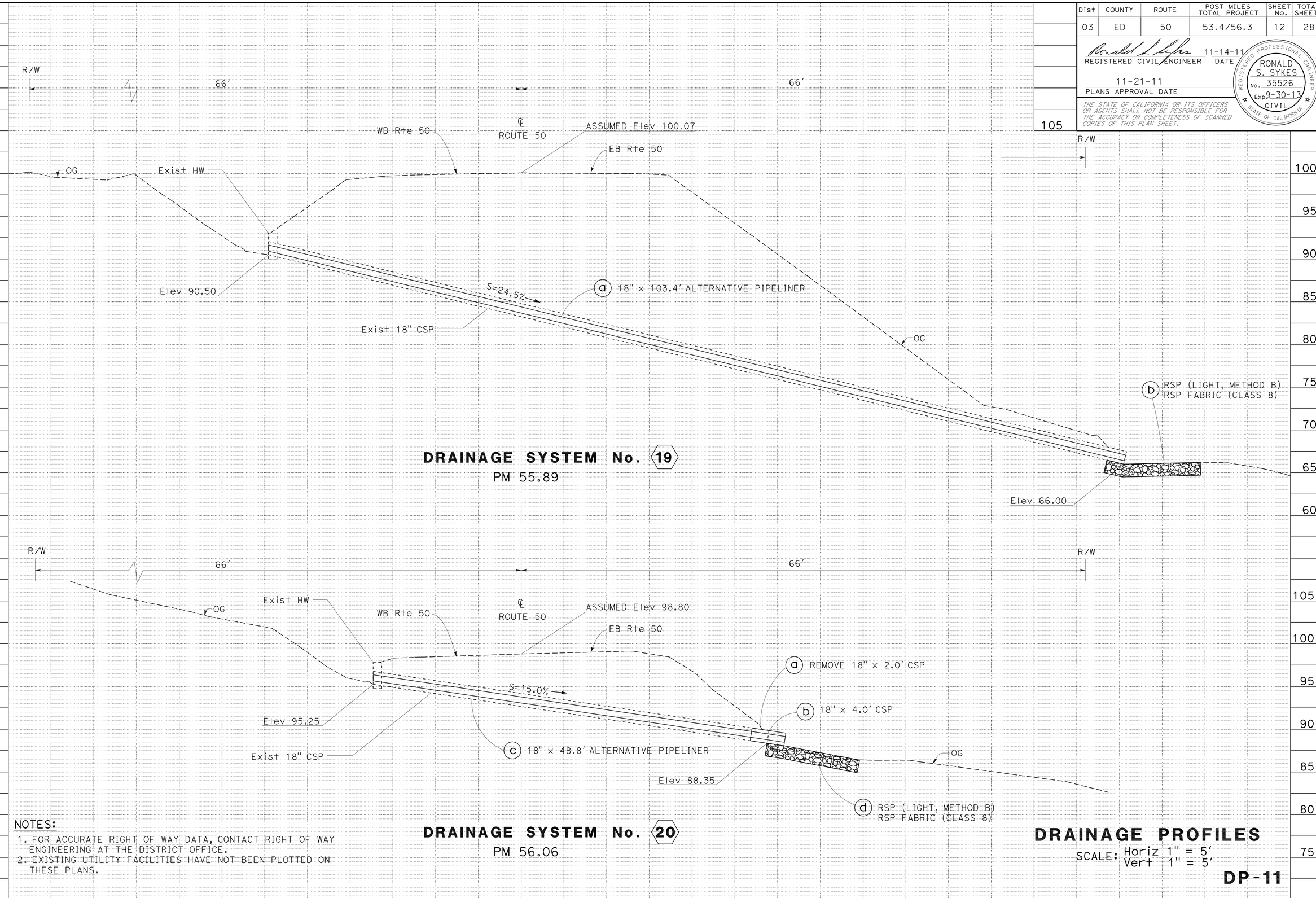

DRAINAGE SYSTEM No. 19
PM 55.89

DRAINAGE SYSTEM No. 20
PM 56.06

NOTES:
1. FOR ACCURATE RIGHT OF WAY DATA, CONTACT RIGHT OF WAY ENGINEERING AT THE DISTRICT OFFICE.
2. EXISTING UTILITY FACILITIES HAVE NOT BEEN PLOTTED ON THESE PLANS.

DRAINAGE PROFILES

SCALE: Horiz 1" = 5′
Vert 1" = 5′

DP-11

REVISED BY | DATE REVISED
NIK BEACH | RONALD S. SYKES
CALCULATED-DESIGNED BY | CHECKED BY
FUNCTIONAL SUPERVISOR | RONALD S. SYKES
STATE OF CALIFORNIA - DEPARTMENT OF TRANSPORTATION
Caltrans® MAINTENANCE

LAST REVISION 08-15-11
DATE PLOTTED => 15-NOV-2011
TIME PLOTTED => 08:22

Dist	COUNTY	ROUTE	POST MILES TOTAL PROJECT	SHEET No.	TOTAL SHEETS
03	ED	50	53.4/56.3	13	28

REGISTERED CIVIL ENGINEER 11-14-11 DATE

11-21-11
PLANS APPROVAL DATE

REGISTERED PROFESSIONAL ENGINEER RONALD S. SYKES No. 35526 Exp 9-30-13 CIVIL STATE OF CALIFORNIA

THE STATE OF CALIFORNIA OR ITS OFFICERS OR AGENTS SHALL NOT BE RESPONSIBLE FOR THE ACCURACY OR COMPLETENESS OF SCANNED COPIES OF THIS PLAN SHEET.

NOTES:

1. FOR ACCURATE RIGHT OF WAY DATA, CONTACT RIGHT OF WAY ENGINEERING AT THE DISTRICT OFFICE.
2. EXISTING UTILITY FACILITIES HAVE NOT BEEN PLOTTED ON THESE PLANS.

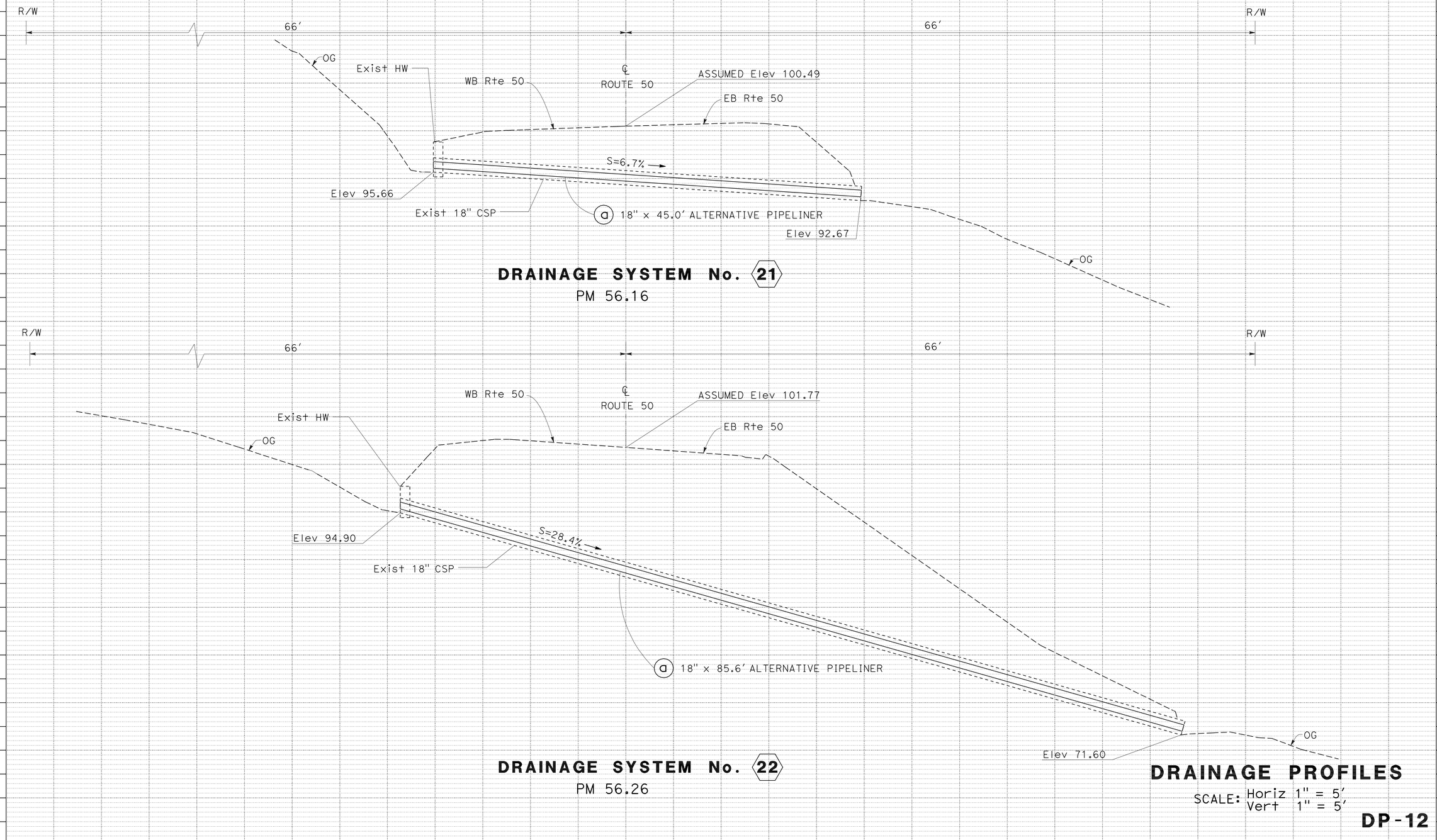

DRAINAGE PROFILES

SCALE: Horiz 1" = 5′
Vert 1" = 5′

DP-12

REVISED BY	DATE REVISED
NIK BEACH	RONALD S. SYKES
CALCULATED-DESIGNED BY	CHECKED BY
FUNCTIONAL SUPERVISOR	RONALD S. SYKES

STATE OF CALIFORNIA - DEPARTMENT OF TRANSPORTATION
Caltrans
MAINTENANCE

LAST REVISION 08-29-11 | DATE PLOTTED => 15-NOV-2011 | TIME PLOTTED => 08:22

Dist	COUNTY	ROUTE	POST MILES TOTAL PROJECT	SHEET No.	TOTAL SHEETS
03	ED	50	53.4/56.3	14	28

REGISTERED CIVIL ENGINEER 11-14-11 DATE

11-21-11
PLANS APPROVAL DATE

REGISTERED PROFESSIONAL ENGINEER RONALD S. SYKES No. 35526 Exp 9-30-13 CIVIL STATE OF CALIFORNIA

THE STATE OF CALIFORNIA OR ITS OFFICERS OR AGENTS SHALL NOT BE RESPONSIBLE FOR THE ACCURACY OR COMPLETENESS OF SCANNED COPIES OF THIS PLAN SHEET.

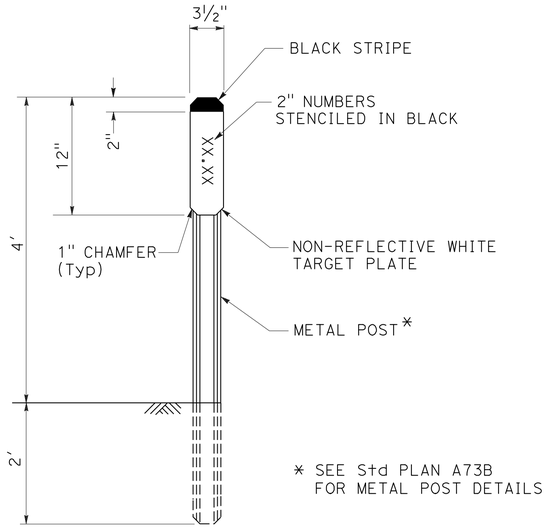

STENCILED NUMBERS

DRAINAGE SYSTEM No.	XX.XX
1	53.35
2	53.44
3	53.56
4	53.63
5	53.73
6	53.80
7	53.86
8	53.98
9	54.09
10	54.12
11	54.17
12	54.23
13	54.28
14	54.41
15	54.49
16	54.57
17	55.01
18	55.74
19	55.89
20	56.06
21	56.16
22	56.26

MARKER (CULVERT)

MARKER (CULVERT) NOTES:

1. PLACE TWO EACH PER LOCATION (LEFT AND RIGHT).
2. PLACE MINIMUM 2' AND MAXIMUM 12' FROM EDGE OF PAVEMENT.
3. EXACT LOCATION TO BE DETERMINED BY THE ENGINEER.

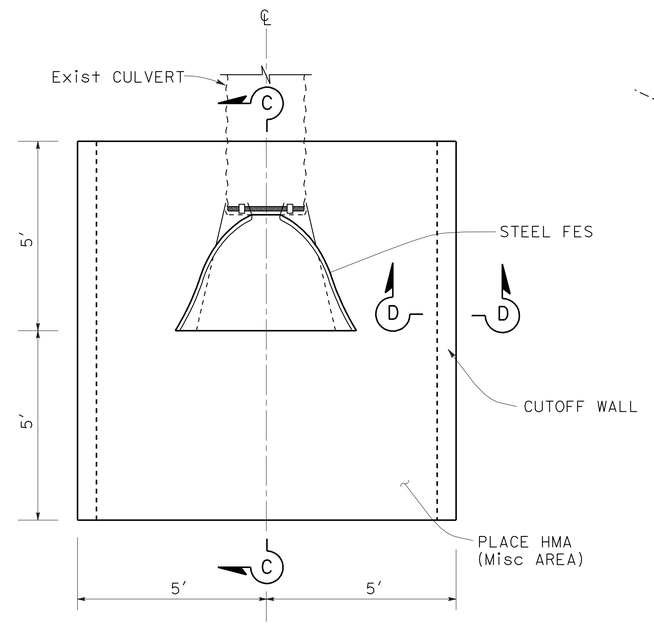

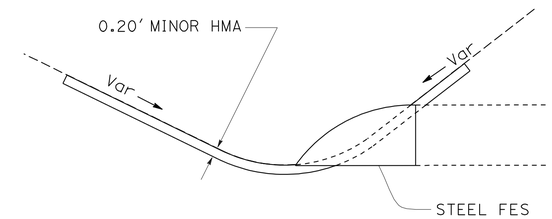

SECTION C-C

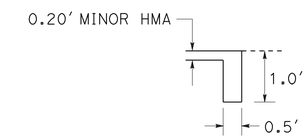

SECTION D-D

Misc HMA AT INLET

DRAINAGE SYSTEM No. 8, 9, 10, 12, 14, 15

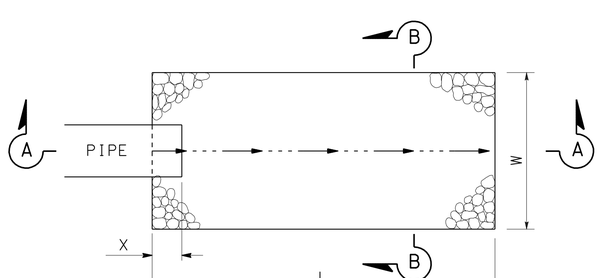

PLAN

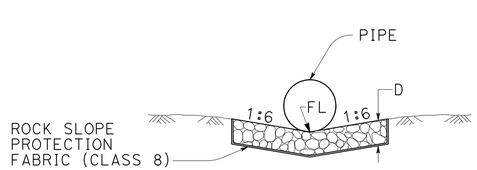

SECTION B-B

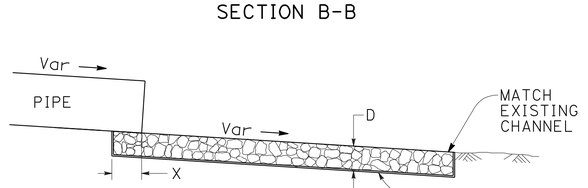

SECTION A-A

DRAINAGE SYSTEM No.	LOCATION PM	X FT	L FT	W FT	D FT
5	53.73	3.4	18.4	8.0	1.5-3.0
8	53.98	2.0	11.0	4.5	1.5
16	54.57	2.0	11.0	4.5	1.5
19	55.89	2.0	11.0	4.5	1.5
20	56.06	2.0	11.0	4.5	1.5

ROCK SLOPE PROTECTION

DRAINAGE DETAILS

NO SCALE

DD-1

STATE OF CALIFORNIA - DEPARTMENT OF TRANSPORTATION
Caltrans
MAINTENANCE

FUNCTIONAL SUPERVISOR: RONALD S. SYKES
CALCULATED-DESIGNED BY: NIK BEACH
CHECKED BY: RONALD S. SYKES
REVISED BY
DATE REVISED

LAST REVISION 08-15-11
DATE PLOTTED => 15-NOV-2011
TIME PLOTTED => 08:22

Dist	COUNTY	ROUTE	POST MILES TOTAL PROJECT	SHEET No.	TOTAL SHEETS
03	ED	50	53.4/56.3	15	28

REGISTERED CIVIL ENGINEER 11-14-11 DATE

11-21-11
PLANS APPROVAL DATE

REGISTERED PROFESSIONAL ENGINEER RONALD S. SYKES No. 35526 Exp 9-30-13 CIVIL STATE OF CALIFORNIA

THE STATE OF CALIFORNIA OR ITS OFFICERS OR AGENTS SHALL NOT BE RESPONSIBLE FOR THE ACCURACY OR COMPLETENESS OF SCANNED COPIES OF THIS PLAN SHEET.

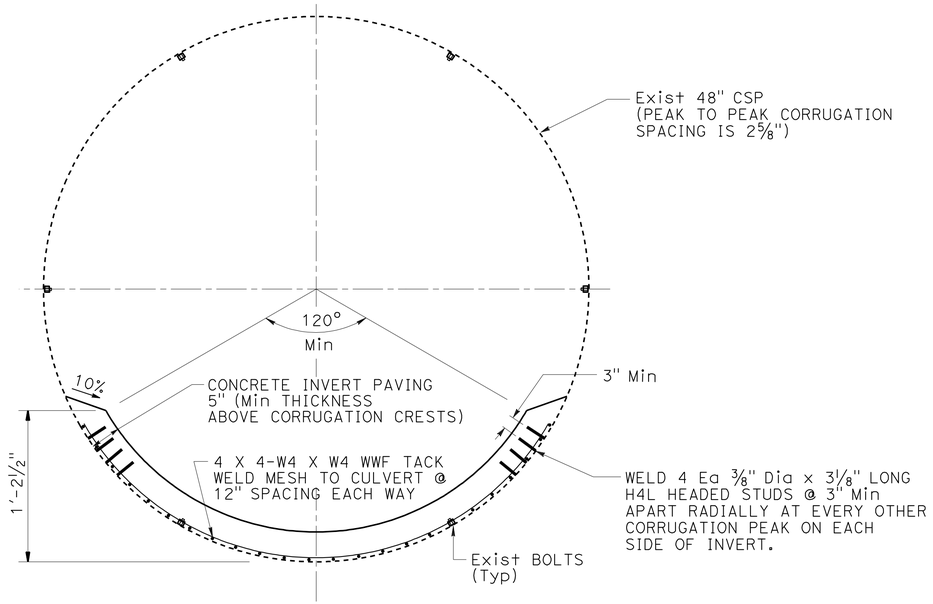

INVERT PAVING DETAIL - SECTION

DRAINAGE SYSTEM No. 17

INVERT PAVING NOTES:

1. ANY WATER DIVERSION SCHEDULED AND CONDUCTED BY THE CONTRACTOR PRIOR TO AND DURING THE REPLACEMENT OF PAVEMENT SHALL BE TO THE SATISFACTION OF THE ENGINEER.
2. THE CONTRACTOR SHALL CLEAN THE ENTIRE INTERIOR SURFACE TO BE REPAIRED WITH HIGH-PRESSURE WATER JET AND/OR WET SANDBLASTING, AND THE SURFACE SHALL BE FREE OF RUST FLAKES TO THE SATISFACTION OF THE ENGINEER.
3. THE STUDS SHALL BE PLACED 3" ON CENTER TRANSVERSELY (CIRCUMFERENTIALLY).
4. THE PAVEMENT SHALL BE FINISHED TO A SMOOTH SURFACE ACCEPTABLE TO THE ENGINEER.
5. THE CONCRETE SHALL BE CURED IN CONFORMANCE WITH THE PROVISIONS IN SECTION 90-7 OF THE STANDARD SPECIFICATIONS MAY 2006.
6. THE CONCRETE SHALL BE CURED FOR A MINIMUM PERIOD OF 48 HOURS BEFORE ANY WATER IS PERMITTED TO FLOW IN THE INVERT.
7. THE CONCRETE SHALL BE ROUNDED WITH 3" RADIUS ON A 1:1 BEVEL AT THE INLET & OUTLET ENDS OF THE PIPE.

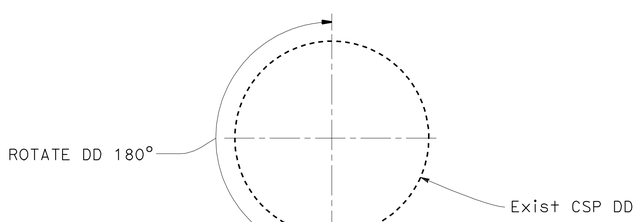

RESET DOWNDRAIN DETAIL - SECTION

DRAINAGE SYSTEM No. 11, 13, 14, 15

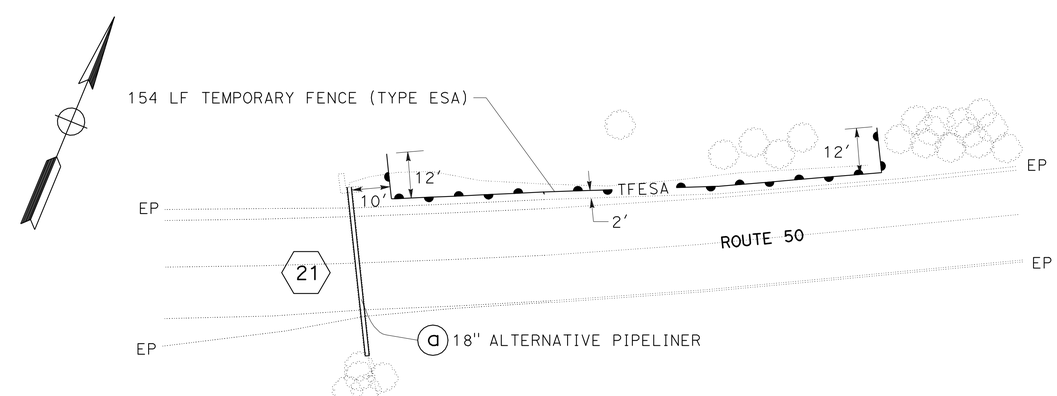

TEMPORARY FENCE (TYPE ESA) - PLAN

DRAINAGE SYSTEM No. 21

DRAINAGE DETAILS

NO SCALE

DD-2

STATE OF CALIFORNIA - DEPARTMENT OF TRANSPORTATION
Caltrans MAINTENANCE

FUNCTIONAL SUPERVISOR: RONALD S. SYKES
CALCULATED-DESIGNED BY: NIK BEACH
CHECKED BY: RONALD S. SYKES
REVISED BY
DATE REVISED

LAST REVISION 08-23-11
DATE PLOTTED => 15-NOV-2011
TIME PLOTTED => 08:22

Dist	COUNTY	ROUTE	POST MILES TOTAL PROJECT	SHEET No.	TOTAL SHEETS
03	ED	50	53.4/56.3	16	28

REGISTERED CIVIL ENGINEER 11-14-11 DATE

11-21-11
PLANS APPROVAL DATE

REGISTERED PROFESSIONAL ENGINEER RONALD S. SYKES No. 35526 Exp 9-30-13 CIVIL STATE OF CALIFORNIA

THE STATE OF CALIFORNIA OR ITS OFFICERS OR AGENTS SHALL NOT BE RESPONSIBLE FOR THE ACCURACY OR COMPLETENESS OF SCANNED COPIES OF THIS PLAN SHEET.

ALTERNATIVE PIPELINERS

DESCRIPTION	DEFORMED/REFORMED HDPE PIPELINER	CURED-IN-PLACE PIPELINER	PLASTIC PIPELINER*
18" ALTERNATIVE PIPELINER	X	X	
48" ALTERNATIVE PIPELINER		X	X

*PLASTIC PIPELINER SHALL BE 42" OUTSIDE DIAMETER, STANDARD DIMENSION RATIO 26, HDPE.

ABBREVIATIONS:
S - STANDARD
HDPE - HIGH DENSITY POLYETHYLENE

DRAINAGE QUANTITIES

DRAINAGE SYSTEM No. ⬡	DRAINAGE UNIT ○	18" ALTERNATIVE PIPELINER LF	48" ALTERNATIVE PIPELINER LF	18" CURED-IN-PLACE PIPELINER LF	24" CURED-IN-PLACE PIPELINER LF	CONCRETE INVERT PAVING CY	REMOVE FLARED END SECTION EA	REMOVE 18" CORRUGATED STEEL PIPE LF	REMOVE 24" CORRUGATED STEEL PIPE LF	REMOVE 48" CORRUGATED STEEL PIPE LF	18" CORRUGATED STEEL PIPE (.109" THICK) LF	48" CORRUGATED STEEL PIPE (.109" THICK) LF	RESET DOWNDRAIN EA	18" STEEL FLARED END SECTION EA	REMOVE INLET EA	MINOR CONCRETE (MINOR STRUCTURE) CY	MISCELLANEOUS IRON AND STEEL LBS	ROCK SLOPE PROTECTION (LIGHT, METHOD B) TON	ROCK SLOPE PROTECTION FABRIC (CLASS 8) SQYD	PLACE HOT MIX ASPHALT (MISCELLANEOUS AREA) SQYD	MINOR HOT MIX ASPHALT TON	REMOVE MARKER (CULVERT) EA	MARKER (CULVERT) EA	(N) PIPE JOINT CLASSIFICATION	(N) HEIGHT OF INLET LF	(N) REMOVE TREE EA	(N) DISCONNECT DOWNDRAIN RECONNECT DOWNDRAIN EA	DESCRIPTION	DRAINAGE SHEET No.	DRAINAGE SYSTEM No. ⬡	DRAINAGE UNIT ○
1	a				105.2																	2	2					24" CURED IN-PLACE PIPELINER	DP-1	1	a
2	a	78.2																				2	2			1		18" ALTERNATIVE PIPELINER		2	a
3	a	104.0																				2	2					18" ALTERNATIVE PIPELINER	DP-2	3	a
4	a	66.8																				2	2					18" ALTERNATIVE PIPELINER		4	a
5	a								2.0													2	2					REMOVE 24" CSP	DP-3	5	a
	b				54.7																							24" CURED IN-PLACE PIPELINER			b
	c																	19.1	34.0									RSP			c
6	a	52.6																				2	2					18" ALTERNATIVE PIPELINER		6	a
7	a			94.2																		2	2					18" CURED IN-PLACE PIPELINER	DP-4	7	a
8	a						1															2	2					REMOVE FES		8	a
	b	82.1																										18" ALTERNATIVE PIPELINER			b
	c													1						10.3	2.0							18" FES			c
	d																	5.9	10.7									RSP			d
9	a						1															2	2					REMOVE FES	DD-1	9	a
	b													1						10.3	2.0							18" FES			b
		383.7	0	94.2	159.9	0	2	0	2.0	0	0	0	0	2	0	0	0	25.0	44.7	20.6	0	18	18			1	0	SHEET DQ-1 TOTAL			

(N) - NOT A SEPARATE PAY ITEM, FOR INFORMATION ONLY

DRAINAGE QUANTITIES
DQ-1

REVISED BY | DATE REVISED
NIK BEACH | RONALD S. SYKES
CALCULATED-DESIGNED BY | CHECKED BY
FUNCTIONAL SUPERVISOR
RONALD S. SYKES

STATE OF CALIFORNIA - DEPARTMENT OF TRANSPORTATION
Caltrans
MAINTENANCE

LAST REVISION 08-24-11 | DATE PLOTTED => 15-NOV-2011 | TIME PLOTTED => 08:22

Dist	COUNTY	ROUTE	POST MILES TOTAL PROJECT	SHEET No.	TOTAL SHEETS
03	ED	50	53.4/56.3	17	28

REGISTERED CIVIL ENGINEER 11-14-11 DATE

11-21-11
PLANS APPROVAL DATE

REGISTERED PROFESSIONAL ENGINEER RONALD S. SYKES No. 35526 Exp 9-30-13 CIVIL STATE OF CALIFORNIA

THE STATE OF CALIFORNIA OR ITS OFFICERS OR AGENTS SHALL NOT BE RESPONSIBLE FOR THE ACCURACY OR COMPLETENESS OF SCANNED COPIES OF THIS PLAN SHEET.

DRAINAGE QUANTITIES

DRAINAGE SYSTEM No. ⬡	DRAINAGE UNIT ○	18" ALTERNATIVE PIPELINER LF	48" ALTERNATIVE PIPELINER LF	18" CURED-IN-PLACE PIPELINER LF	24" CURED-IN-PLACE PIPELINER LF	CONCRETE INVERT PAVING CY	REMOVE FLARED END SECTION EA	REMOVE 18" CORRUGATED STEEL PIPE LF	REMOVE 24" CORRUGATED STEEL PIPE LF	REMOVE 48" CORRUGATED STEEL PIPE LF	18" CORRUGATED STEEL PIPE (.109" THICK) LF	48" CORRUGATED STEEL PIPE (.109" THICK) LF	RESET DOWNDRAIN EA	18" STEEL FLARED END SECTION EA	REMOVE INLET EA	MINOR CONCRETE (MINOR STRUCTURE) CY	MISCELLANEOUS IRON AND STEEL LBS	ROCK SLOPE PROTECTION (LIGHT, METHOD B) TON	ROCK SLOPE PROTECTION FABRIC (CLASS 8) SQYD	PLACE HOT MIX ASPHALT (MISCELLANEOUS AREA) SQYD	MINOR HOT MIX ASPHALT TON	REMOVE MARKER (CULVERT) EA	MARKER (CULVERT) EA	PIPE JOINT CLASSIFICATION (N)	HEIGHT OF INLET (N) LF	REMOVE TREE (N) EA	DISCONNECT DOWNDRAIN RECONNECT DOWNDRAIN (N) EA	DESCRIPTION	DRAINAGE SHEET No.	DRAINAGE SYSTEM No. ⬡	DRAINAGE UNIT ○
10	a						1																					REMOVE FES	DP-5	10	a
	b													1						10.3	2.0	2	2					18" FES			b
	c	110.3																										18" ALTERNATIVE PIPELINER			c
11	a				119.3																							24" CURED IN-PLACE PIPELINER	DP-6	11	a
	b									6.0																		REMOVE 48" CSP			b
	c											6.0										2	2	DD				48" CSP			c
	d		81.2																								1	48" ALTERNATIVE PIPELINER			d
	e												1															RESET DD			e
12	a						1																					REMOVE FES		12	a
	b													1						10.3	2.0	2	2					18" FES			b
	c			104.6																								18" CURED IN-PLACE PIPELINER			c
13	a							8.0																				REMOVE 18" CSP	DP-7	13	a
	b										8.0											2	2	DD				18" CSP			b
	c	137.7																									1	18" ALTERNATIVE PIPELINER			c
	d												1															RESET DD			d
14	a							4.0																				REMOVE 18" CSP	DP-8	14	a
	b										4.0													S				18" CSP			b
	c													1						10.3	2.0	2	2					18" FES			c
	d	62.3																									1	18" ALTERNATIVE PIPELINER			d
	e												1															RESET DD			e
		310.3	81.2	104.6	119.3	0	2	12.0	0	6.0	12.0	6.0	3	3	0	0	0	0	0	30.9	6.0	10	10			0	3	SHEET DQ-2 TOTAL			

(N) - NOT A SEPARATE PAY ITEM, FOR INFORMATION ONLY

CALCULATED-DESIGNED BY | CHECKED BY | FUNCTIONAL SUPERVISOR | REVISED BY | DATE REVISED

NIK BEACH | RONALD S. SYKES | RONALD S. SYKES

STATE OF CALIFORNIA - DEPARTMENT OF TRANSPORTATION
Caltrans® MAINTENANCE

DRAINAGE QUANTITIES
DQ-2

LAST REVISION 08-24-11 | DATE PLOTTED => 15-NOV-2011 | TIME PLOTTED => 08:22

Dist	COUNTY	ROUTE	POST MILES TOTAL PROJECT	SHEET No.	TOTAL SHEETS
03	ED	50	53.4/56.3	18	28

REGISTERED CIVIL ENGINEER 11-14-11 DATE

11-21-11
PLANS APPROVAL DATE

REGISTERED PROFESSIONAL ENGINEER RONALD S. SYKES No. 35526 Exp 9-30-13 CIVIL STATE OF CALIFORNIA

THE STATE OF CALIFORNIA OR ITS OFFICERS OR AGENTS SHALL NOT BE RESPONSIBLE FOR THE ACCURACY OR COMPLETENESS OF SCANNED COPIES OF THIS PLAN SHEET.

DRAINAGE QUANTITIES

DRAINAGE SYSTEM No. ⬡	DRAINAGE UNIT ○	18" ALTERNATIVE PIPELINER LF	48" ALTERNATIVE PIPELINER LF	18" CURED-IN-PLACE PIPELINER LF	24" CURED-IN-PLACE PIPELINER LF	CONCRETE INVERT PAVING CY	REMOVE FLARED END SECTION EA	REMOVE 18" CORRUGATED STEEL PIPE LF	REMOVE 24" CORRUGATED STEEL PIPE LF	REMOVE 48" CORRUGATED STEEL PIPE LF	18" CORRUGATED STEEL PIPE (.109" THICK) LF	48" CORRUGATED STEEL PIPE (.109" THICK) LF	RESET DOWNDRAIN EA	18" STEEL FLARED END SECTION EA	REMOVE INLET EA	MINOR CONCRETE (MINOR STRUCTURE) CY	MISCELLANEOUS IRON AND STEEL LBS	ROCK SLOPE PROTECTION (LIGHT, METHOD B) TON	ROCK SLOPE PROTECTION FABRIC (CLASS 8) SQYD	PLACE HOT MIX ASPHALT (MISCELLANEOUS AREA) SQYD	MINOR HOT MIX ASPHALT TON	REMOVE MARKER (CULVERT) EA	MARKER (CULVERT) EA	(N) PIPE JOINT CLASSIFICATION	(N) HEIGHT OF INLET LF	(N) REMOVE TREE EA	(N) DISCONNECT DOWNDRAIN RECONNECT DOWNDRAIN EA	DESCRIPTION	DRAINAGE SHEET No.	DRAINAGE SYSTEM No. ⬡	DRAINAGE UNIT ○
15	a						1																					REMOVE FES	DP-8	15	a
	b													1						10.3	2.0	2	2					18" FES			b
	c	86.7																									1	18" ALTERNATIVE PIPELINER			c
	d												1															RESET DD			d
16	a														1													REMOVE INLET	DP-9	16	a
	b	92.2																				2	2					18" ALTERNATIVE PIPELINER			b
	c															2.5	263								7.5			TYPE G2 DI			c
	d																	5.9	10.7									RSP			d
17	a					5.6																2	2					Conc INVERT PAVING	DP-10	17	a
18	a							1.0														2	2					REMOVE 18" CSP		18	a
	b										3.0													S				18" CSP			b
	c	49.6																										18" ALTERNATIVE PIPELINER			c
19	a	103.4																				2	2					18" ALTERNATIVE PIPELINER	DP-11	19	a
	b																	5.9	10.7									RSP			b
20	a							2.0														2	2					REMOVE 18" CSP		20	a
	b										4.0													S				18" CSP			b
	c	48.8																										18" ALTERNATIVE PIPELINER			c
	d																	5.9	10.7									RSP			d
		380.7	0	0	0	5.6	1	3.0	0	0	7.0	0	1	1	1	2.5	263	17.7	32.1	10.3	2.0	12	12			0	1	SHEET DQ-3 TOTAL			

(N) - NOT A SEPARATE PAY ITEM, FOR INFORMATION ONLY

DRAINAGE QUANTITIES
DQ-3

STATE OF CALIFORNIA - DEPARTMENT OF TRANSPORTATION
Caltrans MAINTENANCE

FUNCTIONAL SUPERVISOR: RONALD S. SYKES
CALCULATED-DESIGNED BY: NIK BEACH
CHECKED BY: RONALD S. SYKES
REVISED BY
DATE REVISED

LAST REVISION 08-24-11
DATE PLOTTED => 15-NOV-2011
TIME PLOTTED => 08:22

Dist	COUNTY	ROUTE	POST MILES TOTAL PROJECT	SHEET No.	TOTAL SHEETS
03	ED	50	53.4/56.3	19	28

REGISTERED CIVIL ENGINEER 11-14-11 DATE

11-21-11
PLANS APPROVAL DATE

REGISTERED PROFESSIONAL ENGINEER RONALD S. SYKES No. 35526 Exp 9-30-13 CIVIL STATE OF CALIFORNIA

THE STATE OF CALIFORNIA OR ITS OFFICERS OR AGENTS SHALL NOT BE RESPONSIBLE FOR THE ACCURACY OR COMPLETENESS OF SCANNED COPIES OF THIS PLAN SHEET.

DRAINAGE QUANTITIES

DRAINAGE SYSTEM No. ⬡	DRAINAGE UNIT ○	18" ALTERNATIVE PIPELINER	48" ALTERNATIVE PIPELINER	18" CURED-IN-PLACE PIPELINER	24" CURED-IN-PLACE PIPELINER	CONCRETE INVERT PAVING	REMOVE FLARED END SECTION	REMOVE 18" CORRUGATED STEEL PIPE	REMOVE 24" CORRUGATED STEEL PIPE	REMOVE 48" CORRUGATED STEEL PIPE	18" CORRUGATED STEEL PIPE (.109" THICK)	48" CORRUGATED STEEL PIPE (.109" THICK)	RESET DOWNDRAIN	18" STEEL FLARED END SECTION	REMOVE INLET	MINOR CONCRETE (MINOR STRUCTURE)	MISCELLANEOUS IRON AND STEEL	ROCK SLOPE PROTECTION (LIGHT, METHOD B)	ROCK SLOPE PROTECTION FABRIC (CLASS 8)	PLACE HOT MIX ASPHALT (MISCELLANEOUS AREA)	MINOR HOT MIX ASPHALT	REMOVE MARKER (CULVERT)	MARKER (CULVERT)	(N) PIPE JOINT CLASSIFICATION	(N) HEIGHT OF INLET	(N) REMOVE TREE	(N) DISCONNECT DOWNDRAIN RECONNECT DOWNDRAIN	DESCRIPTION	DRAINAGE SHEET No.	DRAINAGE SYSTEM No. ⬡	DRAINAGE UNIT ○
		LF	LF	LF	LF	CY	EA	LF	LF	LF	LF	LF	EA	EA	EA	CY	LBS	TON	SQYD	SQYD	TON	EA	EA		LF	EA	EA				
21	a	48.0																				2	2					18" ALTERNATIVE PIPELINER	DP-12	21	a
22	a	85.6																				2	2					18" ALTERNATIVE PIPELINER		22	a
		133.6	0	0	0	0	0	0	0	0	0	0	0	0	0	0	0	0	0	0	0	4	4			0	0	SHEET DQ-4 TOTAL			
		383.7	0	94.2	159.9	0	2	0	2.0	0	0	0	0	2	0	0	0	25.0	44.7	20.6	0	18	18			1	0	SHEET DQ-1 TOTAL			
		310.3	81.2	104.6	119.3	0	2	12.0	0	6.0	12.0	6.0	3	3	0	0	0	0	0	30.9	6.0	10	10			0	3	SHEET DQ-2 TOTAL			
		380.7	0	0	0	5.6	1	3.0	0	0	7.0	0	1	1	1	2.5	263	17.7	32.1	10.3	2.0	12	12			0	1	SHEET DQ-3 TOTAL			
		1208.3	81.2	198.8	279.2	5.6	5	15.0	2.0	6.0	19.0	6.0	4	6	1	2.5	263	42.7	76.8	61.8	8.0	44	44			1	4	GRAND TOTAL			

(N) - NOT A SEPARATE PAY ITEM, FOR INFORMATION ONLY

EROSION CONTROL (TYPE 1)

LOCATION/ DESCRIPTION	EROSION CONTROL (DRY SEED)	MULCH	NOTES
	SQFT	CY	
Loc 5-PM 53.73	189	1.17	ADJACENT TO RSP CONSTRUCTION
Loc 8-PM 53.98	70	0.43	ADJACENT TO RSP CONSTRUCTION
Loc 11-PM 54.17	149	0.92	ADJACENT TO DOWN DRAIN
Loc 14-PM 54.41	225	1.39	ADJACENT TO DOWN DRAIN
Loc 15-PM 54.49	207	1.28	ADJACENT TO DOWN DRAIN
Loc 16-PM 54.57	70	0.43	ADJACENT TO RSP CONSTRUCTION
Loc 19-PM 55.89	70	0.43	ADJACENT TO RSP CONSTRUCTION AND CSP REPLACEMENT
Loc 20-PM 56.06	90	0.65	ADJACENT TO CSP REPLACEMENT
TOTAL	1070	6.70	

TEMPORARY FENCE

LOCATION/ DESCRIPTION	TEMPORARY FENCE (TYPE ESA)
	LF
PM 56.16 TO 56.19 Lt	154
TOTAL	154

DRAINAGE QUANTITIES
DQ-4

STATE OF CALIFORNIA - DEPARTMENT OF TRANSPORTATION
Caltrans MAINTENANCE

FUNCTIONAL SUPERVISOR: RONALD S. SYKES
CALCULATED-DESIGNED BY: NIK BEACH
CHECKED BY: RONALD S. SYKES
REVISED BY
DATE REVISED

LAST REVISION 08-29-11
DATE PLOTTED => 15-NOV-2011
TIME PLOTTED => 08:22

DIST	COUNTY	ROUTE	POST MILES TOTAL PROJECT	SHEET NO.	TOTAL SHEETS
03	ED	50	53.4/.56.3	20	28

Raymond Don Tsztoo
REGISTERED CIVIL ENGINEER

January 18, 2008
PLANS APPROVAL DATE

REGISTERED PROFESSIONAL ENGINEER
Raymond Don Tsztoo
No. C37332
Exp. 6-30-08
CIVIL
STATE OF CALIFORNIA

The State of California or its officers or agents shall not be responsible for the accuracy or completeness of electronic copies of this plan sheet.

To accompany plans dated 11-21-11

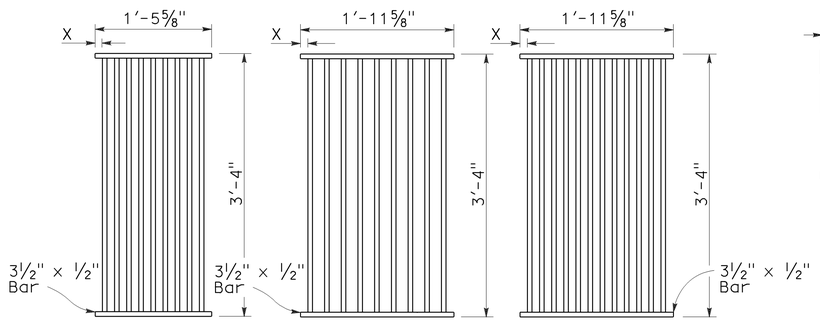

TYPE 18-9

1⅜" Clear spacing. Use within the roadbed on highways where bicycles and pedestrians are excluded.

TYPE 24-9

2" Clear spacing. Use in locations off the roadbed on all types of highways.

TYPE 24-12

1⅜" Clear spacing. Use within the roadbed on highways where bicycles and pedestrians are excluded.

RECTANGULAR GRATE DETAILS

(See table below)

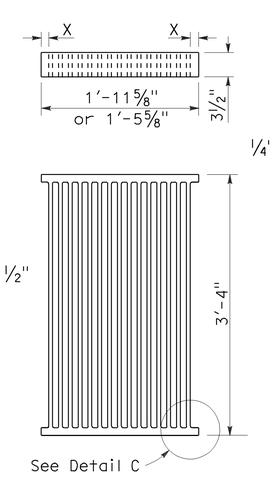

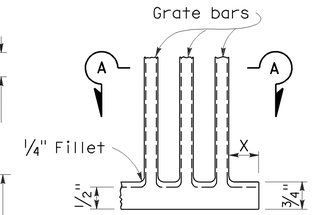

DETAIL C

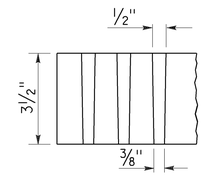

SECTION A-A

ALTERNATIVE CAST NODULAR IRON GRATE OR CAST STEEL GRATE

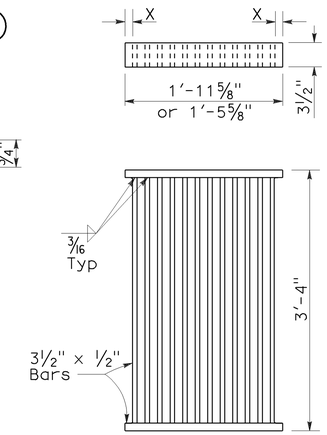

ALTERNATIVE WELDED GRATE

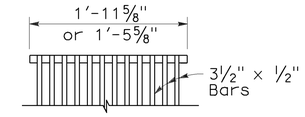

CAST END BLOCK

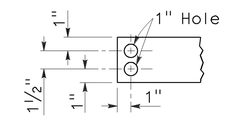

END OF BAR

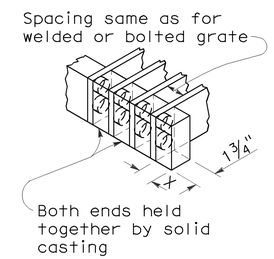

ALTERNATIVE CAST NODULAR IRON OR CAST STEEL END BLOCK GRATE

NOTES:

1. Grate type numbers refer to approximate width of grate in inches and number of bars, respectively.
2. Contractor has the option of using cast nodular iron, cast steel, welded, bolted, or cast end block grate.
3. See Special Provisions for requirements pertaining to galvanizing or asphalt dipping of grates and frames.
4. Rounded top of bars optional on all grates.
5. Pipe inlets with a grate shall be placed so that bars parallel direction of principle surface flow.
6. Full penetration butt welds may be substituted for the fillet welds on all anchors.
7. Standard square, hexagon, round or equivalent headed anchors may be substituted for the right angle hooks on the anchors shown on this plan.
8. Grate and frame weights are based on welded grates (weights of face angles, steps, protection bars, etc. are not included).

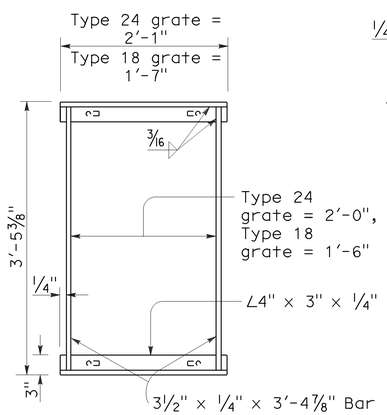

TYPICAL FRAME

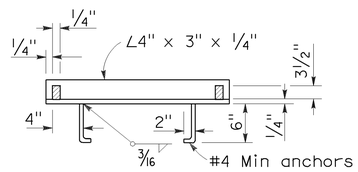

CROSS SECTION

(Thru frame)

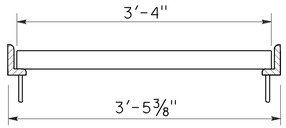

LONGITUDINAL SECTION

(Thru frame and grate)

RECTANGULAR FRAME DETAILS

(For all rectangular grates)

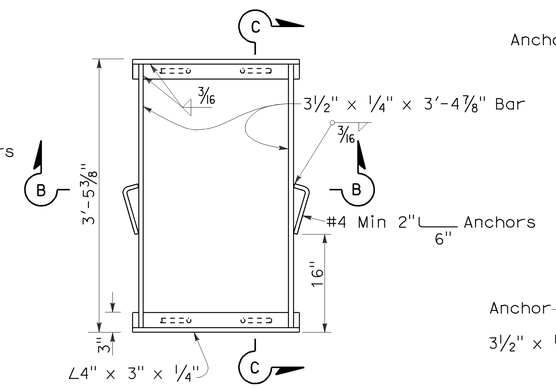

TYPICAL FRAME

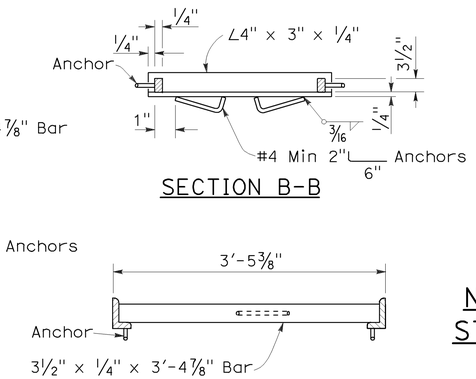

SECTION B-B

SECTION C-C

ALTERNATIVE ANCHOR FOR RECTANGULAR FRAME

(For details not shown, See Rectangular Frame Details)

INLET TYPE	GRATE TYPE	No. OF GRATES	WEIGHT LB
GDO	24-12	2	634
GOL-7	24-12	1	326
GOL-10	24-12	1	326
GO,G1,G2,G3,G4 (TYPE 24)	24-9	1	263
	24-12	1	326
G4 (TYPE 18),G5,G6	18-9	1	249
GT1	18-9	2	498
GT2	18-9	2	498
GT3	24-12	2	652
GT4	24-12	2	652
TRASH RACK			22

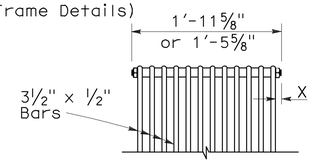

BOLTED END BLOCK

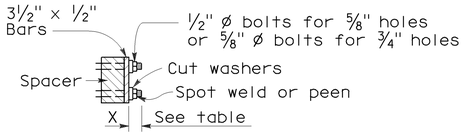

BOLTING DETAIL

ALTERNATIVE BOLTED GRATE

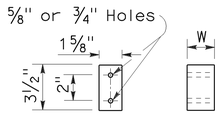

BAR SPACER

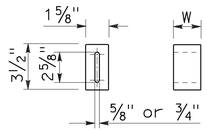

ALTERNATIVE SPACER

W = 1⅜" or 2"

GRATE BAR SPACING TABLE

TYPE	No. OF BARS	CLEAR BAR SPACING	X
18-9	9	1⅜"	1 1/16"
24-9	9	2"	1 9/16"
24-12	12	1⅜"	1¼"

INLET TYPE	COVER TYPE	WEIGHT LB
OS	PLATE	174
OL-7	PLATE	170
OL-10	PLATE	170
OL-14	PLATE	170
OL-21	PLATE	170
OCP	PLATE	112
OCPI	PLATE	112
OCPI	REDWOOD	42
OMP	PLATE	177
OMPI	PLATE	177

BASIS FOR MISC IRON & STEEL FINAL PAY WEIGHTS FOR DRAINAGE INLETS

(See General Notes, No 8)

STATE OF CALIFORNIA
DEPARTMENT OF TRANSPORTATION

GRATE DETAILS

NO SCALE

RSP D77A DATED JANUARY 18, 2008 SUPERSEDES STANDARD PLAN D77A
DATED MAY 1, 2006 - PAGE 155 OF THE STANDARD PLANS BOOK DATED MAY 2006.

REVISED STANDARD PLAN RSP D77A

2006 REVISED STANDARD PLAN RSP D77A

12-14-07

DIST	COUNTY	ROUTE	POST MILES TOTAL PROJECT	SHEET NO.	TOTAL SHEETS
03	ED	50	53.4/.56.3	21	28

Raymond Don Tsztoo
REGISTERED CIVIL ENGINEER

June 6, 2008
PLANS APPROVAL DATE

REGISTERED PROFESSIONAL ENGINEER
Raymond Don Tsztoo
No. C37332
Exp. 6-30-08
CIVIL
STATE OF CALIFORNIA

The State of California or its officers or agents shall not be responsible for the accuracy or completeness of electronic copies of this plan sheet.

To accompany plans dated 11-21-11

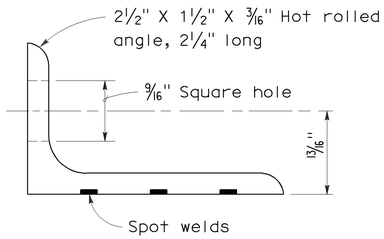

ANGLE

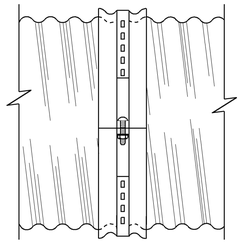

SIDE VIEW
ANGLE

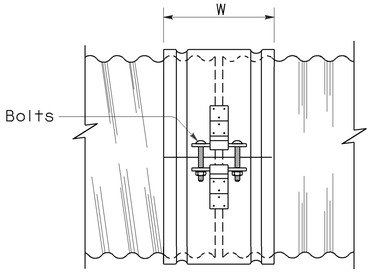

SIDE VIEW
SINGLE BAR AND STRAP

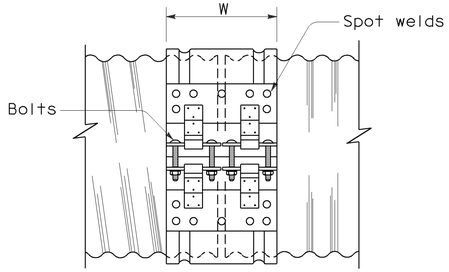

SIDE VIEW
DOUBLE BAR AND STRAP

NOTES:

1. All ferrous metal coupling band connection hardware shall be galvanized or electroplated in accordance with the Standard Specifications.
2. Dimensions and thicknesses shown are minimum.
3. Spot welds shall develop minimum required strength of strap.
4. Fillet welds of equivalent strength may be substituted for spot welds or rivets.
5. Dimension depends upon whether end condition is lips up or lips down.

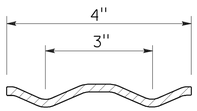

SECTION

H-4 HUGGER BAND

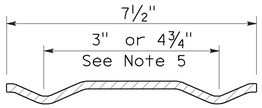

SECTION

H-7 HUGGER BAND

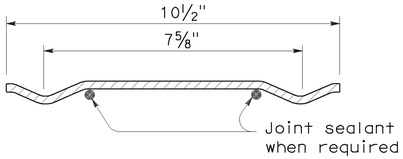

SECTION

H-10 HUGGER BAND

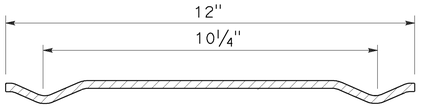

SECTION

H-12 HUGGER BAND

HUGGER COUPLING BANDS

STATE OF CALIFORNIA
DEPARTMENT OF TRANSPORTATION

CORRUGATED METAL PIPE COUPLING DETAILS No. 4 HUGGER COUPLING BANDS

NO SCALE

RSP D97D DATED JUNE 6, 2008 SUPERSEDES STANDARD PLAN D97D
DATED MAY 1, 2006 - PAGE 186 OF THE STANDARD PLANS BOOK DATED MAY 2006.

REVISED STANDARD PLAN RSP D97D

2006 REVISED STANDARD PLAN RSP D97D

3-24-08

DIST	COUNTY	ROUTE	POST MILES TOTAL PROJECT	SHEET NO.	TOTAL SHEETS
03	ED	50	53.4/.56.3	22	28

Raymond Don Tsztoo
REGISTERED CIVIL ENGINEER

June 6, 2008
PLANS APPROVAL DATE

REGISTERED PROFESSIONAL ENGINEER Raymond Don Tsztoo No. C37332 Exp. 6-30-08 CIVIL STATE OF CALIFORNIA

The State of California or its officers or agents shall not be responsible for the accuracy or completeness of electronic copies of this plan sheet.

2006 REVISED STANDARD PLAN RSP D97E

ANNULAR AND HELICAL PROFILE

COUPLING TYPE	PIPE CORRUGATION	PIPE SIZE	W OR A	PIPE WALL THICKNESS CSP	PIPE WALL THICKNESS CAP	BAND THICKNESS CSP	BAND THICKNESS CAP	BAR AND STRAP (CSP ONLY) STRAP THICKNESS	BOLTS Dia	BAR Dia	BAR YIELD STRENGTH	ANGLE DIMENSIONS CSP	ANGLE DIMENSIONS CAP	BOLTS (No.- Dia) CSP	BOLTS (No.- Dia) CAP	RIVETS ANGLE TO BAND CSP	RIVETS ANGLE TO BAND CAP	SPOT WELDS ANGLE TO BAND CSP
TWO PIECE INTEGRAL FLANGE	1½′ × ¼"	6"-10"	7"	0.052"-0.079"	0.048"-0.060"	0.052"	0.060"							2-⅜"	2-⅜"			
		12"-18"	7"	0.052"-0.079"		0.064"								2-½"				
	2⅔" × ½"	12"-24"	7"	0.052"-0.079"	0.060"-0.105"	0.064"	0.060"							2-½"	2-½"			
UNIVERSAL	2⅔" × ½"	THROUGH 36"	12"	0.052"-0.138"	0.060"-0.135"	0.052"	0.060"					2" × 2" × 3/16"	2" × 2" × 3/16"	3-½"	3-½"	3-⅜"	3-⅜"	3-½"
		42"-60"	12"	0.052"-0.168"	0.075"-0.164"	0.052"	0.060"					2" × 2" × 3/16"	2" × 2" × 3/16"	3-½"	3-½"	3-⅜"	3-⅜"	5-½"
		THROUGH 72"	12"	0.052"-0.168"	0.164"	0.052"	0.105"	0.079"	½"	⅞"	32 ksi	2" × 2" × 3/16"	2" × 2" × 3/16"	3-½"	3-½"	3-⅜"	3-⅜"	5-½"
		78"-84"	16¼"	0.168"		0.079"		DOUBLE 0.079"	½"	⅞"	32 ksi							
ANNULAR	2⅔" × ½"	THROUGH 36"	7"	0.064"-0.138"	0.060"-0.135"	0.052"	0.060"	0.079"	½"	⅞"	32 ksi	2" × 2" × 3/16"	2" × 2" × 3/16"	2-½"	2-½"	3-⅜"	3-⅜"	3-½"
		42"-72"	12"	0.064"-0.168"	0.075"-0.164"	0.052"	0.105"	0.079"	½"	⅞"	32 ksi	2" × 2" × 3/16"	2" × 2" × 3/16"	3-½"	3-½"	3-⅜"	3-⅜"	5-½"
		78"-84"	12"	0.168"		0.079"		0.109"	½"	⅞"	45 ksi	2" × 2" × 3/16"		3-½"		3-⅜"		5-½"
	3" × 1"	48"-90"	14"	0.064"-0.109"		0.052"		0.079"	½"	⅞"	32 ksi	2" × 2" × 3/16"		3-½"		3-⅜"		5-½"
		96"-120"	14"	0.079"-0.109"		0.052"		0.109"	½"	⅞"	45 ksi	2" × 2" × 3/16"		3-½"		4-⅜"		
		42"-108"	14"		0.060"-0.135"		0.060"						2" × 2" × 3/16"		3-½"		3-⅜"	
HELICAL	2⅔" × ½"	THROUGH 36"	12"	0.052"-0.138"	0.060"-0.135"	0.052"	0.060"	0.079"	½"	⅞"	32 ksi	2" × 2" × 3/16"	2" × 2" × 3/16"	3-½"	3-½"	3-⅜"	3-⅜"	3-½"
		42"-72"	12"	0.052"-0.168"	0.075"-0.164"	0.052"	0.060"	0.079"	½"	⅞"	32 ksi	2" × 2" × 3/16"	2" × 2" × 3/16"	3-½"	3-½"	3-⅜"	3-⅜"	5-½"
		78"-84"	12"	0.168"		0.079"		0.109"	½"	⅞"	45 ksi	2" × 2" × 3/16"		3-½"		3-⅜"		5-½"
	3" × 1"	48"-90"	14"	0.064"-0.109"		0.052"		0.079"	½"	⅞"	32 ksi	2" × 2" × 3/16"		3-½"		3-⅜"		5-½"
		96"-120"	14"	0.079"-0.109"		0.052"		0.109"	½"	⅞"	45 ksi	2" × 2" × 3/16"		3-½"		4-⅜"		
		42"-108"	14"		0.060"-0.135"		0.060"						2" × 2" × 3/16"		3-½"		3-⅜"	
HUGGER	2⅔" × ½" REROLLED END	12"-54"	4"	0.052"-0.109"		0.052"						2½" × 1½" × 3/16"	2½" × 1½" × 3/16"	1-½"				3-½"
		60"-66"	4"	0.109"		0.064"						2½" × 1½" × 3/16"	2½" × 1½" × 3/16"	1-½"				3-½"
		36"-48"	4"	0.138"		0.064"						2½" × 1½" × 3/16"	2½" × 1½" × 3/16"	1-½"				3-½"
		THROUGH 72"	10½"	0.052"-0.168"		0.052"		0.079"	½"	⅞"	32 ksi							
		78"-84"	10½"	0.168"		0.079"		0.109"	½"	⅞"	45 ksi							
	3" × 1" REROLLED END	48"-90"	10½"	0.064"-0.109"		0.052"		0.079"	½"	⅞"	32 ksi							
		96"-120"	10½"	0.079"-0.109"		0.052"		0.109"	½"	⅞"	45 ksi							
	5" × 1" REROLLED END	48"-66"	7½"	0.064"-0.109"		0.064"		0.079"	½"	⅞"	32 ksi	2½" × 1½" × 3/16"	2½" × 1½" × 3/16"	1-½"				3-½"
		72"-90"	7½"	0.064"-0.079"		0.064"		0.079"	½"	⅞"	32 ksi	2½" × 1½" × 3/16"	2½" × 1½" × 3/16"	1-½"				3-½"
		48"-90"	7½"	0.064"-0.138"		0.064"		0.079"	½"	⅞"	32 ksi							
		48"-120"	12" SEE	0.064"-0.109"		0.064"		0.079"	½"	⅞"	32 ksi							
		48"-84"	12" NOTE	0.138"		0.064"		0.079"	½"	⅞"	32 ksi							
		90"-120"	12" 11	0.138"		0.064"		DOUBLE 0.079"	½"	⅞"	32 ksi							

SPIRAL RIB PROFILE

COUPLING TYPE	PIPE CORRUGATION	PIPE SIZE	W	PIPE WALL THICKNESS SSRP	PIPE WALL THICKNESS ASRP	BAND THICKNESS SSRP	BAND THICKNESS ASRP	BAR AND STRAP (SSRP ONLY) STRAP THICKNESS	BOLTS Dia	BAR Dia	BAR YIELD STRENGTH	ANGLE DIMENSIONS SSRP	ANGLE DIMENSIONS ASRP	BOLTS (No.- Dia) SSRP	BOLTS (No.- Dia) ASRP	RIVETS ANGLE TO BAND SSRP	RIVETS ANGLE TO BAND ASRP	SPOT WELDS ANGLE TO BAND SSRP
ANNULAR	2⅔" × ½" * REROLLED END	24"-36"	12"	0.064"-0.109"	0.060"-0.105"	0.052"	0.060"	0.079"	½"	⅞"	32 ksi	2" × 2" × 3/16"	2" × 2" × 3/16"	3-½"	3-½"	3-⅜"	3-⅜"	5-½"
		42"-60"	12"	0.064"-0.109"	0.075"-0.105"	0.052"	0.105"	0.079"	½"	⅞"	32 ksi	2" × 2" × 3/16"	2" × 2" × 3/16"	3-½"	3-½"	3-⅜"	3-⅜"	5-½"
		66"-72"	12"	0.064"-0.109"		0.052"		0.079"	½"	⅞"	32 ksi	2" × 2" × 3/16"	2" × 2" × 3/16"	3-½"	3-½"	3-⅜"	3-⅜"	5-½"
		78"-114"	12"	0.079"-0.109"		0.079"		0.109"	½"	⅞"	45 ksi	2" × 2" × 3/16"	2" × 2" × 3/16"	3-½"	3-½"	3-⅜"	3-⅜"	5-½"
HUGGER	2⅔" × ½" * REROLLED END	24"-72"	10½"	0.064"-0.109"		0.052"		0.079"	½"	⅞"	32 ksi							
		78"-84"	10½"	0.109"		0.079"		0.109"	½"	⅞"	45 ksi							

* See Note 14.

14. All profiles of Spiral Rib Pipe (¾" × ¾" ribs at 7½" pitch and ¾" × 1" ribs at 11½" pitch in both steel and aluminum and ¾" × 1" ribs at 8½" pitch in steel only) shall be manufactured with rerolled ends. Corrugation profile of the rerolled ends shall be 2⅔" × ½" annual corrugations with a minimum of two full corrugations at each end.

NOTES:

To accompany plans dated 11-21-11

1. All ferrous metal coupling band connection hardware shall be galvanized or electroplated in accordance with the Standard Specifications.
2. For helically corrugated coupling bands, the connection angles may be oriented parallel to the pipe axis, provided connecting holes are slotted lengthwise sufficiently to allow adjustment for the helix angle.
3. Tension strap may be connected to band with either spot welds or fillet welds that develop minimum required strength of strap.
4. Use 1¼" gage line dimension on attached angle leg for rivets and spot welds.
5. Band thickness shall not be less than:
   a. 3 standard thicknesses lighter than the thickness of the pipe for Corrugated Steel Pipe.
   b. 2 standard thicknesses lighter than the thickness of the pipe and in no case lighter than 0.060" for Corrugated Aluminum Pipe.
6. Dimensions, thicknesses and strengths shown are minimum.
7. For pipe arches use same width band as for round pipe of equal periphery.
8. Fillet welds of equivalent strenght may be substituted for spot welds or rivets.
9. Spot welds shall develop minimum required strength of strap.
10. Pipe with rerolled ends having at least two 2⅔" × ½" annular corrugations at each end with or without an upturned flange may be connected with any of the annular coupling bands shown for pipe of the same diameter and wall thickness and having 2⅔" × ½" corrugations.
11. In the case of H-12 huggerbands, two piece bands are required for diameters through 96" and three piece bands are required for diameters 102" through 120".
12. Two piece bands are required for pipes greater than 42" diameter.
13. The 2¼" × 2" × 0.109" thick galvanized die-formed angle connector may be used in lieu of the 2" × 2" × 3/16" angle connector for standard joints only on pipes through 72" diameter.

STATE OF CALIFORNIA
DEPARTMENT OF TRANSPORTATION

CORRUGATED METAL PIPE COUPLING DETAILS No. 5 STANDARD JOINT

NO SCALE

RSP D97E DATED JUNE 6, 2008 SUPERSEDES STANDARD PLAN D97E DATED MAY 1, 2006 - PAGE 187 OF THE STANDARD PLANS BOOK DATED MAY 2006.

REVISED STANDARD PLAN RSP D97E

4-2-08

DIST	COUNTY	ROUTE	POST MILES TOTAL PROJECT	SHEET NO.	TOTAL SHEETS
03	ED	50	53.4/.56.3	23	28

Raymond Don Tsztoo
REGISTERED CIVIL ENGINEER

June 6, 2008
PLANS APPROVAL DATE

REGISTERED PROFESSIONAL ENGINEER
Raymond Don Tsztoo
No. C37332
Exp. 6-30-08
CIVIL
STATE OF CALIFORNIA

The State of California or its officers or agents shall not be responsible for the accuracy or completeness of electronic copies of this plan sheet.

To accompany plans dated 11-21-11

ANNULAR AND HELICAL PROFILE

COUPLING TYPE	PIPE CORRUGATION	PIPE SIZE	W OR A	PIPE WALL THICKNESS		BAND THICKNESS		BAR AND STRAP (CSP ONLY)			ANGLE						
											DIMENSIONS		BOLTS (No.- Dia)		RIVETS ANGLE TO BAND		SPOT WELDS ANGLE TO BAND
				CSP	CAP	CSP	CAP	STRAP THICKNESS	BOLTS Dia	BAR Dia	CSP	CAP	CSP	CAP	CSP	CAP	CSP
TWO PIECE INTEGRAL FLANGE	1½′ × ¼″	6″	7″	0.064″-0.168″		0.052″							3-⅜″				
	1½′ × ¼″	8″-10″	7″	0.064″-0.168″	0.060″-0.164″	0.064″	0.060″						3-⅜″	3-⅜″			
ANNULAR	2⅔″ × ½″	THROUGH 24″	12″	0.064″-0.168″	0.060″-0.164″	0.064″	0.060″				2″ × 2″ × 3⁄16″	2″ × 2″ × 3⁄16″	3-½″	3-½″	3-⅜″	3-⅜″	3-½″
HUGGER	2⅔″ × ½″ REROLLED END	THROUGH 24″	10½″	0.064″-0.168″		0.064″		0.079″	½″	⅞″							

SPIRAL RIB PROFILE

COUPLING TYPE	PIPE CORRUGATION	PIPE SIZE	W	PIPE WALL THICKNESS		BAND THICKNESS		BAR AND STRAP (SSRP ONLY)			ANGLE						
											DIMENSIONS		BOLTS (No.- Dia)		RIVETS ANGLE TO BAND		SPOT WELDS ANGLE TO BAND
				SSRP	ASRP	SSRP	ASRP	STRAP THICKNESS	BOLTS Dia	BAR Dia	SSRP	ASRP	SSRP	ASRP	SSRP	ASRP	SSRP
ANNULAR	2⅔″ × ½″ * REROLLED END	24″	12″	0.064″-0.168″	0.060″-0.164″	0.064″	0.060″				2″ × 2″ × 3⁄16″	2″ × 2″ × 3⁄16″	3-½″	3-½″	3-⅜″	3-⅜″	3-½″
HUGGER	2⅔″ × ½″ * REROLLED END	24″	10½″	0.064″-0.168″		0.064″		0.079″	½″	⅞″							

* See Note 12.

NOTES:

1. All ferrous metal coupling band connection hardware shall be galvanized or electro-plated in accordance with the Standard Specifications.
2. For helically corrugated coupling bands, the connection angles may be oriented parallel to the pipe axis, provided connecting holes are slotted lengthwise sufficiently to allow adjustment for the helix angle.
3. Tension strap may be connected to band with either spot welds or fillet welds that develop minimum required strength of strap.
4. Use 1¼″ gage line dimension on attached angle leg for rivets and spot welds.
5. Band thickness shall not be less than:
   a. 3 standard thicknesses lighter than the thickness of the pipe for Corrugated Steel Pipe.
   b. 2 standard thicknesses lighter than the thickness of the pipe and in no case lighter than 0.060″ for Corrugated Aluminum Pipe.
6. Dimensions, thicknesses and strengths shown are minimum.
7. For pipe arches use same width band as for round pipe of equal periphery.
8. Fillet welds of equivalent strenght may be substituted for spot welds or rivets.
9. Spot welds shall develop minimum required strength of strap.
10. Pipe with rerolled ends having at least two 2⅔″ × ½″ annular corrugations at each end with or without an upturned flange may be connected with any of the annular coupling bands shown for pipe of the same diameter and wall thickness and having 2⅔″ × ½″ corrugations.
11. For downdrain applications, two piece integral flange couplers shall have factory applied sleeve type rubber gaskets with a minimum length of 7″ measured along the length of the pipe.
12. All profiles of Spiral Rib Pipe (¾″ × ¾″ ribs at 7½″ pitch and ¾″ × 1″ ribs at 11½″ pitch in both steel and aluminum and ¾″ × 1″ ribs at 8½″ pitch in steel only) shall be manufactured with rerolled ends. Corrugation profile of the rerolled ends shall be 2⅔″ × ½″ annual corrugations with a minimum of two full corrugations at each end.

STATE OF CALIFORNIA
DEPARTMENT OF TRANSPORTATION

CORRUGATED METAL PIPE COUPLING DETAILS No. 7 DOWNDRAIN

NO SCALE

RSP D97G DATED JUNE 6, 2008 SUPERSEDES STANDARD PLAN D97G
DATED MAY 1, 2006 - PAGE 189 OF THE STANDARD PLANS BOOK DATED MAY 2006.

REVISED STANDARD PLAN RSP D97G

2006 REVISED STANDARD PLAN RSP D97G

4-4-08

DIST	COUNTY	ROUTE	POST MILES TOTAL PROJECT	SHEET NO.	TOTAL SHEETS
03	ED	50	53.4/.56.3	24	28

Randell D. Hiatt
REGISTERED CIVIL ENGINEER

June 6, 2008
PLANS APPROVAL DATE

REGISTERED PROFESSIONAL ENGINEER
Randell D. Hiatt
No. C50200
Exp. 6-30-09
CIVIL
STATE OF CALIFORNIA

The State of California or its officers or agents shall not be responsible for the accuracy or completeness of electronic copies of this plan sheet.

To accompany plans dated 11-21-11

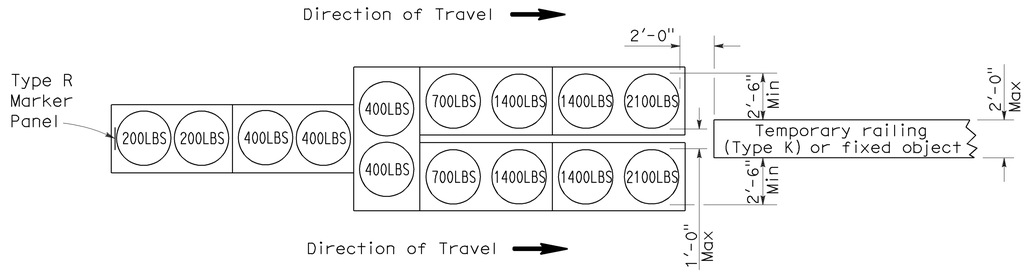

ARRAY 'TU14'

Approach speed 45 mph or more

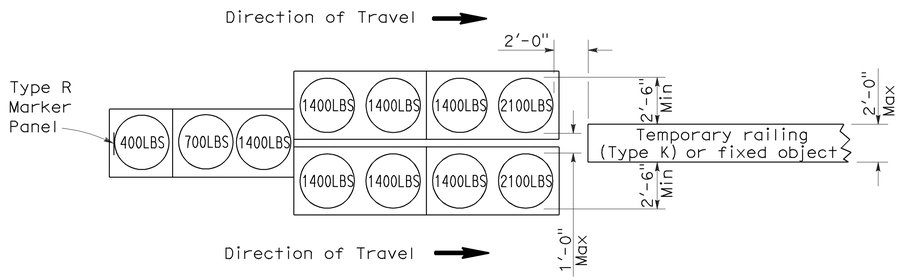

ARRAY 'TU11'

Approach speed less than 45 mph

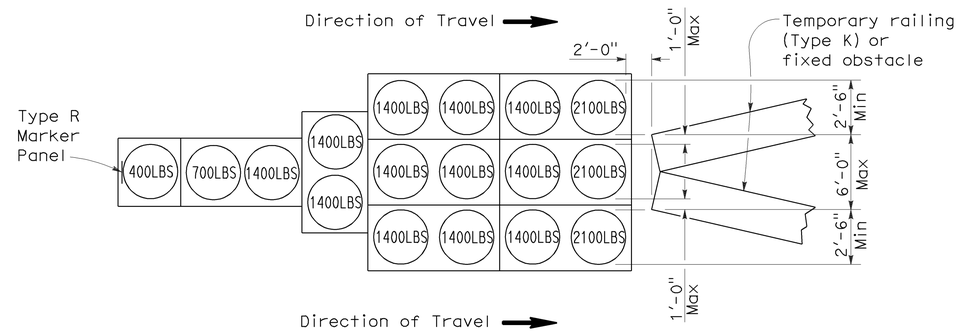

ARRAY 'TU17'

Approach speed less than 45 mph

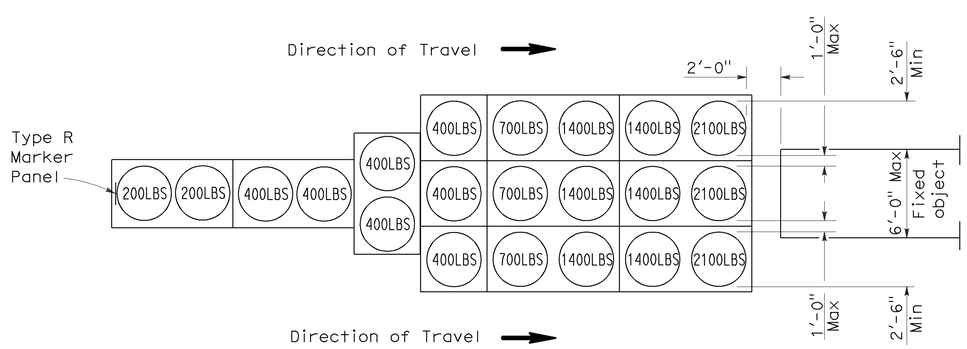

ARRAY 'TU21'

Approach speed 45 mph or more

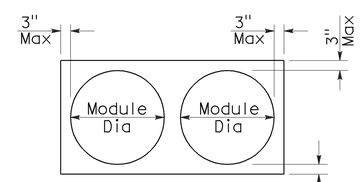

PLAN

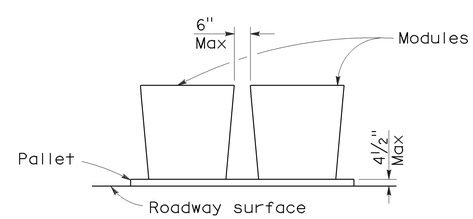

ELEVATION

CRASH CUSHION PALLET DETAIL

See Note 7

NOTES:

1. (XXX) Indicates sand filled module location and weight of sand in pounds for each module. Module spacing is based on the greater diameter of the module.
2. All sand weights are nominal.
3. Temporary crash cushion arrays shall not encroach on the traveled way.
4. Place the top of Type R marker panel 1" below the module lid.
5. Refer to Standard Plan A73B for marker details.
6. Approach speeds indicated conform to NCHRP 350 Report criteria.
7. Use of pallets is optional.

STATE OF CALIFORNIA
DEPARTMENT OF TRANSPORTATION

TEMPORARY CRASH CUSHION, SAND FILLED (UNIDIRECTIONAL)

NO SCALE

RSP T1A DATED JUNE 6, 2008 SUPERSEDES STANDARD PLAN T1A
DATED MAY 1, 2006 - PAGE 211 OF THE STANDARD PLANS BOOK DATED MAY 2006.

REVISED STANDARD PLAN RSP T1A

2006 REVISED STANDARD PLAN RSP T1A

DIST	COUNTY	ROUTE	POST MILES TOTAL PROJECT	SHEET NO.	TOTAL SHEETS
03	ED	50	53.4/.56.3	25	28

Randell D. Hiatt
REGISTERED CIVIL ENGINEER

June 6, 2008
PLANS APPROVAL DATE

REGISTERED PROFESSIONAL ENGINEER
Randell D. Hiatt
No. C50200
Exp. 6-30-09
CIVIL
STATE OF CALIFORNIA

The State of California or its officers or agents shall not be responsible for the accuracy or completeness of electronic copies of this plan sheet.

To accompany plans dated 11-21-11

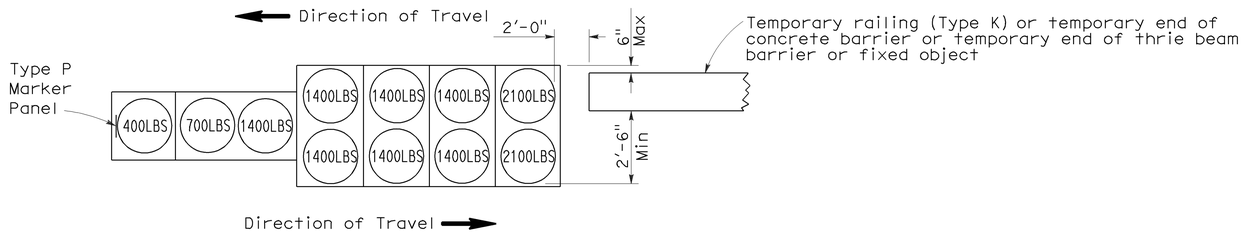

ARRAY 'TB11'

Approach speed less than 45 mph

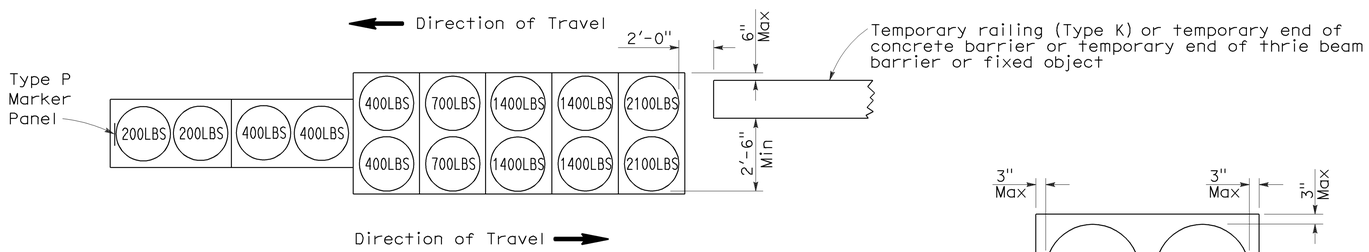

ARRAY 'TB14'

Approach speed 45 mph or more

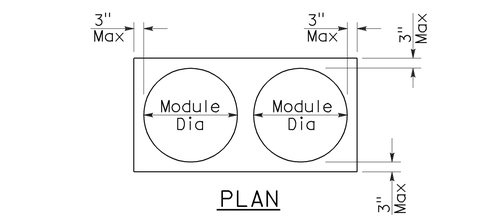

PLAN

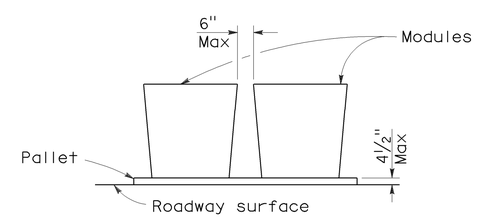

ELEVATION

CRASH CUSHION PALLET DETAIL

See Note 7

NOTES:

1. (XXX) Indicates sand filled module location and weight of sand in pounds for each module. Module spacing is based on the greater diameter of the module.
2. All sand weights are nominal.
3. Temporary crash cushion arrays shall not encroach on the traveled way.
4. Place the Type P marker panel so that the bottom of the panel rests upon the pallet.
5. Refer to Standard Plan A73B for marker details.
6. Approach speeds indicated conform to NCHRP 350 Report criteria.
7. Use of pallets is optional.

STATE OF CALIFORNIA
DEPARTMENT OF TRANSPORTATION

TEMPORARY CRASH CUSHION, SAND FILLED (BIDIRECTIONAL)

NO SCALE

RSP T1B DATED JUNE 6, 2008 SUPERSEDES STANDARD PLAN T1B
DATED MAY 1, 2006 - PAGE 212 OF THE STANDARD PLANS BOOK DATED MAY 2006.

REVISED STANDARD PLAN RSP T1B

2006 REVISED STANDARD PLAN RSP T1B

5-15-08

DIST	COUNTY	ROUTE	POST MILES TOTAL PROJECT	SHEET NO.	TOTAL SHEETS
03	ED	50	53.4/.56.3	26	28

Randell D. Hiatt
REGISTERED CIVIL ENGINEER

June 6, 2008
PLANS APPROVAL DATE

REGISTERED PROFESSIONAL ENGINEER
Randell D. Hiatt
No. C50200
Exp. 6-30-09
CIVIL
STATE OF CALIFORNIA

The State of California or its officers or agents shall not be responsible for the accuracy or completeness of electronic copies of this plan sheet.

To accompany plans dated 11-21-11

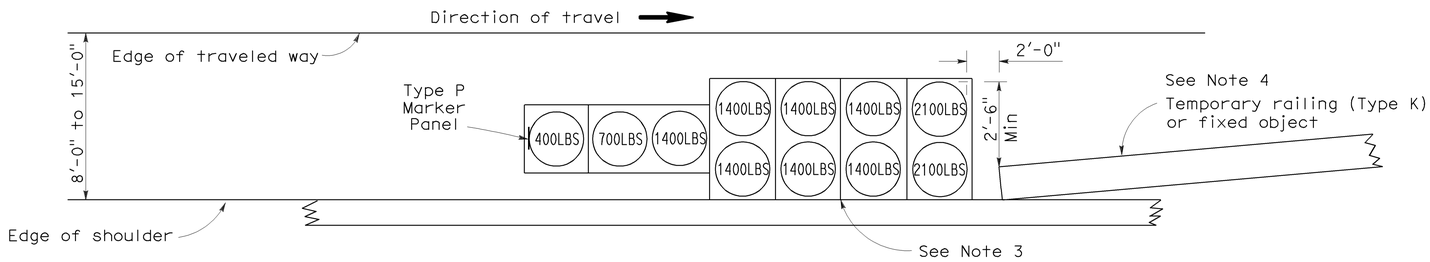

ARRAY 'TS11'

Approach speed less than 45 mph
See Note 9

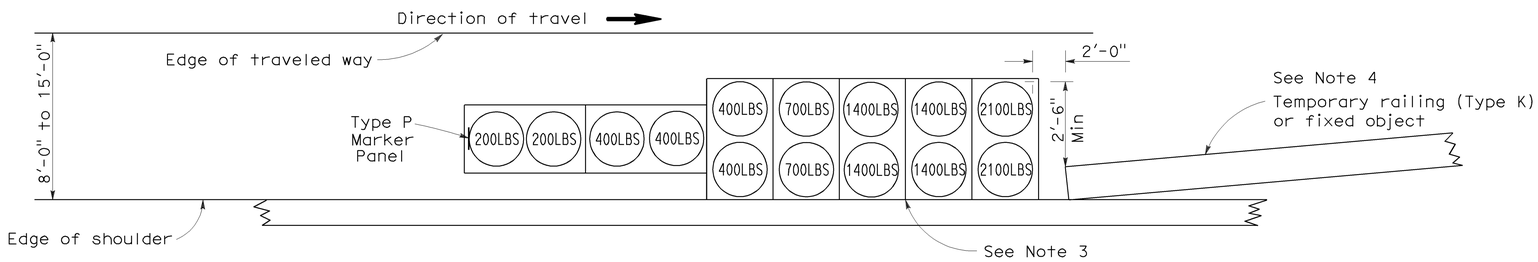

ARRAY 'TS14'

Approach speed 45 mph or more
See Note 9

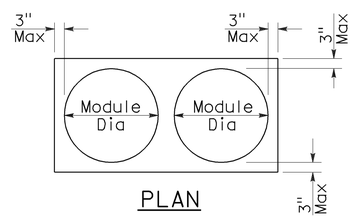

PLAN

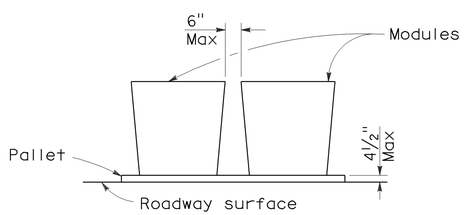

ELEVATION

CRASH CUSHION PALLET DETAIL

See Note 11

NOTES:

1. (XXX) Indicates sand filled module location and weight of sand in pounds for each module. Module spacing is based on the greater diameter of the module.
2. All sand weights are nominal.
3. The temporary crash cushion arrays shown on this plan shall be used only in locations where there will be traffic on one side of the temporary crash cushion array.
4. If the fixed object or approach end of the temporary railing is less than 15'-0" from the edge of traveled way, a temporary crash cushion is required in a construction or work zone.
5. Temporary crash cushion arrays shall not encroach on the traveled way.
6. Arrays for median shoulders shall conform to details shown on this plan for outside shoulders.
7. Place the Type P marker panel so that the bottom of the panel rests upon the pallet and faces traffic.
8. Refer to Standard Plan A73B for marker details.
9. For shoulder widths less than 8'-0", appropriate approved crash cushion protection, other than sand filled modules, shall be provided at fixed objects and at approach ends of temporary railing. The specific type of crash cushion shall be as shown on the project plans or as specified in the Special Provisions, or if not shown on the project plans or specified in the Special Provisions, shall be as approved by the Engineer.
10. Approach speeds indicated conform to NCHRP 350 Report criteria.
11. Use of pallets is optional.

STATE OF CALIFORNIA
DEPARTMENT OF TRANSPORTATION

TEMPORARY CRASH CUSHION, SAND FILLED (SHOULDER INSTALLATIONS)

NO SCALE

RSP T2 DATED JUNE 6, 2008 SUPERSEDES STANDARD PLAN T2
DATED MAY 1, 2006 - PAGE 213 OF THE STANDARD PLANS BOOK DATED MAY 2006.

REVISED STANDARD PLAN RSP T2

2006 REVISED STANDARD PLAN RSP T2

5-15-08

Dist	COUNTY	ROUTE	POST MILES TOTAL PROJECT	SHEET No.	TOTAL SHEETS
03	ED	50	53.4/.56.3	27	28

Randell D. Hiatt
REGISTERED CIVIL ENGINEER

May 20, 2011
PLANS APPROVAL DATE

REGISTERED PROFESSIONAL ENGINEER
Randell D. Hiatt
No. C50200
Exp. 6-30-11
CIVIL
STATE OF CALIFORNIA

The State of California or its officers or agents shall not be responsible for the accuracy or completeness of electronic copies of this plan sheet.

To accompany plans dated 11-21-11

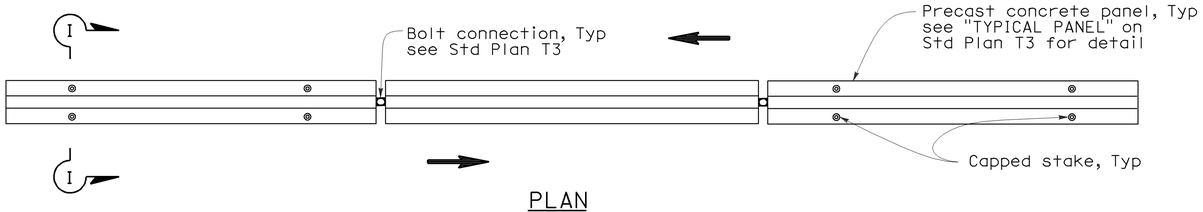

PLAN

RAILING STAKING CONFIGURATION FOR TWO-WAY TRAFFIC

See Note 1

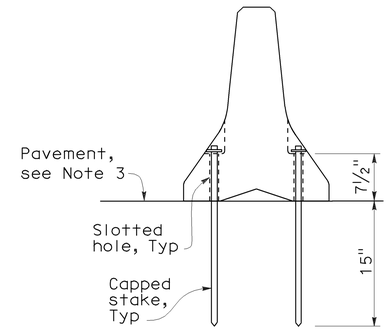

SECTION I-I

NOTES:

1. Where Type K Temporary Railing is placed as a temporary or long term barrier in two-way traffic on highways with less than 24" from the edge of traveled way, use four capped stakes per every other panel with end panels staked.
2. Where Type K Temporary Railing is placed 3" to 24" from the edge of an excavation on highways, use two capped stakes per panel along the traffic side.
3. Staked Type K Temporary Railing must be supported by at least 4" thick concrete, hot mix asphalt or existing asphalt concrete pavement.
4. The minimum yield strength for the washer must be 60,000 psi.
5. Direction of adjacent traffic indicated by ⟹.

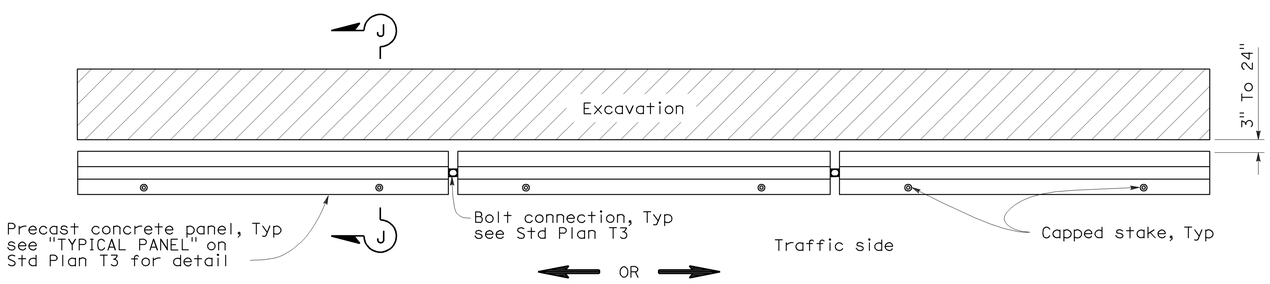

PLAN

RAILING STAKING CONFIGURATION ADJACENT TO AN EXCAVATION

See Note 2

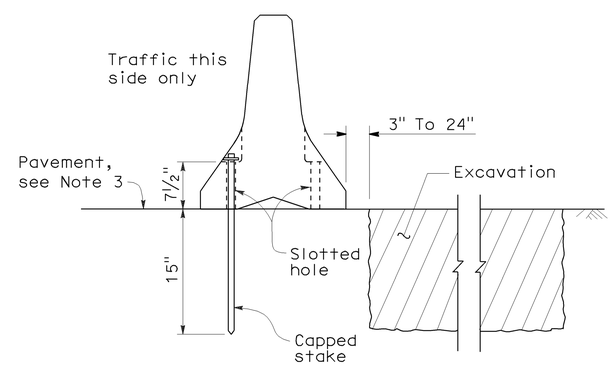

SECTION J-J

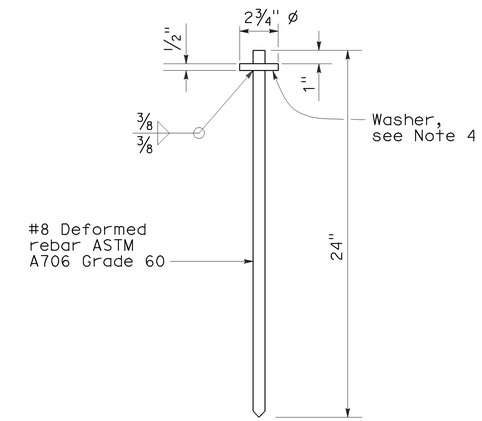

CAPPED STAKE DETAIL

STATE OF CALIFORNIA
DEPARTMENT OF TRANSPORTATION

TEMPORARY RAILING (TYPE K)

NO SCALE

NSP T3A DATED MAY 20, 2011 SUPPLEMENTS
THE STANDARD PLANS BOOK DATED MAY 2006.

NEW STANDARD PLAN NSP T3A

2006 NEW STANDARD PLAN NSP T3A

DIST	COUNTY	ROUTE	POST MILES TOTAL PROJECT	SHEET NO.	TOTAL SHEETS
03	ED	50	53.4/.56.3	28	28

LICENSED LANDSCAPE ARCHITECT

April 3, 2009
PLANS APPROVAL DATE

The State of California or its officers or agents shall not be responsible for the accuracy or completeness of electronic copies of this plan sheet.

LICENSED LANDSCAPE ARCHITECT — Robert B. Schott 3635 — Signature — 11-30-10 Renewal date — 2-25-09 Date — STATE OF CALIFORNIA

To accompany plans dated 11-21-11

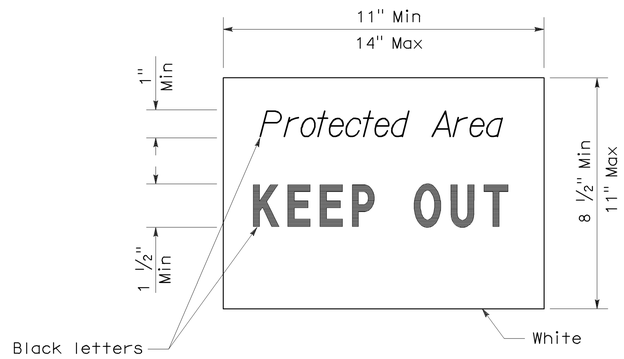

SIGN DETAIL

NOTE:

1. Temporary silt fence and temporary straw bale barrier shown for reference purposes only.

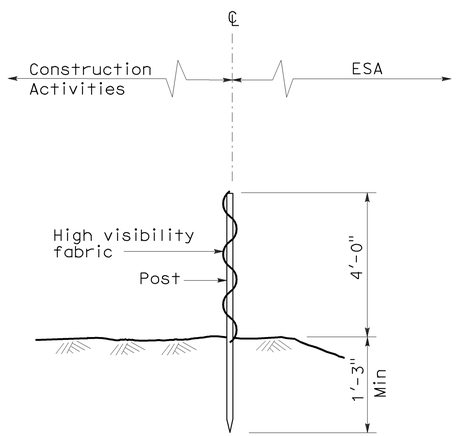

SECTION
TEMPORARY FENCE (TYPE ESA)

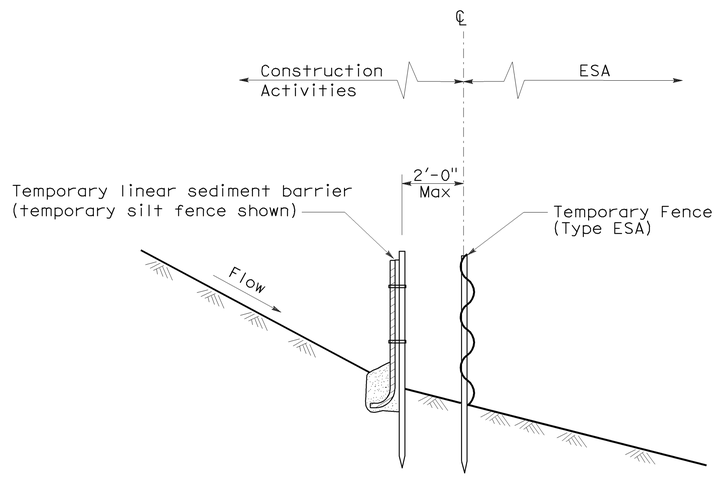

SECTION
PLACEMENT DETAIL
FOR TEMPORARY LINEAR SEDIMENT BARRIER
USED WITH TEMPORARY
FENCE (TYPE ESA)
(See Note 1)

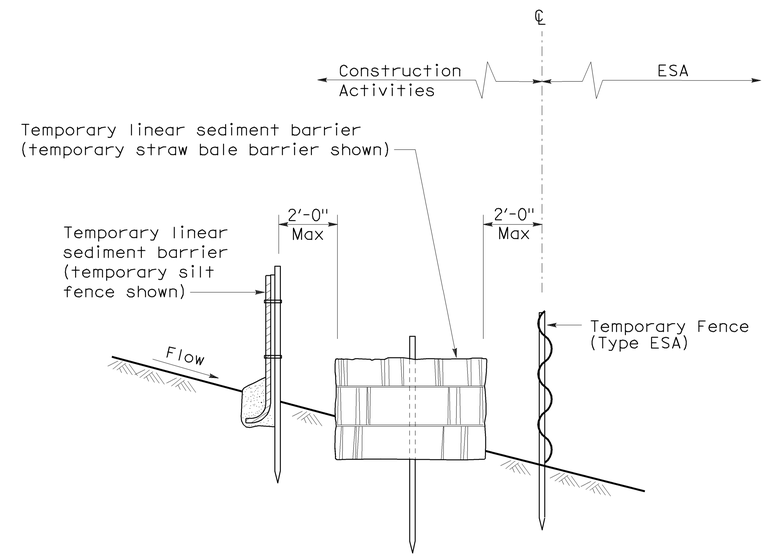

SECTION
PLACEMENT DETAIL
FOR TEMPORARY SILT FENCE
AND TEMPORARY STRAW BALE BARRIER
USED WITH TEMPORARY FENCE (TYPE ESA)
(See Note 1)

STATE OF CALIFORNIA
DEPARTMENT OF TRANSPORTATION

TEMPORARY WATER POLLUTION CONTROL DETAILS [TEMPORARY FENCE (TYPE ESA)]

NO SCALE

NSP T65 DATED APRIL 3, 2009 SUPPLEMENTS
THE STANDARD PLANS BOOK DATED MAY 2006.

NEW STANDARD PLAN NSP T65

2006 NEW STANDARD PLAN NSP T65