Dist	COUNTY	ROUTE	POST MILES TOTAL PROJECT	SHEET No.	TOTAL SHEETS
03	Sac	160	L7.0	1	61

ACBHNH-P160(024)E

STATE OF CALIFORNIA
DEPARTMENT OF TRANSPORTATION

PROJECT PLANS FOR CONSTRUCTION ON
STATE HIGHWAY
IN SACRAMENTO COUNTY
AT
THREE MILE SLOUGH BRIDGE

TO BE SUPPLEMENTED BY STANDARD PLANS DATED 2010

INDEX OF PLANS

SHEET No.	DESCRIPTION
1	TITLE AND LOCATION MAP
2	CONSTRUCTION AREA SIGNS
3-6	STAGE CONSTRUCTION
7-8	STAGE CONSTRUCTION DETAILS
9-14	TRAFFIC HANDLING PLANS
15-16	TRAFFIC HANDLING QUANTITIES
17-18	PAVEMENT DELINEATION PLAN, DETAILS AND QUANTITIES
19	SUMMARY OF QUANTITIES
20-26	ELECTRICAL PLANS
27-35	SPECIAL ELECTRICAL STRUCTURES
36-50	REVISED STANDARD PLANS

STRUCTURE PLANS

51-61	THREE MILE SLOUGH BRIDGE, Br No. 24-0121

THE STANDARD PLANS LIST APPLICABLE TO THIS CONTRACT IS INCLUDED IN THE NOTICE TO BIDDERS AND SPECIAL PROVISIONS BOOK.

LOCATION MAP

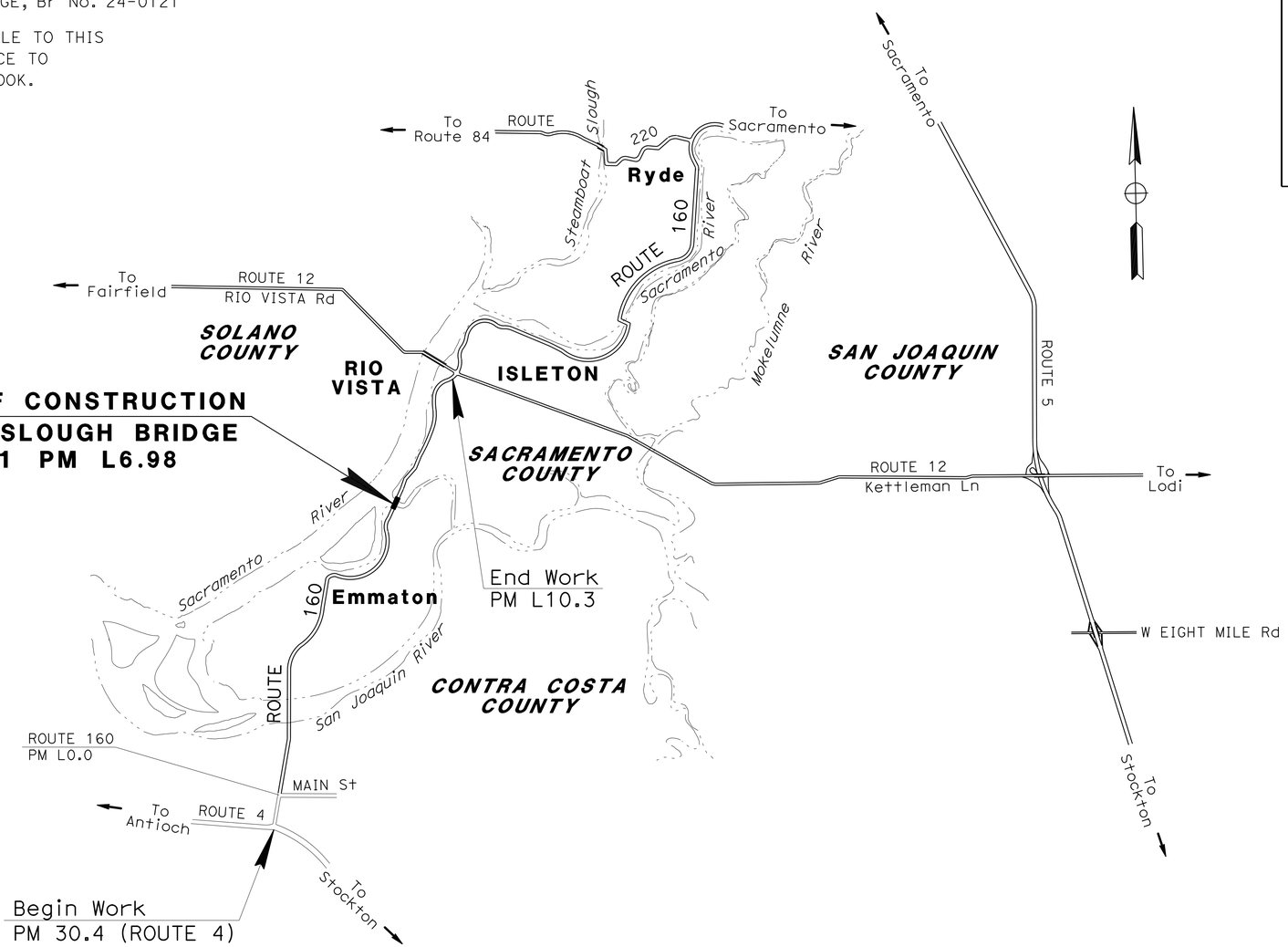

M. A. Panchesson 11-17-14
PROJECT ENGINEER DATE
REGISTERED CIVIL ENGINEER

November 17, 2014
PLANS APPROVAL DATE

REGISTERED PROFESSIONAL ENGINEER
M.A. PANCHESSON
No. C44125
Exp. 6-30-15
CIVIL
STATE OF CALIFORNIA

THE STATE OF CALIFORNIA OR ITS OFFICERS OR AGENTS SHALL NOT BE RESPONSIBLE FOR THE ACCURACY OR COMPLETENESS OF SCANNED COPIES OF THIS PLAN SHEET.

PROJECT MANAGER: JESS AVILA
DESIGN MANAGER: ALI KIANI

THE CONTRACTOR SHALL POSSESS THE CLASS (OR CLASSES) OF LICENSE AS SPECIFIED IN THE "NOTICE TO BIDDERS."

NO SCALE

CONTRACT No.	03-3F3404
PROJECT ID	0312000219

LAST REVISION 00-00-00
DATE PLOTTED => 22-DEC-2014
TIME PLOTTED => 1341

Dist	COUNTY	ROUTE	POST MILES TOTAL PROJECT	SHEET No.	TOTAL SHEETS
03	Sac	160	L7.0	2	61

Kris M. Albers 11-17-14
REGISTERED CIVIL ENGINEER DATE

11-17-14
PLANS APPROVAL DATE

REGISTERED PROFESSIONAL ENGINEER
KRIS M. ALBERS
No. 49986
Exp. 6-30-15
CIVIL
STATE OF CALIFORNIA

THE STATE OF CALIFORNIA OR ITS OFFICERS OR AGENTS SHALL NOT BE RESPONSIBLE FOR THE ACCURACY OR COMPLETENESS OF SCANNED COPIES OF THIS PLAN SHEET.

STATIONARY MOUNTED CONSTRUCTION AREA SIGNS

SIGN LETTER	SIGN CODE	PANEL SIZE	SIGN MESSAGE	NUMBER OF POST AND SIZE	NUMBER OF SIGNS
A	W20-1	48" x 48"	ROAD WORK AHEAD	1 - 6" x 6"	3
B	C40(Mod)<CA>	48" x 36"	TRAFFIC FINES DOUBLED IN WORK ZONES	1 - 4" x 6"	2
C	G20-2	36" x 18"	END ROAD WORK	1 - 4" x 4"	2

NOTES:

1. EXACT SIGN LOCATION TO BE DETERMINED BY THE ENGINEER.
2. ALL SIGN CODES SHOWN ARE FEDERAL SIGN CODES UNLESS OTHERWISE DESIGNATED AS CALIFORNIA SIGN CODES.
3. <CA> = CALIFORNIA SIGN CODE.
4. FOR ADDITIONAL CONSTRUCTION AREA SIGNS, SEE TRAFFIC HANDLING PLANS.

LEGEND

(X) CONSTRUCTION AREA SIGN LETTER

SIGN DETAIL

(B) C40(Mod)<CA>

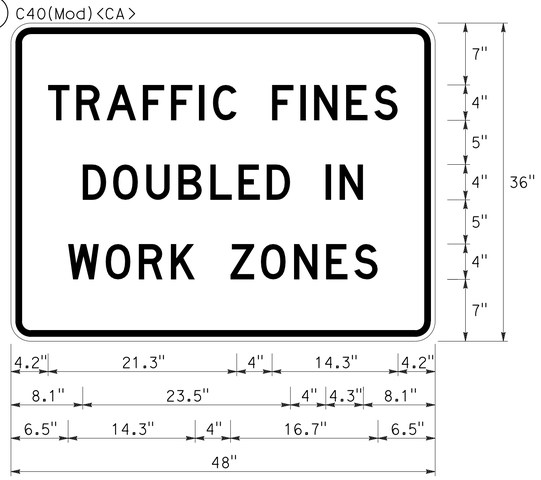

¾" BORDER WITH 2¼" RADIUS and ½" INDENT

RETROREFLECTIVE WHITE BACKGROUND WITH BLACK LEGEND AND BORDER

"TRAFFIC FINES" D
"DOUBLED IN" D
"WORK ZONES" D

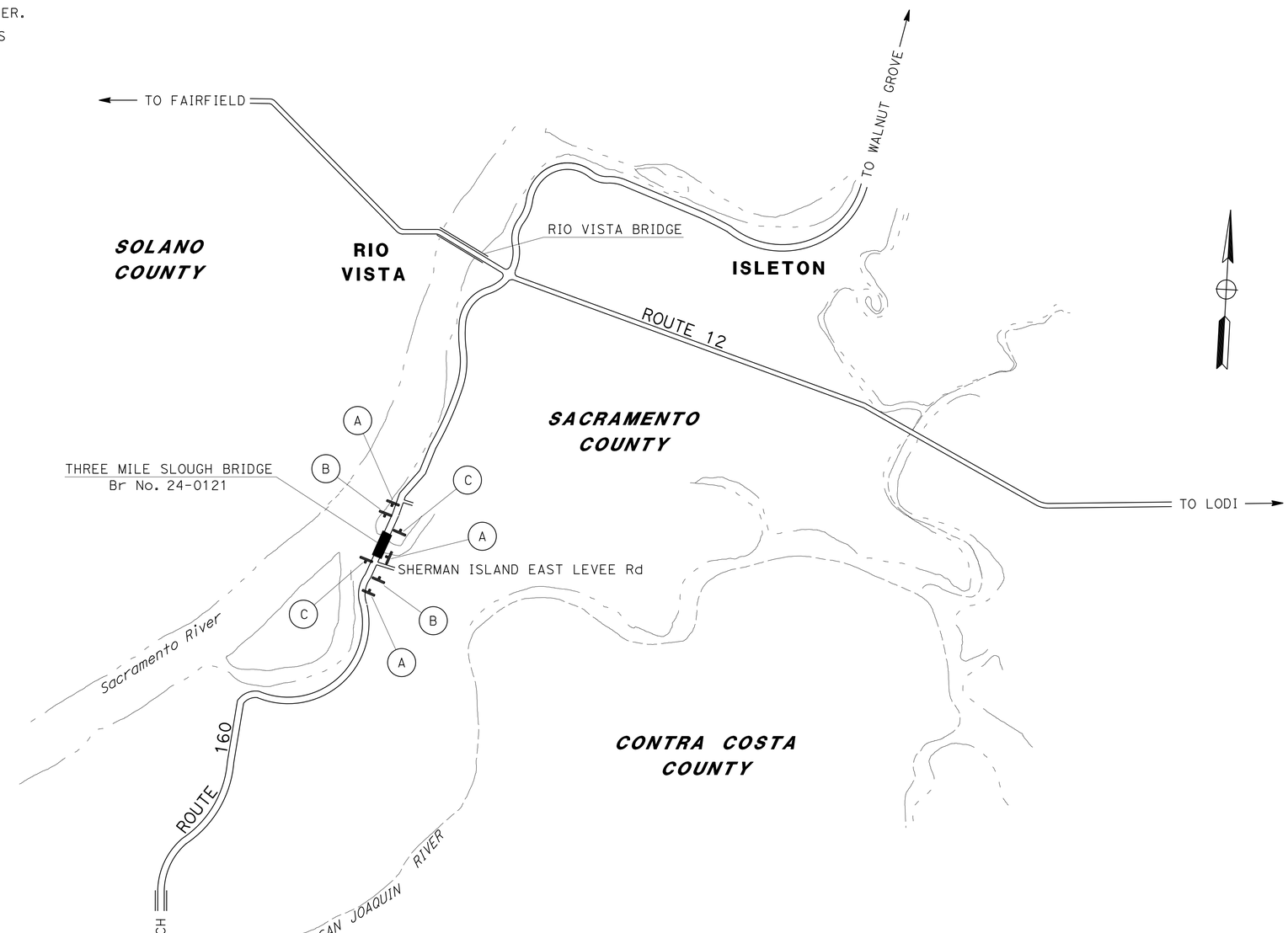

APPROVED FOR CONSTRUCTION AREA SIGN WORK ONLY

CONSTRUCTION AREA SIGNS

NO SCALE

CS-1

STATE OF CALIFORNIA - DEPARTMENT OF TRANSPORTATION
TRAFFIC
Caltrans

FUNCTIONAL SUPERVISOR: SERGIO ACEVES
CALCULATED-DESIGNED BY: JACK KEMMERLY
CHECKED BY: KRIS ALBERS
REVISED BY
DATE REVISED

LAST REVISION 9-23-14
DATE PLOTTED => 22-DEC-2014
TIME PLOTTED => 13:41

Dist	COUNTY	ROUTE	POST MILES TOTAL PROJECT	SHEET No.	TOTAL SHEETS
03	Sac	160	L7.0	3	61

M. A. Panchesson 11-17-14
REGISTERED CIVIL ENGINEER DATE

11-17-14
PLANS APPROVAL DATE

REGISTERED PROFESSIONAL ENGINEER M.A. PANCHESSON No. 44125 Exp. 6-30-15 CIVIL STATE OF CALIFORNIA

THE STATE OF CALIFORNIA OR ITS OFFICERS OR AGENTS SHALL NOT BE RESPONSIBLE FOR THE ACCURACY OR COMPLETENESS OF SCANNED COPIES OF THIS PLAN SHEET.

NOTES:

THE LIFT SPAN WILL BE RAISED AS NEEDED FOR NAVIGATIONAL TRAFFIC DURING STAGE 1 CONSTRUCTION (SEE SCD-1 SHEET FOR HORIZONTAL AND VERTICAL CLEARANCE INFORMATION).
FOR ACCURATE RIGHT OF WAY DATA, CONTACT RIGHT OF WAY ENGINEERING AT THE DISTRICT OFFICE.

1. INSTALL TEMPORARY SIGNAL SYSTEM AND COMPLETE BRIDGE SIGNAL SYSTEM WORK.
2. PLACE TEMPORARY RAILING (TYPE K) AND ALTERNATIVE TEMPORARY CRASH CUSHIONS.
3. PLACE TEMPORARY SIGNING AND STRIPING.
4. PLACE CONTAINMENT SYSTEM ON THE LEFT HALF OF BRIDGE SPANS 1, 2, 4, AND 5.
5. REMOVE EXISTING PAINT COATING SYSTEM FROM THE LEFT HALF OF BRIDGE SPANS 1, 2, 4, AND 5.
6. PLACE NEW PAINT COATING SYSTEM ON THE LEFT HALF OF BRIDGE SPANS 1, 2, 4, AND 5.
7. REMOVE CONTAINMENT SYSTEM FROM THE LEFT HALF OF BRIDGE SPANS 1, 2, 4, AND 5.
8. EXISTING UTILITY FACILITIES HAVE NOT BEEN INCLUDED ON THESE PLANS.

LEGEND

ALTERNATIVE TEMPORARY CRASH CUSHION
TEMPORARY RAILING (TYPE K)
DIRECTION OF TRAFFIC

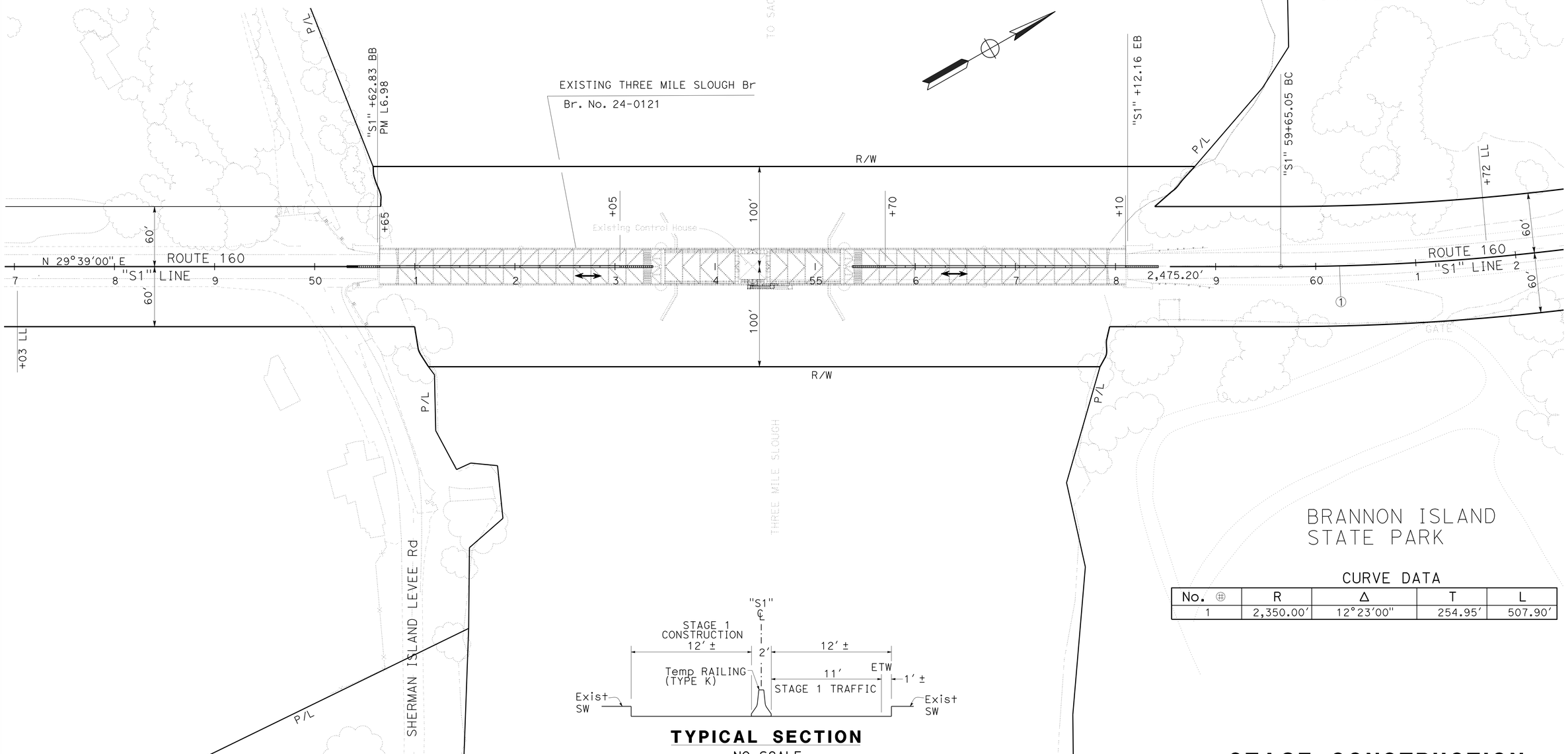

CURVE DATA

No. ⊕	R	Δ	T	L
1	2,350.00'	12°23'00"	254.95'	507.90'

TYPICAL SECTION
NO SCALE

STAGE CONSTRUCTION
STAGE 1
SCALE: 1" = 50'

SC-1

STATE OF CALIFORNIA - DEPARTMENT OF TRANSPORTATION
Caltrans® DIVISION OF ENGINEERING

FUNCTIONAL SUPERVISOR: ALI KIANI
CALCULATED-DESIGNED BY: DON WEHRLY
CHECKED BY: MIKE PANCHESSON
REVISED BY
DATE REVISED

LAST REVISION DATE PLOTTED => 22-DEC-2014
00-00-00 TIME PLOTTED => 13:41

Dist	COUNTY	ROUTE	POST MILES TOTAL PROJECT	SHEET No.	TOTAL SHEETS
03	Sac	160	L7.0	4	61

M. A. Panchesson 11-17-14
REGISTERED CIVIL ENGINEER DATE

11-17-14
PLANS APPROVAL DATE

REGISTERED PROFESSIONAL ENGINEER M.A. PANCHESSON No. 44125 Exp. 6-30-15 CIVIL STATE OF CALIFORNIA

THE STATE OF CALIFORNIA OR ITS OFFICERS OR AGENTS SHALL NOT BE RESPONSIBLE FOR THE ACCURACY OR COMPLETENESS OF SCANNED COPIES OF THIS PLAN SHEET.

NOTES:

THE LIFT SPAN WILL BE RAISED AS NEEDED FOR NAVIGATIONAL TRAFFIC DURING STAGE 2 CONSTRUCTION (SEE SCD-1 SHEET FOR HORIZONTAL AND VERTICAL CLEARANCE INFORMATION).
FOR ACCURATE RIGHT OF WAY DATA, CONTACT RIGHT OF WAY ENGINEERING AT THE DISTRICT OFFICE.

1. PLACE TEMPORARY SIGNING AND STRIPING.
2. PLACE CONTAINMENT SYSTEM ON THE RIGHT HALF OF BRIDGE SPANS 1, 2, 4, AND 5.
3. REMOVE EXISTING PAINT COATING SYSTEM FROM THE RIGHT HALF OF BRIDGE SPANS 1, 2, 4, AND 5.
4. PLACE NEW PAINT COATING SYSTEM ON THE RIGHT HALF OF BRIDGE SPANS 1, 2, 4, AND 5.
5. REMOVE CONTAINMENT SYSTEM FROM THE RIGHT HALF OF BRIDGE SPANS 1, 2, 4, AND 5.
6. REMOVE TEMPORARY RAILING (TYPE K).
7. EXISTING UTILITY FACILITIES HAVE NOT BEEN INCLUDED ON THESE PLANS.

LEGEND

ALTERNATIVE TEMPORARY CRASH CUSHION
TEMPORARY RAILING (TYPE K)
DIRECTION OF TRAFFIC

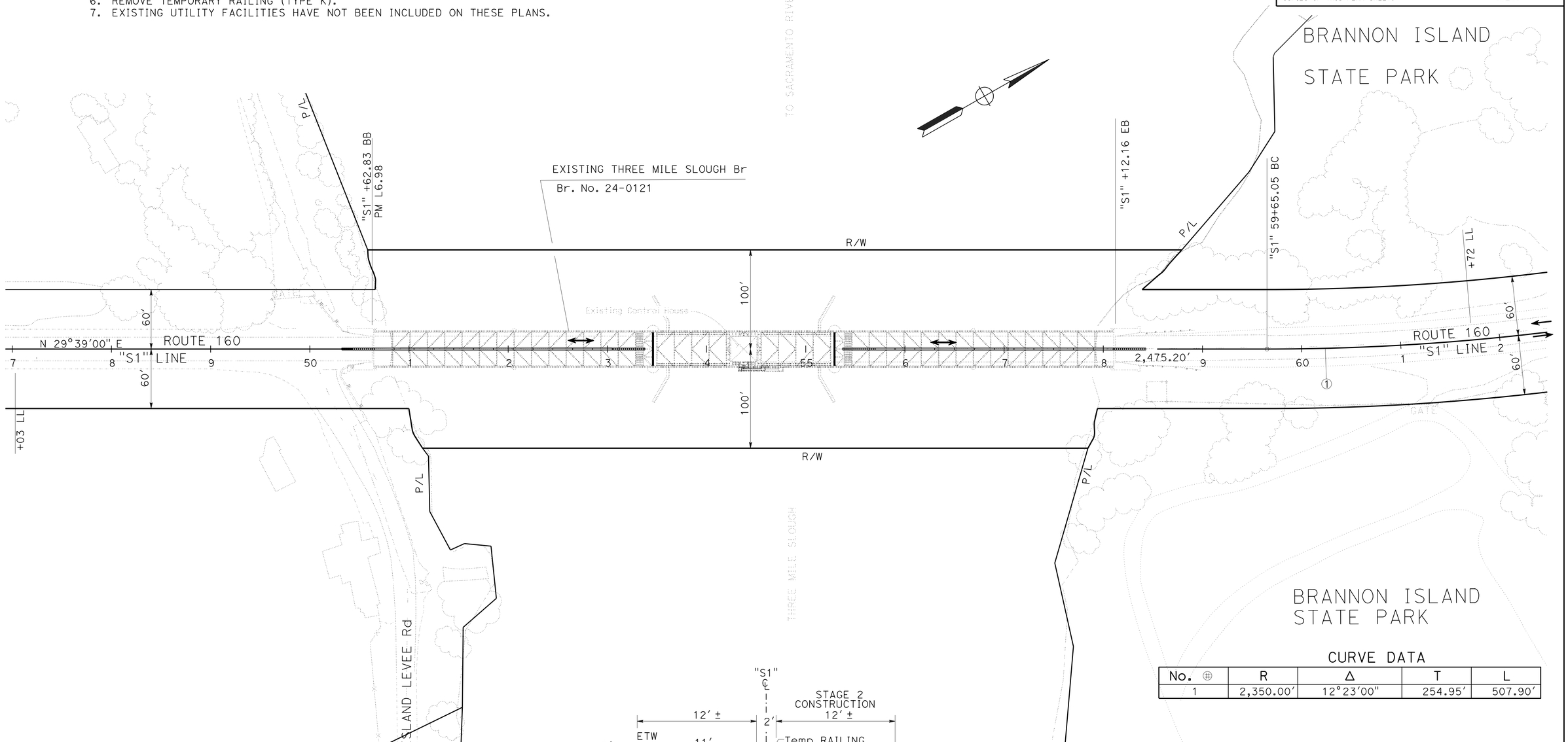

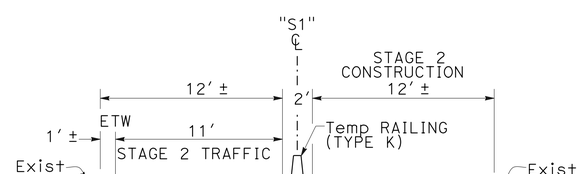

TYPICAL SECTION
NO SCALE

CURVE DATA

No. ⊕	R	Δ	T	L
1	2,350.00'	12°23'00"	254.95'	507.90'

STAGE CONSTRUCTION
STAGE 2
SCALE: 1" = 50'

SC-2

STATE OF CALIFORNIA - DEPARTMENT OF TRANSPORTATION
Caltrans® DIVISION OF ENGINEERING

FUNCTIONAL SUPERVISOR: ALI KIANI
CALCULATED-DESIGNED BY: DON WEHRLY
CHECKED BY: MIKE PANCHESSON
REVISED BY
DATE REVISED

LAST REVISION: DATE PLOTTED => 22-DEC-2014
00-00-00 TIME PLOTTED => 13:41

Dist	COUNTY	ROUTE	POST MILES TOTAL PROJECT	SHEET No.	TOTAL SHEETS
03	Sac	160	L7.0	5	61

M. A. Panchesson 11-17-14
REGISTERED CIVIL ENGINEER DATE

11-17-14
PLANS APPROVAL DATE

REGISTERED PROFESSIONAL ENGINEER M.A. PANCHESSON No. 44125 Exp. 6-30-15 CIVIL STATE OF CALIFORNIA

THE STATE OF CALIFORNIA OR ITS OFFICERS OR AGENTS SHALL NOT BE RESPONSIBLE FOR THE ACCURACY OR COMPLETENESS OF SCANNED COPIES OF THIS PLAN SHEET.

NOTES:

THE LIFT SPAN (SPAN 3) WILL BE PAINTED IN THE UNRAISED POSITION AND CLOSED TO NAVIGATIONAL TRAFFIC (PROHIBITING PASSAGE UNDERNEATH THE THREE MILE SLOUGH BRIDGE). SEE SHEET SCD-2 FOR TEMPORARY SCAFFOLDING INFORMATION.

1. PLACE TEMPORARY SIGNING AND STRIPING.
2. PLACE CONTAINMENT SYSTEM AROUND THE TOWERS, CONTROL HOUSE, AND THE RIGHT HALF OF SPAN 3 (SEE Str PLANS).
3. REMOVE EXISTING PAINT COATING SYSTEM FROM AROUND THE TOWERS, CONTROL HOUSE, AND THE RIGHT HALF OF SPAN 3.
4. PLACE NEW PAINT COATING SYSTEM ON THE TOWERS, CONTROL HOUSE, AND THE RIGHT HALF OF SPAN 3.
5. REMOVE CONTAINMENT SYSTEM FROM THE RIGHT HALF OF SPAN 3.
6. REMOVE CONTAINMENT SYSTEM FROM AROUND THE TOWERS AND CONTROL HOUSE IF THE WORK HAS BEEN COMPLETED.
7. EXISTING UTILITY FACILITIES HAVE NOT BEEN INCLUDED ON THESE PLANS.

LEGEND

ALTERNATIVE TEMPORARY CRASH CUSHION
TEMPORARY RAILING (TYPE K)

DIRECTION OF TRAFFIC

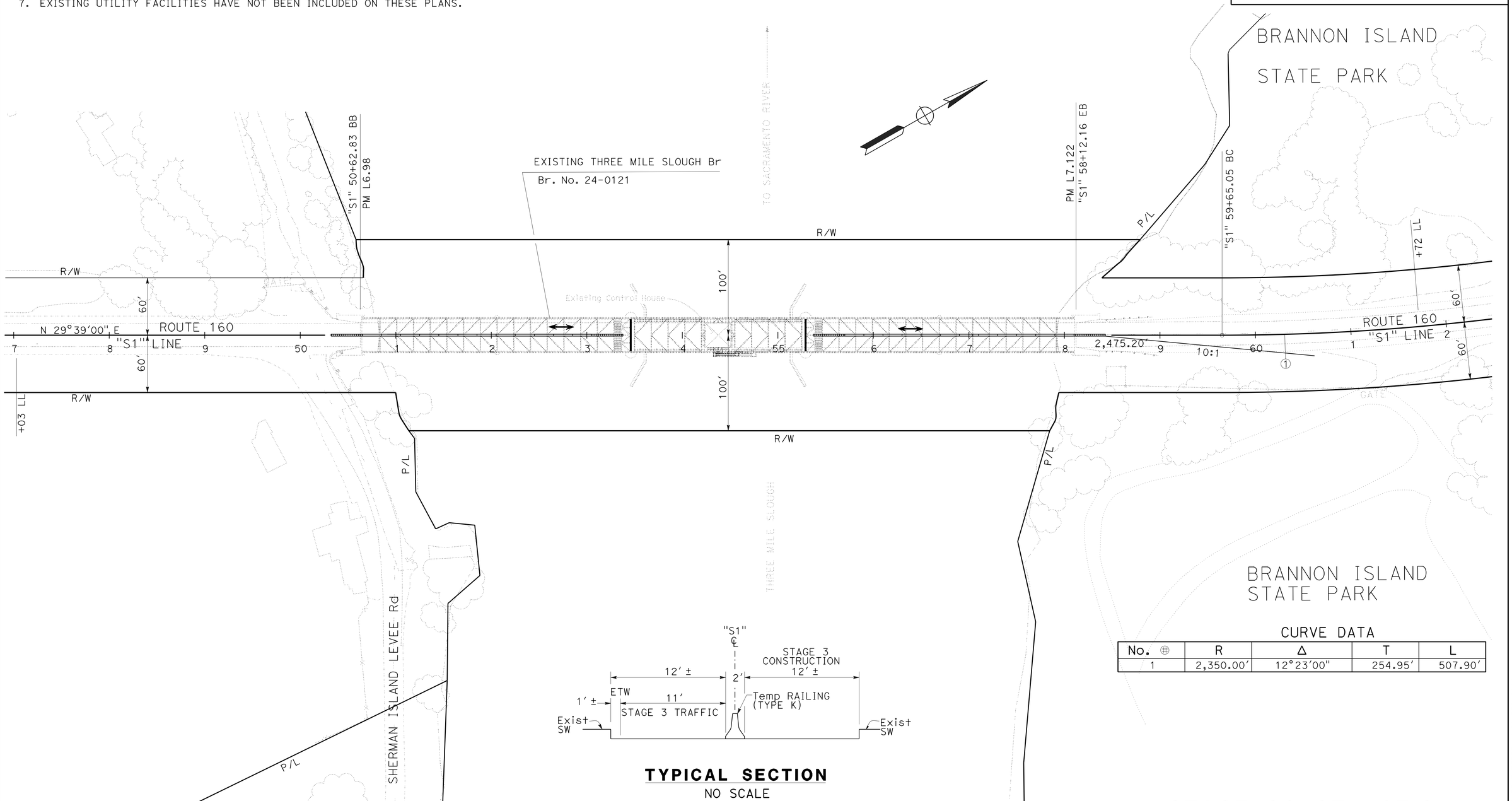

TYPICAL SECTION
NO SCALE

CURVE DATA

No. ⊕	R	Δ	T	L
1	2,350.00'	12°23'00"	254.95'	507.90'

STAGE CONSTRUCTION
STAGE 3
SCALE: 1" = 50'

SC-3

STATE OF CALIFORNIA - DEPARTMENT OF TRANSPORTATION
Caltrans® DIVISION OF ENGINEERING

FUNCTIONAL SUPERVISOR: ALI KIANI
CALCULATED-DESIGNED BY: DON WEHRLY
CHECKED BY: MIKE PANCHESSON
REVISED BY
DATE REVISED

LAST REVISION 00-00-00
DATE PLOTTED => 22-DEC-2014
TIME PLOTTED => 13:41

Dist	COUNTY	ROUTE	POST MILES TOTAL PROJECT	SHEET No.	TOTAL SHEETS
03	Sac	160	L7.0	6	61

M. A. Panchesson 11-17-14
REGISTERED CIVIL ENGINEER DATE

11-17-14
PLANS APPROVAL DATE

REGISTERED PROFESSIONAL ENGINEER M.A. PANCHESSON No. 44125 Exp. 6-30-15 CIVIL STATE OF CALIFORNIA

THE STATE OF CALIFORNIA OR ITS OFFICERS OR AGENTS SHALL NOT BE RESPONSIBLE FOR THE ACCURACY OR COMPLETENESS OF SCANNED COPIES OF THIS PLAN SHEET.

NOTES:

THE LIFT SPAN (SPAN 3) WILL BE PAINTED IN THE UNRAISED POSITION AND CLOSED TO NAVIGATIONAL (PROHIBITING PASSAGE UNDERNEATH THE THREE MILE SLOUGH BRIDGE). SEE SHEET SCD-2 FOR TEMPORARY SCAFFOLDING INFORMATION.

1. PLACE TEMPORARY SIGNING AND STRIPING.
2. PLACE CONTAINMENT SYSTEM AROUND THE TOWERS, CONTROL HOUSE, AND THE LEFT HALF OF SPAN 3 (SEE Str PLANS).
3. REMOVE EXISTING PAINT COATING SYSTEM FROM AROUND THE TOWERS, CONTROL HOUSE, AND THE LEFT HALF OF SPAN 3
4. PLACE NEW PAINT COATING SYSTEM ON THE TOWERS, CONTROL HOUSE, AND LEFT HALF OF SPAN 3.
5. REMOVE CONTAINMENT SYSTEM FROM THE LEFT HALF OF SPAN 3.
6. REMOVE CONTAINMENT SYSTEM FROM AROUND THE TOWERS AND CONTROL HOUSE IF WORK WAS NOT COMPLETED DURING STAGE 3.
7. REMOVE TEMPORARY SIGNAL SYSTEM, TEMPORARY RAILING (TYPE K), AND ALTERNATIVE TEMPORARY CRASH CUSHIONS.
7. PLACE PERMANENT SIGNING AND STRIPING.
8. EXISTING UTILITY FACILITIES HAVE NOT BEEN INCLUDED ON THESE PLANS.

LEGEND

ALTERNATIVE TEMPORARY CRASH CUSHION
TEMPORARY RAILING (TYPE K)

DIRECTION OF TRAFFIC

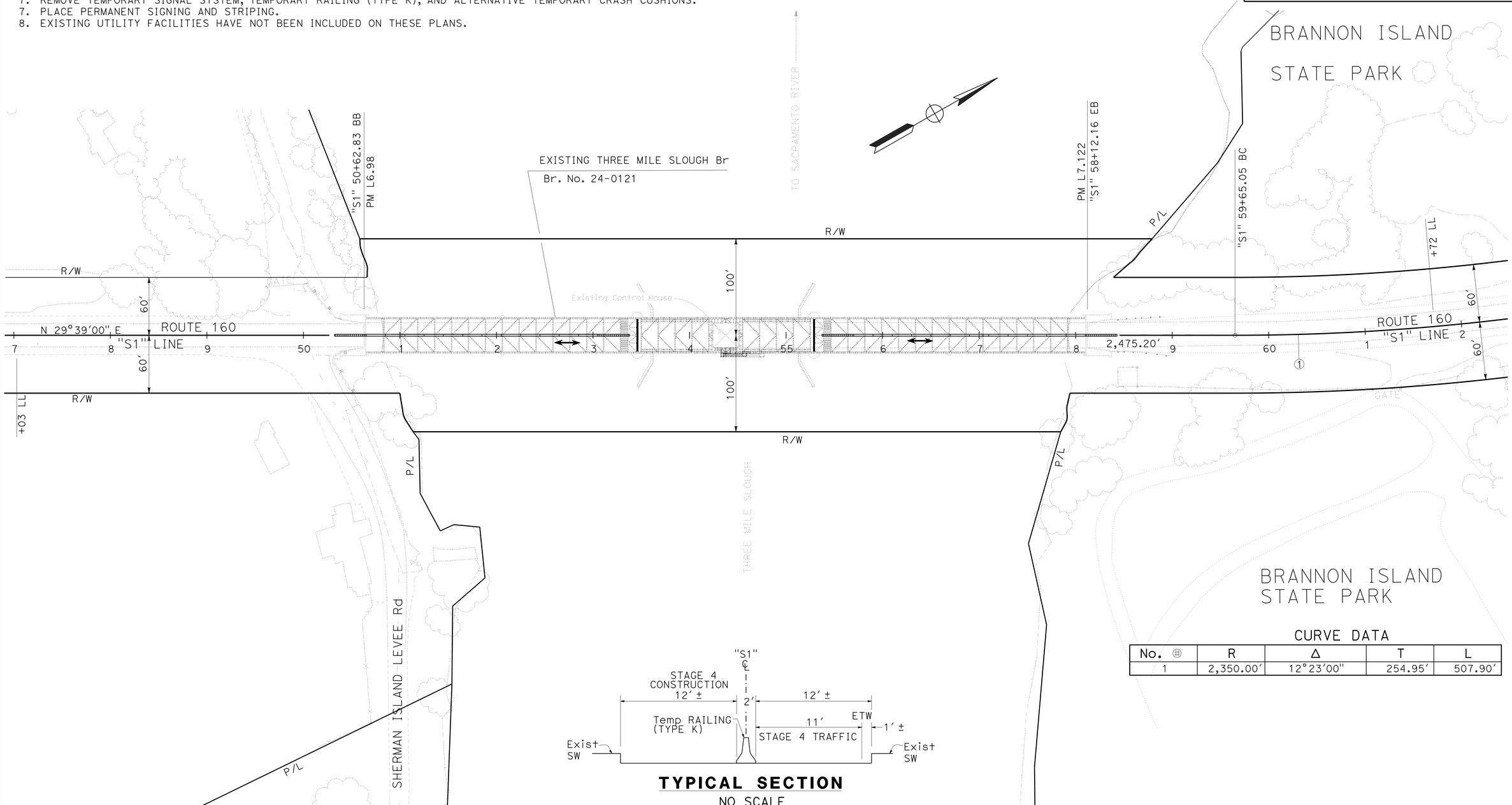

TYPICAL SECTION
NO SCALE

CURVE DATA

No. ⊕	R	Δ	T	L
1	2,350.00'	12°23'00"	254.95'	507.90'

STAGE CONSTRUCTION
STAGE 4
SCALE: 1" = 50'

SC-4

STATE OF CALIFORNIA - DEPARTMENT OF TRANSPORTATION
Caltrans® DIVISION OF ENGINEERING

FUNCTIONAL SUPERVISOR: ALI KIANI
CALCULATED-DESIGNED BY: DON WEHRLY
CHECKED BY: MIKE PANCHESSON
REVISED BY
DATE REVISED

LAST REVISION 00-00-00
DATE PLOTTED => 22-DEC-2014
TIME PLOTTED => 13:41

Dist	COUNTY	ROUTE	POST MILES TOTAL PROJECT	SHEET No.	TOTAL SHEETS
03	Sac	160	L7.0	7	61

M. A. Panchesson 11-17-14
REGISTERED CIVIL ENGINEER DATE

11-17-14
PLANS APPROVAL DATE

REGISTERED PROFESSIONAL ENGINEER
M.A. PANCHESSON
No. 44125
Exp. 6-30-15
CIVIL
STATE OF CALIFORNIA

THE STATE OF CALIFORNIA OR ITS OFFICERS OR AGENTS SHALL NOT BE RESPONSIBLE FOR THE ACCURACY OR COMPLETENESS OF SCANNED COPIES OF THIS PLAN SHEET.

NOTES:

1. DURING STAGES 1 AND 2, THE LIFT SPAN WILL BE RAISED AS NEEDED FOR NAVIGATIONAL TRAFFIC ALLOWING PASSAGE UNDERNEATH THE THREE MILE SLOUGH BRIDGE.
2. LIMITS OF ALL TEMPORARY CONSTRUCTION APPURTANCES (SCAFFOLDING FOR THE CONTAINMENT SYSTEM, ETC.): VERTICAL DEPTH SHALL BE NO GREATER THAN 4' FEET BELOW BOTTOM CHORD OF THE STRUCTURE. HORIZONTAIL CLEARANCE TO SIDES OF PIERS OR FENDERS SHALL BE NO LESS THAN 1 FOOT.

LEGEND

- LIMITS OF ALL TEMPORARY CONSTRUCTION APPURTANCES (SCAFFOLDING FOR THE CONTAINMENT SYSTEM, ETC.)

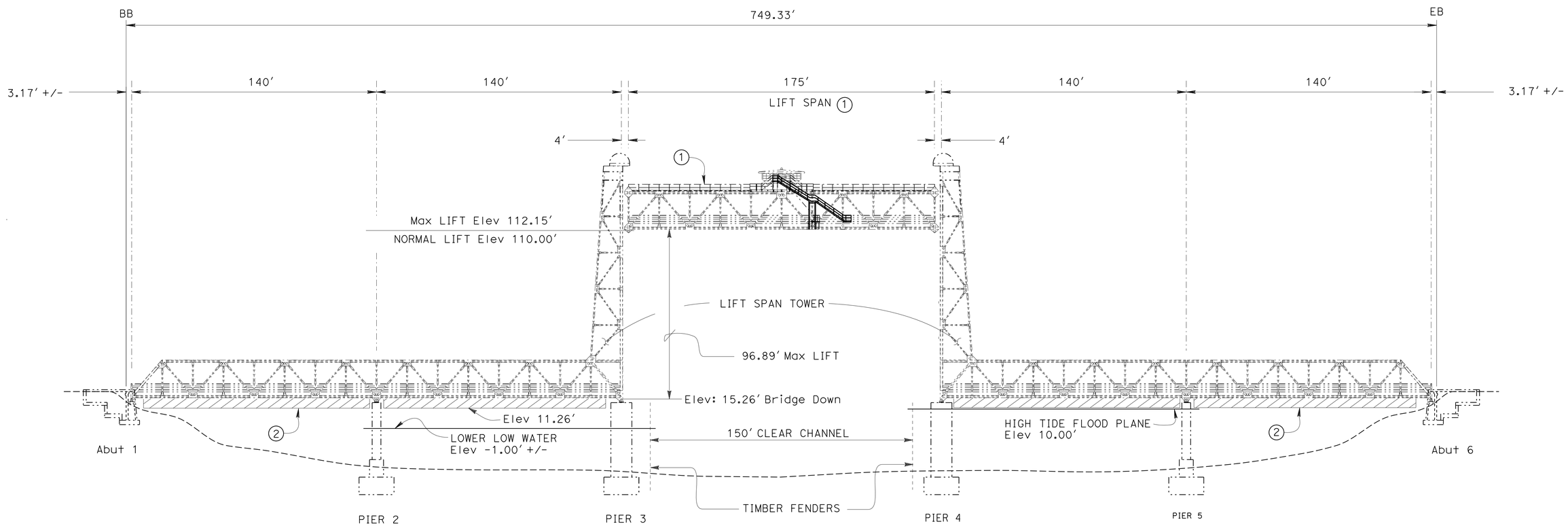

ELEVATION
NO SCALE

STAGE CONSTRUCTION DETAILS

STAGES 1 AND 2
NO SCALE

SCD-1

STATE OF CALIFORNIA - DEPARTMENT OF TRANSPORTATION
Caltrans® DIVISION OF ENGINEERING

FUNCTIONAL SUPERVISOR: ALI KIANI
CALCULATED-DESIGNED BY: DON WEHRLY
CHECKED BY: MIKE PANCHESSON
REVISED BY
DATE REVISED

LAST REVISION 00-00-00
DATE PLOTTED => 22-DEC-2014
TIME PLOTTED => 13:41

Dist	COUNTY	ROUTE	POST MILES TOTAL PROJECT	SHEET No.	TOTAL SHEETS
03	Sac	160	L7.0	8	61

M. A. Panchesson 11-17-14
REGISTERED CIVIL ENGINEER DATE

11-17-14
PLANS APPROVAL DATE

REGISTERED PROFESSIONAL ENGINEER
M.A. PANCHESSON
No. 44125
Exp. 6-30-15
CIVIL
STATE OF CALIFORNIA

THE STATE OF CALIFORNIA OR ITS OFFICERS OR AGENTS SHALL NOT BE RESPONSIBLE FOR THE ACCURACY OR COMPLETENESS OF SCANNED COPIES OF THIS PLAN SHEET.

NOTES:

1. DURING STAGES 3 AND 4, THE LIFT SPAN SHALL BE PAINTED IN THE UNRAISED POSITION. THE BRIDGE WILL BE CLOSED TO NAVIGATIONAL TRAFFIC (PROHIBITING PASSAGE UNDERNEATH THE THREE MILE SLOUGH BRIDGE).
2. LIMITS OF ALL TEMPORARY CONSTRUCTION APPURTANCES (SCAFFOLDING FOR THE CONTAINMENT SYSTEM, ETC.): VERTICAL DEPTH SHALL BE NO GREATER THAN 4' FEET BELOW BOTTOM CHORD OF THE STRUCTURE. HORIZONTAIL CLEARANCE TO SIDES OF PIERS OR FENDERS SHALL BE NO LESS THAN 1 FOOT.

LEGEND

▨ - LIMITS OF ALL TEMPORARY CONSTRUCTION APPURTANCES (SCAFFOLDING FOR THE CONTAINMENT SYSTEM, ETC.)

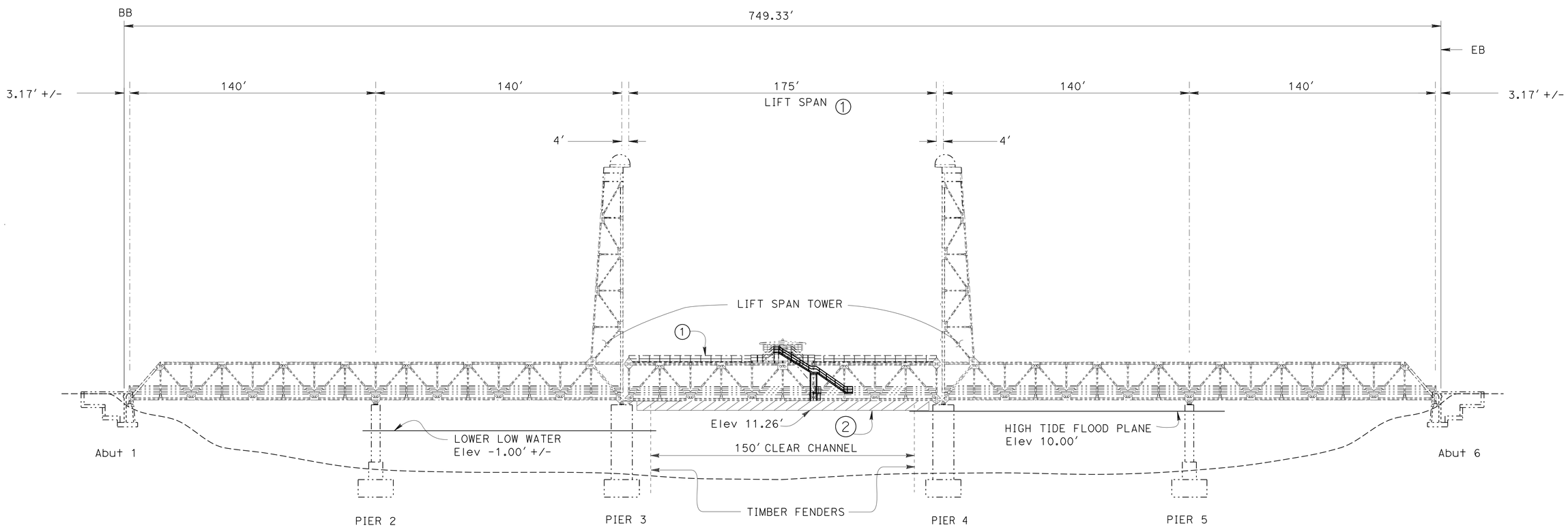

ELEVATION
NO SCALE

STAGE CONSTRUCTION DETAILS
STAGES 3 AND 4
NO SCALE

SCD-2

STATE OF CALIFORNIA - DEPARTMENT OF TRANSPORTATION
Caltrans® DIVISION OF ENGINEERING

FUNCTIONAL SUPERVISOR	ALI KIANI
CALCULATED-DESIGNED BY	DON WEHRLY
CHECKED BY	MIKE PANCHESSON
REVISED BY	
DATE REVISED	

LAST REVISION 00-00-00
DATE PLOTTED => 22-DEC-2014
TIME PLOTTED => 13:41

Dist	COUNTY	ROUTE	POST MILES TOTAL PROJECT	SHEET No.	TOTAL SHEETS
03	Sac	160	L7.0	9	61

Kris M. Albers 11-17-14
REGISTERED CIVIL ENGINEER DATE

11-17-14
PLANS APPROVAL DATE

REGISTERED PROFESSIONAL ENGINEER
KRIS M. ALBERS
No. 49986
Exp. 6-30-15
CIVIL
STATE OF CALIFORNIA

THE STATE OF CALIFORNIA OR ITS OFFICERS OR AGENTS SHALL NOT BE RESPONSIBLE FOR THE ACCURACY OR COMPLETENESS OF SCANNED COPIES OF THIS PLAN SHEET.

NOTES:

1. ALL LANES SHALL BE 12′ WIDE UNLESS OTHERWISE SHOWN.
2. ALL TRAFFIC PLASTIC DRUMS SHALL BE INSTALLED ON 50′ CENTERS UNLESS OTHERWISE SHOWN.
3. ALL SIGN CODES SHOWN ARE FEDERAL SIGN CODES UNLESS OTHERWISE DESIGNATED AS CALIFORNIA SIGN CODES.
4. ALL EXISTING SIGNS NOT SHOWN TO BE COVERED SHALL REMAIN IN PLACE.
5. EXACT SIGN LOCATIONS TO BE DETERMINED BY THE ENGINEER.
6. THE REMOVAL LENGTH SHOWN REPRESENTS LINEAR MEASUREMENT, NOT PAY QUANTITY.
7. FOR ADDITIONAL CONSTRUCTION AREA SIGNS, SEE CONSTRUCTION AREA SIGN PLAN.

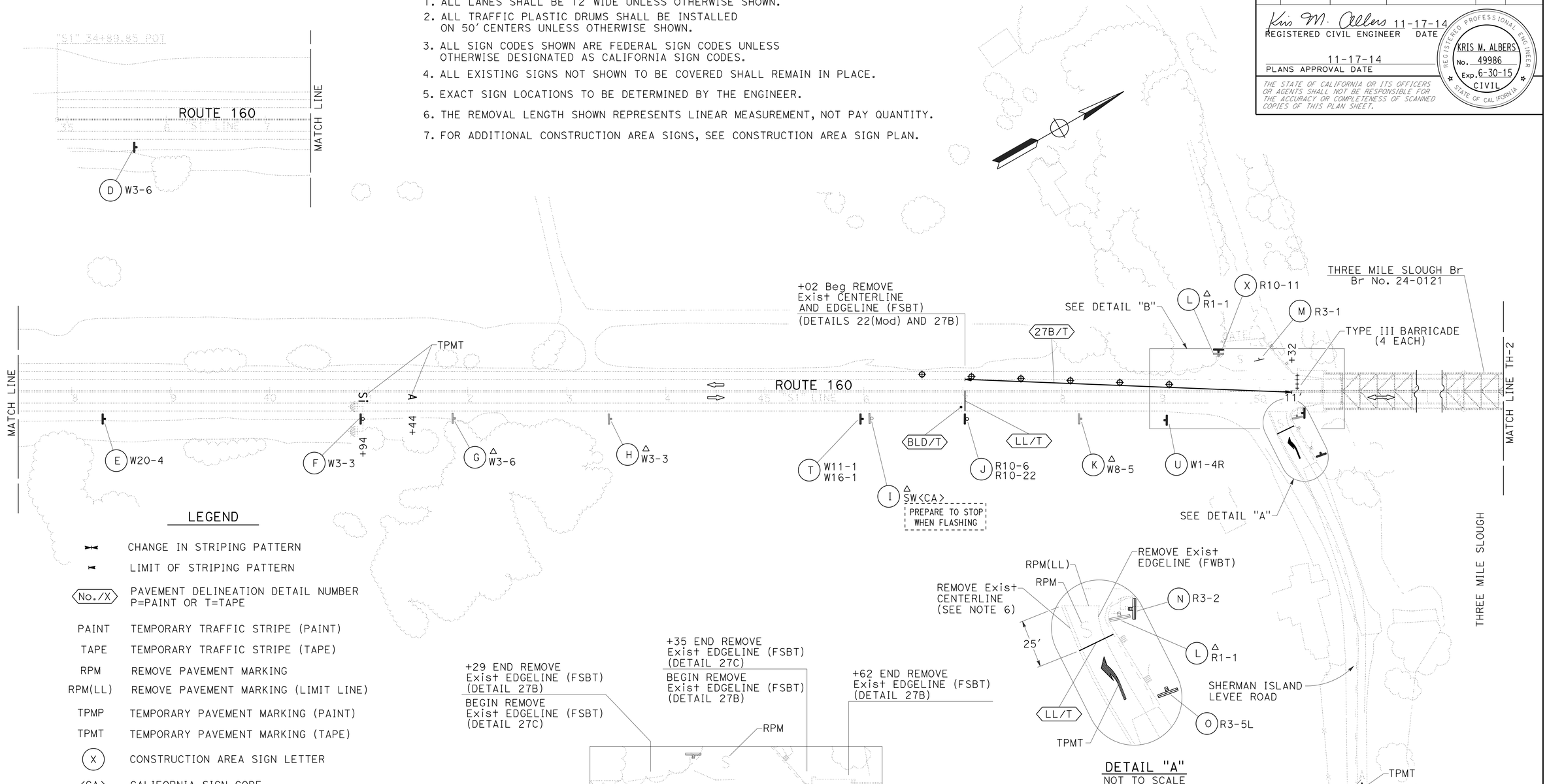

LEGEND

	CHANGE IN STRIPING PATTERN
	LIMIT OF STRIPING PATTERN
No./X	PAVEMENT DELINEATION DETAIL NUMBER P=PAINT OR T=TAPE
PAINT	TEMPORARY TRAFFIC STRIPE (PAINT)
TAPE	TEMPORARY TRAFFIC STRIPE (TAPE)
RPM	REMOVE PAVEMENT MARKING
RPM(LL)	REMOVE PAVEMENT MARKING (LIMIT LINE)
TPMP	TEMPORARY PAVEMENT MARKING (PAINT)
TPMT	TEMPORARY PAVEMENT MARKING (TAPE)
X	CONSTRUCTION AREA SIGN LETTER
<CA>	CALIFORNIA SIGN CODE
△	COVER EXISTING SIGN
⊕	TRAFFIC PLASTIC DRUM
Si	"SIGNAL" PAVEMENT MARKING
S	"STOP" PAVEMENT MARKING
A	"AHEAD" PAVEMENT MARKING
	TYPE III ARROW
BLD/T	BICYCLE LOOP DETECTOR SYMBOL PAVEMENT MARKING T=TAPE

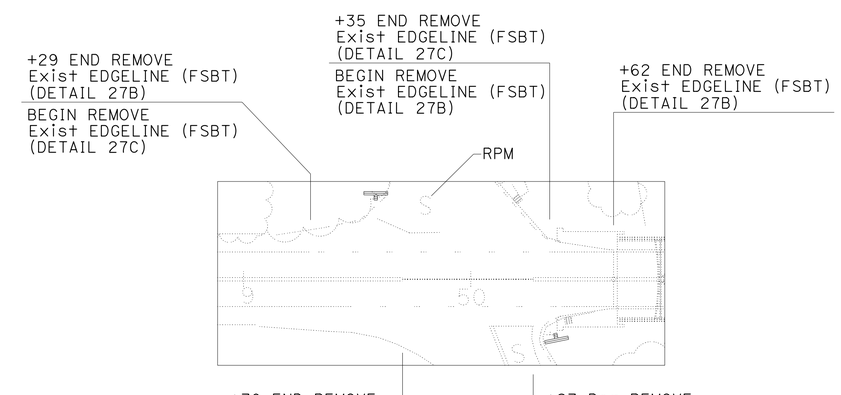

DETAIL "B"
NOT TO SCALE

DETAIL "A"
NOT TO SCALE

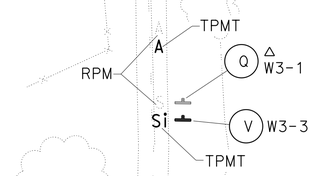

SHERMAN ISLAND
LEVEE ROAD

TRAFFIC HANDLING PLAN
STAGE 1
SCALE: 1"=50′

TH-1

APPROVED FOR TRAFFIC HANDLING WORK ONLY

STATE OF CALIFORNIA - DEPARTMENT OF TRANSPORTATION
Caltrans
TRAFFIC
FUNCTIONAL SUPERVISOR: SERGIO ACEVES
CALCULATED-DESIGNED BY: JACK KEMMERLY
CHECKED BY: KRIS ALBERS
REVISED BY
DATE REVISED
LAST REVISION 10-8-14
DATE PLOTTED => 22-DEC-2014
TIME PLOTTED => 13:41

Dist	COUNTY	ROUTE	POST MILES TOTAL PROJECT	SHEET No.	TOTAL SHEETS
03	Sac	160	L7.0	10	61

Kris M. Albers 11-17-14
REGISTERED CIVIL ENGINEER DATE

11-17-14
PLANS APPROVAL DATE

REGISTERED PROFESSIONAL ENGINEER
KRIS M. ALBERS
No. 49986
Exp. 6-30-15
CIVIL
STATE OF CALIFORNIA

THE STATE OF CALIFORNIA OR ITS OFFICERS OR AGENTS SHALL NOT BE RESPONSIBLE FOR THE ACCURACY OR COMPLETENESS OF SCANNED COPIES OF THIS PLAN SHEET.

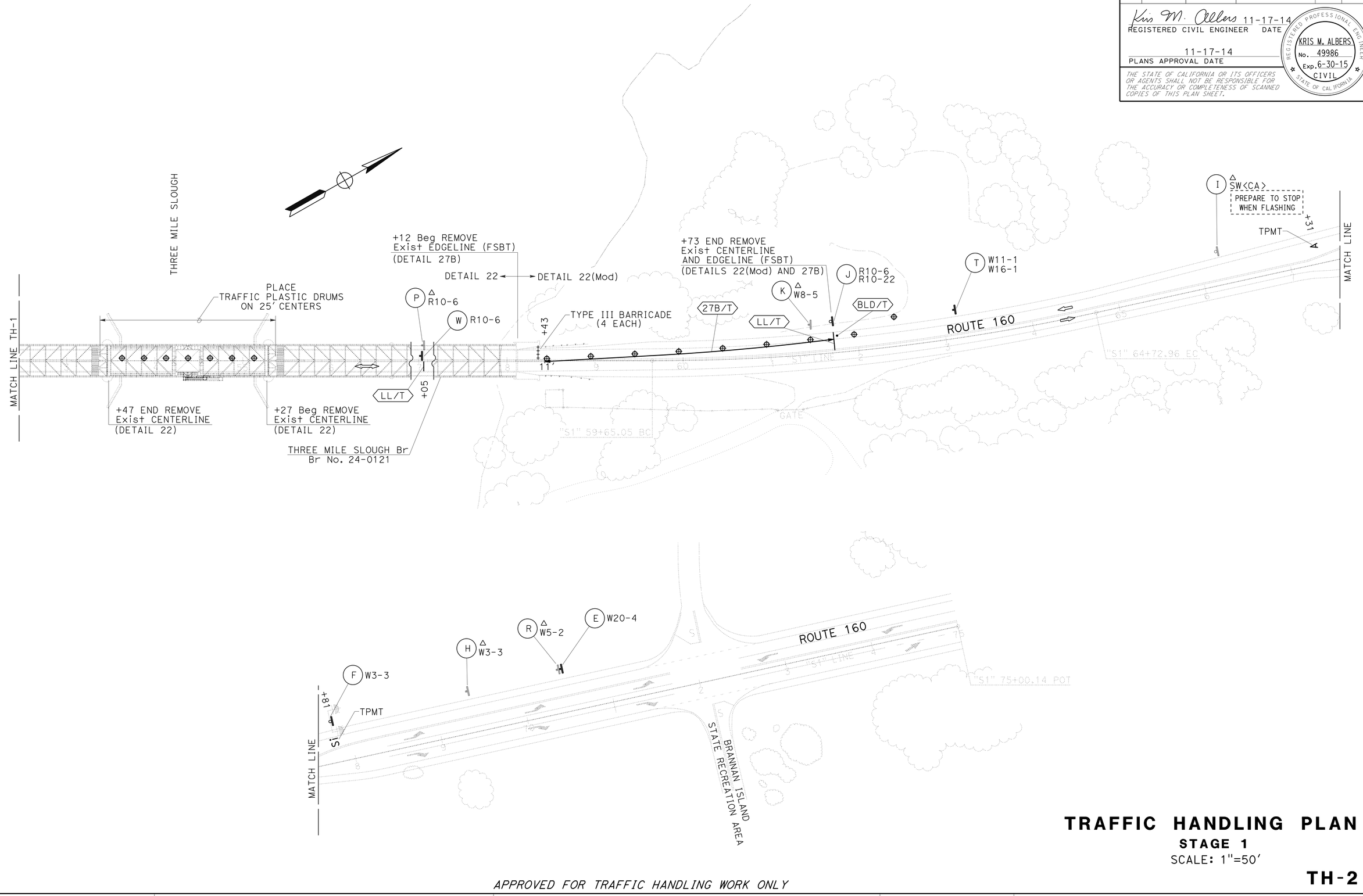

TRAFFIC HANDLING PLAN

STAGE 1

SCALE: 1"=50'

TH-2

APPROVED FOR TRAFFIC HANDLING WORK ONLY

STATE OF CALIFORNIA - DEPARTMENT OF TRANSPORTATION
Caltrans®
TRAFFIC

FUNCTIONAL SUPERVISOR: SERGIO ACEVES
CALCULATED-DESIGNED BY: JACK KEMMERLY
CHECKED BY: KRIS ALBERS
REVISED BY
DATE REVISED

LAST REVISION 9-26-14
DATE PLOTTED => 22-DEC-2014
TIME PLOTTED => 13:41

Dist	COUNTY	ROUTE	POST MILES TOTAL PROJECT	SHEET No.	TOTAL SHEETS
03	Sac	160	L7.0	11	61

Kris M. Albers 11-17-14
REGISTERED CIVIL ENGINEER DATE

11-17-14
PLANS APPROVAL DATE

REGISTERED PROFESSIONAL ENGINEER
KRIS M. ALBERS
No. 49986
Exp. 6-30-15
CIVIL
STATE OF CALIFORNIA

THE STATE OF CALIFORNIA OR ITS OFFICERS OR AGENTS SHALL NOT BE RESPONSIBLE FOR THE ACCURACY OR COMPLETENESS OF SCANNED COPIES OF THIS PLAN SHEET.

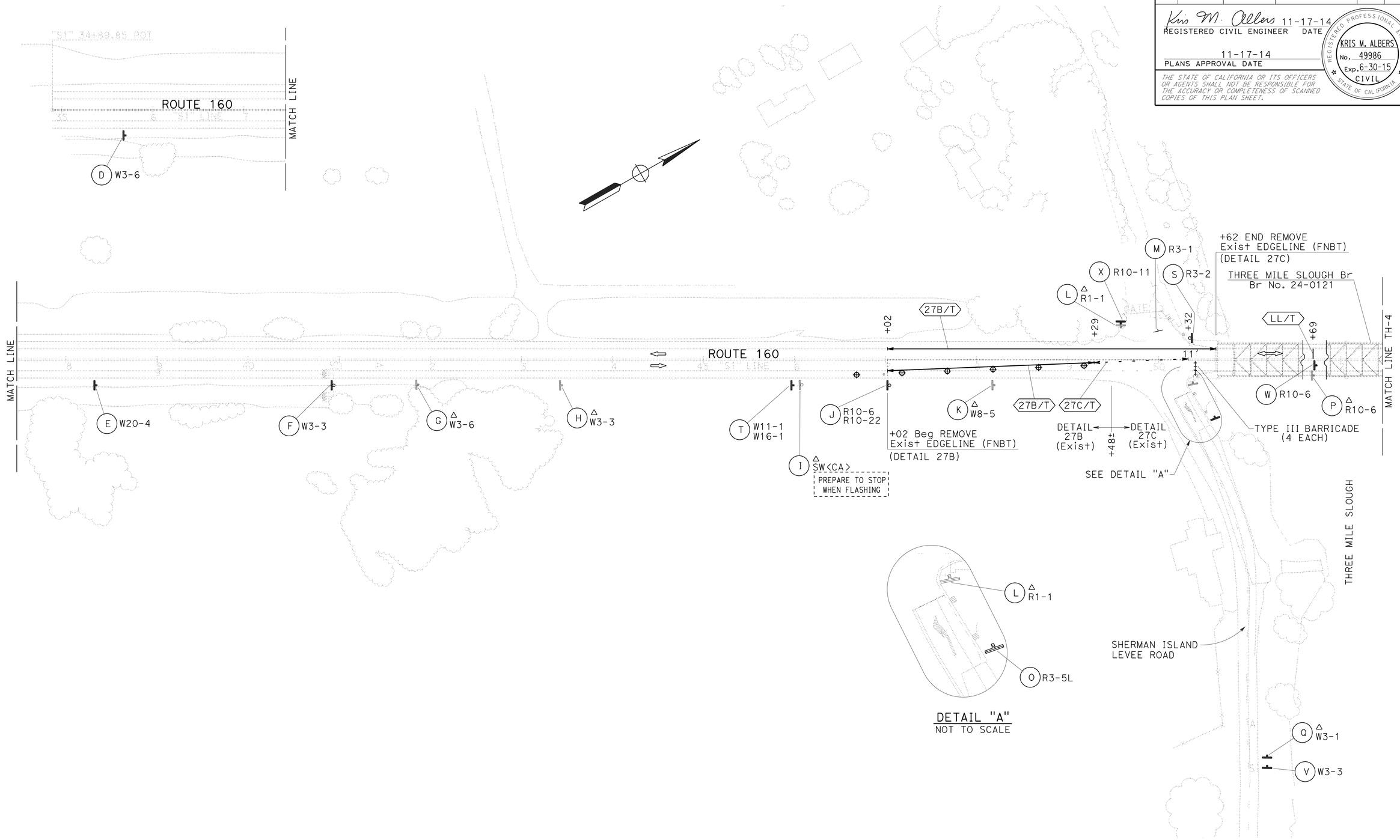

TRAFFIC HANDLING PLAN

STAGES 2 AND 3

SCALE: 1"=50'

TH-3

APPROVED FOR TRAFFIC HANDLING WORK ONLY

STATE OF CALIFORNIA - DEPARTMENT OF TRANSPORTATION
Caltrans
TRAFFIC

FUNCTIONAL SUPERVISOR: SERGIO ACEVES
CALCULATED-DESIGNED BY: JACK KEMMERLY
CHECKED BY: KRIS ALBERS
REVISED BY
DATE REVISED

LAST REVISION 10-8-14
DATE PLOTTED => 22-DEC-2014
TIME PLOTTED => 13:41

Dist	COUNTY	ROUTE	POST MILES TOTAL PROJECT	SHEET No.	TOTAL SHEETS
03	Sac	160	L7.0	12	61

Kris M. Albers 11-17-14
REGISTERED CIVIL ENGINEER DATE

11-17-14
PLANS APPROVAL DATE

REGISTERED PROFESSIONAL ENGINEER
KRIS M. ALBERS
No. 49986
Exp. 6-30-15
CIVIL
STATE OF CALIFORNIA

THE STATE OF CALIFORNIA OR ITS OFFICERS OR AGENTS SHALL NOT BE RESPONSIBLE FOR THE ACCURACY OR COMPLETENESS OF SCANNED COPIES OF THIS PLAN SHEET.

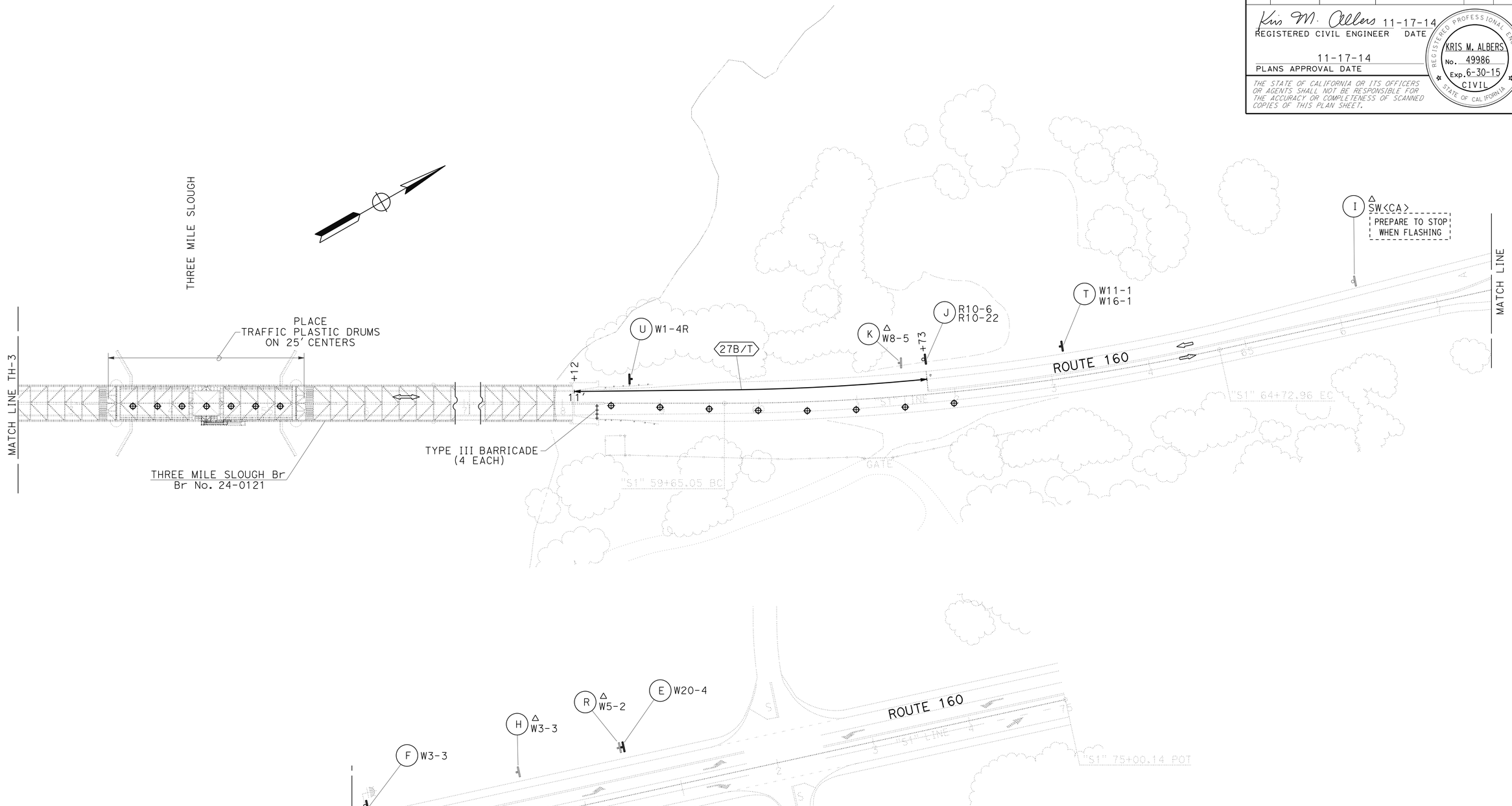

TRAFFIC HANDLING PLAN

STAGES 2 AND 3

SCALE: 1"=50'

TH-4

APPROVED FOR TRAFFIC HANDLING WORK ONLY

STATE OF CALIFORNIA - DEPARTMENT OF TRANSPORTATION
Caltrans®
TRAFFIC

FUNCTIONAL SUPERVISOR: SERGIO ACEVES
CALCULATED-DESIGNED BY: JACK KEMMERLY
CHECKED BY: KRIS ALBERS
REVISED BY
DATE REVISED

LAST REVISION 9-26-14
DATE PLOTTED => 22-DEC-2014
TIME PLOTTED => 13:41

Dist	COUNTY	ROUTE	POST MILES TOTAL PROJECT	SHEET No.	TOTAL SHEETS
03	Sac	160	L7.0	13	61

Kris M. Albers 11-17-14
REGISTERED CIVIL ENGINEER DATE

11-17-14
PLANS APPROVAL DATE

REGISTERED PROFESSIONAL ENGINEER
KRIS M. ALBERS
No. 49986
Exp. 6-30-15
CIVIL
STATE OF CALIFORNIA

THE STATE OF CALIFORNIA OR ITS OFFICERS OR AGENTS SHALL NOT BE RESPONSIBLE FOR THE ACCURACY OR COMPLETENESS OF SCANNED COPIES OF THIS PLAN SHEET.

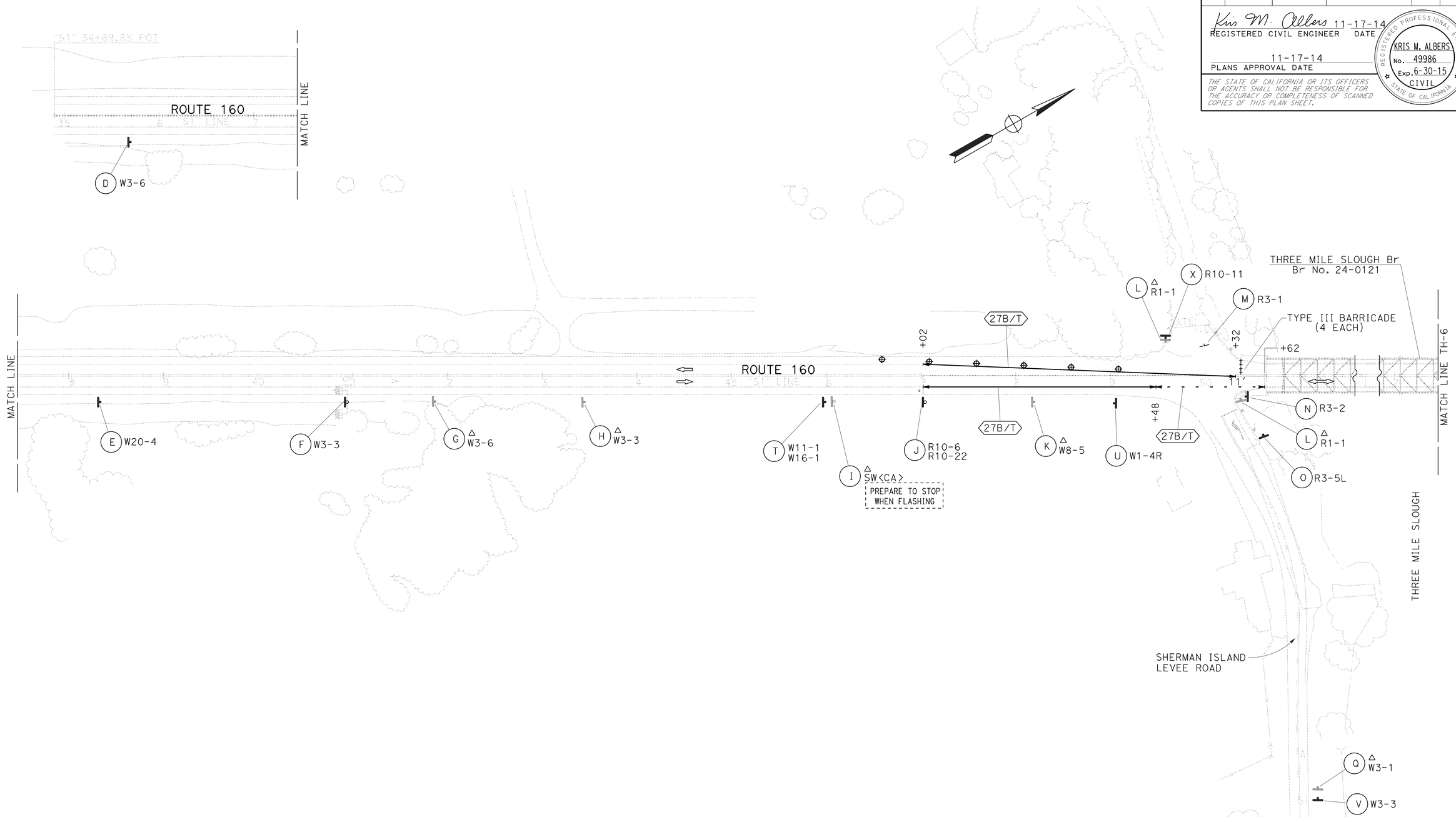

TRAFFIC HANDLING PLAN

STAGE 4

SCALE: 1"=50'

TH-5

APPROVED FOR TRAFFIC HANDLING WORK ONLY

STATE OF CALIFORNIA - DEPARTMENT OF TRANSPORTATION
Caltrans®
TRAFFIC

FUNCTIONAL SUPERVISOR: SERGIO ACEVES
CALCULATED-DESIGNED BY: JACK KEMMERLY
CHECKED BY: KRIS ALBERS
REVISED BY
DATE REVISED

LAST REVISION 10-8-14
DATE PLOTTED => 22-DEC-2014
TIME PLOTTED => 13:41

Dist	COUNTY	ROUTE	POST MILES TOTAL PROJECT	SHEET No.	TOTAL SHEETS
03	Sac	160	L7.0	14	61

Kris M. Albers 11-17-14
REGISTERED CIVIL ENGINEER DATE

11-17-14
PLANS APPROVAL DATE

REGISTERED PROFESSIONAL ENGINEER
KRIS M. ALBERS
No. 49986
Exp. 6-30-15
CIVIL
STATE OF CALIFORNIA

THE STATE OF CALIFORNIA OR ITS OFFICERS OR AGENTS SHALL NOT BE RESPONSIBLE FOR THE ACCURACY OR COMPLETENESS OF SCANNED COPIES OF THIS PLAN SHEET.

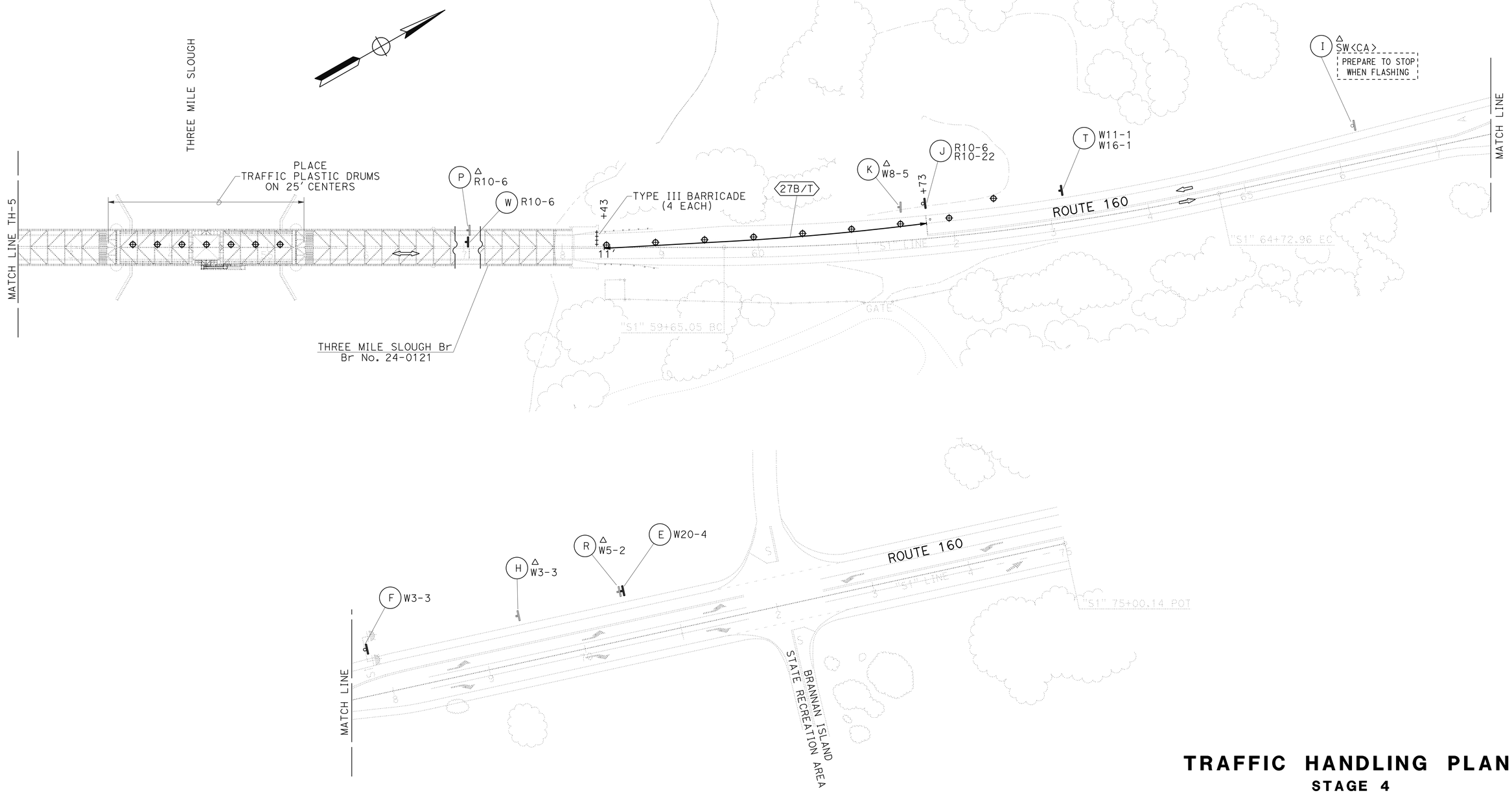

TRAFFIC HANDLING PLAN

STAGE 4

SCALE: 1"=50'

TH-6

APPROVED FOR TRAFFIC HANDLING WORK ONLY

STATE OF CALIFORNIA - DEPARTMENT OF TRANSPORTATION
Caltrans®
TRAFFIC

FUNCTIONAL SUPERVISOR: SERGIO ACEVES
CALCULATED-DESIGNED BY: JACK KEMMERLY
CHECKED BY: KRIS ALBERS
REVISED BY
DATE REVISED

LAST REVISION 9-26-14
DATE PLOTTED => 22-DEC-2014
TIME PLOTTED => 13:41

Dist	COUNTY	ROUTE	POST MILES TOTAL PROJECT	SHEET No.	TOTAL SHEETS
03	Sac	160	L7.0	15	61

Kris M. Albers 11-17-14
REGISTERED CIVIL ENGINEER DATE

11-17-14
PLANS APPROVAL DATE

REGISTERED PROFESSIONAL ENGINEER
KRIS M. ALBERS
No. 49986
Exp. 6-30-15
CIVIL
STATE OF CALIFORNIA

THE STATE OF CALIFORNIA OR ITS OFFICERS OR AGENTS SHALL NOT BE RESPONSIBLE FOR THE ACCURACY OR COMPLETENESS OF SCANNED COPIES OF THIS PLAN SHEET.

ADDITIONAL STATIONARY MOUNTED CONSTRUCTION AREA SIGNS

SIGN LETTER	SIGN CODE	PANEL SIZE	SIGN MESSAGE	NUMBER OF POST AND SIZE	NUMBER OF SIGNS	REMARKS
D	W3-6	48" x 48"	DRAW BRIDGE	1-6" X 6"	1	
E	W20-4	48" x 48"	ONE LANE ROAD AHEAD	1-6" X 6"	2	
F	W3-3	48" x 48"	SIGNAL AHEAD (Symbol)	SEE NOTE 7	2	
G	W3-6		DRAW BRIDGE		1	COVER EXISTING SIGN
H	W3-3		SIGNAL AHEAD (Symbol)		2	COVER EXISTING SIGN
I	SW<CA>		PREPARE TO STOP WHEN FLASHING		2	COVER EXISTING SIGN
J	R10-6 R10-22	24" x 36" 12" x 18"	STOP HERE ON RED ↙ BICYCLE DETECTION (Symbol)	SSBM	2	SEE NOTE 4
K	W8-5		SLIPPERY WHEN WET (Symbol)		2	COVER EXISTING SIGN
L	R1-1		STOP		2	COVER EXISTING SIGN
M	R3-1	36" x 36"	NO RIGHT TURN (Symbol)	SEE NOTE 5	1	
N	R3-2	30" x 30"	NO LEFT TURN (Symbol)	1-4" X 4"	1	
O	R3-5L	30" x 36"	LEFT ONLY (Symbol)	1-4" X 6"	1	
P	R10-6		STOP HERE ON RED ↙		1	COVER EXISTING SIGN
Q	W3-1		STOP AHEAD (Symbol)		1	COVER EXISTING SIGN
R	W5-2		NARROW BRIDGE		1	COVER EXISTING SIGN
S	R3-2	30" x 30"	NO LEFT TURN (Symbol)	SSBM	1	SEE NOTE 6
T	W11-1 W16-1	30" x 30" 24" x 30"	BICYCLE (Symbol) SHARE THE ROAD	1-4" X 6"	2	
U	W1-4R	30" x 30"	REVERSING CURVE (Symbol)	1-4" X 6"	1	
V	W3-3	48" x 48"	SIGNAL AHEAD (Symbol)	1-6" X 6"	1	
W	R10-6	24" x 36"	STOP HERE ON RED ↙	1-4" X 4"	1	
X	R10-11	24" x 30"	NO TURN ON RED ●	1-4" X 4"	1	

NOTES:

1. EXACT SIGN LOCATION TO BE DETERMINED BY THE ENGINEER.
2. ALL SIGN CODES SHOWN ARE FEDERAL SIGN CODES UNLESS OTHERWISE DESIGNATED AS CALIFORNIA SIGN CODES.
3. <CA> = CALIFORNIA SIGN CODE.
4. SIGN PANELS TO BE INSTALLED ON TEMPORARY SIGNAL SYSTEM POLE.
5. SIGN PANEL TO BE INSTALLED ON TEMPORARY SIGNAL SYSTEM SPAN WIRE.
6. SIGN PANEL TO BE INSTALLED ON EXISTING LIGHTING STANDARD.
7. SIGN PANEL TO BE INSTALLED ON TEMPORARY FLASHING BEACON SYSTEM.
8. FOR ADDITIONAL CONSTRUCTION AREA SIGNS, SEE CONSTRUCTION AREA SIGN PLAN.

TRAFFIC HANDLING QUANTITIES

THQ-1

REVISED BY | DATE REVISED
JACK KEMMERLY | KRIS ALBERS
CALCULATED-DESIGNED BY | CHECKED BY
FUNCTIONAL SUPERVISOR | SERGIO ACEVES
STATE OF CALIFORNIA - DEPARTMENT OF TRANSPORTATION
Caltrans
TRAFFIC

LAST REVISION 10-8-14 | DATE PLOTTED => 22-DEC-2014 | TIME PLOTTED => 13:41

Dist	COUNTY	ROUTE	POST MILES TOTAL PROJECT	SHEET No.	TOTAL SHEETS
03	Sac	160	L7.0	16	61

Kris M. Albers 11-17-14
REGISTERED CIVIL ENGINEER DATE

11-17-14
PLANS APPROVAL DATE

REGISTERED PROFESSIONAL ENGINEER KRIS M. ALBERS No. 49986 Exp. 6-30-15 CIVIL STATE OF CALIFORNIA

THE STATE OF CALIFORNIA OR ITS OFFICERS OR AGENTS SHALL NOT BE RESPONSIBLE FOR THE ACCURACY OR COMPLETENESS OF SCANNED COPIES OF THIS PLAN SHEET.

REMOVE THERMOPLASTIC PAVEMENT MARKING

STAGE	"STOP"	"AHEAD"	LIMIT LINE	STAGE TOTAL
	SQFT	SQFT	SQFT	SQFT
1	66	31	20	117
TOTAL				117

TEMPORARY TRAFFIC STRIPE (TAPE)

STAGE	DETAIL NUMBER		STAGE TOTAL
	27B	27C	
	LF	LF	LF
1	660	0	660
2 AND 3	948	21	969
4	906	23	929
TOTAL			2,558

REMOVE YELLOW THERMOPLASTIC TRAFFIC STRIPE (HAZARDOUS WASTE)

STAGE	DETAIL NUMBER	STAGE TOTAL
	22(Mod)	
	LF	LF
1	1,308	1,308
TOTAL		1,308

NOTE:
THE EXISTING CENTERLINE STRIPING PATTERN IS DETAIL 22(Mod) FROM STATION "S1" 47+02 TO "S1" 49+70 AND FROM STATION "S1" 58+12 TO "S1" 61+73.

TEMPORARY PAVEMENT MARKING (TAPE)

STAGE	"SIGNAL"	"AHEAD"	TYPE III ARROW	BICYCLE LOOP DETECTOR	LIMIT LINE	STAGE TOTAL
	SQFT	SQFT	SQFT	SQFT	SQFT	SQFT
1	96	93	42	4	72	307
2 AND 3					11	11
TOTAL						318

PORTABLE CHANGEABLE MESSAGE SIGN

LOCATION				STAGE 1	STAGE 2	STAGE 3	STAGE 4	NUMBER OF PCMS
COUNTY	ROUTE	POST MILE	FACING DIRECTION					
Sac	160	R0.2	SB	X	X	X	X	1
CC	160	L0.4	NB	X	X	X	X	1

NOTES:
1. PCMS LOCATIONS SHOWN ARE APPROXIMATE. EXACT LOCATIONS TO BE DETERMINED BY THE ENGINEER.
2. THE NUMBER OF PCMS SHOWN PER STAGE DOES NOT INCLUDE THOSE REQUIRED BY STANDARD LANE CLOSURES.

REMOVE THERMOPLASTIC TRAFFIC STRIPE

STAGE	DETAIL NUMBER			STAGE TOTAL
	22	27B	27C	
	LF	LF	LF	LF
1	1,210	640	21	1,871
2 AND 3		246	23	269
TOTAL				2,140

NOTE:
THE EXISTING CENTERLINE STRIPING PATTERN IS DETAIL 22 FROM STATION "S1" 50+27 TO "S1" 53+47 AND FROM STATION "S1" 55+27 TO "S1" 58+12.

BARRICADES - DRUMS

STAGE OR LOCATION	TYPE III BARRICADE		TRAFFIC PLASTIC DRUM	
	FURNISH	INSTALL	FURNISH	INSTALL
	EACH		EACH	
1	8	8	22	22
2 AND 3	0	8	0	21
4	0	8	0	22
TOTAL	8	———	22	———

TRAFFIC HANDLING QUANTITIES

THQ-2

STATE OF CALIFORNIA - DEPARTMENT OF TRANSPORTATION
Caltrans
TRAFFIC

FUNCTIONAL SUPERVISOR: SERGIO ACEVES
CALCULATED-DESIGNED BY: JACK KEMMERLY
CHECKED BY: KRIS ALBERS
REVISED BY
DATE REVISED

LAST REVISION 10-1-14
DATE PLOTTED => 22-DEC-2014
TIME PLOTTED => 13:41

Dist	COUNTY	ROUTE	POST MILES TOTAL PROJECT	SHEET No.	TOTAL SHEETS
03	Sac	160	L7.0	17	61

Kris M. Albers 11-17-14
REGISTERED CIVIL ENGINEER DATE

11-17-14
PLANS APPROVAL DATE

REGISTERED PROFESSIONAL ENGINEER
KRIS M. ALBERS
No. 49986
Exp. 6-30-15
CIVIL
STATE OF CALIFORNIA

THE STATE OF CALIFORNIA OR ITS OFFICERS OR AGENTS SHALL NOT BE RESPONSIBLE FOR THE ACCURACY OR COMPLETENESS OF SCANNED COPIES OF THIS PLAN SHEET.

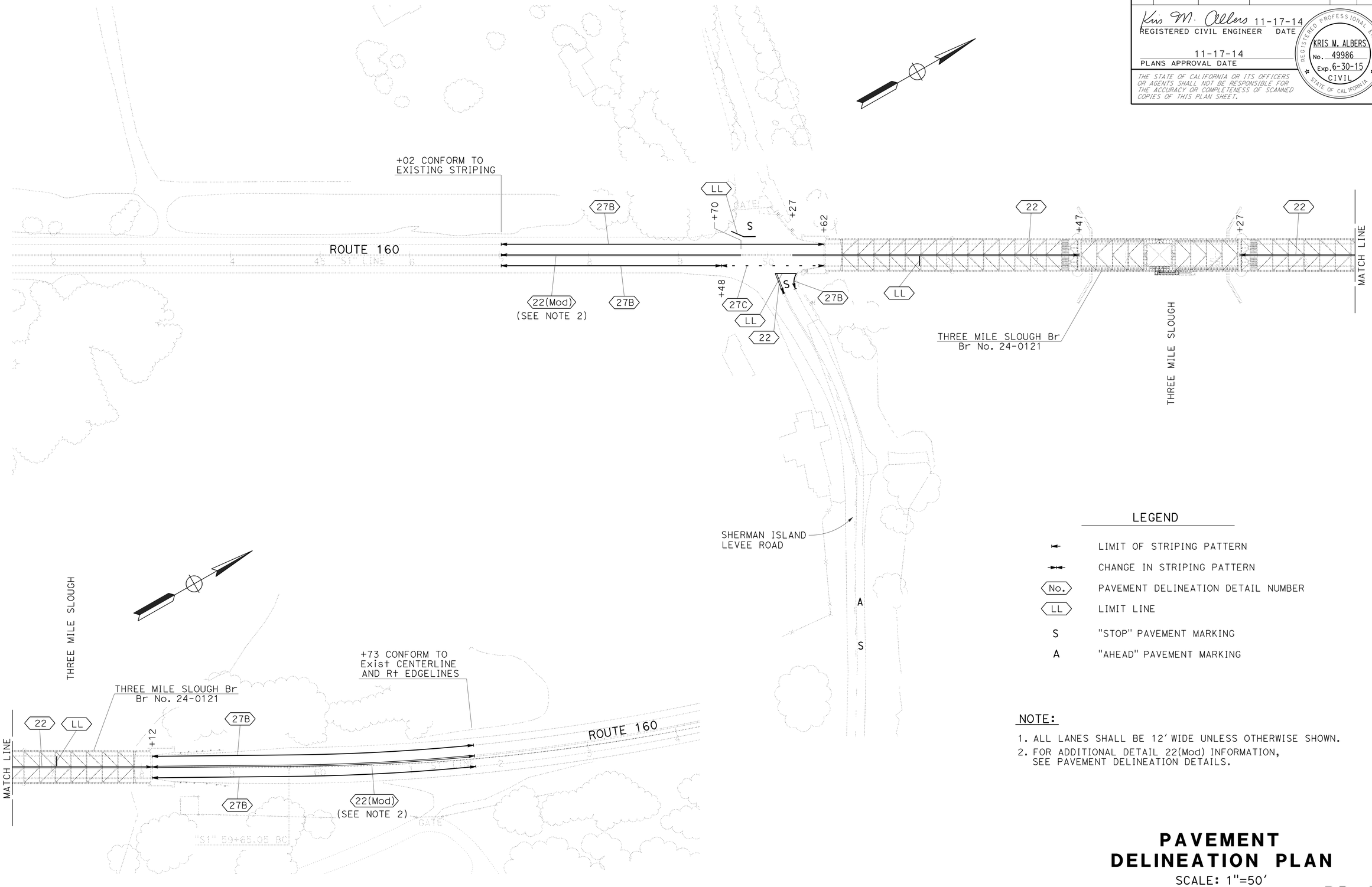

LEGEND

⊢	LIMIT OF STRIPING PATTERN
⊢⊣	CHANGE IN STRIPING PATTERN
⟨No.⟩	PAVEMENT DELINEATION DETAIL NUMBER
⟨LL⟩	LIMIT LINE
S	"STOP" PAVEMENT MARKING
A	"AHEAD" PAVEMENT MARKING

NOTE:

1. ALL LANES SHALL BE 12' WIDE UNLESS OTHERWISE SHOWN.
2. FOR ADDITIONAL DETAIL 22(Mod) INFORMATION, SEE PAVEMENT DELINEATION DETAILS.

PAVEMENT DELINEATION PLAN

SCALE: 1"=50'

PD-1

APPROVED FOR PAVEMENT DELINEATION WORK ONLY

STATE OF CALIFORNIA - DEPARTMENT OF TRANSPORTATION
Caltrans®
TRAFFIC

FUNCTIONAL SUPERVISOR: SERGIO ACEVES
CALCULATED-DESIGNED BY: JACK KEMMERLY
CHECKED BY: KRIS ALBERS
REVISED BY
DATE REVISED

LAST REVISION 9-24-14
DATE PLOTTED => 22-DEC-2014
TIME PLOTTED => 13:41

Dist	COUNTY	ROUTE	POST MILES TOTAL PROJECT	SHEET No.	TOTAL SHEETS
03	Sac	160	L7.0	18	61

Kris M. Albers 11-17-14
REGISTERED CIVIL ENGINEER DATE

11-17-14
PLANS APPROVAL DATE

REGISTERED PROFESSIONAL ENGINEER
KRIS M. ALBERS
No. 49986
Exp. 6-30-15
CIVIL
STATE OF CALIFORNIA

THE STATE OF CALIFORNIA OR ITS OFFICERS OR AGENTS SHALL NOT BE RESPONSIBLE FOR THE ACCURACY OR COMPLETENESS OF SCANNED COPIES OF THIS PLAN SHEET.

LEGEND

TYPE D TWO-WAY YELLOW PAVEMENT MARKER (RETROREFLECTIVE)

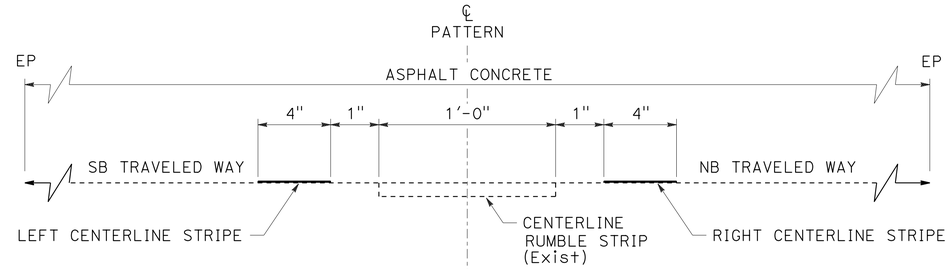

SECTION A-A

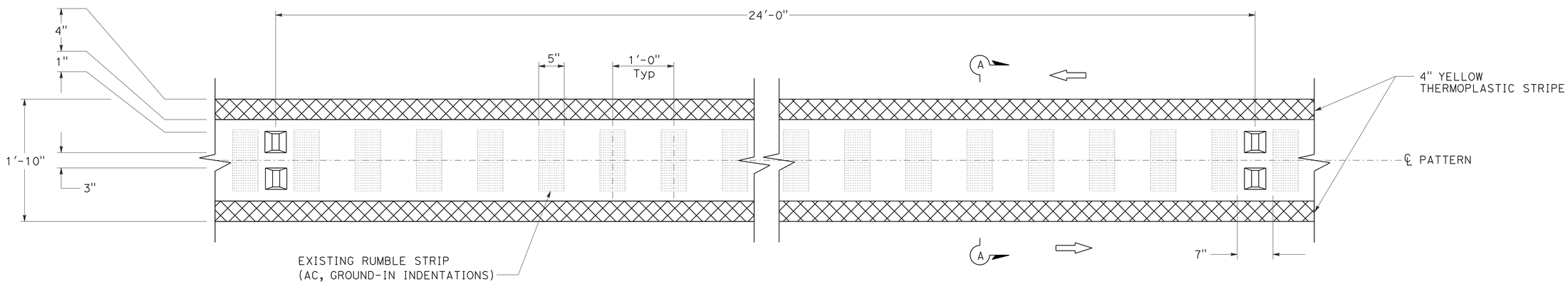

DETAIL 22(Mod) (TYPICAL)

ROADWAY CENTERLINE DETAIL

4" THERMOPLASTIC TRAFFIC STRIPE

DETAIL NUMBER	LINEAR FEET
22	1,260
22(Mod)	1,258
27B	1,353
TOTAL	3,871

NOTES:

1. THE LIMITS OF DETAIL 22 ARE FROM STATION "S1" 50+27 TO 53+47 AND FROM STATION "S1" 55+27 TO "S1" 58+12.
2. THE LIMITS OF DETAIL 22(Mod) ARE FROM STATION "S1" 47+02 TO 49+70 AND FROM STATION "S1" 58+12 TO "S1" 61+73.

4" THERMOPLASTIC TRAFFIC STRIPE (BROKEN 12-3)

DETAIL NUMBER	LINEAR FEET
27C	114
TOTAL	114

PAVEMENT MARKER (RETROREFLECTIVE)

DETAIL NUMBER	TYPE D (EACH)
22	56
22(Mod)	52
TOTAL	108

THERMOPLASTIC PAVEMENT MARKING

DESCRIPTION	NUMBER	SQUARE FEET
"STOP"	3	66
"AHEAD"	1	31
LIMIT LINE	4	74
TOTAL		171

APPROVED FOR PAVEMENT DELINEATION WORK ONLY

PAVEMENT DELINEATION DETAILS AND QUANTITIES

NO SCALE

PDD-1

STATE OF CALIFORNIA - DEPARTMENT OF TRANSPORTATION
Caltrans
TRAFFIC

FUNCTIONAL SUPERVISOR: SERGIO ACEVES
CALCULATED-DESIGNED BY: JACK KEMMERLY
CHECKED BY: KRIS ALBERS
REVISED BY
DATE REVISED

LAST REVISION 9-24-14
DATE PLOTTED => 22-DEC-2014
TIME PLOTTED => 13:41

Dist	COUNTY	ROUTE	POST MILES TOTAL PROJECT	SHEET No.	TOTAL SHEETS
03	Sac	160	L7.0	19	61

M. A. Panchesson 11-17-14
REGISTERED CIVIL ENGINEER DATE

11-17-14
PLANS APPROVAL DATE

REGISTERED PROFESSIONAL ENGINEER
M.A. PANCHESSON
No. 44125
Exp. 6-30-15
CIVIL
STATE OF CALIFORNIA

THE STATE OF CALIFORNIA OR ITS OFFICERS OR AGENTS SHALL NOT BE RESPONSIBLE FOR THE ACCURACY OR COMPLETENESS OF SCANNED COPIES OF THIS PLAN SHEET.

TEMPORARY ROADWAY ITEMS

STAGE	LINE	STATION	Lt/Rt OR ON ℄	Temp RAILING (TYPE K)	ALTERNATIVE TEMPORARY CRASH CUSHION
				LF	EA
1	"S1"	50+65 TO 53+05	℄	240	
1	"S1"	55+70 TO 58+10	℄	240	
1	"S1"	50+65, 53+05, 55+70, 58+10	℄		4
		TOTAL		480	4

SUMMARY OF QUANTITIES

NO SCALE

Q-1

STATE OF CALIFORNIA - DEPARTMENT OF TRANSPORTATION
Caltrans® DIVISION OF ENGINEERING

FUNCTIONAL SUPERVISOR: ALI KIANI

CALCULATED-DESIGNED BY: DON WEHRLY
CHECKED BY: MIKE PANCHESSON

REVISED BY
DATE REVISED

LAST REVISION 00-00-00
DATE PLOTTED => 22-DEC-2014
TIME PLOTTED => 13:41

Dist	COUNTY	ROUTE	POST MILES TOTAL PROJECT	SHEET No.	TOTAL SHEETS
03	Sac	160	L7.0	20	61

R. P. Gill 11-17-14
REGISTERED ELECTRICAL ENGINEER DATE

11-17-14
PLANS APPROVAL DATE

REGISTERED PROFESSIONAL ENGINEER
RUPINDER PAL GILL
No. 16642
Exp. 06-30-16
ELECTRICAL
STATE OF CALIFORNIA

THE STATE OF CALIFORNIA OR ITS OFFICERS OR AGENTS SHALL NOT BE RESPONSIBLE FOR THE ACCURACY OR COMPLETENESS OF SCANNED COPIES OF THIS PLAN SHEET.

NOTES:

1. FOR ACCURATE RIGHT OF WAY DATA, CONTACT RIGHT OF WAY ENGINEERING AT THE DISTRICT OFFICE.
2. INSTALL ELECTRICAL EQUIPMENT AND TEMPORARY WOOD POLES AT MINIMUM 20′ FROM ETW OR AS DIRECTED BY THE ENGINEER.
3. PROVIDE 25′ MINIMUM VERTICAL CLEARANCE FOR OVERHEAD CONDUCTOR.
4. TEMPORARY WOOD POLES WITH LUMINAIRE SHALL BE INSTALLED AT MINIMUM 15′ FROM ETW OR AS DIRECTED BY THE ENGINEER.
5. EXISTING UTILITY FACLITIES HAVE NOT BEEN INCLUDED ON THESE PLANS.
6. REMOVE ALL TEMPORARY EQUIPMENT AND BACKFILL POLE HOLES AFTER COMPLETION OF WORK AND AS DIRECTED BY THE ENGINEER.

LEGEND (THIS SHEET):

1. INSTALL TYPE D LOOP DETECTOR FOR BT.
2. MESSENGER CABLE, 4#8, 1#8G, 1 VIVDS CABLE, 4#12, 1DLC.
3. MESSENGER CABLE, 2#8, 1#8G, 1 VIVDS CABLE.
4. MESSENGER CABLE, 2#8, 1#8G.

SYMBOL:

310 WATT HPS LUMINAIRE ON WOOD POLE

ABBREVIATIONS:

PG&E	PACIFIC GAS AND ELECTRIC
BT	BICYCLE TRAFFIC

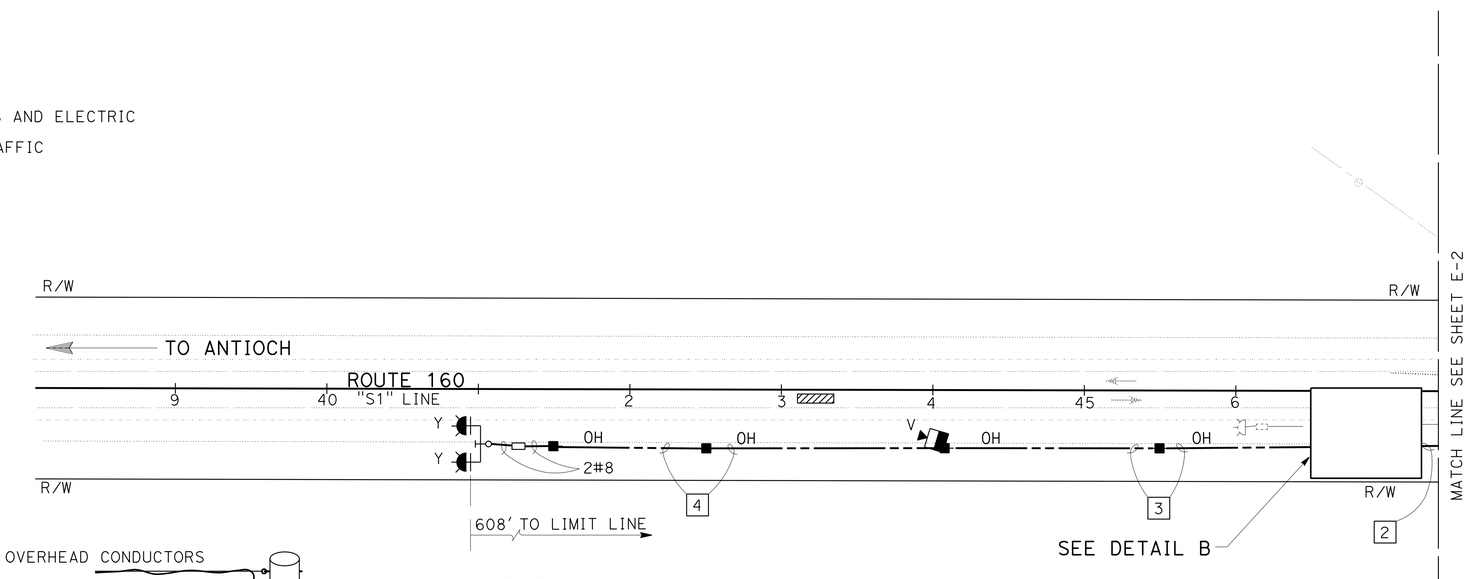

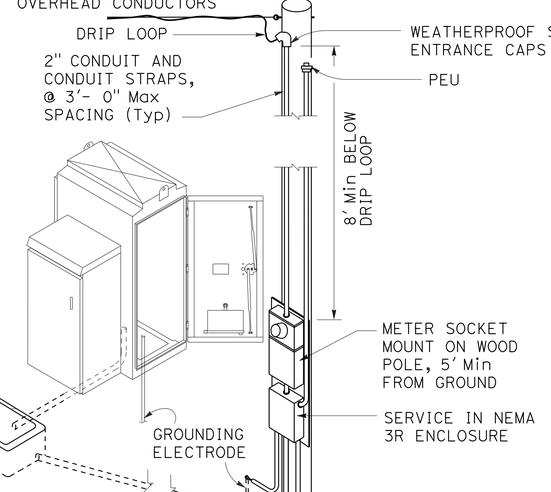

TEMPORARY MODEL 332L CABINET, BBS AND SERVICE

DETAIL "A"

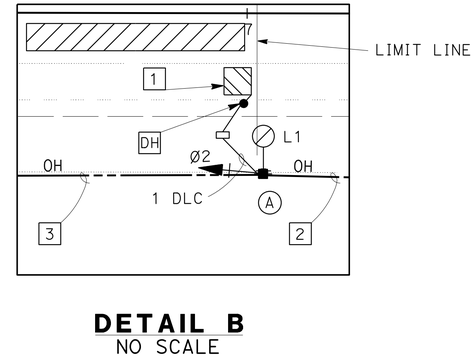

DETAIL B
NO SCALE

TEMPORARY SIGNAL SYSTEM

SCALE: 1" = 50′

E-1

APPROVED FOR ELECTRICAL WORK ONLY

STATE OF CALIFORNIA - DEPARTMENT OF TRANSPORTATION
Caltrans®
ELECTRICAL DESIGN

FUNCTIONAL SUPERVISOR: MARY ANN HUDSPETH
CALCULATED-DESIGNED BY: ALI HASSANI
CHECKED BY: RUPINDER PAL GILL
REVISED BY
DATE REVISED

LAST REVISION 00-00-00
DATE PLOTTED => 22-DEC-2014
TIME PLOTTED => 13:41

Dist	COUNTY	ROUTE	POST MILES TOTAL PROJECT	SHEET No.	TOTAL SHEETS
03	Sac	160	L7.0	21	61

R. P. Gill 11-17-14
REGISTERED ELECTRICAL ENGINEER DATE

11-17-14
PLANS APPROVAL DATE

REGISTERED PROFESSIONAL ENGINEER
RUPINDER PAL GILL
No. 16642
Exp. 06-30-16
ELECTRICAL
STATE OF CALIFORNIA

THE STATE OF CALIFORNIA OR ITS OFFICERS OR AGENTS SHALL NOT BE RESPONSIBLE FOR THE ACCURACY OR COMPLETENESS OF SCANNED COPIES OF THIS PLAN SHEET.

NOTE:

FOR ACCURATE RIGHT OF WAY DATA, CONTACT RIGHT OF WAY ENGINEERING AT THE DISTRICT OFFICE.

LEGEND (THIS SHEET):

1. 1 MESSENGER CABLE, 2#6, 1#6G, 4#8, 1#8G.
2. INSTALL DEPARTMENT-FURNISHED MODEL 2070E CONTROLLER ASSEMBLY AND DEPARTMENT-FURNISHED MODEL 332L CABINET. INSTALL BBS. RS AT COMPLETION OF WORK.
3. MESSENGER CABLE, 2 VIVDS CABLE, 4#12, 4#8, 1#8G, 1DLC.
4. MESSENGER CABLE, 4#12, 1 VIVDS CABLE, 4#8, 1#8G, 1DLC.
5. MESSENGER CABLE, 4#12.
6. MESSENGER CABLE, 7#12, 4#8, 1#8G, 3 VIVDS CABLE, 1DLC.
7. 1 MESSENGER CABLE, 4#8, 1#8G, 12#12, 3 VIVDS CABLE, 1 DLC, 1 SIC
   1 MESSENGER CABLE, 2#6, 1#6G
8. MESSENGER CABLE, 7#12.
9. 3-2"C, 12#12, 4 VIVDS CABLE, 1 SIC, 4#8, 1#8G, 1DLC.
10. INSTALL MESSENGER CABLES WITH A MINIMUM OF 12" SEPARATION.
11. INSTALL TYPE E SERVICE EQUIPMENT ENCLOSURE PER STANDARD PLANS ES-2A. PROVIDE ITEMS 1 THRU 8, 13, 15, 16 15 A, 17, 20 THRU 23 PER RSP ES-2D.
12. FOR SERVICE INSTALLATION, SEE DETAIL "A" ON SHEET E-1.
13. 2"C, TYPE 1, 1 SIC, 4#8, 1#8G, 2#12.

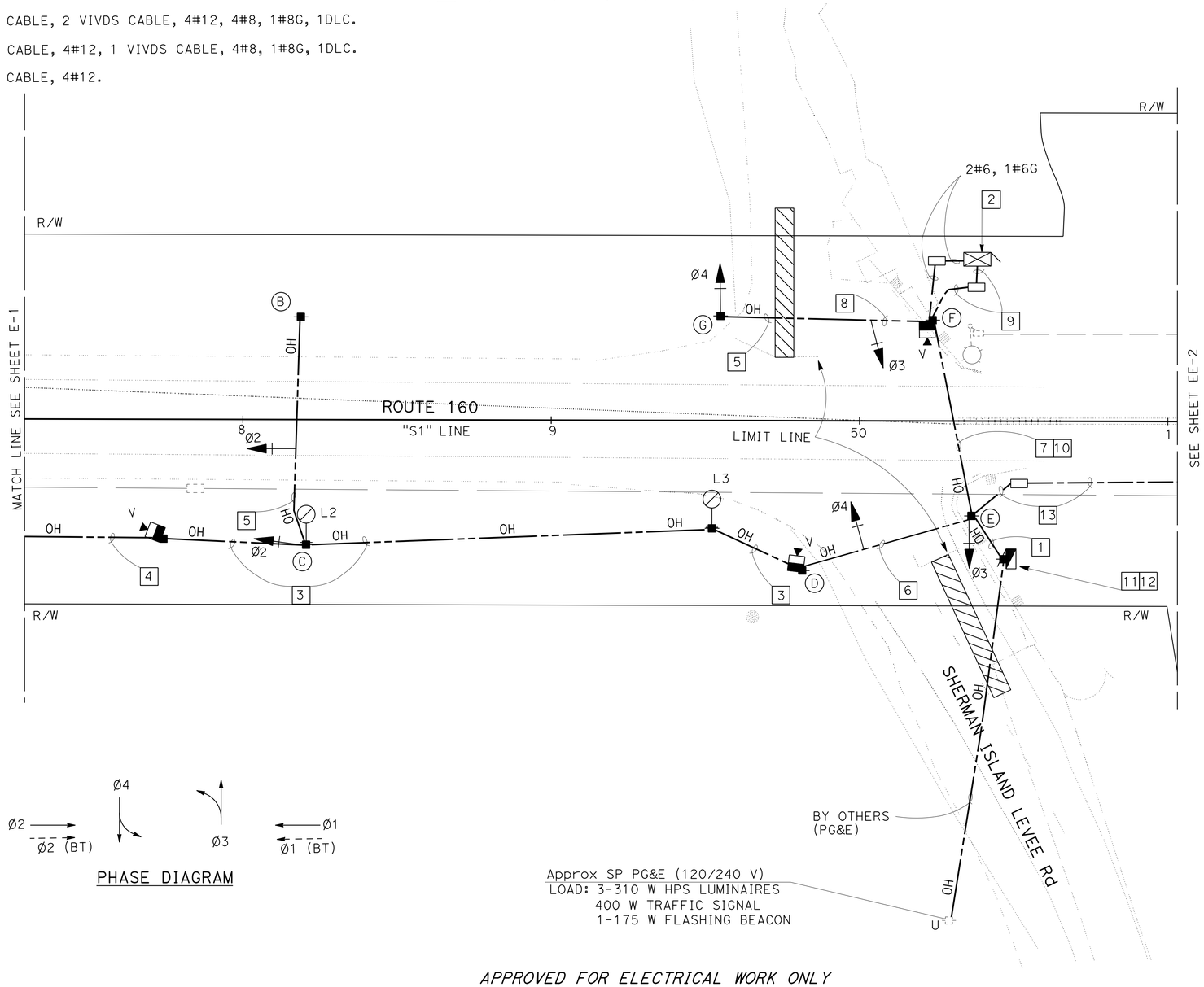

PHASE DIAGRAM

APPROVED FOR ELECTRICAL WORK ONLY

TEMPORARY SIGNAL SYSTEM

SCALE: 1" = 20'

E-2

STATE OF CALIFORNIA - DEPARTMENT OF TRANSPORTATION
Caltrans®
ELECTRICAL DESIGN

FUNCTIONAL SUPERVISOR: MARY ANN HUDSPETH
CALCULATED-DESIGNED BY: ALI HASSANI
CHECKED BY: RUPINDER PAL GILL
REVISED BY
DATE REVISED

LAST REVISION 00-00-00
DATE PLOTTED => 22-DEC-2014
TIME PLOTTED => 13:41

Dist	COUNTY	ROUTE	POST MILES TOTAL PROJECT	SHEET No.	TOTAL SHEETS
03	Sac	160	L7.0	22	61

R. P. Gill 11-17-14
REGISTERED ELECTRICAL ENGINEER DATE

11-17-14
PLANS APPROVAL DATE

REGISTERED PROFESSIONAL ENGINEER
RUPINDER PAL GILL
No. 16642
Exp. 06-30-16
ELECTRICAL
STATE OF CALIFORNIA

THE STATE OF CALIFORNIA OR ITS OFFICERS OR AGENTS SHALL NOT BE RESPONSIBLE FOR THE ACCURACY OR COMPLETENESS OF SCANNED COPIES OF THIS PLAN SHEET.

NOTE:

FOR ACCURATE RIGHT OF WAY DATA, CONTACT RIGHT OF WAY ENGINEERING AT THE DISTRICT OFFICE.

LEGEND (THIS SHEET):

1. 2#6, 1#6G
2. INSTALL DEPARTMENT-FURNISHED MODEL 2070E CONTROLLER ASSEMBLY AND DEPARTMENT-FURNISHED MODEL 332L CABINET. INSTALL BBS. RS AT COMPLETION OF WORK.
3. 2"C, 2 VIVDS CABLE, 1 DLC, 1 SIC.
4. 1 MESSENGER CABLE, 4#8, 1#8G, 2 VIVDS CABLE, 1 DLC.
   1 MESSENGER CABLE, 4#8, 1#8G.
5. MESSENGER CABLE, 2#8, 1#8, 1 VIVDS CABLE.
6. INSTALL TYPE E SERVICE EQUIPMENT ENCLOSURE PER STANDARD PLANS ES-2A. PROVIDE ITEMS (1) THRU (8), (13), (15), (16) 15 A, (17), (20) THRU (23) PER RSP ES-2D.
7. FOR SERVICE INSTALLATION, SEE DETAIL "A" ON SHEET E-1.
8. 1 MESSENGER CABLE, 4#8, 1#8G, 1 VIVDS CABLE, 1 DLC.
   1 MESSENGER CABLE, 4#8, 1#8G.
9. MESSENGER CABLE, 4#8, 1#8G, 1 SIC
10. INSTALL TYPE D LOOP DETECTOR FOR BT.
11. 1 MESSENGER CABLE, 2 VIVDS CABLE, 1 DLC.
    1 MESSENGER CABLE, 4#8, 1#8G.
12. INSTALL MESSENGER CABLES WITH A MINIMUM OF 12" SEPARATION.
13. 2"C, TYPE 1, 4#8, 1#8G, 1 SIC

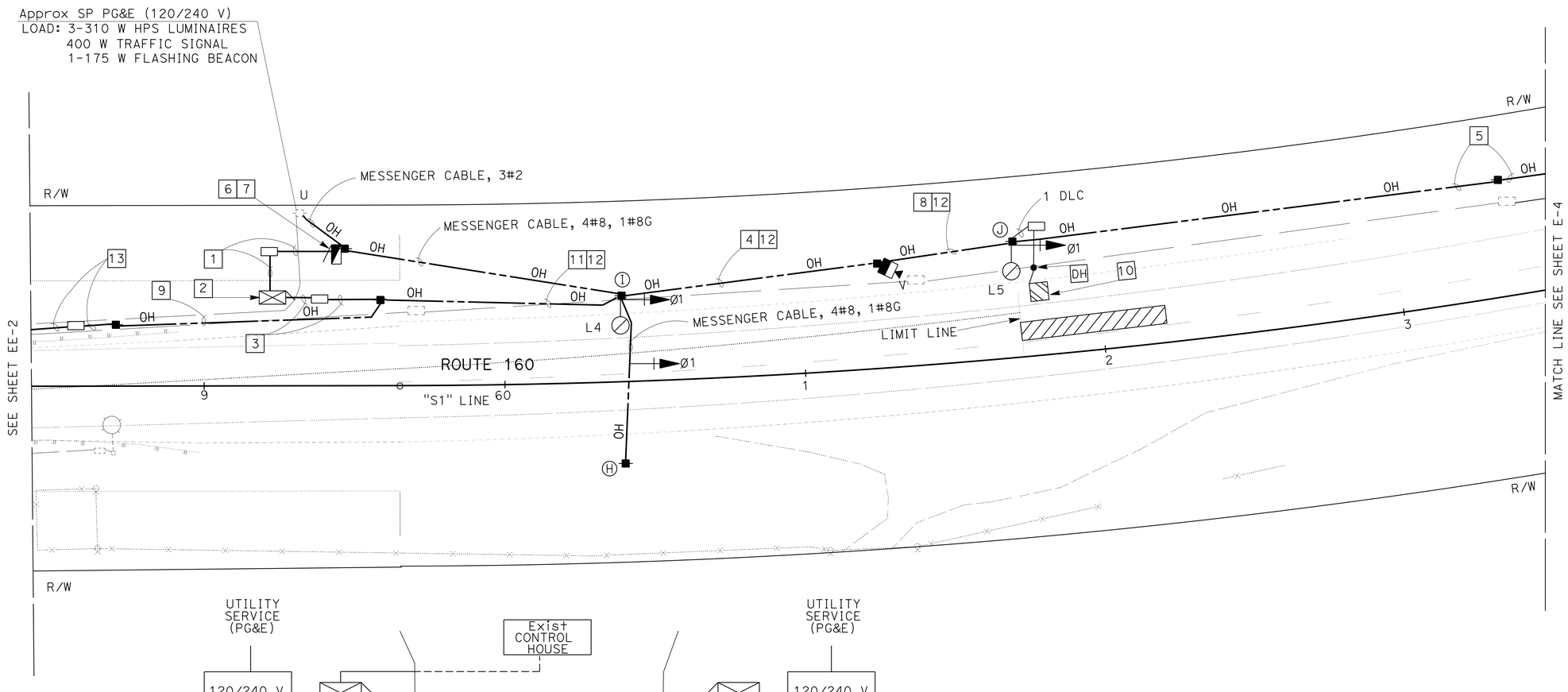

WIRING DIAGRAM

TEMPORARY SIGNAL SYSTEMS

SCALE: 1" = 20'

E-3

APPROVED FOR ELECTRICAL WORK ONLY

STATE OF CALIFORNIA - DEPARTMENT OF TRANSPORTATION
Caltrans
ELECTRICAL DESIGN

FUNCTIONAL SUPERVISOR: MARY ANN HUDSPETH
CALCULATED-DESIGNED BY: ALI HASSANI
CHECKED BY: RUPINDER PAL GILL
REVISED BY
DATE REVISED

LAST REVISION 00-00-00
DATE PLOTTED => 22-DEC-2014
TIME PLOTTED => 13:41

Dist	COUNTY	ROUTE	POST MILES TOTAL PROJECT	SHEET No.	TOTAL SHEETS
03	Sac	160	L7.0	23	61

R. P. Gill 11-17-14
REGISTERED ELECTRICAL ENGINEER DATE

11-17-14
PLANS APPROVAL DATE

REGISTERED PROFESSIONAL ENGINEER
RUPINDER PAL GILL
No. 16642
Exp. 06-30-16
ELECTRICAL
STATE OF CALIFORNIA

THE STATE OF CALIFORNIA OR ITS OFFICERS OR AGENTS SHALL NOT BE RESPONSIBLE FOR THE ACCURACY OR COMPLETENESS OF SCANNED COPIES OF THIS PLAN SHEET.

NOTE:

FOR ACCURATE RIGHT OF WAY DATA, CONTACT RIGHT OF WAY ENGINEERING AT THE DISTRICT OFFICE.

LEGEND (THIS SHEET):

1 MESSENGER CABLE, 2#8, 1#8G, 1 VIVDS CABLE.

2 MESSENGER CABLE, 2#8, 1#8G.

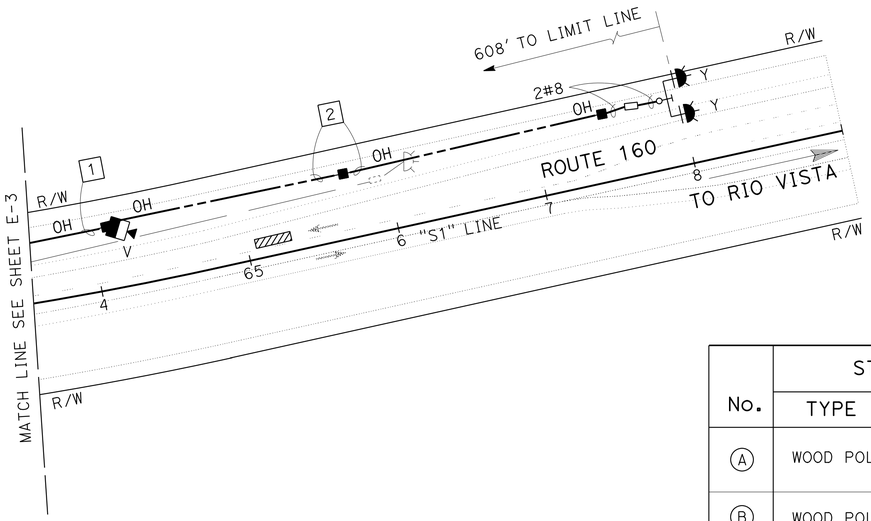

POLE AND EQUIPMENT SCHEDULE

No.	STANDARD TYPE	STANDARD LMA	Veh Sig Mtg Ø	Veh Sig Mtg SPAN WIRE	Veh Sig Mtg Pole	HPS LUMINAIRE	SPECIAL EQUIPMENT
A	WOOD POLE	15'	2		SV-1-T	310 W	
B	WOOD POLE						
C	WOOD POLE	15'	2	SW-3	SV-1-T	310 W	
D	WOOD POLE		4	SW-3			VIVDS CAMERA
E	WOOD POLE		3		SV-1-T		
F	WOOD POLE		3	SW-3			VIVDS CAMERA
G	WOOD POLE		4		SV-1-T		
H	WOOD POLE						
I	WOOD POLE	15'	1	SW-3	SV-1-T	310 W	
J	WOOD POLE	15'	1		SV-1-T	310 W	

TEMPORARY SIGNAL SYSTEM

SCALE: 1" = 50'

E-4

APPROVED FOR ELECTRICAL WORK ONLY

STATE OF CALIFORNIA - DEPARTMENT OF TRANSPORTATION
Caltrans
ELECTRICAL DESIGN

FUNCTIONAL SUPERVISOR: MARY ANN HUDSPETH
CALCULATED-DESIGNED BY: ALI HASSANI
CHECKED BY: RUPINDER PAL GILL
REVISED BY
DATE REVISED

LAST REVISION 00-00-00
DATE PLOTTED => 22-DEC-2014
TIME PLOTTED => 13:42

Dist	COUNTY	ROUTE	POST MILES TOTAL PROJECT	SHEET No.	TOTAL SHEETS
03	Sac	160	L7.0	24	61

R. P. Gill 11-17-14
REGISTERED ELECTRICAL ENGINEER DATE

11-17-14
PLANS APPROVAL DATE

REGISTERED PROFESSIONAL ENGINEER
RUPINDER PAL GILL
No. 16642
Exp. 06-30-16
ELECTRICAL
STATE OF CALIFORNIA

THE STATE OF CALIFORNIA OR ITS OFFICERS OR AGENTS SHALL NOT BE RESPONSIBLE FOR THE ACCURACY OR COMPLETENESS OF SCANNED COPIES OF THIS PLAN SHEET.

NOTES (THIS SHEET):

1. TYPE A REFERS TO BBS EQUIPMENT FROM MANUFACTURER A.
2. TYPE B REFERS TO BBS EQUIPMENT FROM MANUFACTURER B.
3. CASE-1 REFERS TO THE SITUATION WHEN THE ENTIRE BBS EQUIPMENT INCLUDING THE BATTERIES ARE INSTALLED IN THE BBS CABINET.
4. CASE-2 REFERS TO THE SITUATION WHEN ONLY THE BATTERIES ARE INSTALLED IN THE BBS CABINET. THE REMAINING EQUIPMENT IS PLACED IN THE 332L CONTROLLER CABINET (CASE-2 IS NOT USED).
5. THE LOCATION OF 1½" NIPPLE WILL BE DETERMINED BY THE ENGINEER IN THE FIELD.
6. CONTRACTOR SHALL FURNISH AND INSTALL NEMA-1 ENCLOSURE WITH 30A, 1P, 120/240 VOLTS RATED CIRCUIT BREAKER MANUFACTURED PER U.L. STANDARD 489.
7. TEMPERATURE PROBE SHALL BE ATTACHED TO THE BATTERY BY TAPE OR ATTACHED TO THE NEGATIVE TERMINAL OF THE BATTERY.
8. THE ELECTRICAL POWER FOR THE COOLING FAN FOR BBS CABINET SHALL BE TAPPED FROM THE BOTTOM OF TBS IN 332L CABINET.

ABBREVIATIONS (THIS SHEET):

BBS = BATTERY BACKUP SYSTEM
PTS = POWER TRANSFER SWITCH
PTR = POWER TRANSFER RELAY
UPS = UNINTERRUPTIBLE POWER SUPPLY
UPSC= UNINTERRUPTIBLE POWER SUPPLY CONTROLLER
UPSM= UPS MODE
BP = BYPASS
BPC = BYPASS CONTROL
MBPS= MANUAL BYPASS SWITCH
MBJ = MAIN BONDING JUMPER
AC+ = UNGROUNDED CONDUCTOR
AC- = GROUNDED CONDUCTOR
EG = EQUIPMENT GROUND
C = COMMON
GRN = GREEN
BLK = BLACK
DF = DEPARTMENT FURNISHED

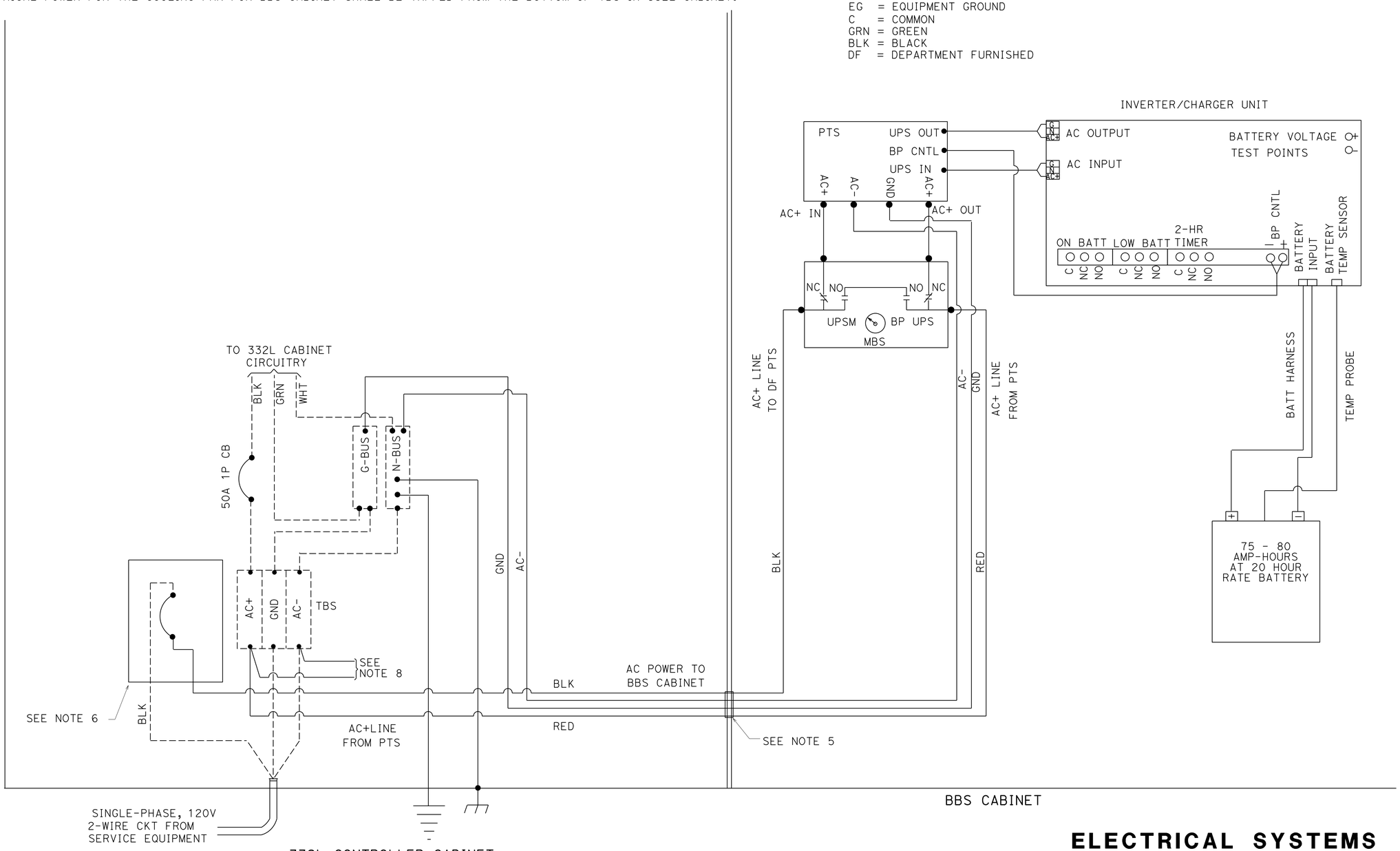

ELECTRICAL SYSTEMS
(BBS POWER CONNECTION DIAGRAM, TYPE A, CASE-1)

NO SCALE

E-5

STATE OF CALIFORNIA - DEPARTMENT OF TRANSPORTATION
Caltrans® ELECTRICAL DESIGN
FUNCTIONAL SUPERVISOR: MARY ANN HUDSPETH
CALCULATED-DESIGNED BY / CHECKED BY
DIVISION OF TRAFFIC OPERATIONS
REVISED BY / DATE REVISED

LAST REVISION 00-00-00 | DATE PLOTTED => 22-DEC-2014 | TIME PLOTTED => 13:42

Dist	COUNTY	ROUTE	POST MILES TOTAL PROJECT	SHEET No.	TOTAL SHEETS
03	Sac	160	L7.0	25	61

R. P. Gill 11-17-14
REGISTERED ELECTRICAL ENGINEER DATE

11-17-14
PLANS APPROVAL DATE

REGISTERED PROFESSIONAL ENGINEER
RUPINDER PAL GILL
No. 16642
Exp. 06-30-16
ELECTRICAL
STATE OF CALIFORNIA

THE STATE OF CALIFORNIA OR ITS OFFICERS OR AGENTS SHALL NOT BE RESPONSIBLE FOR THE ACCURACY OR COMPLETENESS OF SCANNED COPIES OF THIS PLAN SHEET.

NOTES (THIS SHEET):

1. TYPE A REFERS TO BBS EQUIPMENT FROM MANUFACTURER A.
2. TYPE B REFERS TO BBS EQUIPMENT FROM MANUFACTURER B.
3. CASE-1 REFERS TO THE SITUATION WHEN THE ENTIRE BBS EQUIPMENT INCLUDING THE BATTERIES ARE INSTALLED IN THE BBS CABINET.
4. CASE-2 REFERS TO THE SITUATION WHEN ONLY THE BATTERIES ARE INSTALLED IN THE BBS CABINET. THE REMAINING EQUIPMENT IS PLACED IN THE 332L CONTROLLER CABINET (CASE-2 IS NOT USED).
5. THE LOCATION OF 1½" NIPPLE WILL BE DETERMINED BY THE ENGINEER IN THE FIELD.
6. CONTRACTOR SHALL FURNISH AND INSTALL NEMA-1 ENCLOSURE WITH 30A, 1P, 120/240 VOLTS RATED CIRCUIT BREAKER MANUFACTURED PER U.L. STANDARD 489.
7. TEMPERATURE PROBE SHALL BE ATTACHED TO THE BATTERY BY TAPE OR ATTACHED TO THE NEGATIVE TERMINAL OF THE BATTERY.
8. THE ELECTRICAL POWER FOR THE COOLING FAN FOR BBS CABINET SHALL BE TAPPED FROM THE BOTTOM OF TBS IN 332L CABINET.

ABBREVIATIONS (THIS SHEET):

BBS = BATTERY BACKUP SYSTEM
PTS = POWER TRANSFER SWITCH
PTR = POWER TRANSFER RELAY
UPS = UNINTERRUPTIBLE POWER SUPPLY
UPSC= UNINTERRUPTIBLE POWER SUPPLY CONTROLLER
UPSM= UPS MODE
BP = BYPASS
BPC = BYPASS CONTROL
MBPS= MANUAL BYPASS SWITCH
MBJ = MAIN BONDING JUMPER
AC+ = UNGROUNDED CONDUCTOR
AC- = GROUNDED CONDUCTOR
EG = EQUIPMENT GROUND
C = COMMON
GRN = GREEN
BLK = BLACK
DF = DEPARTMENT FURNISHED

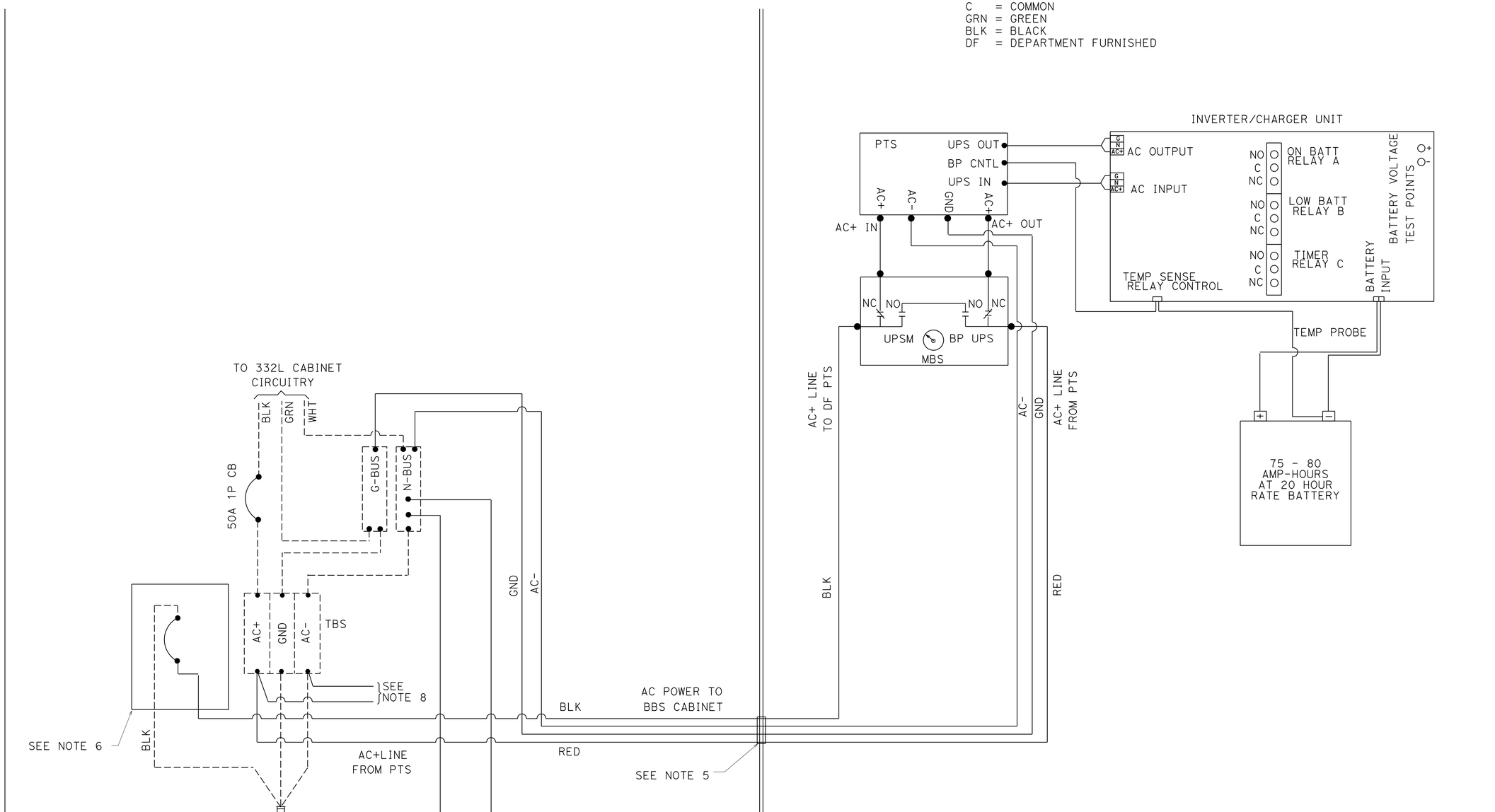

ELECTRICAL SYSTEMS
(BBS POWER CONNECTION DIAGRAM, TYPE B, CASE-1)

NO SCALE

E-6

STATE OF CALIFORNIA - DEPARTMENT OF TRANSPORTATION
Caltrans® ELECTRICAL DESIGN
FUNCTIONAL SUPERVISOR: MARY ANN HUDSPETH
DIVISION OF TRAFFIC OPERATIONS
CALCULATED-DESIGNED BY / CHECKED BY
REVISED BY / DATE REVISED

LAST REVISION 00-00-00 | DATE PLOTTED => 22-DEC-2014 | TIME PLOTTED => 13:42

Dist	COUNTY	ROUTE	POST MILES TOTAL PROJECT	SHEET No.	TOTAL SHEETS
03	Sac	160	L7.0	26	61

R. P. Gill 11-17-14
REGISTERED ELECTRICAL ENGINEER DATE

11-17-14
PLANS APPROVAL DATE

REGISTERED PROFESSIONAL ENGINEER
RUPINDER PAL GILL
No. 16642
Exp. 06-30-16
ELECTRICAL
STATE OF CALIFORNIA

THE STATE OF CALIFORNIA OR ITS OFFICERS OR AGENTS SHALL NOT BE RESPONSIBLE FOR THE ACCURACY OR COMPLETENESS OF SCANNED COPIES OF THIS PLAN SHEET.

NOTE:
ITEMS SHOWN IN TABLE ARE NOT SEPARATE PAY ITEMS, FOR INFORMATION ONLY.

TEMPORARY SIGNAL SYSTEM

SHEET No.	WOOD POLE	VIVDS CAMERA	VIVDS CABLE	2" C	2"C TYPE 1	1½" C	TYPE E SERVICE CABINET	CONTROLLER CABINET	BBS	TYPE 15-FBS	CONDUCTOR #2	CONDUCTOR #6	CONDUCTOR #8	CONDUCTOR #12	SIC	MESSENGER CABLE	310 W HPS LUMINAIRE	PB	DETECTOR HANDHOLE	DLC	TYPE D LOOP
	EA	EA	FT	FT	FT	FT	EA	EA	EA	EA	FT	FT	FT	FT	FT	FT	EA	EA	EA	FT	EA
E-1	5	1	300			50				1			1800	100		600	1	2	1	50	1
E-2	9	3	1000	60	60	50	1	1	1		600	600	2000	2000	300	800	2	3		500	
E-3	8	1	800	50	50	20	1	1	1		150	50	3500		200	650	2	4	1	300	1
E-4	3	1	100			30				1			1100			350		1			

ELECTRICAL QUANTITIES

E-7

REVISED BY | DATE REVISED
ALI HASSANI | RUPINDER PAL GILL
CALCULATED-DESIGNED BY | CHECKED BY
FUNCTIONAL SUPERVISOR | MARY ANN HUDSPETH
STATE OF CALIFORNIA - DEPARTMENT OF TRANSPORTATION
Caltrans
ELECTRICAL DESIGN

LAST REVISION 00-00-00 | DATE PLOTTED => 22-DEC-2014 | TIME PLOTTED => 13:42

Dist	COUNTY	ROUTE	POST MILES TOTAL PROJECT	SHEET No.	TOTAL SHEETS
03	Sac	160	L7.0	27	61

M. A. Panchesson 11-17-14
REGISTERED CIVIL ENGINEER DATE

11-17-14
PLANS APPROVAL DATE

REGISTERED PROFESSIONAL ENGINEER M.A. PANCHESSON No. 44125 Exp. 6-30-15 CIVIL STATE OF CALIFORNIA

THE STATE OF CALIFORNIA OR ITS OFFICERS OR AGENTS SHALL NOT BE RESPONSIBLE FOR THE ACCURACY OR COMPLETENESS OF SCANNED COPIES OF THIS PLAN SHEET.

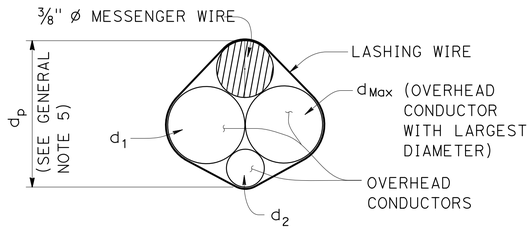

$d_p = 3/8'' + d_{Max} + 0.30 * (d_1 + d_2 + \ldots d_n)$

PROJECTED DEPTH OF OVERHEAD BUNDLE, (d_p)

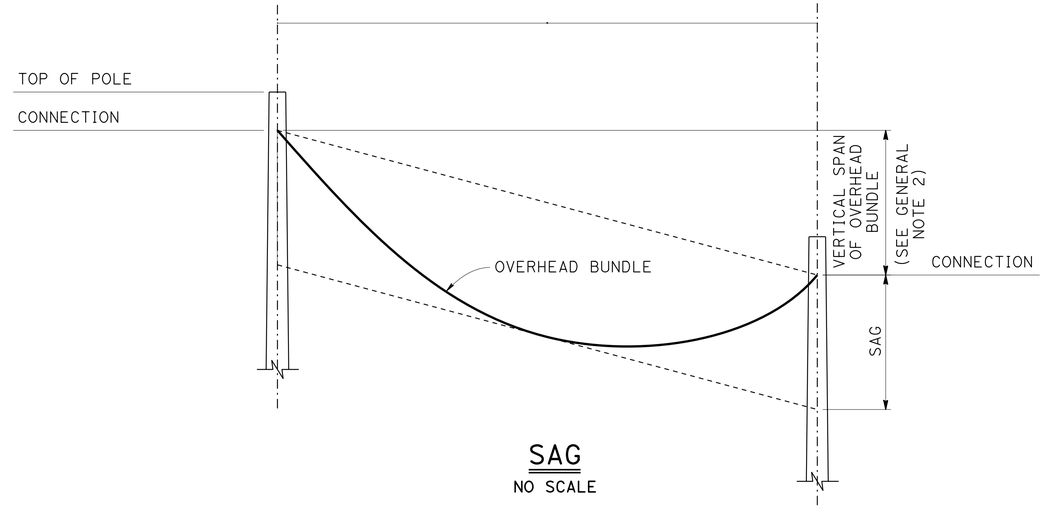

SAG
NO SCALE

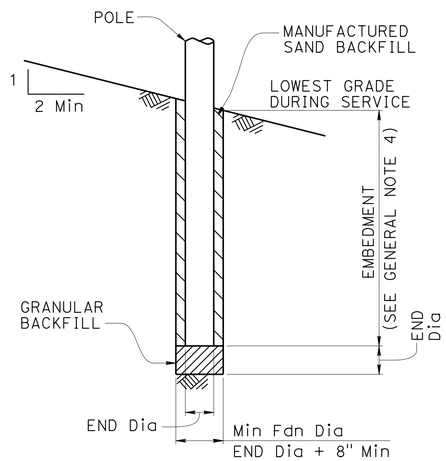

POLE FOUNDATION

Design: AASHTO Standard Specifications for Structural Supports for Highway Signs, Luminaires and Traffic Signals, Fifth Edition (LTS-5).

GROUP LOAD COMBINATIONS:

I Dead Load
II Dead Load + Wind Load
III Dead Load + 0.5 (Wind Load) + Ice Load
IV Fatigue: Not used

LOADING:

Wind Loading: 100 mph (3-second gust)
Wind Recurrence Interval: 10 years
Combined height, exposure, and elevated terrain factor = 1.05 (Exposure C, structure is not located on or over the top half of a ridge, hill, or escarpment)

Ice Loading: 3.0 psf on surfaces, 0.60 in radial thickness of ice at a unit weight of 60 pcf on overhead bundles

BASIC DESIGN VALUES:

Timber Poles: Fb = 1850 psi
Fv = 110 psi
Fcp = 230 psi
Fc = 950 psi
E = 1500 x 10^3 psi

DESIGN WIRE BREAKING STRENGTHS:

ASTM A475, Utilities Grade, 7 strand modified by termination efficiency factor of 0.8

FOUNDATION DESIGN NOTES:

1. Pole embedment depth design is based on Broms' approximate procedure as described in Article 13.6 of AASHTO LTS-5.
2. Embedment depth is calculated based on following soil parameters,
   Cohesive Soil:
   Shear strength of soil c = 1500 psf.
   Cohesionless Soil:
   Ø = 30 deg, γ = 120 pcf.
   Soil assumed to be unsaturated.
3. An overload factor of 2.0 and an undercapacity factor of 0.7 were used for safety factor of 2.86.
4. Allowable vertical bearing pressure at the end bearing of poles is 3000 psf at 6 feet or more embedment.

GENERAL NOTES:

1. The messenger wire and any combination of overhead conductors must not exceed either a self weight of 3.0 lb/ft or the maximun d_p.
2. The maximum vertical span is 10% of the horizontal span.
3. For poles with adjacent unbalanced horizontal spans, the shortest horizontal span must be at least 50% of the largest horizontal span.
4. Add 2'-0" for slopes above 1V:4H.
5. For a pole supporting multiple spans, calculate d_p for each span and use the largest value.
6. Do not exceed the attachments shown.

DIAMETERS AND SELF WEIGHT OF OVERHEAD CONDUCTORS

CONDUCTOR OR CABLE TYPE	DIAMETER d (in)	WEIGHT w (plf)
3 CONDUCTOR SIGNAL CABLE (3CSC)	0.400	0.0980
5 CONDUCTOR SIGNAL CABLE (5CSC)	0.500	0.1560
9 CONDUCTOR SIGNAL CABLE (9CSC)	0.650	0.2760
12 CONDUCTOR SIGNAL CABLE (12CSC)	0.800	0.3970
28 CONDUCTOR SIGNAL CABLE (28CSC)	0.900	0.6490
1-#14	0.166	0.0235
1-#12	0.185	0.0330
1-#10	0.210	0.0476
1-#8	0.271	0.0774
1-#6	0.310	0.1130
1-#4	0.359	0.1690
1-#3	0.388	0.2080
1-#2	0.420	0.2560
1-#1	0.498	0.3340
6-CONDUCTOR SIGNAL INTERCONNECT CABLE (SIC)	0.350	0.0860
12-CONDUCTOR SIGNAL INTERCONNECT CABLE (SIC)	0.500	0.1440
DETECTOR LEAD-IN CABLE (DLC)	0.310	0.0440
12 to 48-STRAND FIBER OPTIC CABLE (48FOC)	0.424	0.0600
72-STRAND FIBER OPTIC CABLE (72FOC)	0.484	0.0770
96-STRAND FIBER OPTIC CABLE (96FOC)	0.535	0.1050
144-STRAND FIBER OPTIC CABLE (144FOC)	0.670	0.1890
3/8" Ø MESSENGER WIRE	0.375	0.2730

TEMPORARY WOOD POLES
GENERAL NOTES

SPECIAL ELECTRICAL STRUCTURES
NO SCALE

SES-1

STANDARD DRAWING
FILE NO. xs18-010
APPROVAL DATE November 2012

STATE OF CALIFORNIA - DEPARTMENT OF TRANSPORTATION
Caltrans® DIVISION OF ENGINEERING
FUNCTIONAL SUPERVISOR ALI KIANI
CALCULATED-DESIGNED BY / CHECKED BY
DIVISION OF ENGINEERING SERVICES
REVISED BY / DATE REVISED

LAST REVISION 00-00-00 | DATE PLOTTED => 22-DEC-2014 | TIME PLOTTED => 13:42

Dist	COUNTY	ROUTE	POST MILES TOTAL PROJECT	SHEET No.	TOTAL SHEETS
03	Sac	160	L7.0	28	61

M. A. Panchesson 11-17-14
REGISTERED CIVIL ENGINEER DATE

11-17-14
PLANS APPROVAL DATE

REGISTERED PROFESSIONAL ENGINEER M.A. PANCHESSON No. 44125 Exp. 6-30-15 CIVIL STATE OF CALIFORNIA

THE STATE OF CALIFORNIA OR ITS OFFICERS OR AGENTS SHALL NOT BE RESPONSIBLE FOR THE ACCURACY OR COMPLETENESS OF SCANNED COPIES OF THIS PLAN SHEET.

LEGEND

Wood Pole No Attachments

A Wood Pole with Attachments

— OH — Overhead Bundle

POLE SELECTION TABLE

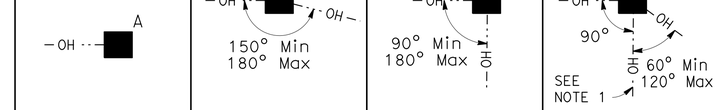

			CASE 1N				CASE 2N				CASE 3N				CASE 4N				CASE 5N
		MAXIMUM d_p	1"	1.5"	2.0"	2.5"	1"	1.5"	2.0"	2.5"	1.0"	1.5"	2.0"	2.5"	1"	1.5"	2.0"	2.5"	N/A
OVERHEAD BUNDLE HORIZONTAL SPAN (Max)	50'	MINIMUM POLE CLASS	H-1	H-2	H-2	H-2	4	3	2	1	H-2	H-2	H-3	H-3	H-4	H-4	H-4	H-5	CLASS 1 E = 10'
		POLE EMBEDMENT (E)	11'				10'				11'				12'				
	100'	MINIMUM POLE CLASS	H-2	H-3	H-4	H-5	1	H-1	H-2	H-3	H-4	H-5	H-5	H-6	H-5	H-5	H-6		
		POLE EMBEDMENT (E)	12'				11'				12'				12'				
	150'	MINIMUM POLE CLASS	H-4	H-5	H-6		H-1	H-2	H-3	H-5	H-6				H-6				
		POLE EMBEDMENT (E)	12'				12'				12'				12'				
	200'	MINIMUM POLE CLASS	H-5	H-6			H-2	H-3	H-5										
		POLE EMBEDMENT (E)	12'				12'												

1. CCTV camera assembly or vehicle detection system
2. Overhead bundle consisting of a 3/8" ø messenger wire and overhead conductors and lashing wire.
3. Luminaire with mast arm
4. Pedestrian pushbutton
5. Signal face with 3 indications or single sheet sign panel (10 SQFT Max)
6. Riser with weather head as required
7. Pull box as required
8. Grounding as required
9. Single section flashing beacon or single sheet sign panel (4 SQFT Max)
10. Single sheet sign panel (4' x 4' Max) or signal face with 3 indications
11. Flashing beacon control assembly
12. NEMA 3R enclosure, 26"(W) x 56"(H) x 12"(D) Max dimensions. Max weight including batteries, 450 lbs
13. 25' SQFT Max total photovoltaic panels mounted as shown as required
14. 2-section 12" flashing beacon

NOTES:

1. In addition to other restrictions on maximum horizontal span, this horizontal span must not exceed 100'.
2. Cases 1N, 3N and 4N may substitute the attachments shown in Case 5N if the photovoltaic panel is not included.

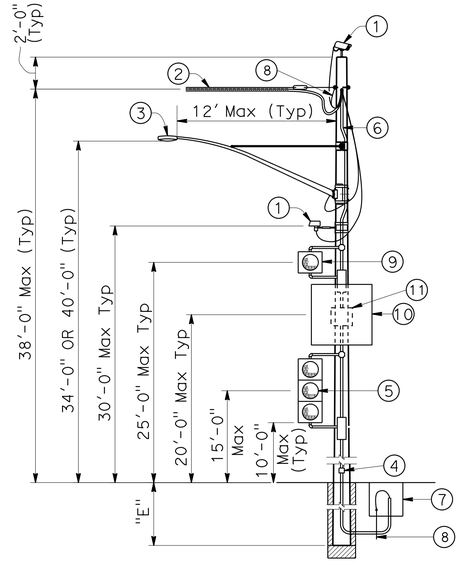

CASE 1N
POLE AT DEAD END WITH ATTACHMENTS
SEE NOTE 2

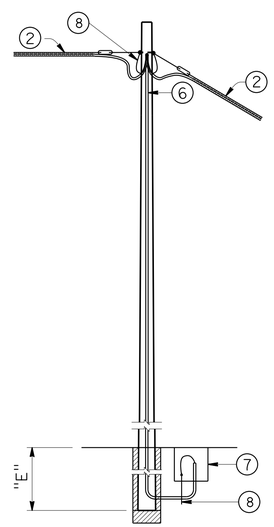

CASE 2N
POLE AT TANGENT WITHOUT ATTACHMENTS

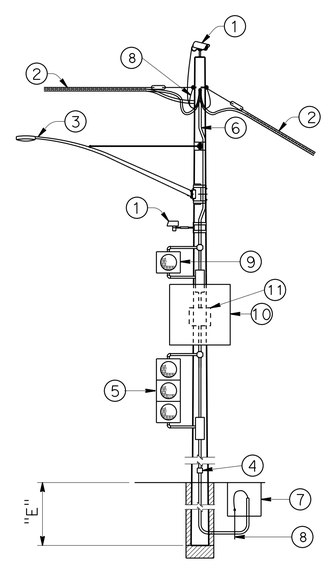

CASE 3N
POLE AT TANGENT OR CORNER WITH ATTACHMENTS
SEE NOTE 2

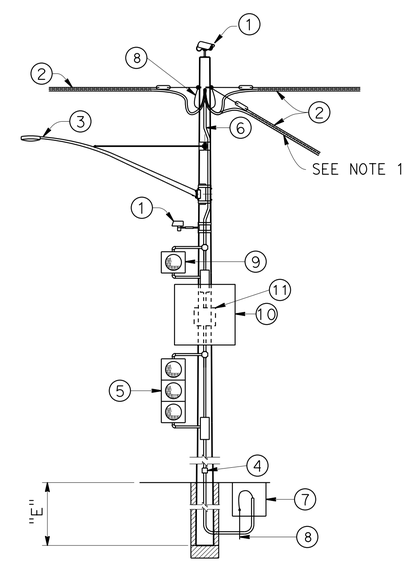

CASE 4N
POLE AT JUNCTION WITH ATTACHMENTS
SEE NOTE 2

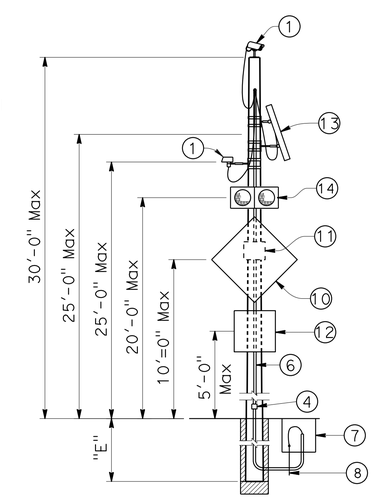

CASE 5N
POLE WITHOUT OVERHEAD BUNDLE WITH ATTACHMENTS

TEMPORARY WOOD POLES
NON-GUYED - NO SIGNALS ON SPANS

SPECIAL ELECTRICAL STRUCTURES

NO SCALE

SES-2

STATE OF CALIFORNIA - DEPARTMENT OF TRANSPORTATION
Caltrans® DIVISION OF ENGINEERING

FUNCTIONAL SUPERVISOR: ALI KIANI

DIVISION OF ENGINEERING SERVICES

CALCULATED-DESIGNED BY | CHECKED BY | REVISED BY | DATE REVISED

STANDARD DRAWING
FILE NO. xs18-020
APPROVAL DATE November 2012

LAST REVISION 00-00-00 | DATE PLOTTED => 22-DEC-2014 | TIME PLOTTED => 13:42

Dist	COUNTY	ROUTE	POST MILES TOTAL PROJECT	SHEET No.	TOTAL SHEETS
03	Sac	160	L7.0	29	61

M. A. Panchesson 11-17-14
REGISTERED CIVIL ENGINEER DATE

11-17-14
PLANS APPROVAL DATE

REGISTERED PROFESSIONAL ENGINEER M.A. PANCHESSON No. 44125 Exp. 6-30-15 CIVIL STATE OF CALIFORNIA

THE STATE OF CALIFORNIA OR ITS OFFICERS OR AGENTS SHALL NOT BE RESPONSIBLE FOR THE ACCURACY OR COMPLETENESS OF SCANNED COPIES OF THIS PLAN SHEET.

LEGEND

A — Wood Pole with Attachments

—OH··— Overhead Bundle

——→ Guy Anchor

POLE SELECTION TABLE

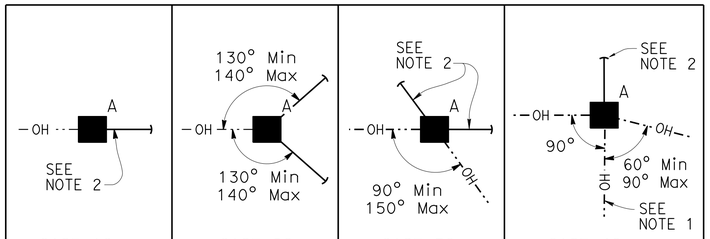

OVERHEAD BUNDLE HORIZONTAL SPAN (Max)	MAXIMUM d_p	1"	1.5"	2.0"	2.5"	1"	1.5"	2.0"	2.5"	1"	1.5"	2.0"	2.5"	1"	1.5"	2.0"	2.5"
50′	MINIMUM POLE CLASS	H-1	H-1	H-2	H-2	1	1	1	1	1	1	1	H-1	H-2	H-2	H-3	H-3
	POLE EMBEDMENT (E)	10′				9′				9′				11′			
100′	MINIMUM POLE CLASS	H-2	H-2	H-3	H-4	1	H-1	H-1	H-1	1	H-1	H-2	H-2	H-3	H-3	H-4	H-4
	POLE EMBEDMENT (E)	11′				9′				9′				12′			
150′	MINIMUM POLE CLASS	H-3	H-3	H-4	H-5	H-1	H-1	H-2	H-2	H-2	H-3	H-3	H-3	H-4	H-5	H-5	H-6
	POLE EMBEDMENT (E)	11′				9′				9′				12′			
200′	MINIMUM POLE CLASS	H-4	H-4	H-5	H-6	H-1	H-2	H-3	H-3	H-3	H-3	H-4	H-4	H-5	H-6		
	POLE EMBEDMENT (E)	11′				9′				9′				12′			

1. CCTV camera assembly or vehicle detection system
2. Overhead bundle consisting of a ⅜" Ø messenger wire and overhead conductors and lashing wire.
3. Luminaire with mast arm
4. Pedestrian pushbutton
5. Signal face with 3 indications or single sheet sign panel (10 SQFT Max)
6. Riser with weather head as required
7. Pull box as required
8. Grounding as required
9. Single section flashing beacon or single sheet sign panel (4 SQFT Max)
10. Single sheet sign panel (4′ x 4′ Max) or signal face with 3 indications
11. Flashing beacon control assembly
12. ½" Ø guy wire with white guy marker and strain insulator (for anchorage see "TEMPORARY WOOD POLES-DETAILS No. 2" sheet)

NOTES:

1. In addition to other restrictions on maximum horizontal span, this horizontal span must not exceed 100′.
2. Guy wire in line with opposing span ± 5°.

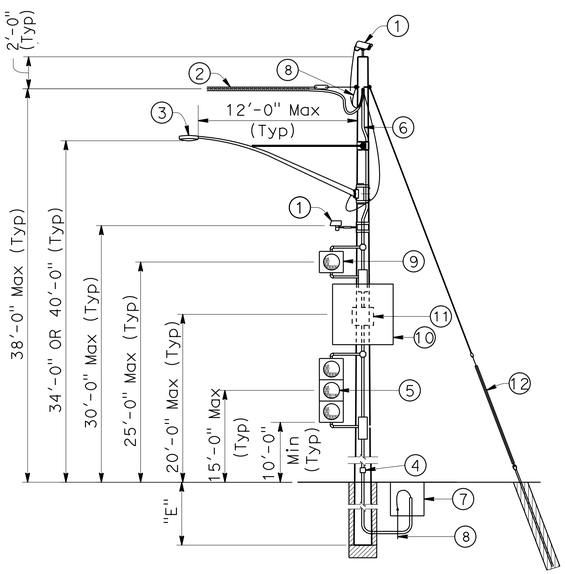

CASE 1G
POLE AT DEAD END
WITH ATTACHMENTS

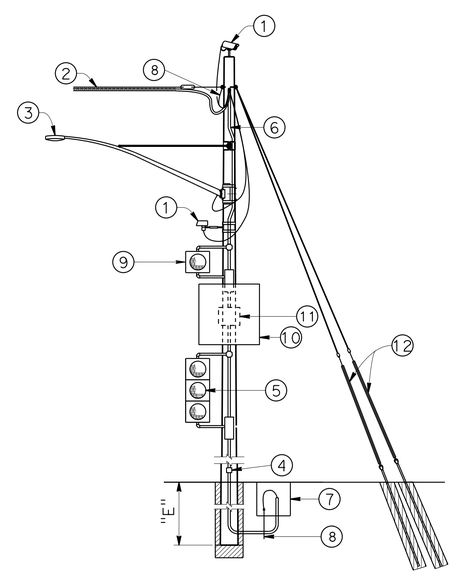

CASE 2G
POLE AT DEAD END
WITH ATTACHMENTS

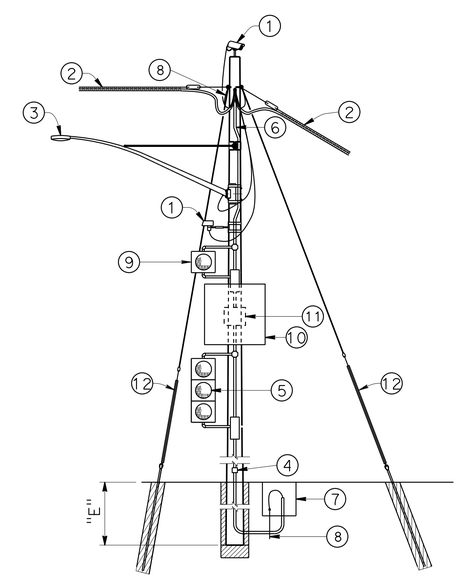

CASE 3G
POLE AT CORNER
WITH ATTACHMENTS

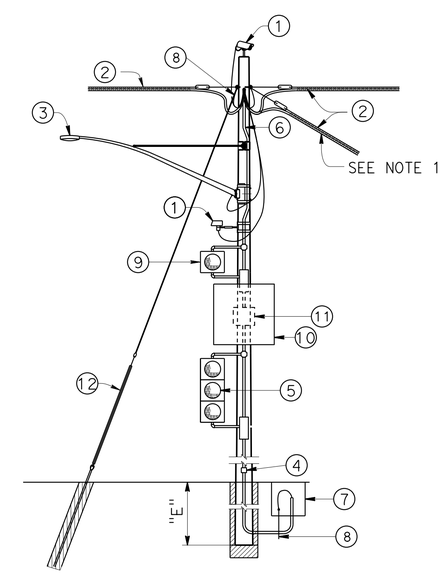

CASE 4G
POLE AT JUNCTION
WITH ATTACHMENTS

TEMPORARY WOOD POLES
GUYED - NO SIGNALS ON SPANS

SPECIAL ELECTRICAL STRUCTURES

NO SCALE

SES-3

STANDARD DRAWING
FILE NO. xs18-030
APPROVAL DATE November 2012

STATE OF CALIFORNIA - DEPARTMENT OF TRANSPORTATION
Caltrans® DIVISION OF ENGINEERING
FUNCTIONAL SUPERVISOR ALI KIANI
CALCULATED-DESIGNED BY
CHECKED BY
DIVISION OF ENGINEERING SERVICES
DIVISION OF ENGINEERING SERVICES
REVISED BY
DATE REVISED

LAST REVISION 00-00-00
DATE PLOTTED => 22-DEC-2014
TIME PLOTTED => 13:42

Dist	COUNTY	ROUTE	POST MILES TOTAL PROJECT	SHEET No.	TOTAL SHEETS
03	Sac	160	L7.0	30	61

M. A. Panchesson 11-17-14
REGISTERED CIVIL ENGINEER DATE

11-17-14
PLANS APPROVAL DATE

REGISTERED PROFESSIONAL ENGINEER M.A. PANCHESSON No. 44125 Exp. 6-30-15 CIVIL STATE OF CALIFORNIA

THE STATE OF CALIFORNIA OR ITS OFFICERS OR AGENTS SHALL NOT BE RESPONSIBLE FOR THE ACCURACY OR COMPLETENESS OF SCANNED COPIES OF THIS PLAN SHEET.

LEGEND

- A — Wood Pole with Attachments
- —TS— Overhead Bundle with Signal Faces (See Note 2)
- —OH— Overhead Bundle
- Guy Anchor

POLE SELECTION TABLE

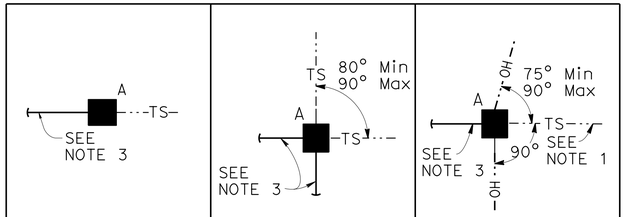

			CASE 1GT			CASE 2GT			CASE 3GT		
		MAXIMUM dp	1"	1.5"	2.0"	1"	1.5"	2.0"	1"	1.5"	2.0"
OVERHEAD BUNDLE HORIZONTAL SPAN Max	50'	MINIMUM POLE CLASS	H-2	H-3	H-3	H-2	H-2	H-2	H-3	H-4	H-4
		POLE EMBEDMENT (E)	10'			10'			11'		
	100'	MINIMUM POLE CLASS	H-3	H-3	H-4	H-2	H-3	H-3	H-4	H-4	H-5
		POLE EMBEDMENT (E)	11'			10'			11'		
	150'	MINIMUM POLE CLASS	H-3	H-4	H-4	H-2	H-3	H-4	H-4	H-5	H-5
		POLE EMBEDMENT (E)	11'			10'			11'		

NOTES:

1. In addition to other restrictions on maximum horizontal span, this horizontal span must not exceed 100'.
2. Maximum of 2 SIGNAL FACES per span within the hatched regions indicated by "LOCATION OF SIGNAL FACES".
3. Guy wire in line with opposing span ± 5°.

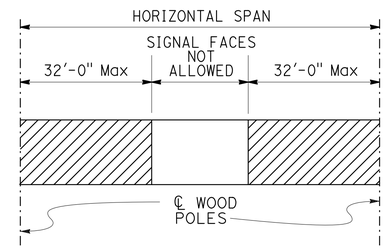

LOCATION OF SIGNAL FACES

1. CCTV camera assembly or vehicle detection system
2. Overhead bundle consisting of 3/8" ø messenger wire and overhead conductors and lashing wire
3. Luminaire with mast arm
4. Pedestrian pushbutton
5. Signal face with 3 indications or single sheet sign panel (10 SQFT Max)
6. Riser with weather head as required
7. Pull box as required
8. Grounding as required
9. 3/8" ø tether wire
10. 1/2" ø guy wire with white guy marker and strain insulator. For anchorage see "TEMPORARY WOOD POLES-DETAILS No. 2" sheet
11. Pedestrian signal head

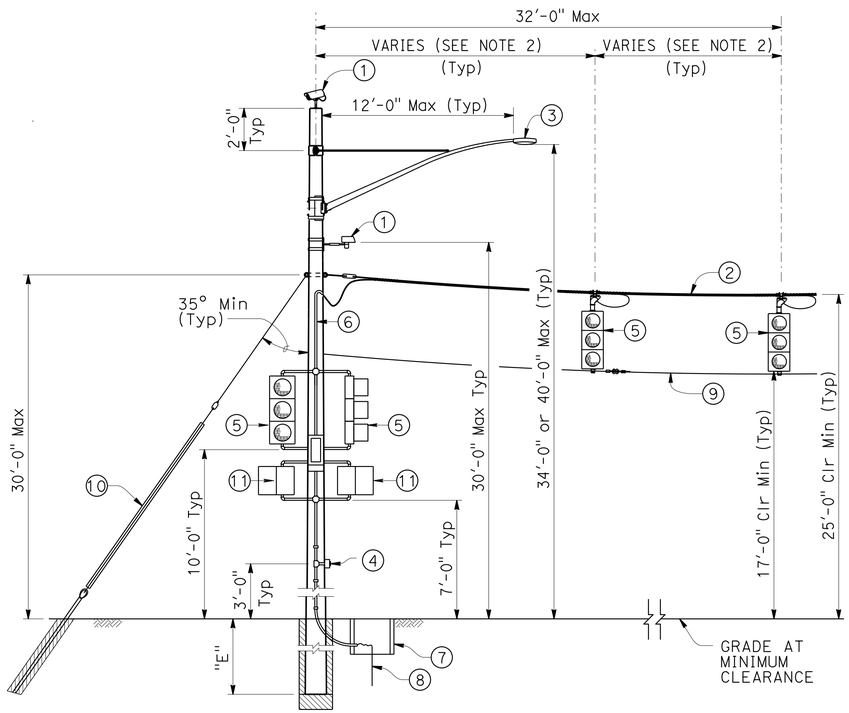

CASE 1GT
POLE AT DEAD END
WITH ATTACHMENTS

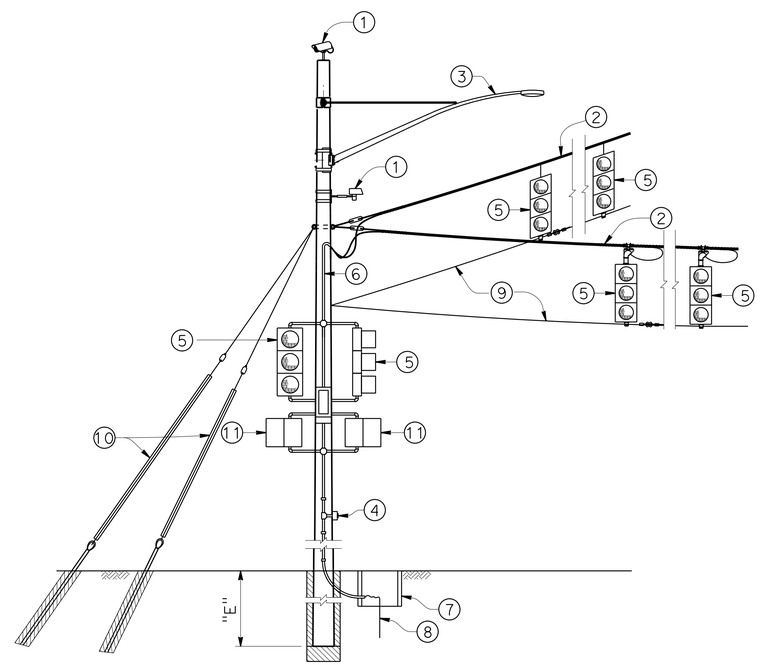

CASE 2GT
POLE AT CORNER
WITH ATTACHMENTS

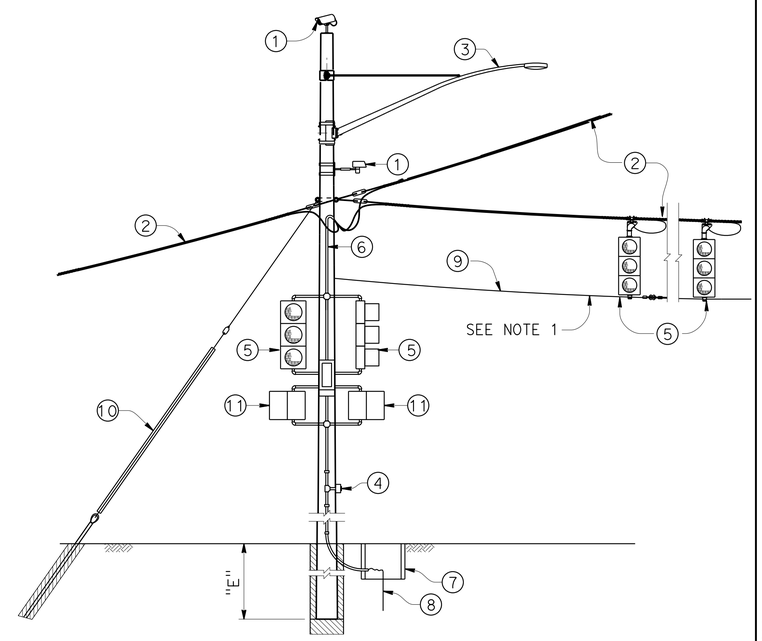

CASE 3GT
POLE AT JUNCTION
WITH ATTACHMENTS

TEMPORARY WOOD POLES
GUYED-WITH SIGNAL FACES ON SPANS

SPECIAL ELECTRICAL STRUCTURES

NO SCALE

SES-4

STANDARD DRAWING
FILE NO. xs18-040
APPROVAL DATE November 2012

STATE OF CALIFORNIA - DEPARTMENT OF TRANSPORTATION
Caltrans® DIVISION OF ENGINEERING

FUNCTIONAL SUPERVISOR: ALI KIANI
CALCULATED-DESIGNED BY / CHECKED BY
DIVISION OF ENGINEERING SERVICES
REVISED BY / DATE REVISED

LAST REVISION 00-00-00
DATE PLOTTED => 22-DEC-2014
TIME PLOTTED => 13:42

Dist	COUNTY	ROUTE	POST MILES TOTAL PROJECT	SHEET No.	TOTAL SHEETS
03	Sac	160	L7.0	31	61

M. A. Panchesson 11-17-14
REGISTERED CIVIL ENGINEER DATE

11-17-14
PLANS APPROVAL DATE

REGISTERED PROFESSIONAL ENGINEER M.A. PANCHESSON No. 44125 Exp. 6-30-15 CIVIL STATE OF CALIFORNIA

THE STATE OF CALIFORNIA OR ITS OFFICERS OR AGENTS SHALL NOT BE RESPONSIBLE FOR THE ACCURACY OR COMPLETENESS OF SCANNED COPIES OF THIS PLAN SHEET.

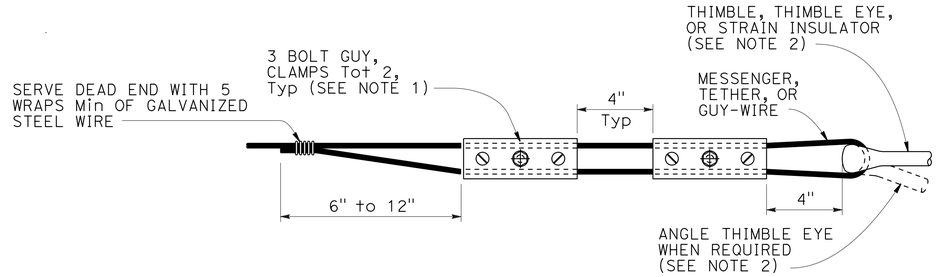

ALTERNATIVE TERMINATION OF MESSENGER WIRES USING GUY CLAMPS

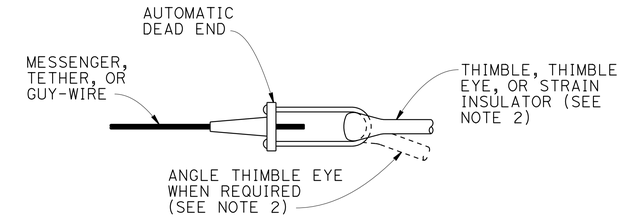

TERMINATION OF WIRES USING AUTOMATIC DEAD END

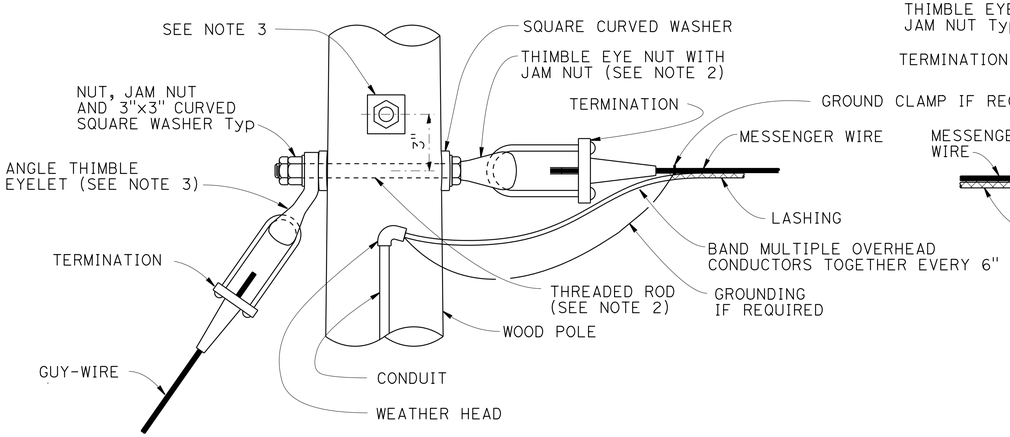

POLE AT DEAD END WITH GUY-WIRE CONNECTION

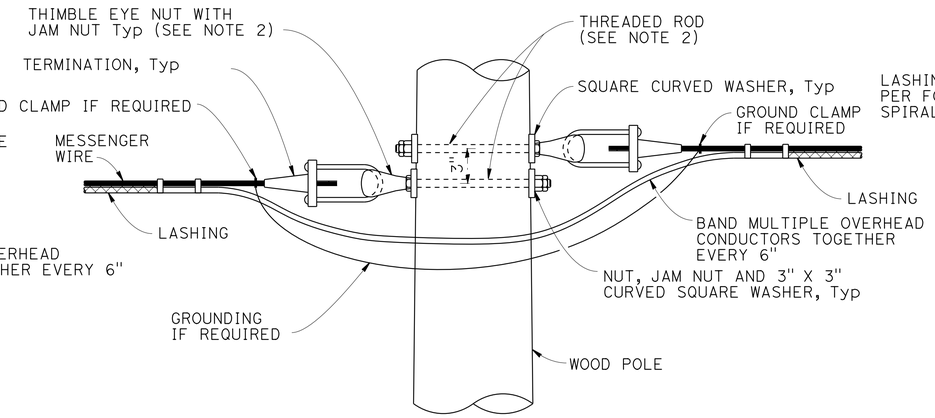

POLE AT TANGENT OR CORNER CONNECTION

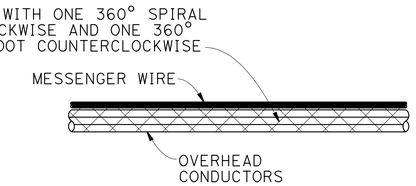

DOUBLE LASHING DETAIL

USE IF d_p IS GREATER THAN 1½"

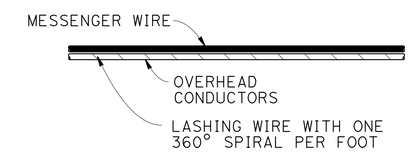

TYPICAL LASHING DETAIL

USE IF d_p IS 1½" OR LESS

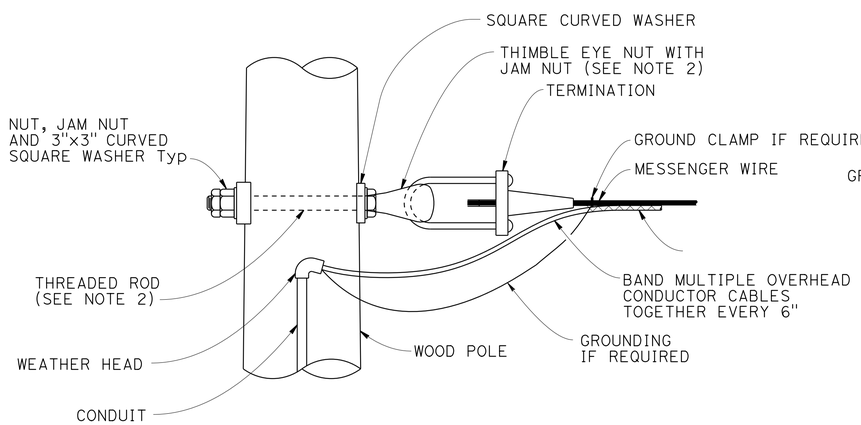

POLE AT DEAD END CONNECTION

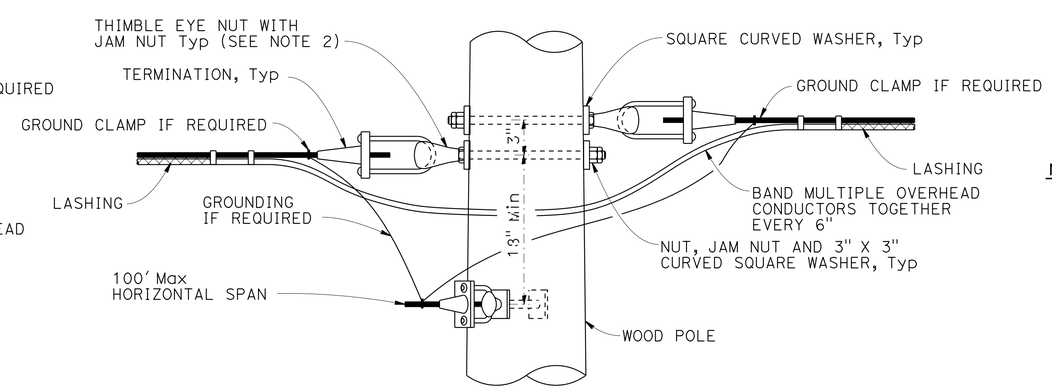

POLE AT JUNCTION CONNECTION

NOTES:

1. For guy wires use 3 clamps.
2. Use ⅝" ø except ¾" ø at guyed wires
3. Install additional angle thimble eyelet at poles with two guy wires.

TEMPORARY WOOD POLES
DETAILS No. 1

SPECIAL ELECTRICAL STRUCTURES

NO SCALE

SES-5

STANDARD DRAWING
FILE NO. xs18-080-1
APPROVAL DATE November 2012

STATE OF CALIFORNIA - DEPARTMENT OF TRANSPORTATION
Caltrans® DIVISION OF ENGINEERING
FUNCTIONAL SUPERVISOR ALI KIANI
DIVISION OF ENGINEERING SERVICES
CALCULATED-DESIGNED BY
CHECKED BY
REVISED BY
DATE REVISED

LAST REVISION 00-00-00
DATE PLOTTED => 22-DEC-2014
TIME PLOTTED => 13:42

Dist	COUNTY	ROUTE	POST MILES TOTAL PROJECT	SHEET No.	TOTAL SHEETS
03	Sac	160	L7.0	32	61

M. A. Panchesson 11-17-14
REGISTERED CIVIL ENGINEER DATE

11-17-14
PLANS APPROVAL DATE

REGISTERED PROFESSIONAL ENGINEER
M.A. PANCHESSON
No. 44125
Exp. 6-30-15
CIVIL
STATE OF CALIFORNIA

THE STATE OF CALIFORNIA OR ITS OFFICERS OR AGENTS SHALL NOT BE RESPONSIBLE FOR THE ACCURACY OR COMPLETENESS OF SCANNED COPIES OF THIS PLAN SHEET.

NOTES:

1. Minimum allowable tension capacity "Qa" = 8,900 lbs.
2. Minimum installation torque "T" = 1780 lbs-ft.
3. Helical anchor detail may be used in place of expanded steel anchors.

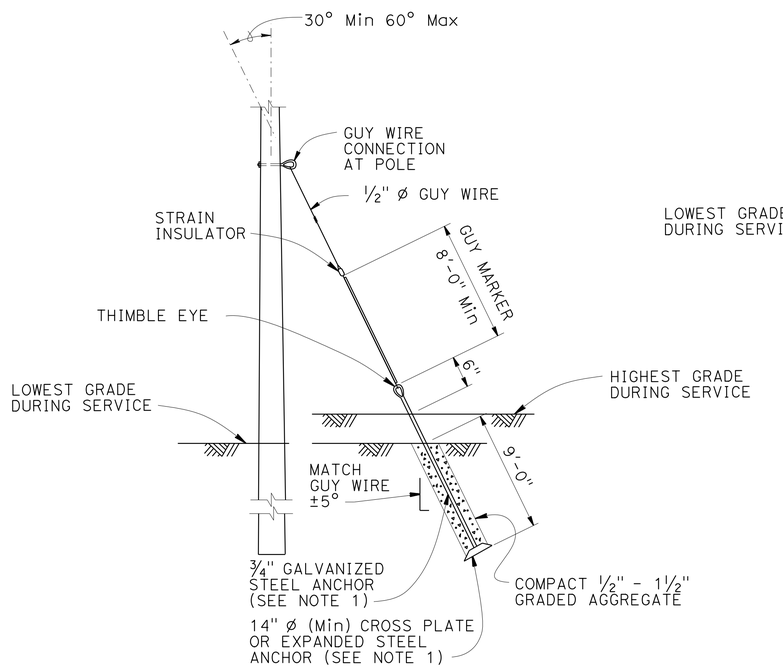

EXPANDED STEEL ANCHOR DETAIL

SEE NOTE 3

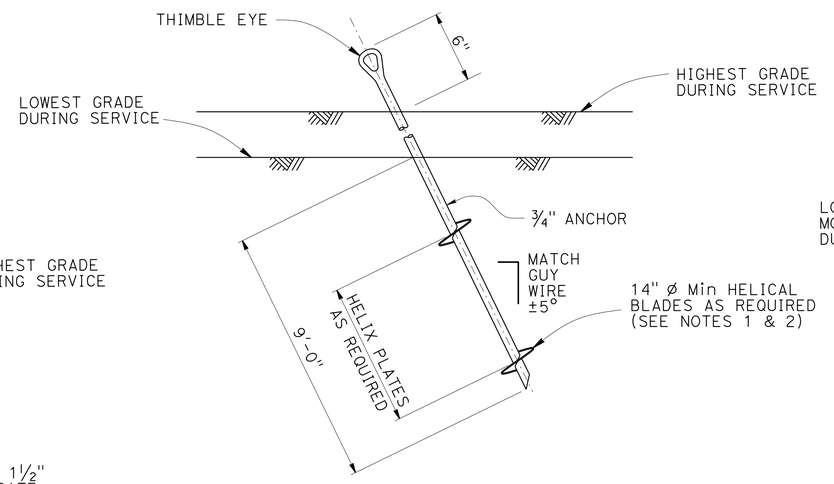

HELICAL ANCHOR DETAIL

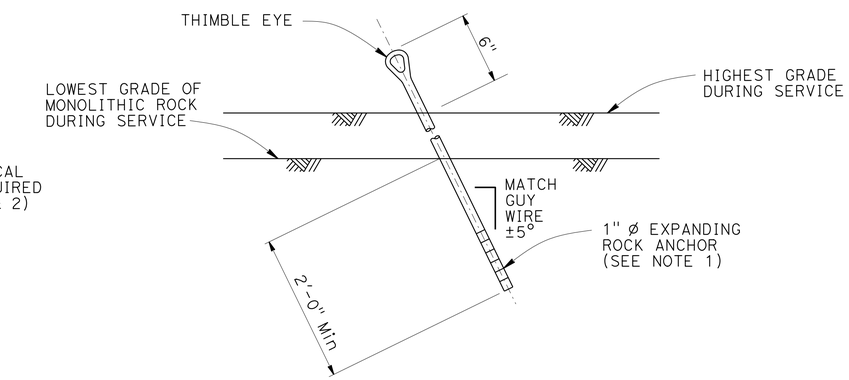

EXPANDING ROCK ANCHOR DETAIL

TEMPORARY WOOD POLES
DETAILS No. 2

SPECIAL ELECTRICAL STRUCTURES

NO SCALE

SES-6

STATE OF CALIFORNIA - DEPARTMENT OF TRANSPORTATION
Caltrans® DIVISION OF ENGINEERING

FUNCTIONAL SUPERVISOR: ALI KIANI

CALCULATED-DESIGNED BY / CHECKED BY

DIVISION OF ENGINEERING SERVICES

REVISED BY / DATE REVISED

STANDARD DRAWING

FILE NO. xs18-080-2

APPROVAL DATE November 2012

LAST REVISION 00-00-00 | DATE PLOTTED => 22-DEC-2014 | TIME PLOTTED => 13:42

Dist	COUNTY	ROUTE	POST MILES TOTAL PROJECT	SHEET No.	TOTAL SHEETS
03	Sac	160	L7.0	33	61

M. A. Panchesson 11-17-14
REGISTERED CIVIL ENGINEER DATE

11-17-14
PLANS APPROVAL DATE

REGISTERED PROFESSIONAL ENGINEER M.A. PANCHESSON No. 44125 Exp. 6-30-15 CIVIL STATE OF CALIFORNIA

THE STATE OF CALIFORNIA OR ITS OFFICERS OR AGENTS SHALL NOT BE RESPONSIBLE FOR THE ACCURACY OR COMPLETENESS OF SCANNED COPIES OF THIS PLAN SHEET.

NOTES:

1. Luminaire mast arms must be in compliance with Standard Plan ES-6D with noted modifications.
2. Verify pole dimensions at tie-rod attachment height. Fabricate 8" flat bar with "L" Dimension to maintain an open gap between flanges in finished installation.
3. Not all screw heads and bolt heads are shown for clarity.
4. Mast arm not shown for clarity.

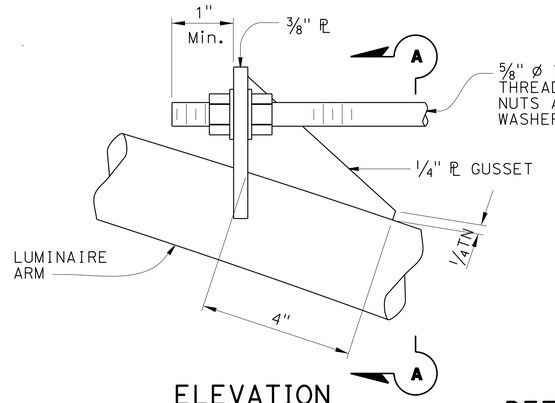

ELEVATION

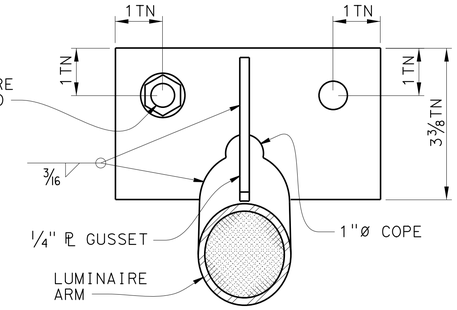

SECTION A-A

DETAIL A
TIE-ROD AT LUMINAIRE ARM
NO SCALE

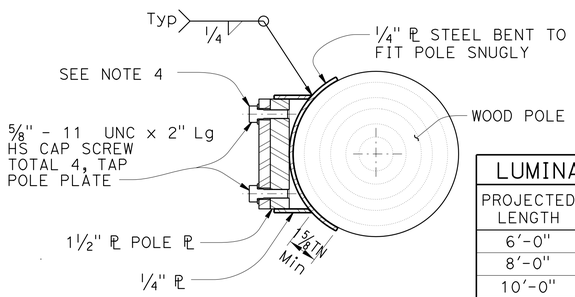

SECTION E-E

LUMINAIRE MAST ARM DATA			
PROJECTED LENGTH	N RISE	Min OD AT POLE	NOMINAL THICKNESS
6'-0"	2'-0"±	3 1/4"	0.1196"
8'-0"	2'-6"±	3 1/2"	
10'-0"	3'-3"±	3 7/8"	
12'-0"	4'-3"±		

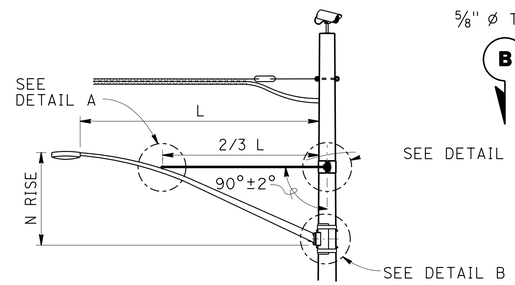

LUMINAIRE MAST ARM

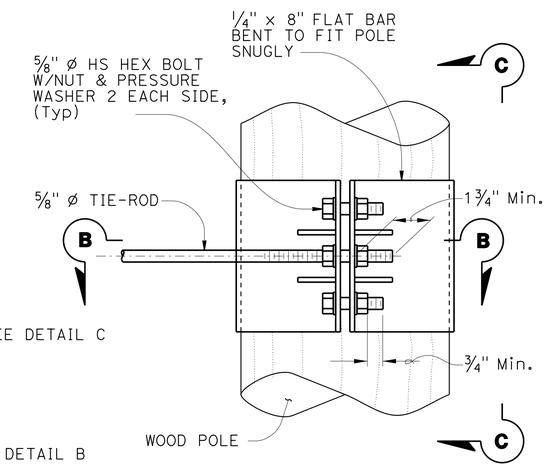

ELEVATION

NOTE:
Not all screw and bolt heads shown for clarity.

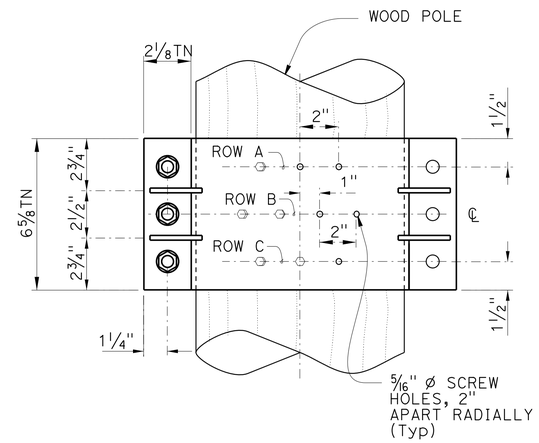

VIEW C-C

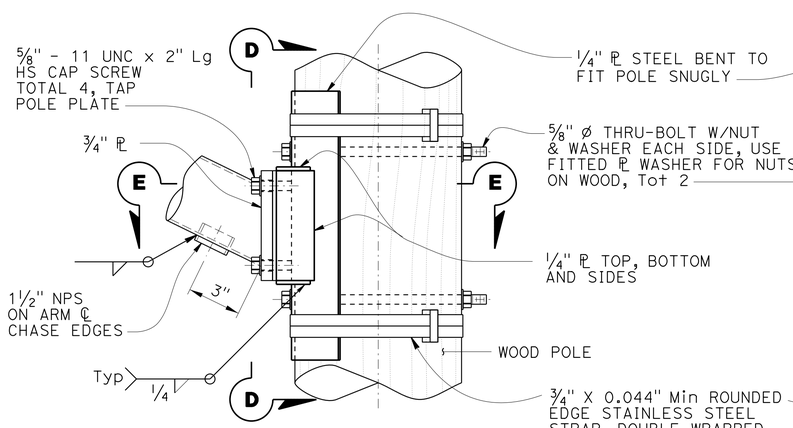

ELEVATION

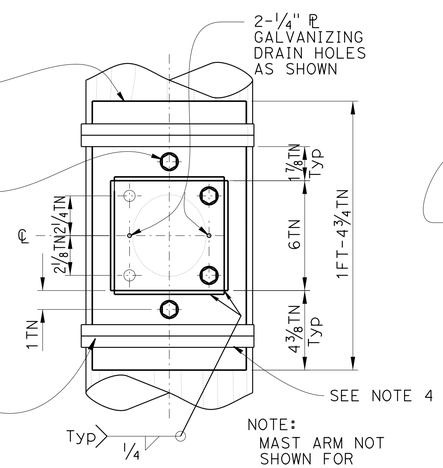

VIEW D-D

DETAIL B
ARM CONNECTION DETAILS
NO SCALE

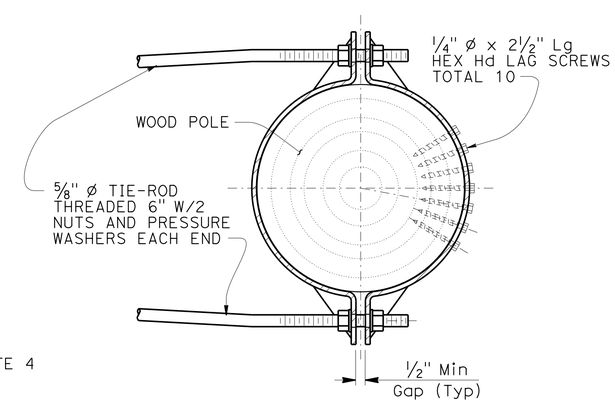

SECTION B-B

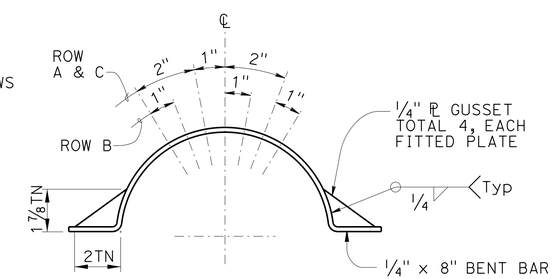

LAG SCREW AND
GUSSET PLATE LAYOUT

DETAIL C
TIE-ROD AT POLE
NO SCALE

TEMPORARY WOOD POLES
DETAILS No. 3

SPECIAL ELECTRICAL STRUCTURES

NO SCALE

SES-7

STATE OF CALIFORNIA - DEPARTMENT OF TRANSPORTATION
Caltrans® DIVISION OF ENGINEERING

FUNCTIONAL SUPERVISOR: ALI KIANI

DIVISION OF ENGINEERING SERVICES — REVISED BY — DATE REVISED
DIVISION OF ENGINEERING SERVICES — CALCULATED-DESIGNED BY — CHECKED BY

STANDARD DRAWING
FILE NO. xs18-080-3
APPROVAL DATE November 2012

LAST REVISION 00-00-00 | DATE PLOTTED => 22-DEC-2014 | TIME PLOTTED => 13:42

Dist	COUNTY	ROUTE	POST MILES TOTAL PROJECT	SHEET No.	TOTAL SHEETS
03	Sac	160	L7.0	34	61

M. A. Panchesson 11-17-14
REGISTERED CIVIL ENGINEER DATE

11-17-14
PLANS APPROVAL DATE

REGISTERED PROFESSIONAL ENGINEER M.A. PANCHESSON No. 44125 Exp. 6-30-15 CIVIL STATE OF CALIFORNIA

THE STATE OF CALIFORNIA OR ITS OFFICERS OR AGENTS SHALL NOT BE RESPONSIBLE FOR THE ACCURACY OR COMPLETENESS OF SCANNED COPIES OF THIS PLAN SHEET.

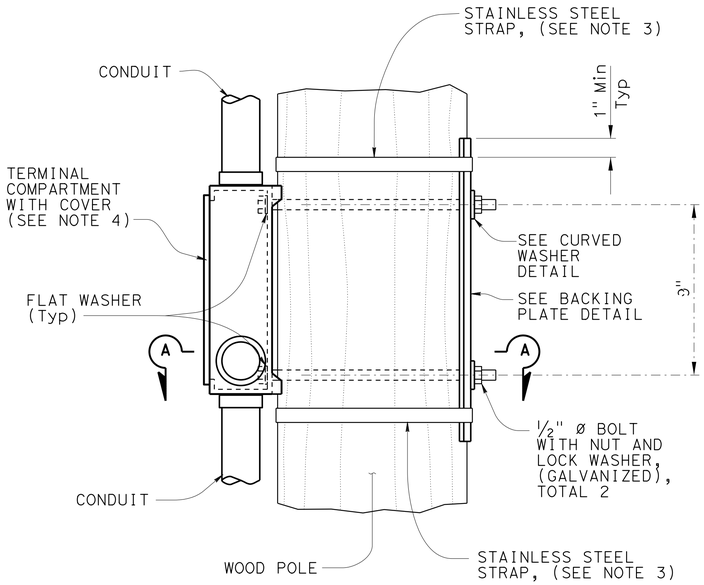

ELEVATION

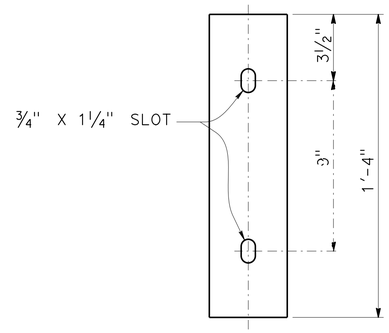

ELEVATION

PLAN

BACKING PLATE DETAIL

ELEVATION

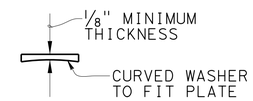

PLAN

CURVED WASHER DETAIL

NOTES:

1. Verify pole dimensions at terminal compartment for fabrication of backing plate and curved washer.
2. Backing plate to be galvanized after fabrication.
3. ¾" x 0.044" minimum, rounded edge stainless steel straps, double wrapped with 2" long bend under stainless steel strap buckle.
4. For details not shown see Standard Plan ES-4D.

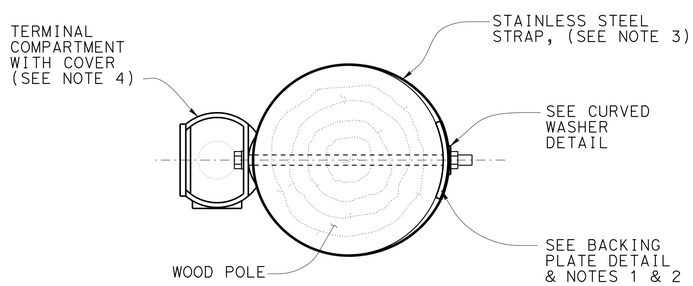

SECTION A-A

SIDE MOUNTING TERMINAL COMPARTMENT

TEMPORARY WOOD POLES
DETAILS No. 4

SPECIAL ELECTRICAL STRUCTURES

NO SCALE

SES-8

STATE OF CALIFORNIA - DEPARTMENT OF TRANSPORTATION
Caltrans® DIVISION OF ENGINEERING

FUNCTIONAL SUPERVISOR: ALI KIANI

CALCULATED-DESIGNED BY | DIVISION OF ENGINEERING SERVICES
CHECKED BY | DIVISION OF ENGINEERING SERVICES
REVISED BY | DATE REVISED

STANDARD DRAWING
FILE NO. xs18-080-4
APPROVAL DATE November 2012

LAST REVISION 00-00-00 | DATE PLOTTED => 22-DEC-2014 | TIME PLOTTED => 13:42

Dist	COUNTY	ROUTE	POST MILES TOTAL PROJECT	SHEET No.	TOTAL SHEETS
03	Sac	160	L7.0	35	61

M. A. Panchesson 11-17-14
REGISTERED CIVIL ENGINEER DATE

11-17-14
PLANS APPROVAL DATE

REGISTERED PROFESSIONAL ENGINEER M.A. PANCHESSON No. 44125 Exp. 6-30-15 CIVIL STATE OF CALIFORNIA

THE STATE OF CALIFORNIA OR ITS OFFICERS OR AGENTS SHALL NOT BE RESPONSIBLE FOR THE ACCURACY OR COMPLETENESS OF SCANNED COPIES OF THIS PLAN SHEET.

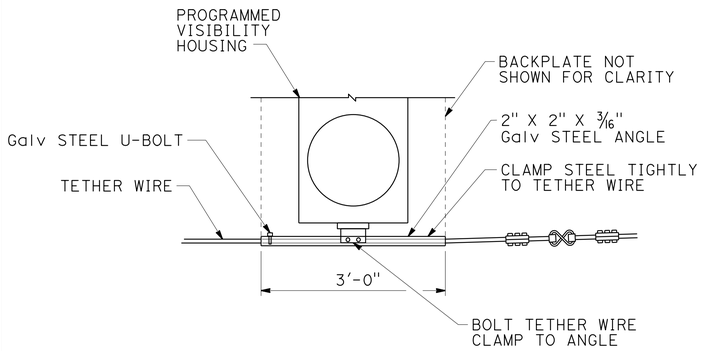

TETHER WIRE ATTACHMENT FOR PROGRAMMED VISIBILITY SIGNAL FACE

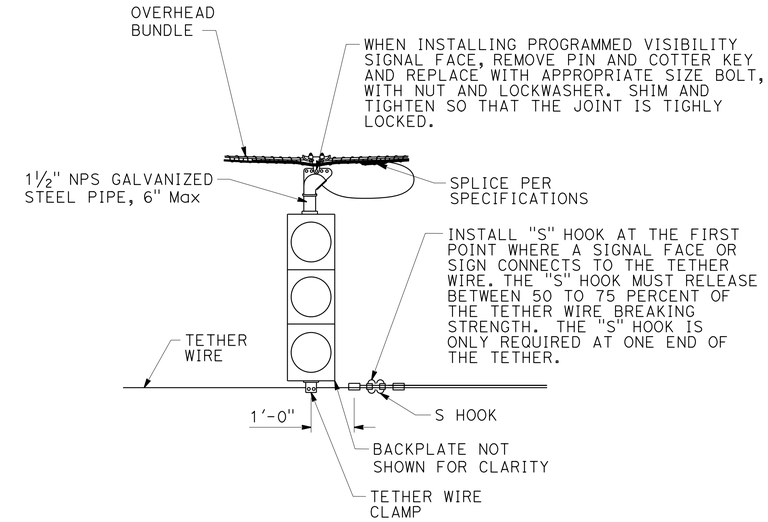

SIGNAL FACE SUPPORT

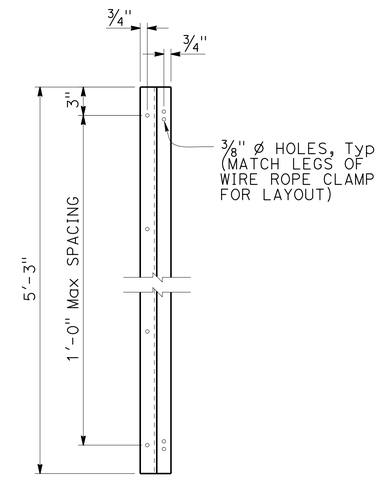

Z-BAR ELEVATION

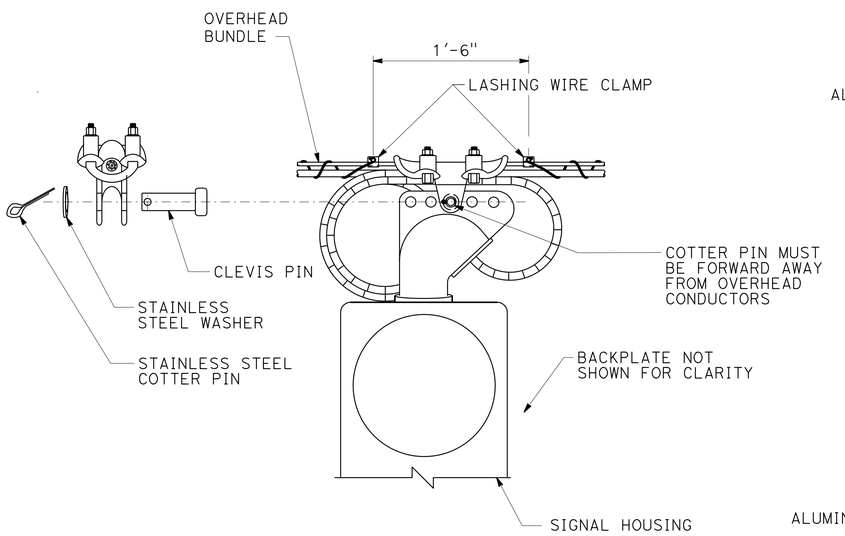

MESSENGER WIRE CLAMP COTTER PIN DETAIL

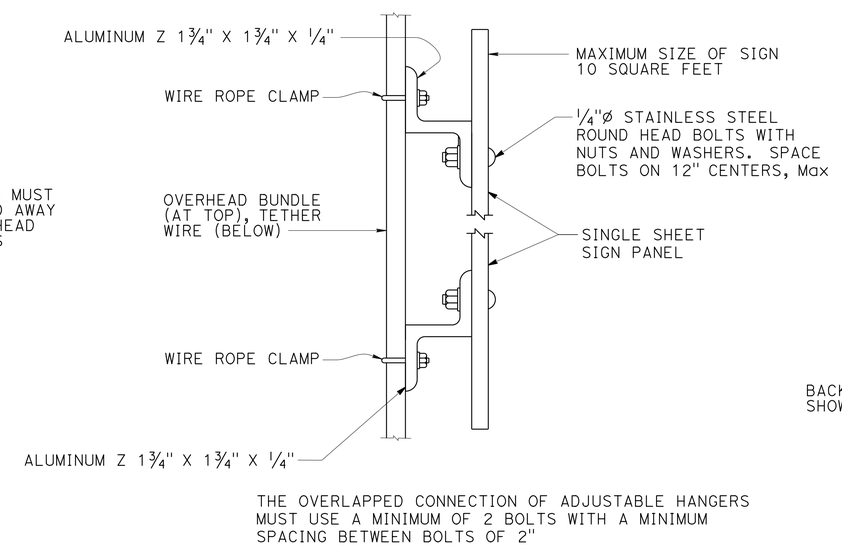

SIGN MOUNTING DETAIL

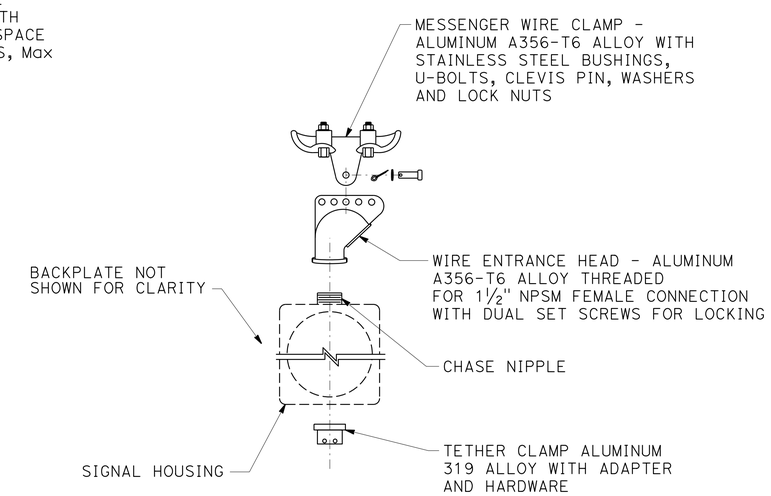

SIGNAL FACE SUPPORT EXPLODED VIEW

TEMPORARY WOOD POLES
DETAILS No. 5

SPECIAL ELECTRICAL STRUCTURES

NO SCALE

SES-9

STANDARD DRAWING
FILE NO. xs18-080-5
APPROVAL DATE November 2012

STATE OF CALIFORNIA - DEPARTMENT OF TRANSPORTATION
Caltrans® DIVISION OF ENGINEERING

REVISED BY	DATE REVISED
DIVISION OF ENGINEERING SERVICES	DIVISION OF ENGINEERING SERVICES
CALCULATED-DESIGNED BY	CHECKED BY
FUNCTIONAL SUPERVISOR	ALI KIANI

LAST REVISION 00-00-00 | DATE PLOTTED => 22-DEC-2014 | TIME PLOTTED => 13:42

M

Maint	MAINTENANCE
Max	MAXIMUM
MB	METAL BEAM
MBB	METAL BEAM BARRIER
MBGR	METAL BEAM GUARD RAILING
Med	MEDIAN
MGS	MIDWEST GUARDRAIL SYSTEM
MH	MANHOLE
Min	MINIMUM
Misc	MISCELLANEOUS
Misc I & S	MISCELLANEOUS IRON AND STEEL
Mkr	MARKER
Mod	MODIFIED,
	MODIFY
Mon	MONUMENT
MP	METAL PLATE
MPGR	METAL PLATE GUARD RAILING
MR	MOVEMENT RATING
MSE	MECHANICALLY STABILIZED EMBANKMENT
Mt	MOUNTAIN, MOUNT
Mtl	MATERIAL
MVP	MAINTENANCE VEHICLE PULLOUT

N

N	NORTH
NB	NORTHBOUND
No.	NUMBER (MUST HAVE PERIOD)
Nos.	NUMBERS (MUST HAVE PERIOD)
NPS	NOMINAL PIPE SIZE
NS	NEAR SIDE
NSP	NEW STANDARD PLAN
NTS	NOT TO SCALE

O

Oblr	OBLITERATE
OC	OVERCROSSING
OD	OUTSIDE DIAMETER
OF	OUTSIDE FACE
OG	ORIGINAL GROUND
OGAC	OPEN GRADED ASPHALT CONCRETE
OGFC	OPEN GRADED FRICTION COURSE
OH	OVERHEAD
OHWM	ORDINARY HIGH WATER MARK
O-O	OUT TO OUT
Opp	OPPOSITE
OSD	OVERSIDE DRAIN

P

p	PAGE
PAP	PERFORATED ALUMINUM PIPE
PB	PULL BOX
PC	POINT OF CURVATURE,
	PRECAST
PCC	POINT OF COMPOUND CURVE,
	PORTLAND CEMENT CONCRETE
PCMS	PORTABLE CHANGEABLE MESSAGE SIGN
PCP	PERFORATED CONCRETE PIPE,
	PRESTRESSED CONCRETE PIPE
PCVC	POINT OF COMPOUND VERTICAL CURVE
PEC	PERMIT TO ENTER AND CONSTRUCT
Ped	PEDESTRIAN
Ped OC	PEDESTRIAN OVERCROSSING
Ped UC	PEDESTRIAN UNDERCROSSING
Perm Mtl	PERMEABLE MATERIAL

P continued

PG	PROFILE GRADE
PI	POINT OF INTERSECTION
PJP	PARTIAL JOINT PENETRATION
Pkwy	PARKWAY
ℙ,PL	PLATE
P/L	PROPERTY LINE
PM	POST MILE,
	TIME FROM NOON TO MIDNIGHT
PN	PAVING NOTCH
POC	POINT OF HORIZONTAL CURVE
POT	POINT OF TANGENT
POVC	POINT OF VERTICAL CURVE
PP	PIPE PILE,
	PLASTIC PIPE,
	POWER POLE
PPL	PREFORMED PERMEABLE LINER
PPP	PERFORATED PLASTIC PIPE
PRC	POINT OF REVERSE CURVE
PRF	PAVEMENT REINFORCING FABRIC
PRVC	POINT OF REVERSE VERTICAL CURVE
PS&E	PLANS, SPECIFICATIONS AND ESTIMATES
PS, P/S	PRESTRESSED
PSP	PERFORATED STEEL PIPE
PT	POINT OF TANGENCY
PVC	POLYVINYL CHLORIDE
Pvmt	PAVEMENT

Q

Qty	QUANTITY

R

R	RADIUS
R & D	REMOVE AND DISPOSE
R & S	REMOVE AND SALVAGE
R/C	RATE OF CHANGE
RCA	REINFORCED CONCRETE ARCH
RCB	REINFORCED CONCRETE BOX
RCP	REINFORCED CONCRETE PIPE
RCPA	REINFORCED CONCRETE PIPE ARCH
Rd	ROAD
Reinf	REINFORCED,
	REINFORCEMENT,
	REINFORCING
Rel	RELOCATE
Repl	REPLACEMENT
Ret	RETAINING
Rev	REVISED, REVISION
Rdwy	ROADWAY
RHMA	RUBBERIZED HOT MIX ASPHALT
Riv	RIVER
RM	ROAD-MIXED
RP	RADIUS POINT,
	REFERENCE POINT
RR	RAILROAD
RSP	ROCK SLOPE PROTECTION,
	REVISED STANDARD PLAN
Rt	RIGHT
Rte	ROUTE
RW	REDWOOD,
	RETAINING WALL
R/W	RIGHT OF WAY
Rwy	RAILWAY

S

S	SOUTH,
	SUPPLEMENT
SAE	STRUCTURE APPROACH EMBANKMENT
Salv	SALVAGE
SAPP	STRUCTURAL ALUMINUM PLATE PIPE
SB	SOUTHBOUND
SC	SAND CUSHION
SCSP	SLOTTED CORRUGATED STEEL PIPE
SD	STORM DRAIN
Sec	SECOND,
	SECTION
Sep	SEPARATION
SG	SUBGRADE
Shld	SHOULDER
Sht	SHEET
Sim	SIMILAR
℄	STATION LINE
SM	SELECTED MATERIAL
Spec	SPECIAL,
	SPECIFICATIONS
SPP	SLOTTED PLASTIC PIPE
SS	SLOPE STAKE
SSBM	STRAP AND SADDLE BRACKET METHOD
SSD	STRUCTURAL SECTION DRAIN
SSPA	STRUCTURAL STEEL PLATE ARCH
SSPP	STRUCTURAL STEEL PLATE PIPE
SSPPA	STRUCTURAL STEEL PLATE PIPE ARCH
SSRP	STEEL SPIRAL RIB PIPE
St	STREET
Sta	STATION
STBB	SINGLE THRIE BEAM BARRIER
Std	STANDARD
Str	STRUCTURE
Surf	SURFACING
SW	SIDEWALK,
	SOUND WALL
Swr	SEWER
Sym	SYMMETRICAL
S4S	SURFACE 4 SIDES

T

T	SEMI-TANGENT
Tan	TANGENT
TBB	THRIE BEAM BARRIER
Tbr	TIMBER
TC	TOP OF CURB
TCB	TRAFFIC CONTROL BOX
TCE	TEMPORARY CONSTRUCTION EASEMENT
Tel	TELEPHONE
Temp	TEMPORARY
TG	TOP OF GRADE
Tot	TOTAL
TP	TELEPHONE POLE
TPB	TREATED PERMEABLE BASE
TPM	TREATED PERMEABLE MATERIAL
Trans	TRANSITION

T continued

TS	TRANSVERSE,
	TRAFFIC SIGNAL,
	TUBULAR STEEL
Typ	TYPICAL

U

UC	UNDERCROSSING
UD	UNDERDRAIN
UG	UNDERGROUND
UON	UNLESS OTHERWISE NOTED
UP	UNDERPASS

V

V	VALVE,
	DESIGN SPEED
Var	VARIABLE,
	VARIES
VC	VERTICAL CURVE
VCP	VITRIFIED CLAY PIPE
Vert	VERTICAL
Via	VIADUCT
Vol	VOLUME

W

W	WEST,
	WIDTH
WB	WESTBOUND
WH	WEEP HOLE
WM	WIRE MESH
WS	WATER SURFACE
WSP	WELDED STEEL PIPE
Wt	WEIGHT
WV	WATER VALVE
WW	WINGWALL
WWLOL	WINGWALL LAYOUT LINE

X

X Sec	CROSS SECTION
Xing	CROSSING

Y

Yr	YEAR
Yrs	YEARS

Dist	COUNTY	ROUTE	POST MILES TOTAL PROJECT	SHEET No.	TOTAL SHEETS
03	Sac	160	L7.0	36	61

Grace M. Tsushima
REGISTERED CIVIL ENGINEER

July 19, 2013
PLANS APPROVAL DATE

REGISTERED PROFESSIONAL ENGINEER Grace M. Tsushima No. C49814 Exp. 9-30-14 CIVIL STATE OF CALIFORNIA

THE STATE OF CALIFORNIA OR ITS OFFICERS OR AGENTS SHALL NOT BE RESPONSIBLE FOR THE ACCURACY OR COMPLETENESS OF SCANNED COPIES OF THIS PLAN SHEET.

TO ACCOMPANY PLANS DATED 11-17-14

UNIT OF MEASUREMENT SYMBOLS:

Some of the symbols used in the project plan quantity tables and in the Bid Item List are:

TABLE A

SYMBOL USED	DEFINITIONS
ACRE	ACRE
CF	CUBIC FOOT
CY	CUBIC YARD
EA	EACH
GAL	GALLON
LB	POUND
LF	LINEAR FOOT
SQFT	SQUARE FOOT
SQYD	SQUARE YARD
STA	100 FEET
TAB	TABLET
TON	2,000 POUNDS

Some of the symbols used in the plans other than in the project plan quantity tables are:

TABLE B

SYMBOL USED	DEFINITIONS
ksi	KIPS PER SQUARE INCH
ksf	KIPS PER SQUARE FOOT
psi	POUNDS PER SQUARE INCH
psf	POUNDS PER SQUARE FOOT
lb/ft^3, pcf	POUNDS PER CUBIC FOOT
tsf	TONS PER SQUARE FOOT
mph, MPH *	MILES PER HOUR
ø	NOMINAL DIAMETER
oz	OUNCE
lb	POUND
kip	1,000 POUNDS
cal	CALORIE
ft	FOOT OR FEET
gal	GALLON

* For use on a sign panel only

STATE OF CALIFORNIA
DEPARTMENT OF TRANSPORTATION

ABBREVIATIONS (SHEET 2 OF 2)

NO SCALE

RSP A10B DATED JULY 19, 2013 SUPERSEDES STANDARD PLAN A10B DATED MAY 20, 2011 - PAGE 2 OF THE STANDARD PLANS BOOK DATED 2010.

REVISED STANDARD PLAN RSP A10B

2010 REVISED STANDARD PLAN RSP A10B

6-7-13

Dist	COUNTY	ROUTE	POST MILES TOTAL PROJECT	SHEET No.	TOTAL SHEETS
03	Sac	160	L7.0	37	61

REGISTERED CIVIL ENGINEER

July 20, 2012
PLANS APPROVAL DATE

REGISTERED PROFESSIONAL ENGINEER
Roberta L. McLaughlin
No. C40375
Exp. 3-31-13
CIVIL
STATE OF CALIFORNIA

THE STATE OF CALIFORNIA OR ITS OFFICERS OR AGENTS SHALL NOT BE RESPONSIBLE FOR THE ACCURACY OR COMPLETENESS OF SCANNED COPIES OF THIS PLAN SHEET.

TO ACCOMPANY PLANS DATED 11-17-14

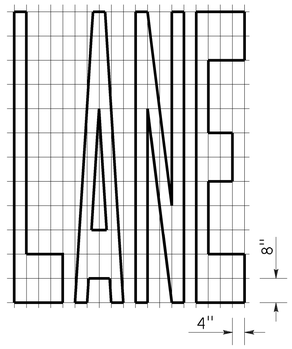

A=24 ft^2

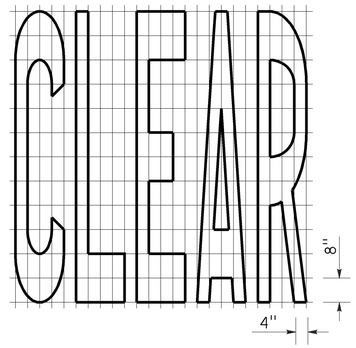

A=27 ft^2

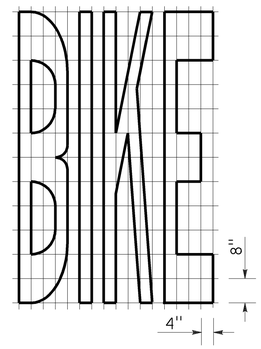

A=21 ft^2

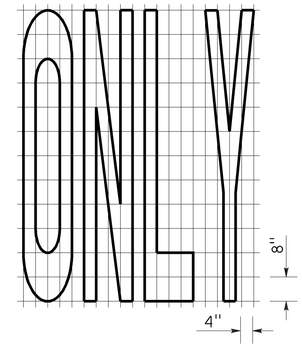

A=22 ft^2

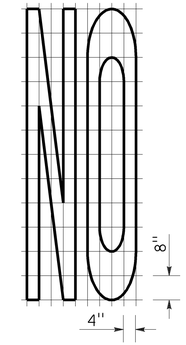

A=14 ft^2

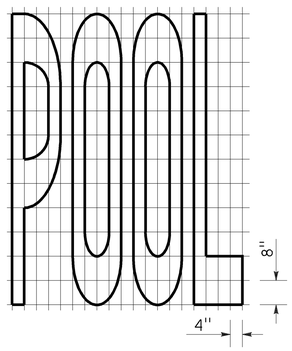

A=23 ft^2

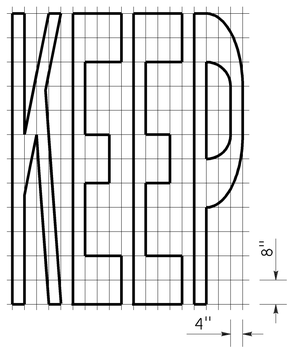

A=24 ft^2

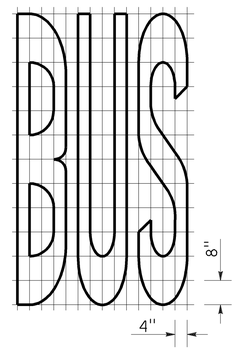

A=20 ft^2

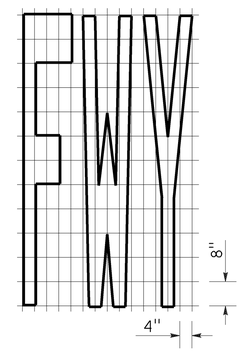

A=16 ft^2

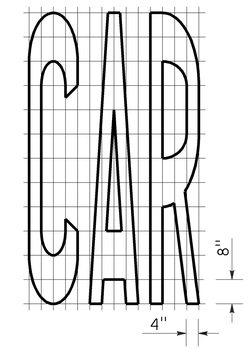

A=17 ft^2

WORD MARKINGS			
ITEM	ft^2	ITEM	ft^2
LANE	24	NO	14
POOL	23	BIKE	21
CAR	17	BUS	20
CLEAR	27	ONLY	22
KEEP	24	FWY	16

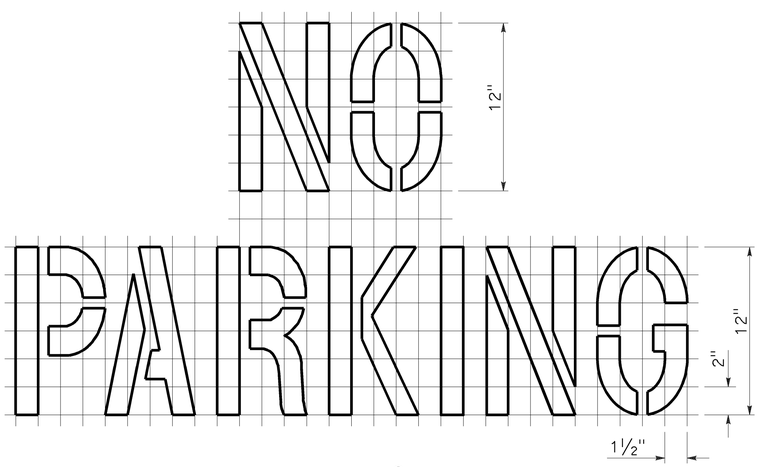

A=2 ft^2
See Notes 6 and 7

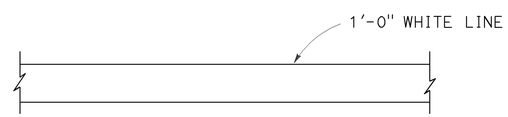

LIMIT LINE (STOP LINE)

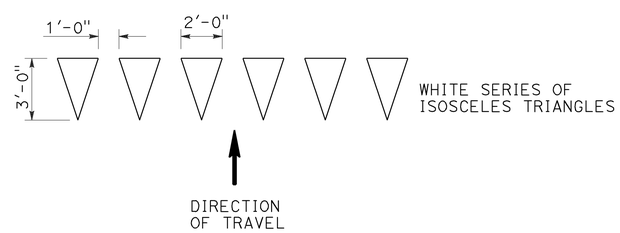

YIELD LINE

NOTES:

1. If a message consists of more than one word, it should read "UP", i.e., the first word should be nearest the driver.
2. The space between words should be at least four times the height of the characters for low speed roads, but not more than ten times the height of the characters. The space may be reduced appropriately where there is limited space because of local conditions.
3. Minor variations in dimensions may be accepted by the Engineer.
4. Portions of a letter, number or symbol may be separated by connecting segments not to exceed 2" in width.
5. The words "NO PARKING" pavement marking is to be used for parking facilities. For typical locations of markings, see Standard Plans A90A and A90B.
6. The words "NO PARKING", shall be painted in white letters no less than 1'-0" high on a contrasting background and located so that it is visible to traffic enforcement officials.

STATE OF CALIFORNIA
DEPARTMENT OF TRANSPORTATION

PAVEMENT MARKINGS WORDS, LIMIT AND YIELD LINES

NO SCALE

RSP A24E DATED JULY 20, 2012 SUPERSEDES STANDARD PLAN A24E
DATED MAY 20, 2011 - PAGE 17 OF THE STANDARD PLANS BOOK DATED 2010.

REVISED STANDARD PLAN RSP A24E

2010 REVISED STANDARD PLAN RSP A24E

6-12-12

Dist	COUNTY	ROUTE	POST MILES TOTAL PROJECT	SHEET No.	TOTAL SHEETS
03	Sac	160	L7.0	38	61

REGISTERED CIVIL ENGINEER

July 19, 2013
PLANS APPROVAL DATE

REGISTERED PROFESSIONAL ENGINEER Gurinderpal Bhullar No. C48815 Exp. 9-30-14 CIVIL STATE OF CALIFORNIA

THE STATE OF CALIFORNIA OR ITS OFFICERS OR AGENTS SHALL NOT BE RESPONSIBLE FOR THE ACCURACY OR COMPLETENESS OF SCANNED COPIES OF THIS PLAN SHEET.

TO ACCOMPANY PLANS DATED 11-17-14

2010 REVISED STANDARD PLAN RSP T9

TABLE 1

TAPER LENGTH CRITERIA AND CHANNELIZING DEVICE SPACING

SPEED (S)	MINIMUM TAPER LENGTH * FOR WIDTH OF OFFSET 12 FEET (W)				MAXIMUM CHANNELIZING DEVICE SPACING		
					X	Y	Z **
	TANGENT 2L	MERGING L	SHIFTING L/2	SHOULDER L/3	TAPER	TANGENT	CONFLICT
mph	ft	ft	ft	ft	ft	ft	ft
20	160	80	40	27	20	40	10
25	250	125	63	42	25	50	12
30	360	180	90	60	30	60	15
35	490	245	123	82	35	70	17
40	640	320	160	107	40	80	20
45	1080	540	270	180	45	90	22
50	1200	600	300	200	50	100	25
55	1320	660	330	220	55	110	27
60	1440	720	360	240	60	120	30
65	1560	780	390	260	65	130	32
70	1680	840	420	280	70	140	35

* - For other offsets, use the following merging taper length formula for L:
For speed of 40 mph or less, $L = WS^2/60$
For speed of 45 mph or more, $L = WS$

Where: L = Taper length in feet
W = Width of offset in feet
S = Posted speed limit, off-peak 85th-percentile speed prior to work starting, or the anticipated operating speed in mph

** - Use for taper and tangent sections where there are no pavement markings or where there is a conflict between existing pavement markings and channelizers (CA).

TABLE 2

LONGITUDINAL BUFFER SPACE AND FLAGGER STATION SPACING

SPEED *	Min D **	DOWNGRADE Min D ***		
		-3%	-6%	-9%
mph	ft	ft	ft	ft
20	115	116	120	126
25	155	158	165	173
30	200	205	215	227
35	250	257	271	287
40	305	315	333	354
45	360	378	400	427
50	425	446	474	507
55	495	520	553	593
60	570	598	638	686
65	645	682	728	785
70	730	771	825	891

* - Speed is posted speed limit, off-peak 85th-percentile speed prior to work starting, or the anticipated operating speed in mph

** - Longitudinal buffer space or flagger station spacing

*** - Use on sustained downgrade steeper than -3 percent and longer than 1 mile.

TABLE 3

ADVANCE WARNING SIGN SPACING

ROAD TYPE	DISTANCE BETWEEN SIGNS *		
	A	B	C
	ft	ft	ft
URBAN - 25 mph OR LESS	100	100	100
URBAN - MORE THAN 25 mph TO 40 mph	250	250	250
URBAN - MORE THAN 40 mph	350	350	350
RURAL	500	500	500
EXPRESSWAY / FREEWAY	1000	1500	2640

* - The distances are approximate, are intended for guidance purposes only, and should be applied with engineering judgment. These distances should be adjusted by the Engineer for field conditions, if necessary, by increasing or decreasing the recommmended distances.

STATE OF CALIFORNIA
DEPARTMENT OF TRANSPORTATION

TRAFFIC CONTROL SYSTEM TABLES FOR LANE AND RAMP CLOSURES

NO SCALE

RSP T9 DATED JULY 19, 2013 SUPERSEDES RSP T9 DATED APRIL 19, 2013 THAT SUPPLEMENTS THE STANDARD PLANS BOOK DATED 2010.

REVISED STANDARD PLAN RSP T9

4-30-13

Dist	COUNTY	ROUTE	POST MILES TOTAL PROJECT	SHEET No.	TOTAL SHEETS
03	Sac	160	L7.0	39	61

Devinder Singh
REGISTERED CIVIL ENGINEER

October 17, 2014
PLANS APPROVAL DATE

REGISTERED PROFESSIONAL ENGINEER
Devinder Singh
No. C50470
Exp. 6-30-15
CIVIL
STATE OF CALIFORNIA

THE STATE OF CALIFORNIA OR ITS OFFICERS OR AGENTS SHALL NOT BE RESPONSIBLE FOR THE ACCURACY OR COMPLETENESS OF SCANNED COPIES OF THIS PLAN SHEET.

TO ACCOMPANY PLANS DATED 11-17-14

NOTES:

See Revised Standard Plan RSP T9 for tables.

Use cone spacing X for taper segment, Y for tangent segment or Z for conflict situations, as approriate, per Table 1, unless X, Y, or Z cone spacing is shown on this sheet.

Unless otherwise specified in the special provisions, all temporary warning signs shall have black legend on fluorescent orange background.

California codes are designated by (CA). Otherwise, Federal (MUTCD) codes are shown.

TYPICAL LANE CLOSURE WITH REVERSIBLE CONTROL

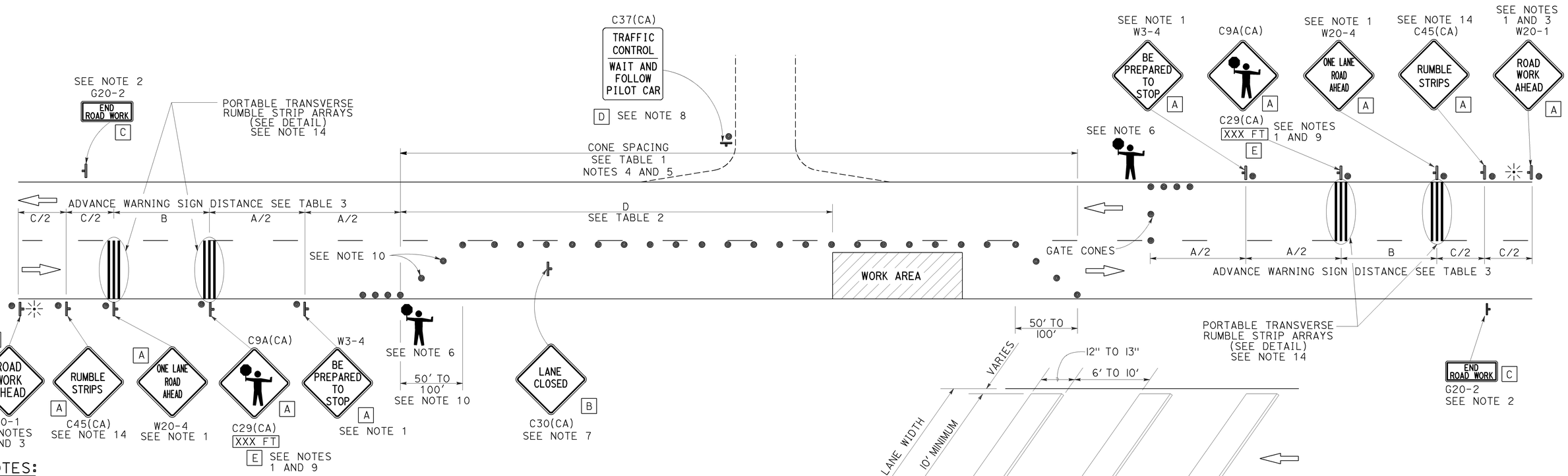

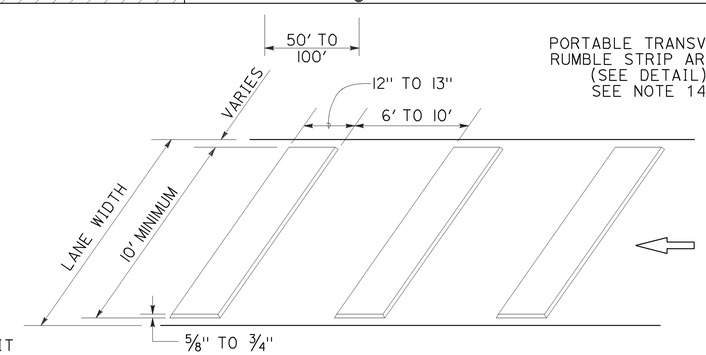

PORTABLE TRANSVERSE RUMBLE STRIP ARRAY DETAIL

NOTES:

1. Each advance warning sign in each direction of travel shall be equipped with at least two flags for daytime closure. Each flag shall be at least 16" x 16" in size and shall be orange or fluorescent red-orange in color. Flashing beacons shall be placed at the locations indicated for lane closure during hours of darkness.
2. A G20-2 "END ROAD WORK" sign, as appropriate, shall be placed at the end of the lane control unless the end of work area is obvious, or ends within a larger project's limits.
3. If the W20-1 sign would follow within 2000' of a stationary W20-1 or G20-1 "ROAD WORK NEXT _____ MILES", use a W20-4 sign for the first advance warning sign.
4. All cones used for lane closures during the hours of darkness shall be fitted with retroreflective bands (or sleeves) as specified in the specifications.
5. Portable delineators, placed at one-half the spacing indicated for traffic cones, may be used instead of cones for daytime closures only.
6. Additional advance flaggers may be required. Flagger should stand in a conspicuous place, be visible to approaching traffic as well as approaching vehicles after the first vehicle has stopped. During the hours of darkness, the flagging-station and flagger shall be illuminated and clearly visible to approaching traffic. The illumination footprint of the lighting on the ground shall be at least 20' in diameter. Place a minimum of four cones at 50' intervals in advance of flagger station as shown.
7. Place C30(CA) "LANE CLOSED" sign at 500' to 1000' intervals throughout extended work areas. They are optional if the work area is visible from the flagger station.
8. When a pilot car is used, place a C37(CA) "TRAFFIC CONTROL-WAIT AND FOLLOW PILOT CAR" sign with black legend on white background at all intersections, driveways and alleys without a flagger within traffic control area. Signs shall be clean and visible at all times. Where traffic can not be effectively self-regulated, at least one flagger shall be used at each intersection within traffic control area.
9. An optional C29(CA) sign may be placed below the C9A(CA) sign.
10. Either traffic cones or barricades shall be placed on the taper. Barricades shall be Type I, II, or III.
11. The color of the portable transverse rumble strips shall be black or orange. Use 2 arrays, each array shall consist of 3 rumble strips.
12. Portable transverse rumble strips shall not be placed on sharp horizontal or vertical curves nor shall they be placed through pedestrian crossings.
13. If the portable transverse rumble strips become out of alignment (skewed) by more than 6 inches, measured from one end to the other, they shall be readjusted to bring the placement back to the original location.
14. Portable transverse rumble strips are not required if any one of the following conditions is satisfied:
    A. Work duration occupies a location for four hours or less
    B. Posted speed limit is below 45 MPH
    C. Work is of emergency nature
    D. Work zone is in snow or icy weather conditions

LEGEND

- TRAFFIC CONE
- TEMPORARY TRAFFIC CONTROL SIGN
- PORTABLE FLASHING BEACON
- FLAGGER

SIGN PANEL SIZE (Min)

A	48" x 48"
B	30" x 30"
C	36" x 18"
D	36" x 42"
E	20" x 7"

STATE OF CALIFORNIA
DEPARTMENT OF TRANSPORTATION

TRAFFIC CONTROL SYSTEM FOR LANE CLOSURE ON TWO LANE CONVENTIONAL HIGHWAYS

NO SCALE

RSP T13 DATED OCTOBER 17, 2014 SUPERSEDES RSP T13 DATED JULY 18, 2014 AND RSP T13 DATED APRIL 19, 2013 AND STANDARD PLAN T13 DATED MAY 20, 2011 - PAGE 241 OF THE STANDARD PLANS BOOK DATED 2010.

REVISED STANDARD PLAN RSP T13

2010 REVISED STANDARD PLAN RSP T13

9-26-14

Dist	COUNTY	ROUTE	POST MILES TOTAL PROJECT	SHEET No.	TOTAL SHEETS
03	Sac	160	L7.0	40	61

Theresa Gabriel
REGISTERED ELECTRICAL ENGINEER

July 19, 2013
PLANS APPROVAL DATE

REGISTERED PROFESSIONAL ENGINEER Theresa Aziz Gabriel No. E15129 Exp. 6-30-14 ELECTRICAL STATE OF CALIFORNIA

THE STATE OF CALIFORNIA OR ITS OFFICERS OR AGENTS SHALL NOT BE RESPONSIBLE FOR THE ACCURACY OR COMPLETENESS OF SCANNED COPIES OF THIS PLAN SHEET.

TO ACCOMPANY PLANS DATED 11-17-14

LEGEND:

AB	ABANDON. IF APPLIED TO CONDUIT, REMOVE CONDUCTORS
BC	INSTALL PULL BOX IN EXISTING CONDUIT RUN
BP	PEDESTRIAN BARRICADE, TYPE AS INDICATED ON PLAN
CB	INSTALL CONDUIT INTO EXISTING PULL BOX
CC	CONNECT NEW AND EXISTING CONDUIT. REMOVE EXISTING CONDUCTORS AND INSTALL CONDUCTORS AS INDICATED
CF	CONDUIT TO REMAIN FOR FUTURE USE. REMOVE CONDUCTORS. INSTALL PULL TAPE
DH	DETECTOR HANDHOLE
FA	FOUNDATION TO BE ABANDONED
IS	INSTALL SIGN ON SIGNAL MAST ARM
NS	NO SLIP BASE ON STANDARD
PEC	PHOTOELECTRIC CONTROL
PEU	PHOTOELECTRIC UNIT
RC	EQUIPMENT OR MATERIAL TO BE REMOVED AND BECOME THE PROPERTY OF THE CONTRACTOR
RE	REMOVE ELECTROLIER, FUSES AND BALLAST. TAPE ENDS OF CONDUCTORS
RL	RELOCATE EQUIPMENT
RR	REMOVE AND REUSE EQUIPMENT
RS	REMOVE AND SALVAGE EQUIPMENT
SC	SPLICE NEW TO EXISTING CONDUCTORS
SD	SERVICE DISCONNECT
TSP	TELEPHONE SERVICE POINT

ABBREVIATIONS

APS	ACCESSIBLE PEDESTRIAN SIGNAL
BBS	BATTERY BACKUP SYSTEM
BC	BOLT CIRCLE
BPB	BICYCLE PUSH BUTTON
C	CONDUIT
CB	CIRCUIT BREAKER
CCTV	CLOSED CIRCUIT TELEVISION
Ckt	CIRCUIT
CMS	CHANGEABLE MESSAGE SIGN
Ctid	CALTRANS IDENTIFICATION
Comm	COMMUNICATION
DLC	LOOP DETECTOR LEAD-IN CABLE
EMS	EXTINGUISHABLE MESSAGE SIGN
EVUC	EMERGENCY VEHICLE UNIT CABLE
EVUD	EMERGENCY VEHICLE UNIT DETECTOR
FB	FLASHING BEACON
FBCA	FLASHING BEACON CONTROL ASSEMBLY
FBS	FLASHING BEACON WITH SLIP BASE
FO	FIBER OPTIC
G	EQUIPMENT GROUNDING CONDUCTOR
GB	GROUND BUS
GFCI	GROUND FAULT CIRCUIT INTERRUPTER
HAR	HIGHWAY ADVISORY RADIO
Hex	HEXAGONAL
HPS	HIGH PRESSURE SODIUM
IISNS	INTERNALLY ILLUMINATED STREET NAME SIGN
ISL	INDUCTION SIGN LIGHTING
LED	LIGHT EMITTING DIODE
LMA	LUMINAIRE MAST ARM
LPS	LOW PRESSURE SODIUM
Ltg	LIGHTING
Lum	LUMINAIRE
M	METERED
MAT	MAST ARM MOUNTING TOP ATTACHMENT
MAS	MAST ARM MOUNTING SIDE ATTACHMENT
M/M	MULTIPLE TO MULTIPLE TRANSFORMER
Mtg	MOUNTING
MV	MERCURY VAPOR LIGHTING FIXTURE
MVDS	MICROWAVE VEHICLE DETECTION SYSTEM
N	NEUTRAL (GROUNDED CONDUCTOR)
NB	NEUTRAL BUS
NC	NORMALLY CLOSE
NO	NORMALLY OPEN
P	CIRCUIT BREAKER'S POLE
PB	PULL BOX
PBA	PUSH BUTTON ASSEMBLY
PEC	PHOTOELECTRIC CONTROL
Ped	PEDESTRIAN
PEU	PHOTOELECTRIC UNIT
PT	CONDUIT WITH PULL TAPE
RE	RELOCATED EQUIPMENT
RM	RAMP METERING
RWIS	ROADSIDE WEATHER INFORMATION SYSTEM
SB	SLIP BASE
SIC	SIGNAL INTERCONNECT CABLE
Sig	SIGNAL
SMA	SIGNAL MAST ARM
SNS	STREET NAME SIGN
SP	SERVICE POINT
TDC	TELEPHONE DEMARCATION CABINET
TMS	TRAFFIC MONITORING STATION
TOS	TRAFFIC OPERATIONS SYSTEM
Veh	VEHICLE
VIVDS	VIDEO IMAGE VEHICLE DETECTION SYSTEM
WIM	WEIGH-IN-MOTION
Xfmr	TRANSFORMER

SOFFIT AND WALL MOUNTED LUMINAIRES

PENDANT, 70 W HPS UNLESS OTHERWISE SPECIFIED

FLUSH, 70 W HPS UNLESS OTHERWISE SPECIFIED

WALL SURFACE, 70 W HPS UNLESS OTHERWISE SPECIFIED

EXISTING SOFFIT OR WALL LUMINAIRE TO REMAIN UNMODIFIED

EXISTING SOFFIT OR WALL LUMINAIRE TO BE MODIFIED AS SPECIFIED

NOTE:

Arrow indicates "street side" of luminaire.

COMMONLY USED SYMBOLS FOR UNITED STATES CUSTOMARY UNITS OF MEASUREMENT:

SYMBOL USED	DEFINITIONS
Ω	OHMS
min	MINUTE
s	SECOND
bps	BITS PER SECOND
Bps	BYTES PER SECOND
A	AMPERE
V	VOLT
V(dc)	VOLT (DIRECT CURRENT)
V(ac)	VOLT (ALTERNATING CURRENT)
FC	FOOT - CANDLE
W	WATTS
VA	VOLT-AMPERE
M	MEGA
k	KILO
m	MILLI
μ	MICRO
P	PICO
Hz	HERTZ

MISCELLANEOUS ELECTROLIERS

NEW	EXISTING	
		LUMINAIRE ON WOOD POLE
		NON-STANDARD ELECTROLIER (SEE PROJECT NOTES OR PROJECT PLANS)
		CITY ELECTROLIER
		ELECTROLIER FOUNDATION (FUTURE INSTALLATION)

NOTES:

1. HPS luminaires shall be 310 W HPS when installed on Type 21, 21D, 30, 31 and 32 Standards, unless otherwise specified. HPS luminaires shall be 200 W when installed on other type standards or poles, unless otherwise specified.
2. LED luminaires shall be 235 W when installed on Type 21, 21D, 30, 31 and 32 Standards, unless otherwise specified. LED luminaires shall be 165 W when installed on other type standards or poles, unless otherwise specified.
3. Luminaires shall be the cutoff type, ANSI Type III medium cutoff lighting distribution, unless otherwise specified.

STANDARD ELECTROLIER

NEW	EXISTING	STANDARD TYPE
		15
		15D
		15 STRUCTURE
		15D STRUCTURE
		21
		21D
		21 STRUCTURE
		21D STRUCTURE
		30
		31
		32

STATE OF CALIFORNIA
DEPARTMENT OF TRANSPORTATION

ELECTRICAL SYSTEMS (LEGEND AND ABBREVIATIONS)

NO SCALE

RSP ES-1A DATED JULY 19, 2013 SUPERSEDES STANDARD PLAN ES-1A DATED MAY 20, 2011 - PAGE 425 OF THE STANDARD PLANS BOOK DATED 2010.

REVISED STANDARD PLAN RSP ES-1A

2010 REVISED STANDARD PLAN RSP ES-1A

7-15-13

Dist	COUNTY	ROUTE	POST MILES TOTAL PROJECT	SHEET No.	TOTAL SHEETS
03	Sac	160	L7.0	41	61

Theresa Gabriel
REGISTERED ELECTRICAL ENGINEER

July 19, 2013
PLANS APPROVAL DATE

REGISTERED PROFESSIONAL ENGINEER
Theresa Aziz Gabriel
No. E15129
Exp. 6-30-14
ELECTRICAL
STATE OF CALIFORNIA

THE STATE OF CALIFORNIA OR ITS OFFICERS OR AGENTS SHALL NOT BE RESPONSIBLE FOR THE ACCURACY OR COMPLETENESS OF SCANNED COPIES OF THIS PLAN SHEET.

TO ACCOMPANY PLANS DATED 11-17-14

CONDUIT

NEW	EXISTING	
		LIGHTING CONDUIT, UNLESS OTHERWISE INDICATED OR NOTED
		TRAFFIC SIGNAL CONDUIT
C	c	COMMUNICATION CONDUIT
T	t	TELEPHONE CONDUIT
F	f	FIRE ALARM CONDUIT
FO	fo	FIBER OPTIC CONDUIT
		CONDUIT TERMINATION
R	r	CONDUIT RISER ATTACHED TO THE STRUCTURE OR SERVICE POLE

SERVICE EQUIPMENT

NEW	EXISTING	
OH	oh	OVERHEAD LINES
U	U	WOOD POLE, "U" INDICATES UTILITY OWNED
		POLE GUY WITH ANCHOR
		UTILITY TRANSFORMER - GROUND MOUNTED
III	III	SERVICE EQUIPMENT ENCLOSURE TYPE. DOOR INDICATES FRONT OF ENCLOSURE
T	t	TELEPHONE DEMARCATION CABINET

POLE-MOUNTED SERVICE DESIGNATION

TYPE H SERVICE, 28'-10" — TYPE OF INSTALLATION AND POLE HEIGHT ABOVE GRADE

FLASHING BEACON

NEW	EXISTING	
R	R	FLASHING BEACON (ONE VEHICLE SIGNAL HEAD WITH BACKPLATE AND VISOR) "R" INDICATES RED INDICATION, "Y" INDICATES YELLOW INDICATION
Y Y	Y Y	FLASHING BEACON WITH TYPE 15-FBS STANDARD AND A SIGN.
R R	R R	FLASHING BEACON WITH TYPES 9, 9A OR 9B SIGN UNLESS OTHERWISE SPECIFIED OR INDICATED

SIGNAL EQUIPMENT

NEW	EXISTING	
C	C	PEDESTRIAN SIGNAL HEAD "C" INDICATES COUNTDOWN PEDESTRIAN HEAD
		PUSH BUTTON ASSEMBLY POST
		PEDESTRIAN BARRICADE
		VEHICLE SIGNAL HEAD (WITH BACKPLATE AND 3-SECTIONS: RED, YELLOW AND GREEN)
		VEHICLE SIGNAL HEAD WITH ANGLE VISOR
PV	PV	MODIFICATIONS OF BASIC SYMBOL: "L" INDICATES ALL NON-ARROW SECTIONS LOUVERED "LG" INDICATES LOUVERED GREEN SECTION ONLY "PV" INDICATES ALL 12" SECTIONS PROGRAMMED VISIBILITY "8" INDICATES ALL 8" SECTIONS (ONLY WHEN SPECIFIED)
		VEHICLE SIGNAL HEAD CONSISTING OF RED, YELLOW AND GREEN LEFT ARROW SECTIONS
		VEHICLE SIGNAL HEAD CONSISTING OF RED AND YELLOW SECTIONS WITH AN UP GREEN ARROW SECTION
		VEHICLE SIGNAL HEAD (5 SECTION) CONSISTING OF RED, YELLOW AND GREEN SECTIONS WITH YELLOW AND GREEN RIGHT ARROW SECTIONS
		TYPE 15TS STANDARD WITH VEHICLE SIGNAL HEAD AND LUMINAIRE
		TYPE 21TS STANDARD WITH VEHICLE SIGNAL HEAD AND LUMINAIRE
		STANDARD WITH LUMINAIRE AND SIGNAL MAST ARMS AND ATTACHED VEHICLE SIGNAL HEADS
		TYPE 1 STANDARD WITH ATTACHED VEHICLE SIGNAL HEADS
		STANDARD WITH A SIGNAL MAST ARM, ATTACHED VEHICLE SIGNAL HEADS AND INTERNALLY ILLUMINATED STREET NAME SIGN
		CONTROLLER ASSEMBLY. DOOR INDICATES FRONT OF CABINET

SIGNAL EQUIPMENT Cont

NEW	EXISTING	
		GUARD POST
		TYPE 1 STANDARD WITH RAMP METERING SIGN
		OPTICAL DETECTOR FOR THE EMERGENCY VEHICLE DETECTION SYSTEM

NOTES:

1. All signal sections shall be 12" unless shown otherwise.
2. Signal heads shall be provided with backplates unless shown otherwise.

ILLUMINATED OVERHEAD SIGN

NEW	EXISTING	
		SINGLE POST, SINGLE ILLUMINATED SIGN, BALANCED BUTTERFLY
		SINGLE POST, DOUBLE ILLUMINATED SIGN, BALANCED BUTTERFLY
		SINGLE POST, SINGLE ILLUMINATED SIGN, FULL CANTILEVER
		DOUBLE POST, SINGLE ILLUMINATED SIGN
		SINGLE ILLUMINATED SIGN MOUNTED ON STRUCTURE
		DOUBLE POST, SINGLE ILLUMINATED SIGN WITH ELECTROLIER

STATE OF CALIFORNIA
DEPARTMENT OF TRANSPORTATION

ELECTRICAL SYSTEMS (LEGEND AND ABBREVIATIONS)

NO SCALE

RSP ES-1B DATED JULY 19, 2013 SUPERSEDES STANDARD PLAN ES-1B DATED MAY 20, 2011 - PAGE 426 OF THE STANDARD PLANS BOOK DATED 2010.

REVISED STANDARD PLAN RSP ES-1B

2010 REVISED STANDARD PLAN RSP ES-1B

7-15-13

Dist	COUNTY	ROUTE	POST MILES TOTAL PROJECT	SHEET No.	TOTAL SHEETS
03	Sac	160	L7.0	42	61

Theresa Gabriel
REGISTERED ELECTRICAL ENGINEER

July 19, 2013
PLANS APPROVAL DATE

REGISTERED PROFESSIONAL ENGINEER
Theresa Aziz Gabriel
No. E15129
Exp. 6-30-14
ELECTRICAL
STATE OF CALIFORNIA

THE STATE OF CALIFORNIA OR ITS OFFICERS OR AGENTS SHALL NOT BE RESPONSIBLE FOR THE ACCURACY OR COMPLETENESS OF SCANNED COPIES OF THIS PLAN SHEET.

TO ACCOMPANY PLANS DATED 11-17-14

EQUIPMENT IDENTIFICATION

ILLUMINATED SIGN IDENTIFICATION NUMBER:

SIGN No. 12345
10 ISL SCI 1.0

- SIGN NUMBER - PLACE ON POST OR STRUCTURE
- TRANSFORMER RATING (kVA)
- LIGHTING CONTROL TYPE
- NUMBER AND TYPE OF FIXTURES

} DO NOT PLACE ON STANDARD OR STRUCTURE

ELECTROLIER OR EQUIPMENT IDENTIFICATION NUMBER:

12345 - 15'-0"

- MAST ARM LENGTH, IF SHOWN. DO NOT PLACE ON STANDARD OR STRUCTURE
- EQUIPMENT NUMBER - PLACE ON STANDARD OR STRUCTURE. EXISTING EQUIPMENT NUMBERS ARE SHOWN IN PARENTHESIS

CONDUIT AND CONDUCTOR IDENTIFICATION:

1½"C, 2#10, 15#14, 2 DLC, 12P#18 (PAIR)

- NUMBER AND SIZE OF CONDUCTORS AND CABLES
- SIZE OF CONDUIT IN INCHES

ø1, ø2, ø2P, etc.	TRAFFIC PHASE IDENTIFICATION FOR SIGNAL FACES, DETECTORS AND PHASE DIAGRAMS
1 2 3	LEGEND NUMBERS
A B C	EQUIPMENT, SIGNAL POLES, INSTALLATION OR ITEMS
1 2 3	CONDUIT RUN NUMBERS

SIGNAL AND LIGHTING STANDARD (TYPICAL DESIGNATION):

19A - 3 - 100

- WIND VELOCITY = 100 mph
- CASE 3 ARM LOADING
- STANDARD TYPE
- STANDARD PLAN SHEET NUMBER
- DETAIL, NUMBER, SECTION, TYPE OR ELEVATION

MISCELLANEOUS EQUIPMENT

NEW	EXISTING	
CMS	cms	CHANGEABLE MESSAGE SIGN
		CLOSED CIRCUIT TELEVISION CAMERA
		HIGHWAY ADVISORY RADIO POLE AND ANTENNA
EMS	ems	EXTINGUISHABLE MESSAGE SIGN
M V	m v	DETECTION DEVICE M = MICROWAVE SENSOR V = VIDEO IMAGE SENSOR

WIRING DIAGRAM LEGEND

----	EXTERNAL CONDUCTOR
———	CONDUCTOR OR BUS
	TIE POINT
	CONTACTOR COIL
	CONTACTOR, NO CONTACT
	TERMINAL BLOCKS
	CONTACTOR, NC CONTACT
	ENCLOSURE BOND
	GROUNDING ELECTRODE
	CIRCUIT BREAKER
	RECEPTACLE

PULL BOXES

NEW	EXISTING	
		PULL BOX, No. 5 UNLESS OTHERWISE INDICATED OR NOTED
3	9A(21)	PULL BOX, ADDITIONAL DESIGNATIONS OR DESCRIPTIONS

3 No. 3½ PULL BOX
5 No. 5 PULL BOX
6 No. 6 PULL BOX
7 No. 7 (CEILING PULL BOX)
8 No. 8 (PENDANT SOFFIT PULL BOX)
9 No. 9 PULL BOX
9A No. 9A PULL BOX

(C) COMMUNICATIONS PULL BOX
(E) PULL BOX WITH EXTENSION
(S) SPRINKLER CONTROL PULL BOX
(21) ANCHOR BOLTS AND CONDUIT FOR FUTURE INSTALLATION OF TYPE 21 STANDARD
(T) TRAFFIC PULL BOX

VEHICLE DETECTORS

5 J 9 U

- VEHICLE DETECTOR DESIGNATION
- U = UPPER
  L = LOWER
- SLOT NUMBER IN INPUT FILE
- INPUT FILE (I OR J)
- PHASE

NEW	EXISTING	
		TYPE A DETECTOR LOOP. OUTLINE OF SAWCUT SHOWN
		TYPE B DETECTOR LOOP. OUTLINE OF SAWCUT SHOWN
		TYPE C DETECTOR LOOP. OUTLINE OF SAWCUT SHOWN
		TYPE D DETECTOR LOOP. OUTLINE OF SAWCUT SHOWN
		TYPE E DETECTOR LOOP. OUTLINE OF SAWCUT SHOWN
		TYPE Q DETECTOR LOOP. OUTLINE OF SAWCUT SHOWN
		MAGNETIC DETECTOR
DH	dh	DETECTOR HANDHOLE
		MICROWAVE OR VIDEO DETECTION ZONE

STATE OF CALIFORNIA
DEPARTMENT OF TRANSPORTATION

ELECTRICAL SYSTEMS (LEGEND AND ABBREVIATIONS)

NO SCALE

RSP ES-1C DATED JULY 19, 2013 SUPERSEDES STANDARD PLAN ES-1C DATED MAY 20, 2011 - PAGE 427 OF THE STANDARD PLANS BOOK DATED 2010.

REVISED STANDARD PLAN RSP ES-1C

2010 REVISED STANDARD PLAN RSP ES-1C

7-11-13

Dist	COUNTY	ROUTE	POST MILES TOTAL PROJECT	SHEET No.	TOTAL SHEETS
03	Sac	160	L7.0	43	61

Theresa Gabriel
REGISTERED ELECTRICAL ENGINEER

July 19, 2013
PLANS APPROVAL DATE

REGISTERED PROFESSIONAL ENGINEER
Theresa Aziz Gabriel
No. E15129
Exp. 6-30-14
ELECTRICAL
STATE OF CALIFORNIA

THE STATE OF CALIFORNIA OR ITS OFFICERS OR AGENTS SHALL NOT BE RESPONSIBLE FOR THE ACCURACY OR COMPLETENESS OF SCANNED COPIES OF THIS PLAN SHEET.

TO ACCOMPANY PLANS DATED 11-17-14

2010 REVISED STANDARD PLAN RSP ES-4A

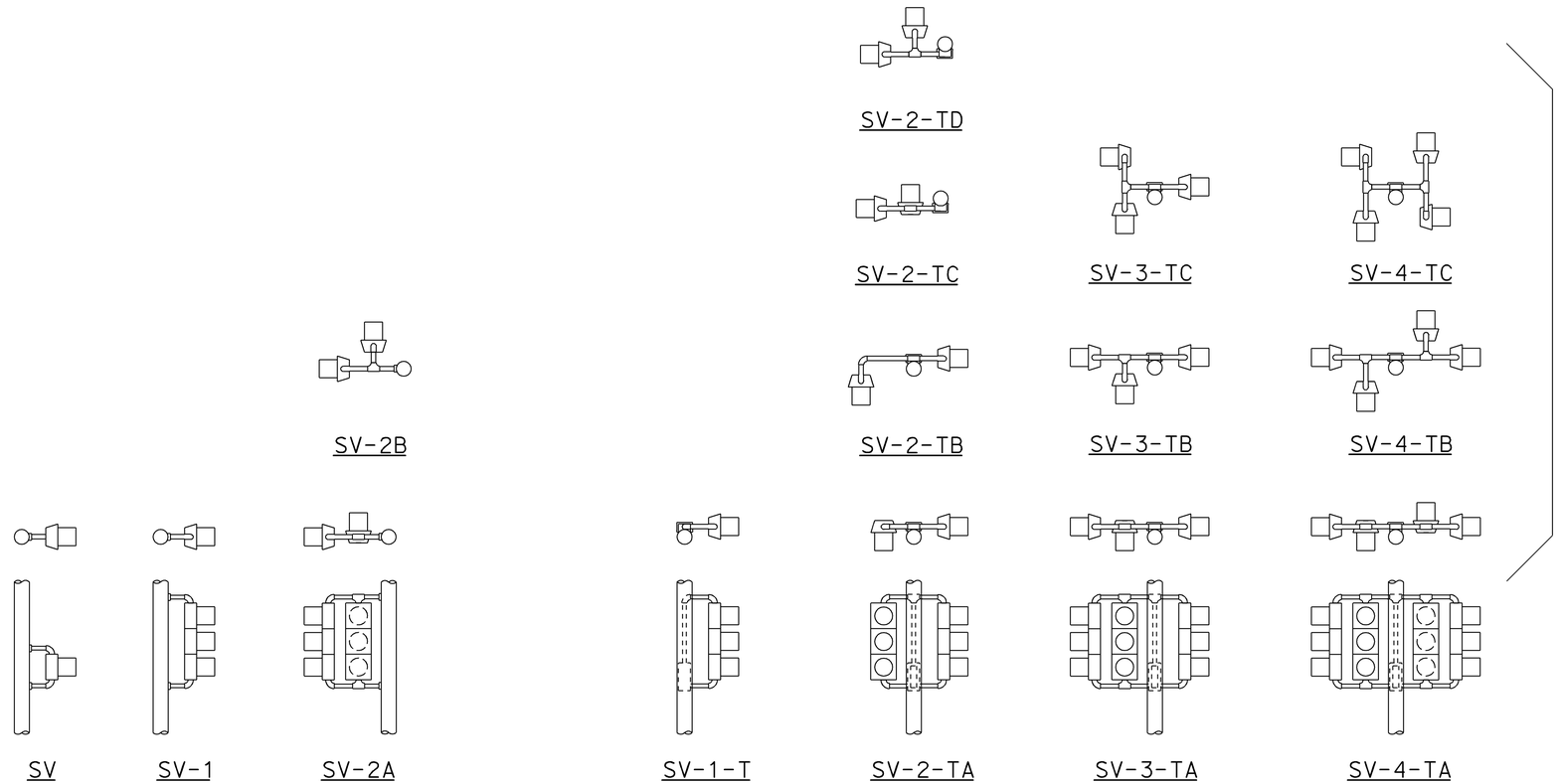

SIDE MOUNTINGS

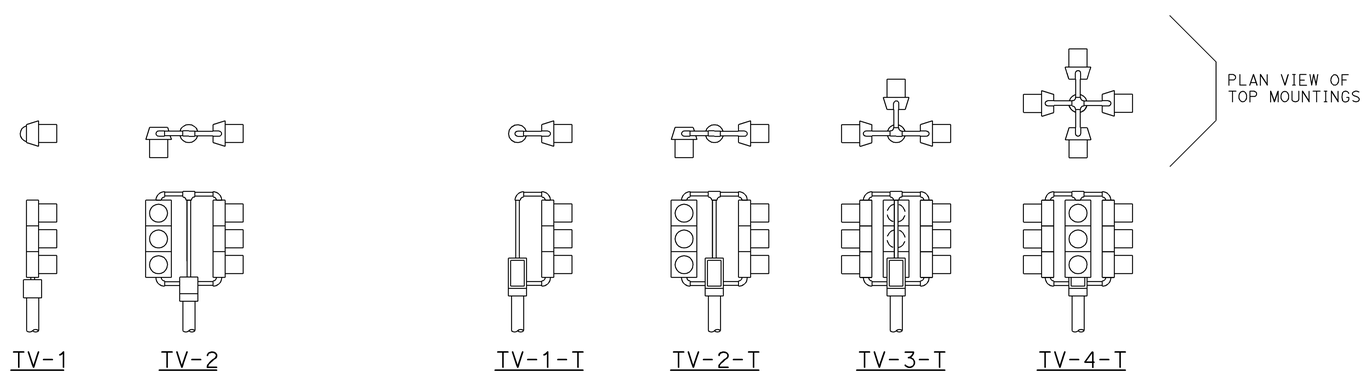

TOP MOUNTINGS

ABBREVIATIONS:

SV	SIDE MOUNTED VEHICLE SIGNALS
T	TERMINAL COMPARTMENT
TV	TOP MOUNTED VEHICLE SIGNALS
1, 2, 3, 4	NUMBER OF SIGNAL FACES (3 - SECTION, UNLESS OTHERWISE INDICATED)
A, B, C, D	CONFIGURATION OF SIGNALS

NOTES:

1. Mountings shall be oriented to provide maximum horizontal clearance to adjacent roadway.
2. Bracket arms shall be long enough to permit proper alignment of signals and backplate installation.
3. See Standard Plans ES-4D and ES-4E for attachment fitting details.

STATE OF CALIFORNIA
DEPARTMENT OF TRANSPORTATION

ELECTRICAL SYSTEMS (VEHICULAR SIGNAL HEADS AND MOUNTINGS)

NO SCALE

RSP ES-4A DATED JULY 19, 2013 SUPERSEDES STANDARD PLAN ES-4A DATED MAY 20, 2011 - PAGE 443 OF THE STANDARD PLANS BOOK DATED 2010.

REVISED STANDARD PLAN RSP ES-4A

7-9-13

Dist	COUNTY	ROUTE	POST MILES TOTAL PROJECT	SHEET No.	TOTAL SHEETS
03	Sac	160	L7.0	44	61

Theresa Gabriel
REGISTERED ELECTRICAL ENGINEER

July 19, 2013
PLANS APPROVAL DATE

REGISTERED PROFESSIONAL ENGINEER
Theresa Aziz Gabriel
No. E15129
Exp. 6-30-14
ELECTRICAL
STATE OF CALIFORNIA

THE STATE OF CALIFORNIA OR ITS OFFICERS OR AGENTS SHALL NOT BE RESPONSIBLE FOR THE ACCURACY OR COMPLETENESS OF SCANNED COPIES OF THIS PLAN SHEET.

TO ACCOMPANY PLANS DATED 11-17-14

VISORS

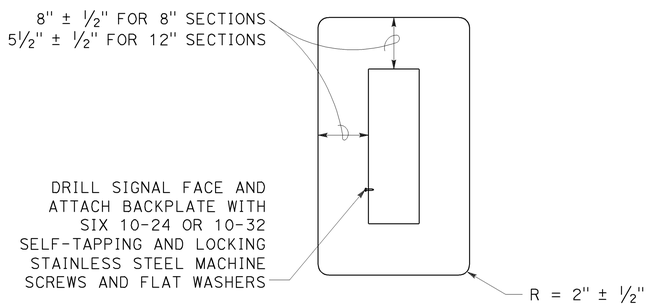

8" AND 12" SECTIONS

BACKPLATE

1/16" minimum thickness
3001-14 aluminum or plastic
when specified

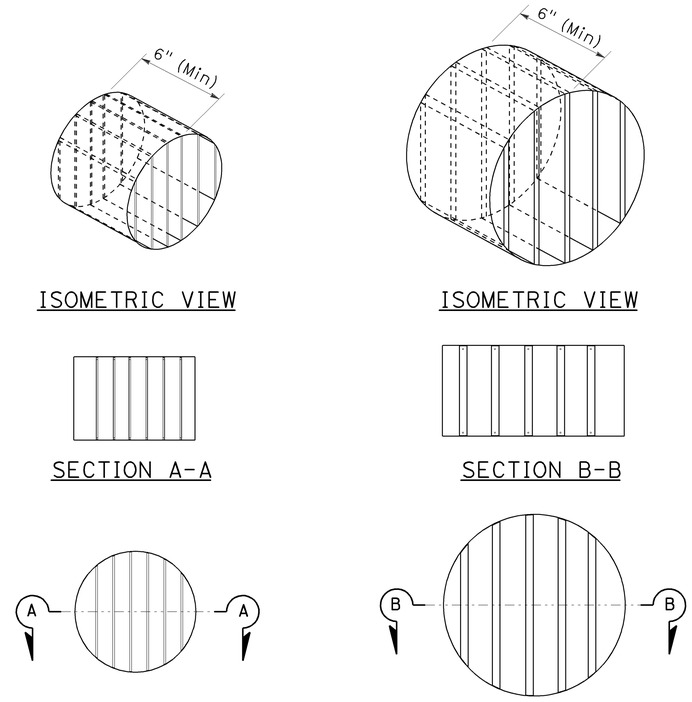

DIRECTIONAL LOUVER

Directional louvers shall be oriented as directed by the Engineer and secured in place with one plated brass machine screw and nut.

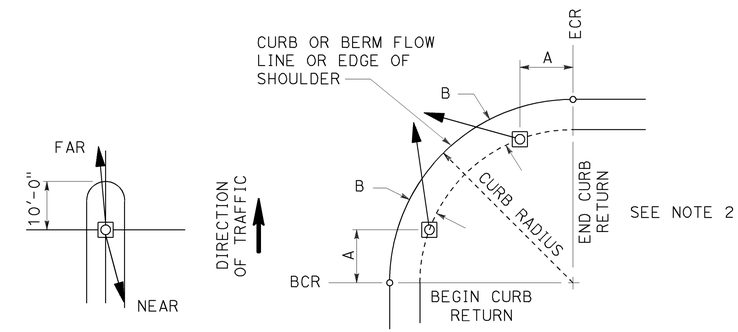

NOTES:

1. Typical signal pole placement unless dimensioned on plans.
2. For A and B dimensions, see Pole Schedule, or as directed by the Engineer.

SIGNAL STANDARD PLACEMENT DIMENSIONS AND EQUIPMENT LOCATIONS

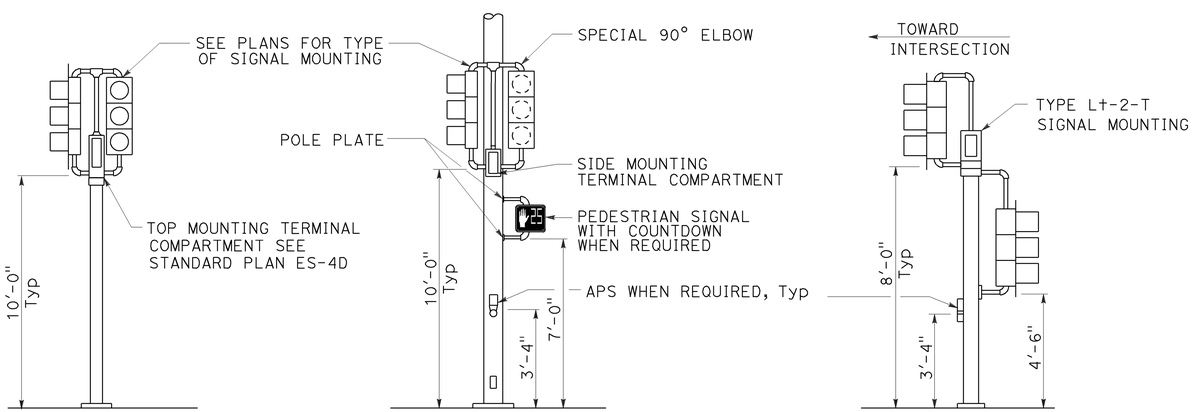

TOP MOUNTED SIGNALS (TV)

Type 1-A, 1-B, 1-C and 1-D standard as indicated on the plans

SIDE MOUNTED SIGNALS (SV AND SP)

Normally used on standards with luminaire or signal mast arm

LEFT TURN LANE SIGNAL

Type 1-A, 1-B, 1-C and 1-D standard as indicated on plans

TYPICAL SIGNAL INSTALLATIONS

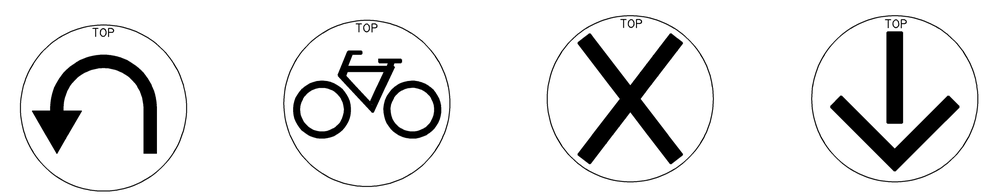

U-TURN | BICYCLE | LANE CONTROL | LANE CONTROL

SIGNAL FACES

STATE OF CALIFORNIA
DEPARTMENT OF TRANSPORTATION

ELECTRICAL SYSTEMS (VEHICULAR SIGNAL HEADS AND MOUNTINGS)

NO SCALE

RSP ES-4C DATED JULY 19, 2013 SUPERSEDES STANDARD PLAN ES-04C DATED MAY 20, 2011 - PAGE 445 OF THE STANDARD PLANS BOOK DATED 2010.

REVISED STANDARD PLAN RSP ES-4C

2010 REVISED STANDARD PLAN RSP ES-4C

7-10-13

Dist	COUNTY	ROUTE	POST MILES TOTAL PROJECT	SHEET No.	TOTAL SHEETS
03	Sac	160	L7.0	45	61

Theresa Gabriel
REGISTERED ELECTRICAL ENGINEER

July 19, 2013
PLANS APPROVAL DATE

REGISTERED PROFESSIONAL ENGINEER
Theresa Aziz Gabriel
No. E15129
Exp. 6-30-14
ELECTRICAL
STATE OF CALIFORNIA

THE STATE OF CALIFORNIA OR ITS OFFICERS OR AGENTS SHALL NOT BE RESPONSIBLE FOR THE ACCURACY OR COMPLETENESS OF SCANNED COPIES OF THIS PLAN SHEET.

TO ACCOMPANY PLANS DATED 11-17-14

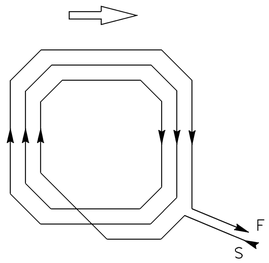

WINDING DETAIL

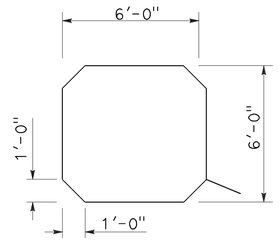

SAWCUT DETAIL

TYPE A LOOP DETECTOR CONFIGURATION

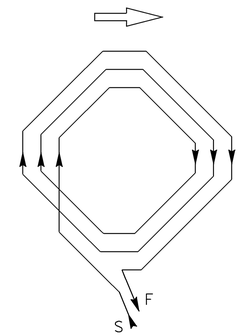

WINDING DETAIL

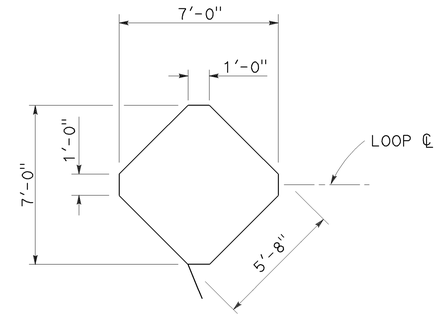

SAWCUT DETAIL

TYPE B LOOP DETECTOR CONFIGURATION

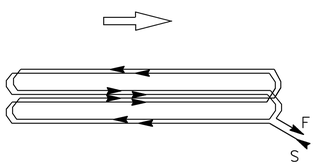

WINDING DETAIL

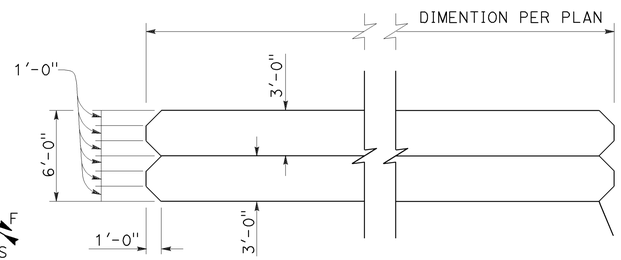

SAWCUT DETAIL

TYPE C LOOP DETECTOR CONFIGURATION

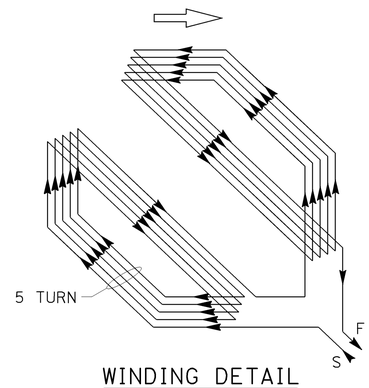

WINDING DETAIL

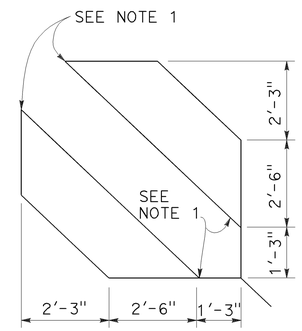

SAWCUT DETAIL

TYPE D LOOP DETECTOR CONFIGURATION

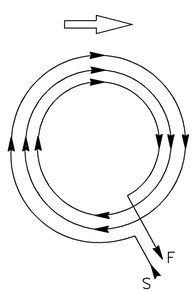

WINDING DETAIL

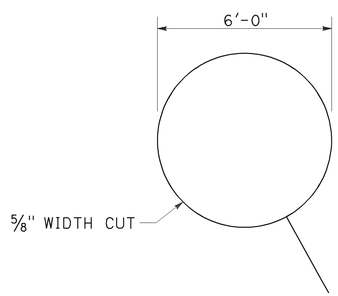

SAWCUT DETAIL

TYPE E LOOP DETECTOR CONFIGURATION

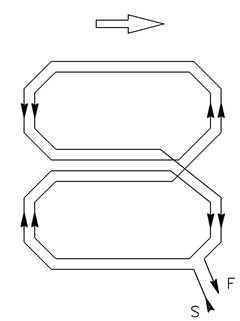

WINDING DETAIL

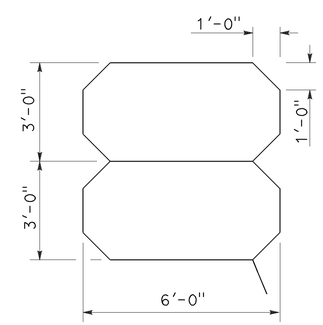

SAWCUT DETAIL

TYPE Q LOOP DETECTOR CONFIGURATION

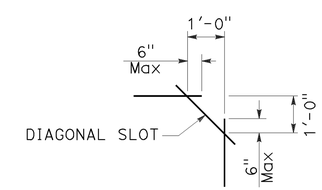

PLAN VIEW OF DIAGONAL SLOT AT CORNERS

NOTES:

1. Round corners of acute angle sawcuts to prevent damage to conductors.
2. Typical distance separating loops from edge to edge is 10' for Type A, B, D and E installation in single lane.

STATE OF CALIFORNIA
DEPARTMENT OF TRANSPORTATION

ELECTRICAL SYSTEMS (DETECTORS)

NO SCALE

RSP ES-5B DATED JULY 19, 2013 SUPERSEDES STANDARD PLAN ES-5B DATED MAY 20, 2011 - PAGE 449 OF THE STANDARD PLANS BOOK DATED 2010.

REVISED STANDARD PLAN RSP ES-5B

2010 REVISED STANDARD PLAN RSP ES-5B

7-9-13

Dist	COUNTY	ROUTE	POST MILES TOTAL PROJECT	SHEET No.	TOTAL SHEETS
03	Sac	160	L7.0	46	61

Theresa Gabriel
REGISTERED ELECTRICAL ENGINEER

July 19, 2013
PLANS APPROVAL DATE

REGISTERED PROFESSIONAL ENGINEER Theresa Aziz Gabriel No. E15129 Exp. 6-30-14 ELECTRICAL STATE OF CALIFORNIA

THE STATE OF CALIFORNIA OR ITS OFFICERS OR AGENTS SHALL NOT BE RESPONSIBLE FOR THE ACCURACY OR COMPLETENESS OF SCANNED COPIES OF THIS PLAN SHEET.

TO ACCOMPANY PLANS DATED 11-17-14

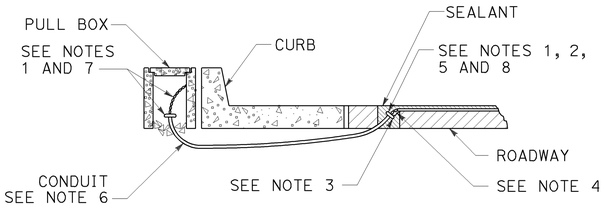

TYPE A
CURB TERMINATION DETAIL

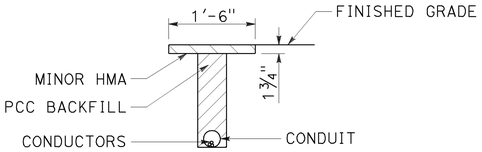

"T" TRENCH
DETAIL T

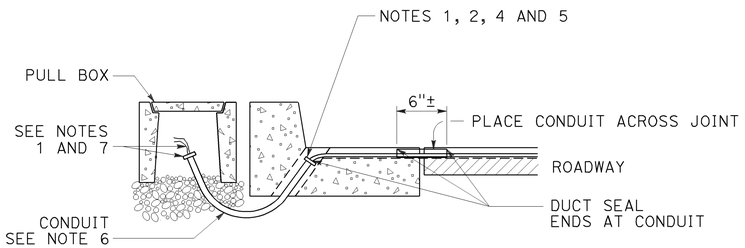

CROSS SECTION

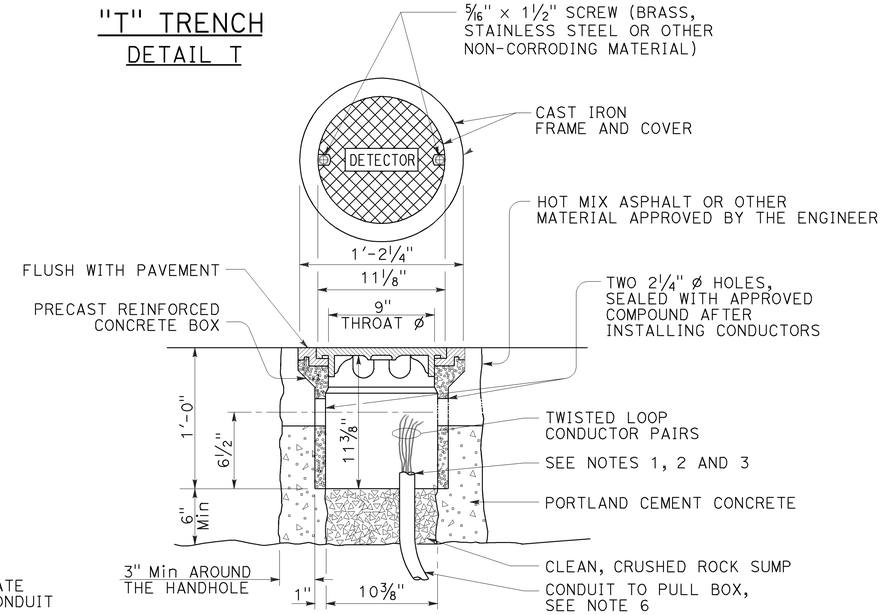

DETECTOR HANDHOLE DETAIL

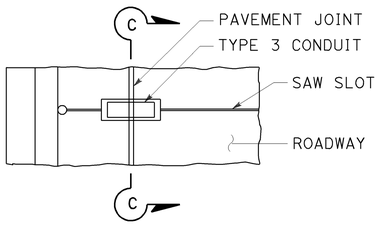

PLAN VIEW

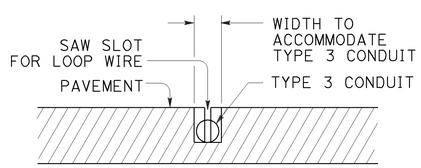

SECTION C-C

TYPE B
CURB TERMINATION DETAIL

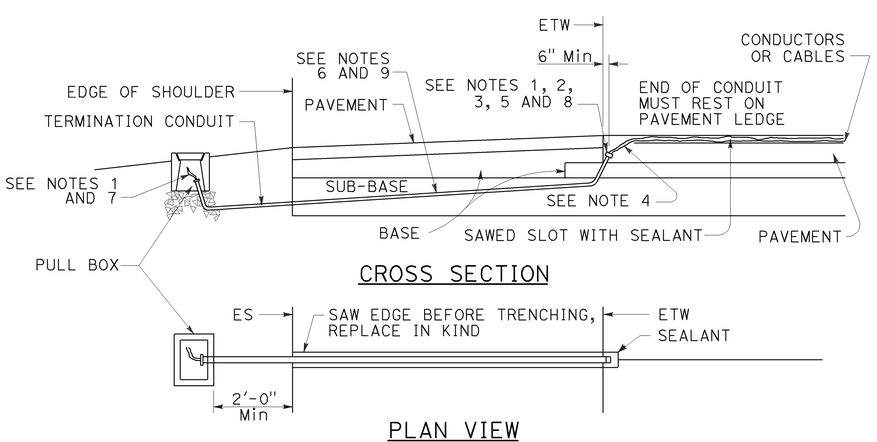

CROSS SECTION

PLAN VIEW

SHOULDER TERMINATION DETAILS

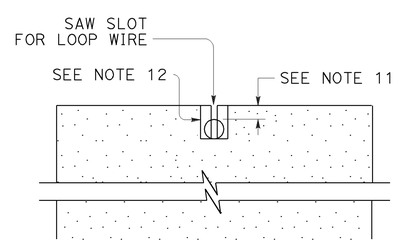

SECTION A-A

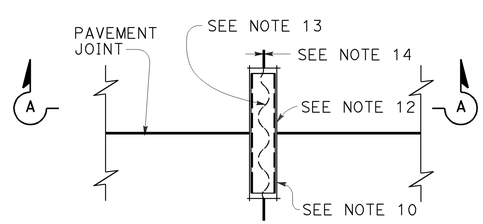

PLAN VIEW

TYPICAL LOOP LEAD-IN DETAIL AT PAVEMENT JOINT

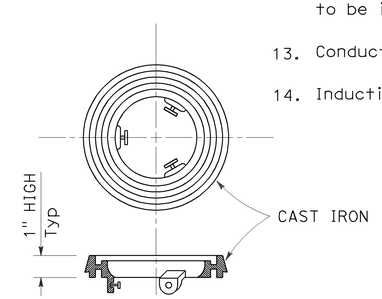

LOCKING GRADE RING

NOTES:

1. Bushing shall be used at end of conduit.
2. Tape detector conductors or cables 3" each side of bushings.
3. Install duct seal compound to each end of termination conduit before installing sealant.
4. Round all sharp edges where detector conductors or cables have to pass.
5. End of conduit shall be 3⅛" below roadway surface.
6. Conduit size / Loop conductors
   - 1"C minimum — 1 to 2 pairs
   - 1½"C minimum — 3 to 4 pairs
   - 2"C minimum — 5 or more pairs
7. Splice detector conductors or cables to detector lead-in-cable.
8. Location of detector handhole when shown on plans.
9. When the shoulder and traveled way are paved with the same material and there is no joint between them, the conduit shall extend only 2'-0" into the shoulder pavement.
10. ¾"C, Type 3 conduit 6" long minimum, plug both ends with duct compound to keep out sealant.
11. ½" Minimum between top of conduit and pavement surface.
12. Sawcut shall not exceed 1" in width and ⅛" longer than conduit to be installed.
13. Conductors with ½" minimum slack inside conduit.
14. Inductive loop detector saw slot.

STATE OF CALIFORNIA
DEPARTMENT OF TRANSPORTATION

ELECTRICAL SYSTEMS (CURB TERMINATION AND HANDHOLE)

NO SCALE

RSP ES-5D DATED JULY 19, 2013 SUPERSEDES STANDARD PLAN ES-5D DATED MAY 20, 2011 - PAGE 451 OF THE STANDARD PLANS BOOK DATED 2010.

REVISED STANDARD PLAN RSP ES-5D

2010 REVISED STANDARD PLAN RSP ES-5D

7-9-13

Dist	COUNTY	ROUTE	POST MILES TOTAL PROJECT	SHEET No.	TOTAL SHEETS
03	Sac	160	L7.0	47	61

REGISTERED CIVIL ENGINEER

July 19, 2013
PLANS APPROVAL DATE

REGISTERED PROFESSIONAL ENGINEER
Stanley P. Johnson
No. C57793
Exp. 3-31-14
CIVIL
STATE OF CALIFORNIA

THE STATE OF CALIFORNIA OR ITS OFFICERS OR AGENTS SHALL NOT BE RESPONSIBLE FOR THE ACCURACY OR COMPLETENESS OF SCANNED COPIES OF THIS PLAN SHEET.

TO ACCOMPANY PLANS DATED 11-17-14

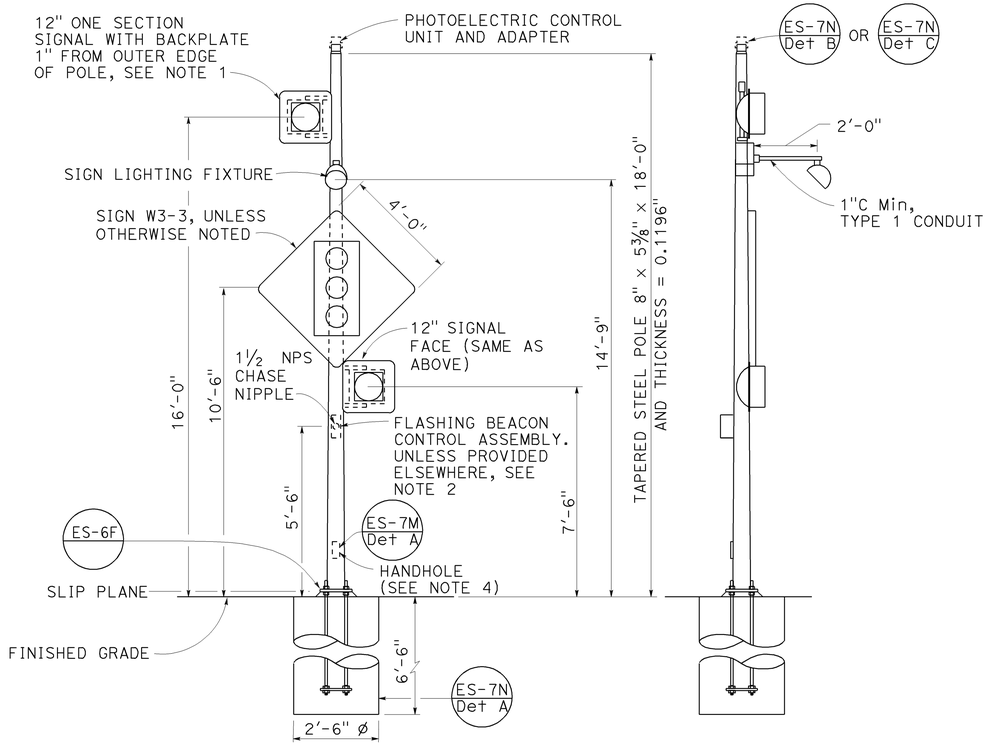

FRONT VIEW

SIDE VIEW

TYPE 15-FBS
ADVANCE FLASHING BEACON WITH SLIP BASE INSTALLATION
DETAIL A

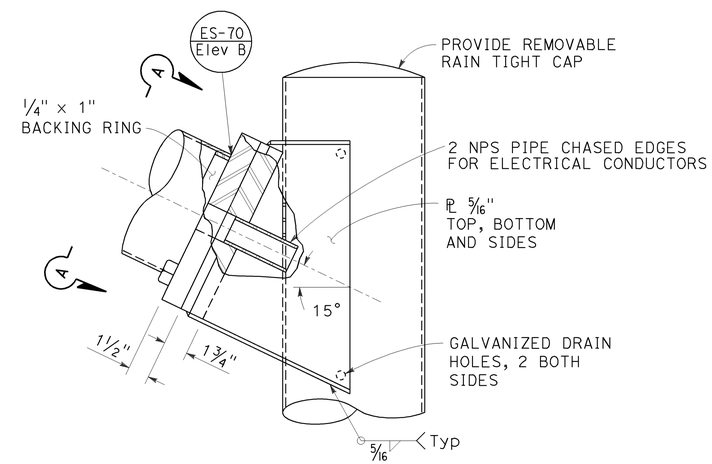

ELEVATION B

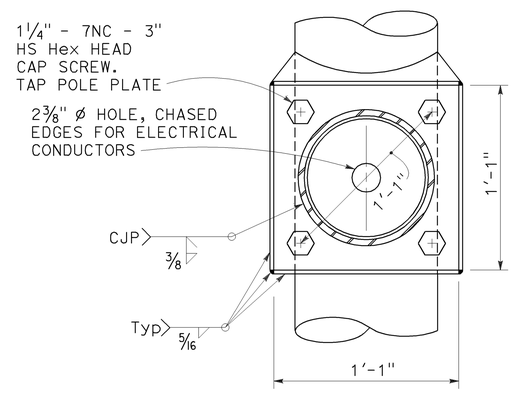

VIEW A-A

FLASHING BEACON MAST ARM CONNECTION DETAIL
DETAIL B

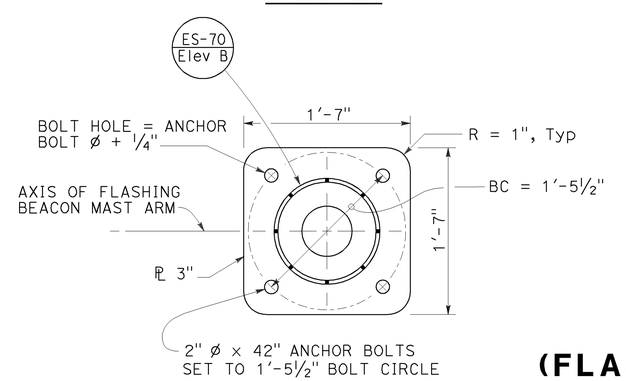

BASE PLATE

DETAIL C

NOTES:

1. See Revised Standard Plan RSP ES-4A and Standard Plan ES-4D for attachment fitting details.
2. For wiring diagram, see Standard Plan ES-14B.
3. For additional notes and details, see Standard Plans ES-7M and ES-7N.
4. Handhole shall be located on the downstream side of traffic.
5. See project plans for type of standard to be installed.

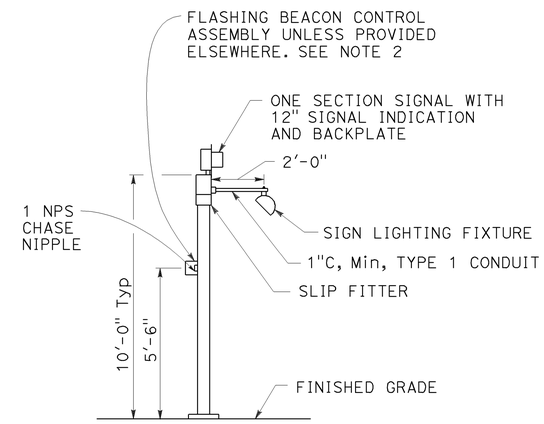

TYPE 1-A, 1-B, 1-C AND 1-D
ADVANCE FLASHING BEACON INSTALLATION
DETAIL D
See Note 5

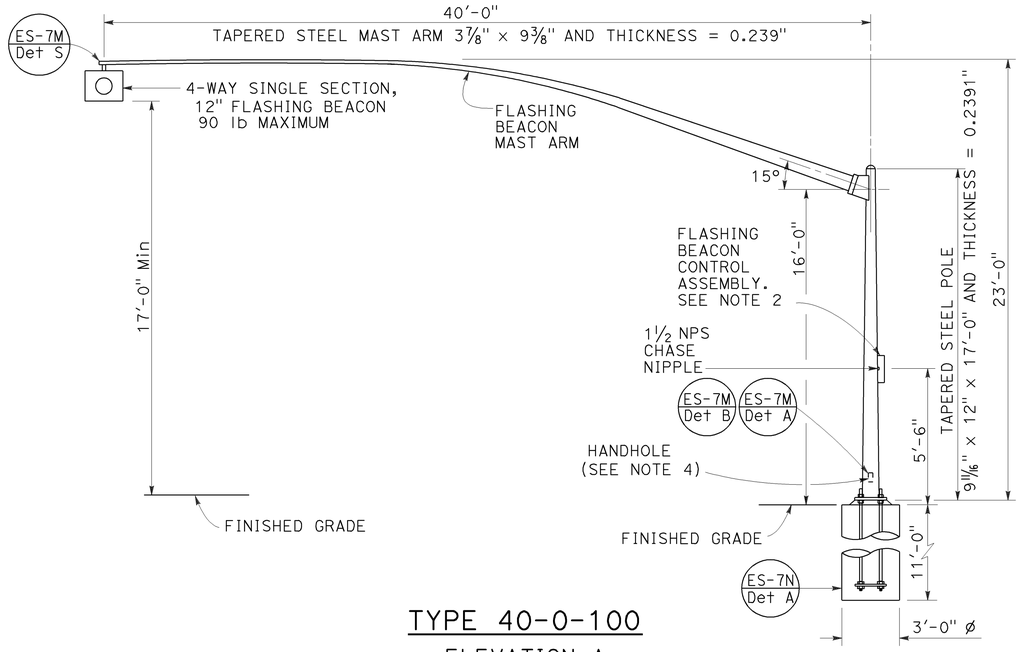

TYPE 40-0-100
ELEVATION A

STATE OF CALIFORNIA
DEPARTMENT OF TRANSPORTATION

ELECTRICAL SYSTEMS (FLASHING BEACON ON A TYPE 1, TYPE 15-FBS AND TYPE 40 STANDARD)

NO SCALE

RSP ES-7J DATED JULY 19, 2013 SUPERSEDES STANDARD PLAN ES-7J DATED MAY 20, 2011 - PAGE 471 OF THE STANDARD PLANS BOOK DATED 2010.

REVISED STANDARD PLAN RSP ES-7J

2010 REVISED STANDARD PLAN RSP ES-7J

6-26-13

DIST	COUNTY	ROUTE	POST MILES TOTAL PROJECT	SHEET NO.	TOTAL SHEETS
03	Sac	160	L7.0	48	61

Theresa Gabriel
REGISTERED ELECTRICAL ENGINEER

July 19, 2013
PLANS APPROVAL DATE

REGISTERED PROFESSIONAL ENGINEER Theresa Aziz Gabriel No. E15129 Exp. 6-30-14 ELECTRICAL STATE OF CALIFORNIA

THE STATE OF CALIFORNIA OR ITS OFFICERS OR AGENTS SHALL NOT BE RESPONSIBLE FOR THE ACCURACY OR COMPLETENESS OF SCANNED COPIES OF THIS PLAN SHEET.

TO ACCOMPANY PLANS DATED 11-17-14

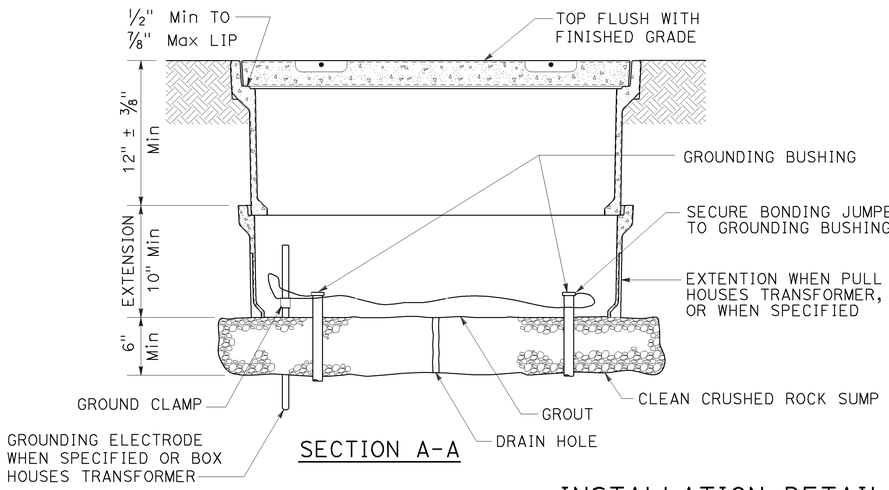

SECTION A-A

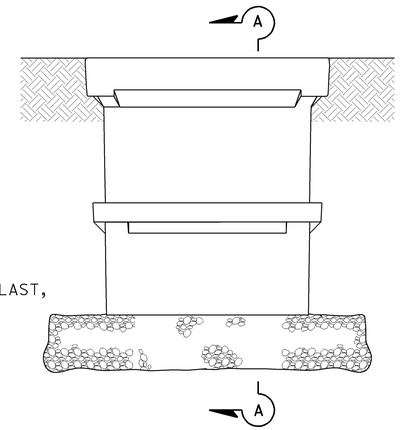

SIDE VIEW

INSTALLATION DETAILS

DETAIL A

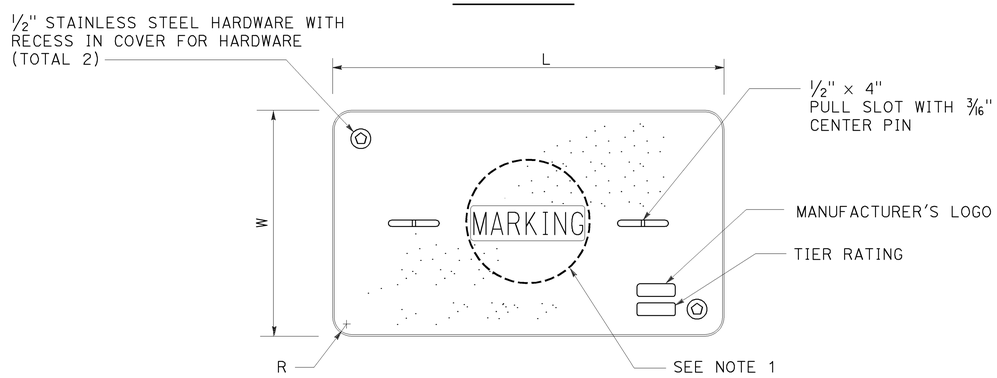

COVER TOP VIEW

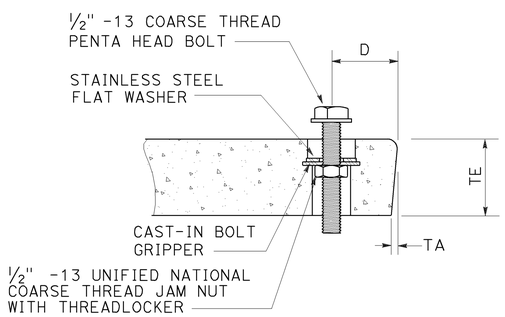

TYPICAL COVER CAPTIVE BOLT

OR SIMILAR

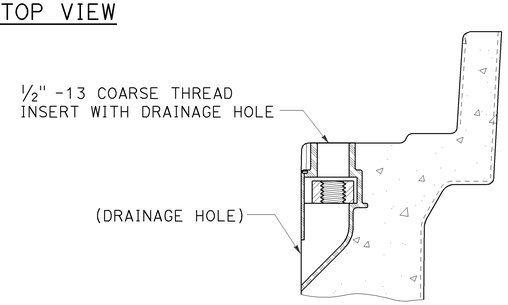

TYPICAL THREADED INSERT

OR SIMILAR

DIMENSION TABLE

PULL BOX	PULL BOX			COVER						
	MINIMUM DEPTH BOX	MINIMUM DEPTH EXTENSION	MAXIMUM WEIGHT	L	W	R	TE	TA	D	MAXIMUM WEIGHT
No. 3½	12"	N/A	40 lb	1′ - 3⅜"	10⅛"	1⅜"	2"	⅛"	1¾"	30 lb
No. 5	12"	10"	55 lb	1′ - 11¼"	1′ - 1¾"	1⅜"	2"	⅛"	1¾"	60 lb
No. 6	12"	10"	70 lb	2′ - 6½"	1′ - 5½"	1⅜"	2"	⅛"	2"	85 lb

NOTES:

1. Pull box covers shall be marked as follows: "SERVICE" Service circuits between service point and service disconnect; "SPRINKLER-CONTROL" sprinkler control circuits, 50 V or less; "CALTRANS" on all pull boxes, except pull boxes marked "SPRINKLER-CONTROL"; and "TELEPHONE" Telephone service;
   - A) No. 3½ pull box.
     - 1) "SIGNAL" - Traffic signal circuits with or without lighting or sign lighting circuits.
     - 2) "LIGHTING" - Lighting or sign lighting circuits where voltage is under 600 V.
   - B) No. 5, 6, 9 or 9A pull box.
     - 1) "TRAFFIC SIGNAL" - Traffic signal circuits with or without lighting or sign lighting circuits.
     - 2) "LIGHTING" - Lighting or sign lighting circuits where voltage is under 600 V.
     - 3) "LIGHTING-HIGH VOLTAGE" - Lighting or sign lighting circuits where voltage is above 600 V.
     - 4) "IRRIGATION" - Circuits to irrigation controller 120 V or more.
     - 5) "RAMP METER" - Ramp meter circuits.
     - 6) "COUNT STATION" - Count or speed monitor circuits.
     - 7) "COMMUNICATIONS" - Communication circuits.
     - 8) "TOS COMMUNICATIONS" - TOS communication line.
     - 9) "TOS POWER" - TOS power.
     - 10) "TDC POWER" - Telephone demarcation cabinet power.
     - 11) "CCTV" - Closed circuit television circuits.
     - 12) "TMS" - Traffic monitoring station circuits.
     - 13) "CMS" - Changeable message sign circuits.
     - 14) "HAR" - Highway advisory radio circuits.
     - 15) "BOOSTER PUMP" - Booster pump circuit.
2. The nominal dimensions of the opening in which the cover sets shall be the same as the cover dimensions except the length and width dimensions shall be ⅛" greater.
3. Covers and boxes shall be interchangeable with California standard male and female gages. When interchanged with a standard male or female gage, the top surfaces shall be flush within ⅛". Top outside radius of covers and pull boxes shall have a ⅛" radius.
4. Pull box extension may be another pull box as long as the bottom edge of the pull box can fit into the cover opening.
5. All dimensions for the cover for non-traffic pull box are nominal values.

STATE OF CALIFORNIA
DEPARTMENT OF TRANSPORTATION

ELECTRICAL SYSTEMS (NON-TRAFFIC PULL BOX)

NO SCALE

RSP ES-8A DATED JULY 19, 2013 SUPERSEDES RSP ES-8A DATED JANUARY 20, 2012 THAT SUPPLEMENTS THE STANDARD PLANS BOOK DATED 2010.

REVISED STANDARD PLAN RSP ES-8A

2010 REVISED STANDARD PLAN RSP ES-8A

7-15-13

Dist	COUNTY	ROUTE	POST MILES TOTAL PROJECT	SHEET No.	TOTAL SHEETS
03	Sac	160	L7.0	49	61

Theresa Gabriel
REGISTERED ELECTRICAL ENGINEER

July 19, 2013
PLANS APPROVAL DATE

REGISTERED PROFESSIONAL ENGINEER
Theresa Aziz Gabriel
No. E15129
Exp. 6-30-14
ELECTRICAL
STATE OF CALIFORNIA

THE STATE OF CALIFORNIA OR ITS OFFICERS OR AGENTS SHALL NOT BE RESPONSIBLE FOR THE ACCURACY OR COMPLETENESS OF SCANNED COPIES OF THIS PLAN SHEET.

TO ACCOMPANY PLANS DATED 11-17-14

ISOFOOTCANDLE CURVE - MINIMUM

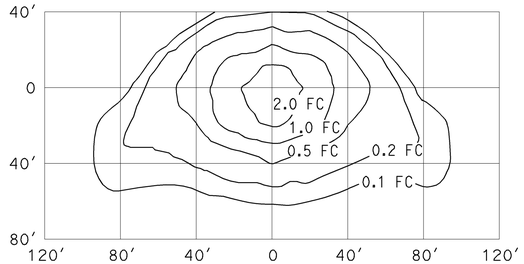

TYPE III MEDIUM CUTOFF

Cutoff Luminaire
34′ Mounting Height
Lamp operated at 22,000 lm
200-W high pressure sodium lamp
ANSI Designation S66

ISOFOOTCANDLE CURVE - MINIMUM

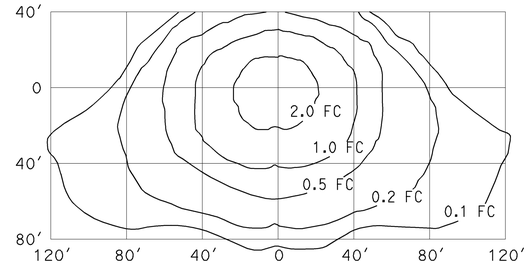

TYPE III MEDIUM CUTOFF

Cutoff Luminaire
40′ Mounting Height
Lamp operated at 37,000 lm
310-W high pressure sodium lamp
ANSI Designation S67

ISOFOOTCANDLE CURVE - MINIMUM

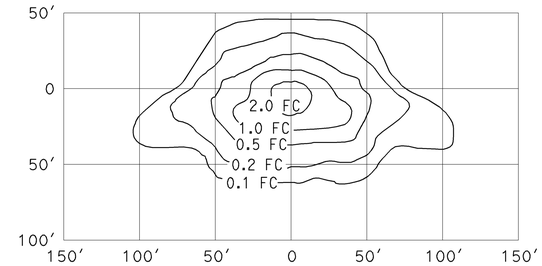

TYPE III MEDIUM CUTOFF

Cutoff Luminaire
30′ Mounting Height
Lamp operated at 16,000 lm
150-W high pressure sodium lamp
ANSI Designation S55

ISOFOOTCANDLE CURVE - MINIMUM

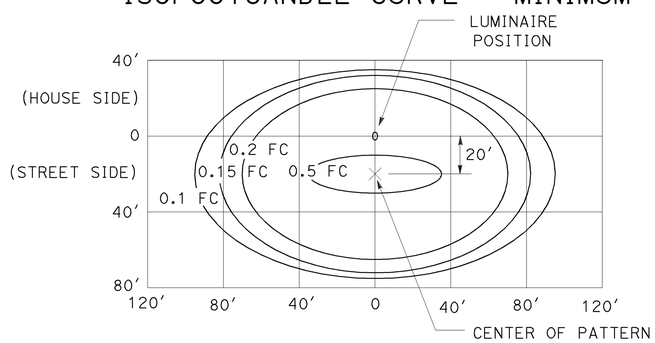

LED LUMINAIRE ROADWAY 1

165-W at 34′ Mounting Height

ISOFOOTCANDLE CURVE - MINIMUM

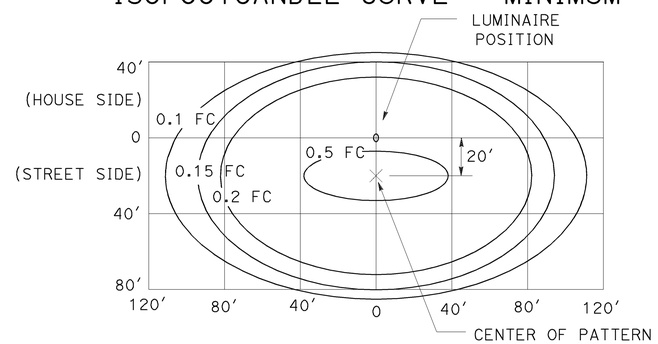

LED LUMINAIRE ROADWAY 2

235-W at 40′ Mounting Height

ISOFOOTCANDLE CURVE - MINIMUM

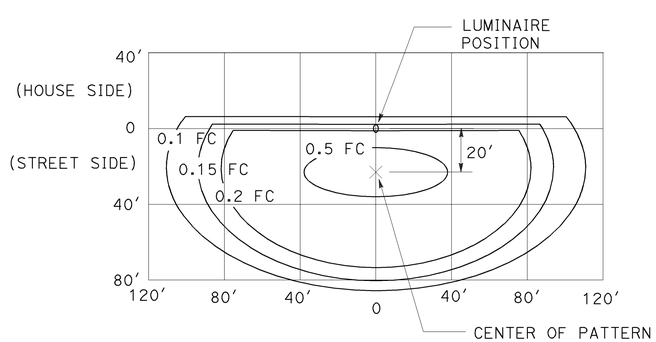

LED LUMINAIRE ROADWAY 3

235-W at 40′ Mounting Height
with back side control

ISOFOOTCANDLE CURVE - MINIMUM

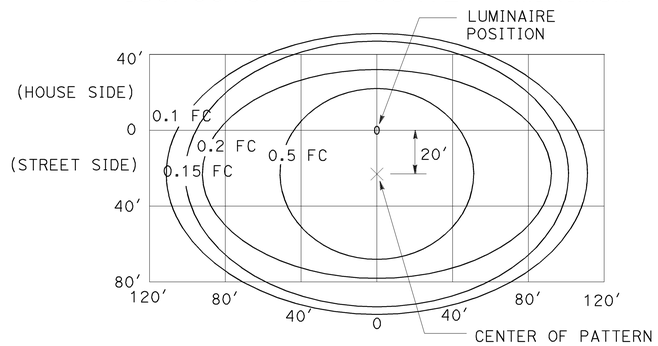

LED LUMINAIRE ROADWAY 4

300-W at 40′ Mounting Height

ISOFOOTCANDLE CURVE - MINIMUM

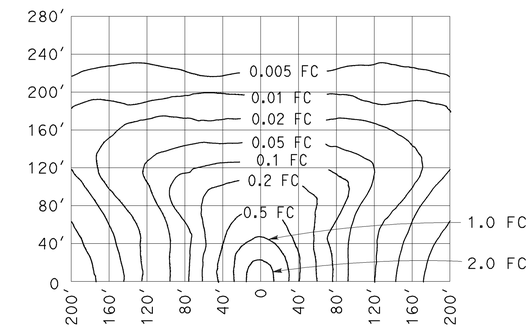

LOW PRESSURE SODIUM LUMINAIRE

40′ Mounting Height
Lamp operated at 33,000 lm
180-W low pressure sodium lamp

STATE OF CALIFORNIA
DEPARTMENT OF TRANSPORTATION

ELECTRICAL SYSTEMS (ISOFOOTCANDLE DIAGRAMS)

NO SCALE

RSP ES-10A DATED JULY 19, 2013 SUPERSEDES RSP ES-10A DATED JULY 20, 2012 THAT SUPPLEMENTS THE STANDARD PLANS BOOK DATED 2010.

REVISED STANDARD PLAN RSP ES-10A

2010 REVISED STANDARD PLAN RSP ES-10A

7-9-13

Dist	COUNTY	ROUTE	POST MILES TOTAL PROJECT	SHEET No.	TOTAL SHEETS
03	Sac	160	L7.0	50	61

REGISTERED ELECTRICAL ENGINEER

July 20, 2012
PLANS APPROVAL DATE

REGISTERED PROFESSIONAL ENGINEER
Jeffery G. McRae
No. E14512
Exp. 6-30-14
ELECTRICAL
STATE OF CALIFORNIA

THE STATE OF CALIFORNIA OR ITS OFFICERS OR AGENTS SHALL NOT BE RESPONSIBLE FOR THE ACCURACY OR COMPLETENESS OF SCANNED COPIES OF THIS PLAN SHEET.

TO ACCOMPANY PLANS DATED 11-17-14

ISOFOOTCANDLE CURVE - MINIMUM

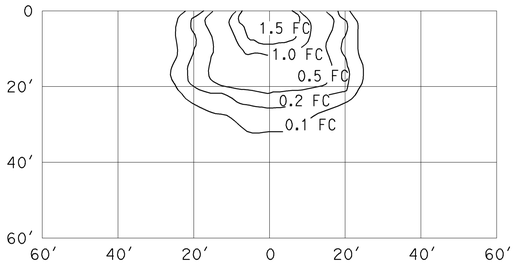

WALL LUMINAIRE
15′ Mounting Height
Lamp operated at 5,800 lm
70-W high pressure sodium lamp
ANSI Designation S62

ISOFOOTCANDLE CURVE - MINIMUM

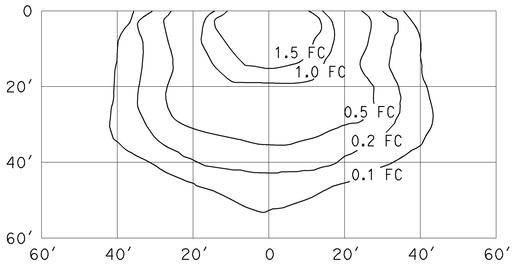

WALL LUMINAIRE
15′ Mounting Height
Lamp operated at 9,500 lm
100-W high pressure sodium lamp
ANSI Designation S54

ISOFOOTCANDLE CURVE - MINIMUM

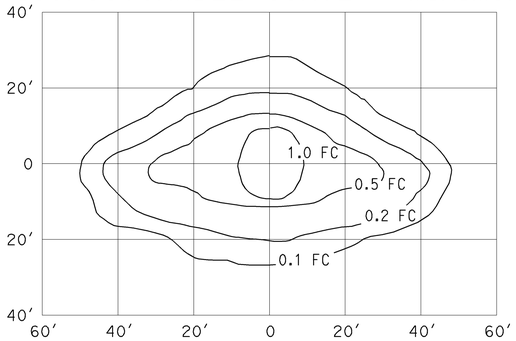

PENDANT SOFFIT LUMINAIRE
TYPE III SHORT
17′ Mounting Height
Lamp operated at 5,800 lm
70-W high pressure sodium lamp
ANSI Designation S62

ISOFOOTCANDLE CURVE - MINIMUM

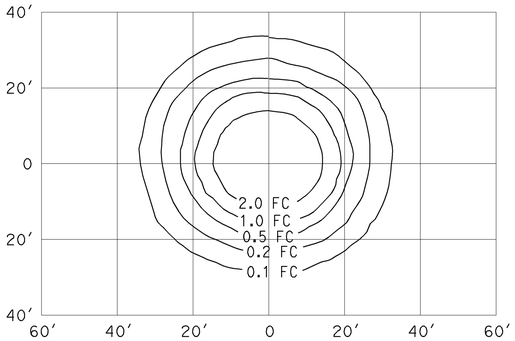

PENDANT SOFFIT LUMINAIRE
17′ Mounting Height
Lamp operated at 5,800 lm
70-W high pressure sodium lamp
ANSI Designation S62

ISOFOOTCANDLE CURVE - MINIMUM

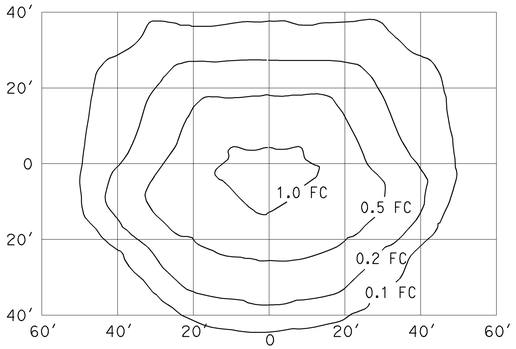

FLUSH SOFFIT LUMINAIRE
17′ Mounting Height
Lamp operated at 5,800 lm
70-W high pressure sodium lamp
ANSI Designation S62

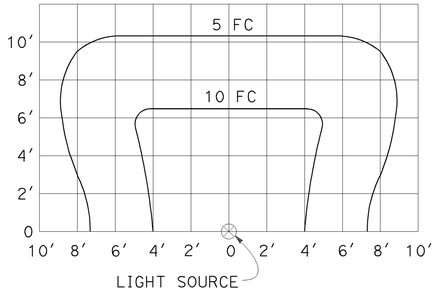

SIGN LIGHTING FIXTURE
ISOFOOTCANDLE DIAGRAM

NOTES:

1. Curves represent the minimum footcandle (FC) of initial illumination on a 10′-0" x 20′-0" panel.
2. The FC shown are with the fixture attached to the light fixture mounting channel which places the center of the source 4′-8" in front of panel and 1′-0" below the bottom edge.
3. Applicable lamp: 85-W fluorescent phosphor coated induction lamp.

STATE OF CALIFORNIA
DEPARTMENT OF TRANSPORTATION

ELECTRICAL SYSTEMS (ISOFOOTCANDLE DIAGRAMS)

NO SCALE

RSP ES-10B DATED JULY 20, 2012 SUPPLEMENTS THE STANDARD PLANS BOOK DATED 2010.

REVISED STANDARD PLAN RSP ES-10B

2010 REVISED STANDARD PLAN RSP ES-10B

DIST	COUNTY	ROUTE	POST MILES TOTAL PROJECT	SHEET No.	TOTAL SHEETS
03	Sac	160	L7.0	51	61

T J Powell 9-24-14
REGISTERED CIVIL ENGINEER DATE

11-17-14
PLANS APPROVAL DATE

REGISTERED PROFESSIONAL ENGINEER TIMOTHY J. POWELL No. C 61037 Exp. 12-31-14 CIVIL STATE OF CALIFORNIA

The State of California or its officers or agents shall not be responsible for the accuracy or completeness of electronic copies of this plan sheet.

THREE MILE SLOUGH BRIDGE NO. 24-0121

QUANTITIES

LEAD COMPLIANCE PLAN	LUMP SUM
WORK AREA MONITORING (BRIDGE)	LUMP SUM
CLEAN AND PAINT STRUCTURAL STEEL (EXISTING BRIDGE)	LUMP SUM
SPOT BLAST CLEAN & PAINT UNDERCOAT (CONTROL HOUSE)	220 SQFT
CLEAN STRUCTURAL STEEL (CONTROL HOUSE)	LUMP SUM
PAINT STRUCTURAL STEEL (CONTROL HOUSE)	LUMP SUM
ADJUST LIFT SPAN BALANCE	LUMP SUM
BUILDING WORK	LUMP SUM

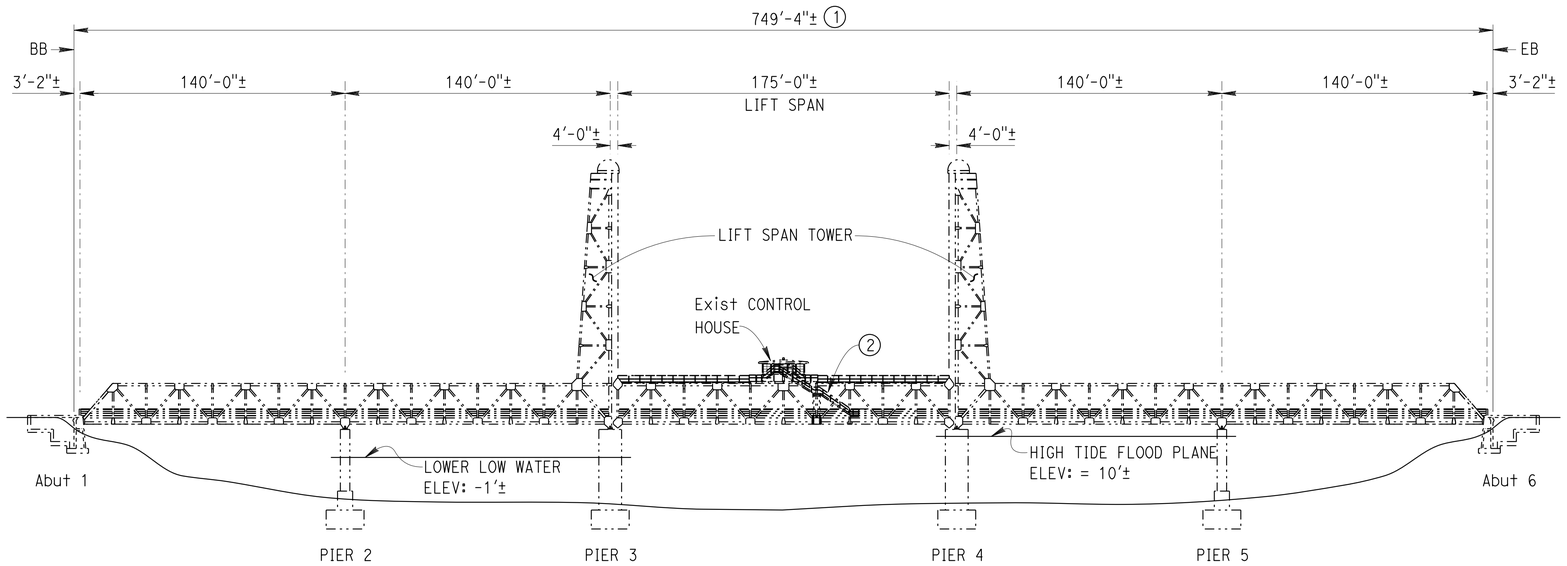

ELEVATION

1" = 40'

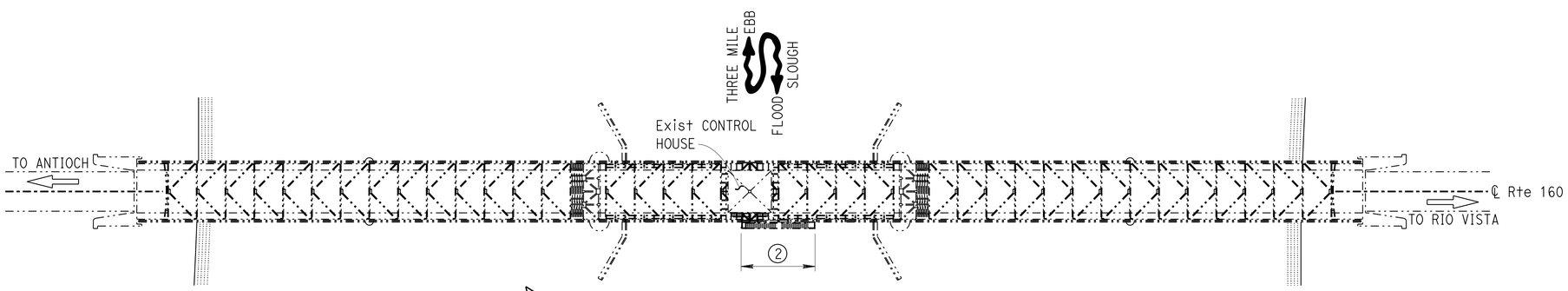

PLAN

1" = 40'

NOTE:
THE CONTRACTOR SHALL VERIFY ALL CONTROLLING FIELD DIMENSIONS BEFORE ORDERING OR FABRICATING ANY MATERIAL.

NOTES:

① Indicates limits of clean and paint undercoats and finish coats to existing steel structure, including walkways, ladders, platforms, landings and control house.

② Existing stairs from sidewalk to control house (east side of bridge) are not to be painted.

③ Existing galvanized steel deck grating is not to be cleaned or painted.

-·-·-·- Indicates existing.

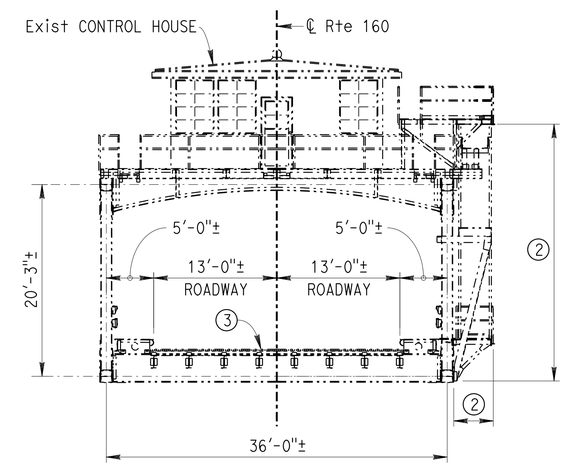

TYPICAL SECTION AT LIFT SPAN

DETAILS SIMILAR AT APPROACH SPANS
1/8" = 1'

STANDARD PLANS DATED 2010

SHEET No.	TITLE
A10A	ABBREVIATIONS (SHEET 1 OF 2)
RSP A10B	ABBREVIATIONS (SHEET 2 OF 2)
A10C	LINES AND SYMBOLS (SHEET 1 OF 3)

Michael J. Lee 9-24-14
DESIGN ENGINEER

	BY	CHECKED				
DESIGN	TIM POWELL	KHANH TRUONG	LOAD FACTOR DESIGN	LIVE LOADING: HS20-44 AND ALTERNATIVE AND PERMIT DESIGN LOAD		
DETAILS	GF BIDWELL	KHANH TRUONG	LAYOUT	BY GF BIDWELL	CHECKED KHANH TRUONG	
QUANTITIES	TIM POWELL	KHANH TRUONG	SPECIFICATIONS	BY KHANH TRUONG	PLANS AND SPECS COMPARED KHANH TRUONG	

STATE OF CALIFORNIA
DEPARTMENT OF TRANSPORTATION

DIVISION OF MAINTENANCE
STRUCTURE MAINTENANCE DESIGN

BRIDGE No. 24-0121
POST MILE L6.98

THREE MILE SLOUGH (PAINT STEEL)

GENERAL PLAN

STRUCTURES MAINTENANCE GENERAL PLAN SHEET (ENGLISH) (REV. 09-01-10)

ORIGINAL SCALE IN INCHES FOR REDUCED PLANS 0 1 2 3

UNIT: 3488
PROJECT NUMBER & PHASE: 0312000219 1
CONTRACT No.: 03-3F3401

DISREGARD PRINTS BEARING EARLIER REVISION DATES
REVISION DATES: 1-31-14 9-23-14 11-6-14

SHEET 1 OF 1

FILE => 03-3f3401_01gp.dgn

USERNAME => s119538 DATE PLOTTED => 22-DEC-2014 TIME PLOTTED => 14:03

Dist	COUNTY	ROUTE	POST MILES TOTAL PROJECT	SHEET No.	TOTAL SHEETS
03	Sac	160	L7.0	52	61

Jagtar Dhaliwal 11-14-14
REGISTERED ELECTRICAL ENGINEER DATE

11-17-14
PLANS APPROVAL DATE

REGISTERED PROFESSIONAL ENGINEER JAGTAR DHALIWAL No. E16915 Exp. 06-30-15 ELEC STATE OF CALIFORNIA

The State of California or its officers or agents shall not be responsible for the accuracy or completeness of scanned copies of this plan sheet.

CALIFORNIA STATE FIRE MARSHAL APPROVED
Approval of this plan does not authorize or approve any omission or deviation from applicable regulations. Final approval is subject to field inspection. One set of approved plans shall be available on the project site at all times.
Reviewed by: SPENCER MEYER
Approval date: 10-30-14
CSFM FILE # 01-34-11-0009

GRAPHIC SYMBOLS FOR ELECTRICAL WIRING AND LAYOUT DIAGRAMS

SYMBOL	DESCRIPTION
(J)	Junction Box

(2) 1/2"C, PVC, 2#12
- CONDUCTOR INFO (PER CONDUIT)
- CONDUIT TYPE
- CONDUIT SIZE
- NUMBER OF CONDUITS (NO NUMBER INDICATES ONE CONDUIT)

GRAPHIC SYMBOLS FOR ELECTRICAL DIAGRAMS

SYMBOL	DESCRIPTION
	CIRCUIT BREAKER, SINGLE-POLE
	CIRCUIT BREAKER, DOUBLE-POLE
	CIRCUIT BREAKER, THREE-POLE
	CONTACT, NORMALLY OPEN
	CONTACT, NORMALLY CLOSED
	LIMIT SWITCH, NORMALLY CLOSED
	LIMIT SWITCH, NORMALLY OPEN
	PUSHBUTTON SWITCH, NORMALLY CLOSED
	PUSHBUTTON SWITCH, NORMALLY OPEN
	SWITCH, SINGLE-POLE, 3-POSITION
	THERMAL OVERLOAD
	FUSE
	RESISTOR
	VARIABLE RESISTOR
	TRANSFORMER WINDING
	GROUNDING ELECTRODE
	ENCLOSURE BOND
(G)	GENERATOR
(M)	MOTOR

STANDARD NOTES

CB Install conduit into existing pull box.

SC Install new to existing conductors.

STANDARD PLANS

Dated 2010

- RSP ES-1A
- RSP ES-1B
- RSP ES-1C
- RSP ES-4A
- RSP ES-4C
- RSP ES-4D
- RSP ES-4E

PROJECT NOTES

1. Separate grounded (Neutral) conductor must be used for each 120-volt circuit.
2. A single insulated equipment grounding conductor, sized as required, must be installed in each conduit run.
3. Not all electrical/mechanical equipment and conduit systems are shown.
4. Location of all existing equipment and conduit systems as shown are approximate only. Contractor shall verify the exact location of all equipment and conduit systems in the field as required prior to the beginning of work. No additional cost will be paid to the Contractor for locating of existing equipment and conduit systems.
5. All conduits on the bridge structure shall be supported to bridge members with proper type beam clamps and construction channels as required. No drilling to the bridge members shall be allowed.
6. Before work on any equipment/devices, contractor shall identify/verify power and then disconnect power to affected equipment/devices.
7. All bridge signal work must be done in compliance with Section 86-4 of Caltrans Standard Specifications 2010.
8. SIC must be in compliance with Section 86-2.08E of Standard Specifications 2010 and installed unspliced between traffic signal controller cabinets.

SCOPE OF WORK

This Project consists of repainting 750' long movable tower bridge and installing temporary traffic signals on both ends of bridge to control the vehicle traffic during construction.

BUILDING DATA	OCCUPANCY	OCCUPANT LOAD	AREA (S.F.)	ALLOWABLE AREA (S.F.)	AREA INCREASE	BUILDING HEIGHT (FEET)	NO. STORIES	HEIGHT INCREASE	TYPE OF CONSTRUCTION	FIRE SPRINKLERED	FIRE ALARM	SMOKE CONTROL	OTHER FIRE PROTECTION SYSTEM
THREE MILE SLOUGH BRIDGE	B/U	6	625	9000	NO	28'-6''	2	NO	V-B	NO	NO	NO	NONE

SYMBOLS

Ø	PHASE

ABBREVIATIONS

A	AMPERES
C	CONDUIT
(E)	EXISTING
Ea	EACH
Flex	FLEXIBLE
G	GROUND
JB	JUNCTION BOX
LF	Liquidtight Flexible Conduit
MC	Metal Conduit
N	NEUTRAL
(N)	NEW
P	POLE (CIRCUIT BREAKER)
PB	PULL BOX or PUSHBUTTON
PVC	POLYVINYL CHLORIDE
SIC	SIGNAL INTERCONNECT CABLE
V	VOLT(S)

LIST OF EQUIPMENT FOR EE-3

010	SERVICE SWITCH ON POLE	262-263	BARRIER LOWER RELAY
011	POWER TRANSFER SWITCH	264-265	BARRIER LOWERED RELAY
012	CONTROL & LIGHTS TRANSFER SWITCH	266	BARRIER LOWERED INTERLOCK RELAY
013	METER SOCKET	267	BARRIER RAISED INTERLOCK RELAY
015	AUXILIARY CONTROL & LIGHTS CIRCUIT BRKR.	270	OVERCURRENT RELAY
020	HOIST MOTOR CIRCUIT BREAKER	280-281	BARRIER MOTOR MAGNETIC BRAKE
021	BRAKE MOTOR CIRCUIT BREAKER	310	LIGHTING & CONTROL AUTO-TRANSFORMER
022	N. ROADWAY GATE MOTOR CIRCUIT BREAKER	320	INSTRUMENT LIGHTS TRANSFORMER
023	S. ROADWAY GATE MOTOR CIRCUIT BREAKER	330	VOLTAGE REGULATOR POTENTIAL TRANSFORMER
024	COMPRESSOR MOTOR CIRCUIT BREAKER	331	VOLTAGE REGULATOR STABILIZER
025	LUBRICATOR MOTORS CIRCUIT BREAKER	332	VOLTAGE REGULATOR
026	HEATER CIRCUIT BREAKER	340-341	CURRENT TRANSFORMER
027-028	LUBRICATOR MOTOR PUSHBUTTON	345-346	TOWER LIGHT TRANSFORMER
029	BARRIER MOTORS CIRCUIT BREAKER	351	INDICATING VOLTMETER
030	MASTER CONTROL SWITCH	360	INDICATING WATTMETER
031-034	GATE CONTROL PUSHBUTTON	370	BATTERY CHARGER
035-036	BARRIER CONTROL SWITCH	400	EMERGENCY GENERATOR
037	HOIST CONTROLLER	401	ENGINE STARTER BATTERY
038	CONTROLLER END TRAVEL PUSHBUTTON	402	WATER JACKET HEATER
039	HOIST MOTOR JOG PUSHBUTTON	410	HOIST MOTOR
040-041	TOWER LIGHT TUMBLER	420	HOIST BRAKE MOTOR
043	VOLTMETER SWITCH	450-453	GATE MOTOR
045-046	LUBRICATOR MOTOR MANUEL STARTER	454-455	BARRIER MOTOR
050	VOLTAGE REGULATOR BYPASS SWITCH	460	WHISTLE COMP. MOTOR, ST., & PRES. SWITCH
051	TRAFFIC SIGNALS CIRCUIT BREAKER	470-471	LUBRICATOR MOTOR
052	GATES BYPASS SWITCH	520	INSTRUMENT FUSES
053	HOIST BYPASS SWITCH	540	GATE LIGHT FUSE
056	BARRIERS BYPASS SWITCH	541	BARRIER LIGHT FUSE
057	BARRIER LIGHTS CIRCUIT BREAKER	550	REGULATOR TRANSFORMER FUSES
060	LIGHTS PANEL	610-613	GATE TRAFFIC ALARM BELL
070	SWITCHBOARD LIGHT TUMBLER	614-615	ADVANCE TRAFFIC ALARM BELL
071	HOUSE LIGHTS TUMBLER	620	PHASE FAILURE ALARM BELL
074	ALARM BELL TUMBLER	630	NORTHSIDE TRAFFIC SIGNAL, 3 COLOR
075	HOUSE & STAIR LIGHTS SWITCH	631	SOUTHSIDE TRAFFIC SIGNAL, 3 COLOR
100-103	GATE LIMIT SWITCH	632-633	TRAFFIC SIGNAL, 1 COLOR
104-105	BARRIER LIMIT SWITCH	640	TRAFFIC SIGNAL REPEATER
130	HOIST LIMIT SWITCH	650	INDICATING LIGHTS IN CONTROL DESK
150	TRAFFIC SIGNAL TIMER	660	GATE WARNING LIGHT
151	LUBRICATOR MOTORS TIMER	661	BARRIER LIGHT
152	TRAFFIC SIGNALS FLASHER SWITCH	670-671	TOWER TOP LIGHT
200	HOIST MOTOR STARTER	672-673	TOWER TOP CONVENIENCE OUTLET
201	BRAKE MOTOR STARTER	680	SWITCHBOARD LIGHTS
205	EMERGENCY GENERATOR BREAKER	681	HOUSE LIGHTS
210-213	GATE MOTOR STARTER	682	STAIR LIGHT
215	LUBRICATOR MOTOR STARTER	683	ROADWAY LIGHTS
220-221	BARRIER MOTOR STARTER	684	PLUG OUTLET
230-233	GATE LOWER RELAY	685	CLOCK OUTLET & CLOCK
234-237	GATE RAISE RELAY	686	WEATHERPROOF PLUG OUTLET
239	TRAFFIC SIGNALS MAGNETIC SWITCH	687	SIGN LIGHT
240	CONTROLLER RESET RELAY	690	SPAN NAVIGATION LIGHTS
241-244	GATE LOWERED RELAY	691	FENDER NAVIGATION LIGHTS
245	BRIDGE SEATED LIMIT SWITCH	699	EMERGENCY LIGHT
246	BRIDGE SEATED INTERLOCK RELAY	710	EXCITER RHEOSTAT
247	GATE DOWN INTERLOCK RELAY	720	INDICATING LIGHTS RHEOSTAT
248	ROADWAY LIGHTS RELAY	730	HOIST MOTOR ROTOR RESISTANCE
249	ROADWAY LIGHTS MAGNETIC SWITCH	750	AIR COMPRESSOR DISCONNECT SWITCH
250	PHASE FAILURE RELAY	751	STAIR LIGHT THREE-WAY SWITCH
251	PHASE FAILURE ALARM RELAY	752	STAIR LIGHT THREE-WAY SWITCH
252	WATER PUMP	753	FOOT OPERATED BRAKE SWITCH
253	WATER PUMP MOTOR DISCONNECT	760	GATE INTERLOCK RELAY
254	WATER PUMP CIRCUIT BREAKER	761	RED/GREEN SIGNAL RELAY
260-261	BARRIER RAISE RELAY	762	GREEN SIGNAL RELAY

	BY	CHECKED
DESIGN	Jagtar Dhaliwal	Tommy Lee
DETAILS	Ed D. Tapalla	Jagtar Dhaliwal
QUANTITIES	Jagtar Dhaliwal	Tommy Lee

STATE OF CALIFORNIA
DEPARTMENT OF TRANSPORTATION

DIVISION OF ENGINEERING SERVICES
ELECTRICAL-MECHANICAL-WATER AND WASTEWATER DESIGN

BRIDGE No. 24-0121
POST MILE L6.98

THREE MILE SLOUGH BRIDGE PAINT JOB

LEGEND, NOTES, ABBREVIATIONS AND BUILDING DATA

SHEET EE-1

ORIGINAL SCALE IN INCHES FOR REDUCED PLANS 0 1 2 3

UNIT: 3618 CONTRACT No.: 3F3401
PROJECT NUMBER & PHASE: 03120002191

DISREGARD PRINTS BEARING EARLIER REVISION DATES → 5-12-14 6-06-14 6-25-14 9-19-14 11-14-14

REVISION DATES (PRELIMINARY STAGE ONLY) SHEET OF

TAEMWW Imperial - CCSC Rev. 02/13

22-DEC-2014 14:03

P:\proj5\03\3f340\drafting\ee_01.dgn

Dist	COUNTY	ROUTE	POST MILES TOTAL PROJECT	SHEET No.	TOTAL SHEETS
03	Sac	160	L7.0	53	61

REGISTERED ELECTRICAL ENGINEER — DATE 11-14-14

PLANS APPROVAL DATE 11-17-14

The State of California or its officers or agents shall not be responsible for the accuracy or completeness of scanned copies of this plan sheet.

REGISTERED PROFESSIONAL ENGINEER — JAGTAR DHALIWAL — No. E16915 — Exp. 06-30-15 — ELEC — STATE OF CALIFORNIA

NOTES:

1. Install a weather proof junction box, hooks, and strain relief devices to secure and support the cables.
2. Secure the cables every 10′ to the stationary members of the tower and bottom chord of bridge between each tower and end of the bridge.
3. The cables must have adequate slack to accomodate the span movement and they must be secured properly at the top hanging point on the towers and on the lift span.
4. For continuation of conduit and cables, see Temporary Signal System Plan E-2.
5. For continuation of conduit and cables, see Temporary Signal System Plan E-3.
6. Install a control relay inside the existing junction box for temporary signal pre-emption, see sheet EE-4 for schematics and EE-6 for wiring diagram.
7. Install 5#8 Type SOOW cable and 1 SIC to existing junction box with a watertight connector, see sheet EE-6 for wiring diagram.
8. Install 5#8 Type SOOW cable and 1 SIC to existing junction box with a watertight connector, see sheet EE-8 for wiring diagram.
9. ¾" C, replace existing 10#12 conductors with new 9#12 conductors and number the conductors as shown on Sheet EE-4.
10. Remove existing Traffic Signal Indication Lights enclosure and install a new enclosure, for schematics see Sheet EE-4.
11. For details of modifications in the control house, see Sheets EE-3 and EE-4.

CALIFORNIA STATE FIRE MARSHAL APPROVED
Approval of this plan does not authorize or approve any omission or deviation from applicable regulations. Final approval is subject to field inspection. One set of approved plans shall be available on the project site at all times.
Reviewed by: SPENCER MEYER
Approval date: 10-30-14
CSFM FILE # 01-34-11-0009

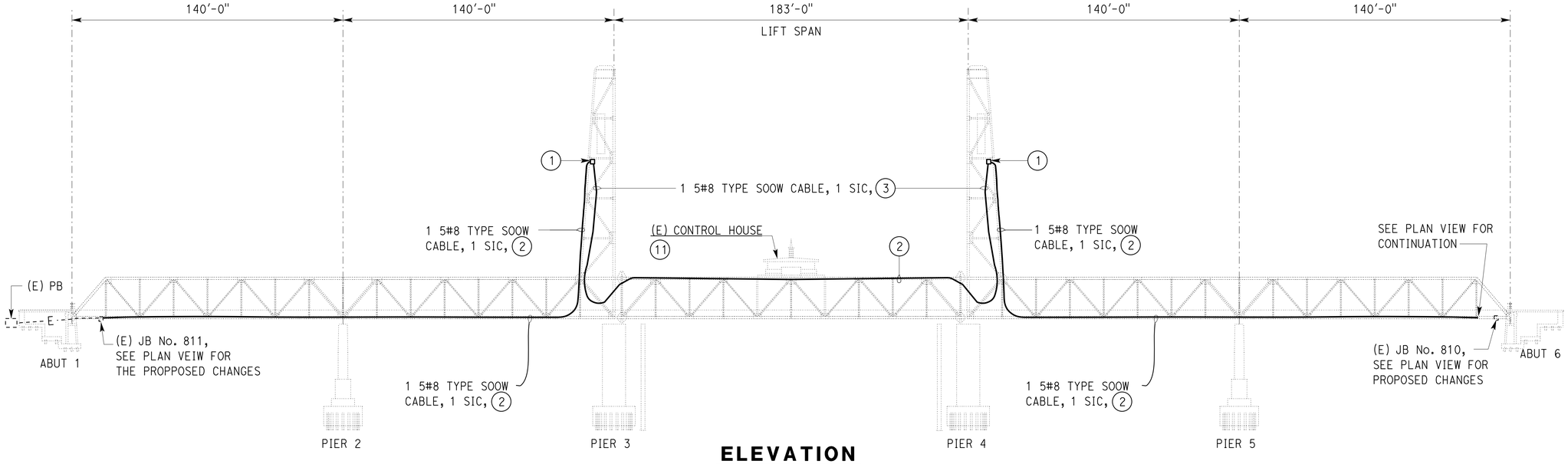

ELEVATION

1" = 30′

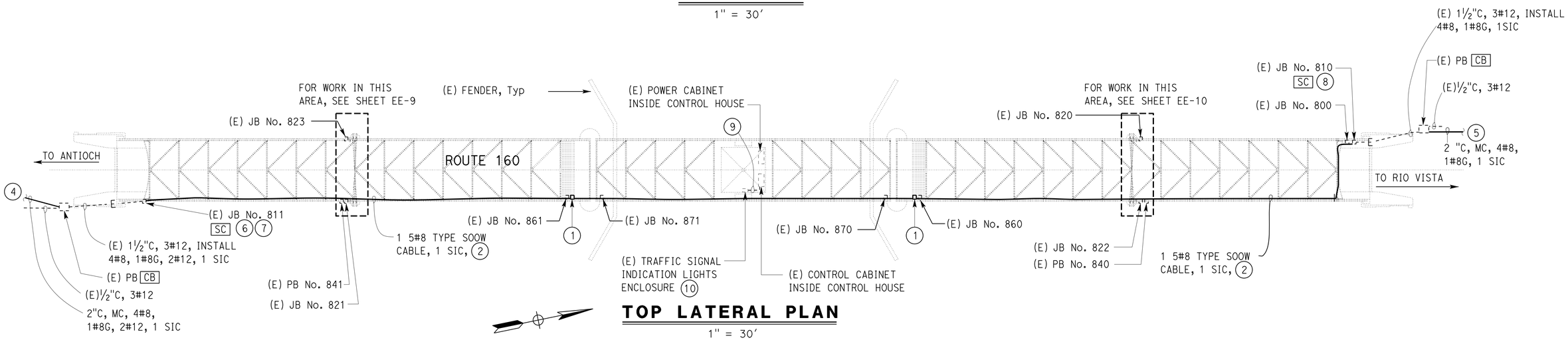

TOP LATERAL PLAN

1" = 30′

GENERAL NOTE:
For existing conduits and conductors not shown, see sheet EE-5 and EE-7.

THIS DRAWING ACCURATE FOR ELECTRICAL WORK ONLY

DESIGN SUPERVISOR	DESIGN	BY Jagtar Dhaliwal	CHECKED Tommy Lee
DESIGN ENGINEER	DETAILS	BY Ed D. Tapalla	CHECKED Jagtar Dhaliwal
	QUANTITIES	BY Jagtar Dhaliwal	CHECKED Tommy Lee

STATE OF CALIFORNIA
DEPARTMENT OF TRANSPORTATION

DIVISION OF ENGINEERING SERVICES
ELECTRICAL-MECHANICAL-WATER AND WASTEWATER DESIGN

BRIDGE No. 24-0121
POST MILE L6.98

THREE MILE SLOUGH BRIDGE PAINT JOB

SITE PLAN

SHEET EE-2

TAEMWW Imperial - CCSC Rev. 02/13

ORIGINAL SCALE IN INCHES FOR REDUCED PLANS 0 1 2 3

UNIT: 3618 CONTRACT No.: 3F3401
PROJECT NUMBER & PHASE: 03120002191

DISREGARD PRINTS BEARING EARLIER REVISION DATES → 5-14-14 6-06-14 6-24-14 8-14-14 9-18-14 11-14-14

REVISION DATES (PRELIMINARY STAGE ONLY) SHEET OF

22-DEC-2014 14:03

P:\proj5\03\3f340\drafting\ee_02.dgn

Dist	COUNTY	ROUTE	POST MILES TOTAL PROJECT	SHEET No.	TOTAL SHEETS
03	Sac	160	L7.0	54	61

Jagtar Dhaliwal 11-14-14
REGISTERED ELECTRICAL ENGINEER DATE

11-17-14
PLANS APPROVAL DATE

REGISTERED PROFESSIONAL ENGINEER JAGTAR DHALIWAL No. E16915 Exp. 06-30-15 ELEC STATE OF CALIFORNIA

The State of California or its officers or agents shall not be responsible for the accuracy or completeness of scanned copies of this plan sheet.

CALIFORNIA STATE FIRE MARSHAL APPROVED

Approval of this plan does not authorize or approve any omission or deviation from applicable regulations. Final approval is subject to field inspection. One set of approved plans shall be available on the project site at all times.

Reviewed by: SPENCER MEYER
Approval date: 10-30-14

CSFM FILE # 01-34-11-0009

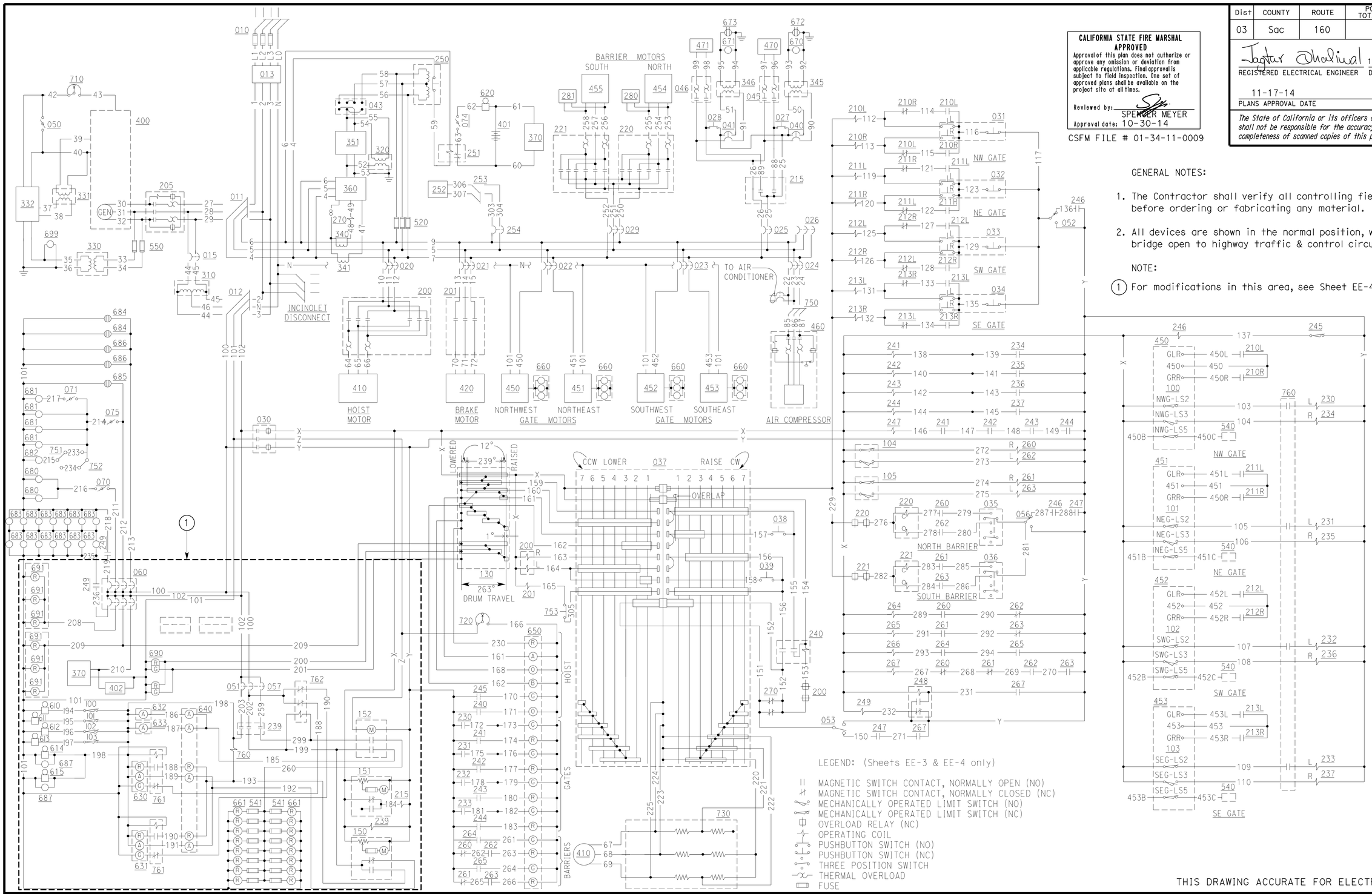

GENERAL NOTES:

1. The Contractor shall verify all controlling field dimensions before ordering or fabricating any material.
2. All devices are shown in the normal position, which is for the bridge open to highway traffic & control circuits de-energized.

NOTE:

(1) For modifications in this area, see Sheet EE-4.

LEGEND: (Sheets EE-3 & EE-4 only)

- MAGNETIC SWITCH CONTACT, NORMALLY OPEN (NO)
- MAGNETIC SWITCH CONTACT, NORMALLY CLOSED (NC)
- MECHANICALLY OPERATED LIMIT SWITCH (NO)
- MECHANICALLY OPERATED LIMIT SWITCH (NC)
- OVERLOAD RELAY (NC)
- OPERATING COIL
- PUSHBUTTON SWITCH (NO)
- PUSHBUTTON SWITCH (NC)
- THREE POSITION SWITCH
- THERMAL OVERLOAD
- FUSE

THIS DRAWING ACCURATE FOR ELECTRICAL WORK ONLY

	BY	CHECKED
DESIGN	Jagtar Dhaliwal	Tommy Lee
DETAILS	Ed D. Tapalla	Jagtar Dhaliwal
QUANTITIES	Jagtar Dhaliwal	Tommy Lee

STATE OF CALIFORNIA
DEPARTMENT OF TRANSPORTATION

DIVISION OF ENGINEERING SERVICES
ELECTRICAL-MECHANICAL-WATER AND WASTEWATER DESIGN

BRIDGE No. 24-0121
POST MILE L6.98

THREE MILE SLOUGH BRIDGE PAINT JOB

EXISTING POWER AND CONTROL SCHEMATIC DIAGRAM

SHEET EE-3

TAEMWW Imperial - CCSC Rev. 02/13

ORIGINAL SCALE IN INCHES FOR REDUCED PLANS 0 1 2 3

UNIT: 3618 CONTRACT No.: 3F3401
PROJECT NUMBER & PHASE: 03120002191

DISREGARD PRINTS BEARING EARLIER REVISION DATES → 5-13-14 6-06-14 6-24-14 8-11-14 8-29-14 11-14-14

REVISION DATES (PRELIMINARY STAGE ONLY) SHEET OF

22-DEC-2014 14:03

P:\proj5\03\3f340\drafting\ee_03.dgn

NOTES:

1. Install a 120 V control relay inside existing Junction Box No. 811 located near the south end of bridge for the temporary signal pre-emption.
2. Disconnect conductor from conductor #198 and splice to conductor #101.
3. Remove Traffic Signal Indication Lights enclosure (Equipment #640).
4. Splice conductors #186 and #187 (from equipment # 632 and #633) to conductor #185 (from Equipment #152), rename conductors #186 and #187 to conductor #185.
5. Use conductors #188 and #190 for Green signal heads only. Splice existing spare conductor #185 to conductor #193, rename spare conductor to conductor #193.
6. Splice conductors #189 and #191 (from Equipment # 630 and #631) to conductor #192 (from Equipment # 150), rename conductors #189 and #191 to conductor #192.
7. Install a new Traffic Signals Indication Lights enclosure (Equipment #640) inside (E) Control House with current sensing relays and LED pilot lights.
8. Replace existing 12" traffic signal faces inside housing with LED type traffic faces and provide hardware to suit the fixture.
9. Remove existing Red/Green Signal Control Relay (761) from existing junction box No. 821. Reconnect and re-number signal conductors as shown on this sheet.
10. Remove existing Red/Green Signal Control Relay (761) from existing junction box No. 820. Reconnect and re-number signal conductors as shown on this sheet.
11. Install new 3-Section Trafiic Signal Head, 12" LED Traffic Signal Lights and hardware for southwest traffic signal.

GENERAL NOTES:

1. For identification of equipment numbers, see "List of Equipment" on sheet EE-1.
2. Bold items are new electrical equipment.

CALIFORNIA STATE FIRE MARSHAL APPROVED

Approval of this plan does not authorize or approve any omission or deviation from applicable regulations. Final approval is subject to field inspection. One set of approved plans shall be available on the project site at all times.

Reviewed by: SPENCER MEYER

Approval date: 10-30-14

CSFM FILE # 01-34-11-0009

Dist	COUNTY	ROUTE	POST MILES TOTAL PROJECT	SHEET No.	TOTAL SHEETS
03	Sac	160	L7.0	55	61

Jagtar Dhaliwal 11-14-14

REGISTERED ELECTRICAL ENGINEER DATE

11-17-14

PLANS APPROVAL DATE

REGISTERED PROFESSIONAL ENGINEER JAGTAR DHALIWAL No. E16915 Exp. 06-30-15 ELEC STATE OF CALIFORNIA

The State of California or its officers or agents shall not be responsible for the accuracy or completeness of scanned copies of this plan sheet.

2#12 for temporary signal pre-emption, for continuation, see sheet EE-6

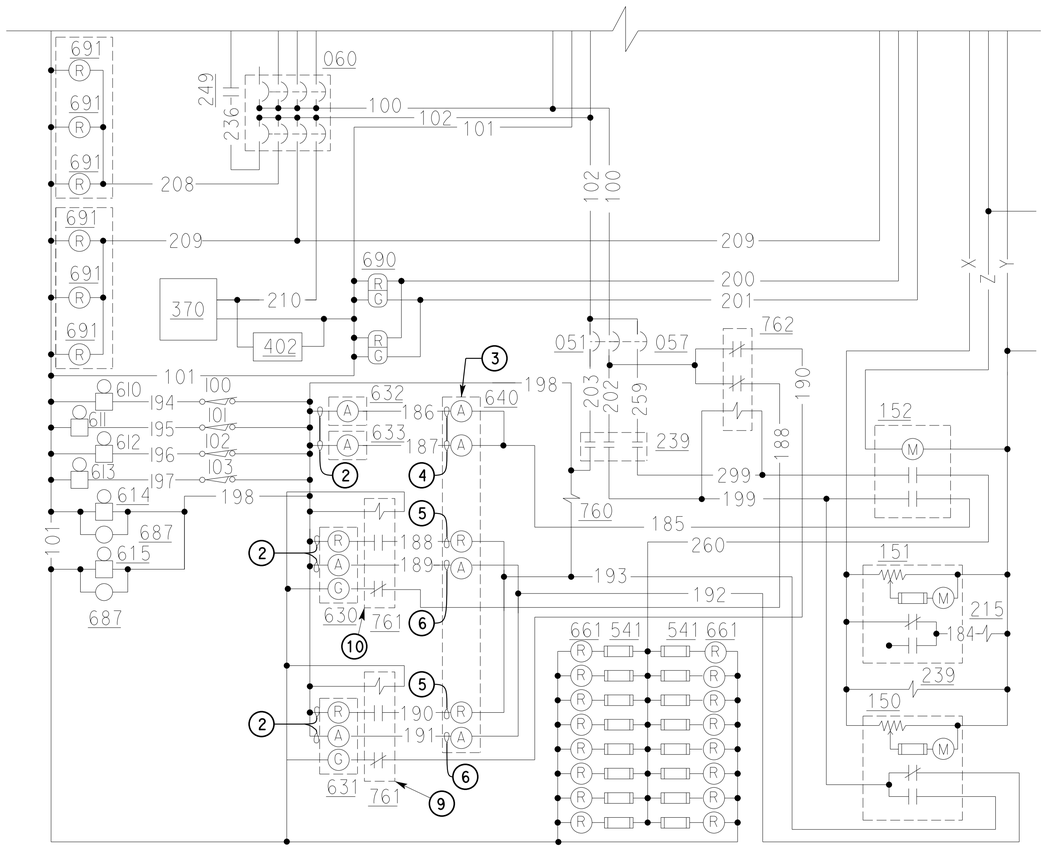

EXISTING

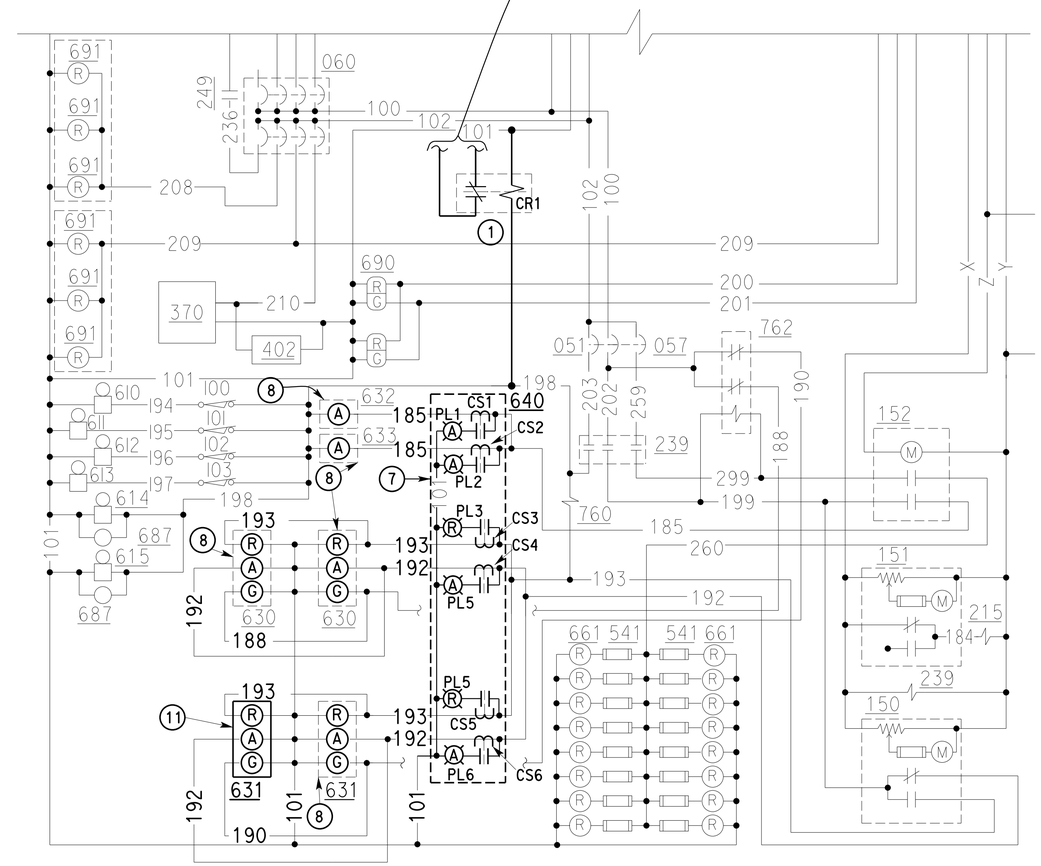

MODIFIED

THIS DRAWING ACCURATE FOR ELECTRICAL WORK ONLY

	BY	CHECKED
DESIGN	Jagtar Dhaliwal	Tommy Lee
DETAILS	Ed D. Tapalla	Jagtar Dhaliwal
QUANTITIES	Jagtar Dhaliwal	Tommy Lee

STATE OF CALIFORNIA DEPARTMENT OF TRANSPORTATION

DIVISION OF ENGINEERING SERVICES ELECTRICAL-MECHANICAL-WATER AND WASTEWATER DESIGN

BRIDGE No. 24-0121 POST MILE L6.98

THREE MILE SLOUGH BRIDGE PAINT JOB

POWER AND CONTROL SCHEMATIC DIAGRAM

SHEET EE-4

TAEMWW Imperial - CCSC Rev. 02/13

ORIGINAL SCALE IN INCHES FOR REDUCED PLANS 0 1 2 3

UNIT: 3618 CONTRACT No.: 3F3401

PROJECT NUMBER & PHASE: 03120002191

DISREGARD PRINTS BEARING EARLIER REVISION DATES

REVISION DATES (PRELIMINARY STAGE ONLY) 5-13-14 6-18-14 6-24-14 7-31-14 8-29-14 11-14-14

SHEET OF

22-DEC-2014 14:03

P:\proj5\03\3f340\drafting\ee_04.dgn

GENERAL NOTE:

1. For identification of equipment numbers, see "List of Equipment" on sheet EE-1.

Dist	COUNTY	ROUTE	POST MILES TOTAL PROJECT	SHEET No.	TOTAL SHEETS
03	Sac	160	L7.0	56	61

Jagtar Dhaliwal 11-14-14
REGISTERED ELECTRICAL ENGINEER DATE

11-17-14
PLANS APPROVAL DATE

REGISTERED PROFESSIONAL ENGINEER JAGTAR DHALIWAL No. E16915 Exp. 06-30-15 ELEC STATE OF CALIFORNIA

The State of California or its officers or agents shall not be responsible for the accuracy or completeness of scanned copies of this plan sheet.

CALIFORNIA STATE FIRE MARSHAL APPROVED

Approval of this plan does not authorize or approve any omission or deviation from applicable regulations. Final approval is subject to field inspection. One set of approved plans shall be available on the project site at all times.

Reviewed by: SPENCER MEYER

Approval date: 10-30-14

CSFM FILE # 01-34-11-0009

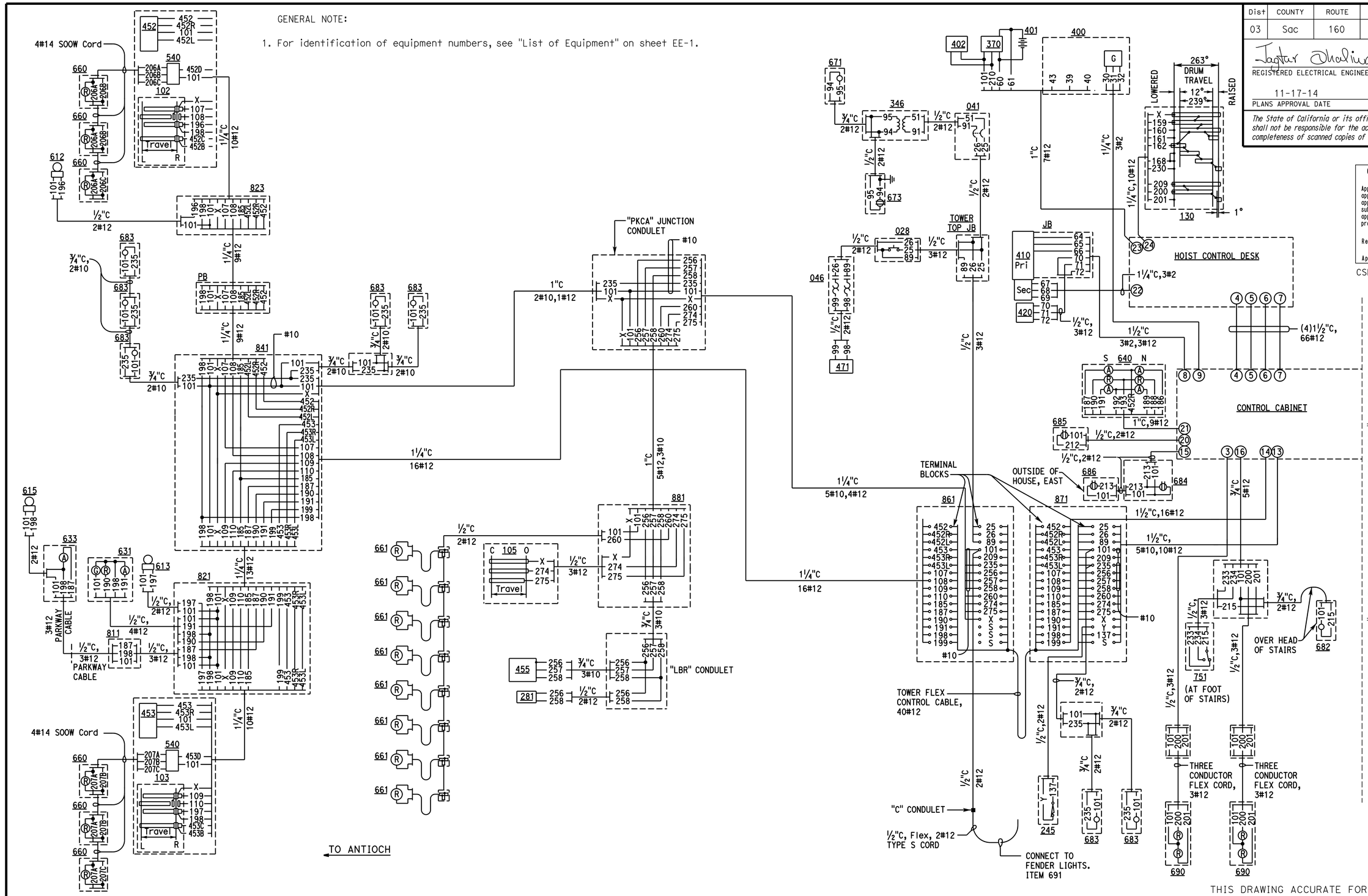

THIS DRAWING ACCURATE FOR ELECTRICAL WORK ONLY

	BY	CHECKED
DESIGN	Jagtar Dhaliwal	Tommy Lee
DETAILS	Ed D. Tapala	Jagtar Dhaliwal
QUANTITIES	Jagtar Dhaliwal	Tommy Lee

STATE OF CALIFORNIA
DEPARTMENT OF TRANSPORTATION

DIVISION OF ENGINEERING SERVICES
ELECTRICAL-MECHANICAL-WATER AND WASTEWATER DESIGN

BRIDGE No. 24-0121
POST MILE L6.98

THREE MILE SLOUGH BRIDGE PAINT JOB

EXISTING WIRING DIAGRAM - SOUTHSIDE

SHEET EE-5

TAEMWW Imperial - CCSC Rev. 02/13

ORIGINAL SCALE IN INCHES FOR REDUCED PLANS 0 1 2 3

UNIT: 3618 CONTRACT No.: 3F3401
PROJECT NUMBER & PHASE: 03120002191

DISREGARD PRINTS BEARING EARLIER REVISION DATES → 8-14-14 8-29-14 11-14-14

REVISION DATES (PRELIMINARY STAGE ONLY) SHEET OF

22-DEC-2014 14:03

P:\proj5\03\3f340\drafting\ee_05.dgn

Dist	COUNTY	ROUTE	POST MILES TOTAL PROJECT	SHEET No.	TOTAL SHEETS
03	Sac	160	L7.0	57	61

Jagtar Dhaliwal 11-14-14
REGISTERED ELECTRICAL ENGINEER DATE

11-17-14
PLANS APPROVAL DATE

REGISTERED PROFESSIONAL ENGINEER JAGTAR DHALIWAL No. E16915 Exp. 06-30-15 ELEC STATE OF CALIFORNIA

The State of California or its officers or agents shall not be responsible for the accuracy or completeness of scanned copies of this plan sheet.

CALIFORNIA STATE FIRE MARSHAL APPROVED
Approval of this plan does not authorize or approve any omission or deviation from applicable regulations. Final approval is subject to field inspection. One set of approved plans shall be available on the project site at all times.
Reviewed by: SPENCER MEYER
Approval date: 10-30-14

CSFM FILE # 01-34-11-0009

GENERAL NOTES:

1. For identification of equipment numbers, see "List of Equipment" on sheet EE-1.
2. Bold items are new electrical equipment.
3. Relabel conductors as shown in bold.

Notes:

(1) Install control relay inside existing Junction Box No. 811, for connections see schematics on sheet EE-4. Splice 5#8 Type SOOW Cable conductors to 4#8 and 1#8G conductors inside the junction box.

(2) 2"C, MC, 4#8, 1#8G, 2#12, 1 SIC for temporary signals, see sheet E-2 for continuation.

(3) 1 5#8 Type SOOW Cable, 1 SIC, for continuity see sheet EE-2

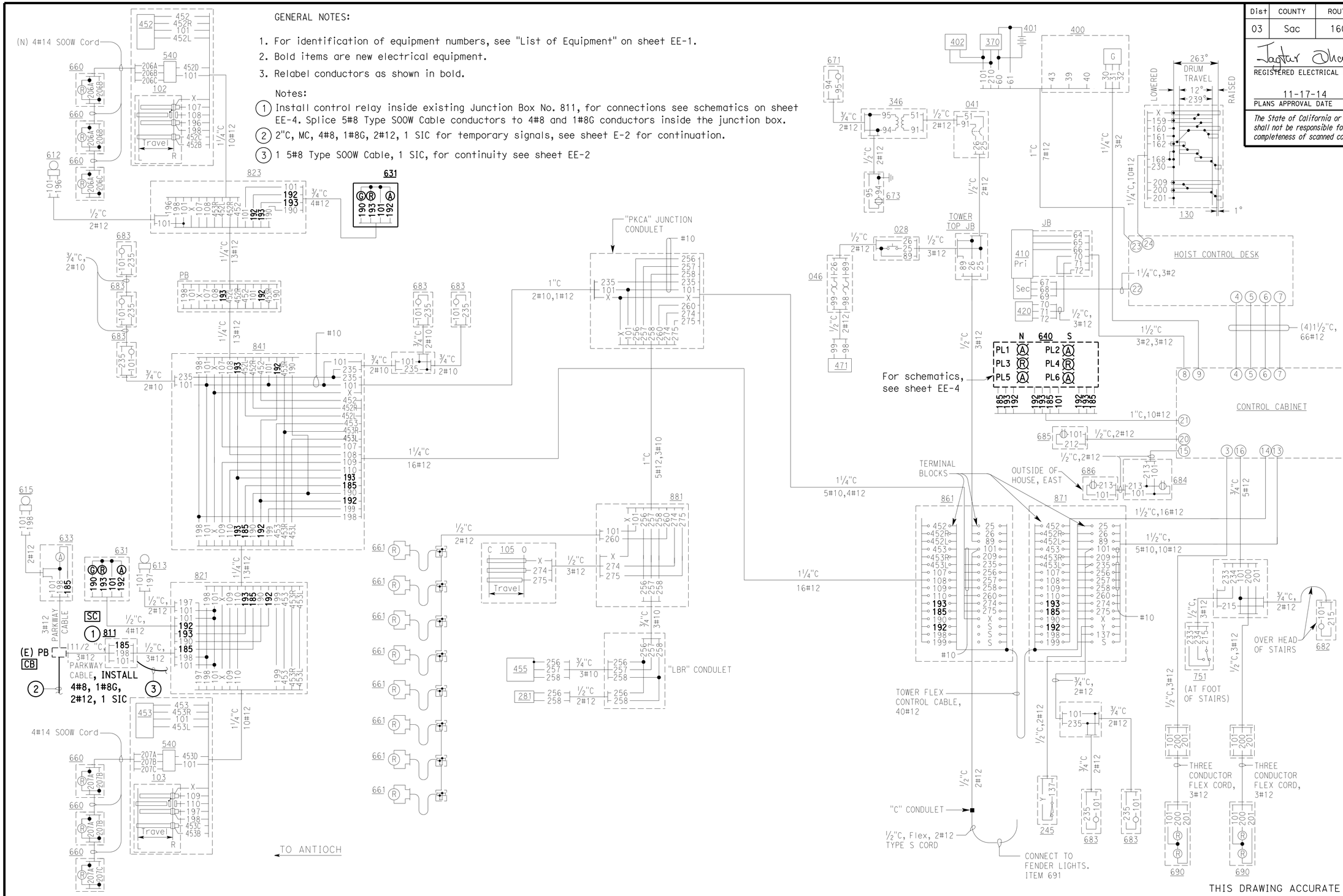

THIS DRAWING ACCURATE FOR ELECTRICAL WORK ONLY

DESIGN	BY Jagtar Dhaliwal	CHECKED Tommy Lee	
DETAILS	BY Ed D. Tapalla	CHECKED Jagtar Dhaliwal	
QUANTITIES	BY Jagtar Dhaliwal	CHECKED Tommy Lee	

STATE OF CALIFORNIA
DEPARTMENT OF TRANSPORTATION

DIVISION OF ENGINEERING SERVICES
ELECTRICAL-MECHANICAL-WATER AND WASTEWATER DESIGN

UNIT: 3618 CONTRACT No.: 3F3401
PROJECT NUMBER & PHASE: 03120002191

BRIDGE No. 24-0121
POST MILE L6.98

THREE MILE SLOUGH BRIDGE PAINT JOB

MODIFIED WIRING DIAGRAM - SOUTHSIDE

SHEET EE-6

ORIGINAL SCALE IN INCHES FOR REDUCED PLANS 0 1 2 3

DISREGARD PRINTS BEARING EARLIER REVISION DATES → 5-14-14 6-06-14 6-24-14 8-14-14 8-29-14 9-18-14 11-14-14

REVISION DATES (PRELIMINARY STAGE ONLY) SHEET OF

TAEMWW Imperial - CCSC Rev. 02/13

22-DEC-2014 14:03

P:\proj5\03\3f340\drafting\ee_06.dgn

GENERAL NOTE:

1. For identification of equipment numbers, see "List of Equipment" on sheet EE-3.

Dist	COUNTY	ROUTE	POST MILES TOTAL PROJECT	SHEET No.	TOTAL SHEETS
03	Sac	160	L7.0	58	61

Jagtar Dhaliwal 11-14-14
REGISTERED ELECTRICAL ENGINEER DATE

11-17-14
PLANS APPROVAL DATE

REGISTERED PROFESSIONAL ENGINEER JAGTAR DHALIWAL No. E16915 Exp. 06-30-15 ELEC STATE OF CALIFORNIA

The State of California or its officers or agents shall not be responsible for the accuracy or completeness of scanned copies of this plan sheet.

CALIFORNIA STATE FIRE MARSHAL APPROVED

Approval of this plan does not authorize or approve any omission or deviation from applicable regulations. Final approval is subject to field inspection. One set of approved plans shall be available on the project site at all times.

Reviewed by: SPENCER MEYER

Approval date: 10-30-14

CSFM FILE # 01-34-11-0009

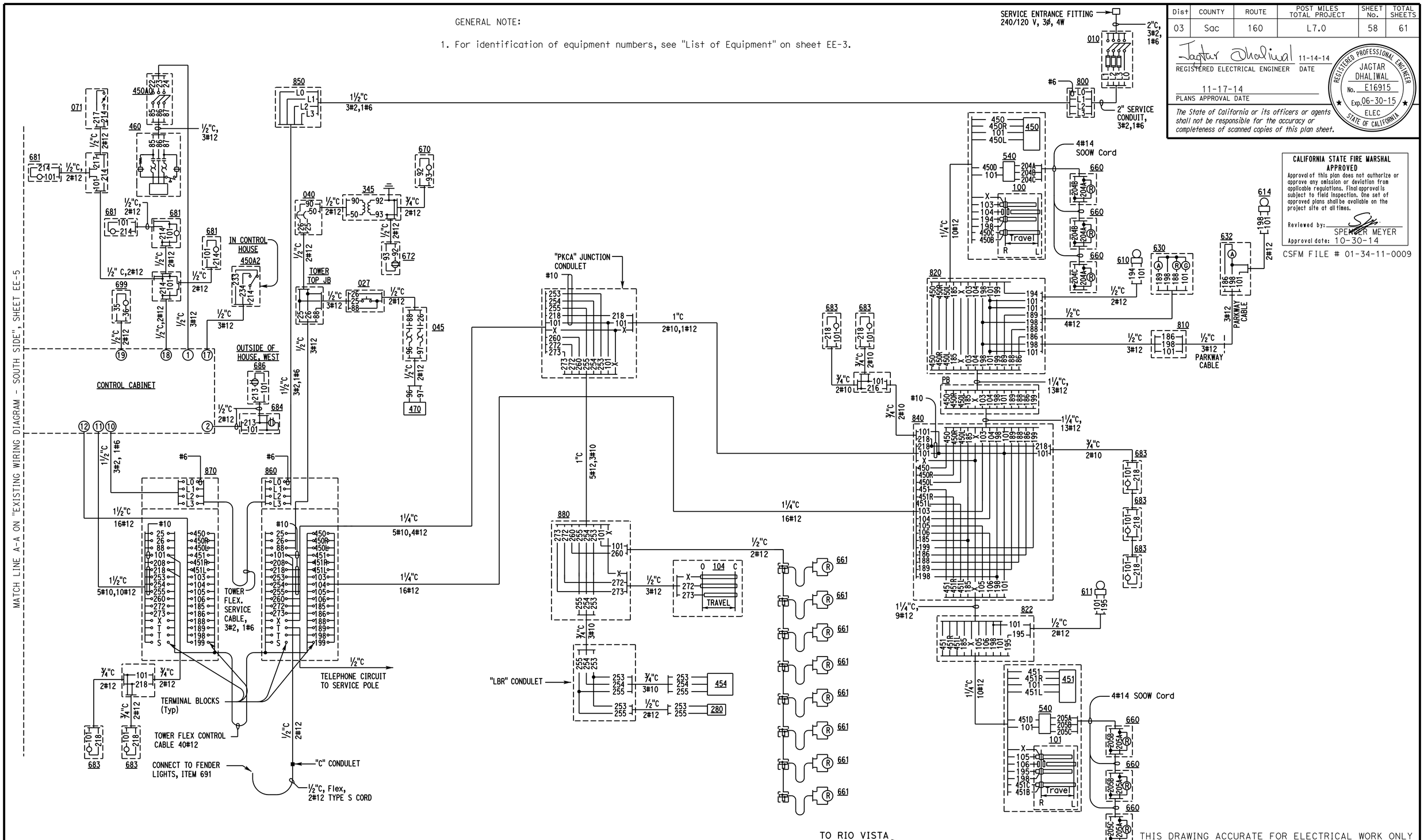

THIS DRAWING ACCURATE FOR ELECTRICAL WORK ONLY

DESIGN	BY Jagtar Dhaliwal	CHECKED Tommy Lee	
DETAILS	BY Ed D. Tapalla	CHECKED Jagtar Dhaliwal	
QUANTITIES	BY Jagtar Dhaliwal	CHECKED Tommy Lee	

STATE OF CALIFORNIA
DEPARTMENT OF TRANSPORTATION

DIVISION OF ENGINEERING SERVICES
ELECTRICAL-MECHANICAL-WATER AND WASTEWATER DESIGN

BRIDGE No. 24-0121
POST MILE L6.98

THREE MILE SLOUGH BRIDGE PAINT JOB

EXISTING WIRING DIAGRAM - NORTHSIDE

SHEET EE-7

TAEMWW Imperial - CCSC Rev. 02/13

ORIGINAL SCALE IN INCHES FOR REDUCED PLANS 0 1 2 3

UNIT: 3618 CONTRACT No.: 3F3401
PROJECT NUMBER & PHASE: 03120002191

DISREGARD PRINTS BEARING EARLIER REVISION DATES 08-08-14 11-14-14

REVISION DATES (PRELIMINARY STAGE ONLY) SHEET OF

22-DEC-2014 14:03

P:\proj5\03\3f340\drafting\ee_07.dgn

Dist	COUNTY	ROUTE	POST MILES TOTAL PROJECT	SHEET No.	TOTAL SHEETS
03	Sac	160	L7.0	59	61

Jagtar Dhaliwal 11-14-14
REGISTERED ELECTRICAL ENGINEER DATE

11-17-14
PLANS APPROVAL DATE

REGISTERED PROFESSIONAL ENGINEER JAGTAR DHALIWAL No. E16915 Exp. 06-30-15 ELEC STATE OF CALIFORNIA

The State of California or its officers or agents shall not be responsible for the accuracy or completeness of scanned copies of this plan sheet.

GENERAL NOTES:

1. For identification of equipment numbers, see "List of Equipment" on sheet EE-1.
2. Bold items are new electrical equipment.
3. Relabel conductor as shown in bold.

Notes:

(1) Splice 5#8 Type SOOW Cable conductors to 4#8 and 1#8G conductors inside the junction box.

(2) 2 "C, MC, 4#8, 1#8G, 1 SIC for temporary signals, see sheet E-3 for continuation.

(3) 1 5#8 Type SOOW Cable, 1 SIC, for continuity see sheet EE-2

CALIFORNIA STATE FIRE MARSHAL APPROVED

Approval of this plan does not authorize or approve any omission or deviation from applicable regulations. Final approval is subject to field inspection. One set of approved plans shall be available on the project site at all times.

Reviewed by: SPENCER MEYER

Approval date: 10-30-14

CSFM FILE # 01-34-11-0009

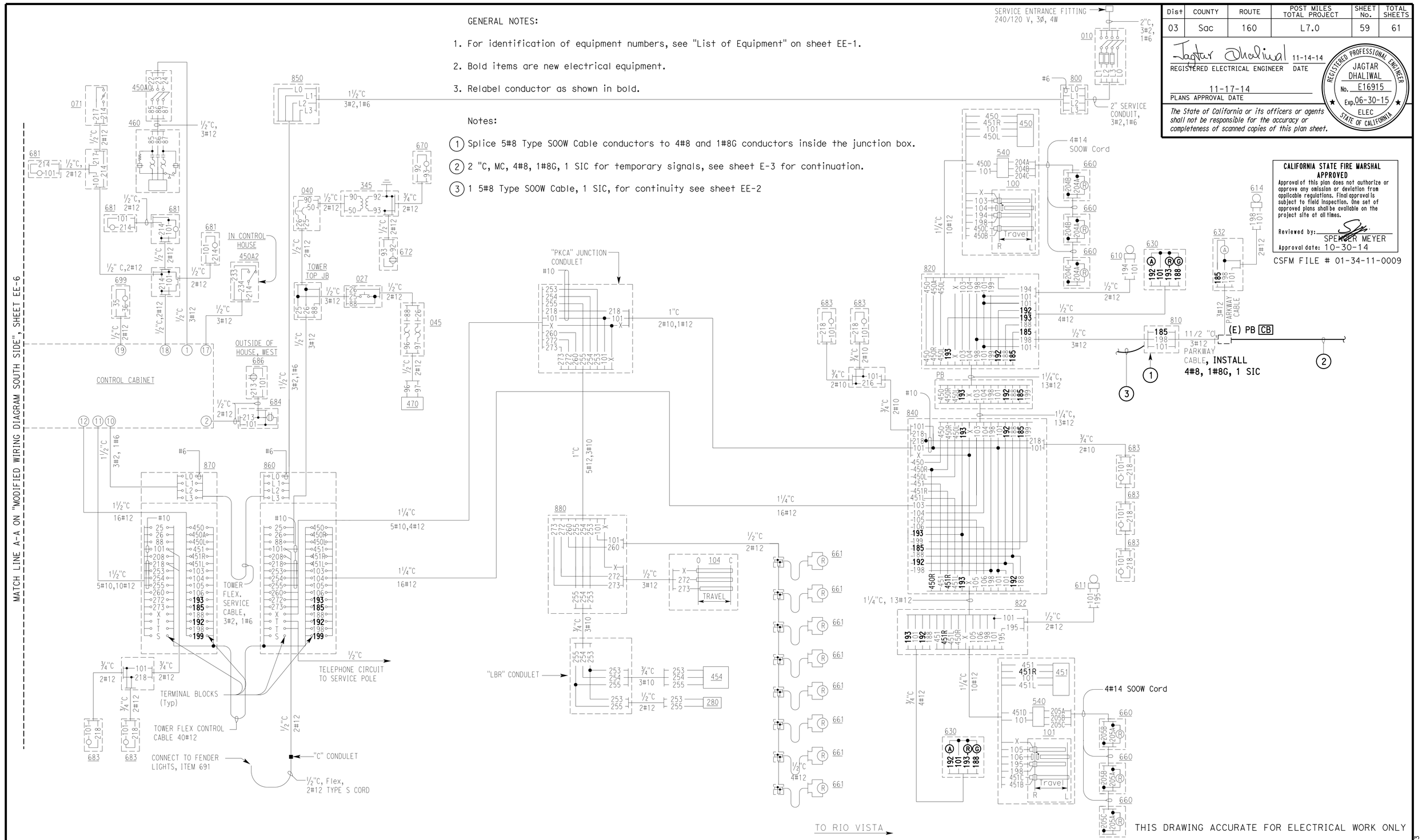

THIS DRAWING ACCURATE FOR ELECTRICAL WORK ONLY

	BY	CHECKED
DESIGN	Jagtar Dhaliwal	Tommy Lee
DETAILS	Ed D. Tapalla	Jagtar Dhaliwal
QUANTITIES	Jagtar Dhaliwal	Tommy Lee

STATE OF CALIFORNIA
DEPARTMENT OF TRANSPORTATION

DIVISION OF ENGINEERING SERVICES
ELECTRICAL-MECHANICAL-WATER AND WASTEWATER DESIGN

BRIDGE No. 24-0121
POST MILE L6.98

THREE MILE SLOUGH BRIDGE PAINT JOB

MODIFIED WIRING DIAGRAM - NORTHSIDE

SHEET EE-8

TAEMWW Imperial - CCSC Rev. 02/13

ORIGINAL SCALE IN INCHES FOR REDUCED PLANS 0 1 2 3

UNIT: 3618 CONTRACT No.: 3F3401
PROJECT NUMBER & PHASE: 03120002191

DISREGARD PRINTS BEARING EARLIER REVISION DATES

REVISION DATES (PRELIMINARY STAGE ONLY) 5-14-14 6-06-14 6-24-14 8-08-14 9-17-14 11-14-14 SHEET OF

22-DEC-2014 14:03

P:\proj5\03\3f340\drafting\ee_08.dgn

Dist	COUNTY	ROUTE	POST MILES TOTAL PROJECT	SHEET No.	TOTAL SHEETS
03	Sac	160	L7.0	60	61

Jagtar Dhaliwal 11-14-14
REGISTERED ELECTRICAL ENGINEER DATE

11-17-14
PLANS APPROVAL DATE

REGISTERED PROFESSIONAL ENGINEER JAGTAR DHALIWAL No. E16915 Exp. 06-30-15 ELEC STATE OF CALIFORNIA

The State of California or its officers or agents shall not be responsible for the accuracy or completeness of scanned copies of this plan sheet.

CALIFORNIA STATE FIRE MARSHAL APPROVED
Approval of this plan does not authorize or approve any omission or deviation from applicable regulations. Final approval is subject to field inspection. One set of approved plans shall be available on the project site at all times.
Reviewed by: SPENCER MEYER
Approval date: 10-30-14
CSFM FILE # 01-34-11-0009

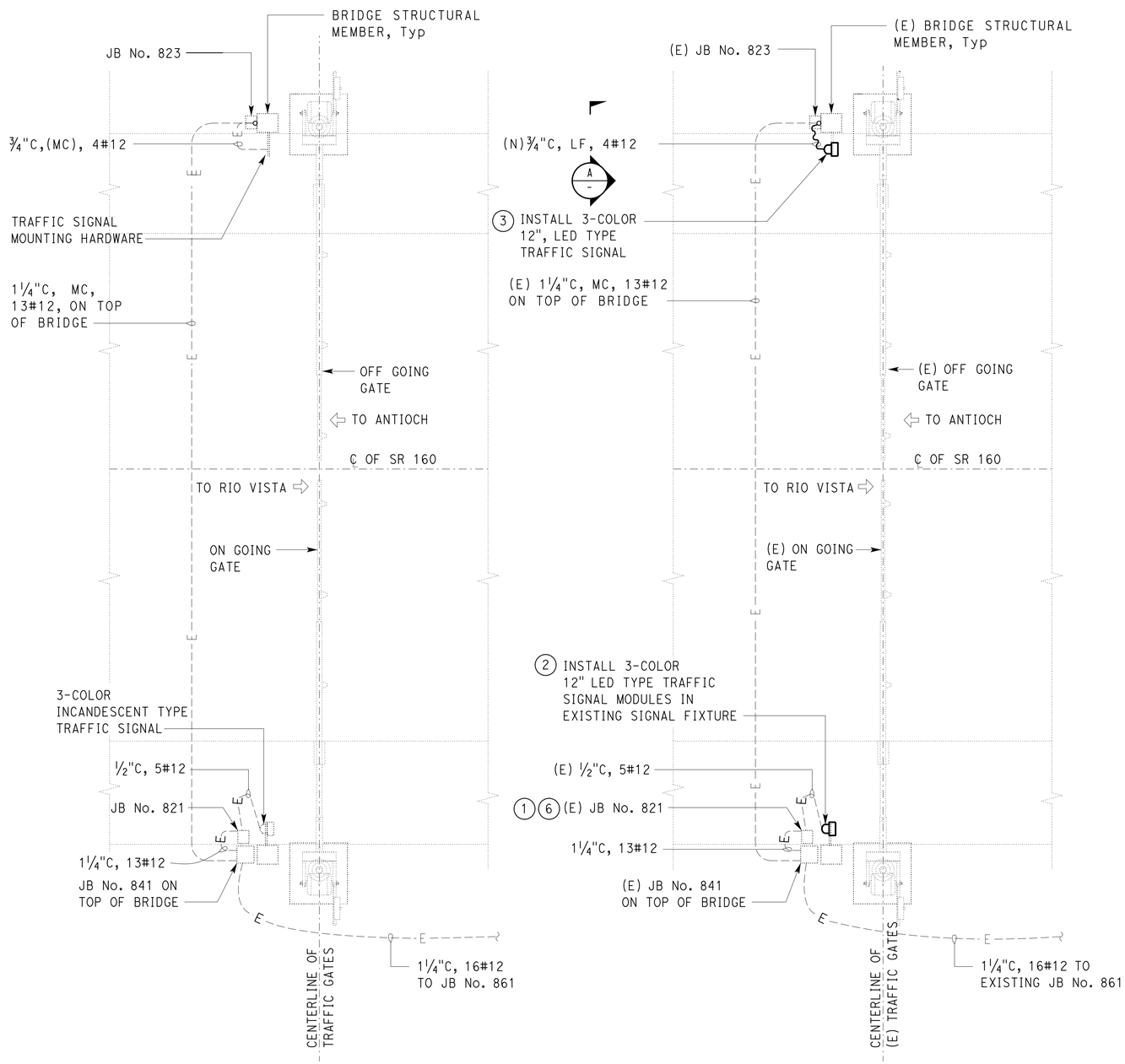

PARTIAL PLAN
NO SCALE

NOTES:

1. Inside existing Junction Box No. 821, identify conductors that supply existing functional 3-color traffic signal and reconnect conductors as shown on sheet EE-4. Splice existing conductors (conductors for supplying/energizing non-functional 3-color, LED type traffic signal head) to existing signal conductors supply power to existing functional signals for synchronized operation of both 3-color, LED type traffic signals.
2. Replace existing 3-color, 12" Incandescent type traffic signal modules with 3-color, 12" LED type signal modules. See detail A on this sheet.
3. Install new 3-color 12" section LED type signal by utilizing the existing mounting hardware when possible. Adjust viewing angle in a manner so that 3-color, LED type signal are clearly visible to the incoming vehicles/traffic. Rewire/wire signal head as required for proper operation.
4. Intercept existing ¾"C and install threaded conduit body and ¾" liquidtight flexible conduit.
5. Remove existing conduits and conduit body re-route existing conductors in new conduit.
6. Disconnect and remove existing control relay from the junction box 821 and reconnect conductors as shown on sheet EE-4.

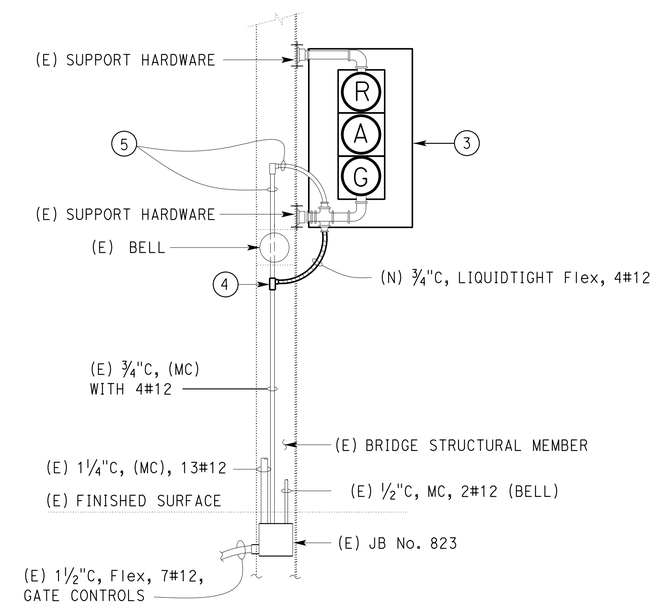

A ELEVATION
NO SCALE

(OFF GOING TRAFFIC SIGNAL SHOWN, ON GOING TRAFFIC SIGNAL SIMILAR)

THIS DRAWING ACCURATE FOR ELECTRICAL WORK ONLY

	BY	CHECKED
DESIGN	Jagtar Dhaliwal	Tommy Lee
DETAILS		Jagtar Dhaliwal
QUANTITIES	Jagtar Dhaliwal	Tommy Lee

STATE OF CALIFORNIA
DEPARTMENT OF TRANSPORTATION

DIVISION OF ENGINEERING SERVICES
ELECTRICAL-MECHANICAL-WATER AND WASTEWATER DESIGN

BRIDGE No. 24-0121
POST MILE L6.98

THREE MILE SLOUGH BRIDGE PAINT JOB
SOUTHSIDE BRIDGE TRAFFIC SIGNALS

SHEET **EE-9**

TAEMWW Imperial - CCSC Rev. 02/13

ORIGINAL SCALE IN INCHES FOR REDUCED PLANS 0 1 2 3

UNIT: 3618 CONTRACT No.: 3F3401
PROJECT NUMBER & PHASE: 03120002191

DISREGARD PRINTS BEARING EARLIER REVISION DATES → REVISION DATES (PRELIMINARY STAGE ONLY) 6-24-14 9-18-14 11-14-14 SHEET OF

22-DEC-2014 14:03
P:\proj5\03\3f340\drafting\ee_09.dgn

Dist	COUNTY	ROUTE	POST MILES TOTAL PROJECT	SHEET No.	TOTAL SHEETS
03	Sac	160	L7.0	61	61

Jagtar Dhaliwal 11-14-14
REGISTERED ELECTRICAL ENGINEER DATE

11-17-14
PLANS APPROVAL DATE

REGISTERED PROFESSIONAL ENGINEER JAGTAR DHALIWAL No. E16915 Exp. 06-30-15 ELEC STATE OF CALIFORNIA

The State of California or its officers or agents shall not be responsible for the accuracy or completeness of scanned copies of this plan sheet.

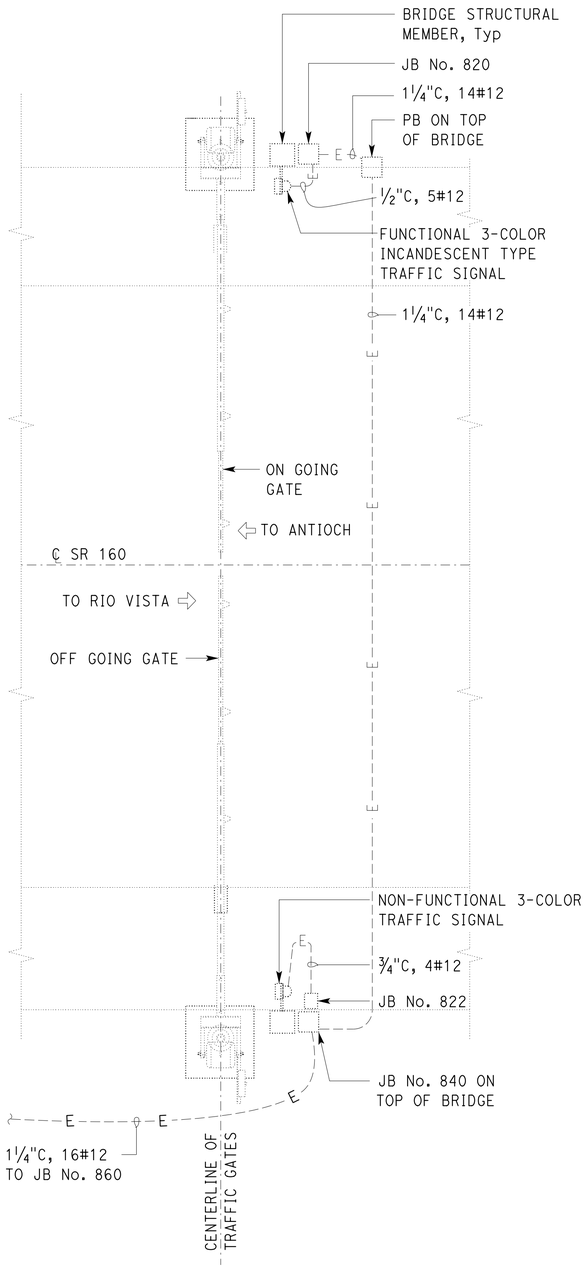

EXISTING

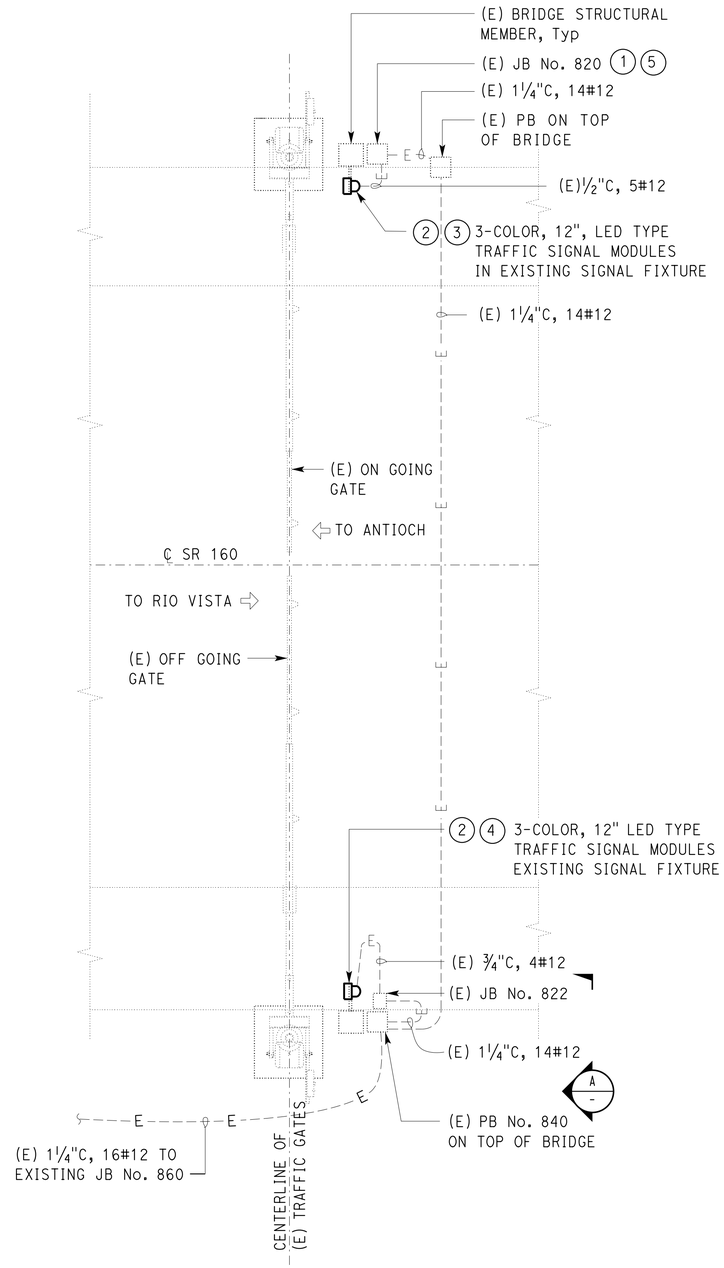

MODIFIED

PARTIAL PLAN
NO SCALE

NOTES:

1. Inside existing Junction Box No. 820, identify conductors that supply existing functional 3-color traffic signal and reconnect conductors as shown on sheet EE-4. Splice existing conductors (conductors for supplying/energizing non-functional 3-color, LED type traffic signal head) to existing signal conductors supply power to existing functional signals for synchronized operation of both 3-color, LED type traffic signals.
2. Replace existing 3-color, 12" Incandescent type traffic signal modules with 3-color, 12" LED type signal modules.
3. Install one 12" Cap Visor for green section. See Typical Detail A on this sheet.
4. Install two 12" Cap Visors for Red and Yellow sections. Replace the damaged fixture back plate. Adjust viewing angle in a manner so that 3-color, LED type signal head are clearly visible to the incoming vehicles/traffic. Rewire/wire signal head as required for proper operation.
5. Disconnect and remove existing control relay from the junction box 820 and reconnect conductors as shown on sheet EE-4.

CALIFORNIA STATE FIRE MARSHAL APPROVED
Approval of this plan does not authorize or approve any omission or deviation from applicable regulations. Final approval is subject to field inspection. One set of approved plans shall be available on the project site at all times.
Reviewed by: SPENCER MEYER
Approval date: 10-30-14
CSFM FILE # 01-34-11-0009

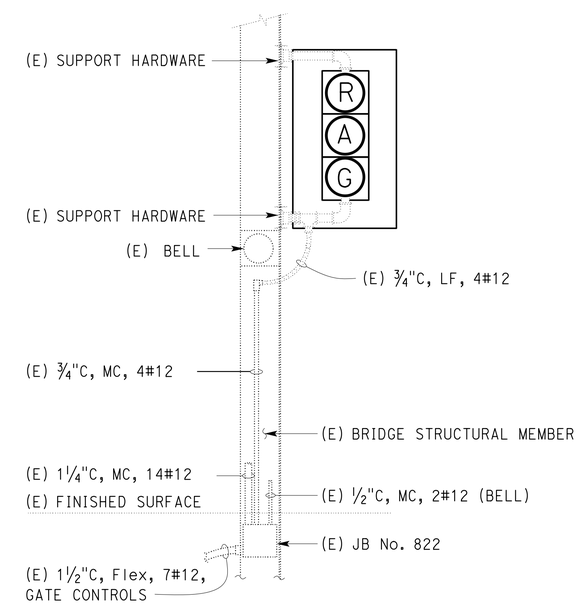

A ELEVATION
NO SCALE
(OFF GOING TRAFFIC SIGNAL SHOWN, ON GOING TRAFFIC SIGNAL SIMILAR)

THIS DRAWING ACCURATE FOR ELECTRICAL WORK ONLY

	BY	CHECKED
DESIGN	Jagtar Dhaliwal	Tommy Lee
DETAILS	Ed D. Tapalla	Jagtar Dhaliwal
QUANTITIES	Jagtar Dhaliwal	Tommy Lee

STATE OF CALIFORNIA
DEPARTMENT OF TRANSPORTATION

DIVISION OF ENGINEERING SERVICES
ELECTRICAL-MECHANICAL-WATER AND WASTEWATER DESIGN

BRIDGE No. 24-0121
POST MILE L6.98

THREE MILE SLOUGH BRIDGE PAINT JOB
NORTHSIDE BRIDGE TRAFFIC SIGNALS

SHEET EE-10

TAEMWW Imperial - CCSC Rev. 02/13

ORIGINAL SCALE IN INCHES FOR REDUCED PLANS 0 1 2 3

UNIT: 3618 CONTRACT No.: 3F3401
PROJECT NUMBER & PHASE: 03120002191

DISREGARD PRINTS BEARING EARLIER REVISION DATES
REVISION DATES (PRELIMINARY STAGE ONLY) 6-24-14 8-14-14 9-18-14 11-14-14
SHEET OF

22-DEC-2014 14:04
P:\proj5\03\3f340\drafting\ee_10.dgn