DIST.	COUNTY	ROUTE	POST MILES TOTAL PROJECT	SHEET NO.	TOTAL SHEETS
03	ED	50	R28.1	35	52

REGISTERED CIVIL ENGINEER — DATE 09-01-09

REGISTERED PROFESSIONAL ENGINEER — Dai Lu — No. 67416 — Exp. 12-31-10 — CIVIL — STATE OF CALIFORNIA

11-16-09
PLANS APPROVAL DATE

The State of California or its officers or agents shall not be responsible for the accuracy or completeness of electronic copies of this plan sheet.

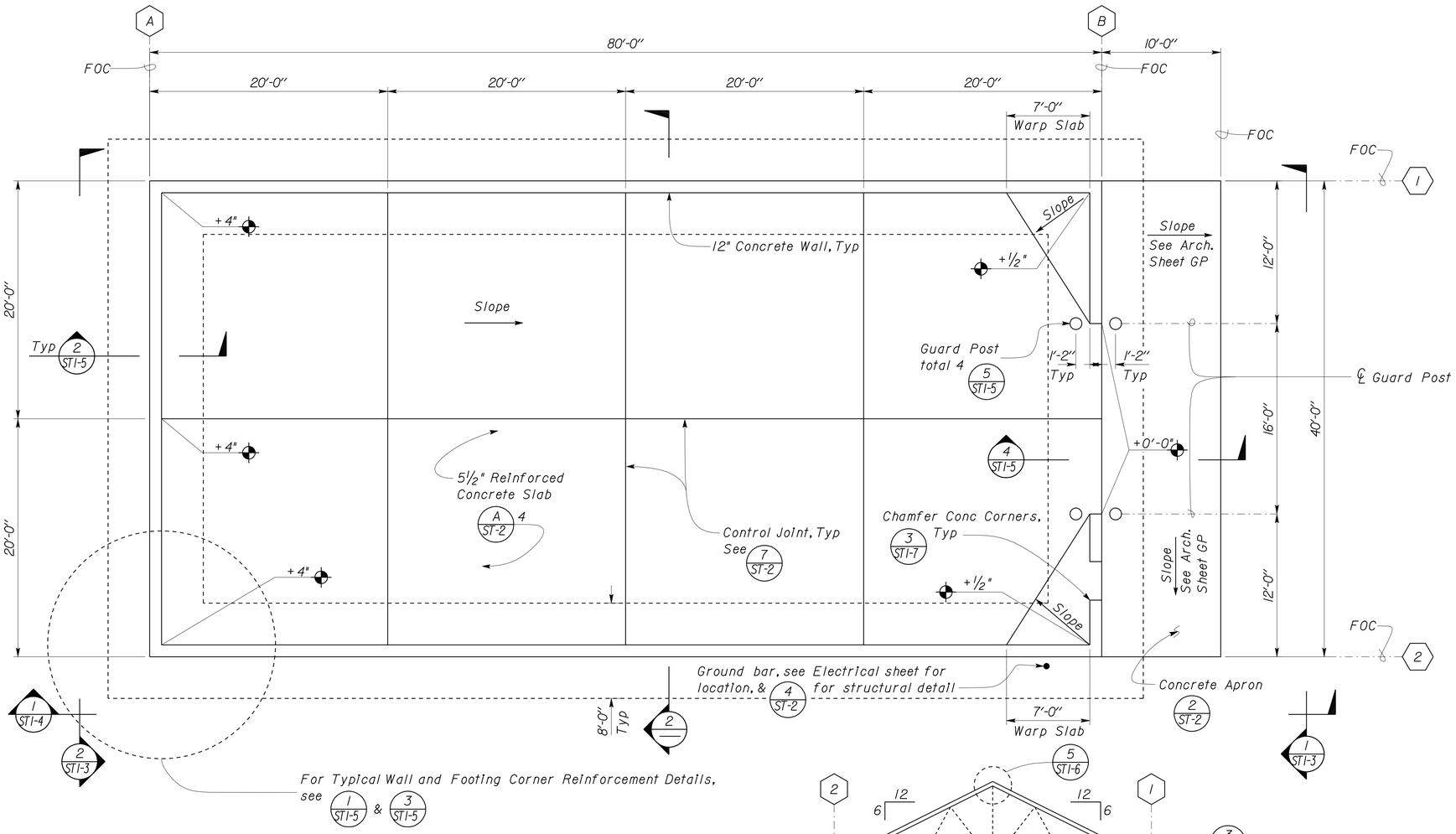

1 FOUNDATION PLAN
Scale 3/16" = 1'-0"

Elevation 3537.13 = Datum 0'-0"

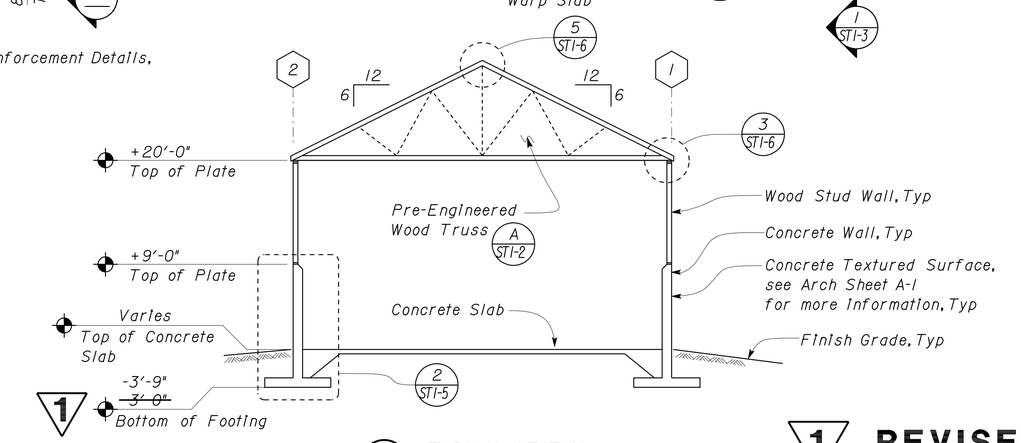

2 TYPICAL SECTION
Scale 1/8" = 1'-0"

A DESIGN NOTES

1. Design: The building work on this project has been designed to conform to the 2007 California Building Code.

a. Loads :

Live Loads : Roof = 20 PSF
Ground Snow P_g = 63 PSF
P_f = 38 PSF
C_e = 0.9
C_t = 1.2
I = 0.8

Seismic : S_S = 0.561g, S_1 = 0.208g
S_{DS} = 0.374, S_{D1} = 0.139
SDC = C
C_S = 0.0575
R = 6.5, I = 1.0,
Occupancy Category : I
Building Frame System : Light Framed Wall Sheathed with wood structural panels Rated for Shear Resistance.
Equivalent Lateral Force Analysis:
$V_{SEISMIC}$: 5.20 Kips

Wind Speed : 100 MPH , Exposure C
Importance Factor = 0.87
Internal Pressure Coefficient GC_{pi} = ±0.18

b. Reinforced Concrete (Ultimate Strength Design):
f'c = 3,000 PSI
f_y = 60,000 PSI
The maximum water/cementitious material ratio shall not exceed 0.40

c. Structural Steel (Allowable Strength Design):
f_y = 36,000 PSI

d. Timber: Sawn Lumber Sheet ST-1A & ST-1B
Pre-Engineered Truss Sheets ST1-2

e. Foundation :
Soils report dated: DEC 31 , 2008
Allowable Soil Pressure (DL + LL): 4000 PSF

1 **REVISED PER ADDENDUM No. 1 DATED JANUARY 13, 2010**

	BY	CHECKED
DESIGN	EDWARD ZHANG	JOE CAMILLERI
DETAILS	EDWARD ZHANG	JOE CAMILLERI
QUANTITIES		

STATE OF CALIFORNIA
DEPARTMENT OF TRANSPORTATION

DIVISION OF ENGINEERING SERVICES
ARCHITECTURAL AND STRUCTURAL DESIGN

BRIDGE NO. 19M5737
POST MILE R28.1

CAMINO SAND STORAGE FACILITY
SAND STORAGE BUILDING
FOUNDATION PLAN

SHEET **ST1-1**

DOES SD Imperial Rev. 9/02

ORIGINAL SCALE IN INCHES FOR REDUCED PLANS 0 1 2 3

CU 03021
EA 3E4601

DISREGARD PRINTS BEARING EARLIER REVISION DATES → 10-24-08 12-19-08 06-17-09 09-01-09

REVISION DATES (PRELIMINARY STAGE ONLY) SHEET OF

11-JAN-2010 05:51
st1_01.add

DIST.	COUNTY	ROUTE	POST MILES TOTAL PROJECT	SHEET NO.	TOTAL SHEETS
03	ED	50	R28.1	39	52

REGISTERED CIVIL ENGINEER — DATE 09-01-09

REGISTERED PROFESSIONAL ENGINEER Dai Lu No. 67416 Exp. 12-31-10 CIVIL STATE OF CALIFORNIA

11-16-09
PLANS APPROVAL DATE

The State of California or its officers or agents shall not be responsible for the accuracy or completeness of electronic copies of this plan sheet.

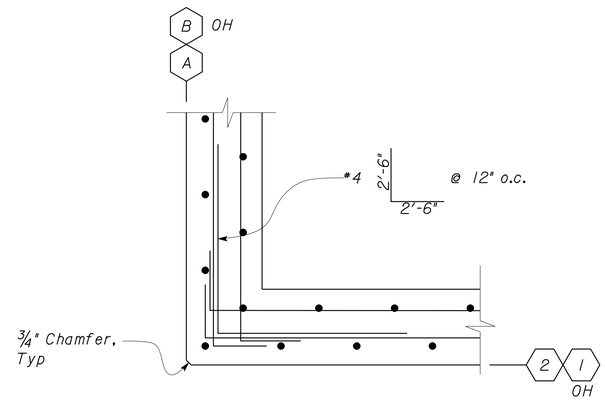

1 TYPICAL WALL CORNER REINFORCEMENT
Scale 1" = 1'-0"

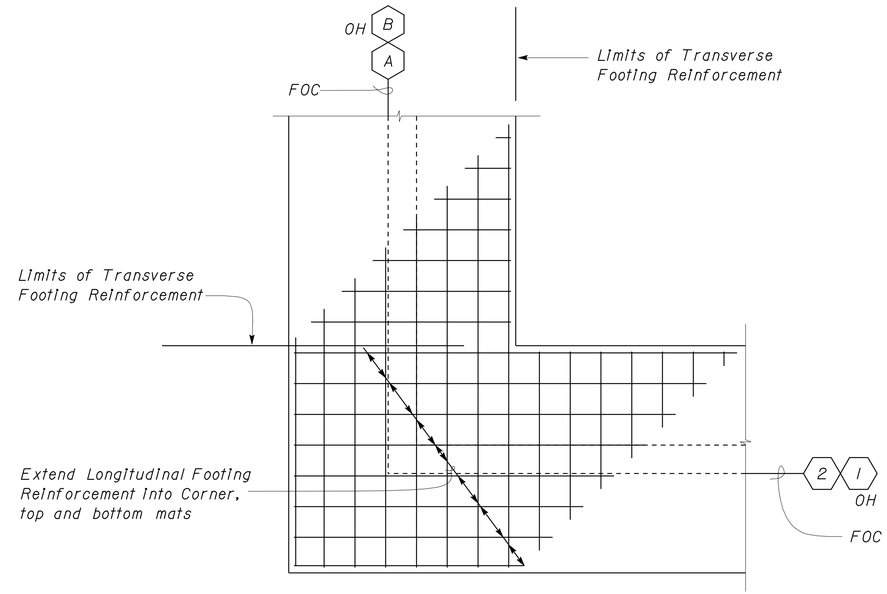

3 TYPICAL FOOTING CORNER REINFORCEMENT
Scale 3/8" = 1'-0"

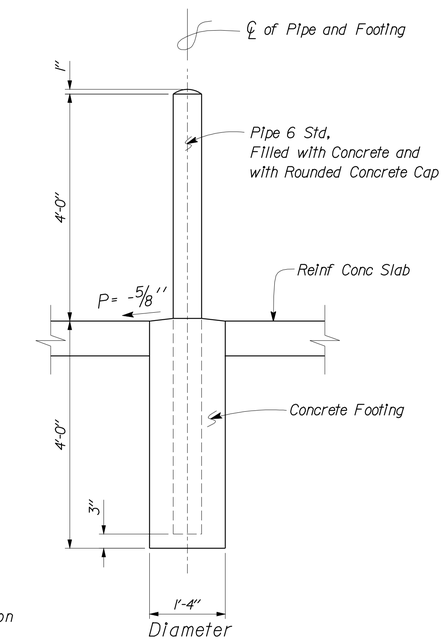

5 GUARD POST DETAIL
Scale 3/4" = 1'-0"

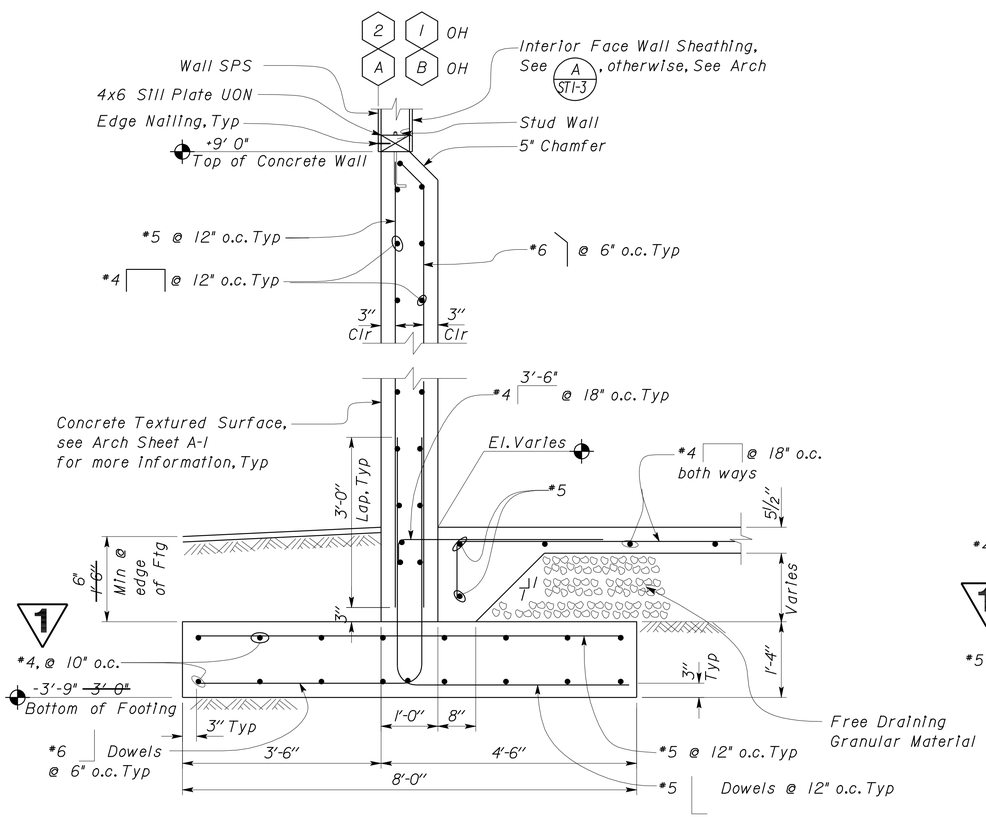

2 WALL/FOOTING SECTION
Scale 3/4" = 1'-0"

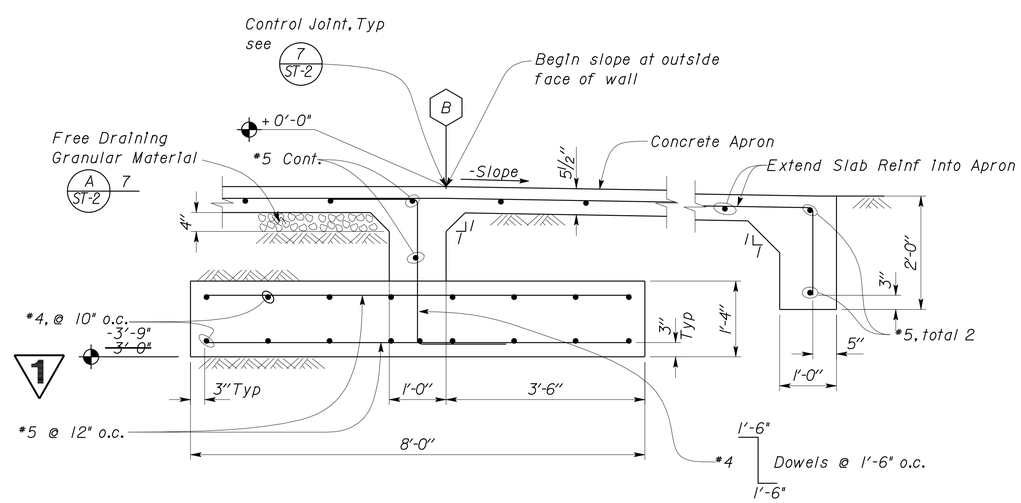

4 FOOTING SECTION AT WALL OPENING
Scale 3/4" = 1'-0"

1 **REVISED PER ADDENDUM No. 1 DATED JANUARY 13, 2010**

	BY	CHECKED
DESIGN	EDWARD ZHANG	JOE CAMILLERI
DETAILS	EDWARD ZHANG	JOE CAMILLERI
QUANTITIES		

STATE OF CALIFORNIA DEPARTMENT OF TRANSPORTATION

DIVISION OF ENGINEERING SERVICES ARCHITECTURAL AND STRUCTURAL DESIGN

BRIDGE NO. 19M5737
POST MILE R28.1

CAMINO SAND STORAGE FACILITY
SAND STORAGE BUILDING
FOUNDATION DETAILS

SHEET **ST1-5**

DOES SD Imperial Rev. 9/02

ORIGINAL SCALE IN INCHES FOR REDUCED PLANS 0 1 2 3

CU 03021
EA 3E4601

DISREGARD PRINTS BEARING EARLIER REVISION DATES → 02-03-09 06-17-09 09-01-09

REVISION DATES (PRELIMINARY STAGE ONLY) | SHEET | OF

11-JAN-2010 05:51

st1_05.add