| Dist | COUNTY | ROUTE | POST MILES TOTAL PROJECT | SHEET No. | TOTAL SHEETS |
|---|---|---|---|---|---|
| 03 | But | 70 | 26.7/27.1 | 1 | 83 |

ACBHSTP-P070(129)

STATE OF CALIFORNIA
# DEPARTMENT OF TRANSPORTATION

# PROJECT PLANS FOR CONSTRUCTION ON
# STATE HIGHWAY

## IN BUTTE COUNTY
## ABOUT 10.9 MILES NORTH OF OROVILLE
## FROM 0.2 MILE EAST OF PENTZ ROAD
## TO 0.2 MILE EAST OF CHEROKEE ROAD

TO BE SUPPLEMENTED BY STANDARD PLANS DATED 2010

INDEX OF PLANS


| SHEET No. | DESCRIPTION |
|---|---|
| 1 | TITLE AND LOCATION MAP |
| 2 | TYPICAL CROSS SECTIONS |
| 3-4 | LAYOUTS |
| 5-10 | CONSTRUCTION DETAILS |
| 11 | DRAINAGE PLAN, PROFILE AND QUANTITIES |
| 12 | CONSTRUCTION AREA SIGNS |
| 13-21 | STAGE CONSTRUCTION PLANS AND DETAILS |
| 22-27 | TRAFFIC HANDLING PLANS AND SIGN PLANS |
| 28 | TRAFFIC HANDLING QUANTITIES |
| 29-30 | PAVEMENT DELINEATION PLANS AND SIGN PLANS |
| 31 | PAVEMENT DELINEATION QUANTITIES |
| 32-34 | SIGN DETAILS AND SIGN QUANTITIES |
| 35 | SUMMARY OF QUANTITIES |
| 36 | EROSION CONTROL PLAN AND QUANTITIES |
| 37-56 | REVISED STANDARD PLANS |

STRUCTURE PLANS

| | |
|---|---|
| 57-72 | CHEROKEE OVERHEAD, Br No. 12-0137 |
| 73-83 | PENTZ OVERHEAD, Br No. 12-0138 |


THE STANDARD PLANS LIST APPLICABLE TO THIS CONTRACT IS INCLUDED IN THE NOTICE TO BIDDERS AND SPECIAL PROVISIONS BOOK.

LOCATION MAP

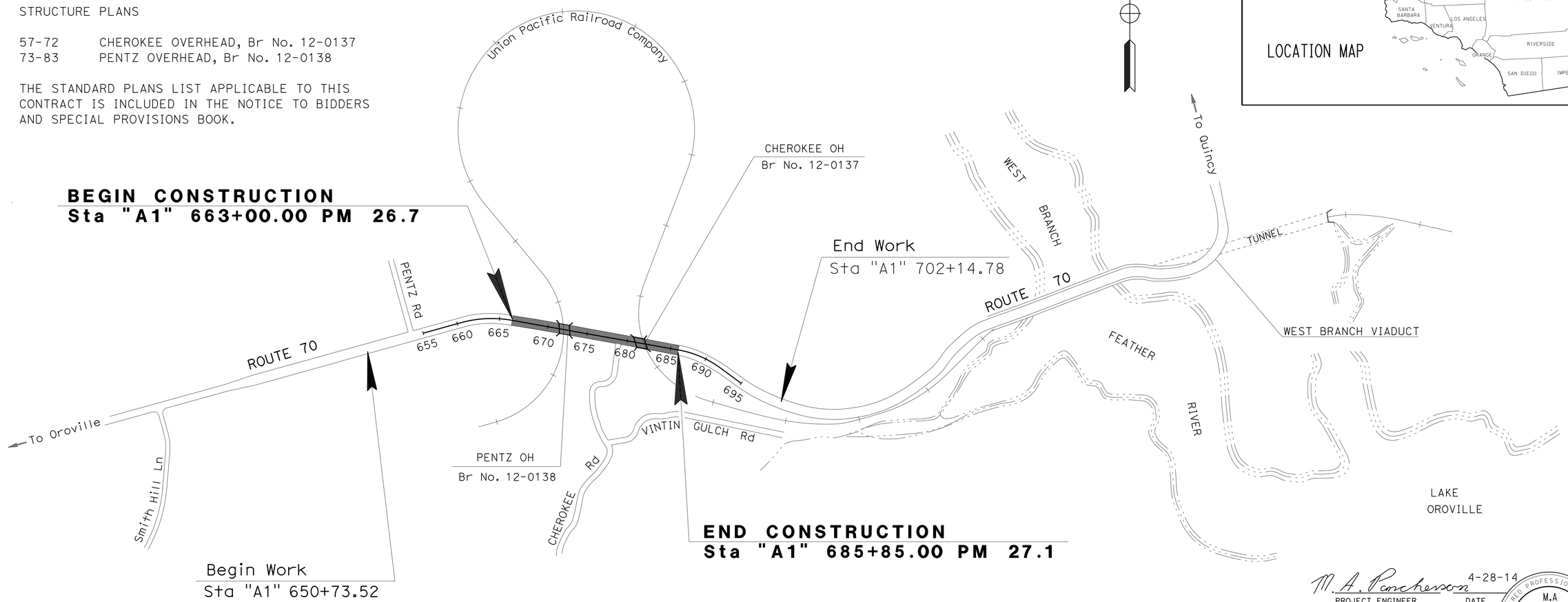


M. A. Panchesson 4-28-14
PROJECT ENGINEER DATE
REGISTERED CIVIL ENGINEER

April 28, 2014
PLANS APPROVAL DATE

REGISTERED PROFESSIONAL ENGINEER
M.A PANCHESSON
No. 44125
Exp. 06-30-15
CIVIL
STATE OF CALIFORNIA

*THE STATE OF CALIFORNIA OR ITS OFFICERS OR AGENTS SHALL NOT BE RESPONSIBLE FOR THE ACCURACY OR COMPLETENESS OF SCANNED COPIES OF THIS PLAN SHEET.*

PROJECT MANAGER MARTIN VILLANUEVA
DESIGN ENGINEER ALI KIANI

THE CONTRACTOR SHALL POSSESS THE CLASS (OR CLASSES) OF LICENSE AS SPECIFIED IN THE "NOTICE TO BIDDERS."

NO SCALE

| | |
|---|---|
| CONTRACT No. | 03-3E1204 |
| PROJECT ID | 0300000474 |

LAST REVISION 03-10-14
DATE PLOTTED => 08-MAY-2014
TIME PLOTTED => 14:04

| Dist | COUNTY | ROUTE | POST MILES TOTAL PROJECT | SHEET No. | TOTAL SHEETS |
|---|---|---|---|---|---|
| 03 | But | 70 | 26.7/27.1 | 2 | 83 |

M. A. Panchesson 4-28-14
REGISTERED CIVIL ENGINEER DATE

4-28-14
PLANS APPROVAL DATE

REGISTERED PROFESSIONAL ENGINEER M.A PANCHESSON No. 44125 Exp.06-30-15 CIVIL STATE OF CALIFORNIA

*THE STATE OF CALIFORNIA OR ITS OFFICERS OR AGENTS SHALL NOT BE RESPONSIBLE FOR THE ACCURACY OR COMPLETENESS OF SCANNED COPIES OF THIS PLAN SHEET.*

## NOTES:

1. DIMENSIONS OF THE PAVEMENT STRUCTURES (STRUCTURAL SECTIONS) ARE SUBJECT TO TOLERANCES SPECIFIED IN THE STANDARD SPECIFICATIONS.
2. EXISTING PAVEMENT SECTIONS SHOWN ARE BASED ON AS-BUILT INFORMATION AND ARE SUBJECT TO VARIATION DUE TO CONSTRUCTION TOLERANCES AND INTERIM ROADWAY ACTIVITIES.
3. FOR GUARDRAIL LOCATION, SEE CONSTRUCTION DETAILS.
4. FOR DIKE LOCATIONS AND TYPES, SEE SUMMARY OF QUANTITES.
5. FOR ROADWAY EXCAVATION, SEE CONSTRUCTION DETAILS.
6. FOR SHOULDER BACKING AND CRACK TREATEMENT, SEE SUMMARY OF QUANTITIES.

## PAVEMENT CLIMATE REGION

LOW MOUNTAIN

## ABBREVIATION:

ROE - RIGHT OF ENTRY

## TYPICAL PAVEMENT STRUCTURAL SECTIONS

1 — Exist STRUCTURAL SECTION
0.18' AC
0.25' AC
0.70' CTB
0.60' AB

2 — 0.25' HMA (TYPE A)

3 — 0.40' HMA (TYPE A)
1.00' CLASS 2 AB

4 — 0.15' HMA (TYPE A)

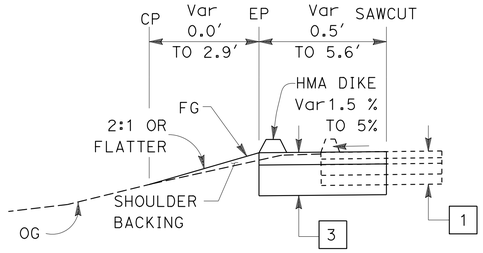


"A1" 673+25.43 TO 674+48.97
"A1" 669+49.00 TO 669+56.17

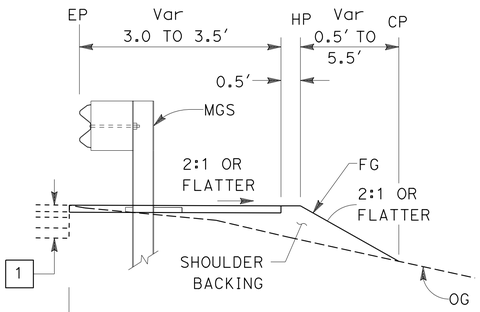


"A1" 672+24.65 TO 673+14.45
"A1" 682+27.69 TO 683+33.45
"A1" 678+80.64 TO 679+25.48

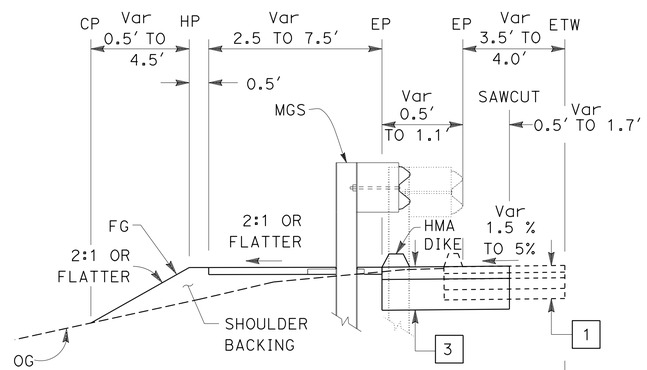


"A1" 669+44.36 TO 670+58.88
672+18.58 TO 674+25.43
679+13.98 TO 680+19.67

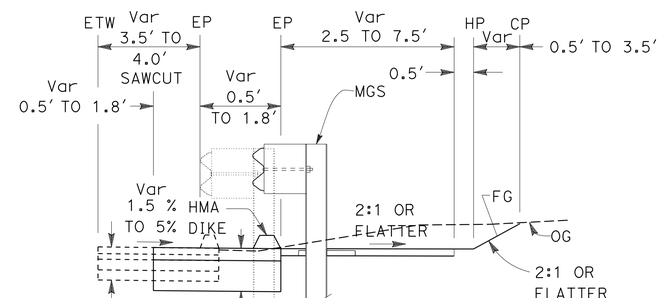


"A1" 669+51.08 TO 670+65.57
679+25.48 TO 680+39.75

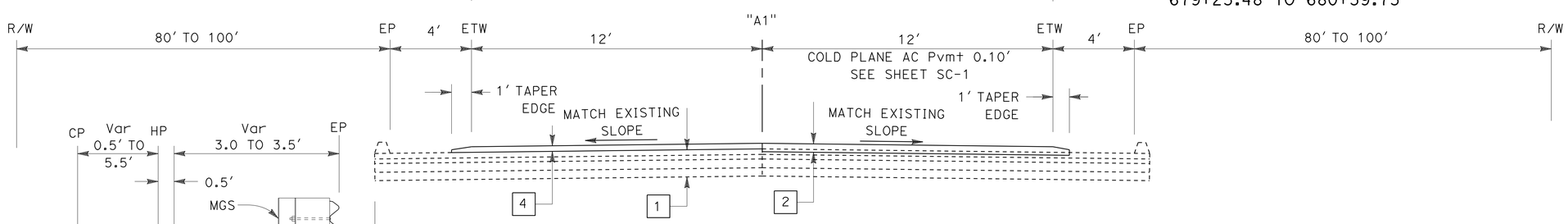


"A1" 663+00.00 TO "A1" 670+69.90
"A1" 672+16.86 TO "A1" 680+36.84
"A1" 682+11.22 TO "A1" 685+85.00

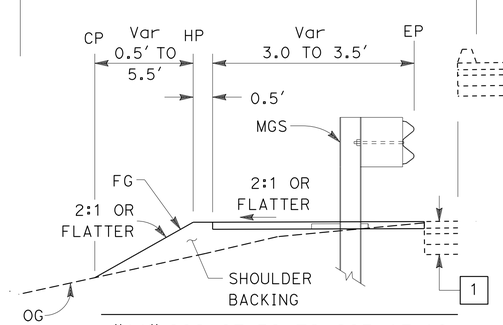


"A1" 682+07.56 TO 683+13.19

**ROUTE 70**

# TYPICAL CROSS SECTIONS

NO SCALE

**X-1**

STATE OF CALIFORNIA - DEPARTMENT OF TRANSPORTATION
Caltrans® DESIGN

FUNCTIONAL SUPERVISOR: ALI KIANI
CALCULATED-DESIGNED BY: DAVID ROBERTS
CHECKED BY: MIKE PANCHESSON
REVISED BY
DATE REVISED

LAST REVISION 03-26-14
DATE PLOTTED => 08-MAY-2014
TIME PLOTTED => 14:04

| Dist | COUNTY | ROUTE | POST MILES TOTAL PROJECT | SHEET No. | TOTAL SHEETS |
|---|---|---|---|---|---|
| 03 | But | 70 | 26.7/27.1 | 3 | 83 |

M. A. Panchesson 4-28-14
REGISTERED CIVIL ENGINEER DATE

4-28-14
PLANS APPROVAL DATE

REGISTERED PROFESSIONAL ENGINEER M.A PANCHESSON No. 44125 Exp. 06-30-15 CIVIL STATE OF CALIFORNIA

*THE STATE OF CALIFORNIA OR ITS OFFICERS OR AGENTS SHALL NOT BE RESPONSIBLE FOR THE ACCURACY OR COMPLETENESS OF SCANNED COPIES OF THIS PLAN SHEET.*

## NOTES:

1. FOR ACCURATE RIGHT OF WAY DATA, CONTACT RIGHT OF WAY ENGINEERING AT THE DISTRICT OFFICE.
2. FOR COLD PLANE AC Pvmt, SEE STAGE CONSTRUCTION PLANS.
3. ELECTRONICALLY DETECTED SPRINT FIBER OPTIC CABLE 6'-0"± FROM ABUTMENT FACE AND 3'-0"± BELOW OG.

## ABBREVIATION:

ROE - RIGHT OF ENTRY

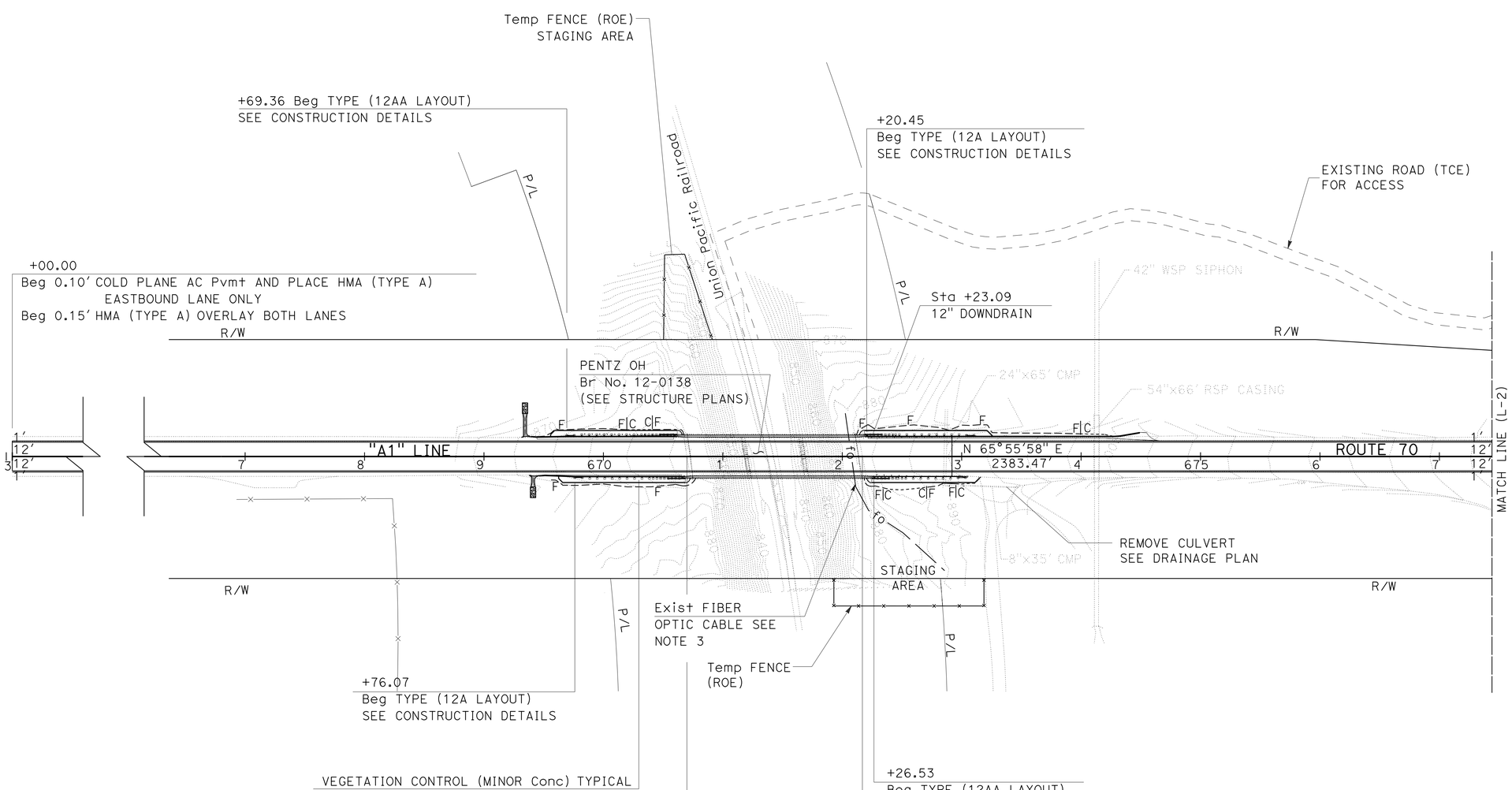


# LAYOUT

SCALE: 1" = 50'

**L-1**

STATE OF CALIFORNIA - DEPARTMENT OF TRANSPORTATION
Caltrans
DESIGN

FUNCTIONAL SUPERVISOR: ALI KIANI
CALCULATED-DESIGNED BY: DAVID ROBERTS
CHECKED BY: MIKE PANCHESSON
REVISED BY
DATE REVISED

LAST REVISION 03-06-14
DATE PLOTTED => 08-MAY-2014
TIME PLOTTED => 14:04

| Dist | COUNTY | ROUTE | POST MILES TOTAL PROJECT | SHEET No. | TOTAL SHEETS |
|---|---|---|---|---|---|
| 03 | But | 70 | 26.7/27.1 | 4 | 83 |

M. A. Panchesson 4-28-14
REGISTERED CIVIL ENGINEER DATE

4-28-14
PLANS APPROVAL DATE

REGISTERED PROFESSIONAL ENGINEER M.A PANCHESSON No. 44125 Exp. 06-30-15 CIVIL STATE OF CALIFORNIA

*THE STATE OF CALIFORNIA OR ITS OFFICERS OR AGENTS SHALL NOT BE RESPONSIBLE FOR THE ACCURACY OR COMPLETENESS OF SCANNED COPIES OF THIS PLAN SHEET.*

## NOTES:

1. FOR ACCURATE RIGHT OF WAY DATA, CONTACT RIGHT OF WAY ENGINEERING AT THE DISTRICT OFFICE.

2. ELECTRONICALLY DETECTED SPRINT FIBER OPTIC CABLE 10'-0"± FROM PIER 2 AND 3'-0"± BELOW OG.

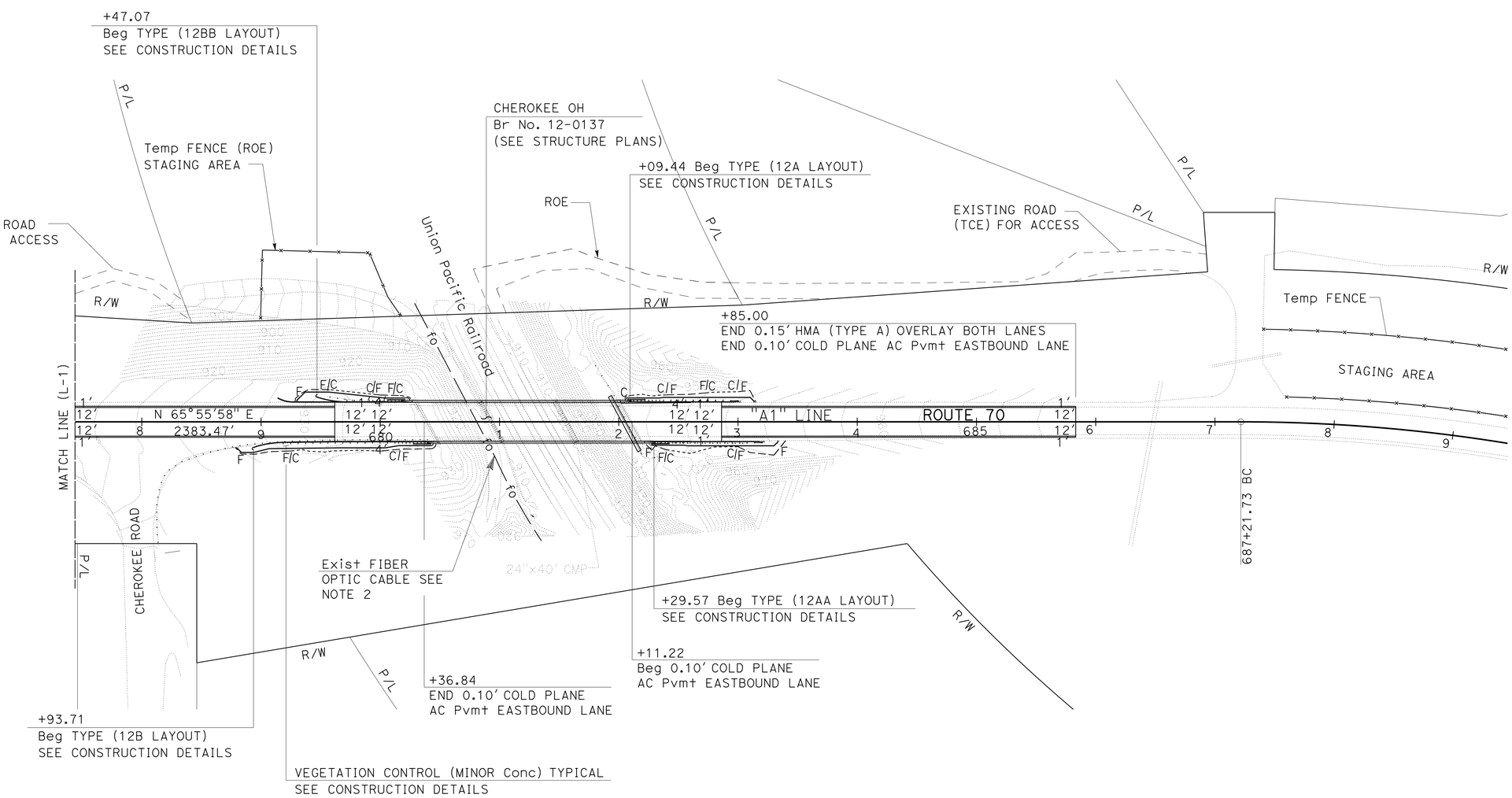


**LAYOUT**
SCALE: 1" = 50'
**L-2**

STATE OF CALIFORNIA - DEPARTMENT OF TRANSPORTATION
Caltrans® **DESIGN**
FUNCTIONAL SUPERVISOR: ALI KIANI
CALCULATED-DESIGNED BY: DAVID ROBERTS
CHECKED BY: MIKE PANCHESSON
REVISED BY
DATE REVISED

LAST REVISION 03-06-14 | DATE PLOTTED => 08-MAY-2014 | TIME PLOTTED => 14:04

| Dist | COUNTY | ROUTE | POST MILES TOTAL PROJECT | SHEET No. | TOTAL SHEETS |
|---|---|---|---|---|---|
| 03 | But | 70 | 26.7/27.1 | 5 | 83 |

M. A. Panchesson 4-28-14
REGISTERED CIVIL ENGINEER DATE

4-28-14
PLANS APPROVAL DATE

REGISTERED PROFESSIONAL ENGINEER M.A PANCHESSON No. 44125 Exp. 06-30-15 CIVIL STATE OF CALIFORNIA

*THE STATE OF CALIFORNIA OR ITS OFFICERS OR AGENTS SHALL NOT BE RESPONSIBLE FOR THE ACCURACY OR COMPLETENESS OF SCANNED COPIES OF THIS PLAN SHEET.*

## LEGEND:

ROADWAY EXCAVATION

ROCK SLOPE PROTECTION

## ABBREVIATION:

ROE - RIGHT OF ENTRY

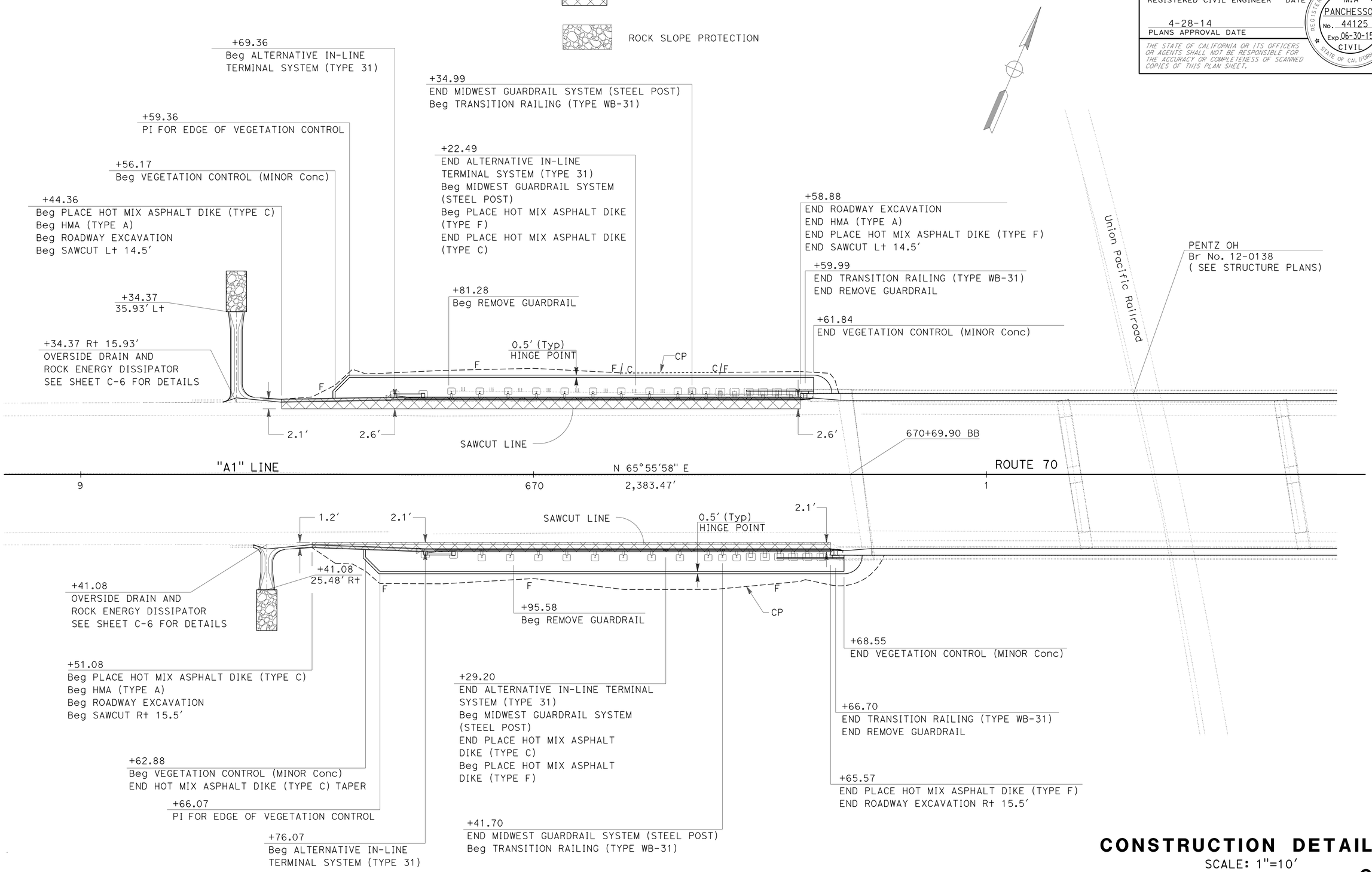


# CONSTRUCTION DETAILS

SCALE: 1"=10'

C-1

| REVISED BY | DATE REVISED |
|---|---|
| DAVID ROBERTS | MIKE PANCHESSON |
| CALCULATED-DESIGNED BY | CHECKED BY |
| FUNCTIONAL SUPERVISOR | ALI KIANI |

STATE OF CALIFORNIA - DEPARTMENT OF TRANSPORTATION

DESIGN

LAST REVISION 03-08-14 | DATE PLOTTED => 08-MAY-2014 14:04

| Dist | COUNTY | ROUTE | POST MILES TOTAL PROJECT | SHEET No. | TOTAL SHEETS |
|---|---|---|---|---|---|
| 03 | But | 70 | 26.7/27.1 | 6 | 83 |

M. A. Panchesson 4-28-14
REGISTERED CIVIL ENGINEER DATE

4-28-14
PLANS APPROVAL DATE

REGISTERED PROFESSIONAL ENGINEER M.A PANCHESSON No. 44125 Exp.06-30-15 CIVIL STATE OF CALIFORNIA

*THE STATE OF CALIFORNIA OR ITS OFFICERS OR AGENTS SHALL NOT BE RESPONSIBLE FOR THE ACCURACY OR COMPLETENESS OF SCANNED COPIES OF THIS PLAN SHEET.*

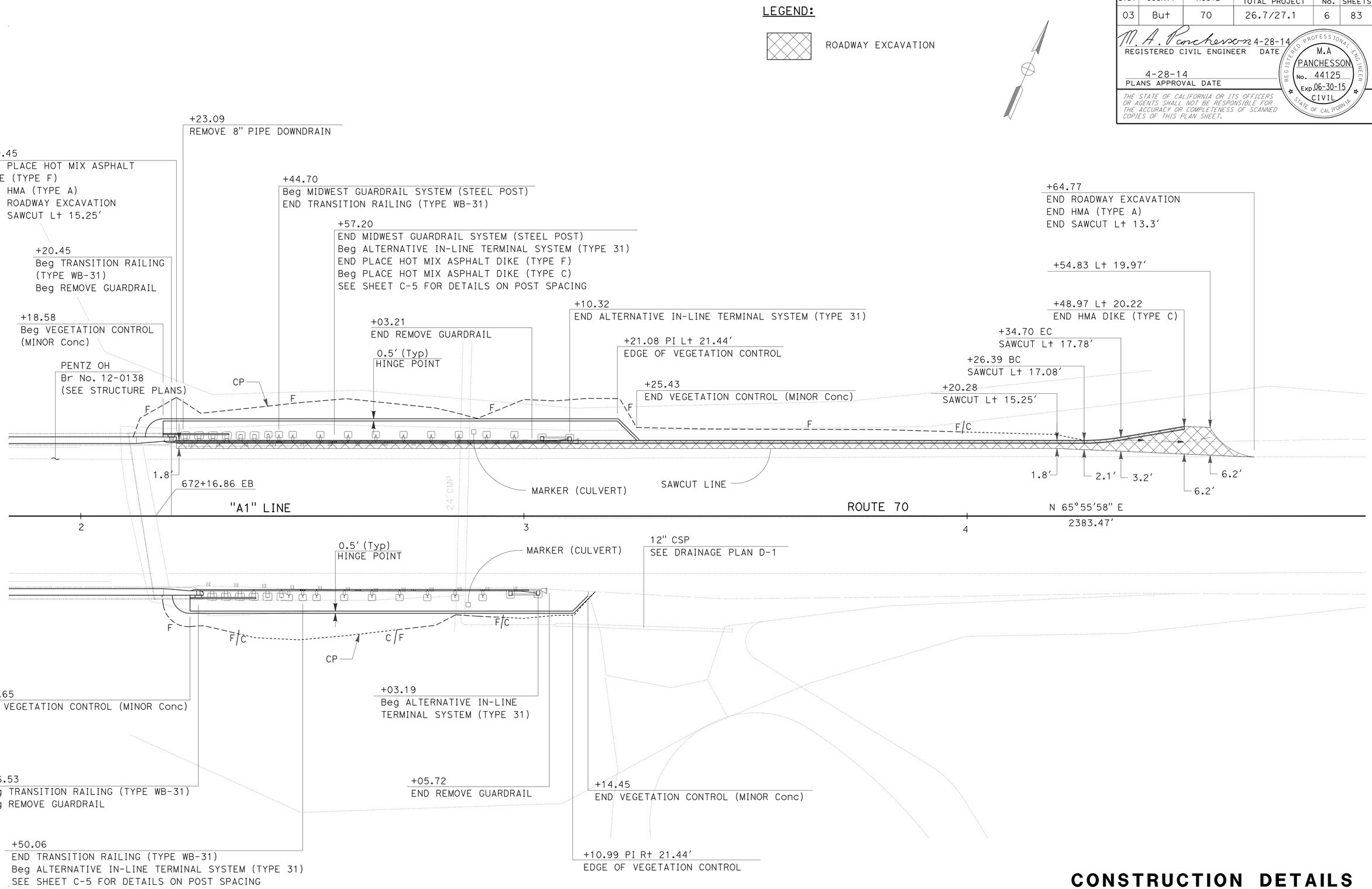


# CONSTRUCTION DETAILS

SCALE: 1"=10'

C-2

| REVISED BY | DATE REVISED |
|---|---|
| | |

DAVID ROBERTS — M A. PANCHESSON — CALCULATED-DESIGNED BY — CHECKED BY

FUNCTIONAL SUPERVISOR: ALI KIANI

STATE OF CALIFORNIA - DEPARTMENT OF TRANSPORTATION — DESIGN — Caltrans

LAST REVISION 03-08-14 — DATE PLOTTED => 08-MAY-2014 14:04

| Dist | COUNTY | ROUTE | POST MILES TOTAL PROJECT | SHEET No. | TOTAL SHEETS |
|---|---|---|---|---|---|
| 03 | But | 70 | 26.7/27.1 | 7 | 83 |

M. A. Panchesson 4-28-14
REGISTERED CIVIL ENGINEER DATE

4-28-14
PLANS APPROVAL DATE

REGISTERED PROFESSIONAL ENGINEER M.A PANCHESSON No. 44125 Exp.06-30-15 CIVIL STATE OF CALIFORNIA

*THE STATE OF CALIFORNIA OR ITS OFFICERS OR AGENTS SHALL NOT BE RESPONSIBLE FOR THE ACCURACY OR COMPLETENESS OF SCANNED COPIES OF THIS PLAN SHEET.*

**LEGEND:**

ROADWAY EXCAVATION

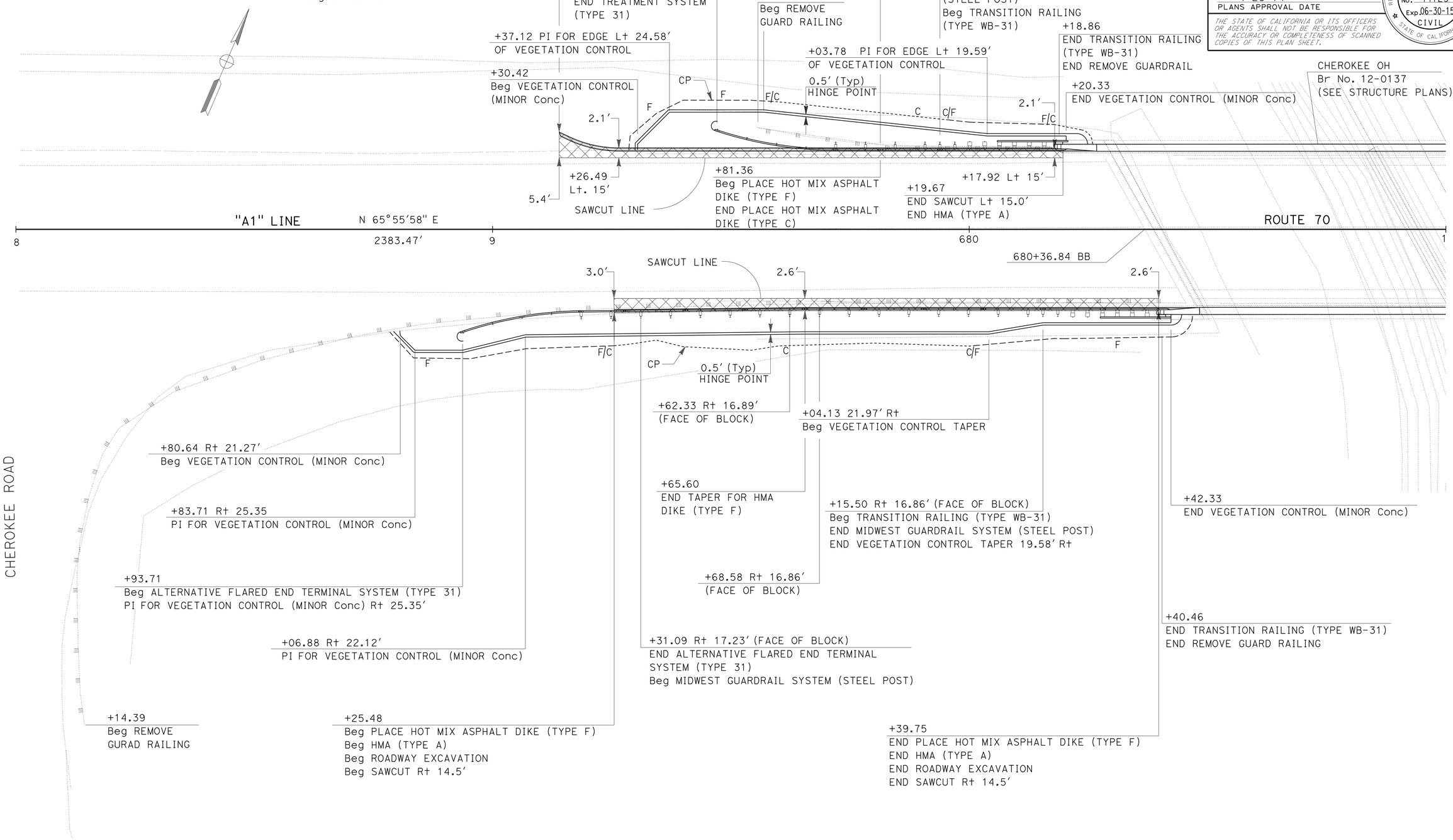


# CONSTRUCTION DETAILS

SCALE: 1"=10′

**C-3**

REVISED BY | DATE REVISED
DAVID ROBERTS | MIKE PANCHESSON
CALCULATED-DESIGNED BY | CHECKED BY
FUNCTIONAL SUPERVISOR
ALI KIANI

STATE OF CALIFORNIA - DEPARTMENT OF TRANSPORTATION
Caltrans
DESIGN

LAST REVISION 03-08-14 | DATE PLOTTED => 08-MAY-2014 14:04

| Dist | COUNTY | ROUTE | POST MILES TOTAL PROJECT | SHEET No. | TOTAL SHEETS |
|---|---|---|---|---|---|
| 03 | But | 70 | 26.7/27.1 | 8 | 83 |

M. A. Panchesson 4-28-14
REGISTERED CIVIL ENGINEER DATE

4-28-14
PLANS APPROVAL DATE

REGISTERED PROFESSIONAL ENGINEER M.A PANCHESSON No. 44125 Exp 06-30-15 CIVIL STATE OF CALIFORNIA

*THE STATE OF CALIFORNIA OR ITS OFFICERS OR AGENTS SHALL NOT BE RESPONSIBLE FOR THE ACCURACY OR COMPLETENESS OF SCANNED COPIES OF THIS PLAN SHEET.*

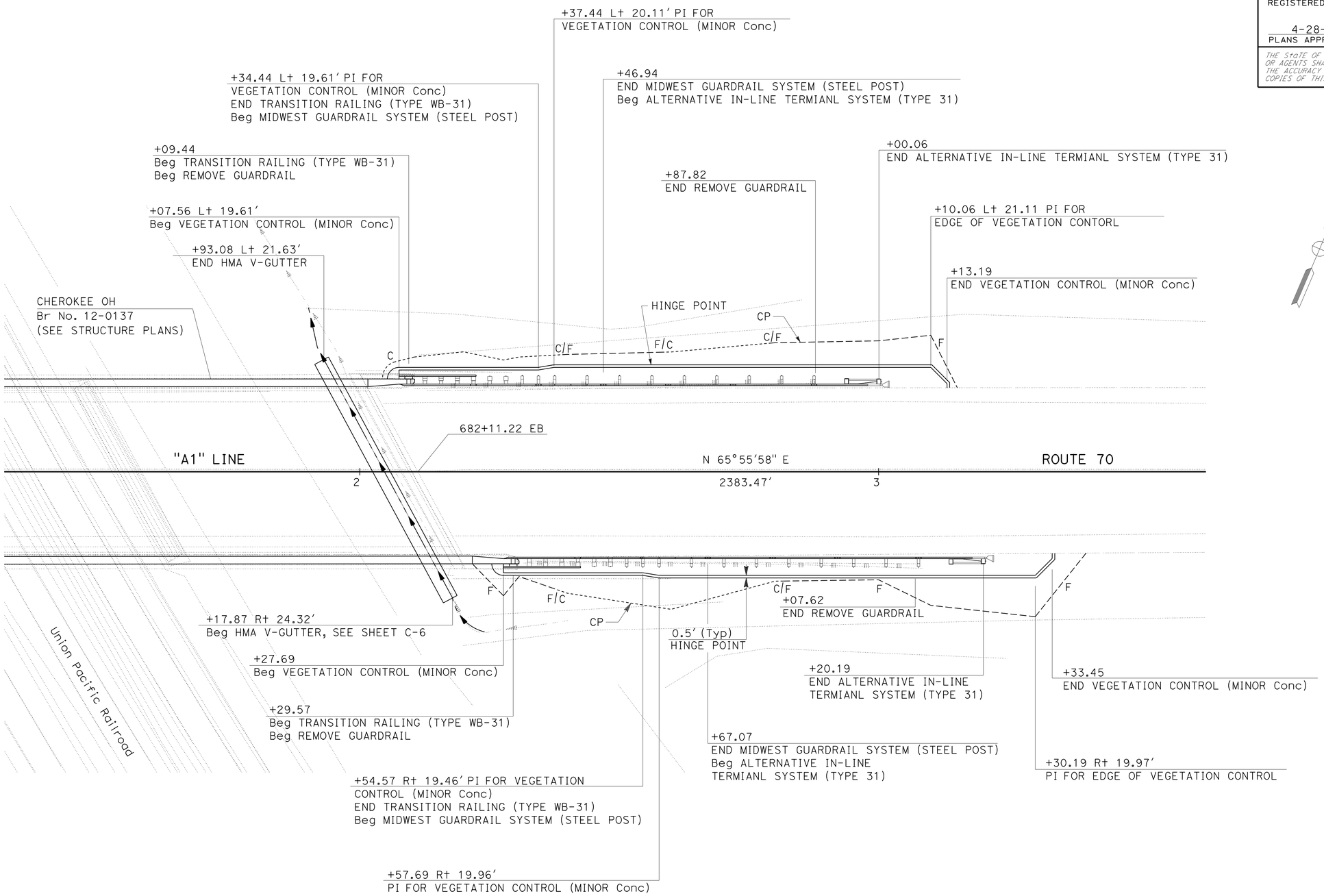


# CONSTRUCTION DETAILS

SCALE: 1"=10'

C-4

REVISED BY | DATE REVISED
DAVID ROBERTS | MIKE PANCHESSON
CALCULATED-DESIGNED BY | CHECKED BY
FUNCTIONAL SUPERVISOR
ALI KIANI

STATE OF CALIFORNIA - DEPARTMENT OF TRANSPORTATION
Caltrans
DESIGN

LAST REVISION 03-08-14
DATE PLOTTED => 08-MAY-2014 14:04

| Dist | COUNTY | ROUTE | POST MILES TOTAL PROJECT | SHEET No. | TOTAL SHEETS |
|---|---|---|---|---|---|
| 03 | But | 70 | 26.7/27.1 | 9 | 83 |

M. A. Panchesson 4-28-14
REGISTERED CIVIL ENGINEER DATE

4-28-14
PLANS APPROVAL DATE

REGISTERED PROFESSIONAL ENGINEER M.A PANCHESSON No. 44125 Exp. 06-30-15 CIVIL STATE OF CALIFORNIA

*THE STATE OF CALIFORNIA OR ITS OFFICERS OR AGENTS SHALL NOT BE RESPONSIBLE FOR THE ACCURACY OR COMPLETENESS OF SCANNED COPIES OF THIS PLAN SHEET.*

NOTE:

1. SEE REVISED STANDARD PLAN RSP A77U4 FOR ALL OTHER DETAILS

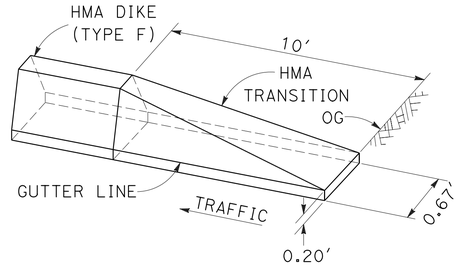


## HMA DIKE (TYPE F) APPROACH TRANSITION

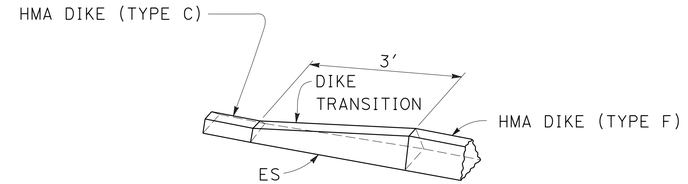


TYPE C

## HMA DIKE (TYPE C) TO HMA DIKE (TYPE F)

TYPE F

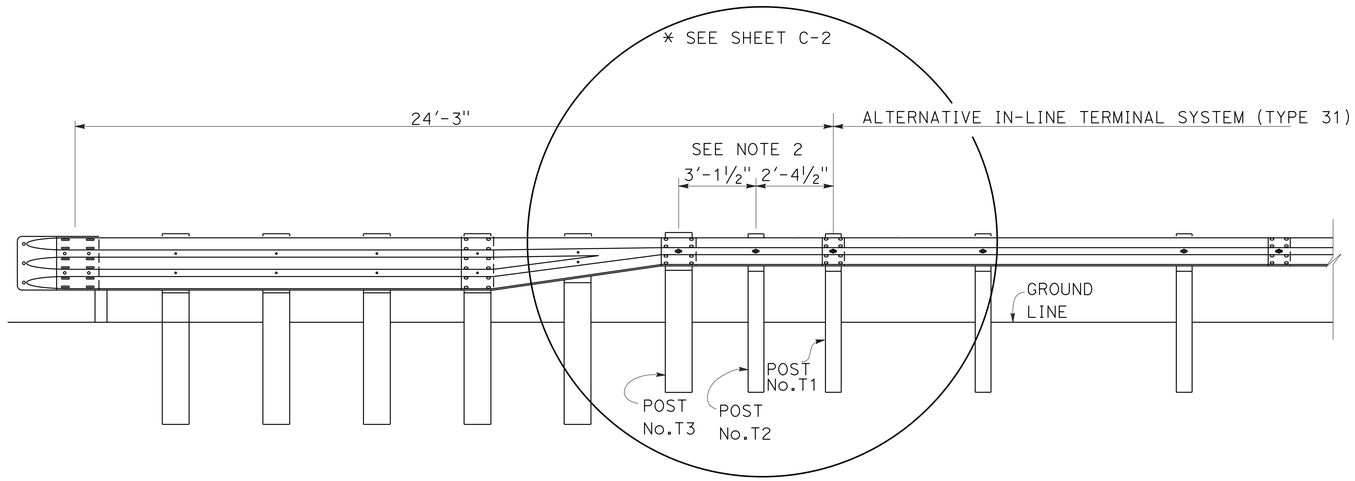


### WESTBOUND APPROACH AT PENTZ OH

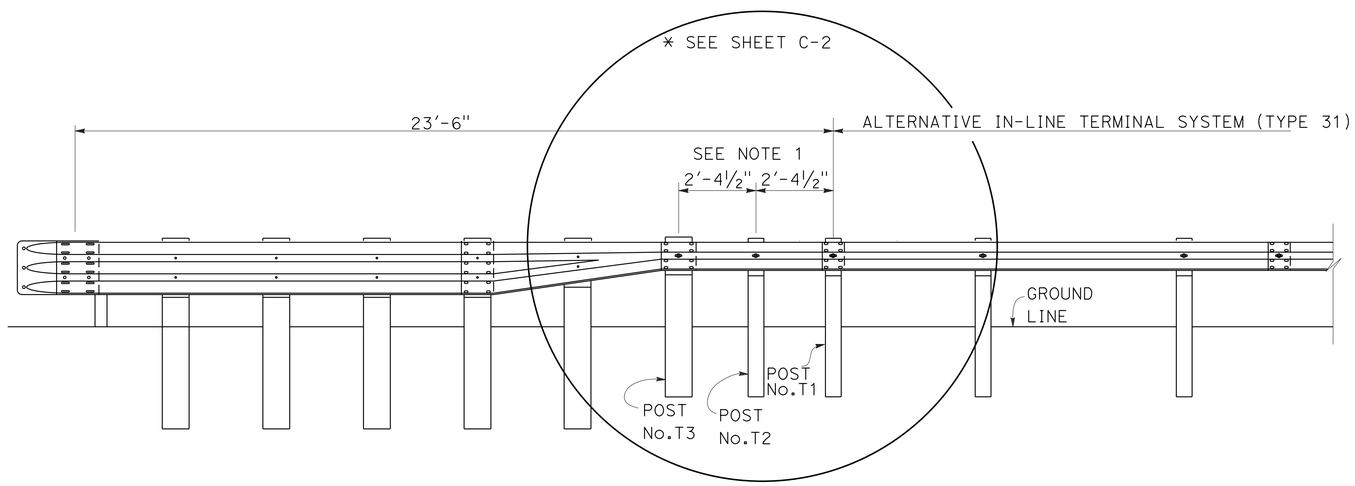


### EASTBOUND DEPARTURE AT PENTZ OH

## MODIFIED POST SPACING DETAIL FOR TRANSITION RAILING (TYPE WB-31)

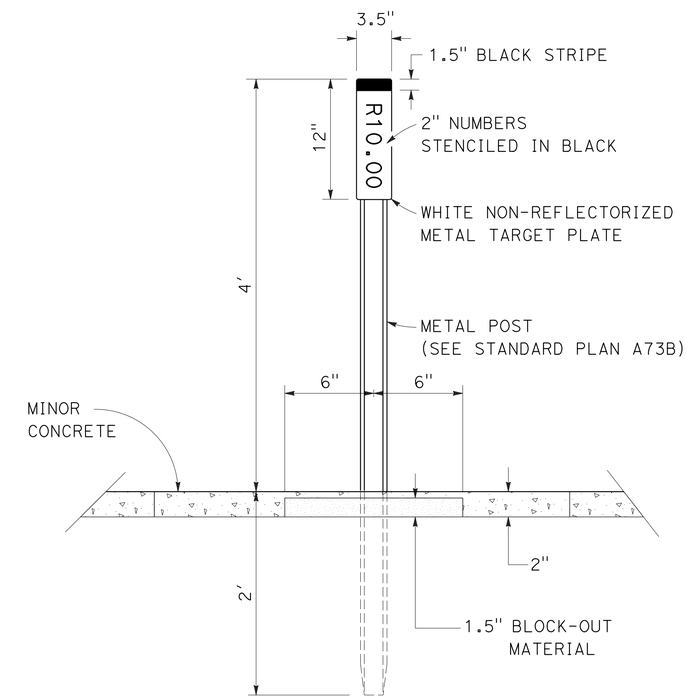


## MARKER (CULVERT)

MARKER NOTES:

1. CONTRACTOR SHALL FIELD VERIFY POSTMILE WITH ENGINEER'S APPROVAL PRIOR TO ORDERING AND PLACING METAL TARGET PLATES.
2. EXACT LOCATIONS TO BE DETERMINED BY THE ENGINEER.
3. IF CULVERT MARKER IS TO BE PLACED WITHIN THE VEGETATION CONTROL (MINOR Conc), A 1'X1' BLOCKOUT MUST BE BE USED.

## CONSTRUCTION DETAILS

NO SCALE

C-5

REVISED BY | DATE REVISED
DAVID ROBERTS | MIKE PANCHESSON
CALCULATED-DESIGNED BY | CHECKED BY
FUNCTIONAL SUPERVISOR
ALI KIANI

STATE OF CALIFORNIA - DEPARTMENT OF TRANSPORTATION
Caltrans
DESIGN

LAST REVISION 03-08-14 | DATE PLOTTED => 08-MAY-2014 14:04

| Dist | COUNTY | ROUTE | POST MILES TOTAL PROJECT | SHEET No. | TOTAL SHEETS |
|---|---|---|---|---|---|
| 03 | But | 70 | 26.7/27.1 | 10 | 83 |

M. A. Panchesson 4-28-14
REGISTERED CIVIL ENGINEER DATE

4-28-14
PLANS APPROVAL DATE

REGISTERED PROFESSIONAL ENGINEER M.A PANCHESSON No. 44125 Exp. 06-30-15 CIVIL STATE OF CALIFORNIA

*THE STATE OF CALIFORNIA OR ITS OFFICERS OR AGENTS SHALL NOT BE RESPONSIBLE FOR THE ACCURACY OR COMPLETENESS OF SCANNED COPIES OF THIS PLAN SHEET.*

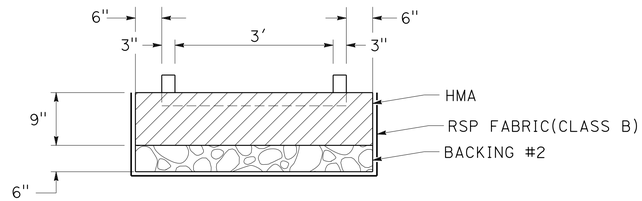


**ROCK ENERGY DISSIPATOR CROSS-SECTIONAL VIEW "B"-"B"**

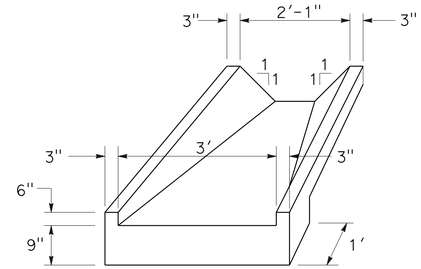


**HMA TAPER CROSS-SECTIONAL VIEW "A"-"A"**

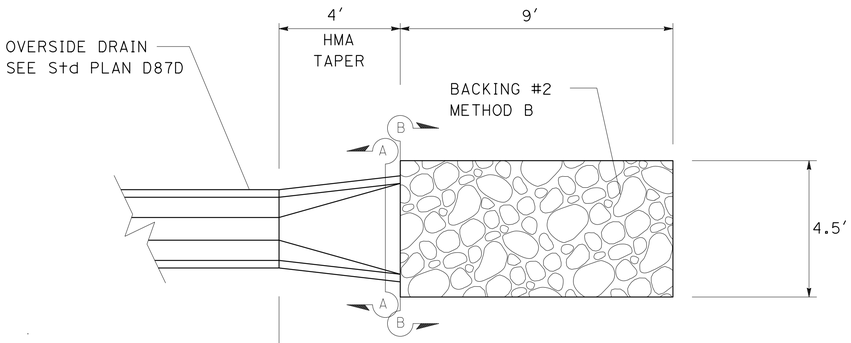


**ROCK ENERGY DISSIPATOR PLAN VIEW**

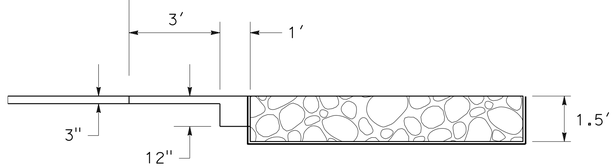


**ROCK ENERGY DISSIPATOR PROFILE VIEW**

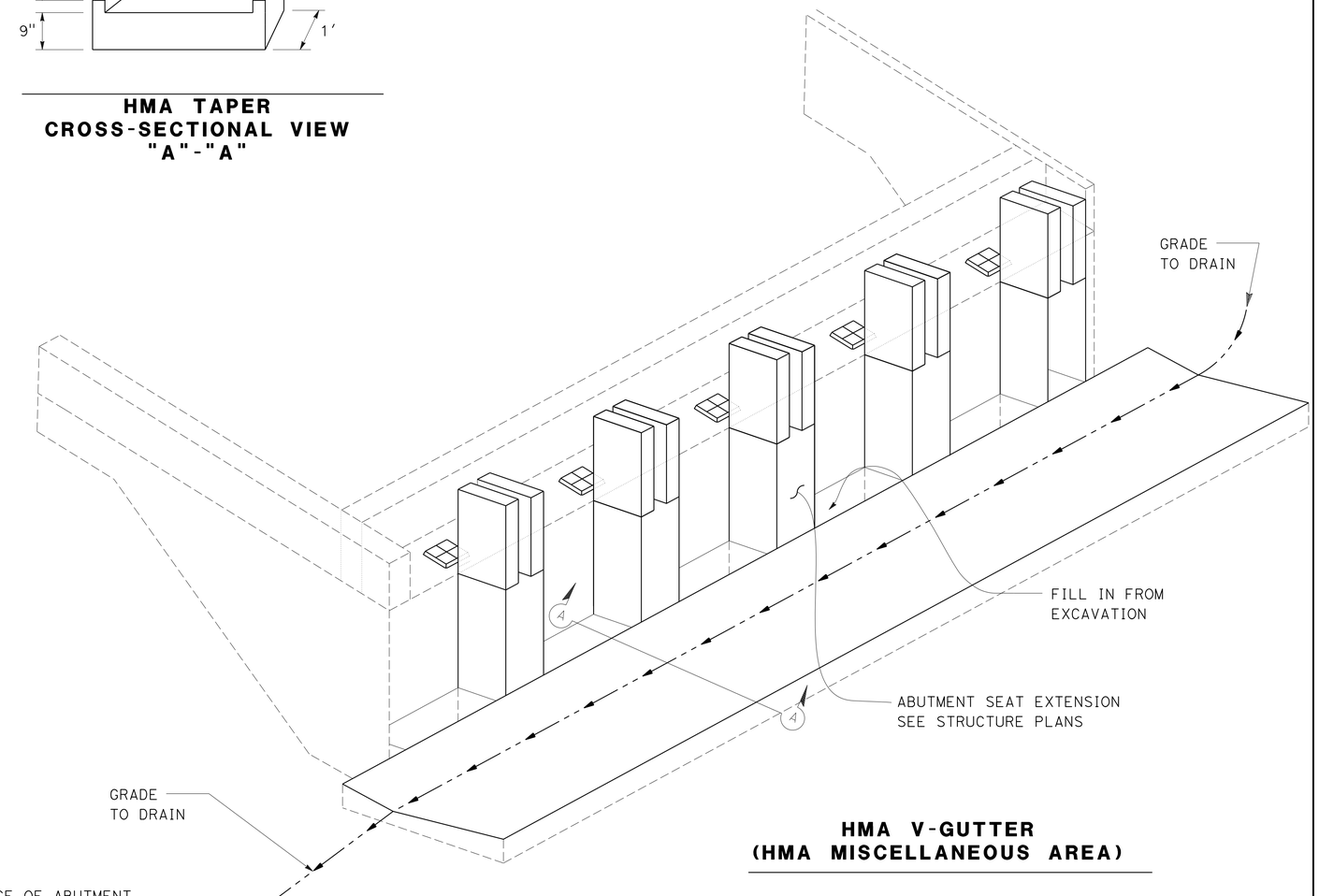


**HMA V-GUTTER (HMA MISCELLANEOUS AREA)**

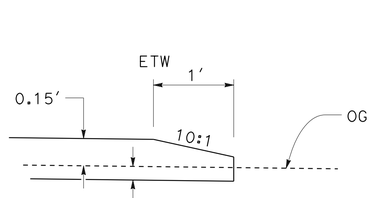


**EDGE TAPER**

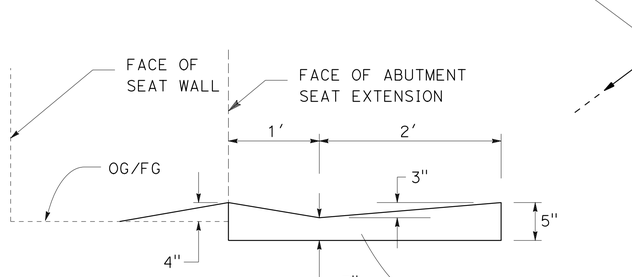


**TYPICAL SECTION "A" - "A" HMA (MISCELLANEOUS AREA)**

**HMA V-GUTTER**

| LOCATION | PLACE HOT MIX ASPHALT (MISCELLANEOUS AREA) |
|---|---|
| "A1" 681+93.08 L+ 21.63' | |
| "A1" 682+17.87 R+ 24.32' | SQYD |
| TOTAL | 17.40 |

* QUANTITY INCLUDED IN PAVEMENT QUANTITIES ON SHEET Q-1

# CONSTRUCTION DETAILs

NO SCALE

C-6

STATE OF CALIFORNIA - DEPARTMENT OF TRANSPORTATION
Caltrans® DESIGN
FUNCTIONAL SUPERVISOR: ALI KIANI
CALCULATED-DESIGNED BY: DAVID ROBERTS
CHECKED BY: MIKE PANCHESSON
REVISED BY
DATE REVISED

LAST REVISION 03-08-14
DATE PLOTTED => 08-MAY-2014
TIME PLOTTED => 14:04

| Dist | COUNTY | ROUTE | POST MILES TOTAL PROJECT | SHEET No. | TOTAL SHEETS |
|---|---|---|---|---|---|
| 03 | But | 70 | 26.7/27.1 | 11 | 83 |

M. A. Panchesson 4-28-14
REGISTERED CIVIL ENGINEER DATE

4-28-14
PLANS APPROVAL DATE

REGISTERED PROFESSIONAL ENGINEER M.A PANCHESSON No. 44125 Exp 06-30-15 CIVIL STATE OF CALIFORNIA

*THE STATE OF CALIFORNIA OR ITS OFFICERS OR AGENTS SHALL NOT BE RESPONSIBLE FOR THE ACCURACY OR COMPLETENESS OF SCANNED COPIES OF THIS PLAN SHEET.*

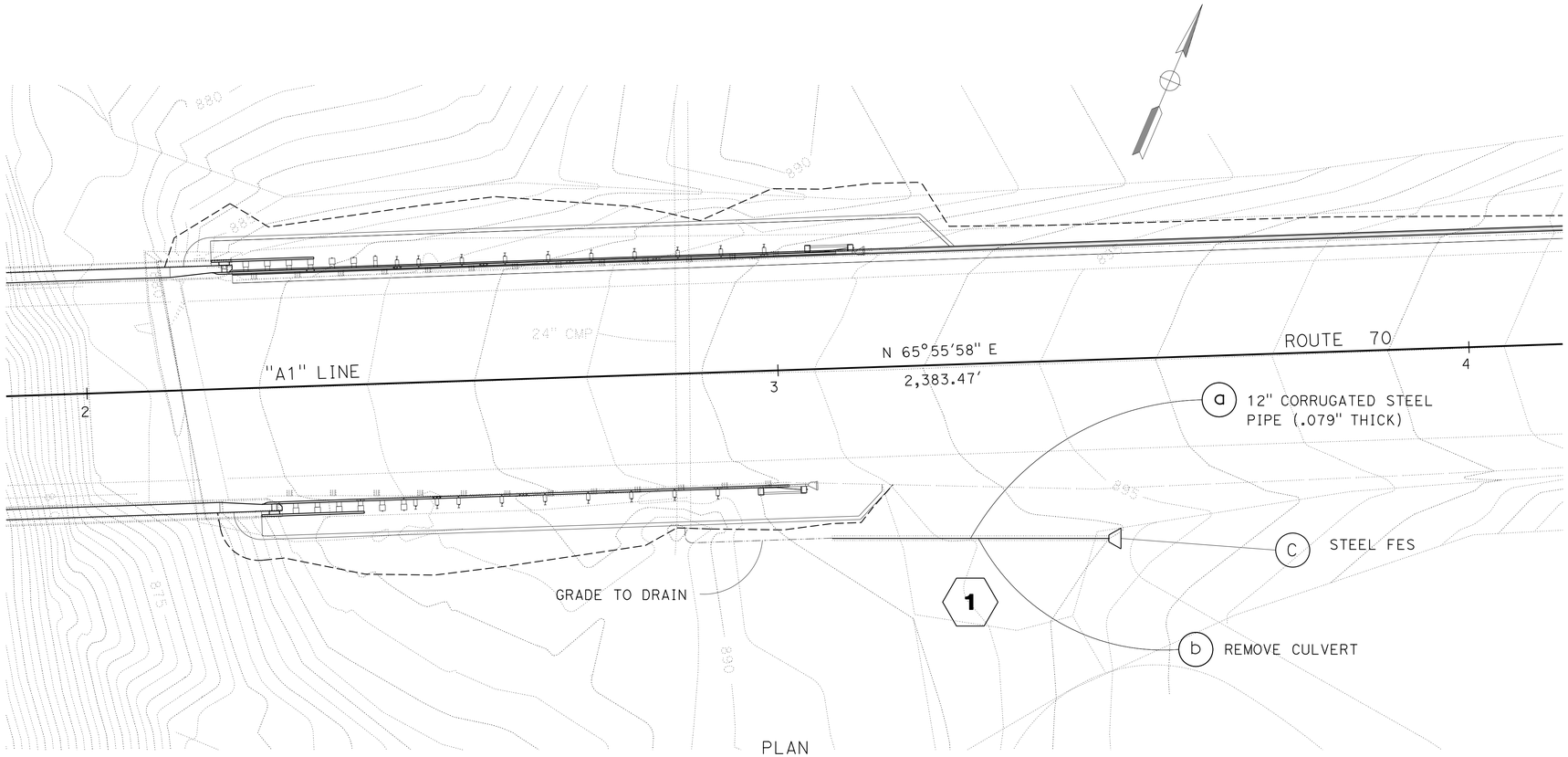


PLAN
SCALE: Horiz 1"=20'

## DRAINAGE QUANTITIES

| DRAINAGE SYSTEM No. ⬡ | DRAINAGE UNIT ◯ | 12" CSP (.079" THICK) | REMOVE CULVERT | 12" STEEL FES | DITCH EXCAVATION | DESCRIPTION |
|---|---|---|---|---|---|---|
| | | LF | EA | EA | CY | |
| 1 | a | 40 | | | | 12" CORRUGATED STEEL PIPE (.079" THICK) |
| | b | | 1 | | | 8"X 30' CMP CULVERT |
| | c | | | 1 | | 12" STEEL FLARED END SECTION |
| | | | | | 7 | GRADE TO DRAIN (DITCH EXCAVATION) |
| | | | | | | |
| TOTAL | | 40 | 1 | 1 | 7 | |

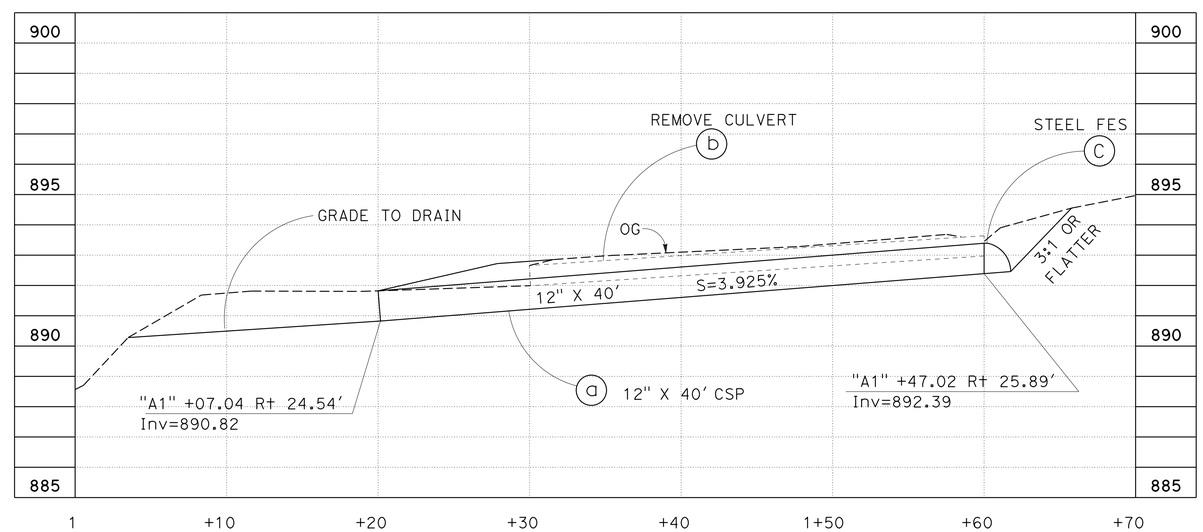


## DRAINAGE SYSTEM No. 1

"A1" 673+07.04 24.54' Rt TO "A1" 673+47.02 25.89' Rt

SCALE: Horiz 1"=20'
Vert 1"=20'

# DRAINAGE PLAN, PROFILE AND QUANTITIES

SCALE AS SHOWN **D-1**

*APPROVED FOR DRAINAGE WORK ONLY*

STATE OF CALIFORNIA - DEPARTMENT OF TRANSPORTATION
DESIGN
Caltrans

FUNCTIONAL SUPERVISOR: ALI KIANI
CALCULATED-DESIGNED BY: DAVID ROBERTS
CHECKED BY: MIKE PANCHESSON
REVISED BY
DATE REVISED

LAST REVISION 03-09-14
DATE PLOTTED => 08-MAY-2014
TIME PLOTTED => 14:04

| Dist | COUNTY | ROUTE | POST MILES TOTAL PROJECT | SHEET No. | TOTAL SHEETS |
|---|---|---|---|---|---|
| 03 | But | 70 | 26.7/27.1 | 12 | 83 |

Kris M. Albers 4-28-14
REGISTERED CIVIL ENGINEER DATE

4-28-14
PLANS APPROVAL DATE

REGISTERED PROFESSIONAL ENGINEER
KRIS M. ALBERS
No. 49986
Exp. 6-30-15
CIVIL
STATE OF CALIFORNIA

*THE STATE OF CALIFORNIA OR ITS OFFICERS OR AGENTS SHALL NOT BE RESPONSIBLE FOR THE ACCURACY OR COMPLETENESS OF SCANNED COPIES OF THIS PLAN SHEET.*

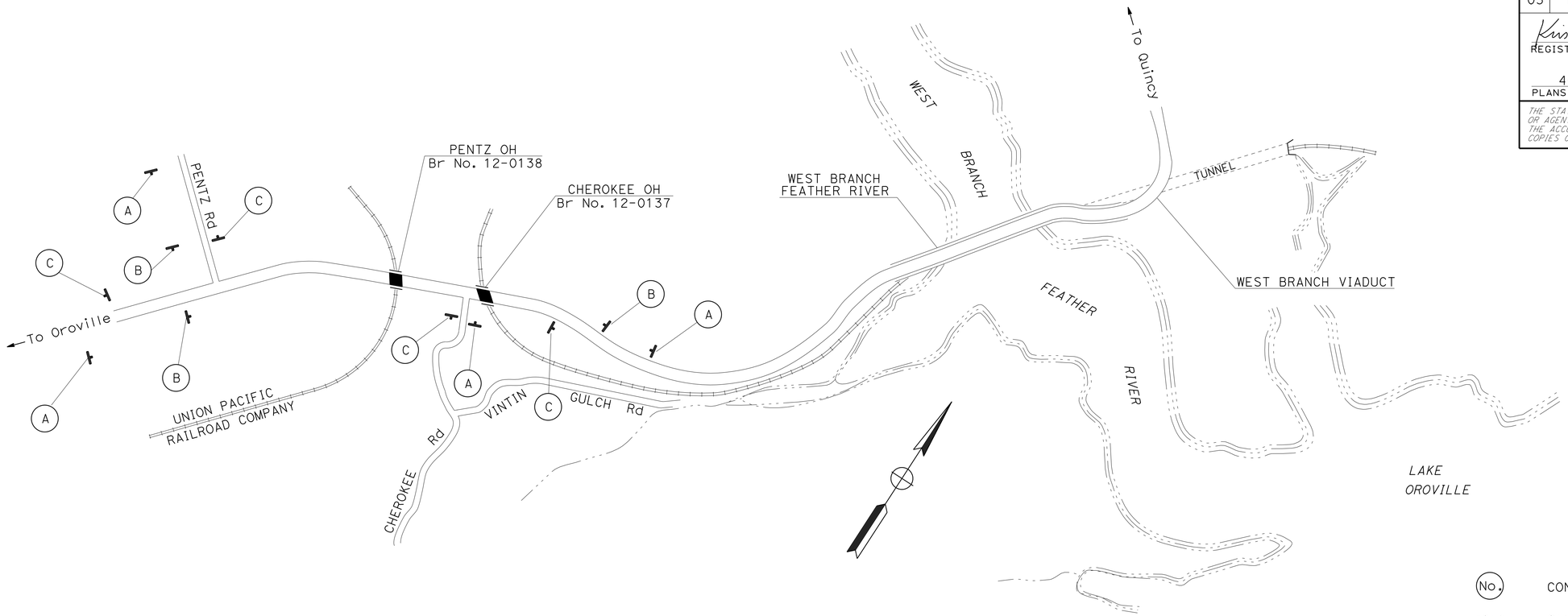


## LEGEND

(No.) CONSTRUCTION AREA SIGN LETTER

<CA> CALIFORNIA SIGN CODE

## SIGN DETAILS

(B) C40(Mod)<CA>

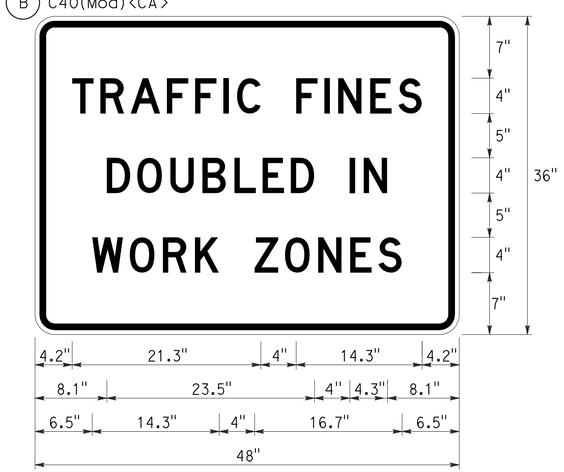


¾" BORDER WITH 2¼" RADIUS and ½" INDENT

RETROREFLECTIVE WHITE BACKGROUND
WITH BLACK LEGEND AND BORDER

"TRAFFIC FINES" D
"DOUBLED IN" D
"WORK ZONES" D

## STATIONARY MOUNTED CONSTRUCTION AREA SIGNS

| SIGN LETTER | SIGN CODE | | PANEL SIZE | SIGN MESSAGE | NUMBER OF POST AND SIZE | NUMBER OF SIGNS |
|---|---|---|---|---|---|---|
| | FEDERAL | CALIFORNIA | | | | |
| A | W20-1 | C23 | 48" x 48" | ROAD WORK AHEAD | 1 - 6" x 6" | 4 |
| B | | C40(Mod) | 48" x 36" | TRAFFIC FINES DOUBLED IN WORK ZONES | 1 - 4" x 6" | 3 |
| C | G20-2 | C14 | 36" x 18" | END ROAD WORK | 1 - 4" x 4" | 4 |

NOTES:

1. EXACT SIGN LOCATION TO BE DETERMINED BY THE ENGINEER.
2. FOR ADDITIONAL CONSTRUCTION AREA SIGNS, SEE TRAFFIC HANDLING PLANS.

# CONSTRUCTION AREA SIGNS

NO SCALE

CS-1

*APPROVED FOR CONSTRUCTION AREA SIGN WORK ONLY*

REVISED BY | DATE REVISED
JACK KEMMERLY | K. ALBERS
CALCULATED-DESIGNED BY | CHECKED BY
FUNCTIONAL SUPERVISOR: SERGIO ACEVES
STATE OF CALIFORNIA - DEPARTMENT OF TRANSPORTATION
TRAFFIC
Caltrans

LAST REVISION 1-22-14 | DATE PLOTTED => 08-MAY-2014 | TIME PLOTTED => 14:04

| Dist | COUNTY | ROUTE | POST MILES TOTAL PROJECT | SHEET No. | TOTAL SHEETS |
|---|---|---|---|---|---|
| 03 | But | 70 | 26.7/27.1 | 13 | 83 |

M. A. Panchesson 4-28-14
REGISTERED CIVIL ENGINEER DATE

4-28-14
PLANS APPROVAL DATE

REGISTERED PROFESSIONAL ENGINEER M.A PANCHESSON No. 44125 Exp. 06-30-15 CIVIL STATE OF CALIFORNIA

*THE STATE OF CALIFORNIA OR ITS OFFICERS OR AGENTS SHALL NOT BE RESPONSIBLE FOR THE ACCURACY OR COMPLETENESS OF SCANNED COPIES OF THIS PLAN SHEET.*

## NOTES:

### STAGE 1

1. WORK UNDER ONE-WAY TRAFFIC CONTROL, REMOVE AC SURFACING, SEE STRUCTURE PLANS, COLD PLANE AC Pvmt EASTBOUND LANE (INCLUDE CENTERLINE STRIPE AND ETW STRIPE), REMOVE OLD BRIDGE RAIL, PLACE HMA (TYPE A) ON EASTBOUND LANE, AND PLACE Temp CONFORM TAPER ON EITHER SIDE OF BRIDGE.
2. PLACE TEMPORARY RAILING (TYPE K), PLACE TEMPORARY CRASH CUSHIONS, AND RESTRIPE AS SHOWN ON THE TRAFFIC HANDLING PLANS.
3. STAGE 1 BRIDGE STRUCTURE CONSTRUCTION PENTZ & CHEROKEE OH'S: BEGIN SEISMIC UPGRADES, INSTALL Conc BARRIER (TYPE 736 MODIFIED), AND CHAIN LINK RAILING (TYPE 7 MODIFIED), SEE STRUCTURE PLANS.
4. ROADWAY EXCAVATION, SEE CONSTRUCTION DETAILS C-1, C-2, PLACE HMA (TYPE A), AND HOT MIX ASPHLAT CONCRETE DIKE.
5. INSTALL TRANSITION RAILING (TYPE WB-31), MIDWEST GUARDRAIL SYSTEM, ALTERNATIVE IN-LINE TERMINAL SYSTEM, CONSTRUCT VEGETATION CONTROL (MINOR Conc), AND CONSTRUCT HMA OVERSIDE DRAIN WITH ENERGY DISSIPATOR SEE CONSTRUCTION DETAILS C-6.
6. NO HMA (TYPE A) IS TO BE PLACED ON BRIDGE DECK.
7. FOR ACCURATE RIGHT OF WAY, CONTACT RIGHT OF WAY ENGINEERING AT DISTRIC OFFICE.

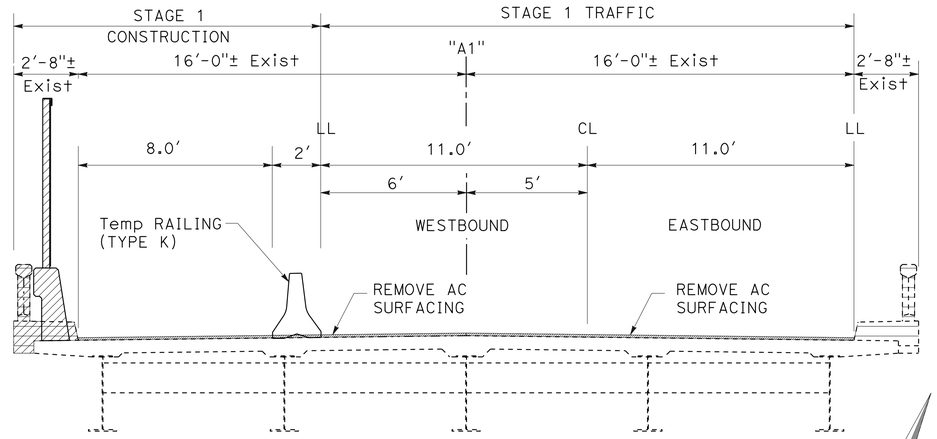


## TYPICAL SECTION

NO SCALE

Sta "A1" 670+69.90 Lt TO "A1" 672+16.86 Lt

## LEGEND:

CONSTRUCT THIS STAGE

ROADWAY EXCAVATION

## ABBREVIATION:

ROE - RIGHT OF ENTRY

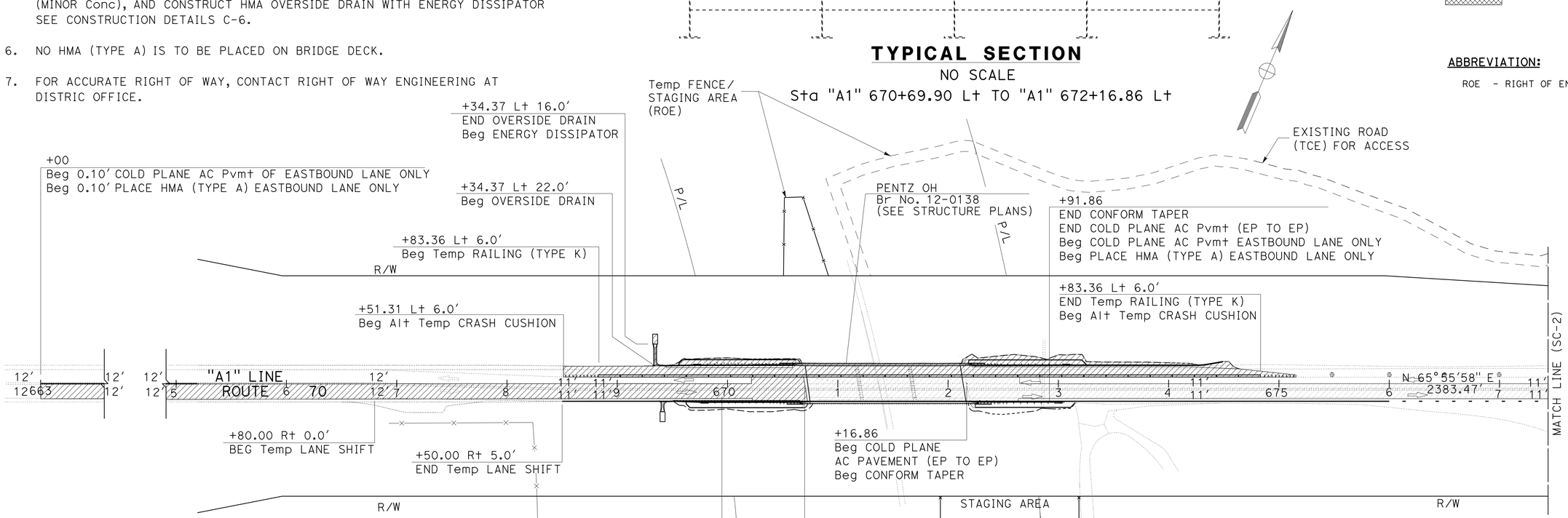


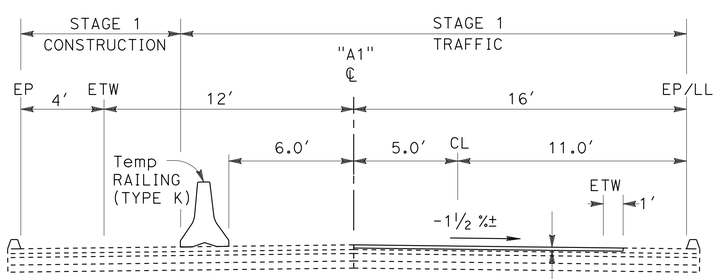


"A1" 663+00.00 TO "A1" 679+69.90
"A1" 672+16.86 TO "A1" 680+36.84
"A1" 682+11.22 TO "A1" 685+85.00

0.10 COLD PLANE AC Pvmt
PLACE 0.10' HMA (TYPE A)

## TYPICAL STAGE 1

COLD PLANE DETAIL

# STAGE CONSTRUCTION

## STAGE 1

SEGMENT 1: WESTBOUND SIDE PENTZ OH ROUTE 70

SCALE: 1" = 50'

**SC-1**

| REVISED BY | DATE REVISED |
|---|---|
| | |

| CALCULATED-DESIGNED BY | CHECKED BY |
|---|---|
| DAVID ROBERTS | M. PANCHESSON |

FUNCTIONAL SUPERVISOR: ALI KIANI

STATE OF CALIFORNIA - DEPARTMENT OF TRANSPORTATION

DESIGN

Caltrans

LAST REVISION 03-08-14 | DATE PLOTTED => 08-MAY-2014 | TIME PLOTTED => 14:04

| Dist | COUNTY | ROUTE | POST MILES TOTAL PROJECT | SHEET No. | TOTAL SHEETS |
|---|---|---|---|---|---|
| 03 | But | 70 | 26.7/27.1 | 14 | 83 |

M. A. Panchesson 4-28-14
REGISTERED CIVIL ENGINEER DATE

4-28-14
PLANS APPROVAL DATE

REGISTERED PROFESSIONAL ENGINEER M.A PANCHESSON No. 44125 Exp. 06-30-15 CIVIL STATE OF CALIFORNIA

*THE STATE OF CALIFORNIA OR ITS OFFICERS OR AGENTS SHALL NOT BE RESPONSIBLE FOR THE ACCURACY OR COMPLETENESS OF SCANNED COPIES OF THIS PLAN SHEET.*

## NOTES:

### STAGE 1

1. WORK UNDER ONE-WAY TRAFFIC CONTROL, REMOVE AC SURFACING' SEE STRUCTURE PLANS, COLD PLANE AC Pvmt EASTBOUND LANE (INCLUDE CENTERLINE STRIPE AND ETW STRIPE), REMOVE OLD BRIDGE RAIL, PLACE HMA (TYPE A) ON EASTBOUND LANE, AND PLACE Temp CONFORM TAPER ON EITHER SIDE OF BRIDGE.
2. PLACE TEMPORARY RAILING (TYPE K), PLACE TEMPORARY CRASH CUSHIONS, AND RESTRIPE AS SHOWN ON THE TRAFFIC HANDLING PLANS.
3. STAGE 1 BRIDGE STRUCTURE CONSTRUCTION PENTZ & CHEROKEE OH'S: BEGIN SEISMIC UPGRADES, INSTALL Conc BARRIER (TYPE 736 MODIFIED), AND CHAIN LINK RAILING (TYPE 7 MODIFIED), SEE STRUCTURE PLANS.
4. ROADWAY EXCAVATION, SEE CONSTRUCTION DETAILS C-3, PLACE HMA (TYPE A), PLACE HOT MIX ASPHLAT CONCRETE DIKE, AND PLACE MISCELLANEOUS HMA V-GUTTER UNDER CHEROKEE OH, SEE CONSTRUCTION DETAILS.
5. INSTALL TRANSITION RAILING (TYPE WB-31), MIDWEST GUARDRAIL SYSTEM, ALTERNATIVE IN-LINE TERMINAL SYSTEM, CONSTRUCT VEGETATION CONTROL (MINOR Conc), AND CONSTRUCT HMA OVERSIDE DRAIN WITH ENERGY DISSIPATOR SEE CONSTRUCTION DETAILS C-6.
6. NO HMA (TYPE A) IS TO BE PLACED ON BRIDGE DECK.
7. FOR ACCURATE RIGHT OF WAY, CONTACT RIGHT OF WAY ENGINEERING AT DISTRIC OFFICE.

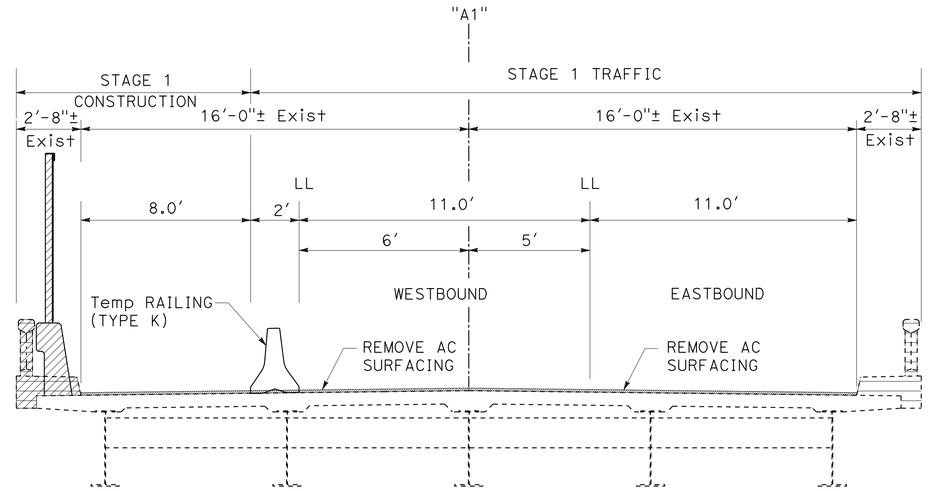


## TYPICAL SECTION

NO SCALE

"A1" 680+36.84 Lt TO "A1" 682+11.22 Lt

### LEGEND:

CONSTRUCT THIS STAGE

ROADWAY EXCAVATION

### ABBREVIATION:

ROE - RIGHT OF ENTRY

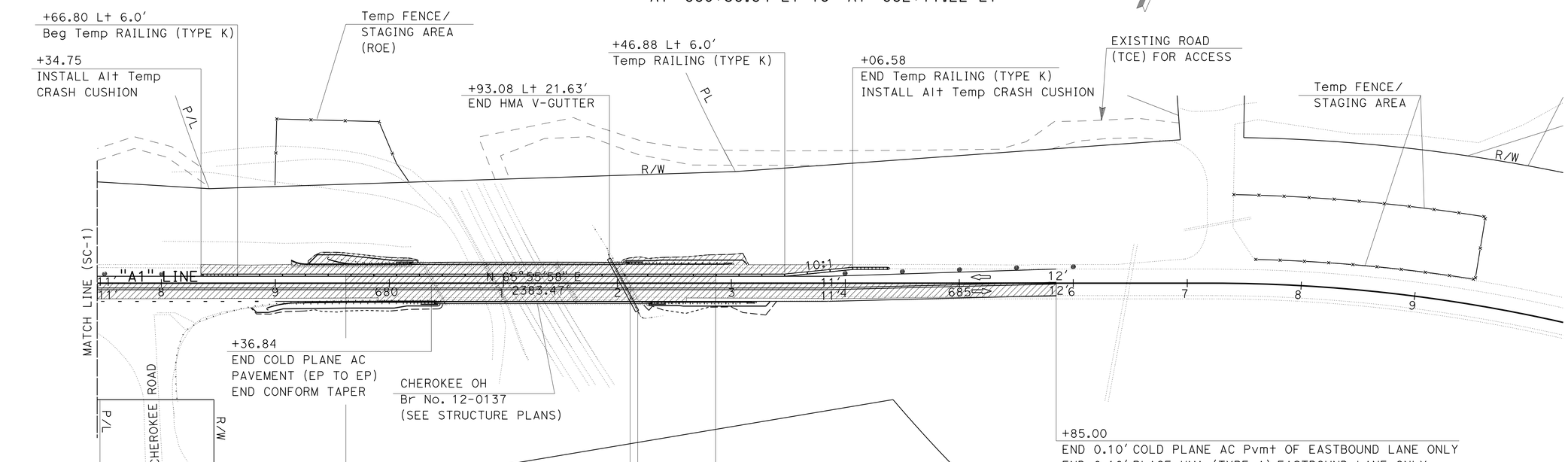


# STAGE CONSTRUCTION
## STAGE 1
SEGMENT 2: WESTBOUND SIDE CHEROKEE OH ROUTE 70

SCALE: 1" = 50'

**SC-2**

STATE OF CALIFORNIA - DEPARTMENT OF TRANSPORTATION
Caltrans
DESIGN

FUNCTIONAL SUPERVISOR: ALI KIANI
CALCULATED-DESIGNED BY: MIKE PANCHESSON
CHECKED BY: DAVID ROBERTS
REVISED BY
DATE REVISED

LAST REVISION 03-08-14
DATE PLOTTED => 08-MAY-2014
TIME PLOTTED => 14:04

| Dist | COUNTY | ROUTE | POST MILES TOTAL PROJECT | SHEET No. | TOTAL SHEETS |
|---|---|---|---|---|---|
| 03 | But | 70 | 26.7/27.1 | 15 | 83 |

M. A. Panchesson 4-28-14
REGISTERED CIVIL ENGINEER DATE

4-28-14
PLANS APPROVAL DATE

REGISTERED PROFESSIONAL ENGINEER M.A PANCHESSON No. 44125 Exp. 06-30-15 CIVIL STATE OF CALIFORNIA

*THE STATE OF CALIFORNIA OR ITS OFFICERS OR AGENTS SHALL NOT BE RESPONSIBLE FOR THE ACCURACY OR COMPLETENESS OF SCANNED COPIES OF THIS PLAN SHEET.*

## NOTES:

STAGE 2

1. WORK UNDER ONE-WAY TRAFFIC CONTROL, REMOVE OLD BRIDGE RAIL, AND PLACE Temp CONFORM TAPER ON EITHER SIDE OF BRIDGE.
2. REMOVE ALL STAGE 1 TRAFFIC CONTROL ELEMENTS, PLACE TEMPORARY RAILING (TYPE K), PLACE TEMPORARY CRASH CHUSIONS, AND RESTRIPE AS SHOWN ON TRAFFIC HANDLING PLANS.
3. STAGE 2 BRIDGE STRUCTURE CONSTRUCTION PENTZ & CHEROKEE OH'S: BEGIN SEISMIC UPGRADES, INSTALL Conc BARRIER (TYPE 736 MODIFIED), AND CHAIN LINK RAILING (TYPE 7 MODIFIED), SEE STRUCTURE PLANS.
4. ROADWAY EXCAVATION, SEE CONSTRUCTION DETAISL C-1,C-2, PLACE HMA-SP (TYPE A), AND HOT MIX ASPHLAT CONCRETE DIKE, REMOVE 10" DRIVEWAY CULVERT AND REPLACE WITH 12" CSP, INSTALL 12" FLARED END SECTION, SEE DRAINAGE PLAN.
5. INSTALL TRANSITION RAILING (TYPE WB-31), MIDWEST GUARDRAIL SYSTEM, ALTERNATIVE IN-LINE TERMINAL SYSTEM, CONSTRUCT VEGETATION CONTROL (MINOR Conc), AND CONSTRUCT HMA OVERSIDE DRAIN WITH ENERGY DISSIPATOR SEE CONSTRUCTION DETAILS.
6. NO HMA (TYPE A) IS TO BE PLACED ON BRIDGE DECK.
7. FOR ACCURATE RIGHT OF WAY, CONTACT RIGHT OF WAY ENGINEERING AT DISTRIC OFFICE.

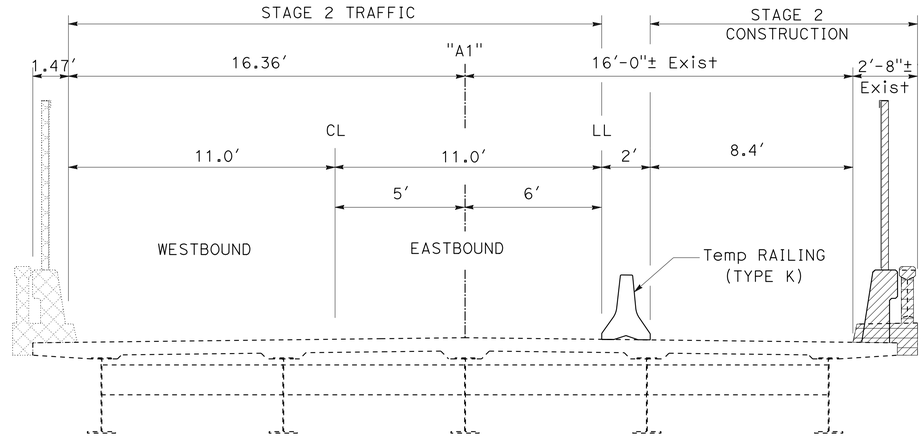


## TYPICAL SECTION

NO SCALE

"A1" 670+69.90 Rt TO "A1" 672+16.86 Rt

## LEGEND:

CONSTRUCT THIS STAGE

PREVIOUS STAGE WORK

ROADWAY EXCAVATION

## ABBREVIATION:

ROE - RIGHT OF ENTRY

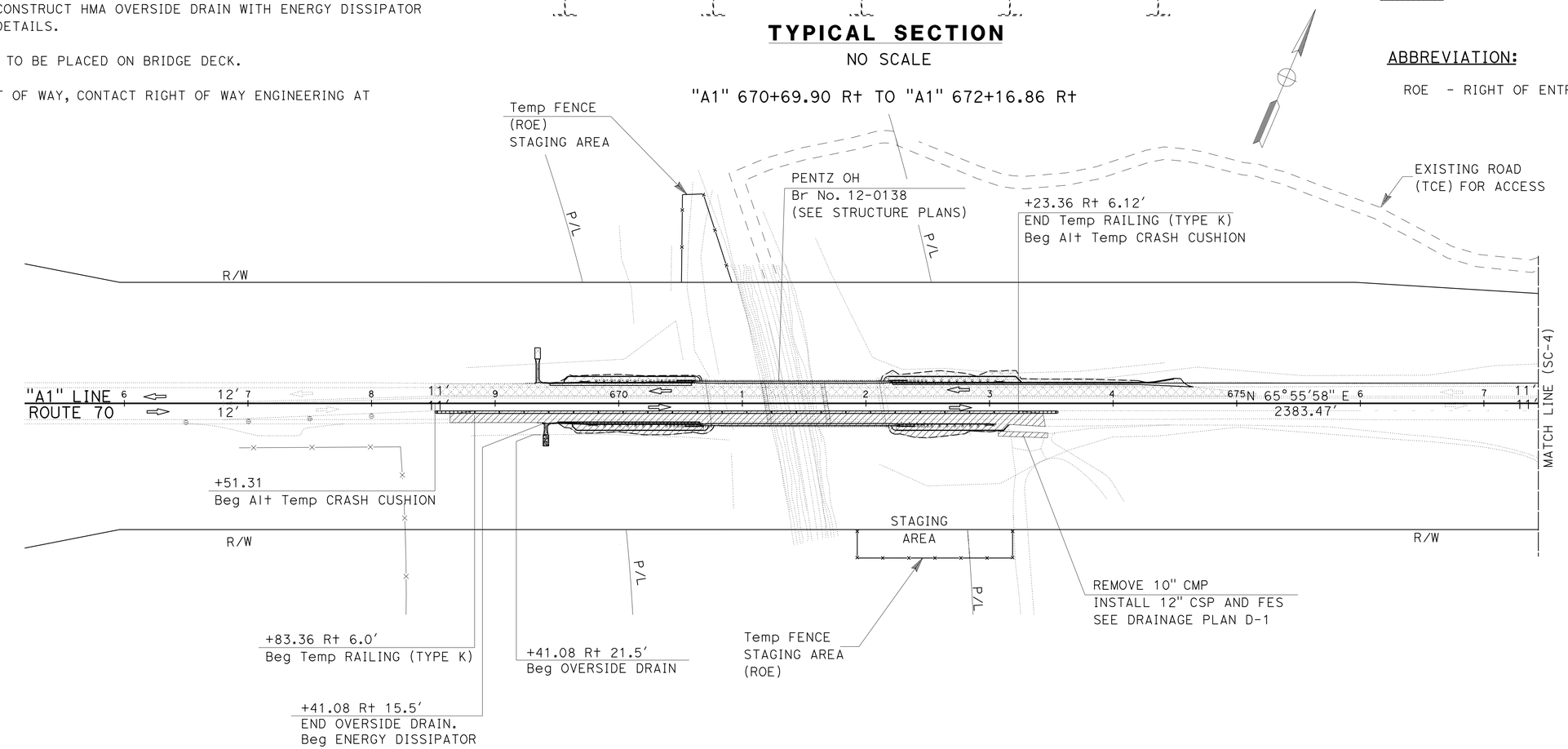


# STAGE CONSTRUCTION
## STAGE 2

SEGMENT 3: EASTBOUND SIDE PENTZ OH ROUTE 70

SCALE: 1" = 50'

**SC-3**

STATE OF CALIFORNIA - DEPARTMENT OF TRANSPORTATION
Caltrans® DESIGN

FUNCTIONAL SUPERVISOR: ALI KIANI
CALCULATED-DESIGNED BY: DAVID ROBERTS
CHECKED BY: MIKE PANCHESSON
REVISED BY
DATE REVISED

LAST REVISION 03-08-14
DATE PLOTTED => 08-MAY-2014
TIME PLOTTED => 14:04

| Dist | COUNTY | ROUTE | POST MILES TOTAL PROJECT | SHEET No. | TOTAL SHEETS |
|---|---|---|---|---|---|
| 03 | But | 70 | 26.7/27.1 | 16 | 83 |

M. A. Panchesson 4-28-14
REGISTERED CIVIL ENGINEER DATE

4-28-14
PLANS APPROVAL DATE

REGISTERED PROFESSIONAL ENGINEER M.A PANCHESSON No. 44125 Exp. 06-30-15 CIVIL STATE OF CALIFORNIA

*THE STATE OF CALIFORNIA OR ITS OFFICERS OR AGENTS SHALL NOT BE RESPONSIBLE FOR THE ACCURACY OR COMPLETENESS OF SCANNED COPIES OF THIS PLAN SHEET.*

## NOTES:

STAGE 2

1. WORK UNDER ONE-WAY TRAFFIC CONTROL, REMOVE OLD BRIDGE RAIL, AND PLACE Temp CONFORM TAPER ON EITHER SIDE OF BRIDGE.
2. REMOVE ALL STAGE 1 TRAFFIC CONTROL ELEMENTS, PLACE TEMPORARY RAILING (TYPE K), PLACE TEMPORARY CRASH CHUSIONS, AND RESTRIPE AS SHOWN ON TRAFFIC HANDLING PLANS.
3. STAGE 2 BRIDGE STRUCTURE CONSTRUCTION PENTZ & CHEROKEE OH'S: BEGIN SEISMIC UPGRADES, INSTALL Conc BARRIER (TYPE 736 MODIFIED), AND CHAIN LINK RAILING (TYPE 7 MODIFIED), SEE STRUCTURE PLANS.
4. ROADWAY EXCAVATION, SEE CONSTRUCTION DETAISL C-3, PLACE HMA (TYPE A), AND HOT MIX ASPHLAT CONCRETE DIKE.
5. INSTALL TRANSITION RAILING (TYPE WB-31), MIDWEST GUARDRAIL SYSTEM, ALTERNATIVE IN-LINE TERMINAL SYSTEM, AND CONSTRUCT VEGETATION CONTROL (MINOR Conc).
6. NO HMA (TYPE A) IS TO BE PLACED ON BRIDGE DECK.
7. FOR ACCURATE RIGHT OF WAY, CONTACT RIGHT OF WAY ENGINEERING AT DISTRIC OFFICE.

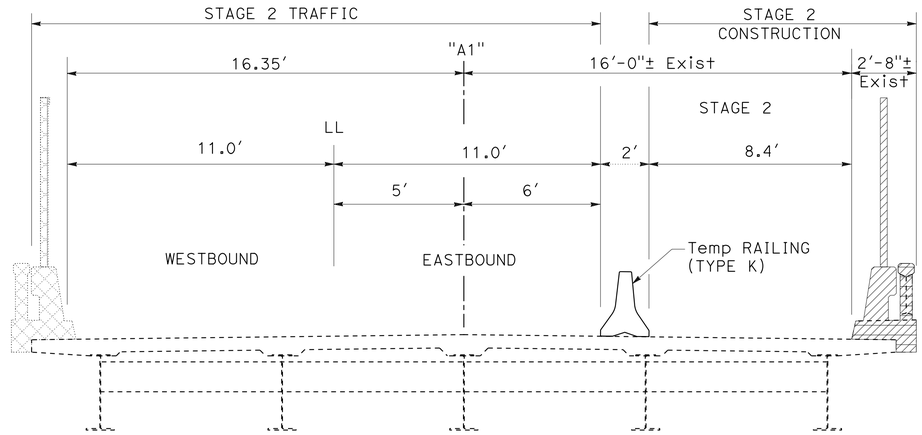


## TYPICAL SECTION

NO SCALE

"A1" 680+36.86 Rt TO "A1" 682+11.22 Rt

## LEGEND:

- CONSTRUCT THIS STAGE
- PREVIOUS STAGE WORK
- ROADWAY EXCAVATION

## ABBREVIATION:

ROE - RIGHT OF ENTRY

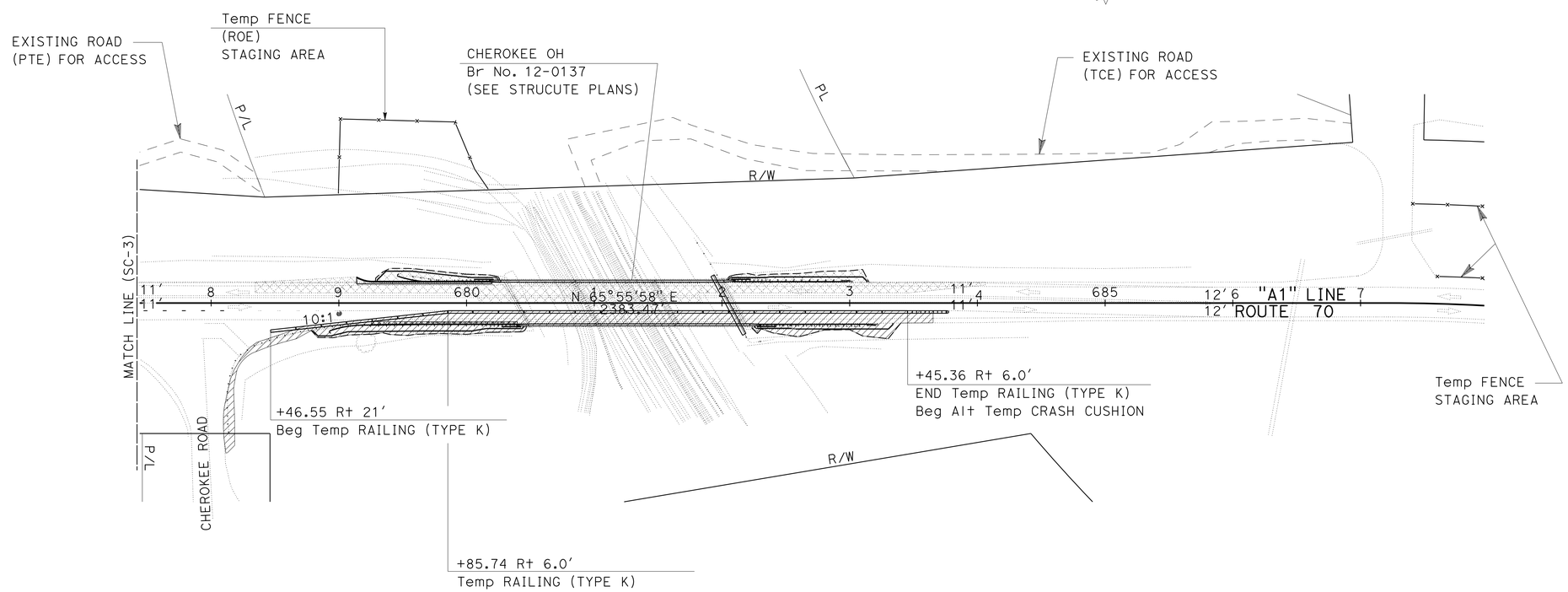


# STAGE CONSTRUCTION
## STAGE 2

SEGMENT 4: EASTBOUND SIDE CHEROKEE OH ROUTE 70

SCALE: 1" = 50'

**SC-4**

STATE OF CALIFORNIA - DEPARTMENT OF TRANSPORTATION
Caltrans® DESIGN

FUNCTIONAL SUPERVISOR: ALI KIANI
CALCULATED-DESIGNED BY: DAVID ROBERTS
CHECKED BY: MIKE PANCHESSON
REVISED BY
DATE REVISED

LAST REVISION 03-08-14
DATE PLOTTED => 08-MAY-2014
TIME PLOTTED => 14:04

| Dist | COUNTY | ROUTE | POST MILES TOTAL PROJECT | SHEET No. | TOTAL SHEETS |
|---|---|---|---|---|---|
| 03 | But | 70 | 26.7/27.1 | 17 | 83 |

M. A. Panchesson 4-28-14
REGISTERED CIVIL ENGINEER DATE

4-28-14
PLANS APPROVAL DATE

REGISTERED PROFESSIONAL ENGINEER M.A PANCHESSON No. 44125 Exp. 06-30-15 CIVIL STATE OF CALIFORNIA

*THE STATE OF CALIFORNIA OR ITS OFFICERS OR AGENTS SHALL NOT BE RESPONSIBLE FOR THE ACCURACY OR COMPLETENESS OF SCANNED COPIES OF THIS PLAN SHEET.*

## NOTES:

STAGE 3

1. REMOVE TEMPORARY RAILING (TYPE K), REPAIR EXISTING DECK IN SPOT LOCATIONS, PLACE POLYESTER CONCRETE OVERLAY 1"± ON BRIDGE DECK. INSTALL NEW SEAL JOINTS, SEE STRUCTURE PLANS.
2. PLACE 0.15′ HMA (TYPE A) ON EB LANE FROM "A1" 663+00 TO 670+69.90 AND 672+16.86 TO 680+36.84 AND 682+11.22 TO 685+85.00.
3. FOR ACCURATE RIGHT OF WAY, CONTACT RIGHT OF WAY ENGINEERING AT DISTRIC OFFICE.

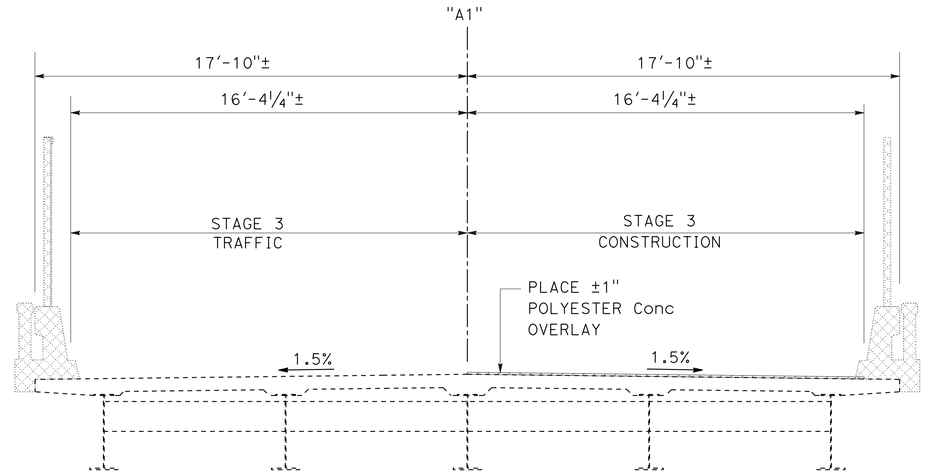


**TYPICAL SECTION**
NO SCALE
"A1" 670+69.90 Rt TO "A1" 672+16.86 Rt

## LEGEND:

CONSTRUCT THIS STAGE

PREVIOUS STAGE WORK

## ABBREVIATION

ROE - RIGHT OF ENTRY

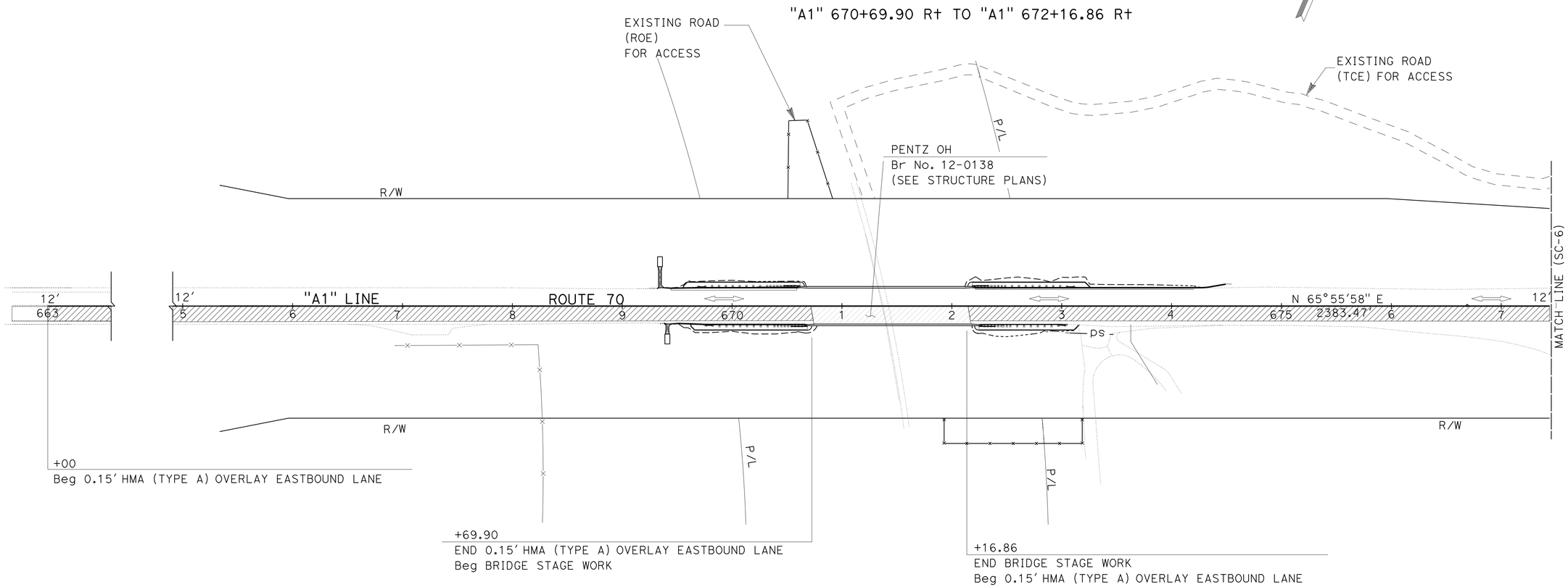


# STAGE CONSTRUCTION
## STAGE 3
SEGMENT 5: EASTBOUND LANE PENTZ OH ROUTE 70

SCALE: 1" = 50′

**SC-5**

STATE OF CALIFORNIA - DEPARTMENT OF TRANSPORTATION
Caltrans DESIGN

FUNCTIONAL SUPERVISOR: ALI KIANI
CALCULATED-DESIGNED BY: DAVID ROBERTS
CHECKED BY: MIKE PANCHESSON
REVISED BY
DATE REVISED

LAST REVISION 03-08-14
DATE PLOTTED => 08-MAY-2014
TIME PLOTTED => 14:04

| Dist | COUNTY | ROUTE | POST MILES TOTAL PROJECT | SHEET No. | TOTAL SHEETS |
|---|---|---|---|---|---|
| 03 | But | 70 | 26.7/27.1 | 18 | 83 |

M. A. Panchesson 4-28-14
REGISTERED CIVIL ENGINEER DATE

4-28-14
PLANS APPROVAL DATE

REGISTERED PROFESSIONAL ENGINEER M.A PANCHESSON No. 44125 Exp. 06-30-15 CIVIL STATE OF CALIFORNIA

*THE STATE OF CALIFORNIA OR ITS OFFICERS OR AGENTS SHALL NOT BE RESPONSIBLE FOR THE ACCURACY OR COMPLETENESS OF SCANNED COPIES OF THIS PLAN SHEET.*

## NOTES:

STAGE 3

1. REMOVE TEMPORARY RAILING (TYPE K), REPAIR EXISTING DECK IN SPOT LOCATIONS, PLACE POLYESTER CONCRETE OVERLAY 1"± ON BRIDGE DECK INSTALL NEW SEAL JOINTS, SEE STRUCTURE PLANS.
2. PLACE 0.15' HMA (TYPE A) ON EB LANE FROM "A1" 663+00 TO 670+69.90 AND 672+16.86 TO 680+36.84 AND 682+11.22 TO 685+85.00.
3. FOR ACCURATE RIGHT OF WAY, CONTACT RIGHT OF WAY ENGINEERING AT DISTRIC OFFICE.

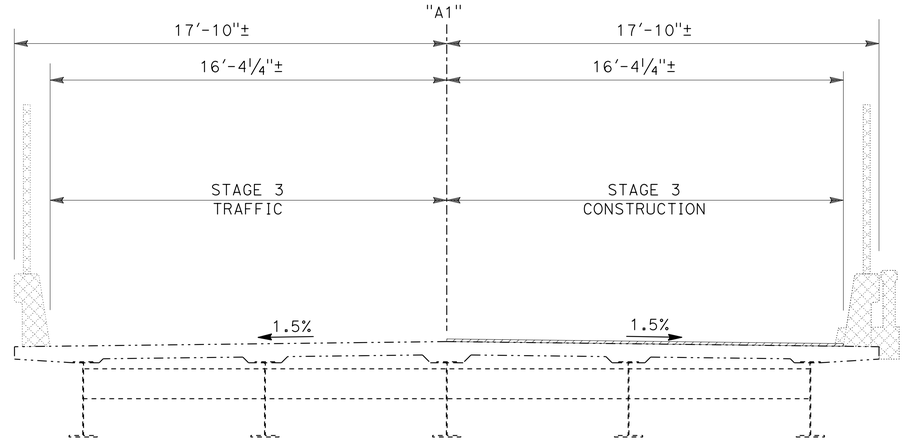


## TYPICAL SECTION

NO SCALE

Sta "A1" 680+36.84 Rt TO "A1" 682+11.22 Rt

## LEGEND:

CONSTRUCT THIS STAGE

PREVIOUS STAGE WORK

## ABBREVIATION

ROE - RIGHT OF ENTRY

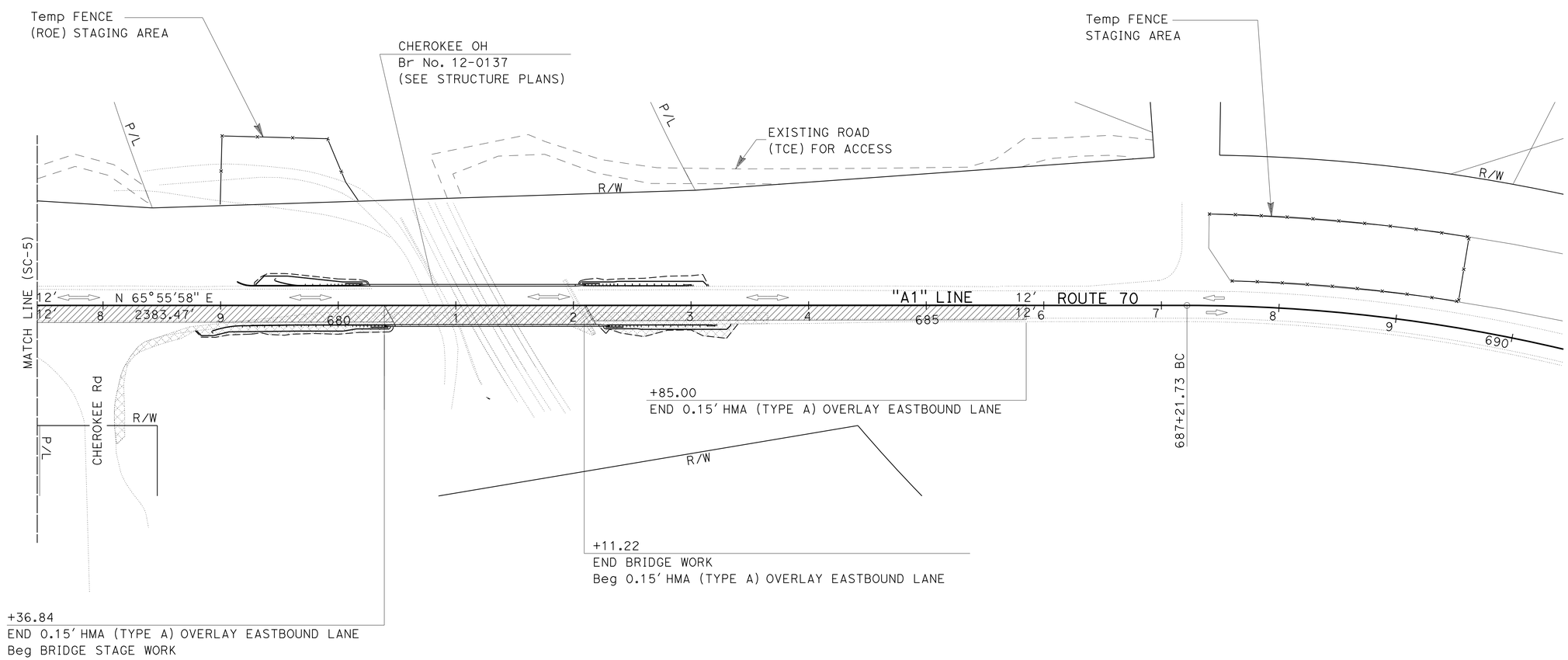


# STAGE CONSTRUCTION

## STAGE 3

SEGMENT 6: EASTBOUND SIDE CHEROKEE OH ROUTE 70

SCALE: 1" = 50'

**SC-6**

STATE OF CALIFORNIA - DEPARTMENT OF TRANSPORTATION
Caltrans
DESIGN

FUNCTIONAL SUPERVISOR: ALI KIANI
CALCULATED-DESIGNED BY: DAVID ROBERTS
CHECKED BY: MIKE PANCEHSSON
REVISED BY
DATE REVISED

LAST REVISION 03-08-14
DATE PLOTTED => 08-MAY-2014
TIME PLOTTED => 14:04

| Dist | COUNTY | ROUTE | POST MILES TOTAL PROJECT | SHEET No. | TOTAL SHEETS |
|---|---|---|---|---|---|
| 03 | But | 70 | 26.7/27.1 | 19 | 83 |

M. A. Panchesson 4-28-14
REGISTERED CIVIL ENGINEER DATE

4-28-14
PLANS APPROVAL DATE

REGISTERED PROFESSIONAL ENGINEER M.A PANCHESSON No. 44125 Exp. 06-30-15 CIVIL STATE OF CALIFORNIA

*THE STATE OF CALIFORNIA OR ITS OFFICERS OR AGENTS SHALL NOT BE RESPONSIBLE FOR THE ACCURACY OR COMPLETENESS OF SCANNED COPIES OF THIS PLAN SHEET.*

## NOTES:

STAGE 4

1. REMOVE TEMPORARY RAILING (TYPE K), SET 24hr ONE-WAY TRAFFIC CONTROL ON TO WB LANE, REPAIR EXISTING DECK IN SPOT LOCATIONS PLACE POLYESTER CONCRETE OVERLAY ON BRIDGE DECK. INSTALL NEW SEAL JOINTS, SEE BRIDGE PLANS.
2. PLACE 0.15′ HOT MIX ASPLAT CONCERETE OVERLAY ON EB LANE FROM STATION 663+00 TO 670+22.62 AND STATION 672+63.62 TO 679+90.39 AND 682+60.03 TO STATION 683+00. PLACE CONFORM TAPER.
3. FOR ACCURATE RIGHT OF WAY, CONTACT RIGHT OF WAY ENGINEERING AT DISTRIC OFFICE.

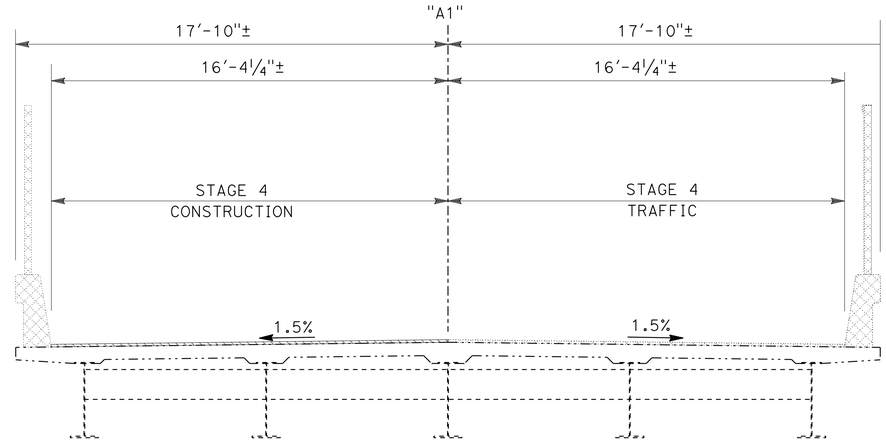


## TYPICAL SECTION

NO SCALE

"A1" 671+69.90 Lt TO "A1" 672+16.86 Lt

## LEGEND:

CONSTRUCT THIS STAGE

PREVIOUS STAGE WORK

## ABBREVIATION

ROE - RIGHT OF ENTRY

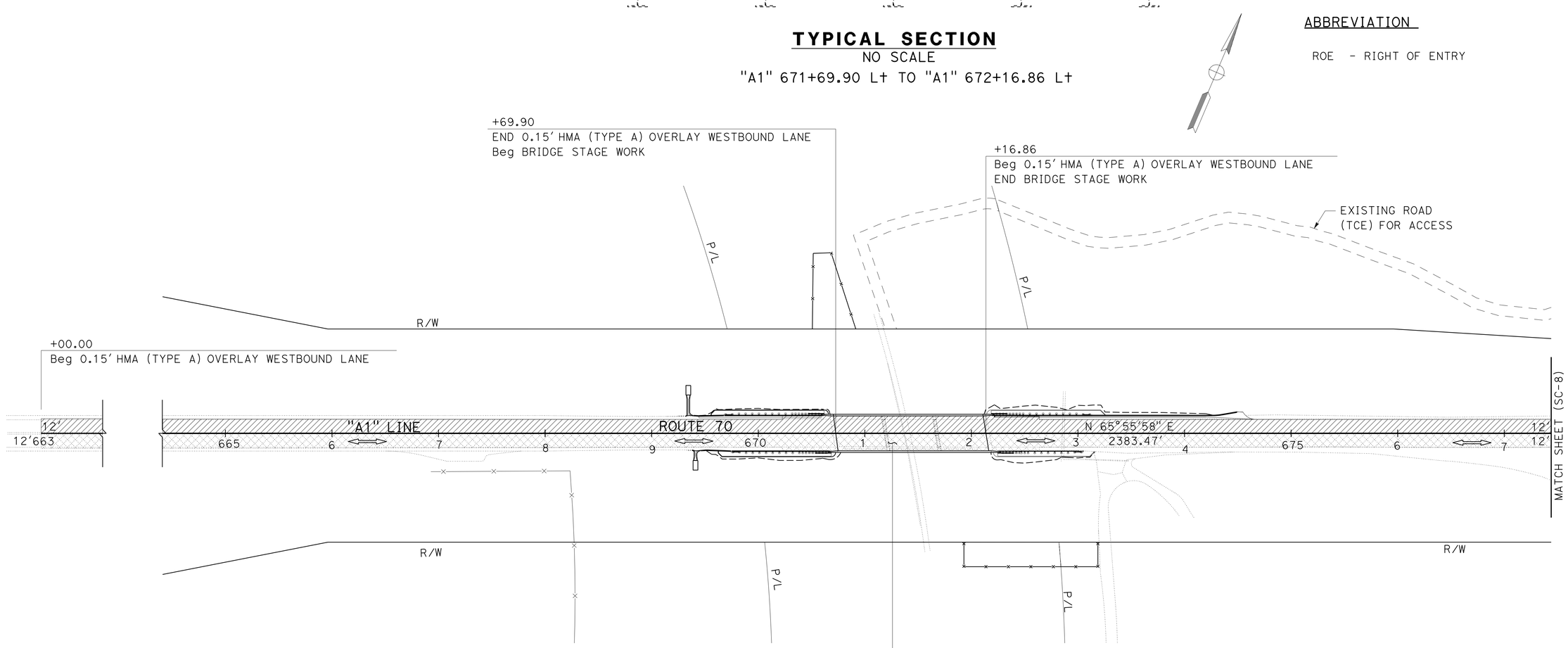


# STAGE CONSTRUCTION
## STAGE 4

SEGMENT 7: WESTBOUND SIDE PENTZ OH ROUTE 70

SCALE: 1" = 50′

**SC-7**

STATE OF CALIFORNIA - DEPARTMENT OF TRANSPORTATION
Caltrans
DESIGN

FUNCTIONAL SUPERVISOR: ALI KIANI
CALCULATED-DESIGNED BY: DAVID ROBERTS
CHECKED BY: MIKE PANCHESSON
REVISED BY
DATE REVISED

LAST REVISION 03-09-14
DATE PLOTTED => 08-MAY-2014
TIME PLOTTED => 14:04

| Dist | COUNTY | ROUTE | POST MILES TOTAL PROJECT | SHEET No. | TOTAL SHEETS |
|---|---|---|---|---|---|
| 03 | But | 70 | 26.7/27.1 | 20 | 83 |

M. A. Panchesson 4-28-14
REGISTERED CIVIL ENGINEER DATE

4-28-14
PLANS APPROVAL DATE

REGISTERED PROFESSIONAL ENGINEER M.A PANCHESSON No. 44125 Exp. 06-30-15 CIVIL STATE OF CALIFORNIA

*THE STATE OF CALIFORNIA OR ITS OFFICERS OR AGENTS SHALL NOT BE RESPONSIBLE FOR THE ACCURACY OR COMPLETENESS OF SCANNED COPIES OF THIS PLAN SHEET.*

## NOTES:

### STAGE 4

1. SET UP ONE-WAY TRAFFIC, REPAIR EXISTING DECK IN SPOT LOCATIONS PLACE POLYESTER CONCRETE OVERLAY 1"± ON BRIDGE DECK. INSTALL NEW SEAL JOINTS, SEE STRUCTURE PLANS.
2. PLACE 0.15' HOT MIX ASPHALT CONCERETE OVERLAY ON WB LANE FROM STATION 663+00 TO 670+22.62, 672+63.62 TO 679+90.39 AND 682+60.03 TO 683+00. PLACE FINAL CONFORM TAPER.
3. PLACE FINAL TRAFFIC STRIPE & PAVEMENT MARKINGS, INSTALL ROADSIDE SIGNS, AND REMOVE TEMPORARY FENCING.
3. FOR ACCURATE RIGHT OF WAY, CONTACT RIGHT OF WAY ENGINEERING AT DISTRIC OFFICE.

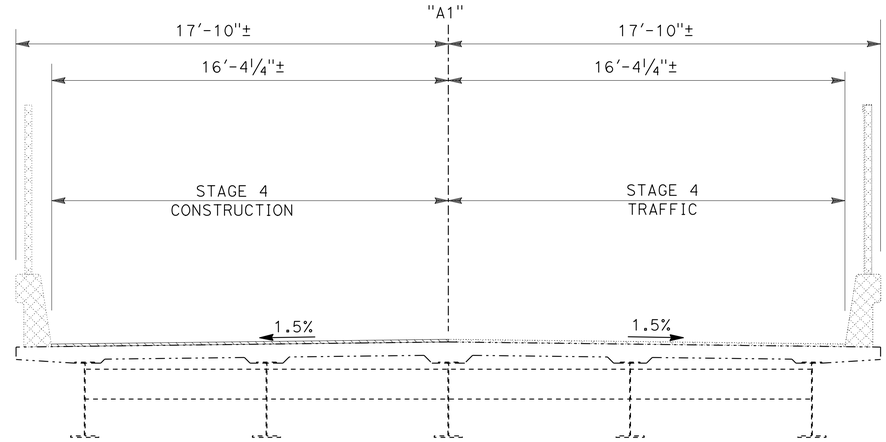


## TYPICAL SECTION
NO SCALE

"A1" 680+36.84 Lt TO "A1" 682+11.22 Lt

## LEGEND:

CONSTRUCT THIS STAGE

PREVIOUS STAGE WORK

## ABBREVIATION

ROE - RIGHT OF ENTRY

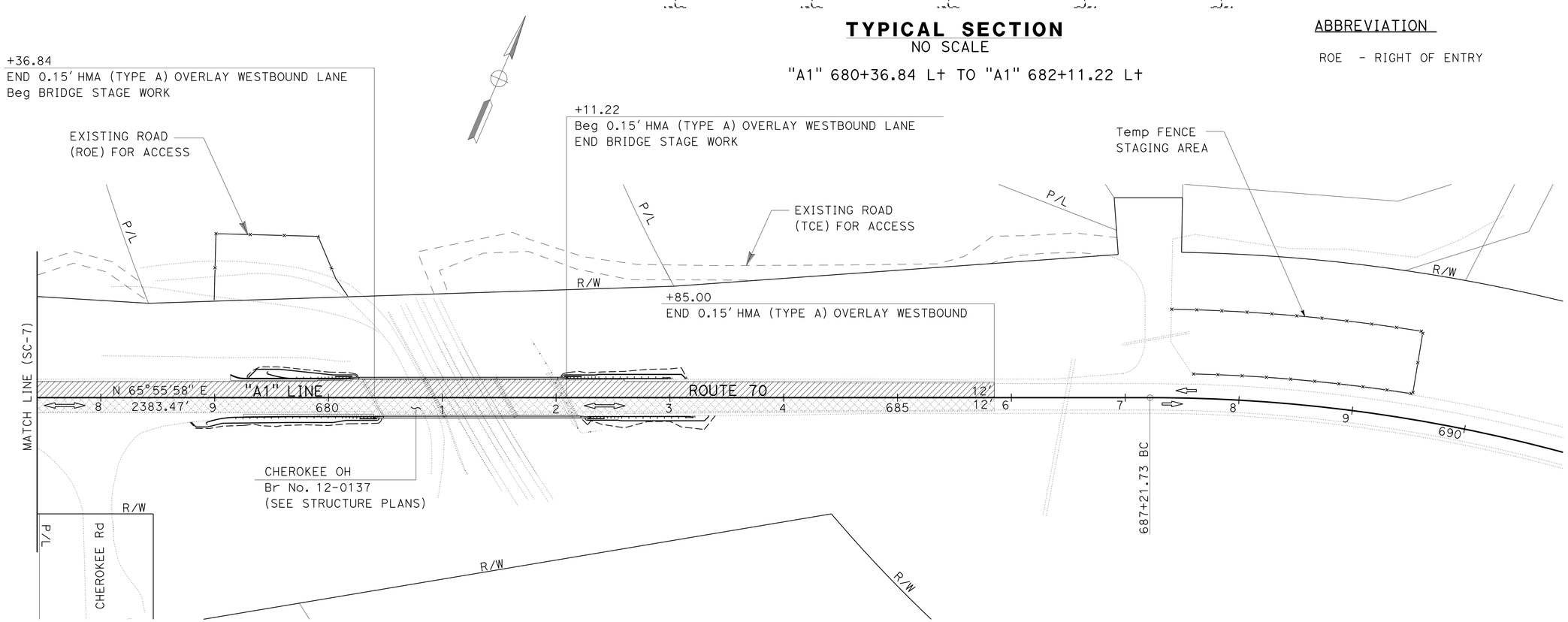


# STAGE CONSTRUCTION
## STAGE 4
SEGMENT 8: WESTBOUND SIDE CHEROKEE OH ROUTE 70

SCALE: 1" = 50'

**SC-8**

STATE OF CALIFORNIA - DEPARTMENT OF TRANSPORTATION
Caltrans® DESIGN

FUNCTIONAL SUPERVISOR: ALI KIANI
CALCULATED-DESIGNED BY: DAVID ROBERTS
CHECKED BY: MIKE PANCEHSSON
REVISED BY
DATE REVISED

LAST REVISION 03-09-14 | DATE PLOTTED => 08-MAY-2014 | TIME PLOTTED => 14:04

| Dist | COUNTY | ROUTE | POST MILES TOTAL PROJECT | SHEET No. | TOTAL SHEETS |
|---|---|---|---|---|---|
| 03 | But | 70 | 26.7/27.1 | 21 | 83 |

M. A. Panchesson 4-28-14
REGISTERED CIVIL ENGINEER DATE

4-28-14
PLANS APPROVAL DATE

REGISTERED PROFESSIONAL ENGINEER M.A PANCHESSON No. 44125 Exp. 06-30-15 CIVIL STATE OF CALIFORNIA

*THE STATE OF CALIFORNIA OR ITS OFFICERS OR AGENTS SHALL NOT BE RESPONSIBLE FOR THE ACCURACY OR COMPLETENESS OF SCANNED COPIES OF THIS PLAN SHEET.*

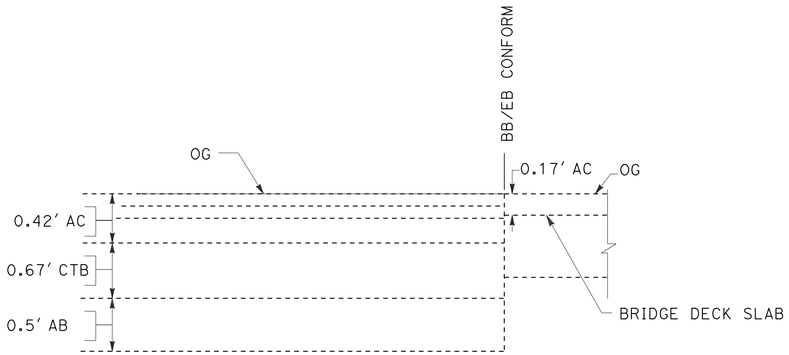


EXISTING CONDITION

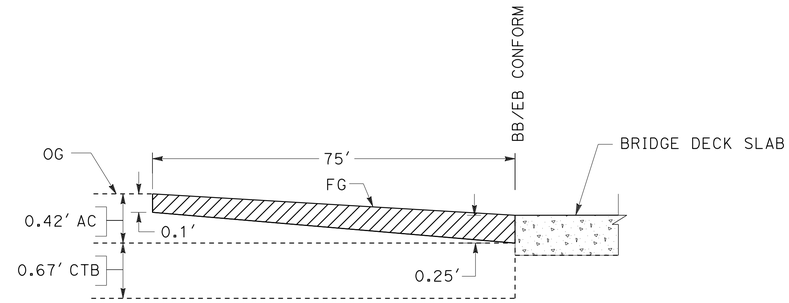


STAGE 1 AND 2
CONFORM TAPER

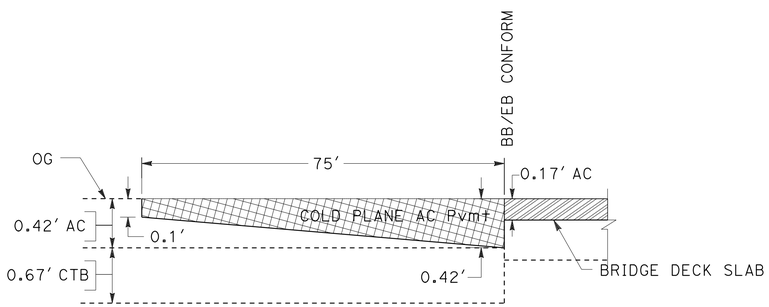


STAGE 1
COLD PLANE AC Pvmt

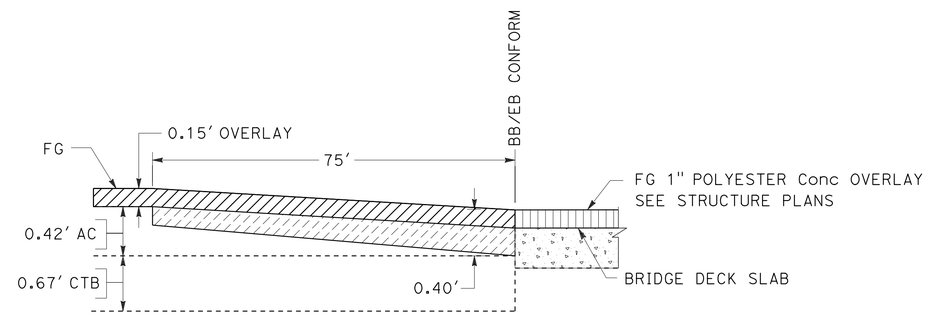


STEP 4 & 5
FINAL CONFORM

HMA (TYPE A)
CONFORM TAPER

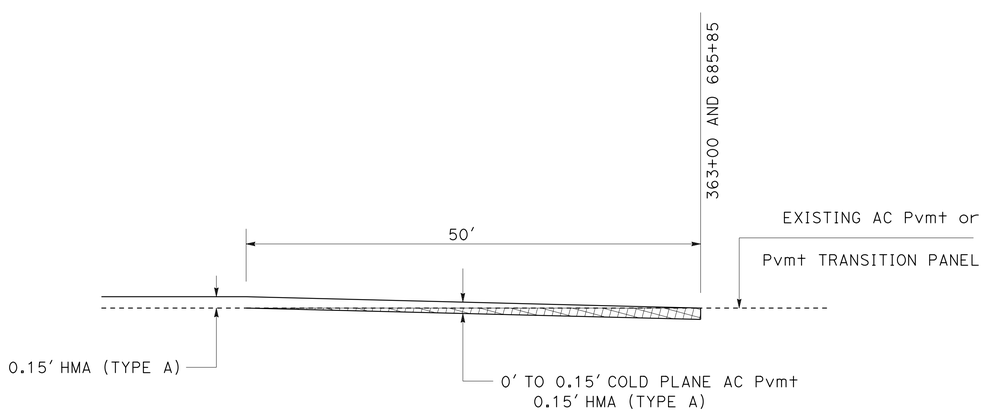


**OVERLAY CONFORM DETAIL**

Rte 70 STAGE 3 & 4

LEGEND:

- COLD PLANE AC Pvmt EXIST AC
- HMA (TYPE A)
- REMOVE AC Pmvt
- POLYESTER Conc OVERLAY
- PREVIOUS COLD PLANE TAPER

# STAGE CONSTRUCTION DETAIL

NO SCALE

**SCD-1**

STATE OF CALIFORNIA - DEPARTMENT OF TRANSPORTATION
Caltrans DIVISION OF ENGINEERING

FUNCTIONAL SUPERVISOR: ALI KIANI
CALCULATED-DESIGNED BY: DAVID ROBERTS
CHECKED BY: MIKE PANCHESSON
REVISED BY / DATE REVISED

LAST REVISION 03-10-14
DATE PLOTTED => 08-MAY-2014 14:04

| Dist | COUNTY | ROUTE | POST MILES TOTAL PROJECT | SHEET No. | TOTAL SHEETS |
|---|---|---|---|---|---|
| 03 | But | 70 | 26.7/27.1 | 22 | 83 |

Kris M. Albers 4-28-14
REGISTERED CIVIL ENGINEER DATE

4-28-14
PLANS APPROVAL DATE

REGISTERED PROFESSIONAL ENGINEER
KRIS M. ALBERS
No. 49986
Exp. 6-30-15
CIVIL
STATE OF CALIFORNIA

*THE STATE OF CALIFORNIA OR ITS OFFICERS OR AGENTS SHALL NOT BE RESPONSIBLE FOR THE ACCURACY OR COMPLETENESS OF SCANNED COPIES OF THIS PLAN SHEET.*

## LEGEND

| | |
|---|---|
| ⊢ | LIMIT OF STRIPING PATTERN |
| ⟨No./P⟩ | PAVEMENT DELINEATION DETAIL NUMBER P=PAINT |
| PAINT | TEMPORARY TRAFFIC STRIPE (PAINT) |
| ⊕ | TRAFFIC PLASTIC DRUM |
| S | "STOP" PAVEMENT MARKING |
| RPM | REMOVE PAVEMENT MARKING |
| TPMT | TEMPORARY PAVEMENT MARKING TAPE |
| (No.) | CONSTRUCTION AREA SIGN NUMBER |
| ⟨CA⟩ | CALIFORNIA SIGN CODE |
| ⊢ | SIGN - SINGLE POST |
| ⇨ | DIRECTION OF TRAVEL |

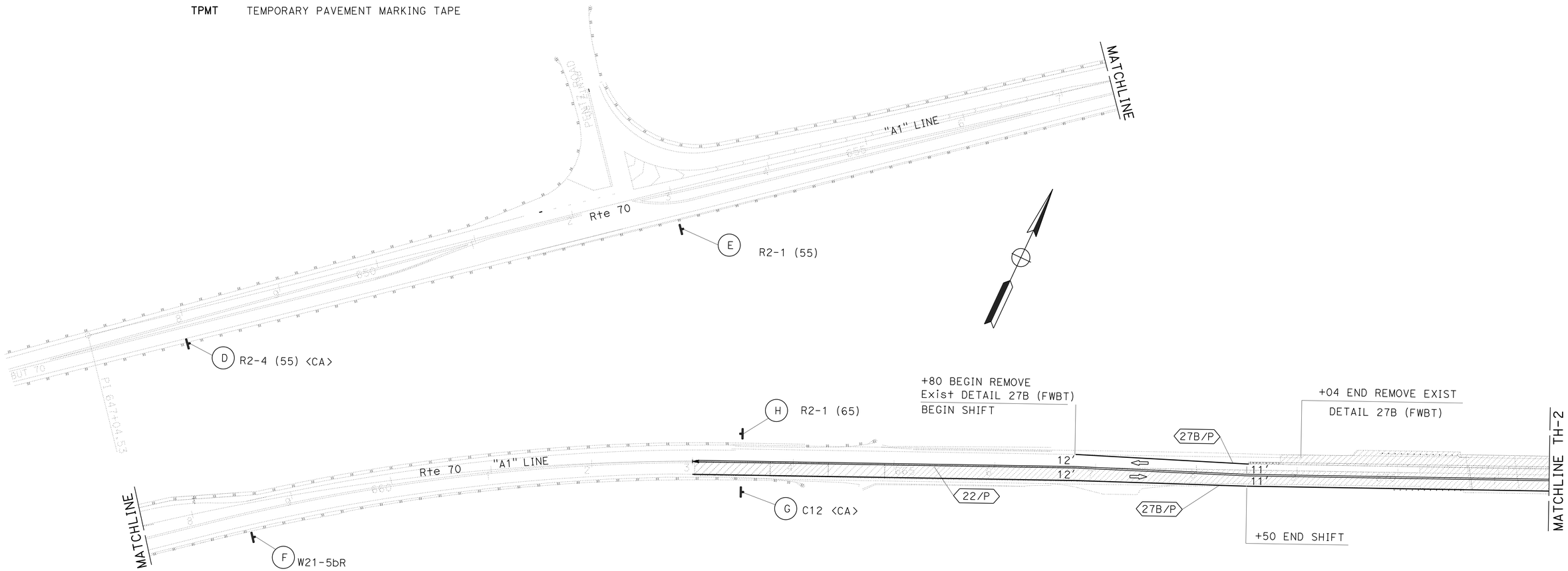


## NOTES:

1. ALL LANES SHALL BE 12' WIDE UNLESS OTHERWISE SHOWN.
2. ALL EXISTING SIGNS NOT SHOWN FOR REMOVAL SHALL REMAIN IN PLACE.
3. ALL SIGN CODES SHOWN ARE FEDERAL SIGN CODES UNLESS OTHERWISE DESIGNATED AS CALIFORNIA SIGN CODES.
4. TRAFFIC PLASTIC DRUMS SHALL BE INSTALLED ON 50 FOOT CENTERS UNLESS OTHERWISE SHOWN.

*APPROVED FOR TRAFFIC HANDLING WORK ONLY*

# TRAFFIC HANDLING PLAN AND SIGN PLAN

**STAGE 1**

SCALE: 1"=50'

**TH-1**

STATE OF CALIFORNIA - DEPARTMENT OF TRANSPORTATION
Caltrans
TRAFFIC

FUNCTIONAL SUPERVISOR: SERGIO ACEVES
CALCULATED-DESIGNED BY: KRIS ALBERS
CHECKED BY: JACK KEMMERLY
REVISED BY
DATE REVISED

LAST REVISION 02-25-14
DATE PLOTTED => 08-MAY-2014
TIME PLOTTED => 14:04

| Dist | COUNTY | ROUTE | POST MILES TOTAL PROJECT | SHEET No. | TOTAL SHEETS |
|---|---|---|---|---|---|
| 03 | But | 70 | 26.7/27.1 | 23 | 83 |

Kris M. Albers 4-28-14
REGISTERED CIVIL ENGINEER DATE

4-28-14
PLANS APPROVAL DATE

REGISTERED PROFESSIONAL ENGINEER
KRIS M. ALBERS
No. 49986
Exp. 6-30-15
CIVIL
STATE OF CALIFORNIA

*THE STATE OF CALIFORNIA OR ITS OFFICERS OR AGENTS SHALL NOT BE RESPONSIBLE FOR THE ACCURACY OR COMPLETENESS OF SCANNED COPIES OF THIS PLAN SHEET.*

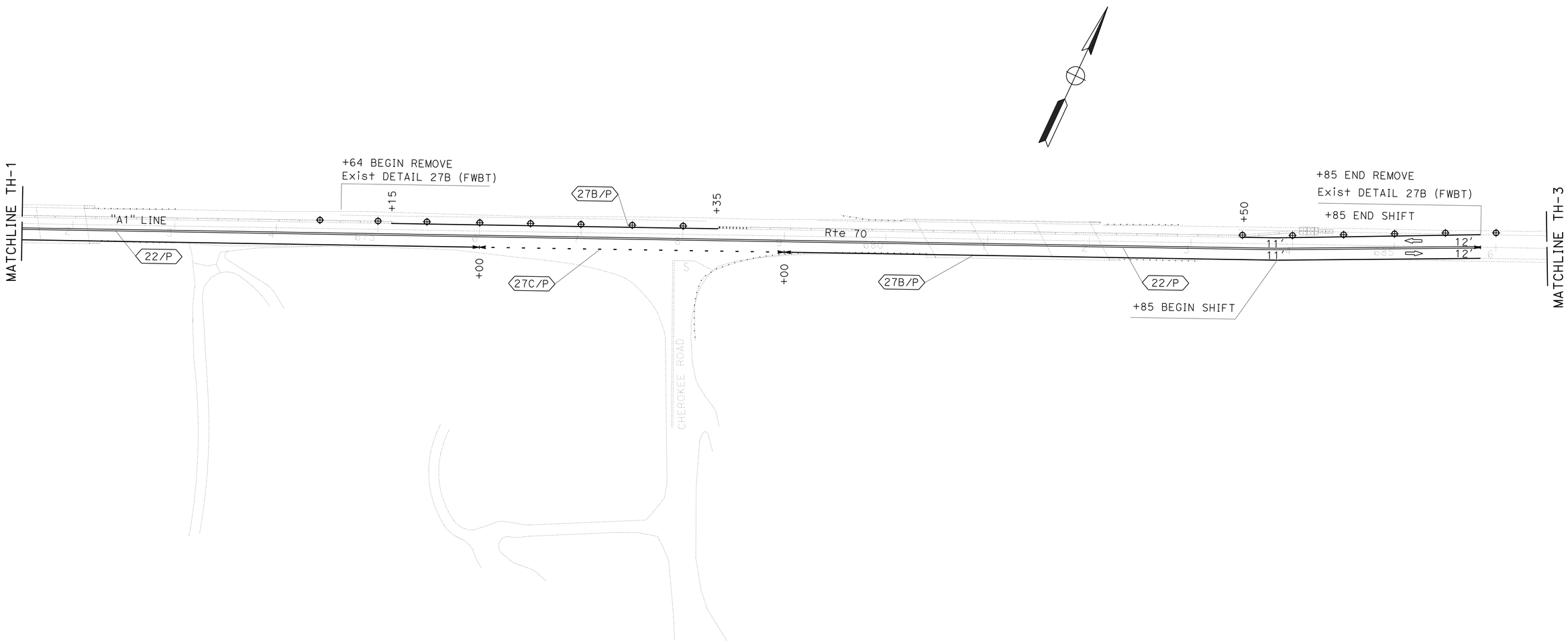


# TRAFFIC HANDLING PLAN AND SIGN PLAN

**STAGE 1**

SCALE: 1"=50'

**TH-2**

*APPROVED FOR TRAFFIC HANDLING WORK ONLY*

STATE OF CALIFORNIA - DEPARTMENT OF TRANSPORTATION
Caltrans
**TRAFFIC**

FUNCTIONAL SUPERVISOR: SERGIO ACEVES

CALCULATED-DESIGNED BY: KRIS ALBERS
CHECKED BY: JACK KEMMERLY

REVISED BY
DATE REVISED

LAST REVISION 01-21-14
DATE PLOTTED => 08-MAY-2014
TIME PLOTTED => 14:04

| Dist | COUNTY | ROUTE | POST MILES TOTAL PROJECT | SHEET No. | TOTAL SHEETS |
|---|---|---|---|---|---|
| 03 | But | 70 | 26.7/27.1 | 24 | 83 |

Kris M. Albers 4-28-14
REGISTERED CIVIL ENGINEER DATE

4-28-14
PLANS APPROVAL DATE

REGISTERED PROFESSIONAL ENGINEER
KRIS M. ALBERS
No. 49986
Exp. 6-30-15
CIVIL
STATE OF CALIFORNIA

*THE STATE OF CALIFORNIA OR ITS OFFICERS OR AGENTS SHALL NOT BE RESPONSIBLE FOR THE ACCURACY OR COMPLETENESS OF SCANNED COPIES OF THIS PLAN SHEET.*

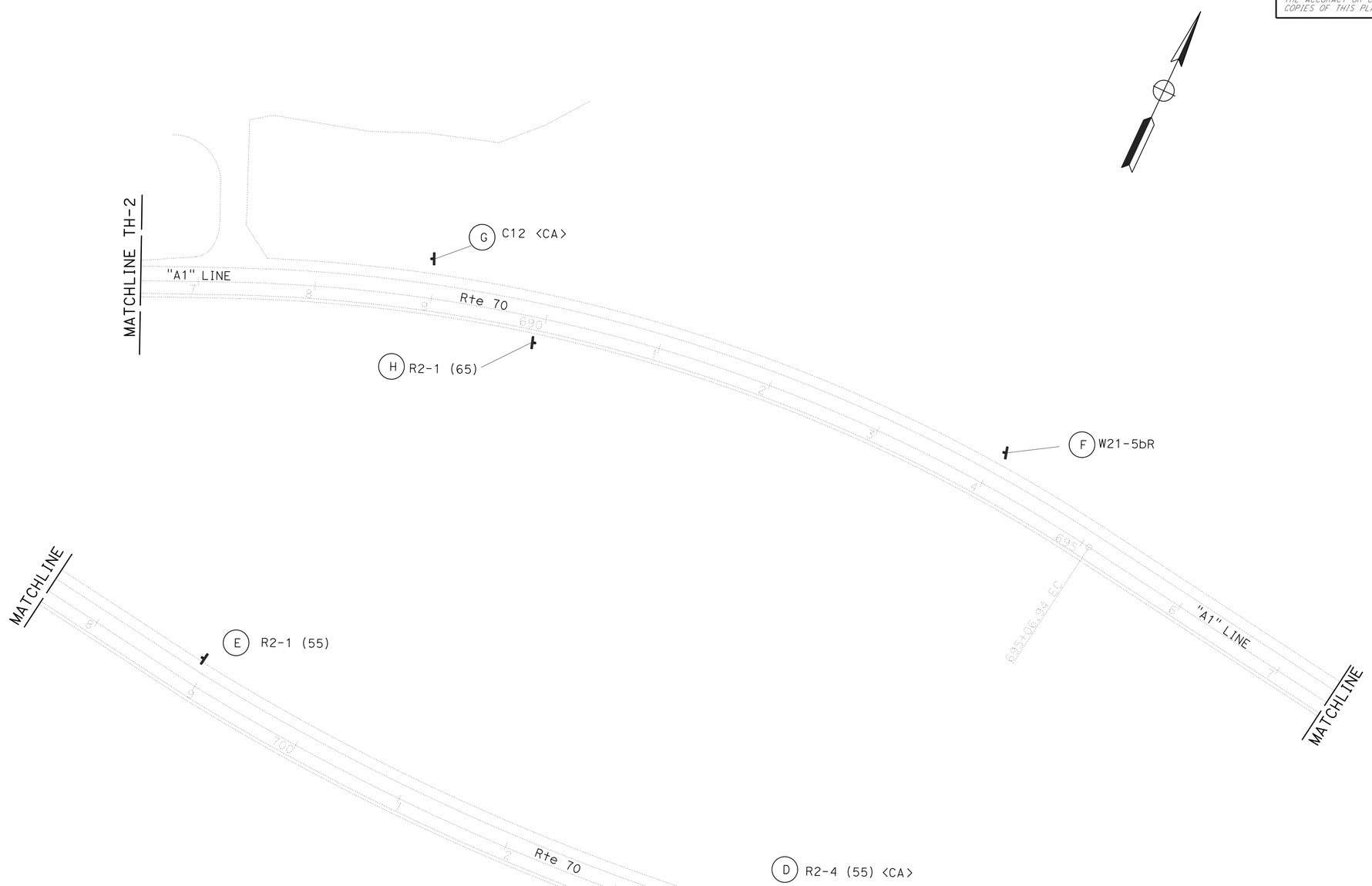


*APPROVED FOR TRAFFIC HANDLING WORK ONLY*

# TRAFFIC HANDLING PLAN AND SIGN PLAN

**STAGE 1**

SCALE: 1"=50'

**TH-3**

| REVISED BY | DATE REVISED |
|---|---|
| | |

| CALCULATED-DESIGNED BY | CHECKED BY |
|---|---|
| KRIS ALBERS | JACK KEMMERLY |

| FUNCTIONAL SUPERVISOR |
|---|
| SERGIO ACEVES |

STATE OF CALIFORNIA - DEPARTMENT OF TRANSPORTATION
Caltrans
TRAFFIC

LAST REVISION 03-03-14
DATE PLOTTED => 08-MAY-2014
TIME PLOTTED => 14:04

| Dist | COUNTY | ROUTE | POST MILES TOTAL PROJECT | SHEET No. | TOTAL SHEETS |
|---|---|---|---|---|---|
| 03 | But | 70 | 26.7/27.1 | 25 | 83 |

Kris M. Albers 4-28-14
REGISTERED CIVIL ENGINEER DATE

4-28-14
PLANS APPROVAL DATE

REGISTERED PROFESSIONAL ENGINEER
KRIS M. ALBERS
No. 49986
Exp. 6-30-15
CIVIL
STATE OF CALIFORNIA

*THE STATE OF CALIFORNIA OR ITS OFFICERS OR AGENTS SHALL NOT BE RESPONSIBLE FOR THE ACCURACY OR COMPLETENESS OF SCANNED COPIES OF THIS PLAN SHEET.*

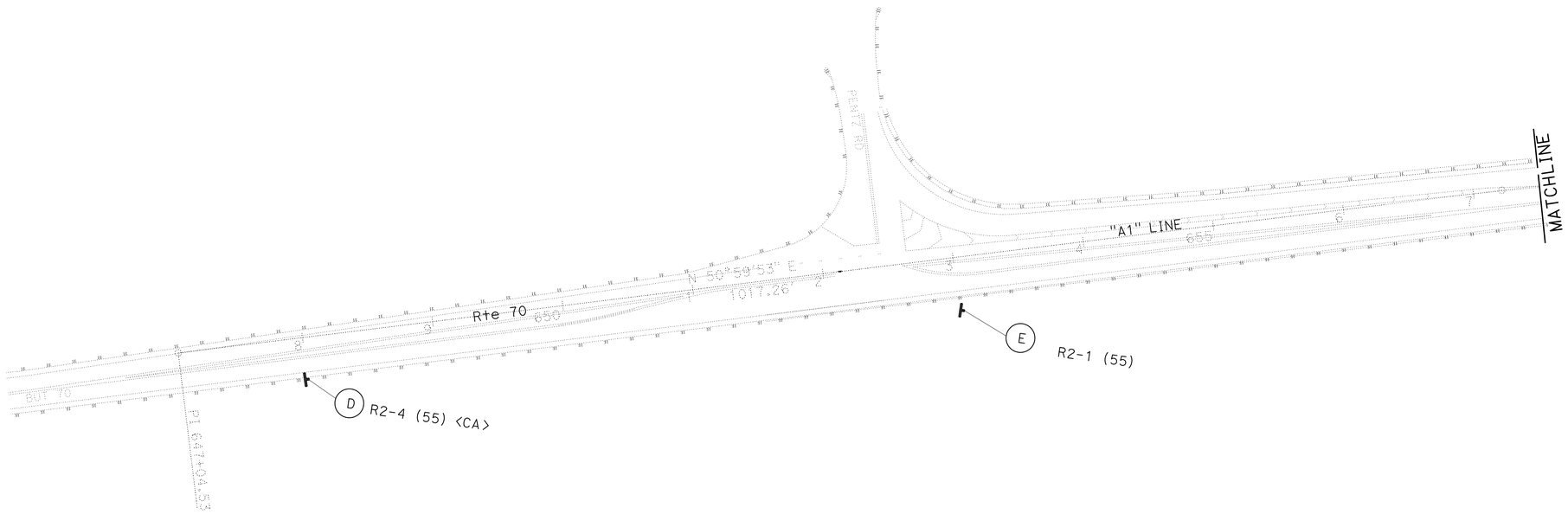


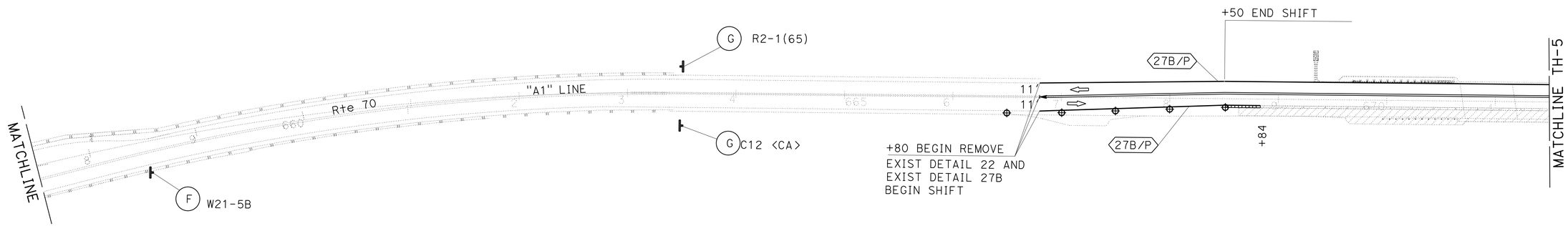


*APPROVED FOR TRAFFIC HANDLING WORK ONLY*

# TRAFFIC HANDLING PLAN AND SIGN PLAN

**STAGE 2**

SCALE: 1"=50'

**TH-4**

STATE OF CALIFORNIA - DEPARTMENT OF TRANSPORTATION
Caltrans
**TRAFFIC**

FUNCTIONAL SUPERVISOR: SERGIO ACEVES
CALCULATED-DESIGNED BY: KRIS ALBERS
CHECKED BY: JACK KEMMERLY
REVISED BY
DATE REVISED

LAST REVISION 03-03-14
DATE PLOTTED => 08-MAY-2014
TIME PLOTTED => 14:04

| Dist | COUNTY | ROUTE | POST MILES TOTAL PROJECT | SHEET No. | TOTAL SHEETS |
|---|---|---|---|---|---|
| 03 | But | 70 | 26.7/27.1 | 26 | 83 |

Kris M. Albers 4-28-14
REGISTERED CIVIL ENGINEER DATE

4-28-14
PLANS APPROVAL DATE

REGISTERED PROFESSIONAL ENGINEER
KRIS M. ALBERS
No. 49986
Exp. 6-30-15
CIVIL
STATE OF CALIFORNIA

*THE STATE OF CALIFORNIA OR ITS OFFICERS OR AGENTS SHALL NOT BE RESPONSIBLE FOR THE ACCURACY OR COMPLETENESS OF SCANNED COPIES OF THIS PLAN SHEET.*

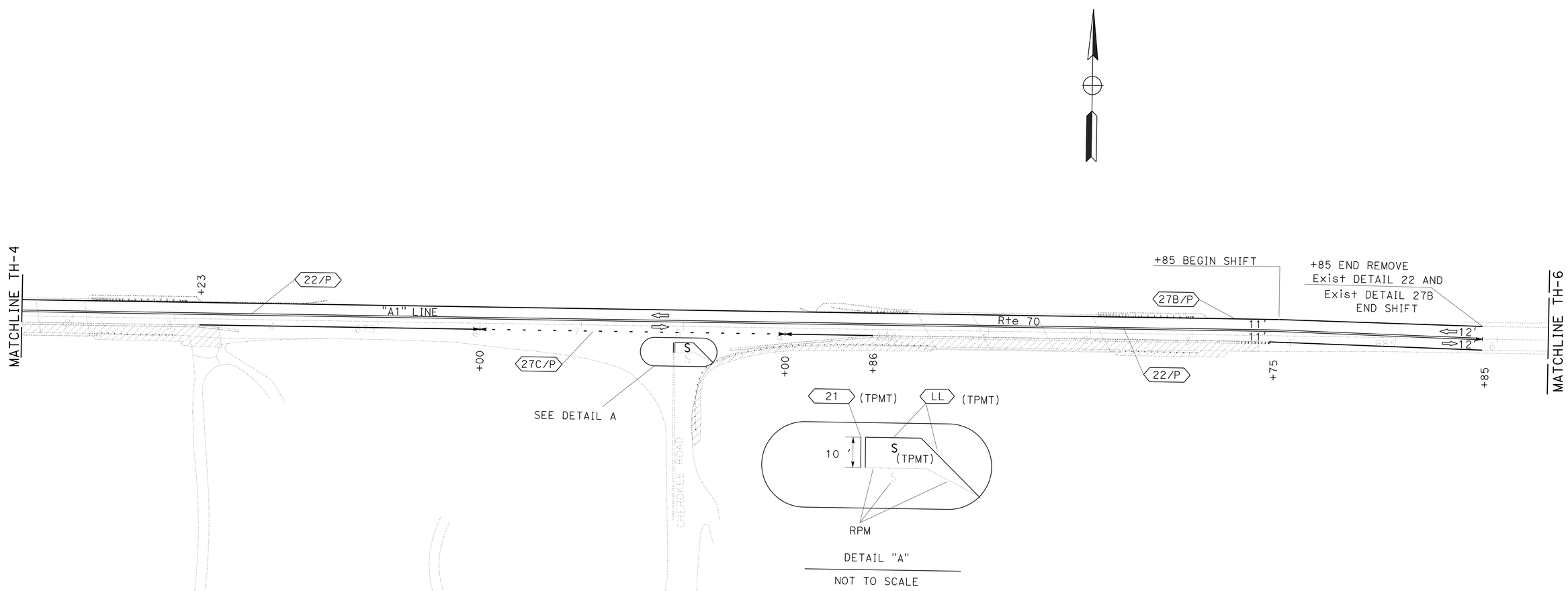


*APPROVED FOR TRAFFIC HANDLING WORK ONLY*

# TRAFFIC HANDLING PLAN AND SIGN PLAN

**STAGE 2**

SCALE: 1"=50'

**TH-5**

| CALCULATED-DESIGNED BY | KRIS ALBERS | REVISED BY |
|---|---|---|
| CHECKED BY | JACK KEMMERLY | DATE REVISED |

FUNCTIONAL SUPERVISOR: SERGIO ACEVES

STATE OF CALIFORNIA - DEPARTMENT OF TRANSPORTATION

Caltrans

**TRAFFIC**

LAST REVISION 01-21-13

DATE PLOTTED => 08-MAY-2014
TIME PLOTTED => 14:04

| Dist | COUNTY | ROUTE | POST MILES TOTAL PROJECT | SHEET No. | TOTAL SHEETS |
|---|---|---|---|---|---|
| 03 | But | 70 | 26.7/27.1 | 27 | 83 |

Kris M. Albers 4-28-14
REGISTERED CIVIL ENGINEER DATE

4-28-14
PLANS APPROVAL DATE

REGISTERED PROFESSIONAL ENGINEER
KRIS M. ALBERS
No. 49986
Exp. 6-30-15
CIVIL
STATE OF CALIFORNIA

*THE STATE OF CALIFORNIA OR ITS OFFICERS OR AGENTS SHALL NOT BE RESPONSIBLE FOR THE ACCURACY OR COMPLETENESS OF SCANNED COPIES OF THIS PLAN SHEET.*

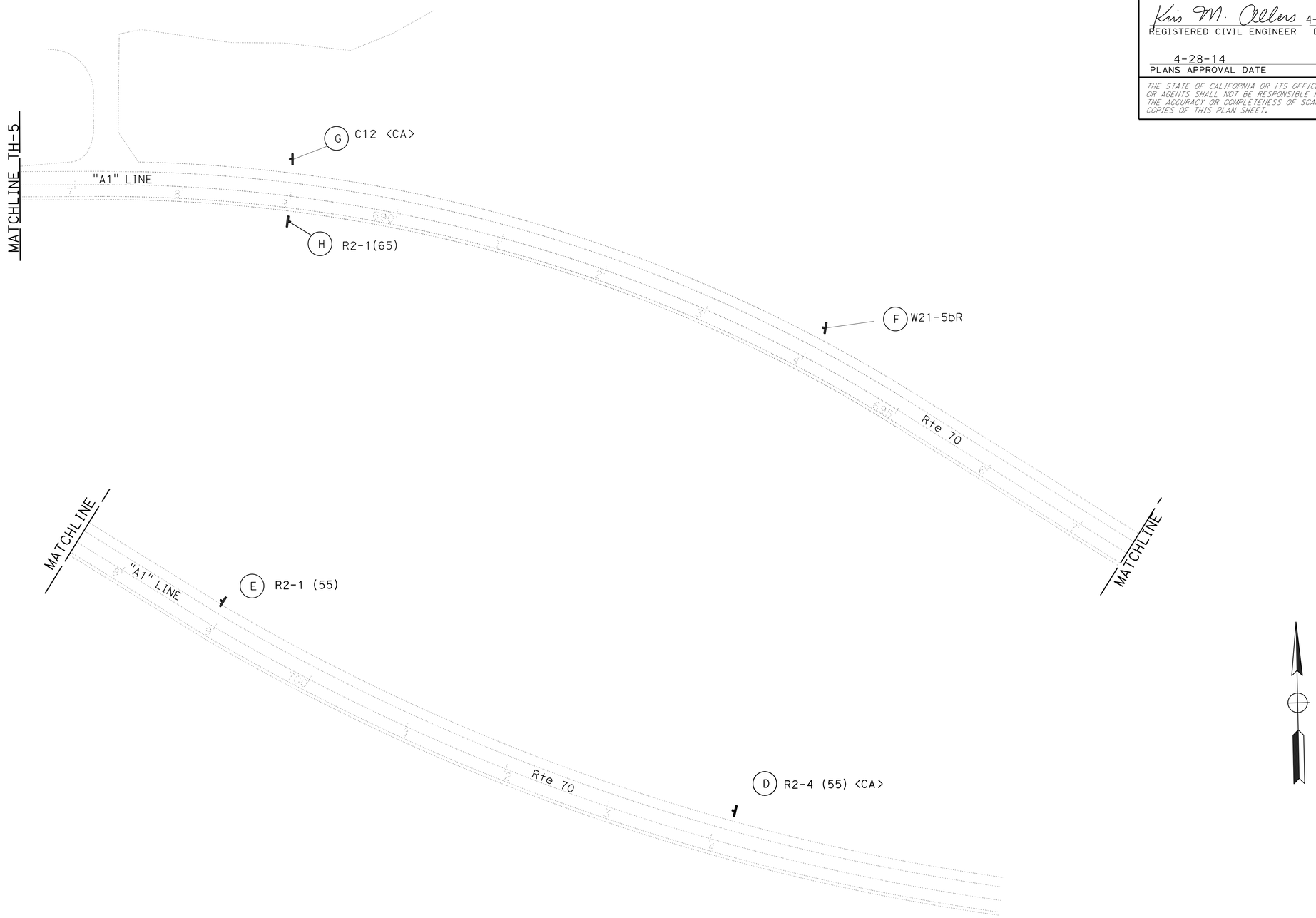


*APPROVED FOR TRAFFIC HANDLING WORK ONLY*

# TRAFFIC HANDLING PLAN AND SIGN PLAN

**STAGE 2**

SCALE: 1"=50'

**TH-6**

STATE OF CALIFORNIA - DEPARTMENT OF TRANSPORTATION
Caltrans
**TRAFFIC**

FUNCTIONAL SUPERVISOR: SERGIO ACEVES
CALCULATED-DESIGNED BY: KRIS ALBERS
CHECKED BY: JACK KEMMERLY
REVISED BY
DATE REVISED

LAST REVISION 01-21-14
DATE PLOTTED => 08-MAY-2014
TIME PLOTTED => 14:04

| Dist | COUNTY | ROUTE | POST MILES TOTAL PROJECT | SHEET No. | TOTAL SHEETS |
|---|---|---|---|---|---|
| 03 | But | 70 | 26.7/27.1 | 28 | 83 |

Kris M. Albers 4-28-14
REGISTERED CIVIL ENGINEER DATE

4-28-14
PLANS APPROVAL DATE

REGISTERED PROFESSIONAL ENGINEER
KRIS M. ALBERS
No. 49986
Exp. 6-30-15
CIVIL
STATE OF CALIFORNIA

*THE STATE OF CALIFORNIA OR ITS OFFICERS OR AGENTS SHALL NOT BE RESPONSIBLE FOR THE ACCURACY OR COMPLETENESS OF SCANNED COPIES OF THIS PLAN SHEET.*

## STATIONARY MOUNTED CONSTRUCTION AREA SIGNS

| SIGN LETTER | SIGN CODE FEDERAL | SIGN CODE CALIFORNIA | PANEL SIZE | SIGN MESSAGE | NUMBER OF POST AND SIZE | NUMBER OF SIGNS |
|---|---|---|---|---|---|---|
| D | | R2-4 (55) | 36" x 45" | 55 ZONE AHEAD | 1 - 4" x 6" | 2 |
| E | R2-1 (55) | | 36" x 48" | SPEED LIMIT 55 | 1 - 4" x 6" | 2 |
| F | W21-5bR | | 48" x 48" | RIGHT SHOULDER CLOSED AHEAD | 1 - 6" x 6" | 2 |
| G | | C12 | 48" x 48" | NARROW LANES | 1 - 6" x 6" | 2 |
| H | R2-1 (65) | | 36" x 48" | SPEED LIMIT 65 | 1 - 4" x 6" | 2 |

NOTES:

1. EXACT SIGN LOCATION TO BE DETERMINED BY THE ENGINEER.
2. FOR ADDITIONAL CONSTRUCTION AREA SIGNS, SEE CONSTRUCTION AREA SIGNS PLAN.

## TRAFFIC PLASTIC DRUMS

| Location | | Direction | Each |
|---|---|---|---|
| Stage 1 | Sta "A" 683+50 TO "A" 686+00 | FWBT | 14 |
| Stage 2 | Sta "A" 666+50 TO "A" 668+50 | FEBT | 5 |
| Total | | | 19 |

## TEMPORARY TRAFFIC STRIPE (PAINT)

| | Location | Direction | Detail 22 (FEET) | Detail 27B (FEET) | Detail 27C (FEET) |
|---|---|---|---|---|---|
| Stage 1 | Sta "A" 663+00 TO "A" 685+85 | | 2285 | | |
| | Sta "A" 663+00 TO "A" 676+00 | FEBT | | 1300 | |
| | Sta "A" 676+00 TO "A" 679+00 | FEBT | | | 300 |
| | Sta "A" 679+00 TO "A" 685+85 | FEBT | | 685 | |
| | Sta "A" 665+80 TO "A" 668+50 | FWBT | | 270 | |
| | Sta "A" 674+24 TO "A" 678+66 | FWBT | | 442 | |
| | Sta "A" 683+50 TO "A" 685+85 | FWBT | | 235 | |
| Stage 2 | Sta "A" 666+80 TO "A" 685+85 | | 1905 | | |
| | Sta "A" 666+80 TO "A" 668+84 | FEBT | | 204 | |
| | Sta "A" 673+23 TO "A" 676+00 | FEBT | | 277 | |
| | Sta "A" 666+80 TO "A" 685+85 | FWBT | | 1905 | |
| | Sta "A" 676+00 TO "A" 679+00 | FEBT | | | 300 |
| | Sta "A" 679+00 TO "A" 679+86 | FEBT | | 86 | |
| | Sta "A" 683+65 TO "A" 685+85 | FEBT | | 220 | |
| | SUBTOTAL | | 4190 | 5624 | 600 |
| | TOTAL | | | 10,414 | |

## REMOVE THERMOPLASTIC PAVEMENT MARKING (WATER BLASTING)

| DESCRIPTION | NUMBER | SQFT |
|---|---|---|
| "STOP" | 1 | 22 |
| LIMIT LINE | 1 | 40 |
| TOTAL | | 62 |

## TEMPORARY PAVEMENT MARKING (TAPE)

| Location | | LIMIT LINE SQFT | "STOP" SQFT |
|---|---|---|---|
| Stage 2 | CHEROKEE ROAD | 47 | 22 |
| Total | | 69 | |

## TEMPORARY TRAFFIC STRIPE (TAPE)

| Location | | Detail 21 (FEET) |
|---|---|---|
| Stage 2 | CHEROKEE ROAD | 20 |
| | TOTAL | 20 |

# TRAFFIC HANDLING QUANTITIES

# THQ-1

REVISED BY | DATE REVISED
KRIS ALBERS | JACK KEMMERLY
CALCULATED-DESIGNED BY | CHECKED BY
FUNCTIONAL SUPERVISOR: SERGIO ACEVES
STATE OF CALIFORNIA - DEPARTMENT OF TRANSPORTATION
Caltrans
TRAFFIC

LAST REVISION 03-05-14 | DATE PLOTTED => 08-MAY-2014 | TIME PLOTTED => 14:04

| Dist | COUNTY | ROUTE | POST MILES TOTAL PROJECT | SHEET No. | TOTAL SHEETS |
|---|---|---|---|---|---|
| 03 | But | 70 | 26.7/27.1 | 29 | 83 |

Kris M. Albers 4-28-14
REGISTERED CIVIL ENGINEER DATE

4-28-14
PLANS APPROVAL DATE

REGISTERED PROFESSIONAL ENGINEER
KRIS M. ALBERS
No. 49986
Exp. 6-30-15
CIVIL
STATE OF CALIFORNIA

*THE STATE OF CALIFORNIA OR ITS OFFICERS OR AGENTS SHALL NOT BE RESPONSIBLE FOR THE ACCURACY OR COMPLETENESS OF SCANNED COPIES OF THIS PLAN SHEET.*

## LEGEND

- LIMIT OF STRIPING PATTERN
- CHANGE IN STRIPING PATTERN
- (No.) PAVEMENT DELINEATION DETAIL NUMBER
- (LL) LIMIT LINE
- E DELINEATOR (TYPE E)
- F DELINEATOR (TYPE F)
- HP HIGHWAY POST MARKER
- L OBJECT MARKER (TYPE L-1)
- S "STOP" PAVEMENT MARKING
- (Sht-No.) ROADSIDE SIGN NUMBER
- <CA> CALIFORNIA SIGN CODE
- ■ REMOVE ROADSIDE SIGN
- ▲ RESET ROADSIDE SIGN
- RNS COUNTY ROAD NAME SIGN

## NOTE:

1. ALL LANES SHALL BE 12' WIDE UNLESS OTHERWISE SHOWN.
2. ALL DELINEATORS (CLASS 1) SHALL BE PLACED 100' ON CENTER.
3. ALL EXISTING SIGNS NOT SHOWN FOR REMOVAL OR RESETTING SHALL REMAIN IN PLACE.
4. ALL SIGN CODES SHOWN ARE FEDERAL SIGN CODES UNLESS OTHERWISE DESIGNATED AS CALIFORNIA SIGN CODES.

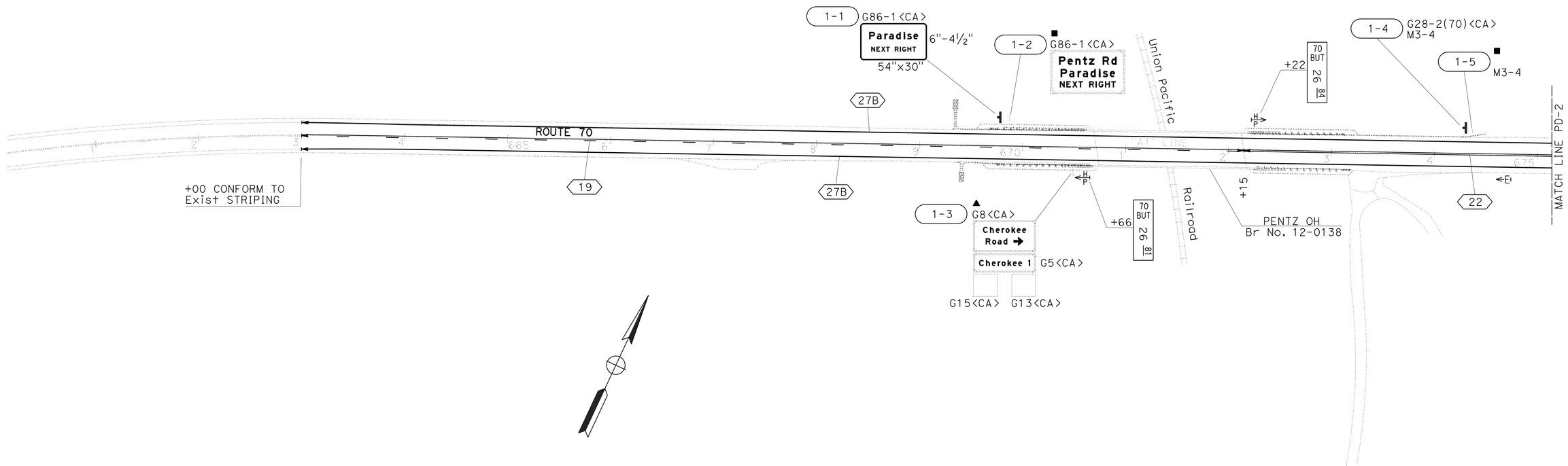


# PAVEMENT DELINEATION AND SIGN PLAN

SCALE: 1"=50'

**PD-1**

*APPROVED FOR PAVEMENT DELINEATION AND SIGN WORK ONLY*

STATE OF CALIFORNIA - DEPARTMENT OF TRANSPORTATION
Caltrans
TRAFFIC

FUNCTIONAL SUPERVISOR: SERGIO ACEVES
CALCULATED-DESIGNED BY: JACK KEMMERLY
CHECKED BY: KRIS ALBERS
REVISED BY
DATE REVISED

LAST REVISION 2-28-14
DATE PLOTTED => 08-MAY-2014
TIME PLOTTED => 14:04

| Dist | COUNTY | ROUTE | POST MILES TOTAL PROJECT | SHEET No. | TOTAL SHEETS |
|---|---|---|---|---|---|
| 03 | But | 70 | 26.7/27.1 | 30 | 83 |

Kris M. Albers 4-28-14
REGISTERED CIVIL ENGINEER DATE

4-28-14
PLANS APPROVAL DATE

REGISTERED PROFESSIONAL ENGINEER
KRIS M. ALBERS
No. 49986
Exp. 6-30-15
CIVIL
STATE OF CALIFORNIA

*THE STATE OF CALIFORNIA OR ITS OFFICERS OR AGENTS SHALL NOT BE RESPONSIBLE FOR THE ACCURACY OR COMPLETENESS OF SCANNED COPIES OF THIS PLAN SHEET.*

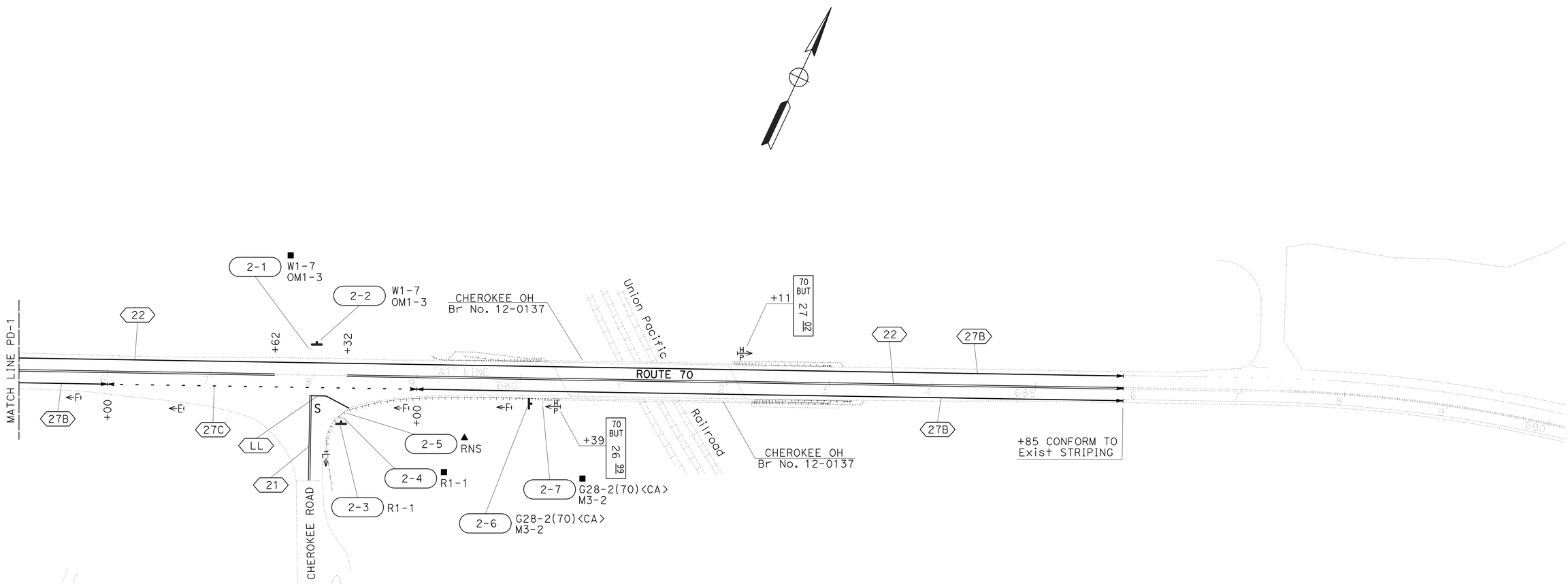


# PAVEMENT DELINEATION AND SIGN PLAN

SCALE: 1"=50'

**PD-2**

*APPROVED FOR PAVEMENT DELINEATION AND SIGN WORK ONLY*

STATE OF CALIFORNIA - DEPARTMENT OF TRANSPORTATION
Caltrans
TRAFFIC

FUNCTIONAL SUPERVISOR: SERGIO ACEVES
CALCULATED-DESIGNED BY: JACK KEMMERLY
CHECKED BY: KRIS ALBERS
REVISED BY
DATE REVISED

LAST REVISION 1-16-14
DATE PLOTTED => 08-MAY-2014
TIME PLOTTED => 14:04

| Dist | COUNTY | ROUTE | POST MILES TOTAL PROJECT | SHEET No. | TOTAL SHEETS |
|---|---|---|---|---|---|
| 03 | But | 70 | 26.7/27.1 | 31 | 83 |

Kris M. Albers 4-28-14
REGISTERED CIVIL ENGINEER DATE

4-28-14
PLANS APPROVAL DATE

REGISTERED PROFESSIONAL ENGINEER
Kris M. Albers
No. 49986
Exp. 6-30-15
CIVIL
STATE OF CALIFORNIA

*THE STATE OF CALIFORNIA OR ITS OFFICERS OR AGENTS SHALL NOT BE RESPONSIBLE FOR THE ACCURACY OR COMPLETENESS OF SCANNED COPIES OF THIS PLAN SHEET.*

## 4" THERMOPLASTIC TRAFFIC STRIPE (EWNV)

| DETAIL NUMBER | LINEAR FEET |
|---|---|
| 19 | 915 |
| 22 | 2600 |
| 27B | 4270 |
| 21 | 164 |
| TOTAL | 7949 |

## THERMOPLASTIC PAVEMENT MARKING (EWNV)

| DESCRIPTION | NUMBER | SQUARE FEET |
|---|---|---|
| STOP | 1 @ 22 SQFT | 22 |
| LIMIT LINE | 1 | 40 |
| TOTAL | | 62 |

ABBREVIATION

EWNV - ENHANCED WET NIGHT VISIBILITY

## 4" THERMOPLASTIC TRAFFIC STRIPE (EWNV) (BROKEN 12-3)

| DETAIL NUMBER | LINEAR FEET |
|---|---|
| 27C | 300 |
| TOTAL | 300 |

## 4" THERMOPLASTIC TRAFFIC STRIPE (EWNV) (BROKEN 36-12)

| DETAIL NUMBER | LINEAR FEET |
|---|---|
| 19 | 915 |
| TOTAL | 915 |

## DELINEATOR, HIGHWAY POST MARKER AND OBJECT MARKER

| SHEET NUMBER | DELINEATOR (CLASS 1) | | OBJECT MARKER (TYPE L-1) | HIGHWAY POST MARKER |
|---|---|---|---|---|
| | TYPE E (EACH) | TYPE F (EACH) | (EACH) | (EACH) |
| PD-1 | 1 | | | 2 |
| PD-2 | 1 | 3 | 1 | 2 |
| SUBTOTAL | 2 | 3 | 1 | 4 |
| TOTAL | 5 | | 1 | 4 |

## PAVEMENT MARKER (RETROREFLECTIVE)

| DETAIL NUMBER | TYPE D (EACH) | TYPE G (EACH) |
|---|---|---|
| 19 | 21 | 79 |
| 22 | 110 | |
| SUBTOTAL | 131 | 79 |
| TOTAL | 210 | |

# PAVEMENT DELINEATION QUANTITIES

PDQ-1

STATE OF CALIFORNIA - DEPARTMENT OF TRANSPORTATION
Caltrans
TRAFFIC

FUNCTIONAL SUPERVISOR: SERGIO ACEVES
CALCULATED-DESIGNED BY: KRIS ALBERS
CHECKED BY: JACK KEMMERLY
REVISED BY
DATE REVISED

LAST REVISION 03-05-14
DATE PLOTTED => 08-MAY-2014
TIME PLOTTED => 14:04

| Dist | COUNTY | ROUTE | POST MILES TOTAL PROJECT | SHEET No. | TOTAL SHEETS |
|---|---|---|---|---|---|
| 03 | But | 70 | 26.7/27.1 | 32 | 83 |

Kris M. Albers 4-28-14
REGISTERED CIVIL ENGINEER DATE

4-28-14
PLANS APPROVAL DATE

REGISTERED PROFESSIONAL ENGINEER KRIS M. ALBERS No. 49986 Exp. 6-30-15 CIVIL STATE OF CALIFORNIA

*THE STATE OF CALIFORNIA OR ITS OFFICERS OR AGENTS SHALL NOT BE RESPONSIBLE FOR THE ACCURACY OR COMPLETENESS OF SCANNED COPIES OF THIS PLAN SHEET.*

## NOTES:

1. THE SIGN POST SHALL HAVE 7/16" DIAMETER PERFORATIONS 1" ON CENTER ON ALL FOUR SIDES FOR THE FULL LENGTH.
2. USE TWO DRIVE RIVETS TO FASTEN ASSEMBLED SIGN AND SIGN POST INTO ANCHOR SLEEVE. INSTALL DRIVE RIVETS INTO THE SIDES FACING TRAFFIC.
3. ALL METAL SIGN POSTS AND ANCHOR SLEEVES SHALL BE GALVANIZED.
4. ALL ANCHOR SLEEVES SHALL BE EMBEDDED IN PCC.
5. BALANCED SINGLE POST INSTALLATIONS OF SINGLE SHEET ALUMINUM PANEL SIGNS REQUIRE BACK BRACES WHEN 2'-10" OR MORE IN LENGTH.
6. WOOD BLOCK SPACERS ARE NOT REQUIRED FOR SIGNS MOUNTED ON METAL POSTS.
7. ATTACH RECTANGULAR SIGN PANEL TO SIGN POST WITH BOLTS AT TOP AND BOTTOM. CENTER MAY BE ATTACHED WITH EITHER BOLT OR 3/8" DRIVE RIVET.
8. ATTACH DIAMOND SIGN PANEL TO SIGN POST WITH BOLT AT CENTER. TOP AND BOTTOM MAY BE ATTACHED WITH EITHER BOLTS OR 3/8" DRIVE RIVETS.
9. FOR DETAILS NOT SHOWN, SEE STANDARD PLANS RS1 AND RS2.

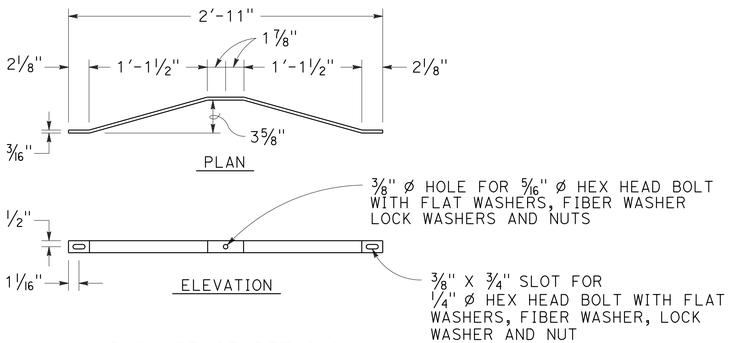


BACK BRACE DETAILS
SEE NOTE 5

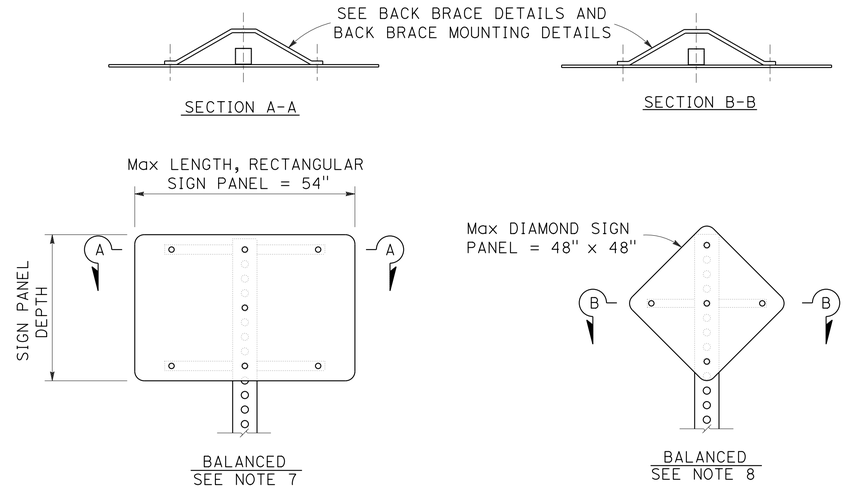


SINGLE POST INSTALLATION

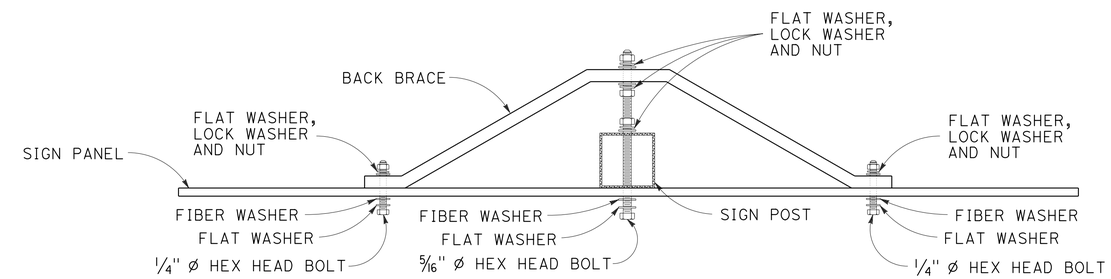


BACK BRACE MOUNTING DETAIL
SEE NOTES 6, 7 AND 8

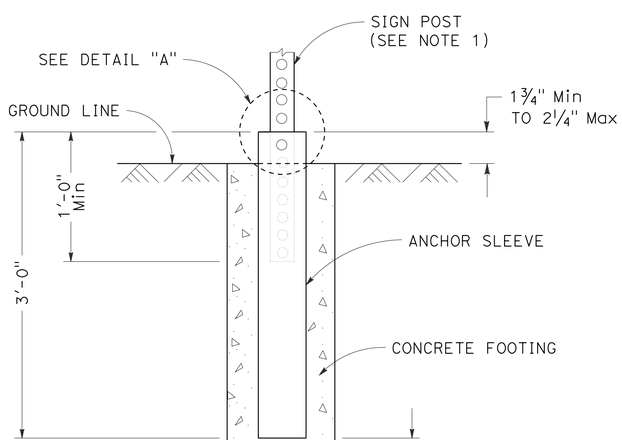


ANCHOR SLEEVE DETAIL

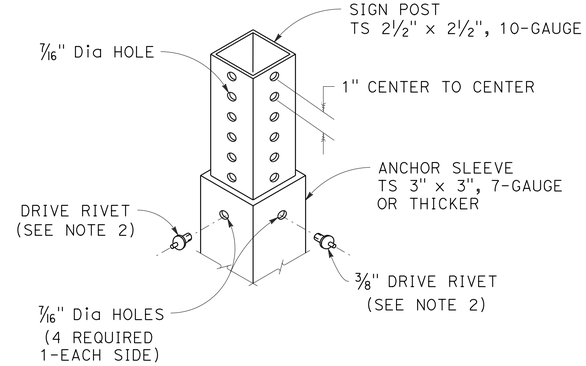


DETAIL "A"

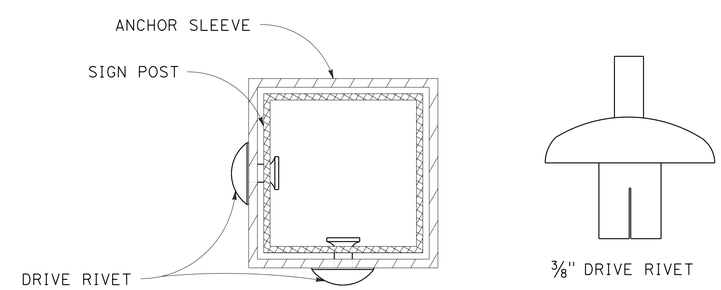


FASTENER DETAILS

# SIGN DETAILS

NO SCALE

**SD-1**

STATE OF CALIFORNIA - DEPARTMENT OF TRANSPORTATION
Caltrans
TRAFFIC

FUNCTIONAL SUPERVISOR: SERGIO ACEVES
CALCULATED-DESIGNED BY: JACK KEMMERLY
CHECKED BY: KRIS ALBERS
REVISED BY
DATE REVISED

LAST REVISION 1-17-14
DATE PLOTTED => 08-MAY-2014
TIME PLOTTED => 14:04

| Dist | COUNTY | ROUTE | POST MILES TOTAL PROJECT | SHEET No. | TOTAL SHEETS |
|---|---|---|---|---|---|
| 03 | But | 70 | 26.7/27.1 | 33 | 83 |

Kris M. Albers 4-28-14
REGISTERED CIVIL ENGINEER DATE

4-28-14
PLANS APPROVAL DATE

REGISTERED PROFESSIONAL ENGINEER
KRIS M. ALBERS
No. 49986
Exp. 6-30-15
CIVIL
STATE OF CALIFORNIA

*THE STATE OF CALIFORNIA OR ITS OFFICERS OR AGENTS SHALL NOT BE RESPONSIBLE FOR THE ACCURACY OR COMPLETENESS OF SCANNED COPIES OF THIS PLAN SHEET.*

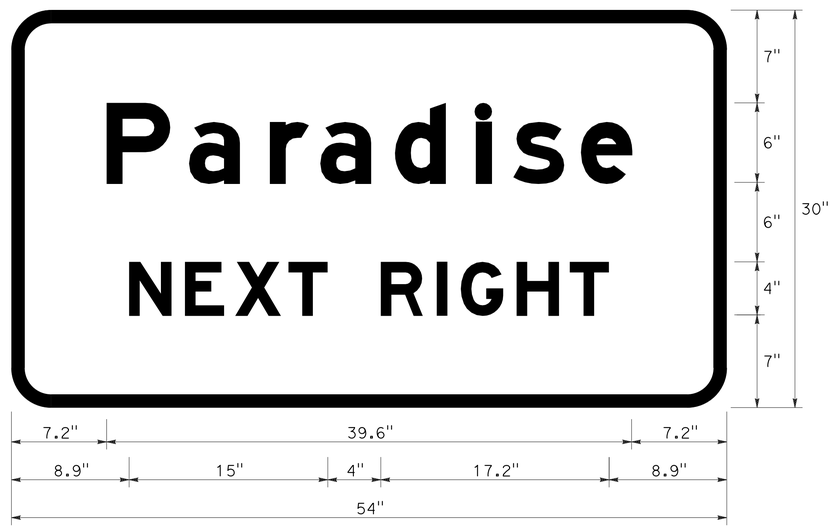


1" BORDER WITH 3" RADIUS
"Paradise" E Mod
"NEXT RIGHT" E Mod

1-1 G86-1 <CA>
Sta "A1" 669+77 FWBT

# SIGN DETAILS

NO SCALE

**SD-2**

| REVISED BY | DATE REVISED |
|---|---|
| | |

| CALCULATED-DESIGNED BY | CHECKED BY |
|---|---|
| JACK KEMMERLY | KRIS ALBERS |

FUNCTIONAL SUPERVISOR: SERGIO ACEVES

STATE OF CALIFORNIA - DEPARTMENT OF TRANSPORTATION
Caltrans
TRAFFIC

LAST REVISION 1-16-14
DATE PLOTTED => 08-MAY-2014
TIME PLOTTED => 14:05

| Dist | COUNTY | ROUTE | POST MILES TOTAL PROJECT | SHEET No. | TOTAL SHEETS |
|---|---|---|---|---|---|
| 03 | But | 70 | 26.7/27.1 | 34 | 83 |

Kris M. Albers 4-28-14
REGISTERED CIVIL ENGINEER DATE

4-28-14
PLANS APPROVAL DATE

REGISTERED PROFESSIONAL ENGINEER
KRIS M. ALBERS
No. 49986
Exp. 6-30-15
CIVIL
STATE OF CALIFORNIA

*THE STATE OF CALIFORNIA OR ITS OFFICERS OR AGENTS SHALL NOT BE RESPONSIBLE FOR THE ACCURACY OR COMPLETENESS OF SCANNED COPIES OF THIS PLAN SHEET.*

## ROADSIDE SIGN QUANTITIES

| SIGN NUMBER (SHT-NO.) | SIGN CODE FEDERAL | SIGN CODE CALIFORNIA | PANEL SIZE INCHES | "C" DIM IN FEET | POST SIZE AND LENGTH METAL POST 2½"X2½" | ROADSIDE SIGN ONE POST EA | REMOVE ROADSIDE SIGN EA | RESET ROADSIDE SIGN EA | REMARKS |
|---|---|---|---|---|---|---|---|---|---|
| 1-1 | | G86-1 | 54 x 30 | 5 | 10′ | 1 | | | |
| 1-2 | | G86-1 | | | | | 1 | | |
| 1-3 | | G8<br>G5<br>G15<br>G13 | | | | | | 1 | |
| 1-4 | M3-4 | G28-2(70) | 24 x 25<br>24 x 12 | 4 | 10′ | 1 | | | |
| 1-5 | M3-4 | G28-2(70) | | | | | 1 | | |
| | | | | | | | | | |
| 2-1 | W1-7<br>OM1-3 | | | | | | 1 | | |
| 2-2 | W1-7<br>OM1-3 | | 48 x 24<br>18 x 18 | 4 | 10′ | 1 | | | |
| 2-3 | R1-1 | | 30 | 5 | 10′ | 1 | | | |
| 2-4 | R1-1 | | | | | | 1 | | |
| 2-5 | | RNS | | | | | | 1 | SEE NOTE 4 |
| 2-6 | M3-2 | G28-2(70) | 24 x 25<br>24 x 12 | 4 | 10′ | 1 | | | |
| 2-7 | M3-2 | G28-2(70) | | | | | 1 | | |
| TOTAL | | | | | | 5 | 5 | 2 | ———— |

NOTES:

1. EXACT LOCATION AND POSITION OF ROADSIDE SIGNS TO BE DETERMINED BY THE ENGINEER.
2. POST LENGTHS GIVEN ARE APPROXIMATE.
3. "C" DIM = VERTICAL CLEARANCE EP TO BOTTOM OF SIGN PANEL.
4. RNS = COUNTY ROAD NAME SIGN

## ROADSIDE SIGN PANEL QUANTITIES

| SIGN CODE FEDERAL | SIGN CODE CALIFORNIA | SIGN MESSAGE/DESCRIPTION | PANEL SIZE L x D INCHES | PANEL AREA SQFT | NUMBER OF PANELS | BACKGROUND SHEETING COLOR | BACKGROUND RETROREFLECTIVE ASTM TYPE | LEGEND SHEETING COLOR | LEGEND RETROREFLECTIVE ASTM TYPE | PROTECTIVE OVERLAY PREMIUM | FURNISH SINGLE SHEET ALUMINUM SIGN UNFRAMED 0.063" SQFT | FURNISH SINGLE SHEET ALUMINUM SIGN UNFRAMED 0.080" SQFT |
|---|---|---|---|---|---|---|---|---|---|---|---|---|
| M3-2 | | EAST | 24 x 12 | 2.00 | 1 | GREEN | III | WHITE | III | | 2.00 | |
| M3-4 | | WEST | 24 x 12 | 2.00 | 1 | GREEN | III | WHITE | III | | 2.00 | |
| OM1-3 | | YELLOW MARKER PANEL | 18 x 18 | 2.25 | 1 | YELLOW | III | | | | 2.00 | |
| R1-1 | | STOP | 30 | 5.18 | 1 | RED | IX | WHITE | IX | X | 5.18 | |
| W1-7 | | TWO-DIRECTION ARROW | 48 x 24 | 8.00 | 1 | YELLOW | IX | BLACK | | X | | 8.00 |
| | G28-2(70) | STATE ROUTE MARKER | 24 x 25 | 4.17 | 2 | GREEN | III | WHITE | III | | 8.34 | |
| | G86-1 | SEE SIGN NUMBER 1-1 | 54 x 30 | 11.25 | 1 | GREEN | III | WHITE | IX | X | | 11.25 |
| TOTAL | | | | | | | | | | | 19.52 | 19.25 |

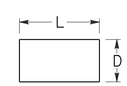


L = LENGTH OF PANEL
D = DEPTH OF PANEL

# SIGN QUANTITIES

SQ-1

STATE OF CALIFORNIA - DEPARTMENT OF TRANSPORTATION
Caltrans
TRAFFIC

FUNCTIONAL SUPERVISOR: SERGIO ACEVES
CALCULATED-DESIGNED BY: JACK KEMMERLY
CHECKED BY: KRIS ALBERS
REVISED BY
DATE REVISED

LAST REVISION 03-06-14
DATE PLOTTED => 08-MAY-2014
TIME PLOTTED => 14:05

| Dist | COUNTY | ROUTE | POST MILES TOTAL PROJECT | SHEET No. | TOTAL SHEETS |
|---|---|---|---|---|---|
| 03 | But | 70 | 26.7/27.1 | 35 | 83 |

M. A. Panchesson 4-28-14
REGISTERED CIVIL ENGINEER DATE

4-28-14
PLANS APPROVAL DATE

REGISTERED PROFESSIONAL ENGINEER M.A PANCHESSON No. 44125 Exp. 06-30-15 CIVIL STATE OF CALIFORNIA

*THE STATE OF CALIFORNIA OR ITS OFFICERS OR AGENTS SHALL NOT BE RESPONSIBLE FOR THE ACCURACY OR COMPLETENESS OF SCANNED COPIES OF THIS PLAN SHEET.*

# PAVEMENT QUANTITIES

| STAGE | LOCATION | L+ | R+ | COLD PLANE AC PAVEMENT | HMA (TYPE A) | TACK COAT | PLACE HOT MIX ASPHALT (MISCELLANEOUS AREA) | ROADWAY EXCAVATION | SHOULDER BACKING | CLASS 2 AB |
|---|---|---|---|---|---|---|---|---|---|---|
| | | | | SQYD | TON | TON | SQYD | CY | TON | CY |
| 1 | 663+00.00 TO 685+85.00 | L+ | | 2,694.0 | 413 | 1.23 | | 60.5 | 17 | 38.7 |
| 2 | 668+51.31 TO 685+85.00 | | R+ | | 16.5 | | | 37.5 | 13 | 19.7 |
| 3 | 663+00.00 TO 685+85.00 | | R+ | | 290 | 1.26 | | | | |
| 4 | 663+00.00 TO 685+85.00 | L+ | | | 294 | 1.28 | | | | |
| | PLACE HMA DIKE TABLE | | | | 6.93 | | | | | |
| | OVERSIDE DRAIN | | | | 2.14 | | 12.25 | | | |
| | HMA V-GUTTER (C-6) | | | | 4.70 | | 17.40 | | | |
| | SUBTOTAL | | | 2694.0 | 1,027.3 | 3.77 | 29.65 | 98.0 | 30 | 58.4 |
| | TOTAL | | | 2,694.0 | 1,027.3 | 3.77 | 29.65 | 98.0 | 30 | 58.4 |

# CRACK TREATMENT

| STATION LIMITS | DIRECTION | CRACK TREATMENT LNMI |
|---|---|---|
| "A1" 663+00.00 TO 685+85.00 | EB | 0.43 |
| | | |
| TOTAL | | 0.43 |

# VEGETATION CONTROL (MINOR Conc)

| LOCATION | SIDE R+/L+ | SQYD |
|---|---|---|
| STAGE 1 PENTZ OH | L+ | 101.1 |
| STAGE 1 CHEROKEE OH | L+ | 95.0 |
| STAGE 2 PENTZ OH | R+ | 99.0 |
| STAGE 2 CHEROKEE OH | R+ | 115.6 |
| | | |
| TOTAL | | 410.7 |

# TREATED WOOD WASTE

| LOCATION | LBS |
|---|---|
| FROM REMOVE GUARDRAIL | 10,884 |
| TOTAL | 10,884 |

# MARKER (CULVERT)

| LOCATION | REMOVE CULVERT MARKER (N) | MARKER (CULVERT) |
|---|---|---|
| | EA | EA |
| "A1" 172+87.42 L+ 20.0' | | 1 |
| "A1" 172+88.68 R+ 19.0' | 1 | 1 |
| TOTAL | 1 | 2 |

(N) NOT A SEPARATE PAY ITEM, FOR INFORMATION ONLY

# TEMPORARY FENCE

| LOCATION | LF |
|---|---|
| "A1" L+ Sta 670+54.38 TO 670+77.98 | 162.0 |
| "A1" R+ Sta 671+92.98 TO 673+18.67 | 172.0 |
| "A1" L+ Sta 678+99.61 TO 679+69.69 | 185.0 |
| "A1" L+ Sta 687+38.48 TO 689+50.00 | 475.0 |
| TOTAL | 994.0 |

# PLACE HMA DIKE

| STATION | SIDE R+/L+ | HMA DIKE TYPE C | HMA DIKE TYPE F | HMA DIKE (N) *HMA (TYPE A) |
|---|---|---|---|---|
| | | LF | LF | TON |
| "A1" 669+44.36 TO 670+58.92 | L+ | 78.13 | 36.43 | 1.13 |
| "A1" 669+51.08 TO 670+29.20 | R+ | 78.13 | 36.37 | 1.13 |
| "A1" 672+21.58 TO 674+48.90 | L+ | 191.27 | 36.37 | 2.03 |
| "A1" 679+13.98 TO 680+18.86 | L+ | 67.95 | 37.50 | 1.06 |
| "A1" 679+25.48 TO 680+39.75 | R+ | | 114.24 | 1.58 |
| SUBTOTAL | | 415.48 | 260.91 | 6.93 |
| TOTAL | | 415.48 | 260.91 | 6.93 |

* QUANTITY INCLUDED IN PAVEMENT QUANTITIES

# REMOVE DOWNDRAIN

| LOCATION | EA |
|---|---|
| "A1" L+ Sta 672+23.09 | 1 |
| TOTAL | 1 |

# MIDWEST GUARDRAIL SYSTEM

| STATION | DIRECTION | LOCATION | REMOVE GUARDRAIL | MIDWEST GUARDRAIL SYSTEM (STEEL POST) | ALTERNATIVE IN-LINE TERMINAL SYSTEM (TYPE 31) | ALTERNATIVE FLARED END TERMINAL SYSTEM (TYPE 31) | TRANSITION RAILING (TYPE WB-31) | END CAP (TYPE TC) | (N) MGS TYPE |
|---|---|---|---|---|---|---|---|---|---|
| | | | LF | LF | EA | EA | EA | EA | |
| 669+69.36 TO 670+59.99 | WB | L+ | 75.00 | 12.5 | 1 | | 1 | 1 | 12AA |
| 669+76.07 TO 670+66.70 | EB | R+ | 75.00 | 12.5 | 1 | | 1 | 1 | 12A |
| 672+20.45 TO 673+10.32 | WB | L+ | 75.00 | 12.5 | 1 | | 1 | 1 | 12A |
| 672+26.53 TO 673+03.19 | EB | R+ | 75.00 | - | 1 | | 1 | 1 | 12AA |
| 679+47.07 TO 680+18.86 | WB | L+ | 75.00 | 12.5 | | 1 | 1 | 1 | 12BB |
| 678+93.71 TO 680+40.46 | EB | R+ | 285.00 | 87.5 | | 1 | 1 | 1 | 12B |
| 682+09.44 TO 683+00.06 | WB | L+ | 75.00 | 12.5 | 1 | | 1 | 1 | 12A |
| 682+29.57 TO 683+20.19 | EB | R+ | 75.00 | 12.5 | 1 | | 1 | 1 | 12AA |
| SUBTOTAL | | | 810.00 | 162.5 | 6 | 2 | 8 | 8 | |
| TOTAL | | | 810.00 | 162.5 | 6 | 2 | 8 | 8 | |

(N) NOT A SEPARATE PAY ITEM, FOR INFORMATION ONLY

# TEMPORARY RAILING (TYPE K)/ ALTERNATIVE TEMPORARY CRASH CUSHIONS

| STAGE | LOCATION | Temp RAILING (TYPE K) | ALTERNATIVE TEMPORARY CRASH CUSHION |
|---|---|---|---|
| | | LF | (EA) |
| 1 | STA 668+83.36 TO 674+83.36 L+ | 600 | 2 |
| | STA 688+66.80 TO 683+46.88 L+ | 480 | 2 |
| 2 | STA 678+83.66 TO 673+23.36 R+ | 440 | 2 |
| | STA 678+46.55 TO 683+45.36 R+ | 580 | 1 |
| | TOTAL | 2,100 | 7 |

# OVERSIDE DRAIN

| STATION | SIDE | PLACE HOT MIX ASPHALT * (MISCELLANEOUS AREA) | HMA (TYPE A) * | RSP (No.2 , METHOD B) | RSP FABRIC (CLASS 8) |
|---|---|---|---|---|---|
| | R+/L+ | SQYD | TON | CY | SQYD |
| "A1" 669+15.93 | L+ | 7.15 | 1.25 | 2.25 | 4.5 |
| "A1" 669+41.08 | R+ | 5.10 | 0.89 | 2.25 | 4.5 |
| TOTAL | | 12.25 | 2.14 | 4.50 | 9.0 |

* QUANTITY INCLUDED IN PAVEMENT QUANTITIES

# SUMMARY OF QUANTITIES

Q-1

STATE OF CALIFORNIA - DEPARTMENT OF TRANSPORTATION
Caltrans® DESIGN
FUNCTIONAL SUPERVISOR: ALI KIANI
CALCULATED-DESIGNED BY: DAVID ROBERTS
CHECKED BY: MIKE PANCHESSON
REVISED BY / DATE REVISED

LAST REVISION 01-30-14
DATE PLOTTED => 08-MAY-2014 14:05

| Dist | COUNTY | ROUTE | POST MILES TOTAL PROJECT | SHEET No. | TOTAL SHEETS |
|---|---|---|---|---|---|
| 03 | But | 70 | 26.7/27.1 | 36 | 83 |

LICENSED LANDSCAPE ARCHITECT

4-28-14
PLANS APPROVAL DATE

LICENSED LANDSCAPE ARCHITECT JANE H. DONOHOE No. 5824 Signature 08-31-14 Renewal Date 07-17-12 Date STATE OF CALIFORNIA

*THE STATE OF CALIFORNIA OR ITS OFFICERS OR AGENTS SHALL NOT BE RESPONSIBLE FOR THE ACCURACY OR COMPLETENESS OF SCANNED COPIES OF THIS PLAN SHEET.*

NOTE:

1. FOR ACCURATE RIGHT OF WAY DATA, CONTACT RIGHT OF WAY ENGINEERING AT THE DISTRICT OFFICE.

LEGEND

EROSION CONTROL TYPE 1

## EROSION CONTROL TYPE 1

| SEQUENCE | ITEM | MATERIAL | | APPLICATION RATE | DEPTH |
|---|---|---|---|---|---|
| | | DESCRIPTION | TYPE | | |
| STEP 1 | COMPOST | COMPOST | MEDIUM | 130 CY/ACRE | |
| STEP 2 | INCORPORATE | | | 2 TONS/ACRE | 3" |

## EROSION CONTROL

| SHEET | DESCRIPTION | COMPOST | INCORPORATE MATERIALS |
|---|---|---|---|
| | | SQFT | SQFT |
| ECQ-1 | EROSION CONTROL TYPE 1 | 12,447.4 | 12,447 |
| | TOTAL | 12,447.4 | 12,447 |

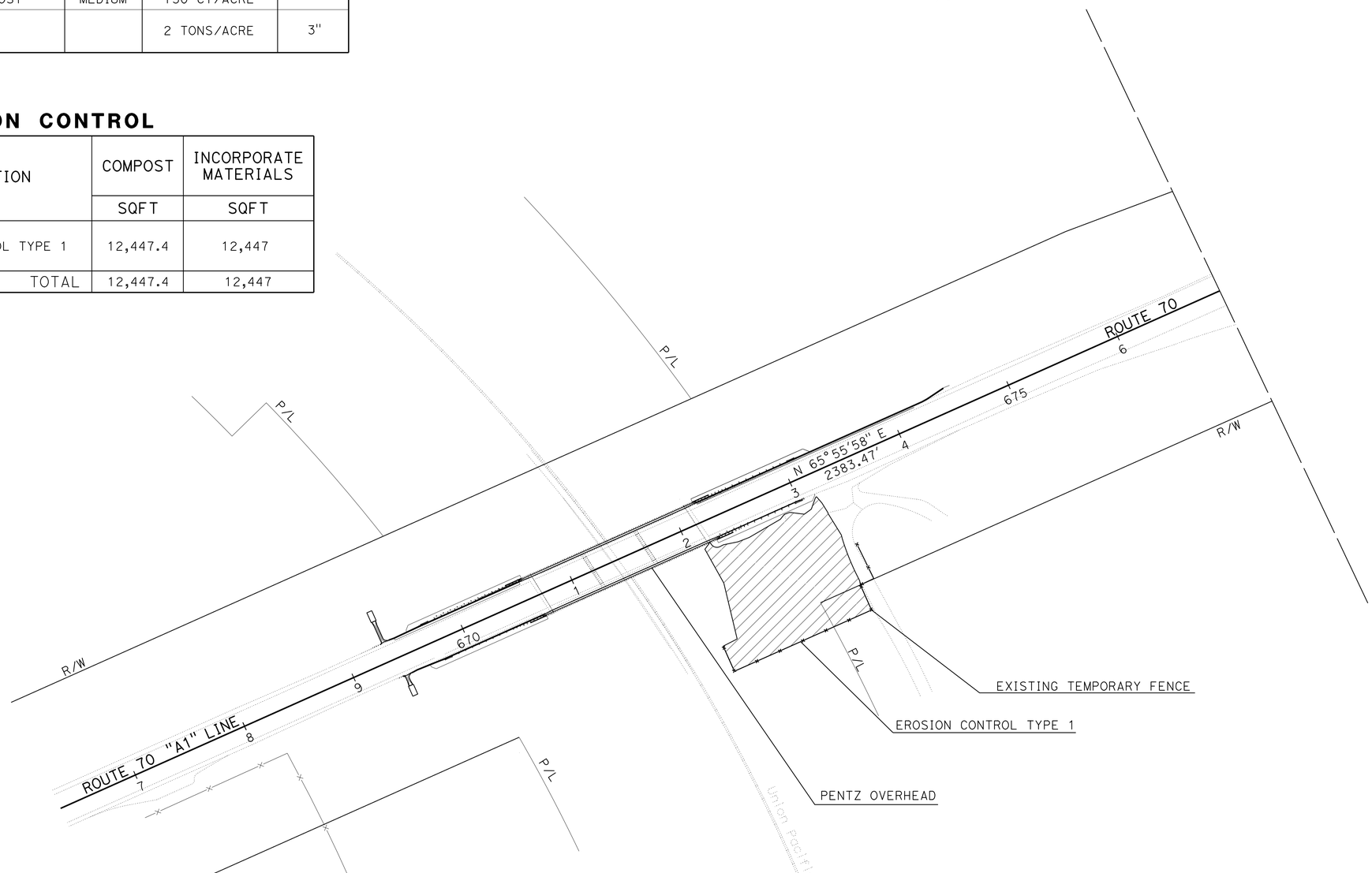


*APPROVED FOR EROSION CONTROL WORK ONLY*

# EROSION CONTROL PLAN AND QUANTITIES

SCALE: 1"=50'

**EC-1**

STATE OF CALIFORNIA - DEPARTMENT OF TRANSPORTATION
Caltrans
LANDSCAPE
SENIOR LANDSCAPE ARCHITECT: T. CHRIS JOHNSON
CALCULATED-DESIGNED BY: J. DONOHOE
CHECKED BY: C. JOHNSON
REVISED BY
DATE REVISED

LAST REVISION 03-08-14
DATE PLOTTED => 09-MAY-2014
TIME PLOTTED => 10:19

## M

| | |
|---|---|
| Maint | MAINTENANCE |
| Max | MAXIMUM |
| MB | METAL BEAM |
| MBB | METAL BEAM BARRIER |
| MBGR | METAL BEAM GUARD RAILING |
| Med | MEDIAN |
| MGS | MIDWEST GUARDRAIL SYSTEM |
| MH | MANHOLE |
| Min | MINIMUM |
| Misc | MISCELLANEOUS |
| Misc I & S | MISCELLANEOUS IRON AND STEEL |
| Mkr | MARKER |
| Mod | MODIFIED, |
| | MODIFY |
| Mon | MONUMENT |
| MP | METAL PLATE |
| MPGR | METAL PLATE GUARD RAILING |
| MR | MOVEMENT RATING |
| MSE | MECHANICALLY STABILIZED EMBANKMENT |
| Mt | MOUNTAIN, MOUNT |
| Mtl | MATERIAL |
| MVP | MAINTENANCE VEHICLE PULLOUT |

## N

| | |
|---|---|
| N | NORTH |
| NB | NORTHBOUND |
| No. | NUMBER (MUST HAVE PERIOD) |
| Nos. | NUMBERS (MUST HAVE PERIOD) |
| NPS | NOMINAL PIPE SIZE |
| NS | NEAR SIDE |
| NSP | NEW STANDARD PLAN |
| NTS | NOT TO SCALE |

## O

| | |
|---|---|
| Oblr | OBLITERATE |
| OC | OVERCROSSING |
| OD | OUTSIDE DIAMETER |
| OF | OUTSIDE FACE |
| OG | ORIGINAL GROUND |
| OGAC | OPEN GRADED ASPHALT CONCRETE |
| OGFC | OPEN GRADED FRICTION COURSE |
| OH | OVERHEAD |
| OHWM | ORDINARY HIGH WATER MARK |
| O-O | OUT TO OUT |
| Opp | OPPOSITE |
| OSD | OVERSIDE DRAIN |

## P

| | |
|---|---|
| p | PAGE |
| PAP | PERFORATED ALUMINUM PIPE |
| PB | PULL BOX |
| PC | POINT OF CURVATURE, |
| | PRECAST |
| PCC | POINT OF COMPOUND CURVE, |
| | PORTLAND CEMENT CONCRETE |
| PCMS | PORTABLE CHANGEABLE MESSAGE SIGN |
| PCP | PERFORATED CONCRETE PIPE, |
| | PRESTRESSED CONCRETE PIPE |
| PCVC | POINT OF COMPOUND VERTICAL CURVE |
| PEC | PERMIT TO ENTER AND CONSTRUCT |
| Ped | PEDESTRIAN |
| Ped OC | PEDESTRIAN OVERCROSSING |
| Ped UC | PEDESTRIAN UNDERCROSSING |
| Perm Mtl | PERMEABLE MATERIAL |

## P continued

| | |
|---|---|
| PG | PROFILE GRADE |
| PI | POINT OF INTERSECTION |
| PJP | PARTIAL JOINT PENETRATION |
| Pkwy | PARKWAY |
| ℙ,PL | PLATE |
| P/L | PROPERTY LINE |
| PM | POST MILE, |
| | TIME FROM NOON TO MIDNIGHT |
| PN | PAVING NOTCH |
| POC | POINT OF HORIZONTAL CURVE |
| POT | POINT OF TANGENT |
| POVC | POINT OF VERTICAL CURVE |
| PP | PIPE PILE, |
| | PLASTIC PIPE, |
| | POWER POLE |
| PPL | PREFORMED PERMEABLE LINER |
| PPP | PERFORATED PLASTIC PIPE |
| PRC | POINT OF REVERSE CURVE |
| PRF | PAVEMENT REINFORCING FABRIC |
| PRVC | POINT OF REVERSE VERTICAL CURVE |
| PS&E | PLANS, SPECIFICATIONS AND ESTIMATES |
| PS, P/S | PRESTRESSED |
| PSP | PERFORATED STEEL PIPE |
| PT | POINT OF TANGENCY |
| PVC | POLYVINYL CHLORIDE |
| Pvmt | PAVEMENT |

## Q

| | |
|---|---|
| Qty | QUANTITY |

## R

| | |
|---|---|
| R | RADIUS |
| R & D | REMOVE AND DISPOSE |
| R & S | REMOVE AND SALVAGE |
| R/C | RATE OF CHANGE |
| RCA | REINFORCED CONCRETE ARCH |
| RCB | REINFORCED CONCRETE BOX |
| RCP | REINFORCED CONCRETE PIPE |
| RCPA | REINFORCED CONCRETE PIPE ARCH |
| Rd | ROAD |
| Reinf | REINFORCED, |
| | REINFORCEMENT, |
| | REINFORCING |
| Rel | RELOCATE |
| Repl | REPLACEMENT |
| Ret | RETAINING |
| Rev | REVISED, REVISION |
| Rdwy | ROADWAY |
| RHMA | RUBBERIZED HOT MIX ASPHALT |
| Riv | RIVER |
| RM | ROAD-MIXED |
| RP | RADIUS POINT, |
| | REFERENCE POINT |
| RR | RAILROAD |
| RSP | ROCK SLOPE PROTECTION, |
| | REVISED STANDARD PLAN |
| Rt | RIGHT |
| Rte | ROUTE |
| RW | REDWOOD, |
| | RETAINING WALL |
| R/W | RIGHT OF WAY |
| Rwy | RAILWAY |

## S

| | |
|---|---|
| S | SOUTH, |
| | SUPPLEMENT |
| SAE | STRUCTURE APPROACH EMBANKMENT |
| Salv | SALVAGE |
| SAPP | STRUCTURAL ALUMINUM PLATE PIPE |
| SB | SOUTHBOUND |
| SC | SAND CUSHION |
| SCSP | SLOTTED CORRUGATED STEEL PIPE |
| SD | STORM DRAIN |
| Sec | SECOND, |
| | SECTION |
| Sep | SEPARATION |
| SG | SUBGRADE |
| Shld | SHOULDER |
| Sht | SHEET |
| Sim | SIMILAR |
| ℄ | STATION LINE |
| SM | SELECTED MATERIAL |
| Spec | SPECIAL, |
| | SPECIFICATIONS |
| SPP | SLOTTED PLASTIC PIPE |
| SS | SLOPE STAKE |
| SSBM | STRAP AND SADDLE BRACKET METHOD |
| SSD | STRUCTURAL SECTION DRAIN |
| SSPA | STRUCTURAL STEEL PLATE ARCH |
| SSPP | STRUCTURAL STEEL PLATE PIPE |
| SSPPA | STRUCTURAL STEEL PLATE PIPE ARCH |
| SSRP | STEEL SPIRAL RIB PIPE |
| St | STREET |
| Sta | STATION |
| STBB | SINGLE THRIE BEAM BARRIER |
| Std | STANDARD |
| Str | STRUCTURE |
| Surf | SURFACING |
| SW | SIDEWALK, |
| | SOUND WALL |
| Swr | SEWER |
| Sym | SYMMETRICAL |
| S4S | SURFACE 4 SIDES |

## T

| | |
|---|---|
| T | SEMI-TANGENT |
| Tan | TANGENT |
| TBB | THRIE BEAM BARRIER |
| Tbr | TIMBER |
| TC | TOP OF CURB |
| TCB | TRAFFIC CONTROL BOX |
| TCE | TEMPORARY CONSTRUCTION EASEMENT |
| Tel | TELEPHONE |
| Temp | TEMPORARY |
| TG | TOP OF GRADE |
| Tot | TOTAL |
| TP | TELEPHONE POLE |
| TPB | TREATED PERMEABLE BASE |
| TPM | TREATED PERMEABLE MATERIAL |
| Trans | TRANSITION |

## T continued

| | |
|---|---|
| TS | TRANSVERSE, |
| | TRAFFIC SIGNAL, |
| | TUBULAR STEEL |
| Typ | TYPICAL |

## U

| | |
|---|---|
| UC | UNDERCROSSING |
| UD | UNDERDRAIN |
| UG | UNDERGROUND |
| UON | UNLESS OTHERWISE NOTED |
| UP | UNDERPASS |

## V

| | |
|---|---|
| V | VALVE, |
| | DESIGN SPEED |
| Var | VARIABLE, |
| | VARIES |
| VC | VERTICAL CURVE |
| VCP | VITRIFIED CLAY PIPE |
| Vert | VERTICAL |
| Via | VIADUCT |
| Vol | VOLUME |

## W

| | |
|---|---|
| W | WEST, |
| | WIDTH |
| WB | WESTBOUND |
| WH | WEEP HOLE |
| WM | WIRE MESH |
| WS | WATER SURFACE |
| WSP | WELDED STEEL PIPE |
| Wt | WEIGHT |
| WV | WATER VALVE |
| WW | WINGWALL |
| WWLOL | WINGWALL LAYOUT LINE |

## X

| | |
|---|---|
| X Sec | CROSS SECTION |
| Xing | CROSSING |

## Y

| | |
|---|---|
| Yr | YEAR |
| Yrs | YEARS |

| Dist | COUNTY | ROUTE | POST MILES TOTAL PROJECT | SHEET No. | TOTAL SHEETS |
|---|---|---|---|---|---|
| 03 | But | 70 | 26.7/27.1 | 37 | 83 |

Grace M. Tsushima
REGISTERED CIVIL ENGINEER

July 19, 2013
PLANS APPROVAL DATE

REGISTERED PROFESSIONAL ENGINEER Grace M. Tsushima No. C49814 Exp. 9-30-14 CIVIL STATE OF CALIFORNIA

*THE STATE OF CALIFORNIA OR ITS OFFICERS OR AGENTS SHALL NOT BE RESPONSIBLE FOR THE ACCURACY OR COMPLETENESS OF SCANNED COPIES OF THIS PLAN SHEET.*

TO ACCOMPANY PLANS DATED 4-28-14

**UNIT OF MEASUREMENT SYMBOLS:**

Some of the symbols used in the project plan quantity tables and in the Bid Item List are:

TABLE A

| SYMBOL USED | DEFINITIONS |
|---|---|
| ACRE | ACRE |
| CF | CUBIC FOOT |
| CY | CUBIC YARD |
| EA | EACH |
| GAL | GALLON |
| LB | POUND |
| LF | LINEAR FOOT |
| SQFT | SQUARE FOOT |
| SQYD | SQUARE YARD |
| STA | 100 FEET |
| TAB | TABLET |
| TON | 2,000 POUNDS |

Some of the symbols used in the plans other than in the project plan quantity tables are:

TABLE B

| SYMBOL USED | DEFINITIONS |
|---|---|
| ksi | KIPS PER SQUARE INCH |
| ksf | KIPS PER SQUARE FOOT |
| psi | POUNDS PER SQUARE INCH |
| psf | POUNDS PER SQUARE FOOT |
| $lb/ft^3$, pcf | POUNDS PER CUBIC FOOT |
| tsf | TONS PER SQUARE FOOT |
| mph, MPH * | MILES PER HOUR |
| ø | NOMINAL DIAMETER |
| oz | OUNCE |
| lb | POUND |
| kip | 1,000 POUNDS |
| cal | CALORIE |
| ft | FOOT OR FEET |
| gal | GALLON |

* For use on a sign panel only

STATE OF CALIFORNIA
DEPARTMENT OF TRANSPORTATION

# ABBREVIATIONS (SHEET 2 OF 2)

NO SCALE

RSP A10B DATED JULY 19, 2013 SUPERSEDES STANDARD PLAN A10B DATED MAY 20, 2011 - PAGE 2 OF THE STANDARD PLANS BOOK DATED 2010.

**REVISED STANDARD PLAN RSP A10B**

**2010 REVISED STANDARD PLAN RSP A10B**

6-7-13

| Dist | COUNTY | ROUTE | POST MILES TOTAL PROJECT | SHEET No. | TOTAL SHEETS |
|---|---|---|---|---|---|
| 03 | But | 70 | 26.7/27.1 | 38 | 83 |

REGISTERED CIVIL ENGINEER

July 20, 2012
PLANS APPROVAL DATE

REGISTERED PROFESSIONAL ENGINEER
Roberta L. McLaughlin
No. C40375
Exp. 3-31-13
CIVIL
STATE OF CALIFORNIA

*THE STATE OF CALIFORNIA OR ITS OFFICERS OR AGENTS SHALL NOT BE RESPONSIBLE FOR THE ACCURACY OR COMPLETENESS OF SCANNED COPIES OF THIS PLAN SHEET.*

TO ACCOMPANY PLANS DATED 4-28-14

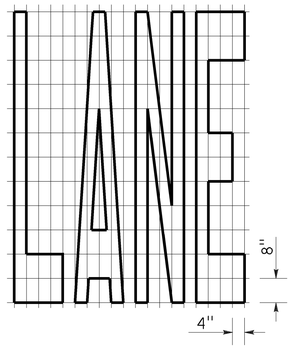


A=24 ft$^2$

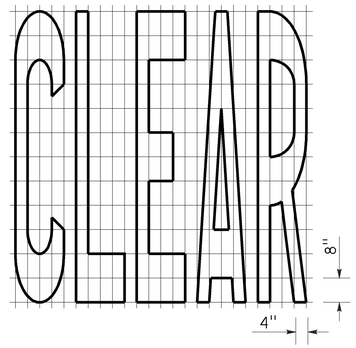


A=27 ft$^2$

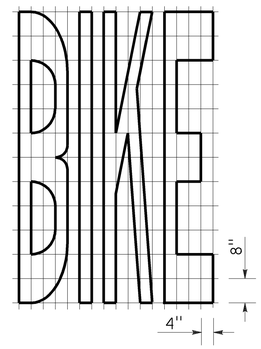


A=21 ft$^2$

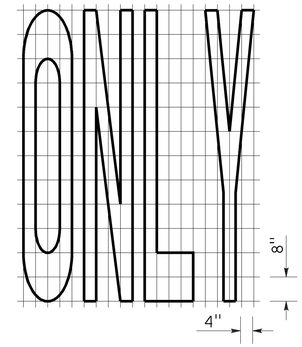


A=22 ft$^2$

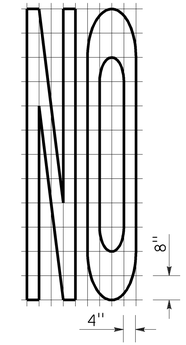


A=14 ft$^2$

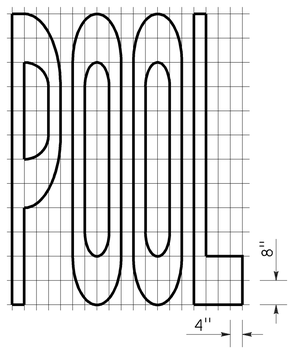


A=23 ft$^2$

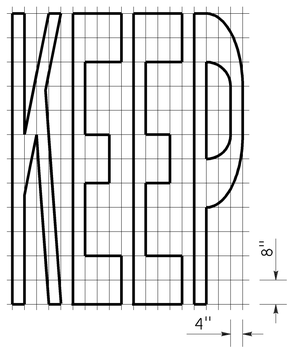


A=24 ft$^2$

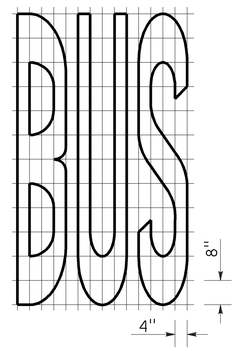


A=20 ft$^2$

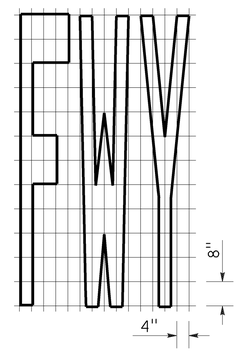


A=16 ft$^2$

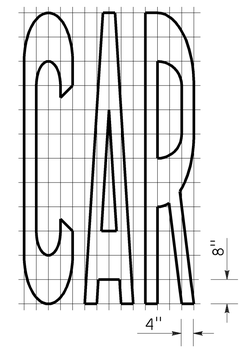


A=17 ft$^2$

| WORD MARKINGS | | | |
|---|---|---|---|
| ITEM | ft$^2$ | ITEM | ft$^2$ |
| LANE | 24 | NO | 14 |
| POOL | 23 | BIKE | 21 |
| CAR | 17 | BUS | 20 |
| CLEAR | 27 | ONLY | 22 |
| KEEP | 24 | FWY | 16 |

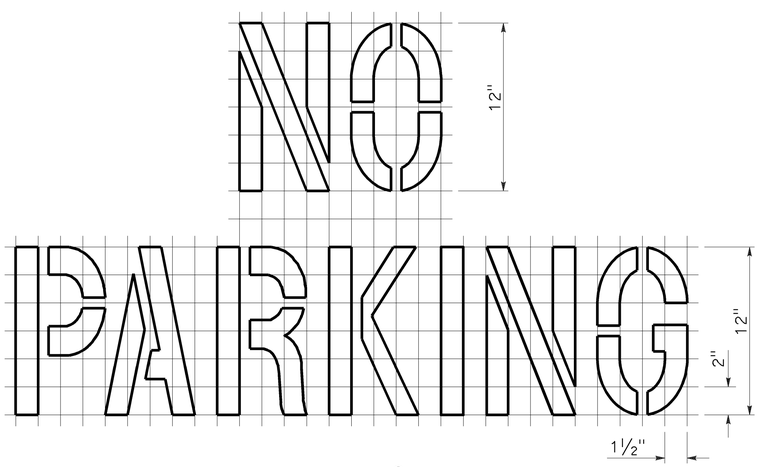


A=2 ft$^2$
See Notes 6 and 7

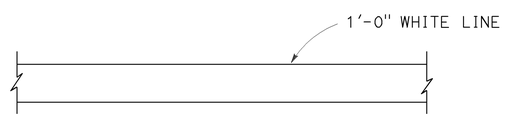


LIMIT LINE (STOP LINE)

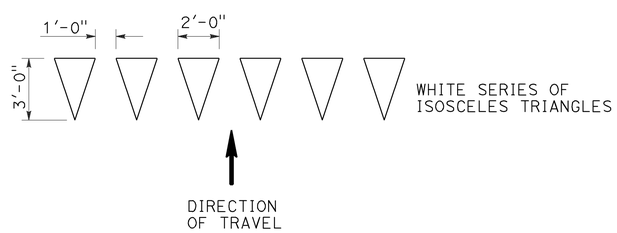


YIELD LINE

NOTES:

1. If a message consists of more than one word, it should read "UP", i.e., the first word should be nearest the driver.
2. The space between words should be at least four times the height of the characters for low speed roads, but not more than ten times the height of the characters. The space may be reduced appropriately where there is limited space because of local conditions.
3. Minor variations in dimensions may be accepted by the Engineer.
4. Portions of a letter, number or symbol may be separated by connecting segments not to exceed 2" in width.
5. The words "NO PARKING" pavement marking is to be used for parking facilities. For typical locations of markings, see Standard Plans A90A and A90B.
6. The words "NO PARKING", shall be painted in white letters no less than 1'-0" high on a contrasting background and located so that it is visible to traffic enforcement officials.

STATE OF CALIFORNIA
DEPARTMENT OF TRANSPORTATION

# PAVEMENT MARKINGS
# WORDS, LIMIT AND YIELD LINES

NO SCALE

RSP A24E DATED JULY 20, 2012 SUPERSEDES STANDARD PLAN A24E
DATED MAY 20, 2011 - PAGE 17 OF THE STANDARD PLANS BOOK DATED 2010.

**REVISED STANDARD PLAN RSP A24E**

**2010 REVISED STANDARD PLAN RSP A24E**

6-12-12

| Dist | COUNTY | ROUTE | POST MILES TOTAL PROJECT | SHEET No. | TOTAL SHEETS |
|---|---|---|---|---|---|
| 03 | But | 70 | 26.7/27.1 | 39 | 83 |

Randell D. Hiatt
REGISTERED CIVIL ENGINEER

July 19, 2013
PLANS APPROVAL DATE

REGISTERED PROFESSIONAL ENGINEER
Randell D. Hiatt
No. C50200
Exp. 6-30-15
CIVIL
STATE OF CALIFORNIA

*THE STATE OF CALIFORNIA OR ITS OFFICERS OR AGENTS SHALL NOT BE RESPONSIBLE FOR THE ACCURACY OR COMPLETENESS OF SCANNED COPIES OF THIS PLAN SHEET.*

TO ACCOMPANY PLANS DATED 4-28-14

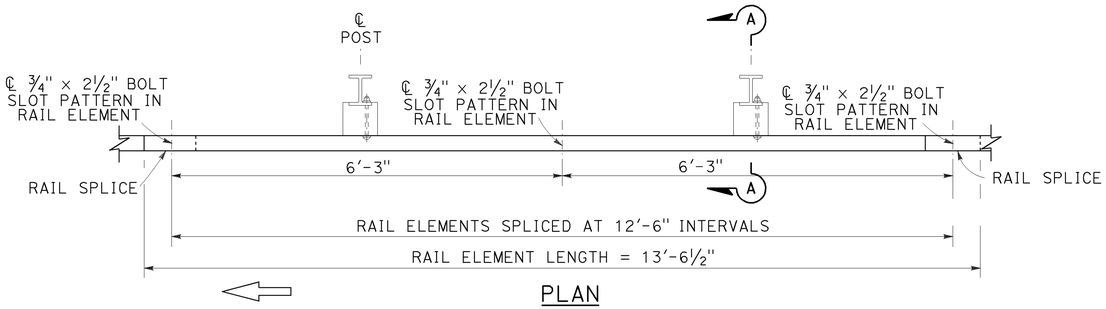


PLAN

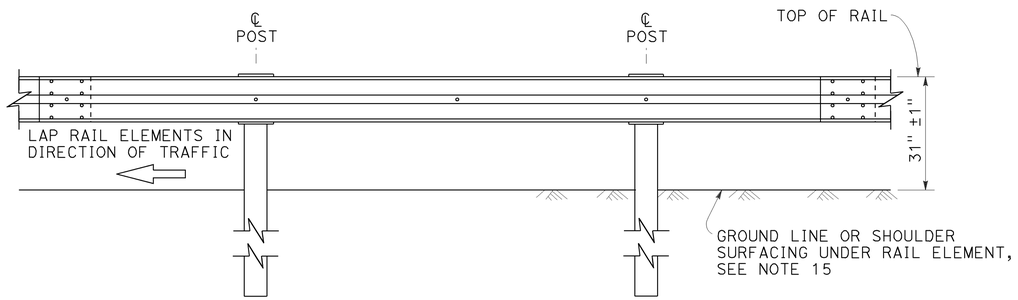


ELEVATION

## MIDWEST GUARDRAIL SYSTEM WITH STEEL POSTS AND NOTCHED WOOD OR NOTCHED RECYCLED PLASTIC BLOCKS

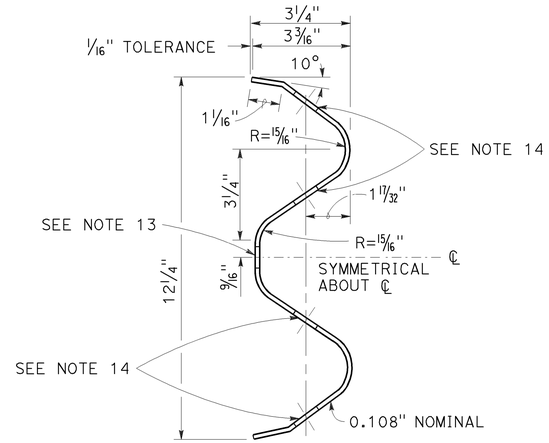


SECTION THRU RAIL ELEMENT

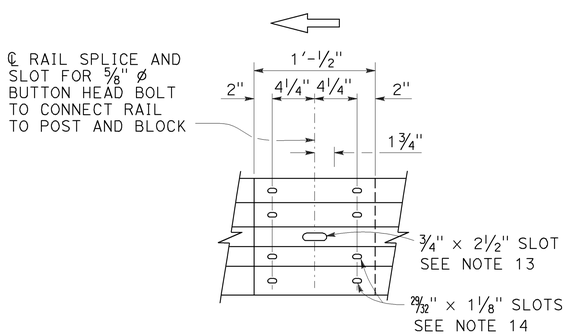


ELEVATION

## RAIL ELEMENT SPLICE DETAIL

a) Connect the over lapped end of the rail elements with ⅝" ø × 1⅜" button head oval shoulder splice bolts inserted into the 29⁄32" × 1⅛" slots and bolted together with ⅝" ø recessed hex nuts. Recess of hex nut points toward rail element. A total of 8 bolts and nuts are to be used at each rail splice connection.

b) The ends of the rail elements are to be overlapped in the direction of traffic (see details).

c) Where end cap is to be attached to the end of a rail element, a total of 4 of the above described splice bolts and nuts are to be used.

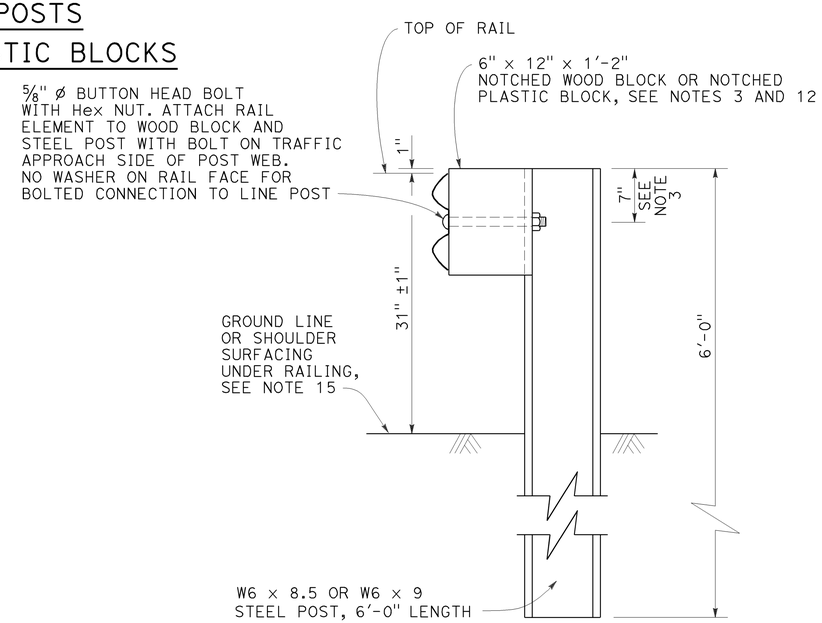


SECTION A-A

## TYPICAL STEEL LINE POST INSTALLATION

See Note 4

NOTES:

1. For details of wood post installations, see Revised Standard Plan RSP A77L1.
2. For details of standard hardware used to construct MGS, see Revised Standard Plan RSP A77M1.
3. For details of steel posts and notched wood blocks used to construct MGS, see Revised Standard Plan RSP A77N2.
4. For additional installation details, see Revised Standard Plan RSP A77N3.
5. MGS post spacing to be 6'-3" center to center, except as otherwise noted.
6. For MGS typical layouts, see the A77P, A77Q and A77R Series of Standard Plans.
7. If railing is connected to terminal system end treatment, use 31" height terminal system end treatment.
8. For MGS end anchor details, see Revised Standard Plans RSP A77S1 and RSP A77T2.
9. For details of MGS transition to bridge railing, see Revised Standard Plan RSP A77U4.
10. For additional details of MGS connection to bridge railings, see Revised Standard Plans RSP A77U1, RSP A77U2 and RSP A77V1.
11. For dike positioning and MGS delineation details, see Revised Standard Plan RSP A77N4.
12. Notched face of block faces steel post.
13. Slotted hole for bolted connection of rail element to block and post. See "Section Thru Rail Element".
14. Slotted holes for splice bolts to overlap ends of rail element. See "Section Thru Rail Element".
15. Install posts in soil.

STATE OF CALIFORNIA
DEPARTMENT OF TRANSPORTATION

# MIDWEST GUARDRAIL SYSTEM STANDARD RAILING SECTION (STEEL POST WITH NOTCHED WOOD OR NOTCHED RECYCLED PLASTIC BLOCK)

NO SCALE

RSP A77L2 DATED JULY 19, 2013 SUPPLEMENTS THE STANDARD PLANS BOOK DATED 2010.

**REVISED STANDARD PLAN RSP A77L2**

**2010 REVISED STANDARD PLAN RSP A77L2**

7-3-13

| Dist | COUNTY | ROUTE | POST MILES TOTAL PROJECT | SHEET No. | TOTAL SHEETS |
|---|---|---|---|---|---|
| 03 | But | 70 | 26.7/27.1 | 40 | 83 |

Randell D. Hiatt
REGISTERED CIVIL ENGINEER

July 19, 2013
PLANS APPROVAL DATE

REGISTERED PROFESSIONAL ENGINEER
Randell D. Hiatt
No. C50200
Exp. 6-30-15
CIVIL
STATE OF CALIFORNIA

*THE STATE OF CALIFORNIA OR ITS OFFICERS OR AGENTS SHALL NOT BE RESPONSIBLE FOR THE ACCURACY OR COMPLETENESS OF SCANNED COPIES OF THIS PLAN SHEET.*

TO ACCOMPANY PLANS DATED 4-28-14

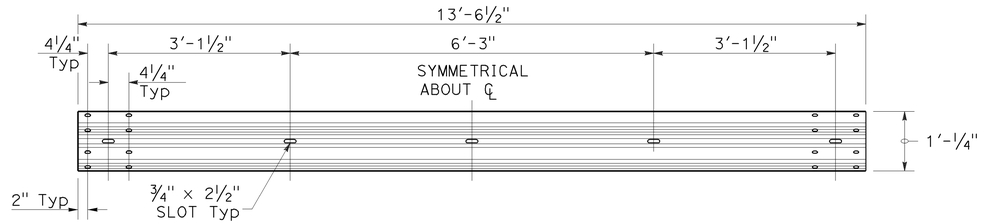


TYPICAL RAIL ELEMENT

NOTE:

1. Slotted holes for splice bolts to overlap ends of rail element.

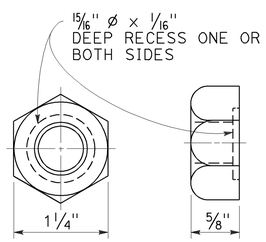


⅝" Ø RECESS NUT

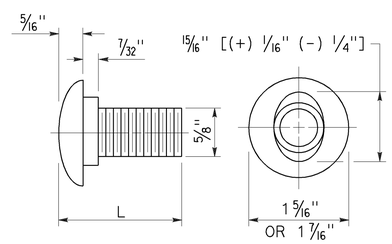


⅝" Ø BUTTON HEAD BOLT

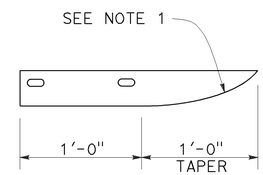


PLAN

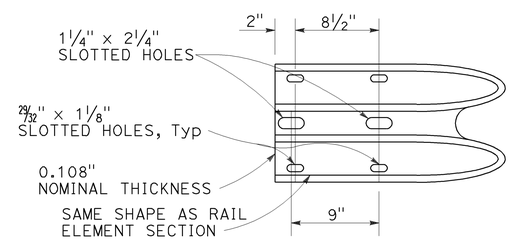


ELEVATION

END CAP
(TYPE A)

BUTTON HEAD BOLT

| L | THREAD LENGTH |
|---|---|
| 1⅜" | FULL THREAD LENGTH |
| 2" | FULL THREAD LENGTH |
| 10" | 4" Min THREAD LENGTH |
| 18" | 4" Min THREAD LENGTH |
| 20" | 4" Min THREAD LENGTH |
| 22" | 4" Min THREAD LENGTH |
| 26" | 4" Min THREAD LENGTH |
| 36" | 4" Min THREAD LENGTH |
| ** 2¾" | 2" Min THREAD LENGTH |
| ** 19" | 4" Min THREAD LENGTH |

** For nested rail applications.

STATE OF CALIFORNIA
DEPARTMENT OF TRANSPORTATION

# MIDWEST GUARDRAIL SYSTEM STANDARD HARDWARE

NO SCALE

RSP A77M1 DATED JULY 19, 2013 SUPPLEMENTS THE STANDARD PLANS BOOK DATED 2010.

**REVISED STANDARD PLAN RSP A77M1**

**2010 REVISED STANDARD PLAN RSP A77M1**

7-3-13

| Dist | COUNTY | ROUTE | POST MILES TOTAL PROJECT | SHEET No. | TOTAL SHEETS |
|---|---|---|---|---|---|
| 03 | But | 70 | 26.7/27.1 | 41 | 83 |

Randell D. Hiatt
REGISTERED CIVIL ENGINEER

November 15, 2013
PLANS APPROVAL DATE

REGISTERED PROFESSIONAL ENGINEER
Randell D. Hiatt
No. C50200
Exp. 6-30-15
CIVIL
STATE OF CALIFORNIA

*THE STATE OF CALIFORNIA OR ITS OFFICERS OR AGENTS SHALL NOT BE RESPONSIBLE FOR THE ACCURACY OR COMPLETENESS OF SCANNED COPIES OF THIS PLAN SHEET.*

TO ACCOMPANY PLANS DATED 4-28-14

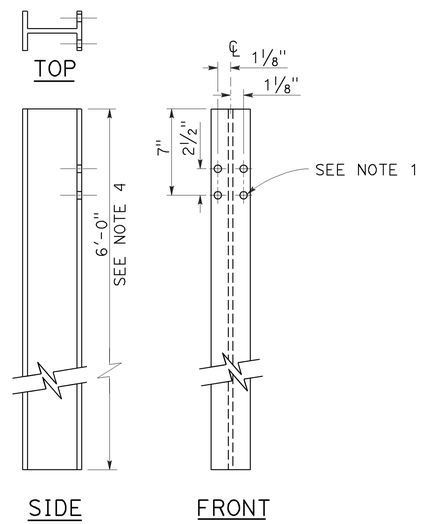


W6 x 9 OR W6 x 8.5
STEEL POST
See Note 4

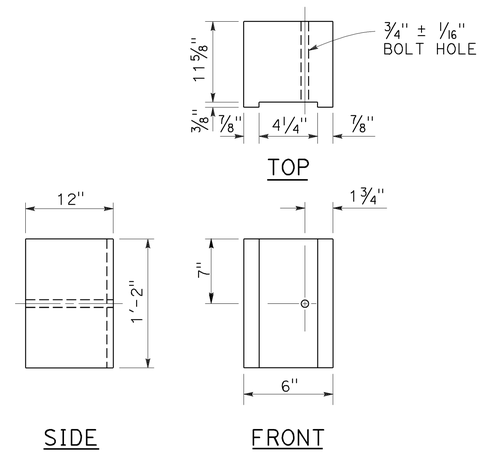


6" x 12"
NOTCHED WOOD BLOCK
See Notes 2 and 3

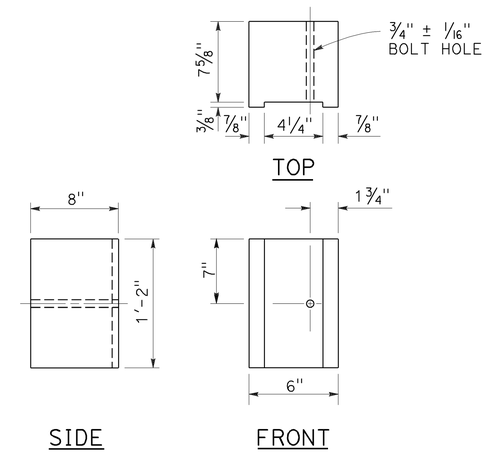


6" x 8"
NOTCHED WOOD BLOCK
Only for use with metal beam guard railing. See Note 5

## NOTES:

1. All holes in steel post shall be 13/16" Dia maximum.
2. Dimensions shown for wood block are nominal.
3. Notched face of block faces steel post.
4. 6'-0" length posts to be used for typical roadway installation. See Revised Standard Plan RSP A77N3.
5. See Revised Standard Plan RSP A77L3 for use of 6" x 8" and 8" x 8" notched wood blocks.
6. This post and 8" x 12" block combination to be used for line post sections of MGS on narrow roadways and where strengthened line post sections of MGS are warranted to shield fixed objects.

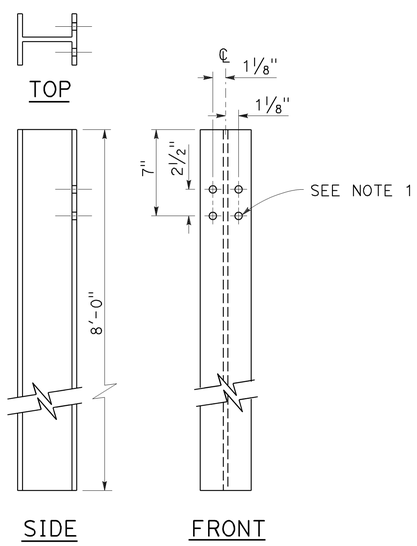


W6 x 15
STEEL POST
See Note 6

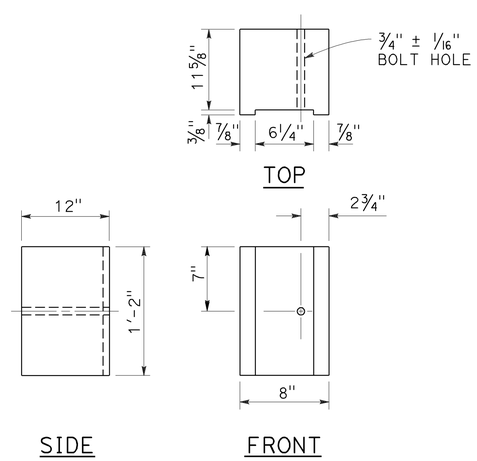


8" x 12"
NOTCHED WOOD BLOCK
See Notes 2 and 3

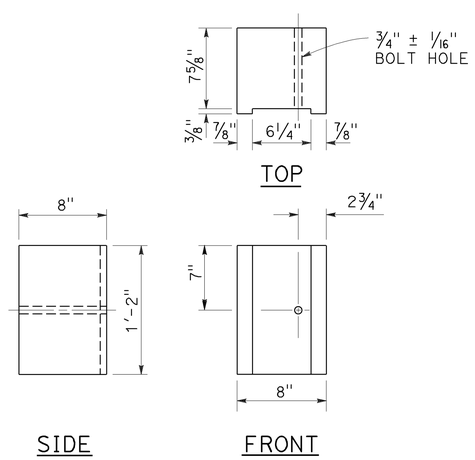


8" x 8"
NOTCHED WOOD BLOCK
Only for use with metal beam guard railing. See Note 5

STATE OF CALIFORNIA
DEPARTMENT OF TRANSPORTATION

# MIDWEST GUARDRAIL SYSTEM STEEL POST AND NOTCHED WOOD BLOCK DETAILS

NO SCALE

RSP A77N2 DATED NOVEMBER 15, 2013 SUPERSEDES RSP A77N2
DATED JULY 19, 2013 THAT SUPPLEMENTS THE STANDARD PLANS BOOK DATED 2010.

**REVISED STANDARD PLAN RSP A77N2**

**2010 REVISED STANDARD PLAN RSP A77N2**

10-29-13

| Dist | COUNTY | ROUTE | POST MILES TOTAL PROJECT | SHEET No. | TOTAL SHEETS |
|---|---|---|---|---|---|
| 03 | But | 70 | 26.7/27.1 | 42 | 83 |

Randell D. Hiatt
REGISTERED CIVIL ENGINEER

November 15, 2013
PLANS APPROVAL DATE

REGISTERED PROFESSIONAL ENGINEER
Randell D. Hiatt
No. C50200
Exp. 6-30-15
CIVIL
STATE OF CALIFORNIA

*THE STATE OF CALIFORNIA OR ITS OFFICERS OR AGENTS SHALL NOT BE RESPONSIBLE FOR THE ACCURACY OR COMPLETENESS OF SCANNED COPIES OF THIS PLAN SHEET.*

TO ACCOMPANY PLANS DATED 4-28-14

**2010 REVISED STANDARD PLAN RSP A77N3**

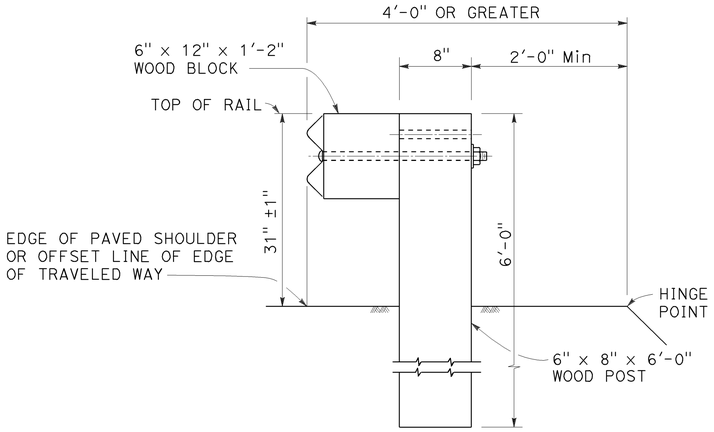


DETAIL A

TYPICAL ROADWAY INSTALLATION

See Note 1

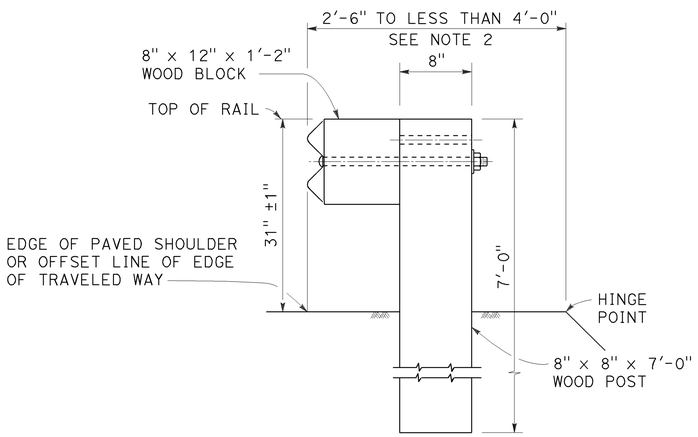


DETAIL B

NARROW ROADWAY INSTALLATION

See Note 1

## POST EMBEDMENT

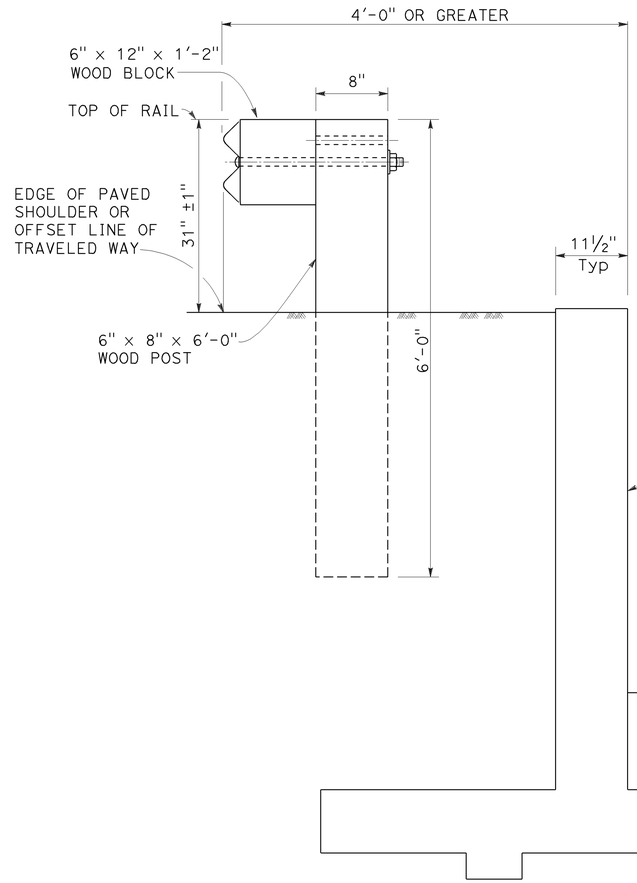


DETAIL C

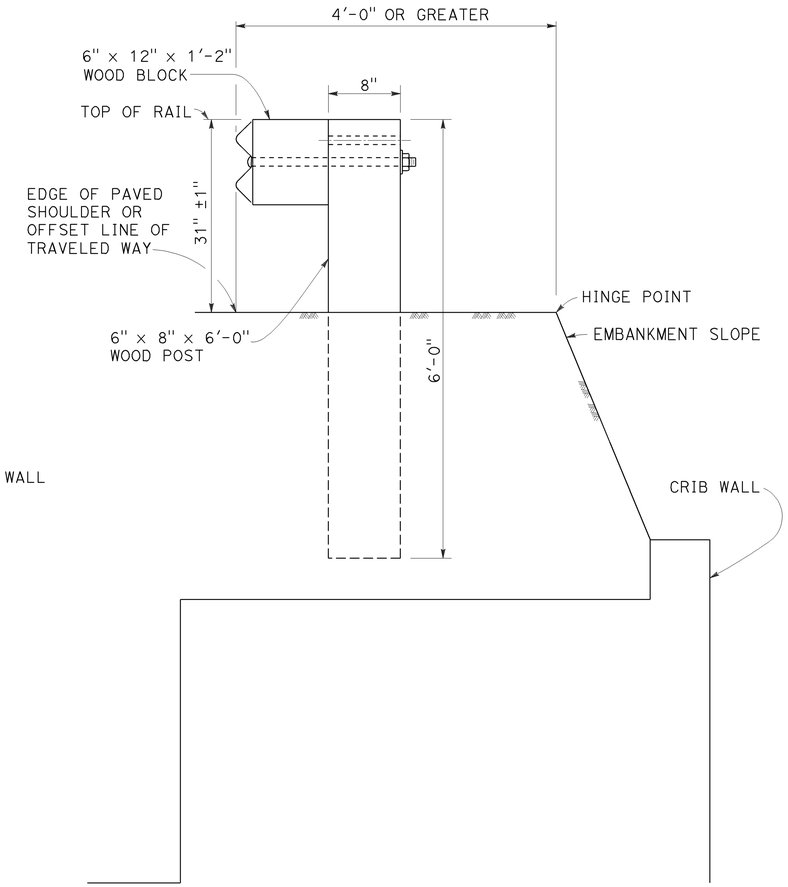


DETAIL D

## INSTALLATION AT EARTH RETAINING WALLS

NOTES:

1. These installation details also applicable to steel line post installations. For Detail A, C, and D, where steel line post installations are constructed, W6 x 8.5 or W6 x 9 steel post, 6'-0" in length, with 6" x 12" x 1'-2" notched wood blocks or notched recycled plastic blocks are to be used in place of the size of wood post and wood block shown. For Detail B, where steel line post installations are constructed, W6 x 15 steel post, 8'-0" in length, with 8" x 12" x 1'-2" notched wood blocks or notched recycled plastic blocks are to be used in place of the size of wood post and wood block shown. For additional installation details, see Revised Standard Plan RSP A77L1 and RSP A77L2.
2. Where the distance between the face of the rail and the hinge point is less than 2'-6", see the Project Plans for special details.
3. For dike positioning with MGS installations, see Revised Standard Plan RSP A77N4.

STATE OF CALIFORNIA
DEPARTMENT OF TRANSPORTATION

# MIDWEST GUARDRAIL SYSTEM TYPICAL LINE POST EMBEDMENT AND HINGE POINT OFFSET DETAILS

NO SCALE

RSP A77N3 DATED NOVEMBER 15, 2013 SUPERSEDES RSP A77N3
DATED JULY 19, 2013 THAT SUPPLEMENTS THE STANDARD PLANS BOOK DATED 2010.

**REVISED STANDARD PLAN RSP A77N3**

10-29-13

| Dist | COUNTY | ROUTE | POST MILES TOTAL PROJECT | SHEET No. | TOTAL SHEETS |
|---|---|---|---|---|---|
| 03 | But | 70 | 26.7/27.1 | 43 | 83 |

Randell D. Hiatt
REGISTERED CIVIL ENGINEER

July 19, 2013
PLANS APPROVAL DATE

REGISTERED PROFESSIONAL ENGINEER
Randell D. Hiatt
No. C50200
Exp. 6-30-15
CIVIL
STATE OF CALIFORNIA

THE STATE OF CALIFORNIA OR ITS OFFICERS OR AGENTS SHALL NOT BE RESPONSIBLE FOR THE ACCURACY OR COMPLETENESS OF SCANNED COPIES OF THIS PLAN SHEET.

TO ACCOMPANY PLANS DATED 4-28-14

## NOTES:

1. When necessary to place dike more than 7" in front of face of MGS, only Type C dike may be used. For dike details, see Revised Standard Plan RSP A87B.
2. For standard railing post embedment, see Revised Standard Plan RSP A77N3.
3. MGS delineation to be used where shown on the Project Plans.
4. When dike or curb is placed under MGS, the maximum height of the dike or curb shall be 6". Mountable dike should not be used. For dike and curb details, see Revised Standard Plans RSP A87A and RSP A87B.
5. For details of typical distance between the face of rail and hinge point, see Revised Standard Plan RSP A77N3.
6. For steel line posts, use 1/4 - 20 self-tapping screws in 0.22" diameter holes or 1/4" bolts in 9/32" diameter holes.

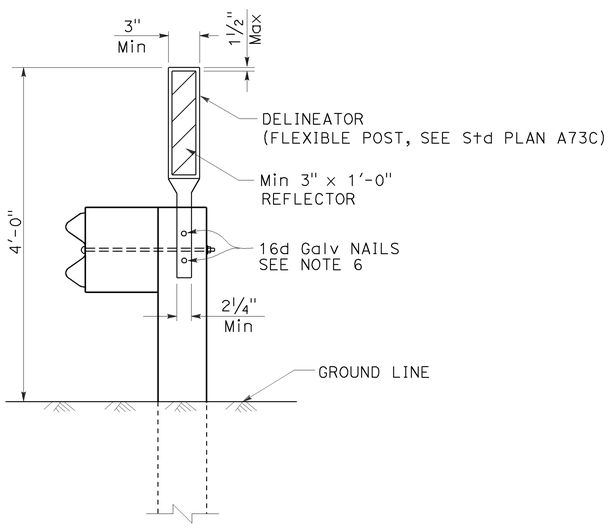


## MGS DELINEATION

See Note 3

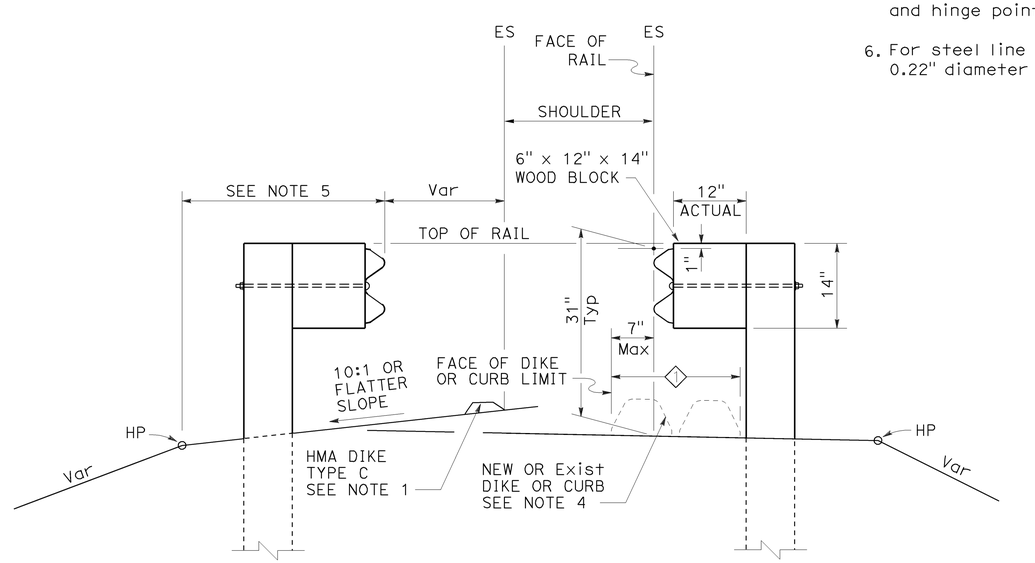


## DIKE POSITIONING

See Note 1

1 PERMISSIBLE DIKE OR CURB PLACEMENT AREA

STATE OF CALIFORNIA
DEPARTMENT OF TRANSPORTATION

# MIDWEST GUARDRAIL SYSTEM TYPICAL RAILING DELINEATION AND DIKE POSITIONING DETAILS

NO SCALE

RSP A77N4 DATED JULY 19, 2013 SUPPLEMENTS THE STANDARD PLANS BOOK DATED 2010.

**REVISED STANDARD PLAN RSP A77N4**

**2010 REVISED STANDARD PLAN RSP A77N4**

7-10-13

| Dist | COUNTY | ROUTE | POST MILES TOTAL PROJECT | SHEET No. | TOTAL SHEETS |
|---|---|---|---|---|---|
| 03 | But | 70 | 26.7/27.1 | 44 | 83 |

Randell D. Hiatt
REGISTERED CIVIL ENGINEER

July 19, 2013
PLANS APPROVAL DATE

REGISTERED PROFESSIONAL ENGINEER
Randell D. Hiatt
No. C50200
Exp. 6-30-15
CIVIL
STATE OF CALIFORNIA

*THE STATE OF CALIFORNIA OR ITS OFFICERS OR AGENTS SHALL NOT BE RESPONSIBLE FOR THE ACCURACY OR COMPLETENESS OF SCANNED COPIES OF THIS PLAN SHEET.*

TO ACCOMPANY PLANS DATED 4-28-14

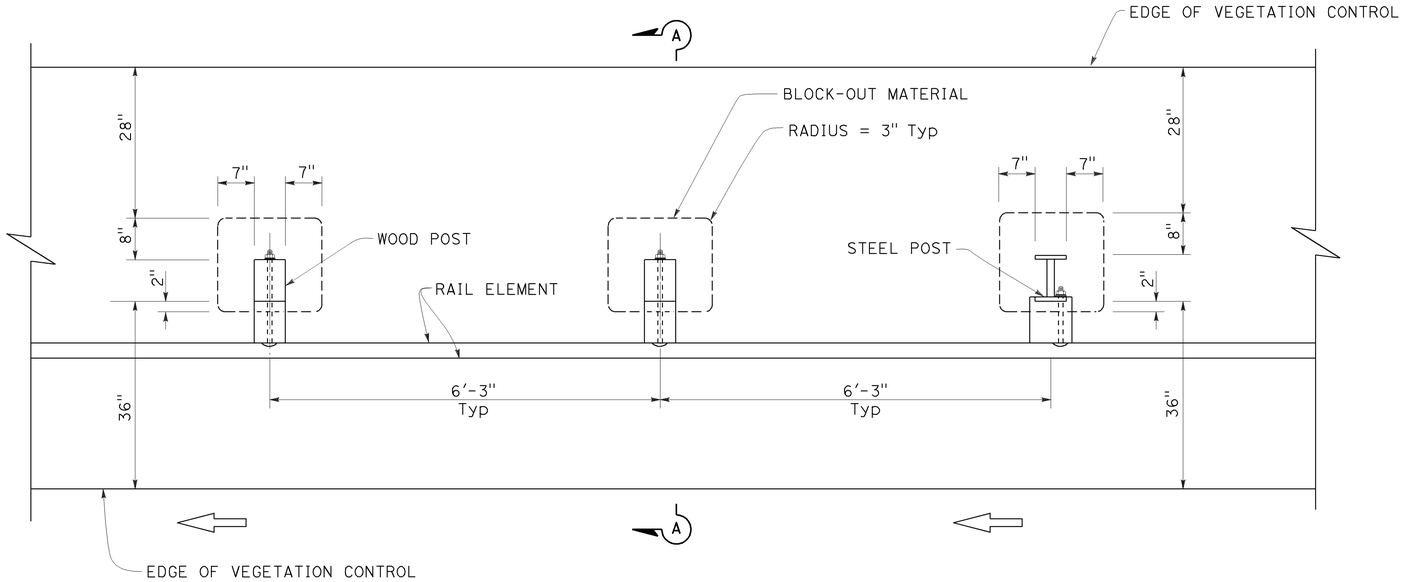


PLAN

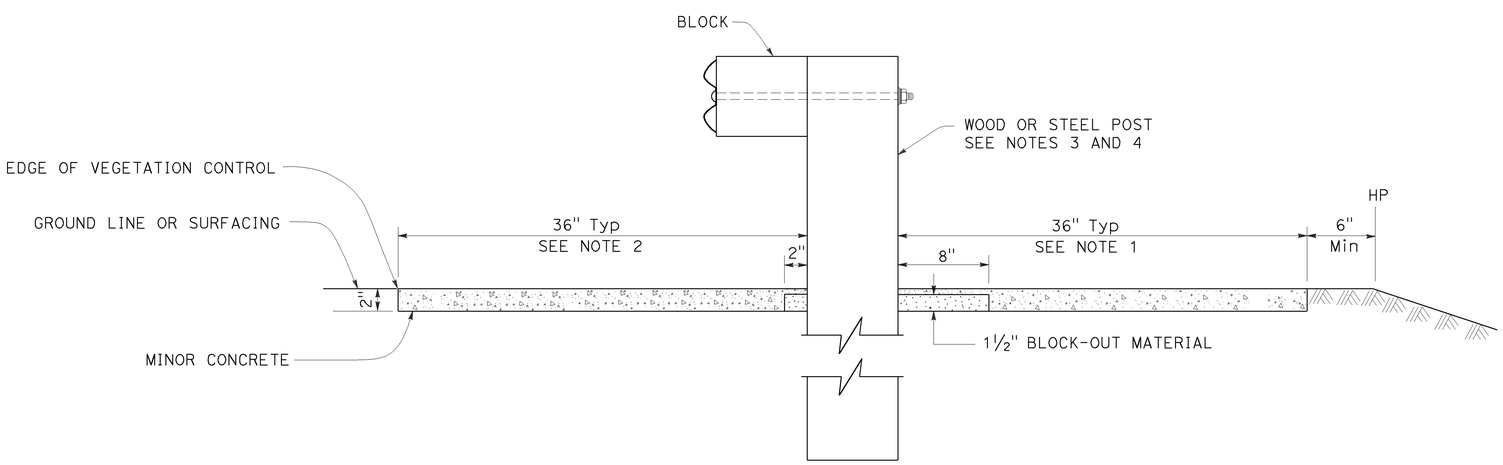


SECTION A-A

NOTES:

1. Where the distance between back of post and hinge point is less than 42", construct vegetation control to 6" from hinge point while maintaining the 8" block-out at back of post. If the 8" block-out at back of post can not be maintained, construct vegetation control flush with the back edge of post.
2. Where dike is constructed under railing, construct vegetation control to back edge of dike. Where paved shoulder is constructed within 36" in front of the post, construct vegetation control to the edge of paved shoulder.
3. For wood post sizes, see Revised Standard Plan RSP A77N1.
4. For steel post sizes, see Revised Standard Plan RSP A77N2.
5. For details not shown, see Revised Standard Plans RSP A77L1 and RSP A77L2.

STATE OF CALIFORNIA
DEPARTMENT OF TRANSPORTATION

# MIDWEST GUARDRAIL SYSTEM TYPICAL VEGETATION CONTROL STANDARD RAILING SECTION

NO SCALE

RSP A77N5 DATED JULY 19, 2013 SUPPLEMENTS THE STANDARD PLANS BOOK DATED 2010.

**REVISED STANDARD PLAN RSP A77N5**

**2010 REVISED STANDARD PLAN RSP A77N5**

7-3-13

| Dist | COUNTY | ROUTE | POST MILES TOTAL PROJECT | SHEET No. | TOTAL SHEETS |
|---|---|---|---|---|---|
| 03 | But | 70 | 26.7/27.1 | 45 | 83 |

Randell D. Hiatt
REGISTERED CIVIL ENGINEER

July 19, 2013
PLANS APPROVAL DATE

REGISTERED PROFESSIONAL ENGINEER
Randell D. Hiatt
No. C50200
Exp. 6-30-15
CIVIL
STATE OF CALIFORNIA

*THE STATE OF CALIFORNIA OR ITS OFFICERS OR AGENTS SHALL NOT BE RESPONSIBLE FOR THE ACCURACY OR COMPLETENESS OF SCANNED COPIES OF THIS PLAN SHEET.*

TO ACCOMPANY PLANS DATED 4-28-14

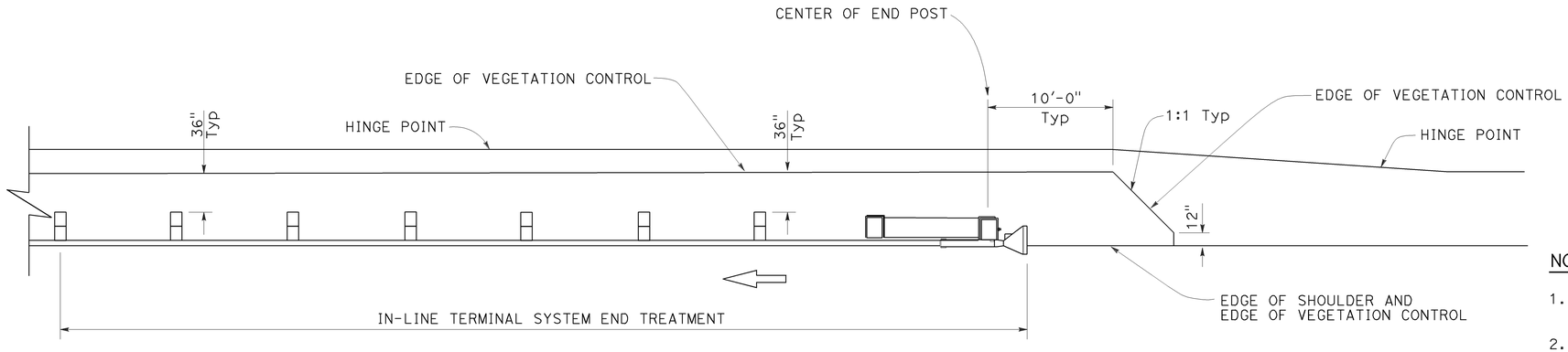


PLAN

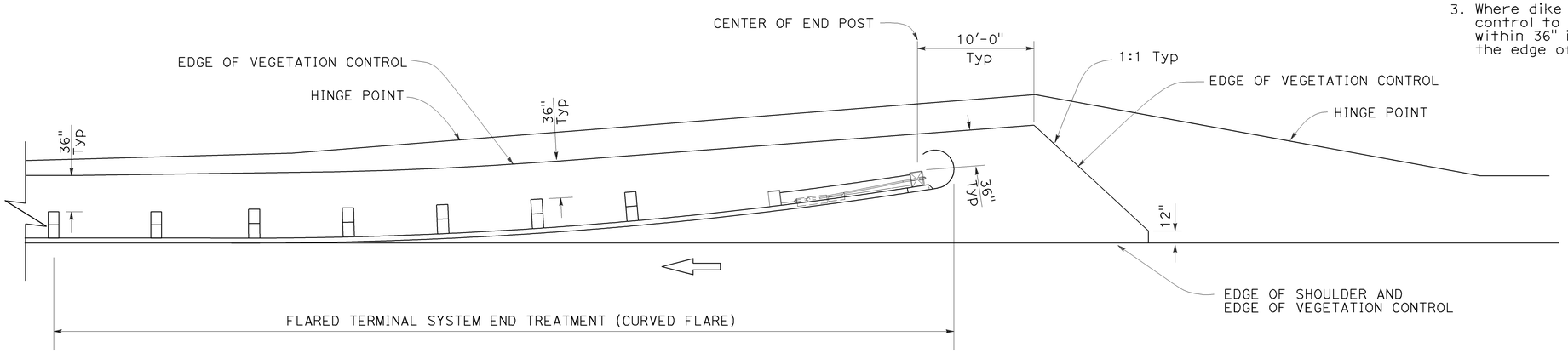


PLAN

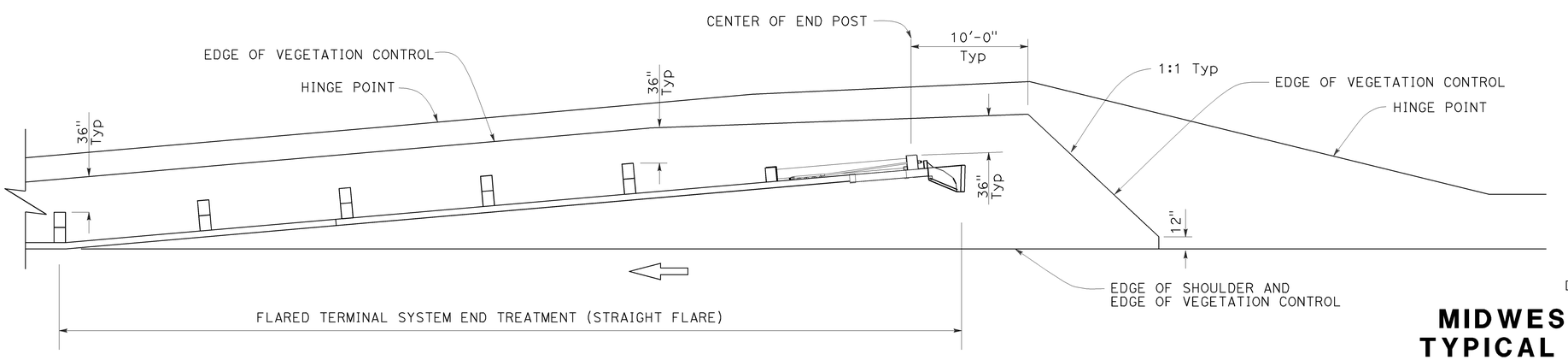


PLAN

## NOTES:

1. See Revised Standard Plan RSP A77N5 for additional vegetation control details.
2. Where the distance between back of post and hinge point is less than 42", construct vegetation control to 6" from hinge point while maintaining the 8" block-out at back of post. If the 8" block-out at back of post can not be maintained, construct vegetation control flush with the back edge of post.
3. Where dike is constructed under railing, construct vegetation control to back edge of dike. Where paved shoulder is constructed within 36" in front of the post, construct vegetation control to the edge of paved shoulder.

STATE OF CALIFORNIA
DEPARTMENT OF TRANSPORTATION

# MIDWEST GUARDRAIL SYSTEM TYPICAL VEGETATION CONTROL FOR TERMINAL SYSTEM END TREATMENTS

NO SCALE

RSP A77N6 DATED JULY 19, 2013 SUPPLEMENTS THE STANDARD PLANS BOOK DATED 2010.

**REVISED STANDARD PLAN RSP A77N6**

**2010 REVISED STANDARD PLAN RSP A77N6**

6-12-13

| Dist | COUNTY | ROUTE | POST MILES TOTAL PROJECT | SHEET No. | TOTAL SHEETS |
|---|---|---|---|---|---|
| 03 | But | 70 | 26.7/27.1 | 46 | 83 |

Randell D. Hiatt
REGISTERED CIVIL ENGINEER

July 19, 2013
PLANS APPROVAL DATE

REGISTERED PROFESSIONAL ENGINEER
Randell D. Hiatt
No. C50200
Exp. 6-30-15
CIVIL
STATE OF CALIFORNIA

*THE STATE OF CALIFORNIA OR ITS OFFICERS OR AGENTS SHALL NOT BE RESPONSIBLE FOR THE ACCURACY OR COMPLETENESS OF SCANNED COPIES OF THIS PLAN SHEET.*

TO ACCOMPANY PLANS DATED 4-28-14

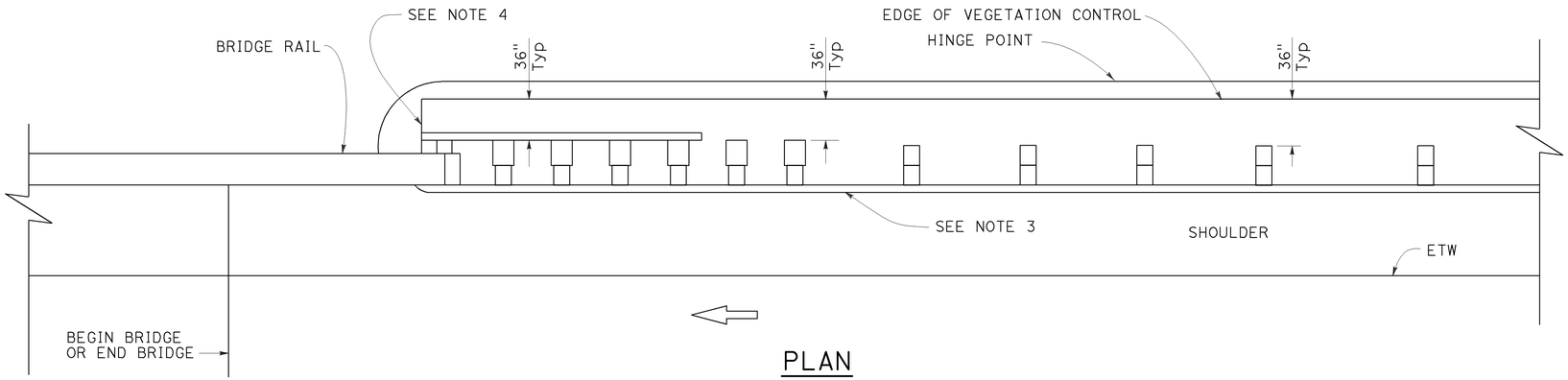


PLAN

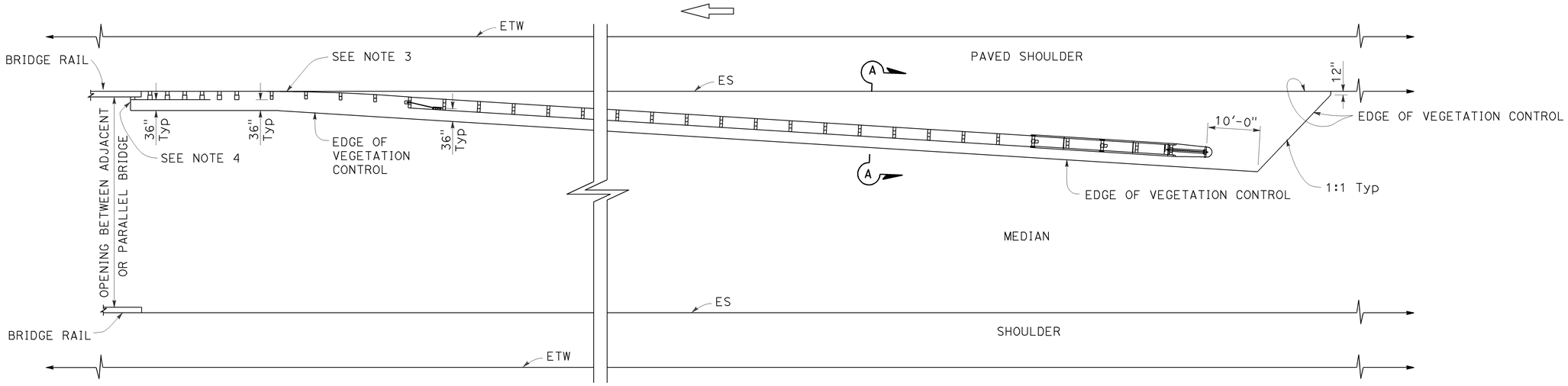


PLAN

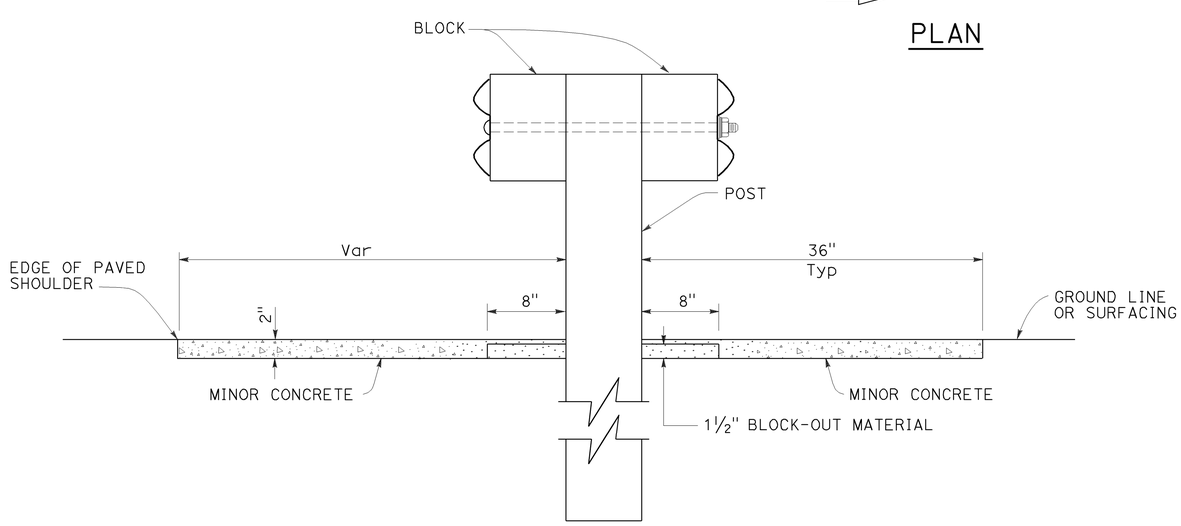


SECTION A-A

NOTES:

1. See Revised Standard Plan RSP A77N5 for additional vegetation control details.
2. Where the distance between back of post and hinge point is less than 42", construct vegetation control to 6" from hinge point while maintaining the 8" block-out at back of post. If the 8" block-out at back of post can not be maintained, construct vegetation control flush with the back edge of post.
3. Where dike is constructed under railing, construct vegetation control to back edge of dike. Where paved shoulder is constructed within 36" in front of the post, construct vegetation control to the edge of paved shoulder.
4. End vegetation control at end of backside rail element.

STATE OF CALIFORNIA
DEPARTMENT OF TRANSPORTATION

# MIDWEST GUARDRAIL SYSTEM TYPICAL VEGETATION CONTROL AT STRUCTURE APPROACH

NO SCALE

RSP A77N7 DATED JULY 19, 2013 SUPPLEMENTS THE STANDARD PLANS BOOK DATED 2010.

**REVISED STANDARD PLAN RSP A77N7**

**2010 REVISED STANDARD PLAN RSP A77N7**

6-12-13

| Dist | COUNTY | ROUTE | POST MILES TOTAL PROJECT | SHEET No. | TOTAL SHEETS |
|---|---|---|---|---|---|
| 03 | But | 70 | 26.7/27.1 | 47 | 83 |

Randell D. Hiatt
REGISTERED CIVIL ENGINEER

July 19, 2013
PLANS APPROVAL DATE

REGISTERED PROFESSIONAL ENGINEER
Randell D. Hiatt
No. C50200
Exp. 6-30-15
CIVIL
STATE OF CALIFORNIA

*THE STATE OF CALIFORNIA OR ITS OFFICERS OR AGENTS SHALL NOT BE RESPONSIBLE FOR THE ACCURACY OR COMPLETENESS OF SCANNED COPIES OF THIS PLAN SHEET.*

TO ACCOMPANY PLANS DATED 4-28-14

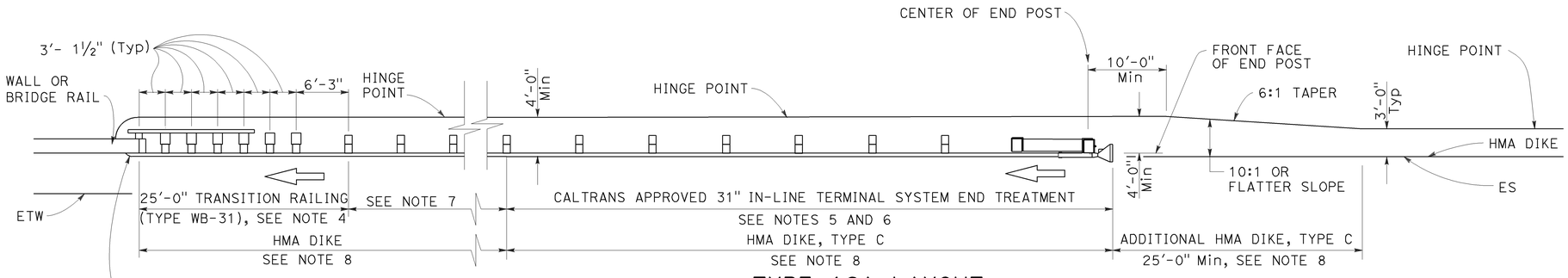


## TYPE 12A LAYOUT

(MGS installation at structure approach with
31" In-line end treatment at traffic approach end of railing)
See Notes 9

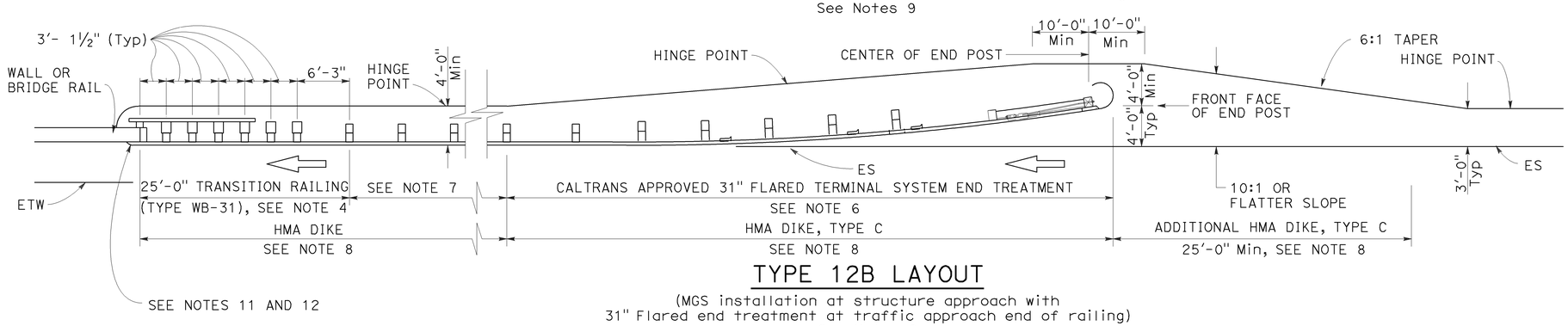


## TYPE 12B LAYOUT

(MGS installation at structure approach with
31" Flared end treatment at traffic approach end of railing)
See Notes 9

## NOTES:

1. Line post, blocks and hardware to be used are shown on Revised Standard Plans RSP A77L1, RSP A77L2, RSP A77M1, RSP A77N1 and RSP A77N2.
2. MGS post spacing to be 6'-3" center to center, except as otherwise noted.
3. Except as noted, line posts are 6" x 8" x 6'-0" wood with 6" x 12" x 1'-2" wood blocks. W6 x 8.5 or W6 x 9 steel posts, 6'-0" in length, with 6" x 12" x 1'-2" notched wood blocks or plastic blocks may be used for 6" x 8" x 6'-0" wood posts with 6" x 12" x 1'-2" wood blocks where applicable and when specified.
4. For Transition Railing (Type WB-31) details for Types 12A and 12B Layouts, see Revised Standard Plan RSP A77U4.
5. 31" in-line terminal system end treatments are used where site conditions will not accommodate a 31" flared end treatment.
6. The type 31" of terminal system end treatment to be used will be shown on the Project Plans.
7. Dependent on site conditions (embankment height, side slopes, or other fixed objects), it may be advisable to construct additional guard railing (a length equal to multiples of 12'-6" with 6'-3" post spacing) between the transition railing and end treatment. A 12.5 degree angle of departure can be drawn on the Project Plans from the edge of traveled way through the outer most point of the fixed object to determine the additional length of railing needed.
8. Where placement of dike is required with guard railing installations, see Revised Standard Plan RSP A77N4 for dike positioning details.
9. Type 12A or Type 12B Layouts are typically used:
   a. To the right of approaching traffic, at the end of a structure, on two-lane conventional highway where the roadbed width across the structure is less than 40 feet.
   b. To the left of approaching traffic, at the end of a structure, on two-lane conventional highway where the roadbed width across the structure is less than 40 feet.
   c. To the right of approaching traffic at the end of each structure on multilane freeways or expressways with separate adjacent or parallel bridges.
   d. To the right of approaching traffic at the end of the structure on multilane freeways or expressways with decked median on the bridge.
10. See Revised Standard Plan RSP A77Q3 for typical layout used left of approaching traffic at the ends of each structure on multilane freeways or expressways with separate adjacent or parallel bridges.
11. For additional details of typical connections to bridge rail, see Connection Detail AA on Revised Standard Plans RSP A77U1 and RSP A77U2 and Connection Detail FF on Revised Standard Plans RSP A77V1 and RSP A77V2.
12. For additional details of a typical connection to walls or abutments, see Revised Standard Plan RSP A77U3.

STATE OF CALIFORNIA
DEPARTMENT OF TRANSPORTATION

# MIDWEST GUARDRAIL SYSTEM TYPICAL LAYOUTS FOR STRUCTURE APPROACH

NO SCALE

RSP A77Q1 DATED JULY 19, 2013 SUPPLEMENTS THE STANDARD PLANS BOOK DATED 2010.

**REVISED STANDARD PLAN RSP A77Q1**

**2010 REVISED STANDARD PLAN RSP A77Q1**

6-19-13

| Dist | COUNTY | ROUTE | POST MILES TOTAL PROJECT | SHEET No. | TOTAL SHEETS |
|---|---|---|---|---|---|
| 03 | But | 70 | 26.7/27.1 | 48 | 83 |

Randell D. Hiatt
REGISTERED CIVIL ENGINEER

July 19, 2013
PLANS APPROVAL DATE

REGISTERED PROFESSIONAL ENGINEER
Randell D. Hiatt
No. C50200
Exp. 6-30-15
CIVIL
STATE OF CALIFORNIA

*THE STATE OF CALIFORNIA OR ITS OFFICERS OR AGENTS SHALL NOT BE RESPONSIBLE FOR THE ACCURACY OR COMPLETENESS OF SCANNED COPIES OF THIS PLAN SHEET.*

TO ACCOMPANY PLANS DATED 4-28-14

**2010 REVISED STANDARD PLAN RSP A77Q4**

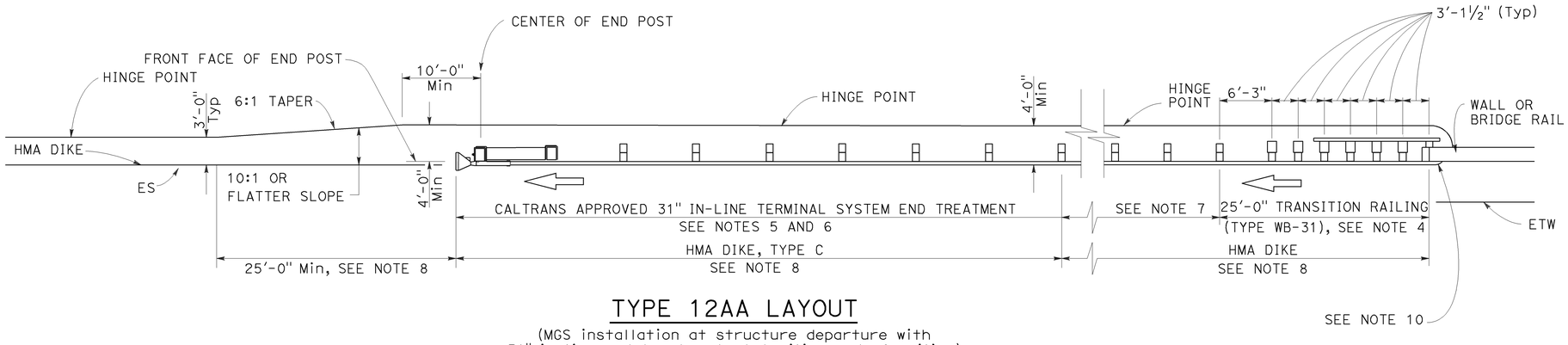


## TYPE 12AA LAYOUT

(MGS installation at structure departure with
31" in-line end treatment at trailing end of railing)
See Notes 8 and 9

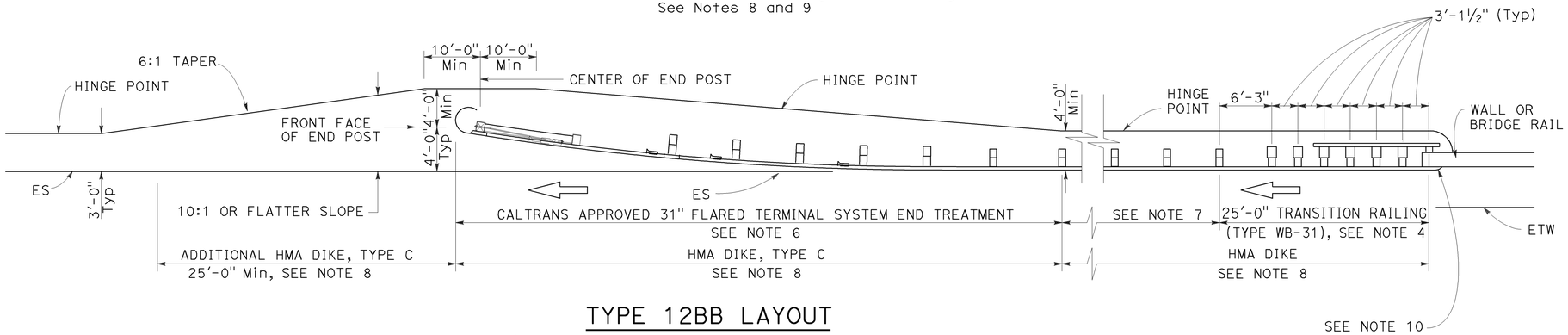


## TYPE 12BB LAYOUT

(MGS installation at structure departure with
31" flared end treatment at trailing end of railing)
See Notes 8 and 9

### NOTES:

1. Line post, blocks and hardware to be used are shown on Revised Standard Plans RSP A77L1, RSP A77L2, RSP A77M1, RSP A77N1 and RSP A77N2.
2. MGS post spacing to be 6'-3" center to center, except as otherwise noted.
3. Except as noted, line posts are 6" x 8" x 6'-0" wood with 6" x 12" x 1'-2" wood blocks. W6 x 8.5 or W6 x 9 steel posts, 6'-0" in length, with 6" x 12" x 1-2" notched wood blocks or notched recycled plastic blocks may be used for 6" x 8" x 6'-0" wood posts with 6" x 12" x 1'-2" wood blocks where applicable and when specified.
4. For Transition Railing (Type WB-31) details for Types 12AA and 12BB Layouts, see Revised Standard Plan RSP A77U4.
5. 31" in-line terminal system treatments are used where site conditions will not accommodate a 31" flared end treatment.
6. The type of 31" terminal system to be used will be shown on the Project Plans.
7. Dependent on site conditions (embankment height, side slopes, other fixed objects), it may be advisable to construct additional MGS (a length equal to multiples of 12'-6" with 6'-3" post spacing) between the transition railing and 31" end treatments.
8. Where placement of dike is required with MGS installations, see Revised Standard Plan RSP A77N4 for dike positioning details.
9. Type 12AA or Type 12BB Layouts are typically used to the right of traffic departing a structure on two-way conventional highways where the roadbed width across the structure is less than 40 feet.
10. For additional details of typical connections to bridge rail, see Connection Detail CC on Revised Standard Plan RSP A77U2 and Connection Detail HH on Revised Standard Plan RSP A77V2.

STATE OF CALIFORNIA
DEPARTMENT OF TRANSPORTATION

# MIDWEST GUARDRAIL SYSTEM TYPICAL LAYOUTS FOR STRUCTURE DEPARTURE

NO SCALE

RSP A77Q4 DATED JULY 19, 2013 SUPPLEMENTS THE STANDARD PLANS BOOK DATED 2010.

**REVISED STANDARD PLAN RSP A77Q4**

| Dist | COUNTY | ROUTE | POST MILES TOTAL PROJECT | SHEET No. | TOTAL SHEETS |
|---|---|---|---|---|---|
| 03 | But | 70 | 26.7/27.1 | 49 | 83 |

Randell D. Hiatt
REGISTERED CIVIL ENGINEER

July 19, 2013
PLANS APPROVAL DATE

REGISTERED PROFESSIONAL ENGINEER
Randell D. Hiatt
No. C50200
Exp. 6-30-15
CIVIL
STATE OF CALIFORNIA

*THE STATE OF CALIFORNIA OR ITS OFFICERS OR AGENTS SHALL NOT BE RESPONSIBLE FOR THE ACCURACY OR COMPLETENESS OF SCANNED COPIES OF THIS PLAN SHEET.*

TO ACCOMPANY PLANS DATED 4-28-14

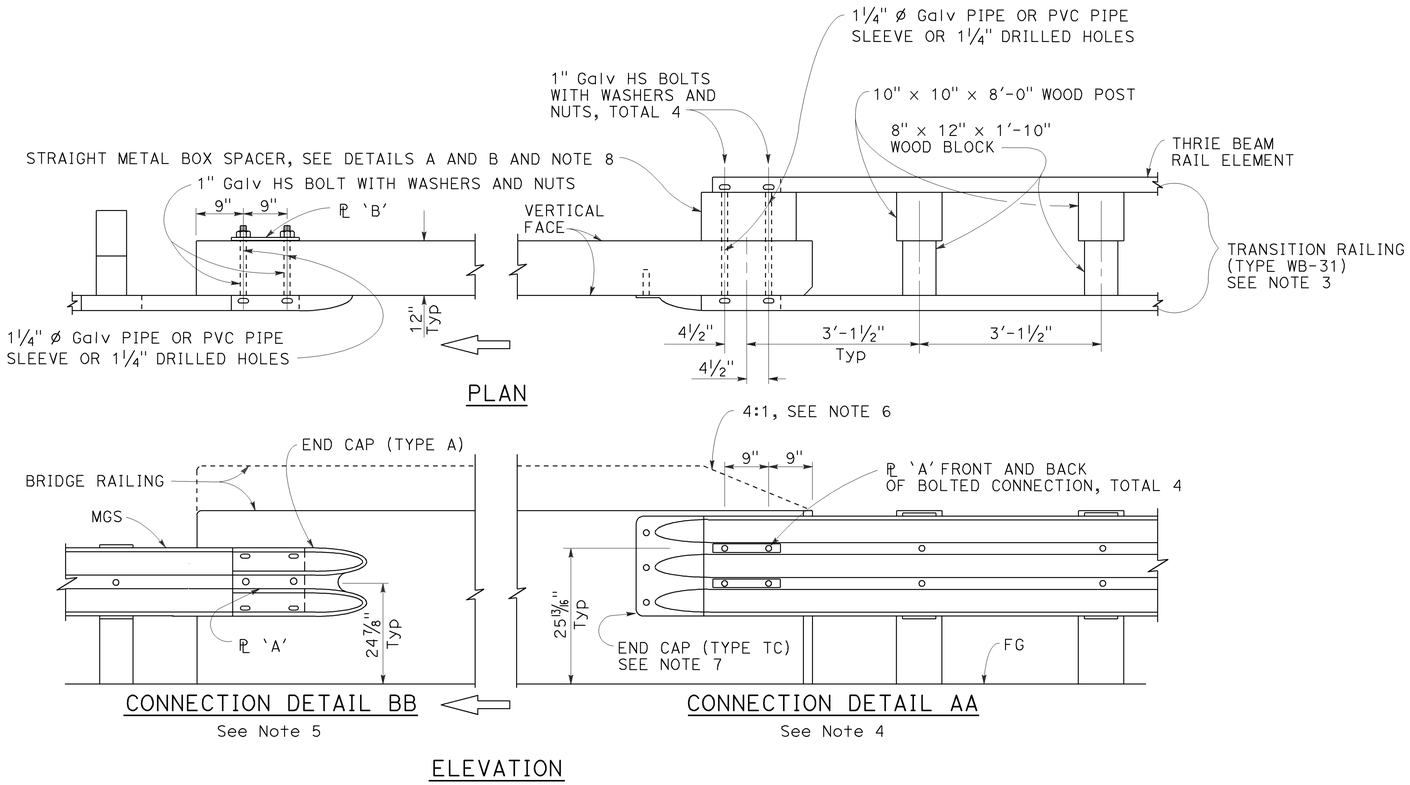


MIDWEST GUARDRAIL SYSTEM CONNECTION TO BRIDGE RAILING WITHOUT SIDEWALK

## NOTES:

1. See Revised Standard Plan RSP A77U2 for additional connection details to bridges without sidewalks.
2. Additional details of posts, blocks and hardware are shown on Revised Standard Plans RSP A77M1, RSP A77N1 and RSP A77N2.
3. For additional details of Transition Railing (Type WB-31), see Revised Standard Plan RSP A77U4. Transition Railing (Type WB-31) transitions the 12 gauge MGS railing section to a heavier gage nested thrie beam railing section which is connected to the concrete bridge railing.
4. For typical use of Connection Detail AA, see Layout Types 12A and 12B on Revised Standard Plan RSP A77Q1, Layout Types 12C and 12D on Revised Standard Plan RSP A77Q2, and Layout Type 12E on Revised Standard Plan RSP A77Q3.
5. For typical use of Connection Detail BB, see Layout Type 12D (structure departure railing connection) on Revised Standard Plan RSP A77Q2 and Layout Type 12DD on Revised Standard Plan RSP A77Q5.
6. Where the height of the bridge railing exceeds the height of the thrie beam railing by more than 1" at Connection Detail AA, taper the top of the end of the bridge railing at 4:1 to match the top elevation of the thrie beam rail.
7. For details of End Cap (Type TC), see Revised Standard Plan RSP A77U4.
8. See Revised Standard Plan RSP A77U4 for additional details regarding depth dimension for straight metal box spacer.

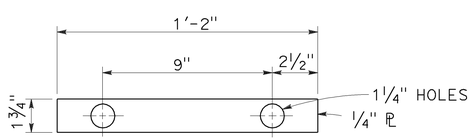


PLATE 'A'

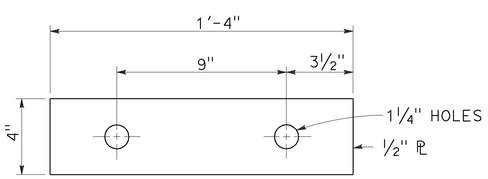


PLATE 'B'
(For backside of connection BB)

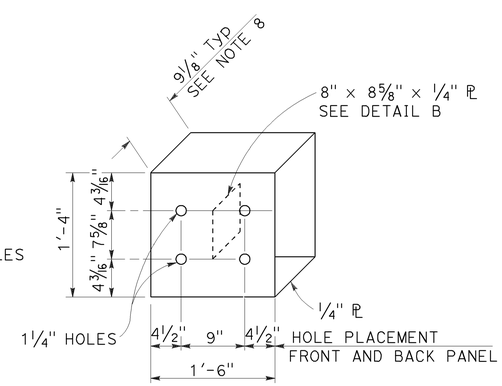


DETAIL A

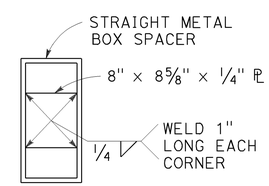


DETAIL B

STRAIGHT METAL BOX SPACER

STATE OF CALIFORNIA
DEPARTMENT OF TRANSPORTATION

# MIDWEST GUARDRAIL SYSTEM CONNECTIONS TO BRIDGE RAILINGS WITHOUT SIDEWALKS DETAILS No. 1

NO SCALE

RSP A77U1 DATED JULY 19, 2013 SUPPLEMENTS THE STANDARD PLANS BOOK DATED 2010.

**REVISED STANDARD PLAN RSP A77U1**

**2010 REVISED STANDARD PLAN RSP A77U1**

7-8-13

| Dist | COUNTY | ROUTE | POST MILES TOTAL PROJECT | SHEET No. | TOTAL SHEETS |
|---|---|---|---|---|---|
| 03 | But | 70 | 26.7/27.1 | 50 | 83 |

Randell D. Hiatt
REGISTERED CIVIL ENGINEER

July 19, 2013
PLANS APPROVAL DATE

REGISTERED PROFESSIONAL ENGINEER
Randell D. Hiatt
No. C50200
Exp. 6-30-15
CIVIL
STATE OF CALIFORNIA

*THE STATE OF CALIFORNIA OR ITS OFFICERS OR AGENTS SHALL NOT BE RESPONSIBLE FOR THE ACCURACY OR COMPLETENESS OF SCANNED COPIES OF THIS PLAN SHEET.*

TO ACCOMPANY PLANS DATED 4-28-14

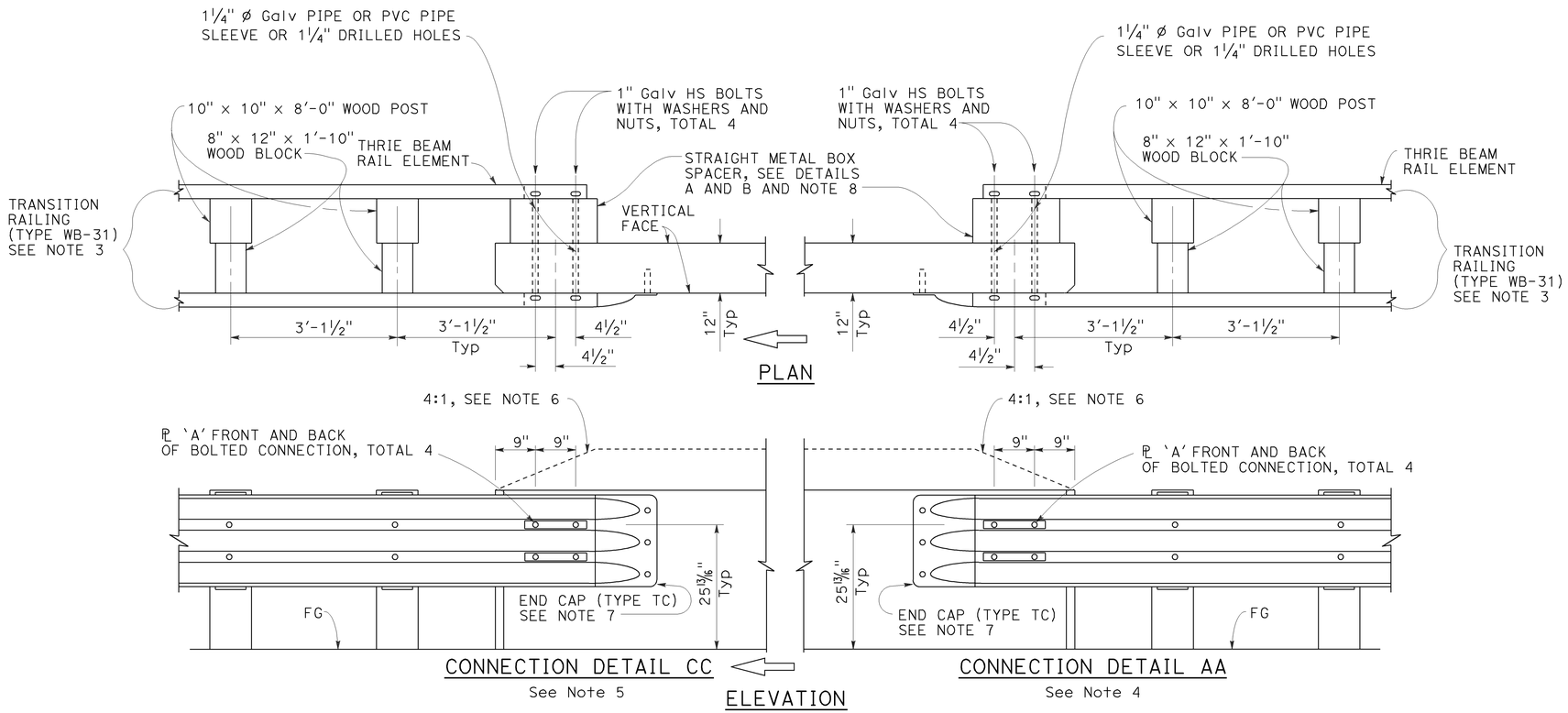


MIDWEST GUARDRAIL SYSTEM CONNECTION TO BRIDGE RAILING WITHOUT SIDEWALK

## NOTES:

1. See Revised Standard Plan RSP A77U1 for additional connection details to bridges without sidewalks.
2. Additional details of posts, blocks and hardware are shown on Revised Standard Plans RSP A77M1, RSP A77N1 and RSP A77N2.
3. For additional details of Transition Railing (Type WB-31), see Revised Standard Plan RSP A77U4. Transition Railing (Type WB-31) transitions the 12 gauge MGS railing section to a heavier gage nested thrie beam railing section which is connected to the concrete bridge railing.
4. For typical use of Connection Detail AA, see Layout Types 12A and 12B on Revised Standard Plan RSP A77Q1, Layout Types 12C and 12D on Revised Standard Plan RSP A77Q2, and Layout Type 12E on Revised Standard Plan RSP A77Q3.
5. For typical use of Connection Detail CC, see Layout Types 12AA and 12BB on Revised Standard Plan RSP A77Q4 and Layout Type 12CC on Revised Standard Plan RSP A77Q5.
6. Where the height of the bridge railing exceeds the height of the thrie beam railing by more than 1" at Connection Detail AA and connection Detail CC, taper the top of the end of the bridge railing at 4:1 to match the top elevation of the thrie beam railing.
7. For details of End Cap (Type TC), see Revised Standard Plan RSP A77U4.
8. See Revised Standard Plan RSP A77U4 for additional details regarding depth dimension for straight metal box spacer.

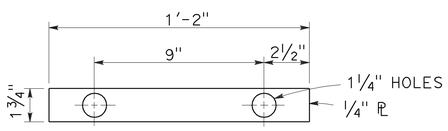


PLATE 'A'

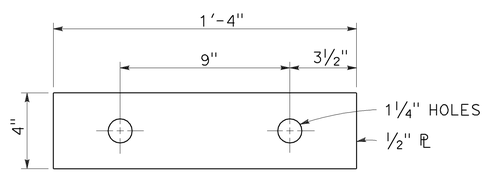


PLATE 'B'
(For backside of connection BB)

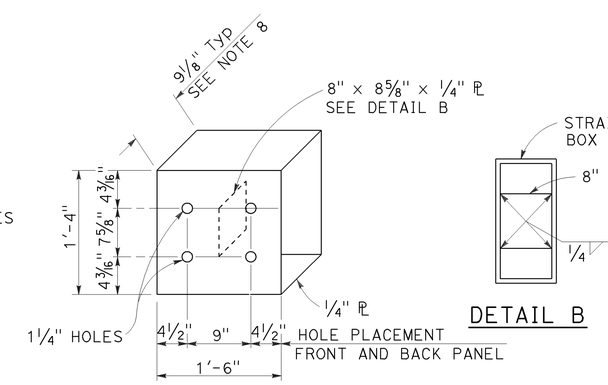


STATE OF CALIFORNIA
DEPARTMENT OF TRANSPORTATION

# MIDWEST GUARDRAIL SYSTEM CONNECTIONS TO BRIDGE RAILINGS WITHOUT SIDEWALKS DETAILS No. 2

NO SCALE

RSP A77U2 DATED JULY 19, 2013 SUPPLEMENTS THE STANDARD PLANS BOOK DATED 2010.

**REVISED STANDARD PLAN RSP A77U2**

**2010 REVISED STANDARD PLAN RSP A77U2**

6-20-13

| Dist | COUNTY | ROUTE | POST MILES TOTAL PROJECT | SHEET No. | TOTAL SHEETS |
|---|---|---|---|---|---|
| 03 | But | 70 | 26.7/27.1 | 51 | 83 |

Randell D. Hiatt
REGISTERED CIVIL ENGINEER

November 15, 2013
PLANS APPROVAL DATE

REGISTERED PROFESSIONAL ENGINEER
Randell D. Hiatt
No. C50200
Exp. 6-30-15
CIVIL
STATE OF CALIFORNIA

*THE STATE OF CALIFORNIA OR ITS OFFICERS OR AGENTS SHALL NOT BE RESPONSIBLE FOR THE ACCURACY OR COMPLETENESS OF SCANNED COPIES OF THIS PLAN SHEET.*

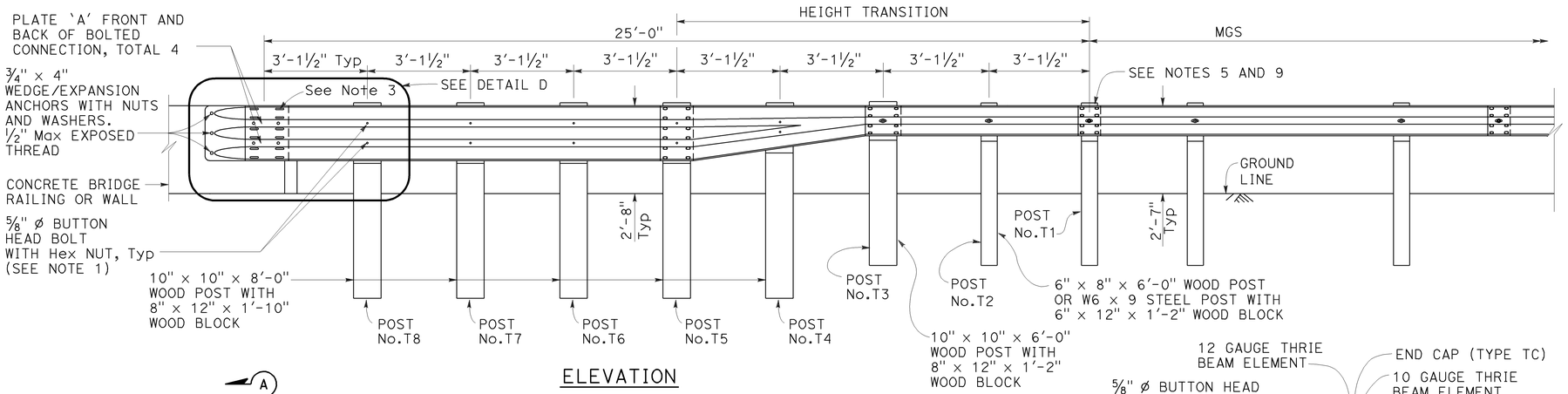


ELEVATION

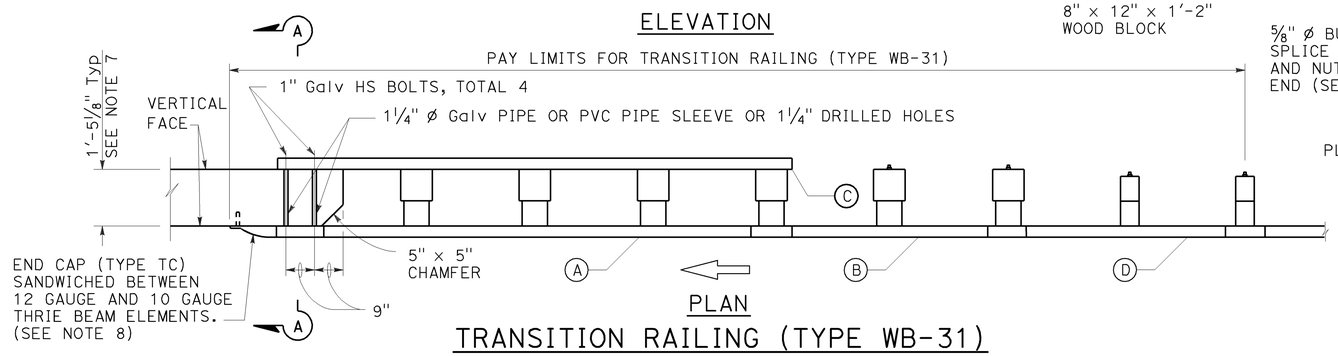


PLAN

## TRANSITION RAILING (TYPE WB-31)

(No Blockout Attachment)

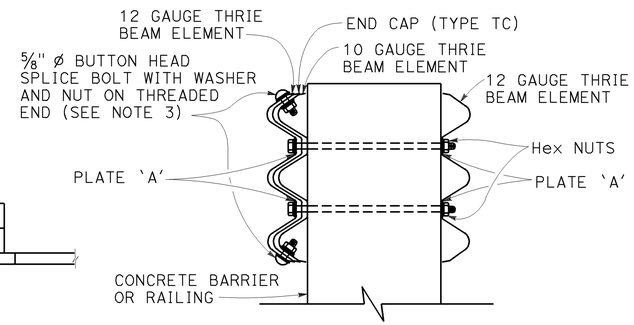


SECTION A-A

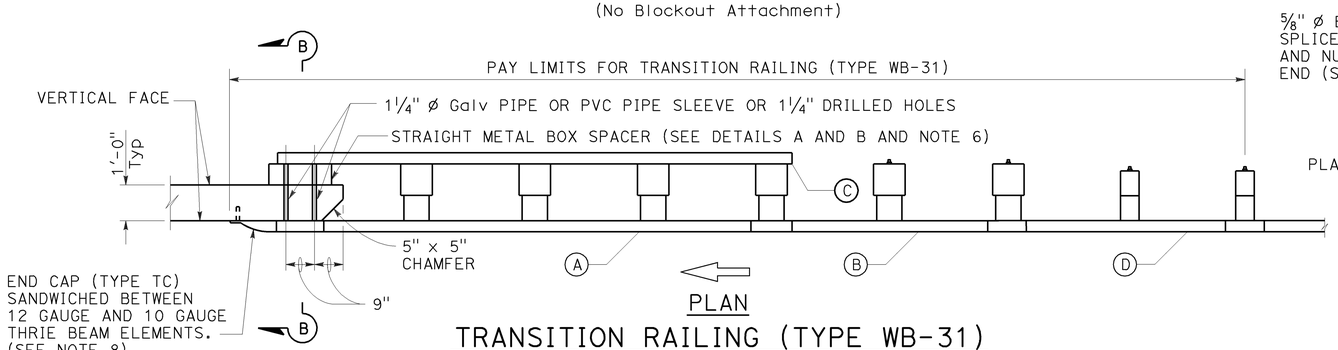


PLAN

## TRANSITION RAILING (TYPE WB-31)

(Blockout Attachment)

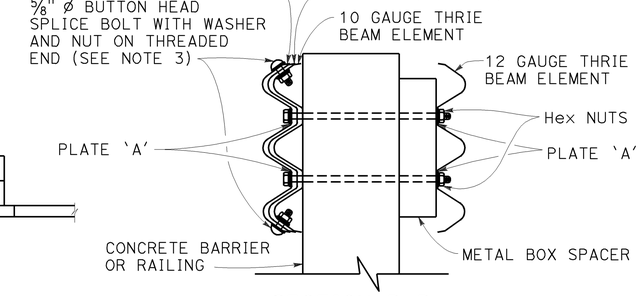


SECTION B-B

## NOTES:

TO ACCOMPANY PLANS DATED 4-28-14

1. Use 5/8" ø Button head bolts and hex nuts for connections to posts. No washer on rail face for bolted connections to post.
2. The nested rail elements, end cap, and 'W' beam to thrie beam element may be spliced together prior to bolting the elements to the wood post and concrete barrier or railing.
3. Exterior splice bolt holes for rail element splices at Post No. T5 and the connection to the concrete barrier or railing shall be the standard 29/32" x 1 1/8" slot size. Interior splice bolt holes at these locations may be increased up to 1 1/4" ø. Only the top 4 and the bottom 4 splice bolts with washers and nuts are required for rail splices at Post No. T5 and the connection to the concrete barrier or railing.
4. The top elevation of Posts No. T2 through No. T7 shall not project more than 1" above the top elevation of the rail element.
5. Typically, the railing connected to Transition Railing (Type WB-31) will be either standard railing section of MGS with height transition ratio of 150:1 or a Caltrans approved 31" end treatment attached to Post No. T1.
6. The depth of the metal box spacer varies from the 9 1/8" to 1 1/2" and is dependent on the width of the concrete railing or wall. The combined dimension for the depth of the metal box spacer plus the width of railing or wall is typically 21 1/8". Where the space between the backside of the concrete railing or wall and the rear thrie beam element is less than 1 1/2", metal plates similar to Plate 'A' are to be used as spacers.
7. Where the width of the concrete railing or wall is greater than 17 1/8", wood blocks are to be used to fill the space created between the backside of Posts No. T5 through No. T8 and the rear thrie beam element. These wood blocks shall be 8" in width and 1'-2" in length. The dimension between the front thrie beam element and the rear thrie beam element is to match the width of the concrete railing or wall.
8. End cap may be installed over 12 gauge and 10 gauge thrie beam elements where transition railing is installed on the departure end of bridge railing.
9. Conform standard railing section height to 31" at Post No. T1 using height transition ratio of 150:1.

## LEGEND:

(A) NESTED THRIE BEAM ELEMENTS (ONE 12 GAUGE ELEMENT NESTED OVER ONE 10 GAUGE ELEMENT).

(B) ONE ASYMMETRICAL 10 GAUGE "W" BEAM TO THRIE BEAM ELEMENT.

(C) ONE 12 GAUGE THRIE BEAM ELEMENT.

(D) ONE 10 GAUGE "W" BEAM RAIL ELEMENT (7'-3 1/2" LENGTH)

10 GAUGE = 0.138" THICK
12 GAUGE = 0.108" THICK

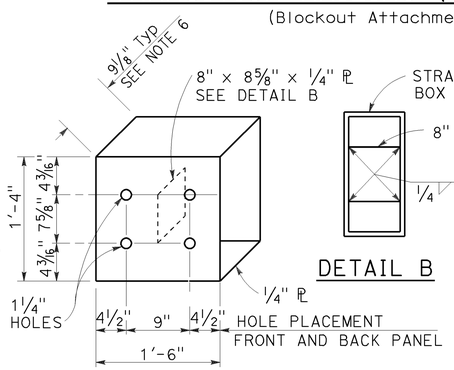


DETAIL A

STRAIGHT METAL BOX SPACER

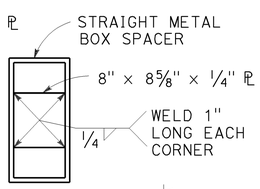


DETAIL B

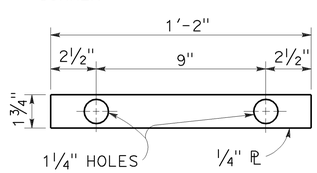


DETAIL C

PLATE 'A'

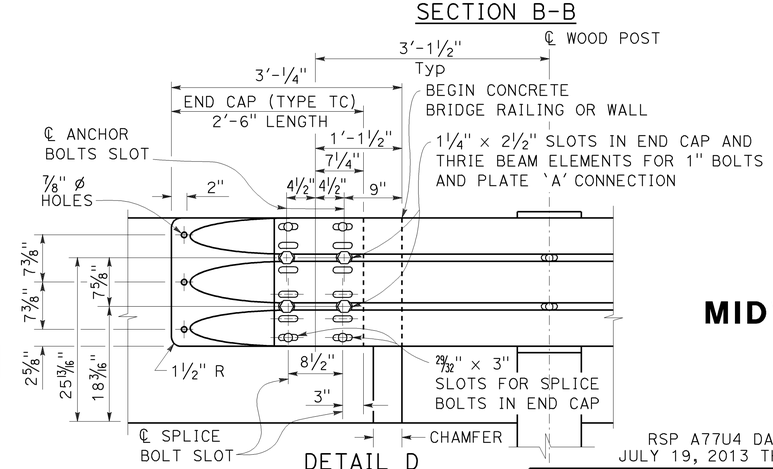


DETAIL D

STATE OF CALIFORNIA
DEPARTMENT OF TRANSPORTATION

# MIDWEST GUARDRAIL SYSTEM TRANSITION RAILING (TYPE WB-31)

NO SCALE

RSP A77U4 DATED NOVEMBER 15, 2013 SUPERSEDES RSP A77U4 DATED JULY 19, 2013 THAT SUPPLEMENTS THE STANDARD PLANS BOOK DATED 2010.

**REVISED STANDARD PLAN RSP A77U4**

**2010 REVISED STANDARD PLAN RSP A77U4**

10-4-13

| Dist | COUNTY | ROUTE | POST MILES TOTAL PROJECT | SHEET No. | TOTAL SHEETS |
|---|---|---|---|---|---|
| 03 | But | 70 | 26.7/27.1 | 52 | 83 |

REGISTERED CIVIL ENGINEER

July 19, 2013
PLANS APPROVAL DATE

REGISTERED PROFESSIONAL ENGINEER
Michael Janzen
No. 44788
Exp. 03-31-14
CIVIL
STATE OF CALIFORNIA

*THE STATE OF CALIFORNIA OR ITS OFFICERS OR AGENTS SHALL NOT BE RESPONSIBLE FOR THE ACCURACY OR COMPLETENESS OF SCANNED COPIES OF THIS PLAN SHEET.*

TO ACCOMPANY PLANS DATED 4-28-14

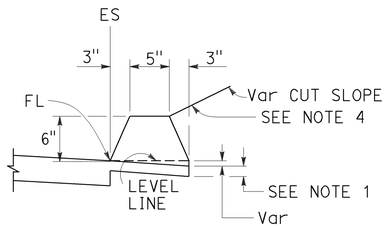


TYPE A
See Note 3

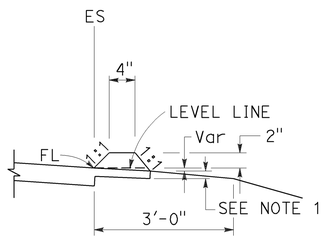


TYPE C

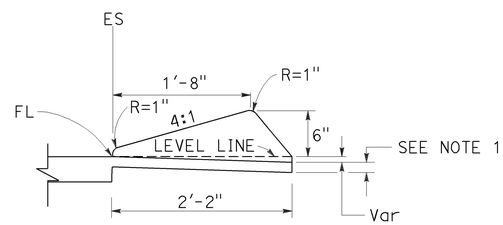


TYPE D

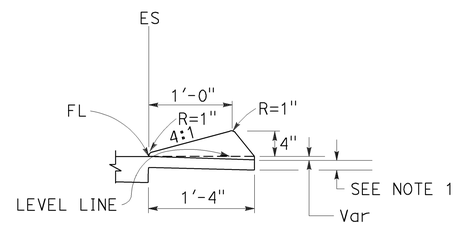


TYPE E

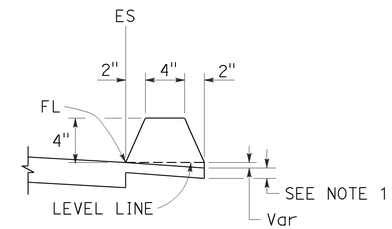


TYPE F
See Note 5

## DIKES

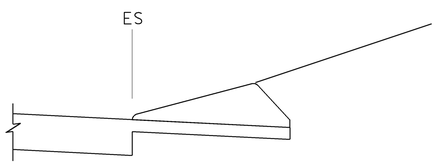


CASE C-1
Cut Slope

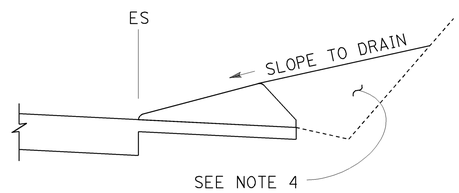


CASE C-2
Cut Slope

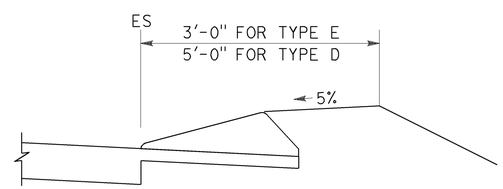


CASE F

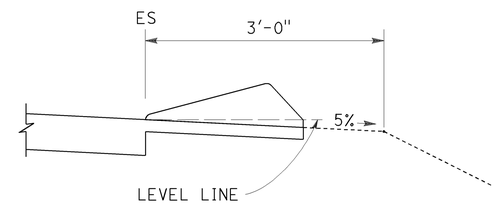


CASE R
See Note 2

## TYPE D AND E BACKFILL DETAILS

### NOTES:

1. For HMA shoulders only, extend top layer of HMA placed on the shoulder under dike with no joint at the ES. For projects with OGFC shoulders, do not extend OGFC under dike. See project plans for modified dike detail.
2. Case R applies to retrofit only projects where restrictive conditions do not provide enough width for Case F backfill.
3. Type A dike only to be used where restrictive slope conditions do not provide enough width to use Type D or Type E dike.
4. Fill and compact with excavated material to top of dike.
5. Use Type F dike, where dike is required with guard railing installations. See Revised Standard Plan RSP A77N4 for dike positioning details.

### DIKE QUANTITIES

| TYPE | CUBIC YARDS PER LINEAR FOOT |
|---|---|
| A | 0.0135 |
| C | 0.0038 |
| D | 0.0293 |
| E | 0.0130 |
| F | 0.0066 |

Quantities based on 5% cross slope.

STATE OF CALIFORNIA
DEPARTMENT OF TRANSPORTATION

# HOT MIX ASPHALT DIKES

NO SCALE

RSP A87B DATED JULY 19, 2013 SUPERSEDES STANDARD PLAN A87B
DATED MAY 20, 2011 - PAGE 120 OF THE STANDARD PLANS BOOK DATED 2010.

**REVISED STANDARD PLAN RSP A87B**

**2010 REVISED STANDARD PLAN RSP A87B**

6-27-13

| Dist | COUNTY | ROUTE | POST MILES TOTAL PROJECT | SHEET No. | TOTAL SHEETS |
|---|---|---|---|---|---|
| 03 | But | 70 | 26.7/27.1 | 53 | 83 |

Gregory A. Balzer
LICENSED LANDSCAPE ARCHITECT

July 19, 2013
PLANS APPROVAL DATE

LICENSED LANDSCAPE ARCHITECT
Gregory A. Balzer 2576
07-19-13
Renewal Date
2-28-15
Date
STATE OF CALIFORNIA

*THE STATE OF CALIFORNIA OR ITS OFFICERS OR AGENTS SHALL NOT BE RESPONSIBLE FOR THE ACCURACY OR COMPLETENESS OF SCANNED COPIES OF THIS PLAN SHEET.*

TO ACCOMPANY PLANS DATED 4-28-14

## A

| | |
|---|---|
| AB | AGGREGATE BASE |
| ABS | ACRYLONITRILE-BUTADIENE-STYRENE |
| AC | ASPHALT CONCRETE |
| ACC | ARMOR-CLAD CONDUCTORS |
| Adj | ADJACENT/ADJUSTABLE |
| AIC | AUXILIARY IRRIGATION CONTROLLER |
| Alt | ALTERNATIVE |
| AMEND | AMENDMENT |
| ARV | AIR RELEASE VALVE |
| AUTO | AUTOMATIC |
| AUX | AUXILIARY |
| AVB | ATMOSPHERIC VACUUM BREAKER |

## B

| | |
|---|---|
| B&B | BALLED AND BURLAPPED |
| B/B | BRASS/BRONZE |
| B/B/PL | BRASS/BRONZE/PLASTIC |
| B/PL | BRASS/PLASTIC |
| BFM | BONDED FIBER MATRIX |
| Bit Ctd | BITUMINOUS COATED |
| BP | BOOSTER PUMP |
| BPA | BACKFLOW PREVENTER ASSEMBLY |
| BPE | BACKFLOW PREVENTER ENCLOSURE |
| BV | BALL VALVE |

## C

| | |
|---|---|
| C | CONDUIT |
| CAP | CORRUGATED ALUMINUM PIPE |
| CARV | COMBINATION AIR RELEASE VALVE |
| CB | COUPLING BAND |
| CCA | CAM COUPLER ASSEMBLY |
| CEC | CONTROLLER ENCLOSURE CABINET |
| CHDPE | CORRUGATED HIGH DENSITY POLYETHYLENE |
| CL | CHAIN LINK |
| CNC | CONTROL AND NEUTRAL CONDUCTORS |
| Conc | CONCRETE |
| CP | COPPER PIPE |
| CS | COMPOST SOCK |
| CSP | CORRUGATED STEEL PIPE |
| CST | CENTER STRIP |
| CV | CHECK VALVE |

## D

| | |
|---|---|
| Dia | DIAMETER |
| DIP | DUCTILE IRON PIPE |
| DIT | DRIP IRRIGATION TUBING |
| DG | DECOMPOSED GRANITE |
| DN | DIAMETER NOMINAL |
| DVA | DRIP VALVE ASSEMBLY |

## E

| | |
|---|---|
| EC | EROSION CONTROL |
| ECTC | EROSION CONTROL TECHNOLOGY COUNCIL |
| Elect | ELECTRIC/ELECTRICAL |
| Elev | ELEVATION |
| ELL | ELBOW |
| ENCL | ENCLOSURE |
| EP | EDGE OF PAVEMENT |
| ES | EDGE OF SHOULDER |
| EST | END STRIP |
| ESTB | ESTABLISHMENT |
| ETW | EDGE OF TRAVELED WAY |

## F

| | |
|---|---|
| F | FULL CIRCLE |
| F/P | FULL/PART CIRCLE |
| FCV | FLOW CONTROL VALVE |
| FERT | FERTILIZER |
| FG | FINISHED GRADE |
| FH | FLEXIBLE HOSE |
| FIPT | FEMALE IRON PIPE THREAD |
| FIS | FERTILIZER INJECTOR SYSTEM |
| FL | FLOW LINE |
| FR | FIBER ROLL |
| FS | FLOW SENSOR |
| FSC | FLOW SENSOR CABLE |
| FV | FLUSH VALVE |

## G

| | |
|---|---|
| Galv | GALVANIZED |
| GARV | GARDEN VALVE |
| GARVA | GARDEN VALVE ASSEMBLY |
| GM | GRAVEL MULCH |
| GPH | GALLONS PER HOUR |
| GPM | GALLONS PER MINUTE |
| GSP | GALVANIZED STEEL PIPE |
| GV | GATE VALVE |

## H

| | |
|---|---|
| H | HALF CIRCLE |
| HDPE | HIGH DENSITY POLYETHYLENE |
| HP | HORSEPOWER/HINGE POINT |
| HPL | HIGH PRESSURE LINE |
| Hwy | HIGHWAY |

## I

| | |
|---|---|
| IC | IRRIGATION CONTROLLER |
| ICC | IRRIGATION CONTROLLER(S) IN CONTROLLER ENCLOSURE CABINET |
| ID | INSIDE DIAMETER |
| IFS | IRRIGATION FILTRATION SYSTEM |
| IPS | IRON PIPE SIZE |
| IPT | IRON PIPE THREAD |
| Irr | IRRIGATION |

## L

| | |
|---|---|
| L | LENGTH |

## M

| | |
|---|---|
| Max | MAXIMUM |
| MBGR | METAL BEAM GUARD RAILING |
| MCV | MANUAL CONTROL VALVE |
| MIC | MASTER IRRIGATION CONTROLLER |
| Min | MINIMUM |
| MIPT | MALE IRON PIPE THREAD |
| Misc | MISCELLANEOUS |
| Mtl | MATERIAL |
| MVP | MAINTENANCE VEHICLE PULLOUT |

## N

| | |
|---|---|
| NCN | NO COMMON NAME |
| NL | NOZZLE LINE |
| No. | NUMBER |
| NPT | NATIONAL PIPE THREAD |

## O

| | |
|---|---|
| O/C | ON CENTER |
| OD | OUTSIDE DIAMETER |
| OL | OVERLAP |

## P

| | |
|---|---|
| P | PART CIRCLE |
| PB | PULL BOX |
| PCC | PORTLAND CEMENT CONCRETE |
| PE | POLYETHYLENE |
| Pkt | PACKET |
| PL | PLASTIC |
| PLS | PURE LIVE SEED |
| PLT | PLANT/PLANTING |
| PLT ESTB | PLANT ESTABLISHMENT |
| PM | POST MILE |
| PR | PRESSURE RATED |
| PRLV | PRESSURE RELIEF VALVE |
| PRV | PRESSURE REGULATING VALVE |
| PVC | POLYVINYL CHLORIDE |
| Pvmt | PAVEMENT |

## Q

| | |
|---|---|
| Q | QUARTER CIRCLE |
| QCV | QUICK COUPLING VALVE |

## R

| | |
|---|---|
| R | RADIUS |
| RCP | REINFORCED CONCRETE PIPE |
| RCV | REMOTE CONTROL VALVE |
| RCVM | REMOTE CONTROL VALVE (MASTER) |
| RCVMF | REMOTE CONTROL VALVE (MASTER) W/FLOW SENSOR |
| RCVP | REMOTE CONTROL VALVE W/PRESSURE REGULATOR |
| RCW | RECYCLED WATER |
| RECP | ROLLED EROSION CONTROL PRODUCT |
| REQ | REQUIRED |
| RICS | REMOTE IRRIGATION CONTROL SYSTEM |
| R/W | RIGHT OF WAY |

## S

| | |
|---|---|
| S | SLIP |
| SCH | SCHEDULE |
| SF | STATE-FURNISHED |
| Shld | SHOULDER |
| Sq | SQUARE |
| SST | SIDE STRIP |
| Sta | STATION |
| Std | STANDARD |
| SW | SIDEWALK/SOUND WALL |

## T

| | |
|---|---|
| T | THIRD CIRCLE/THREAD |
| TLS | TRUCK LOADING STANDPIPE |
| TQ | THREE QUARTER CIRCLE |
| TRM | TURF REINFORCEMENT MAT |
| TT | TWO-THIRDS CIRCLE |
| TWSA | TREE WELL SPRINKLER ASSEMBLY |
| Typ | TYPICAL |

## U

| | |
|---|---|
| UG | UNDERGROUND |

## W

| | |
|---|---|
| W | WIDTH |
| W/ | WITH |
| WM | WATER METER |
| WS | WYE STRAINER |
| WSA | WYE STRAINER ASSEMBLY |
| WSP | WELDED STEEL PIPE |
| WWM | WELDED WIRE MESH |

**NOTE:**

For additional abbreviations, see Standard Plans A10A and A10B.

STATE OF CALIFORNIA
DEPARTMENT OF TRANSPORTATION

# LANDSCAPE AND EROSION CONTROL ABBREVIATIONS

NO SCALE

RSP H1 DATED JULY 19, 2013 SUPERSEDES STANDARD PLAN H1 DATED MAY 20, 2011 - PAGE 218 OF THE STANDARD PLANS BOOK DATED 2010.

**REVISED STANDARD PLAN RSP H1**

**2010 REVISED STANDARD PLAN RSP H1**

6-28-13

| Dist | COUNTY | ROUTE | POST MILES TOTAL PROJECT | SHEET No. | TOTAL SHEETS |
|---|---|---|---|---|---|
| 03 | But | 70 | 26.7/27.1 | 54 | 83 |

REGISTERED CIVIL ENGINEER

July 19, 2013
PLANS APPROVAL DATE

REGISTERED PROFESSIONAL ENGINEER
Gurinderpal Bhullar
No. C48815
Exp. 9-30-14
CIVIL
STATE OF CALIFORNIA

*THE STATE OF CALIFORNIA OR ITS OFFICERS OR AGENTS SHALL NOT BE RESPONSIBLE FOR THE ACCURACY OR COMPLETENESS OF SCANNED COPIES OF THIS PLAN SHEET.*

TO ACCOMPANY PLANS DATED 4-28-14

## TABLE 1

### TAPER LENGTH CRITERIA AND CHANNELIZING DEVICE SPACING

| SPEED (S) | MINIMUM TAPER LENGTH * FOR WIDTH OF OFFSET 12 FEET (W) | | | | MAXIMUM CHANNELIZING DEVICE SPACING | | |
|---|---|---|---|---|---|---|---|
| | | | | | X | Y | Z ** |
| | TANGENT 2L | MERGING L | SHIFTING L/2 | SHOULDER L/3 | TAPER | TANGENT | CONFLICT |
| mph | ft | ft | ft | ft | ft | ft | ft |
| 20 | 160 | 80 | 40 | 27 | 20 | 40 | 10 |
| 25 | 250 | 125 | 63 | 42 | 25 | 50 | 12 |
| 30 | 360 | 180 | 90 | 60 | 30 | 60 | 15 |
| 35 | 490 | 245 | 123 | 82 | 35 | 70 | 17 |
| 40 | 640 | 320 | 160 | 107 | 40 | 80 | 20 |
| 45 | 1080 | 540 | 270 | 180 | 45 | 90 | 22 |
| 50 | 1200 | 600 | 300 | 200 | 50 | 100 | 25 |
| 55 | 1320 | 660 | 330 | 220 | 55 | 110 | 27 |
| 60 | 1440 | 720 | 360 | 240 | 60 | 120 | 30 |
| 65 | 1560 | 780 | 390 | 260 | 65 | 130 | 32 |
| 70 | 1680 | 840 | 420 | 280 | 70 | 140 | 35 |

* - For other offsets, use the following merging taper length formula for L:
For speed of 40 mph or less, $L = WS^2/60$
For speed of 45 mph or more, $L = WS$

Where: L = Taper length in feet
W = Width of offset in feet
S = Posted speed limit, off-peak 85th-percentile speed prior to work starting, or the anticipated operating speed in mph

** - Use for taper and tangent sections where there are no pavement markings or where there is a conflict between existing pavement markings and channelizers (CA).

## TABLE 2

### LONGITUDINAL BUFFER SPACE AND FLAGGER STATION SPACING

| SPEED * | Min D ** | DOWNGRADE Min D *** | | |
|---|---|---|---|---|
| | | -3% | -6% | -9% |
| mph | ft | ft | ft | ft |
| 20 | 115 | 116 | 120 | 126 |
| 25 | 155 | 158 | 165 | 173 |
| 30 | 200 | 205 | 215 | 227 |
| 35 | 250 | 257 | 271 | 287 |
| 40 | 305 | 315 | 333 | 354 |
| 45 | 360 | 378 | 400 | 427 |
| 50 | 425 | 446 | 474 | 507 |
| 55 | 495 | 520 | 553 | 593 |
| 60 | 570 | 598 | 638 | 686 |
| 65 | 645 | 682 | 728 | 785 |
| 70 | 730 | 771 | 825 | 891 |

* - Speed is posted speed limit, off-peak 85th-percentile speed prior to work starting, or the anticipated operating speed in mph

** - Longitudinal buffer space or flagger station spacing

*** - Use on sustained downgrade steeper than -3 percent and longer than 1 mile.

## TABLE 3

### ADVANCE WARNING SIGN SPACING

| ROAD TYPE | DISTANCE BETWEEN SIGNS * | | |
|---|---|---|---|
| | A | B | C |
| | ft | ft | ft |
| URBAN - 25 mph OR LESS | 100 | 100 | 100 |
| URBAN - MORE THAN 25 mph TO 40 mph | 250 | 250 | 250 |
| URBAN - MORE THAN 40 mph | 350 | 350 | 350 |
| RURAL | 500 | 500 | 500 |
| EXPRESSWAY / FREEWAY | 1000 | 1500 | 2640 |

* - The distances are approximate, are intended for guidance purposes only, and should be applied with engineering judgment. These distances should be adjusted by the Engineer for field conditions, if necessary, by increasing or decreasing the recommmended distances.

STATE OF CALIFORNIA
DEPARTMENT OF TRANSPORTATION

# TRAFFIC CONTROL SYSTEM TABLES FOR LANE AND RAMP CLOSURES

NO SCALE

RSP T9 DATED JULY 19, 2013 SUPERSEDES RSP T9 DATED APRIL 19, 2013 THAT SUPPLEMENTS THE STANDARD PLANS BOOK DATED 2010.

**REVISED STANDARD PLAN RSP T9**

**2010 REVISED STANDARD PLAN RSP T9**

4-30-13

| Dist | COUNTY | ROUTE | POST MILES TOTAL PROJECT | SHEET No. | TOTAL SHEETS |
|---|---|---|---|---|---|
| 03 | But | 70 | 26.7/27.1 | 55 | 83 |

REGISTERED CIVIL ENGINEER

April 19, 2013
PLANS APPROVAL DATE

REGISTERED PROFESSIONAL ENGINEER
Gurinderpal Bhullar
No. C48815
Exp. 9-30-14
CIVIL
STATE OF CALIFORNIA

THE STATE OF CALIFORNIA OR ITS OFFICERS OR AGENTS SHALL NOT BE RESPONSIBLE FOR THE ACCURACY OR COMPLETENESS OF SCANNED COPIES OF THIS PLAN SHEET.

TO ACCOMPANY PLANS DATED 4-28-14

## NOTES:

See Revised Standard Plan RSP T9 for tables.

Use cone spacing X for taper segment, Y for tangent segment or Z for conflict situations, as approriate, per Table 1, unless X, Y, or Z cone spacing is shown on this sheet.

Unless otherwise specified in the special provisions, all temporary warning signs shall have black legend on fluorescent orange background.

California codes are designated by (CA). Otherwise, Federal (MUTCD) codes are shown.

# TYPICAL LANE CLOSURE WITH REVERSIBLE CONTROL

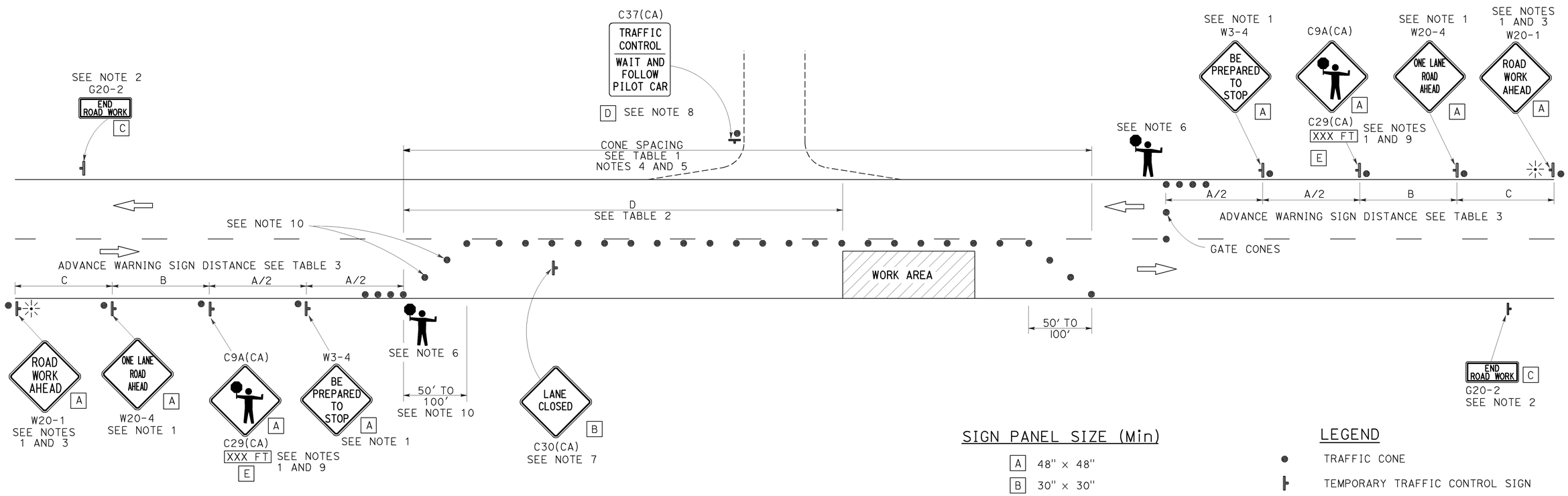


## SIGN PANEL SIZE (Min)

| | |
|---|---|
| A | 48" × 48" |
| B | 30" × 30" |
| C | 36" × 18" |
| D | 36" × 42" |
| E | 20" × 7" |

## LEGEND

- TRAFFIC CONE
- TEMPORARY TRAFFIC CONTROL SIGN
- PORTABLE FLASHING BEACON
- FLAGGER

## NOTES:

1. Each advance warning sign in each direction of travel shall be equipped with at least two flags for daytime closure. Each flag shall be at least 16" x 16" in size and shall be orange or fluorescent red-orange in color. Flashing beacons shall be placed at the locations indicated for lane closure during hours of darkness.
2. A G20-2 "END ROAD WORK" sign, as appropriate, shall be placed at the end of the lane control unless the end of work area is obvious, or ends within a larger project's limits.
3. If the W20-1 sign would follow within 2000' of a stationary W20-1 or G20-1 "ROAD WORK NEXT _____ MILES", use a W20-4 sign for the first advance warning sign.
4. All cones used for lane closures during the hours of darkness shall be fitted with retroreflective bands (or sleeves) as specified in the specifications.
5. Portable delineators, placed at one-half the spacing indicated for traffic cones, may be used instead of cones for daytime closures only.
6. Additional advance flaggers may be required. Flagger should stand in a conspicuous place, be visible to approaching traffic as well as approaching vehicles after the first vehicle has stopped. During the hours of darkness, the flagging-station and flagger shall be illuminated and clearly visible to approaching traffic. The illumination footprint of the lighting on the ground shall be at least 20' in diameter. Place a minimum of four cones at 50' intervals in advance of flagger station as shown.
7. Place C30(CA) "LANE CLOSED" sign at 500' to 1000' intervals throughout extended work areas. They are optional if the work area is visible from the flagger station.
8. When a pilot car is used, place a C37(CA) "TRAFFIC CONTROL-WAIT AND FOLLOW PILOT CAR" sign with black legend on white background at all intersections, driveways and alleys without a flagger within traffic control area. Signs shall be clean and visible at all times. Where traffic can not be effectively self-regulated, at least one flagger shall be used at each intersection within traffic control area.
9. An optional C29(CA) sign may be placed below the C9A(CA) sign.
10. Either traffic cones or barricades shall be placed on the taper. Barricades shall be Type I, II, or III.

STATE OF CALIFORNIA
DEPARTMENT OF TRANSPORTATION

# TRAFFIC CONTROL SYSTEM FOR LANE CLOSURE ON TWO LANE CONVENTIONAL HIGHWAYS

NO SCALE

RSP T13 DATED APRIL 19, 2013 SUPERSEDES STANDARD PLAN T13 DATED MAY 20, 2011 - PAGE 241 OF THE STANDARD PLANS BOOK DATED 2010.

**REVISED STANDARD PLAN RSP T13**

**2010 REVISED STANDARD PLAN RSP T13**

4-2-13

| Dist | COUNTY | ROUTE | POST MILES TOTAL PROJECT | SHEET No. | TOTAL SHEETS |
|---|---|---|---|---|---|
| 03 | But | 70 | 26.7/27.1 | 56 | 83 |

REGISTERED CIVIL ENGINEER

November 15, 2013
PLANS APPROVAL DATE

REGISTERED PROFESSIONAL ENGINEER Tillat Satter No. C42892 Exp. 3-31-14 CIVIL STATE OF CALIFORNIA

*THE STATE OF CALIFORNIA OR ITS OFFICERS OR AGENTS SHALL NOT BE RESPONSIBLE FOR THE ACCURACY OR COMPLETENESS OF SCANNED COPIES OF THIS PLAN SHEET.*

TO ACCOMPANY PLANS DATED 4-28-14

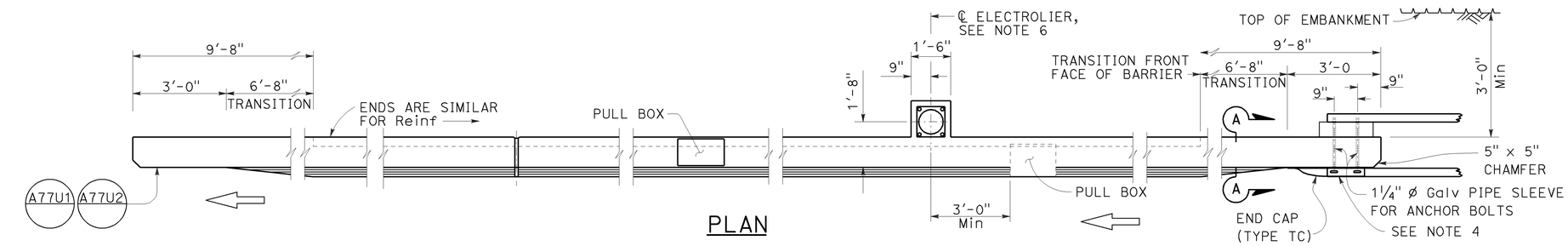


PLAN

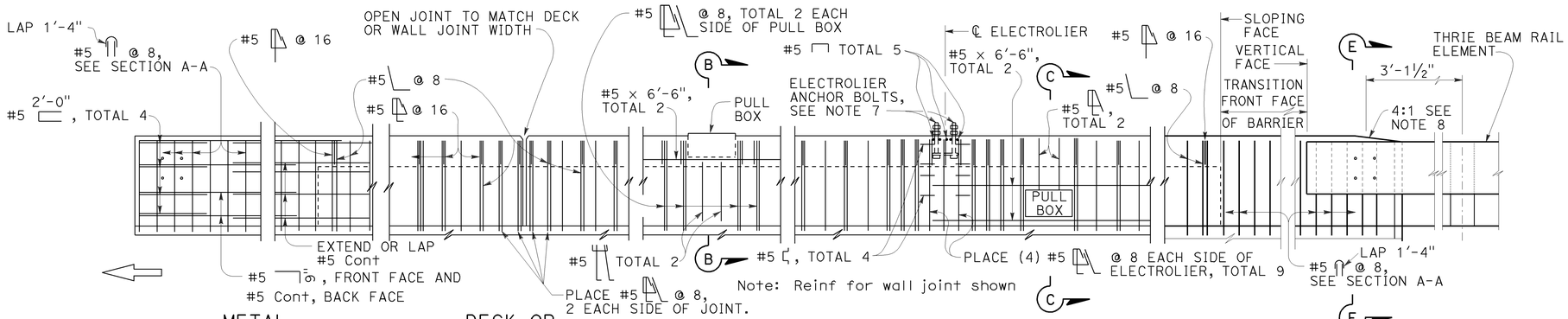


METAL RAILING CONNECTION

DECK OR WALL JOINT

ELECTROLIER
See Note F

TYPE 736A

ELEVATION

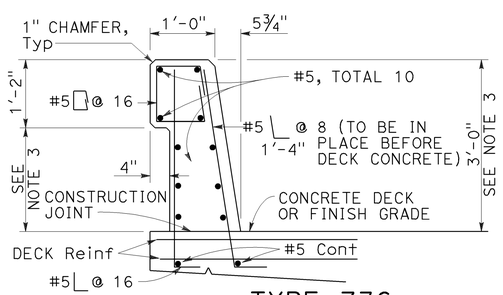


TYPE 736

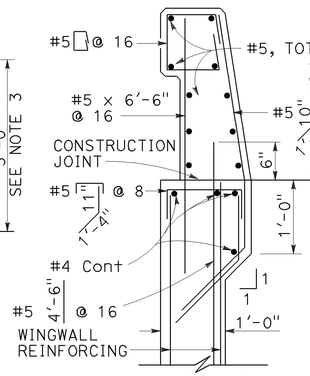


TYPE 736A

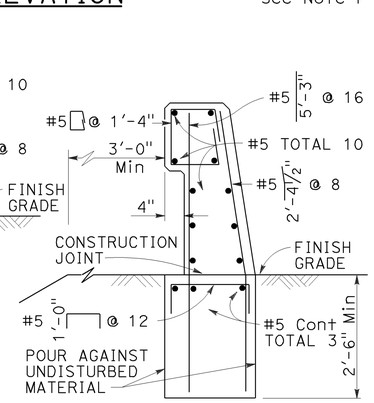


TYPE 736B

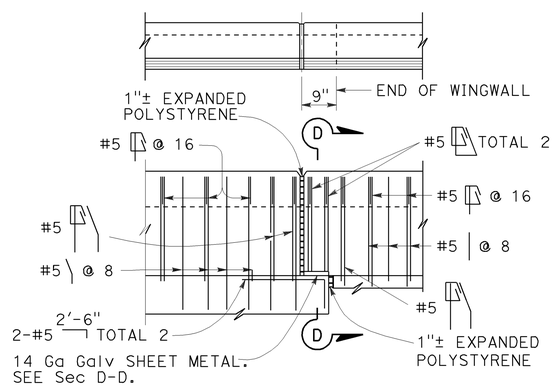


TYPE 736A TYPE 736B

## NOTES:

1. Walls are to be backfilled before barrier is placed.
2. Clearance to reinforcing steel in barrier to be 1", except as noted. Longitudinal reinforcement to stop at all expansion joints.
3. Dimensions may vary with roadway cross slope and with certain thickness of surfacing. See Project Plans.
4. For typical metal railing connection details not shown, see Revised Standard Plans RSP A77U1 and RSP A77U2.
5. See Standard Plans ES-9A, ES-9B, ES-9C, ES-9D and ES-9E for electrical details. The maximum number of conduits in the barrier is limited to two 2" conduits along with one 3" conduit. When a 3" conduit is used, it is restricted to the base of the barrier.
6. For electrolier mounting details, See Standard Plans ES-6A and ES-6B.
7. Minimum concrete edge distance, to the reinforcing shown, shall be maintained. Edge distance may be adjusted to accommodate increase in concrete cover for architectual treatment.
8. Taper the top of the end of the bridge railing at 4:1 to match the top elevation of the thrie beam rail element.

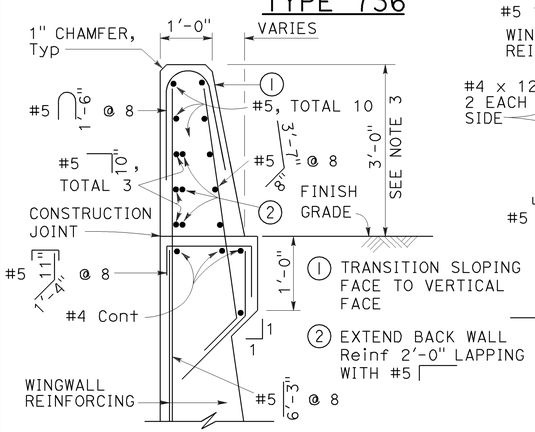


SECTION A-A

Details shown for barrier anchorage to Type 736A. Anchorgae for barrier Types 736 and 736B are similar to their respective details.

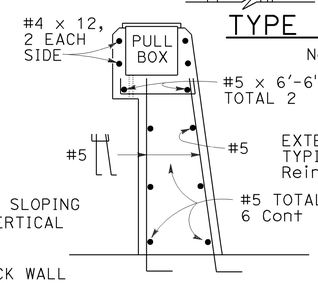


SECTION B-B

Note: Types 736A & 736B are similar to Type 736 except as noted

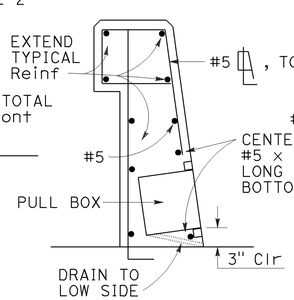


SECTION C-C
See Notes

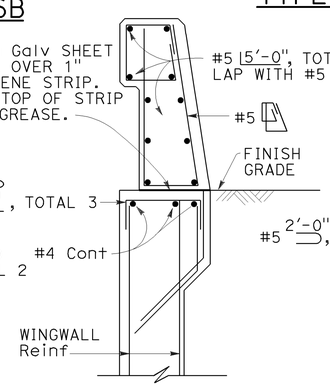


SECTION D-D

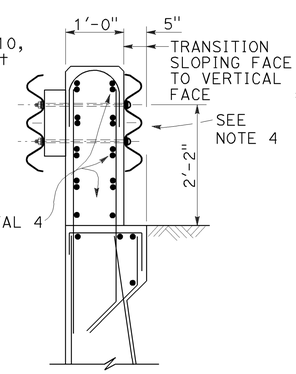


SECTION E-E
See Notes

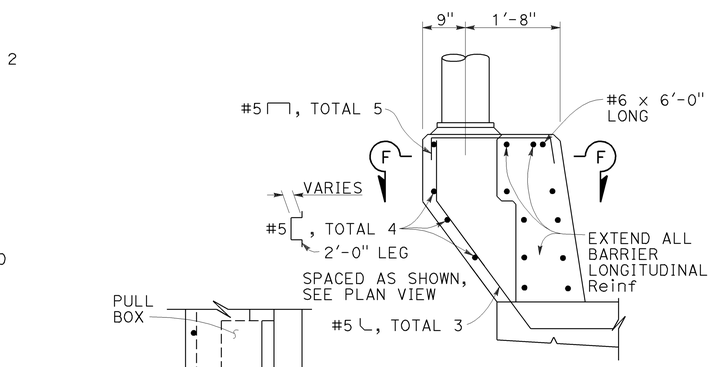


PEDESTAL ELEVATION

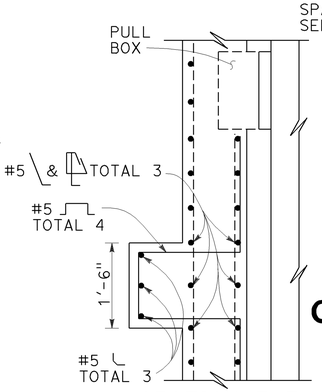


SECTION F-F

STATE OF CALIFORNIA
DEPARTMENT OF TRANSPORTATION

# CONCRETE BARRIER TYPE 736

NO SCALE

RSP B11-56 DATED NOVEMBER 15, 2013 SUPERSEDES RSP B11-56 DATED JULY 19, 2013 AND STANDARD PLAN B11-56 DATED MAY 20, 2011 - PAGE 298 OF THE STANDARD PLANS BOOK DATED 2010.

**REVISED STANDARD PLAN RSP B11-56**

**2010 REVISED STANDARD PLAN RSP B11-56**

10-4-13

| DIST | COUNTY | ROUTE | POST MILES TOTAL PROJECT | SHEET No. | TOTAL SHEETS |
|---|---|---|---|---|---|
| 03 | But | 70 | 26.7, 27.1 | 57 | 83 |

REGISTERED CIVIL ENGINEER 2-28-14 DATE

4-28-14
PLANS APPROVAL DATE

REGISTERED PROFESSIONAL ENGINEER Keith Stillmunkes No. 68878 Exp. 9-30-15 CIVIL STATE OF CALIFORNIA

*The State of California or its officers or agents shall not be responsible for the accuracy or completeness of electronic copies of this plan sheet.*

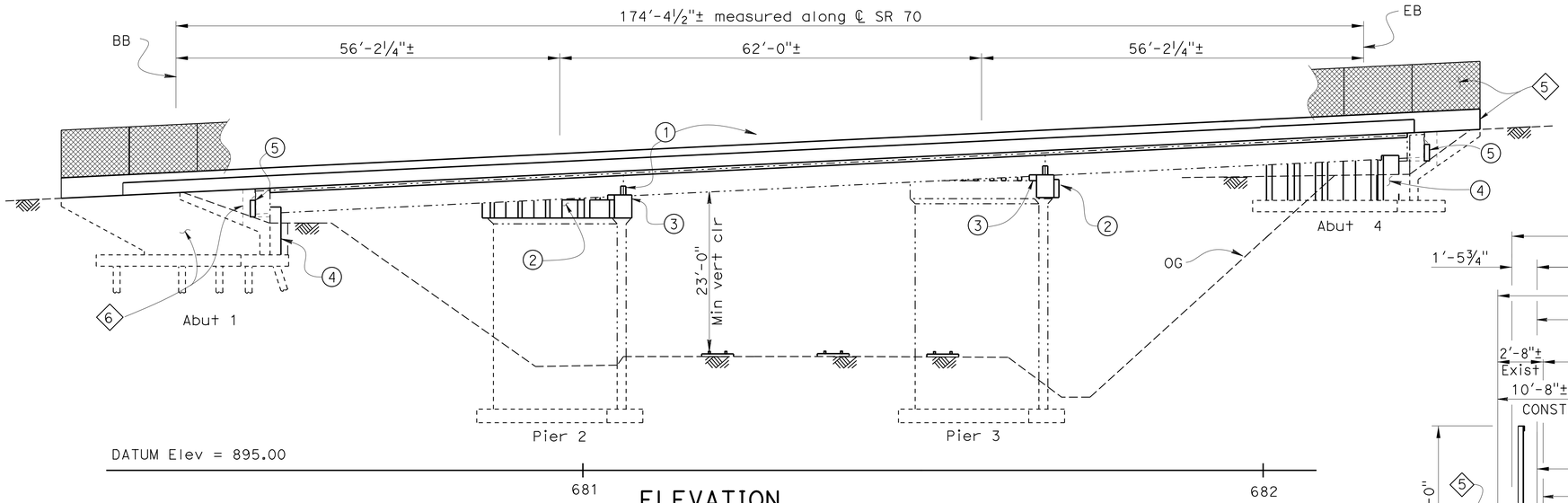


## ELEVATION

1"=10'

LEGEND:

- Indicates limits of existing concrete removal
- Indicates limits of 1" polyester concrete overlay
- Indicates existing
- Indicates point of Min vertical clearance

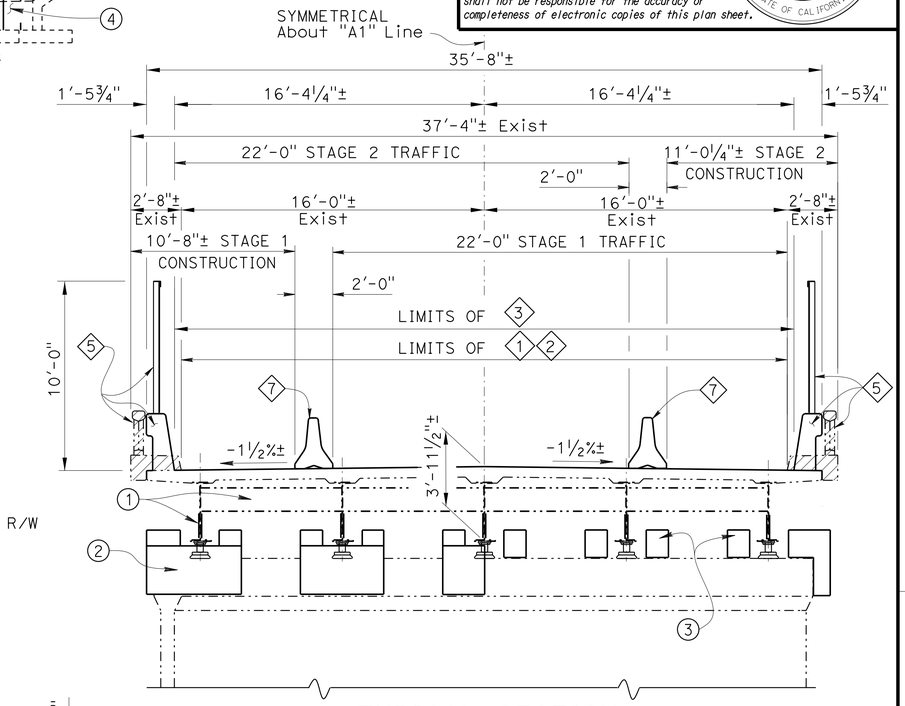


## TYPICAL SECTION

¼"=1'-0"

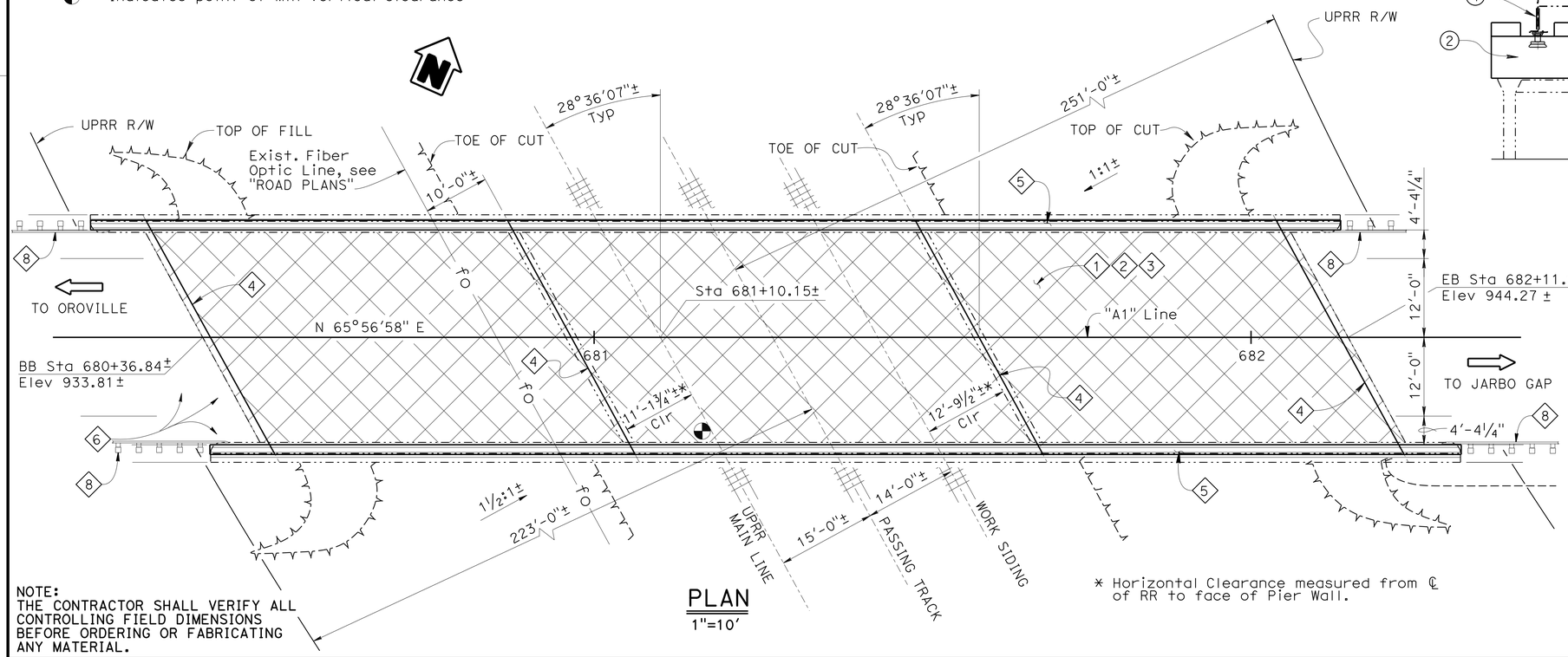


## PLAN

1"=10'

* Horizontal Clearance measured from ℄ of RR to face of Pier Wall.

◯ Indicates retrofit:

1. Steel plate restrainers, total 5 per bent.
2. Concrete catcher and shear block spans 1 & 3
3. Concrete shear block.
4. Concrete abutment seat extension.
5. Abutment lumber blocking between girder and backwall

◇ Indicates rehabilitation:

1. Remove 2"± AC surfacing.
2. Remove unsound concrete (deck) and place rapid setting concrete patch.
3. Place polyester concrete overlay ( 1" minimum thickness).
4. Clean expansion joints and install new joint seals Type B.
5. Remove existing Conc railing and build Conc Barrier (Type 736 Modified) with Chain Link Railing (Type 7 Modified).
6. Reconstruct Abutment 1, backwall and wingwalls.
7. Temporary Conc Barrier Type K, see "Road Plans".
8. MGS, See "ROAD PLANS"

NOTE:
THE CONTRACTOR SHALL VERIFY ALL CONTROLLING FIELD DIMENSIONS BEFORE ORDERING OR FABRICATING ANY MATERIAL.

Mike Beauchamp
DESIGN ENGINEER

| | | | | |
|---|---|---|---|---|
| DESIGN | Mario Guadamuz | Keith Stillmunkes | LOAD & RESISTANCE FACTOR DESIGN | LIVE LOADING: HL93 W/"LOW-BOY": PERMIT DESIGN VEHICLE |
| DETAILS | BY G Dickerson / B Jenko | CHECKED Keith Stillmunkes | LAYOUT BY Mario Guadamuz | CHECKED Keith Stillmunkes |
| QUANTITIES | BY Tracy Sanderson | CHECKED Jon Szabo | SPECIFICATIONS BY Karla Meier | PLANS AND SPECS COMPARED Karla Meier |

ORIGINAL SCALE IN INCHES FOR REDUCED PLANS 0 1 2 3

STATE OF CALIFORNIA
DEPARTMENT OF TRANSPORTATION

DIVISION OF ENGINEERING SERVICES
STRUCTURE DESIGN
DESIGN BRANCH 7

BRIDGE NO. 12-0137
POST MILE 26.99

# CHEROKEE OH (REHAB & RETROFIT)
## GENERAL PLAN

UNIT: 3592
PROJECT NUMBER & PHASE: 0300000474 1
CONTRACT NO.: 03-3E1201

DISREGARD PRINTS BEARING EARLIER REVISION DATES

REVISION DATES 7-01-13 1-15-14 10-22-13

SHEET 1 OF 16

STRUCTURES DESIGN GENERAL PLAN SHEET (ENGLISH) (REV.09-01-10)

FILE => 12-0137-a-gp.dgn

USERNAME => s119538 DATE PLOTTED => 06-MAY-2014 TIME PLOTTED => 09:27

| DIST | COUNTY | ROUTE | POST MILES TOTAL PROJECT | SHEET No. | TOTAL SHEETS |
|---|---|---|---|---|---|
| 03 | But | 70 | 26.7, 27.1 | 58 | 83 |

REGISTERED CIVIL ENGINEER 2-28-14 DATE

4-28-14
PLANS APPROVAL DATE

REGISTERED PROFESSIONAL ENGINEER Keith Stillmunkes No. 68878 Exp. 9-30-15 CIVIL STATE OF CALIFORNIA

*The State of California or its officers or agents shall not be responsible for the accuracy or completeness of scanned copies of this plan sheet.*

## INDEX TO PLANS


1. GENERAL PLAN
2. INDEX TO PLANS
3. FOUNDATION PLAN
4. STRUCTURE LAYOUT
5. ABUTMENT 1 LAYOUT
6. ABUTMENT 4 LAYOUT
7. ABUTMENT DETAILS NO. 1
8. WINGWALL DETAILS NO. 1
9. WINGWALL DETAILS NO. 2
10. EXCAVATION & BACKFILL
11. PIER LAYOUT
12. PIER DETAILS NO. 1
13. PIER DETAILS NO. 2
14. CONCRETE BARRIER TYPE 736 MOD
15. DECK REHABILITATION DETAILS NO.1
16. DECK REHABILITATION DETAILS NO.2


## STANDARD PLANS DATED MAY 2010

| | | |
|---|---|---|
| | A10A | ABBREVIATIONS (SHEET 1 OF 2) |
| RSP | A10B | ABBREVIATIONS (SHEET 2 OF 2) |
| | A10C | LINES AND SYMBOLS (SHEET 1 OF 3) |
| | A10D | LINES AND SYMBOLS (SHEET 2 OF 3) |
| | A10E | LINES AND SYMBOLS (SHEET 3 OF 3) |
| | A62C | LIMITS OF PAYMENT FOR EXCAVATION AND BACKFILL |
| RSP | A77U1 | MIDWEST GUARDRAIL SYSTEM-CONNECTIONS TO BRIDGE RAILING WITHOUT SIDEWALK DETAILS NO. 1 |
| RSP | A77U2 | MIDWEST GUARDRAIL SYSTEM-CONNECTIONS TO BRIDGE RAILING WITHOUT SIDEWALK DETAILS NO. 2 |
| | B6-21 | JOINT SEALS (MAXIMUM MOVEMENT RATING = 2") |
| | B11-52 | CHAIN LINK RAILING TYPE 7 |
| RSP | B11-56 | CONCRETE BARRIER TYPE 736 |
| | T3A | TEMPORARY RAILING (TYPE K) |
| | T3B | TEMPORARY RAILING (TYPE K) |

STANDARD PLAN SHEET No.

DETAIL No.

QUANTITIES

| | | |
|---|---|---|
| PUBLIC SAFETY PLAN | LUMP | SUM |
| RAPID SETTING CONCRETE (PATCH) | 46 | CF |
| REMOVE ASPHALT CONCRETE SURFACING | 5,525 | SQFT |
| REMOVE UNSOUND CONCRETE | 46 | CF |
| PREPARE CONCRETE BRIDGE DECK SURFACE | 5,706 | SQFT |
| FURNISH POLYESTER CONCRETE OVERLAY | 475 | CF |
| PLACE POLYESTER CONCRETE OVERLAY | 5,706 | SQFT |
| BRIDGE REMOVAL (PORTION), LOCATION B | LUMP | SUM |
| STRUCTURE EXCAVATION (BRIDGE) | 24 | CY |
| STRUCTURE BACKFILL (BRIDGE) | 20 | CY |
| STRUCTURAL CONCRETE, BRIDGE | 36 | CY |
| DRILL AND BOND DOWEL | 255 | LF |
| CLEAN EXPANSION JOINT | 150 | LF |
| JOINT SEAL (MR 1") | 153 | LF |
| BAR REINFORCING STEEL (BRIDGE) | 5,500 | LB |
| BAR REINFORCING STEEL (EPOXY COATED)(BRIDGE) | 222 | LB |
| STRUCTURAL STEEL (BRIDGE) | 937 | LB |
| ABUTMENT LUMBER BLOCKING | 1.18 | MFBM |
| CLEAN STRUCTURAL STEEL (EXISTING BRIDGE) | LUMP | SUM |
| CLEAN AND PAINT STRUCTURAL STEEL | LUMP | SUM |
| CHAIN LINK RAILING (TYPE 7 MODIFIED) | 383 | LF |
| CONCRETE BARRIER (TYPE 736 MODIFIED) | 386 | LF |

NOTE:
THE CONTRACTOR SHALL VERIFY ALL CONTROLLING FIELD DIMENSIONS BEFORE ORDERING OR FABRICATING ANY MATERIAL.

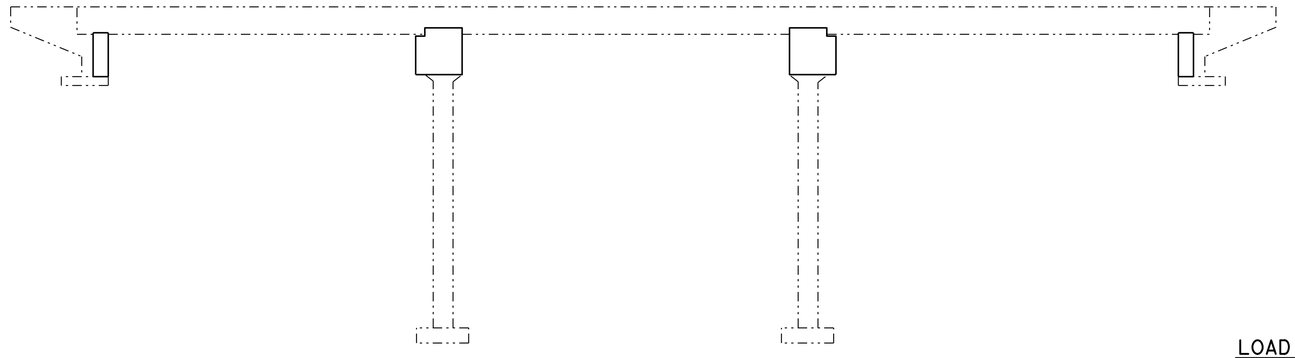

LEGEND:

Indicates existing

Structural Concrete, Bridge (4000 psi @ 28 days)

## CONCRETE STRENGTH AND TYPE LIMITS

No Scale

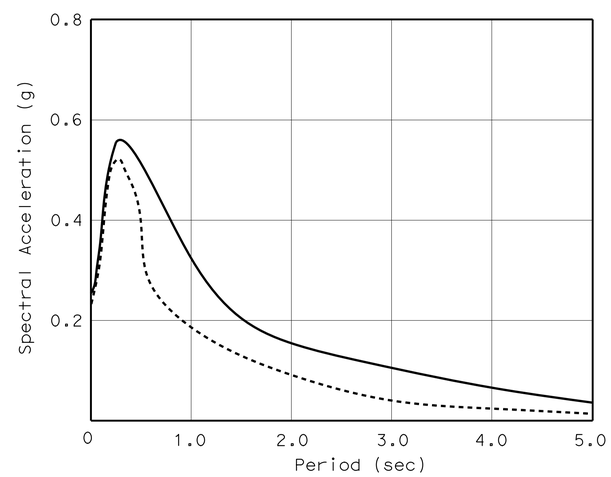


## SITE SPECIFIC ACCELERATION RESPONSE SPECTRA

Abut 1 PGA = 0.24 g

Piers 2, 3 & Abut 1 PGA = 0.21 g

## GENERAL NOTES
## LOAD AND RESISTANCE FACTOR DESIGN

**DESIGN:**
AASHTO LRFD Bridge Design Specifications 4th edition and the California Amendments preface dated 2011

**SEISMIC DESIGN:**
Caltrans Seismic Design Criteria (SDC), Version 1.7 dated 2013

**DEAD LOAD:**
Do not include allowance for future wearing surface.

**LIVE LOADING:** HL 93 and P-15 permit design vehicle

EXISTING STRUCTURAL STEEL: fy = 33 ksi

NEW STRUCTURAL STEEL: fy = 36 ksi

EXISTING CONCRETE: f'c = 5 ksi

NEW CONCRETE: f'c = 4 ksi

EXISTING REINFORCING STEEL: fy = 40 ksi

NEW REINFORCING STEEL: fy = 60 ksi

SEISMIC LOADING:

Soil profile: Abutment 1 $V_{s30}$ = 890 ft/sec
Pier 2 , 3 & Abut 4 $V_{s30}$ = 1840 ft/sec
Moment Magnitude : 6.5

Peak Ground Acceleration:
Abut 1 PGA = 024.g
Pier 2, 3 & Abut 4 PGA = 0.21g

Site Specific Acceleration Response Spectra as shown.

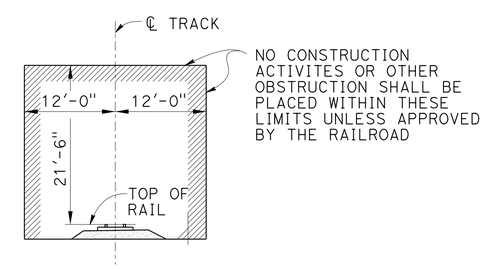


## MINIMUM CONSTRUCTION CLEARANCE ENVELOPE

(Normal to railroad tracks)

| | | | |
|---|---|---|---|
| DESIGN | BY Mario Guadamuz | CHECKED Keith Stillmunkes | |
| DETAILS | BY B. Jenko \ Y. Feng | CHECKED Keith Stillmunkes | |
| QUANTITIES | BY Tracy Sanderson | CHECKED Jon Szabo | |

STATE OF CALIFORNIA
DEPARTMENT OF TRANSPORTATION

DIVISION OF ENGINEERING SERVICES
STRUCTURE DESIGN
DESIGN BRANCH 7

BRIDGE NO. 12-0137
POST MILE 26.99

# CHEROKEE OH (REHAB & RETROFIT)
## INDEX TO PLANS

STRUCTURES DESIGN DETAIL SHEET (ENGLISH) (REV. 09-01-10)

ORIGINAL SCALE IN INCHES FOR REDUCED PLANS 0 1 2 3

UNIT: 3592
PROJECT NUMBER & PHASE: 0300000474 1
CONTRACT NO.: 03-3E1201

DISREGARD PRINTS BEARING EARLIER REVISION DATES

REVISION DATES 10-22-13 11-25-13 1-15-14

SHEET 2 OF 16

FILE => 12-0137-a-itp_detail-sheet.dgn

USERNAME => s119538 DATE PLOTTED => 06-MAY-2014 TIME PLOTTED => 09:27

| DIST | COUNTY | ROUTE | POST MILES TOTAL PROJECT | SHEET No. | TOTAL SHEETS |
|---|---|---|---|---|---|
| 03 | But | 70 | 26.7, 27.1 | 59 | 83 |

REGISTERED CIVIL ENGINEER 2-28-14 DATE

4-28-14
PLANS APPROVAL DATE

REGISTERED PROFESSIONAL ENGINEER Keith Stillmunkes No. 68878 Exp. 9-30-15 CIVIL STATE OF CALIFORNIA

*The State of California or its officers or agents shall not be responsible for the accuracy or completeness of electronic copies of this plan sheet.*

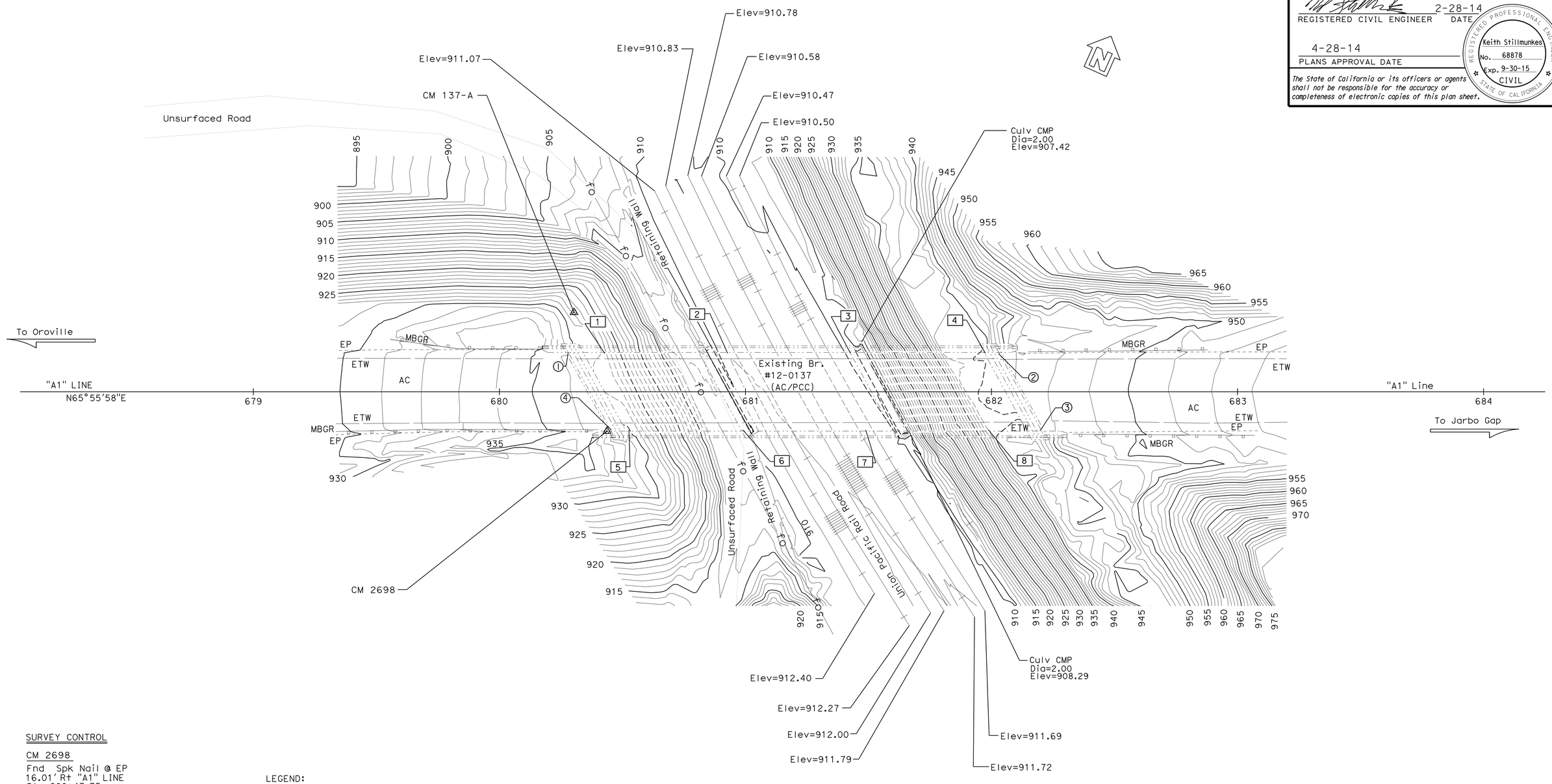


SURVEY CONTROL

CM 2698
Fnd Spk Nail @ EP
16.01' Rt "A1" LINE
Sta 680+43.75
N 2,364,277.34
E 6,688,159.72
Elev=936.48

CM 137-A
Fnd Caltrans AL-Cap
32.27' Lt "A1" LINE
Sta 680+30.32
N 2,364,315.94
E 6,688,127.76
Elev=928.26

LEGEND:

—fo—fo— DESIGNATES EXISTING FIBER OPTIC LINE

Bridge Location #12-0137 (PN Points)

1. 15.92' Lt "A1" Line, Sta 680+27.96, Elev=936.28 (AC)
2. 15.50' Lt "A1" Line, Sta 682+02.86, Elev=946.56 (AC)
3. 15.89' Rt "A1" Line, Sta 682+19.72, Elev=947.47 (AC)
4. 15.43' Rt "A1" Line, Sta 680+45.44, Elev=936.75 (AC)

Bridge Soffit Elev (Bottom of Girder)

| | | | |
|---|---|---|---|
| 1 | 932.87 | 2 | 935.97 |
| 3 | 938.98 | 4 | 942.32 |
| 5 | 933.34 | 6 | 936.36 |
| 7 | 939.36 | 8 | 942.32 |

PRELIMINARY INVESTIGATION SECTION

| | | | | | |
|---|---|---|---|---|---|
| SCALE 1"=20' | VERT.DATUM NAVD88 | PHOTOGRAMMETRY AS OF: X | | | |
| | HORZ.DATUM NAD83 | SURVEYED | BY DISTRICT | CHECKED | BY SANG SOU 11/2013 |
| ALIGNMENT TIES Dist. Traverse Sheet | | DRAFTED | BY SHARON ZHENG 11/2013 | CHECKED | BY JOHN BORDEN 11/2013 |

| | | |
|---|---|---|
| DESIGN | BY Keith Stillmunkes | CHECKED M. Guadamuz |
| DETAILS | BY Yingjue Feng | CHECKED M. Guadamuz |
| QUANTITIES | BY Tracy Sanderson | CHECKED Jon Szabo |

STATE OF CALIFORNIA
DEPARTMENT OF TRANSPORTATION

DIVISION OF ENGINEERING SERVICES
STRUCTURE DESIGN
DESIGN BRANCH 7

BRIDGE NO. 12-0137
POST MILE PM 26.99

# CHEROKEE OH (RETROFIT)
# FOUNDATION PLAN

STRUCTURES FOUNDATION PLAN SHEET (ENGLISH) (REV. 09-01-10)

X

ORIGINAL SCALE IN INCHES FOR REDUCED PLANS 0 1 2 3

UNIT: 3592
PROJECT NUMBER & PHASE: 03 0000 0474 1 CONTRACT NO.: 03-3E1201

DISREGARD PRINTS BEARING EARLIER REVISION DATES

REVISION DATES 11/27/13 1/15/14

SHEET 3 OF 16

FILE => 12-0137-b-fpl01.dgn

USERNAME => s119538 DATE PLOTTED => 06-MAY-2014 TIME PLOTTED => 09:27

| DIST | COUNTY | ROUTE | POST MILES TOTAL PROJECT | SHEET No. | TOTAL SHEETS |
|---|---|---|---|---|---|
| 03 | But | 70 | 26.7, 27.1 | 60 | 83 |

REGISTERED CIVIL ENGINEER 2-28-14 DATE

4-28-14
PLANS APPROVAL DATE

REGISTERED PROFESSIONAL ENGINEER
Keith Stillmunkes
No. 68878
Exp. 9-30-15
CIVIL
STATE OF CALIFORNIA

*The State of California or its officers or agents shall not be responsible for the accuracy or completeness of scanned copies of this plan sheet.*

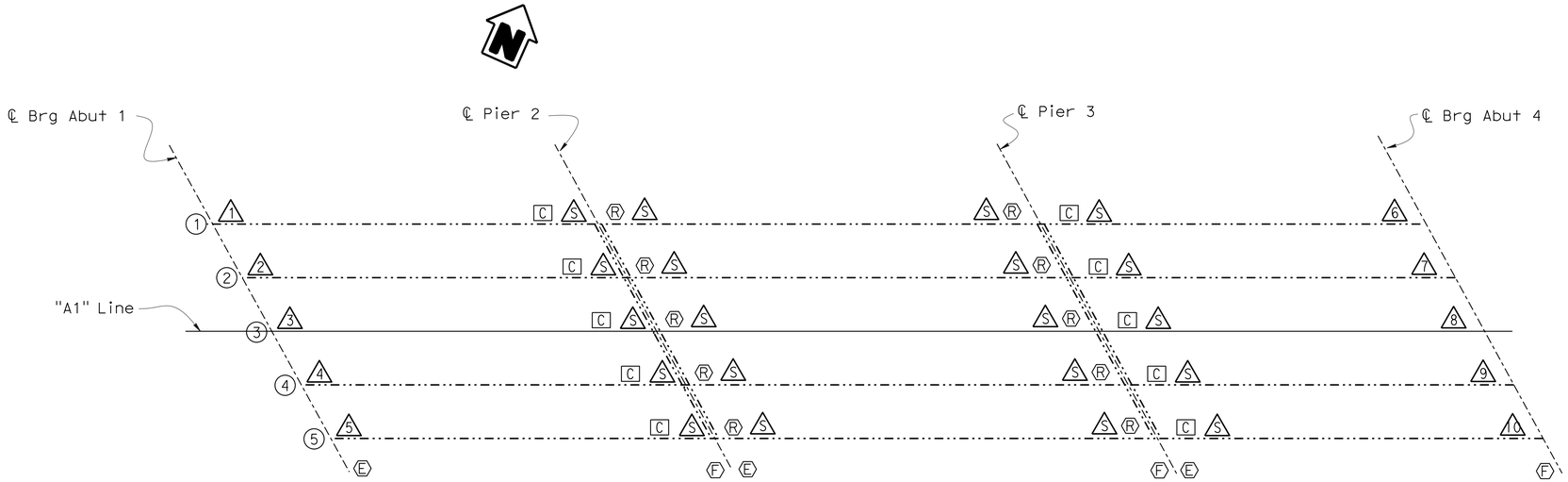


## STRUCTURE LAYOUT

1" = 10'

LEGEND:

- ◯ - Indicates girder number
- [C] - Indicates catcher block
- △S - Indicates shear block
- △D - Indicates abutment seat extension number
- Ⓡ - Indicates steel plate restrainers
- Ⓔ - Indicates expansion bearings
- Ⓕ - Indicates fixed bearings

NOTE:
THE CONTRACTOR SHALL VERIFY ALL CONTROLLING FIELD DIMENSIONS BEFORE ORDERING OR FABRICATING ANY MATERIAL.

| | BY | CHECKED |
|---|---|---|
| DESIGN | Mario Guadamuz | Keith Stillmunkes |
| DETAILS | Bruno Jenko | Keith Stillmunkes |
| QUANTITIES | Tracy Sanderson | Jon Szabo |

STATE OF CALIFORNIA
DEPARTMENT OF TRANSPORTATION

DIVISION OF ENGINEERING SERVICES
STRUCTURE DESIGN
DESIGN BRANCH 7

BRIDGE NO. 12-0137
POST MILE 26.99

# CHEROKEE OH (REHAB & RETROFIT)

## STRUCTURE LAYOUT

STRUCTURES DESIGN DETAIL SHEET (ENGLISH) (REV. 09-01-10)

ORIGINAL SCALE IN INCHES FOR REDUCED PLANS 0 1 2 3

UNIT: 3592
PROJECT NUMBER & PHASE: 0300000474 1
CONTRACT NO.: 03-3E1201

DISREGARD PRINTS BEARING EARLIER REVISION DATES

REVISION DATES: 10-22-13 11-25-13

SHEET 4 OF 16

FILE => 12-0137-c-sp01_detail-sheet.dgn

USERNAME => s119538 DATE PLOTTED => 06-MAY-2014 TIME PLOTTED => 09:27

| DIST | COUNTY | ROUTE | POST MILES TOTAL PROJECT | SHEET No. | TOTAL SHEETS |
|---|---|---|---|---|---|
| 03 | But | 70 | 26.7, 27.1 | 61 | 83 |

REGISTERED CIVIL ENGINEER 2-28-14 DATE

4-28-14
PLANS APPROVAL DATE

REGISTERED PROFESSIONAL ENGINEER Keith Stillmunkes No. 68878 Exp. 9-30-15 CIVIL STATE OF CALIFORNIA

*The State of California or its officers or agents shall not be responsible for the accuracy or completeness of scanned copies of this plan sheet.*

NOTES:

1. For Sections not shown here see "ABUTMENT DETAILS NO. 1" sheet

LEGEND:

(1) Abutment seat extension designation

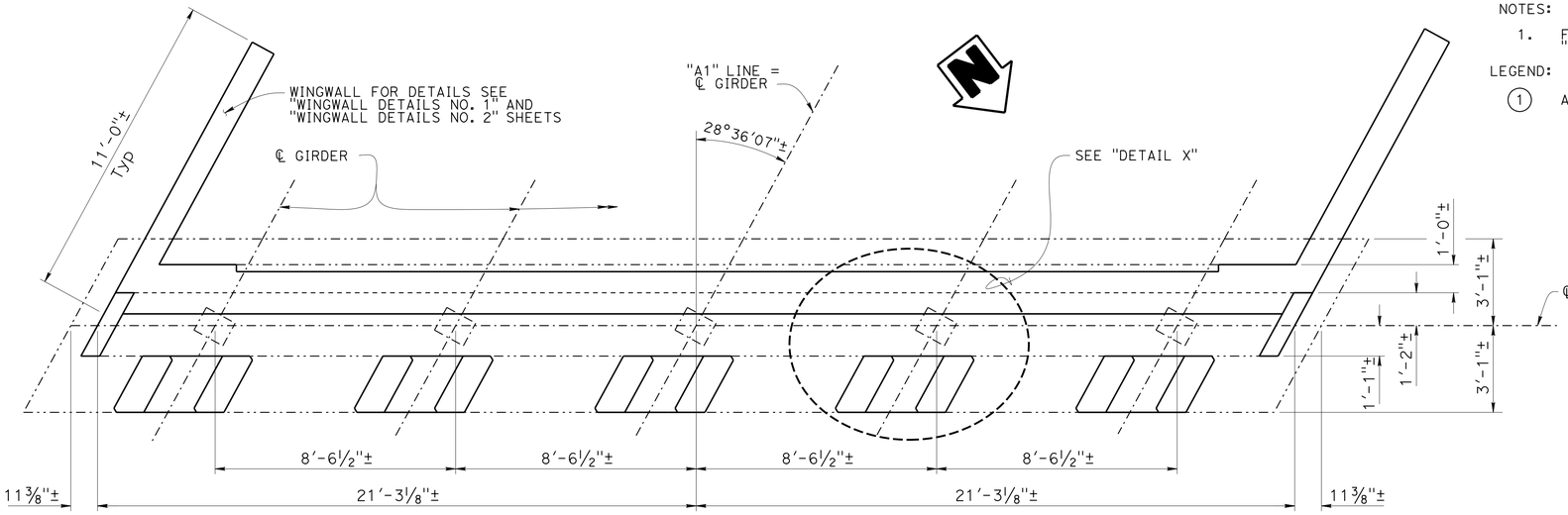


## PLAN

⅜" = 1'-0"

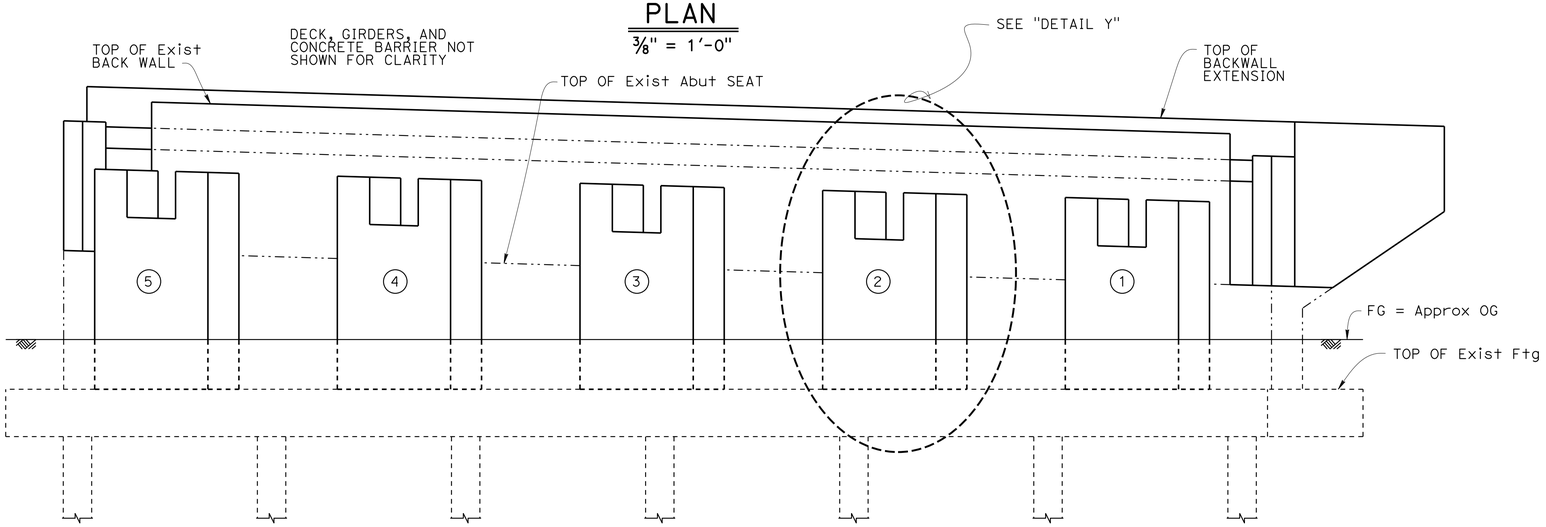


## ELEVATION

⅜" = 1'-0"

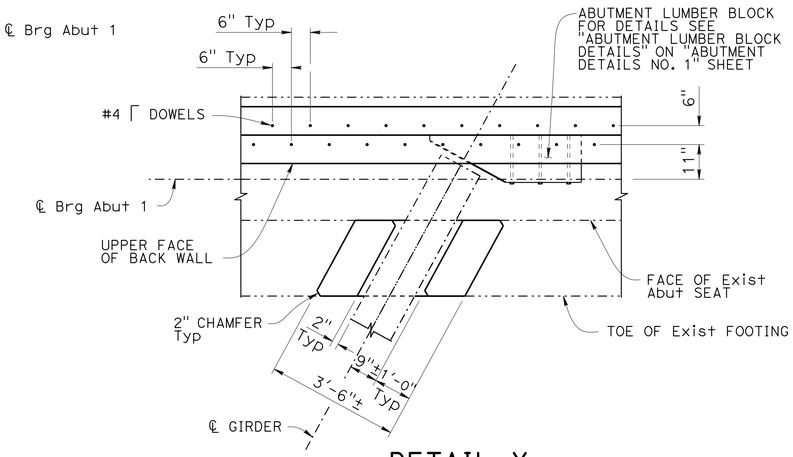


## DETAIL X

½" = 1'-0"

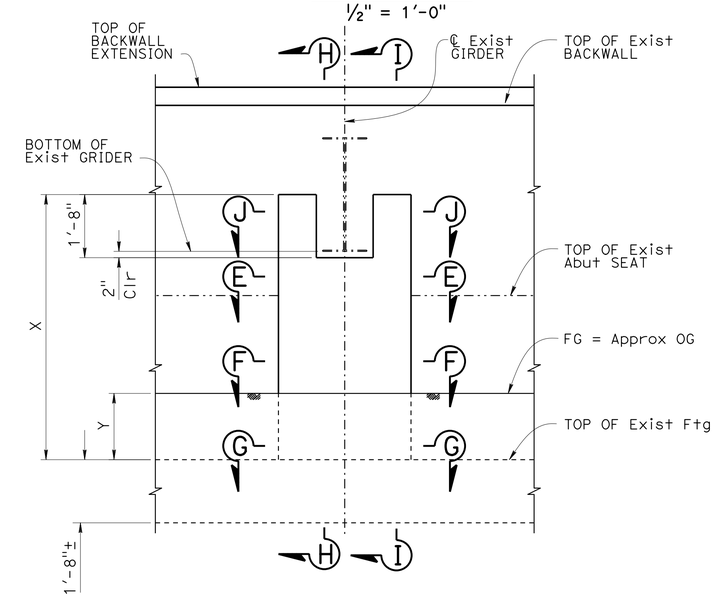


## DETAIL Y

½" = 1'-0"

ELEVATION SHOWN IS NORMAL TO ℄ Exist GIRDER

TABLE A

| ABUTMENT SEAT EXTENSION DESIGNATION | X | Y |
|---|---|---|
| 1 | 6'-4"± | 1'-9"± |
| 2 | 6'-7"± | 1'-9"± |
| 3 | 6'-10"± | 1'-9"± |
| 4 | 7'-1"± | 1'-9"± |
| 5 | 7'-3"± | 1'-9"± |

NOTE:
THE CONTRACTOR SHALL VERIFY ALL CONTROLLING FIELD DIMENSIONS BEFORE ORDERING OR FABRICATING ANY MATERIAL.

| | BY | CHECKED |
|---|---|---|
| DESIGN | Manode Kodsuntie | Keith Stillmunkes |
| DETAILS | J. Yang \ Y. Feng | Keith Stillmunkes |
| QUANTITIES | Tracy Sanderson | Jon Szabo |

STATE OF CALIFORNIA
DEPARTMENT OF TRANSPORTATION

DIVISION OF ENGINEERING SERVICES
STRUCTURE DESIGN
DESIGN BRANCH 7

BRIDGE NO. 12-0137
POST MILE 26.99

# CHEROKEE OH (REHAB & RETROFIT)

## ABUTMENT 1 LAYOUT

STRUCTURES DESIGN DETAIL SHEET (ENGLISH) (REV. 09-01-10)

ORIGINAL SCALE IN INCHES FOR REDUCED PLANS 0 1 2 3

UNIT: 3592
PROJECT NUMBER & PHASE: 0300000474 1 CONTRACT NO.: 03-3E1201

DISREGARD PRINTS BEARING EARLIER REVISION DATES

REVISION DATES 10-22-13 11-21-13 11-26-13 1-15-14

SHEET 5 OF 16

FILE => 12-0137-f-a01_f-abutment 1-sheet.dgn

USERNAME => s119538 DATE PLOTTED => 06-MAY-2014 TIME PLOTTED => 09:27

| DIST | COUNTY | ROUTE | POST MILES TOTAL PROJECT | SHEET No. | TOTAL SHEETS |
|---|---|---|---|---|---|
| 03 | But | 70 | 26.7, 27.1 | 62 | 83 |

REGISTERED CIVIL ENGINEER 2-28-14 DATE

4-28-14
PLANS APPROVAL DATE

REGISTERED PROFESSIONAL ENGINEER Keith Stillmunkes No. 68878 Exp. 9-30-15 CIVIL STATE OF CALIFORNIA

*The State of California or its officers or agents shall not be responsible for the accuracy or completeness of scanned copies of this plan sheet.*

LEGEND:

(6) Abutment seat extension designation

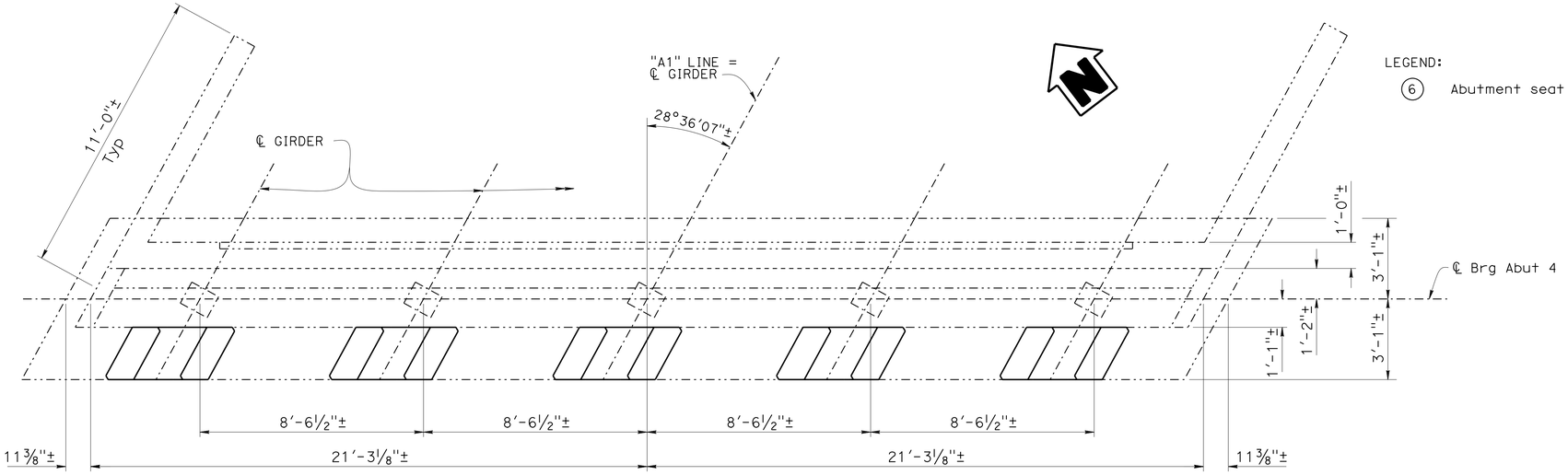


## PLAN

⅜" = 1'-0"

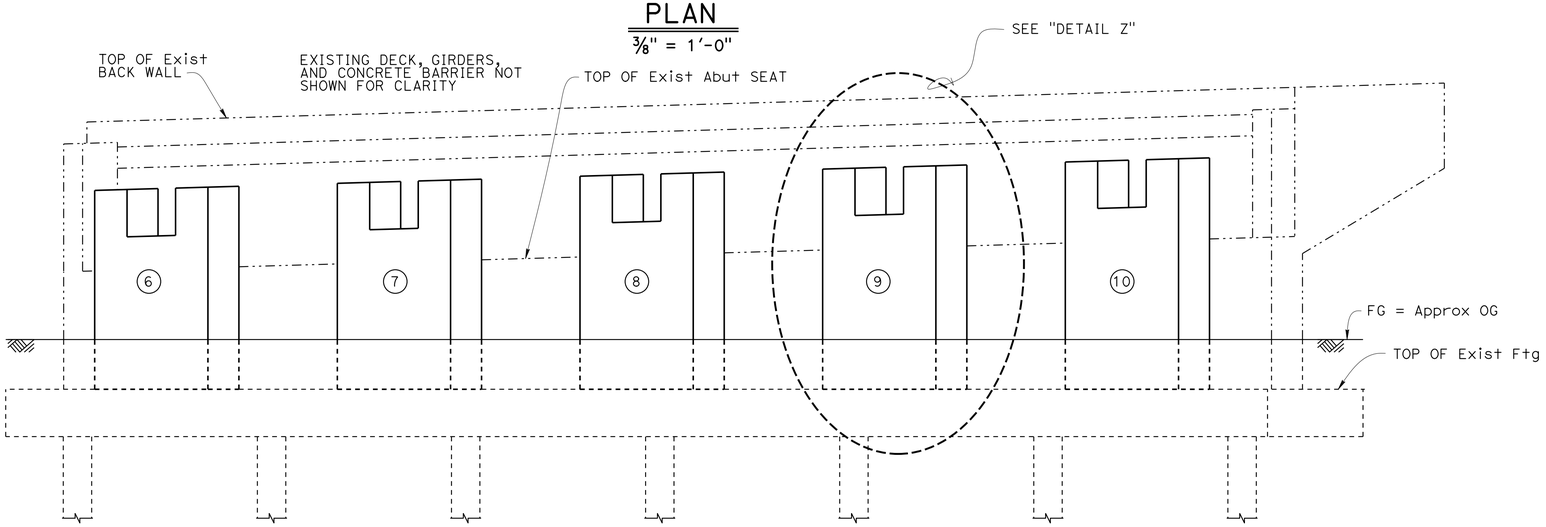


## ELEVATION

⅜" = 1'-0"

| TABLE B | | |
|---|---|---|
| ABUTMENT SEAT EXTENSION DESIGNATION | X | Y |
| 6 | 7'-0"± | 1'-9"± |
| 7 | 7'-3"± | 1'-9"± |
| 8 | 7'-6"± | 1'-9"± |
| 9 | 7'-9"± | 1'-9"± |
| 10 | 8'-0"± | 1'-9"± |

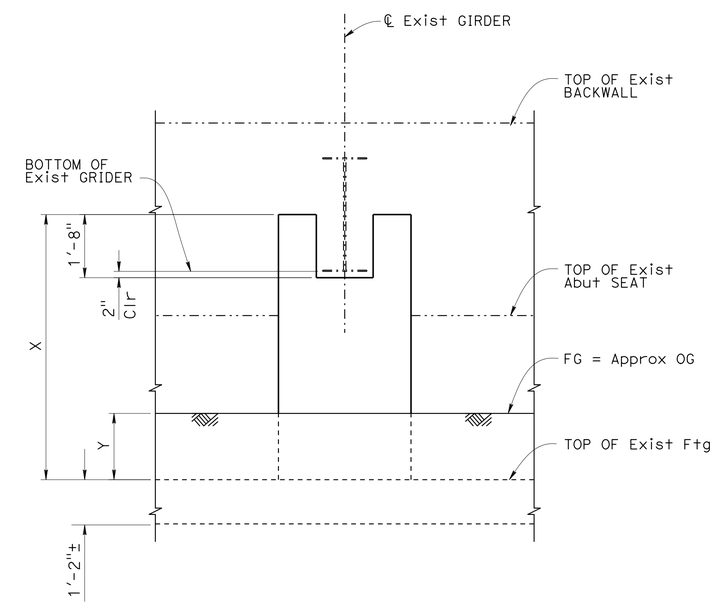


## DETAIL Z

½" = 1'-0"

ELEVATION SHOWN IS NORMAL TO ℄ Exist GIRDER

NOTE:
THE CONTRACTOR SHALL VERIFY ALL CONTROLLING FIELD DIMENSIONS BEFORE ORDERING OR FABRICATING ANY MATERIAL.

| | BY | CHECKED |
|---|---|---|
| DESIGN | Manode Kodsuntie | Keith Stillmunkes |
| DETAILS | J. Yang \ Y. Feng | Keith Stillmunkes |
| QUANTITIES | Tracy Sanderson | Jon Szabo |

STATE OF CALIFORNIA
DEPARTMENT OF TRANSPORTATION

DIVISION OF ENGINEERING SERVICES
STRUCTURE DESIGN
DESIGN BRANCH 7

BRIDGE NO. 12-0137
POST MILE 26.99

# CHEROKEE OH (REHAB & RETROFIT)

## ABUTMENT 4 LAYOUT

STRUCTURES DESIGN DETAIL SHEET (ENGLISH) (REV. 09-01-10)

ORIGINAL SCALE IN INCHES FOR REDUCED PLANS 0 1 2 3

UNIT: 3592
PROJECT NUMBER & PHASE: 0300000474 1
CONTRACT NO.: 03-3E1201

DISREGARD PRINTS BEARING EARLIER REVISION DATES

REVISION DATES 10-22-13 11-21-13 11-26-13 1-15-14

SHEET 6 OF 16

FILE => 12-0137-f-a04_f-abutment 1-sheet.dgn

USERNAME => s119538 DATE PLOTTED => 06-MAY-2014 TIME PLOTTED => 09:27

| DIST | COUNTY | ROUTE | POST MILES TOTAL PROJECT | SHEET No. | TOTAL SHEETS |
|---|---|---|---|---|---|
| 03 | But | 70 | 26.7, 27.1 | 63 | 83 |

REGISTERED CIVIL ENGINEER 2-28-14 DATE

4-28-14
PLANS APPROVAL DATE

REGISTERED PROFESSIONAL ENGINEER Keith Stillmunkes No. 68878 Exp. 9-30-15 CIVIL STATE OF CALIFORNIA

*The State of California or its officers or agents shall not be responsible for the accuracy or completeness of scanned copies of this plan sheet.*

NOTES:

1. For location of Section cuts see "ABUTMENT 1 LAYOUT" sheet
2. Abutment 1 shown, Abutment 2 similar

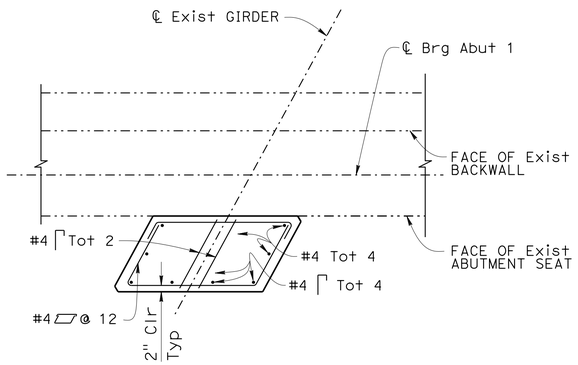


## SECTION E-E
½" = 1'-0"

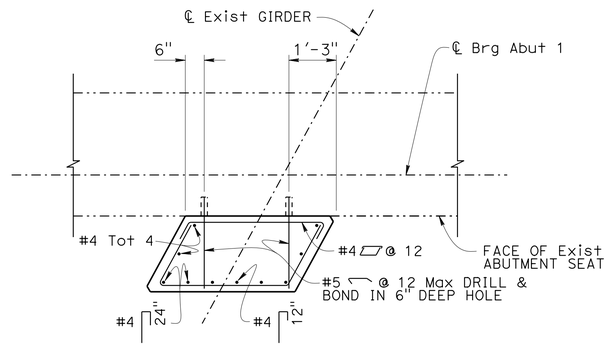


## SECTION F-F
½" = 1'-0"

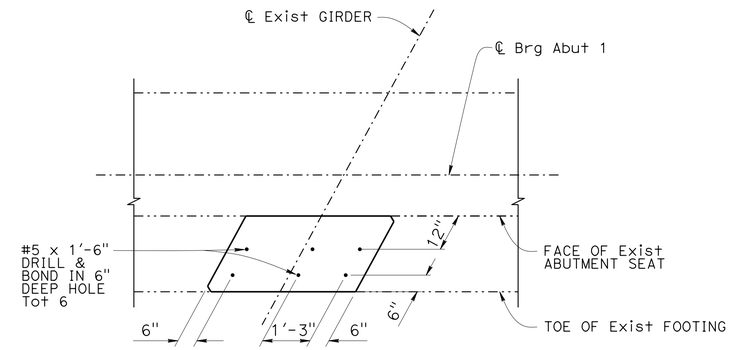


## SECTION G-G
½" = 1'-0"

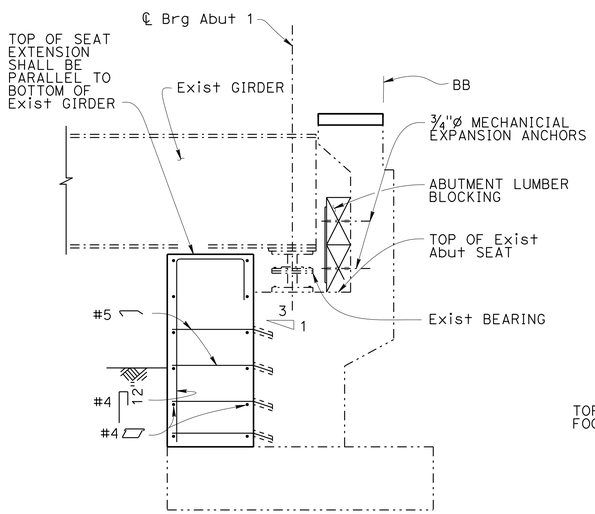


## SECTION H-H
½" = 1'-0"

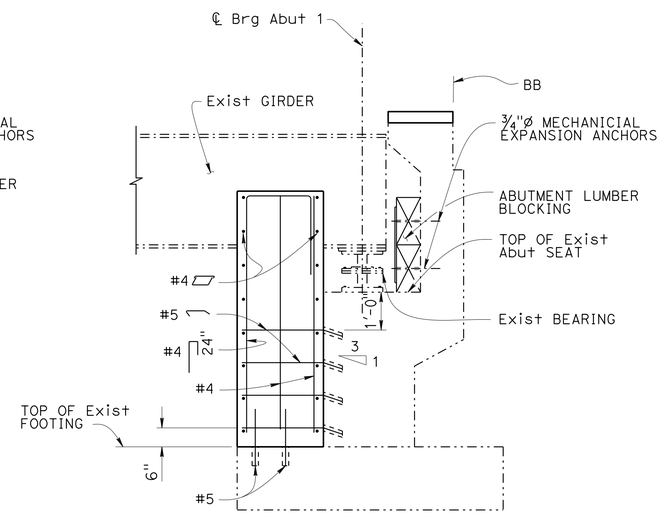


## SECTION I-I
½" = 1'-0"

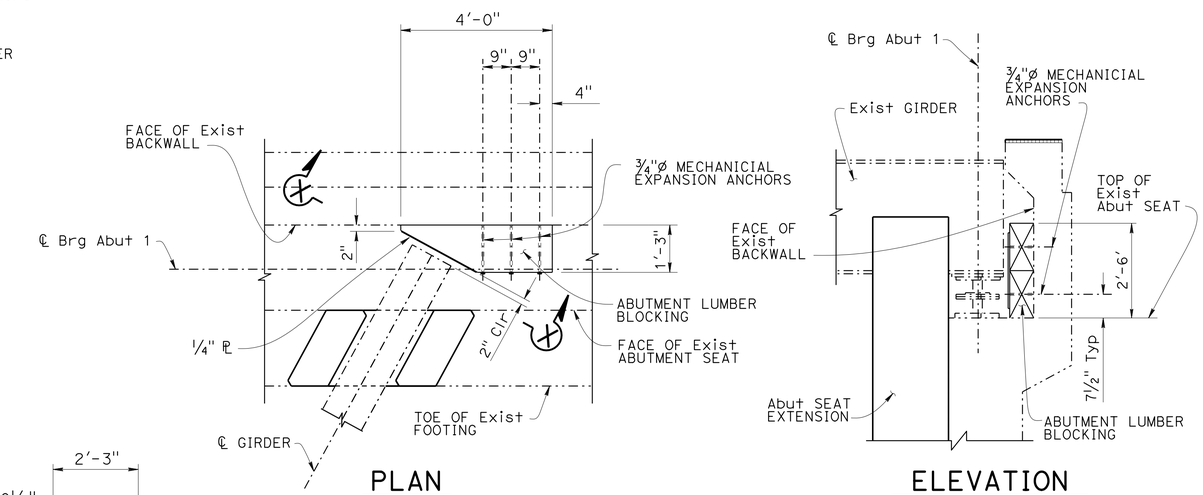


PLAN ELEVATION

## ABUTMENT LUMBER BLOCKING DETAILS
½" = 1'-0"

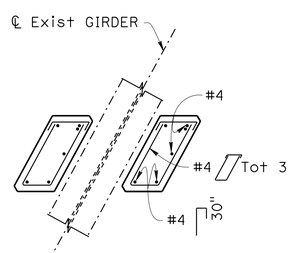


## SECTION J-J
½" = 1'-0"

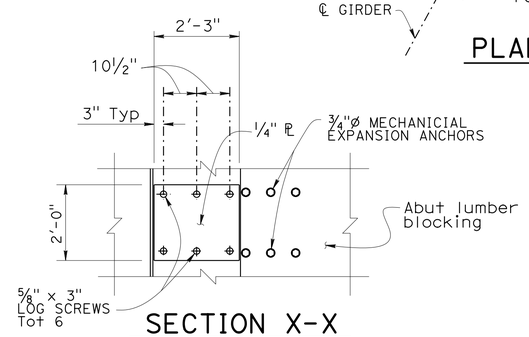


## SECTION X-X
No scale

Notes:

1. Mill timber to obtain 2" clearance between steel plate and end of girder. Max milling on any face not to exceed ¼".

NOTE:
THE CONTRACTOR SHALL VERIFY ALL CONTROLLING FIELD DIMENSIONS BEFORE ORDERING OR FABRICATING ANY MATERIAL.

| | BY | CHECKED |
|---|---|---|
| DESIGN | Manode Kodsuntie | Keith Stillmunkes |
| DETAILS | J. Yang \ Y. Feng | Keith Stillmunkes |
| QUANTITIES | Tracy Sanderson | Jon Szabo |

STATE OF CALIFORNIA
DEPARTMENT OF TRANSPORTATION

DIVISION OF ENGINEERING SERVICES
STRUCTURE DESIGN
DESIGN BRANCH 7

BRIDGE NO. 12-0137
POST MILE 26.99

# CHEROKEE OH (REHAB & RETROFIT)
## ABUTMENT DETAILS NO. 1

STRUCTURES DESIGN DETAIL SHEET (ENGLISH) (REV. 09-01-10)

ORIGINAL SCALE IN INCHES FOR REDUCED PLANS 0 1 2 3

UNIT: 3592
PROJECT NUMBER & PHASE: 0300000474 1
CONTRACT NO.: 03-3E1201

DISREGARD PRINTS BEARING EARLIER REVISION DATES

REVISION DATES 10-22-13 11-21-13 11-26-13 1-15-14

SHEET 7 OF 16

FILE => 12-0137-f-adet01_f-abutment details 1-sheet.dgn

USERNAME => s119538 DATE PLOTTED => 06-MAY-2014 TIME PLOTTED => 09:27

| DIST | COUNTY | ROUTE | POST MILES TOTAL PROJECT | SHEET No. | TOTAL SHEETS |
|---|---|---|---|---|---|
| 03 | But | 70 | 26.7, 27.1 | 64 | 83 |

REGISTERED CIVIL ENGINEER 2-28-14 DATE

4-28-14
PLANS APPROVAL DATE

REGISTERED PROFESSIONAL ENGINEER Keith Stillmunkes No. 68878 Exp. 9-30-15 CIVIL STATE OF CALIFORNIA

*The State of California or its officers or agents shall not be responsible for the accuracy or completeness of scanned copies of this plan sheet.*

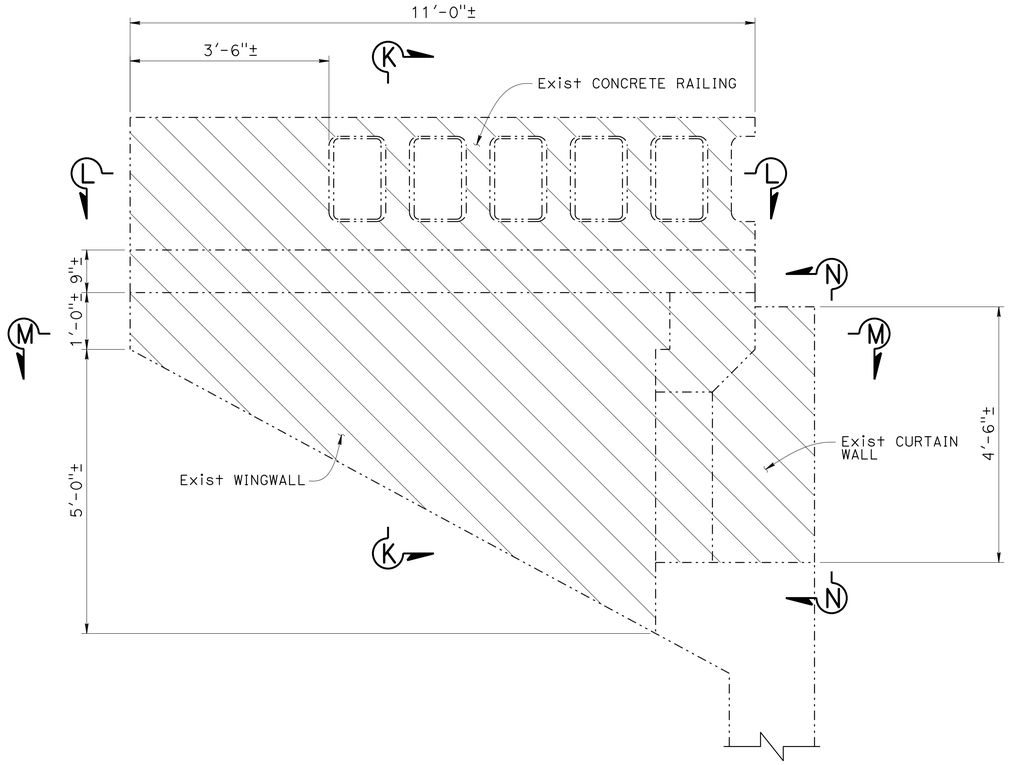


## ELEVATION - EXISTING WINGWALL, CONCRETE RAILING, AND CURTAIN WALL

3/4" = 1'-0"

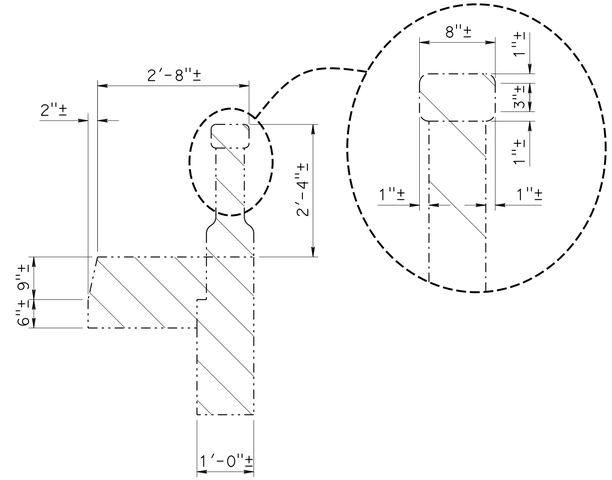


## SECTION K-K

3/4" = 1'-0"

NOTES:

1. Abutment 1 right wingwall, curtain wall, and concrete railing shown, Abutment 1 left wingwall, curtain wall, and concrete railing similar.

LEGEND:

Indicates partial concrete removal

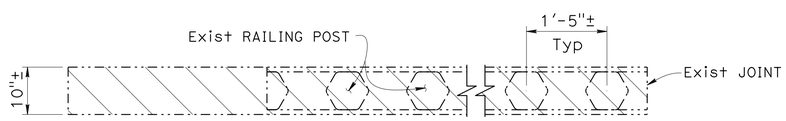


## SECTION L-L

3/4" = 1'-0"

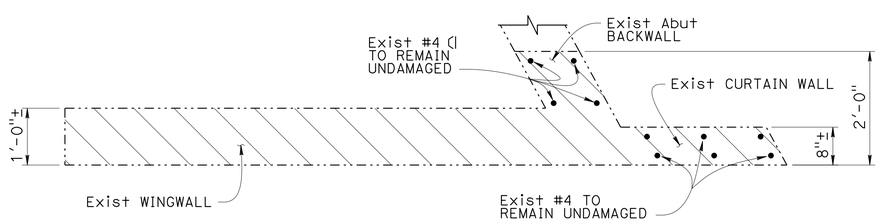


## SECTION M-M

3/4" = 1'-0"

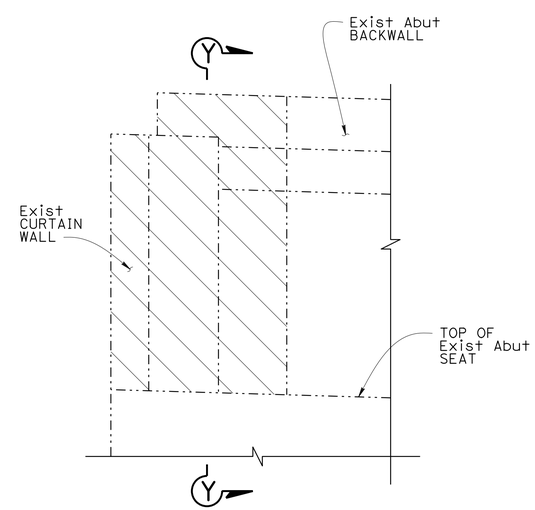


## VIEW N-N

3/4" = 1'-0"

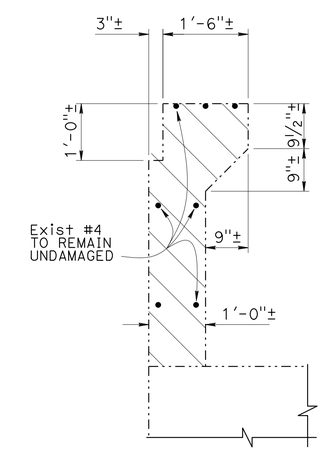


## SECTION Y-Y

3/4" = 1'-0"

NOTE:
THE CONTRACTOR SHALL VERIFY ALL CONTROLLING FIELD DIMENSIONS BEFORE ORDERING OR FABRICATING ANY MATERIAL.

| | BY | CHECKED |
|---|---|---|
| DESIGN | Manode Kodsuntie | Keith Stillmunkes |
| DETAILS | J. Yang \ Y. Feng | Keith Stillmunkes |
| QUANTITIES | Tracy Sanderson | Jon Szabo |

STATE OF CALIFORNIA
DEPARTMENT OF TRANSPORTATION

DIVISION OF ENGINEERING SERVICES
STRUCTURE DESIGN
DESIGN BRANCH 7

BRIDGE NO. 12-0137
POST MILE 26.99

# CHEROKEE OH (REHAB & RETROFIT)
## WINGWALL DETAILS NO. 1

STRUCTURES DESIGN DETAIL SHEET (ENGLISH) (REV. 09-01-10)

ORIGINAL SCALE IN INCHES FOR REDUCED PLANS 0 1 2 3

UNIT: 3592
PROJECT NUMBER & PHASE: 0300000474 1 CONTRACT NO.: 03-3E1201

DISREGARD PRINTS BEARING EARLIER REVISION DATES

REVISION DATES 10-22-13 11-21-13 11-26-13 1-15-14

SHEET 8 OF 16

FILE => 12-0137-f-wwdet01_f-wingwall(existing)-sheet.dgn

USERNAME => s119538 DATE PLOTTED => 06-MAY-2014 TIME PLOTTED => 09:27

| DIST | COUNTY | ROUTE | POST MILES TOTAL PROJECT | SHEET No. | TOTAL SHEETS |
|---|---|---|---|---|---|
| 03 | But | 70 | 26.7, 27.1 | 65 | 83 |

REGISTERED CIVIL ENGINEER 2-28-14 DATE

4-28-14
PLANS APPROVAL DATE

REGISTERED PROFESSIONAL ENGINEER Keith Stillmunkes No. 68878 Exp. 9-30-15 CIVIL STATE OF CALIFORNIA

*The State of California or its officers or agents shall not be responsible for the accuracy or completeness of scanned copies of this plan sheet.*

NOTES:

1. Abutment 1 right Wingwall and Curtain Wall shown, Abutment 1 left Wingwall and Curtain wall similar.
2. Bottom of paving notch to line up with bottom of paving notch in existing abutment backwall.
3. New top of backwall shall be even with top of existing deck.
4. Bottom of haunch to be even with bottom of existing haunch

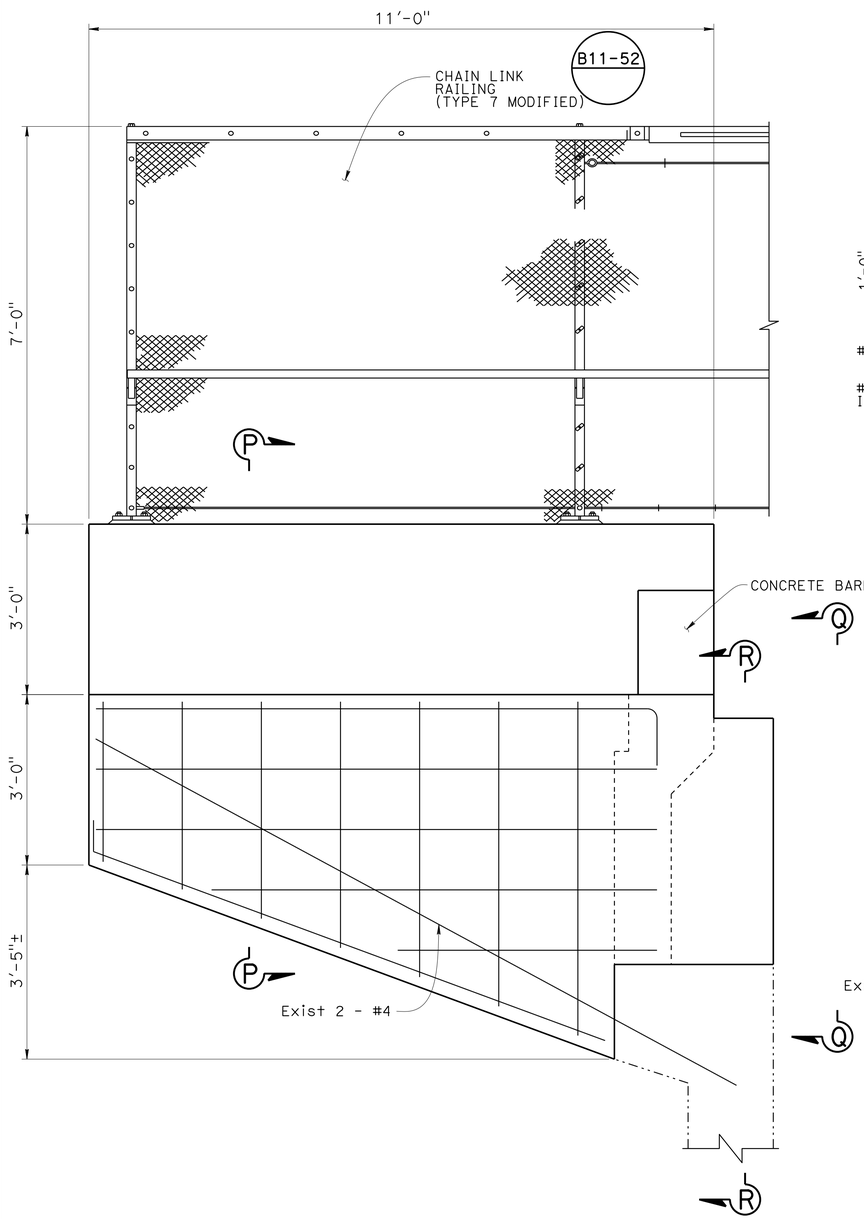


ELEVATION - NEW WINGWALL AND CURTAIN WALL
3/4" = 1'-0"

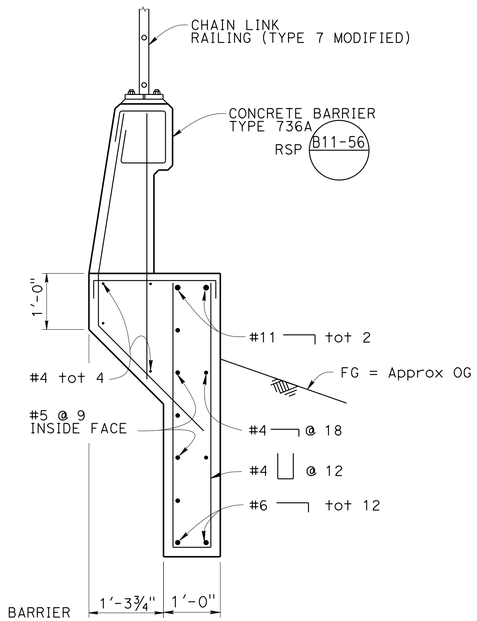


SECTION P-P
3/4" = 1'-0"

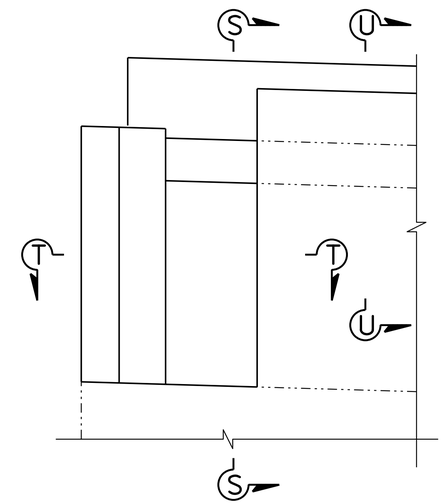


VIEW Q-Q
3/4" = 1'-0"

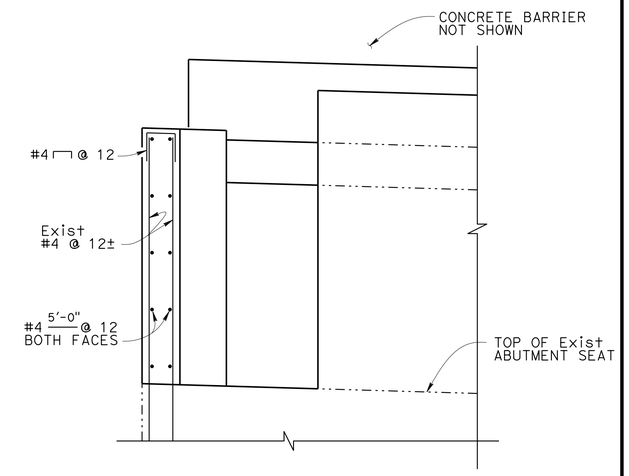


SECTION R-R
3/4" = 1'-0"

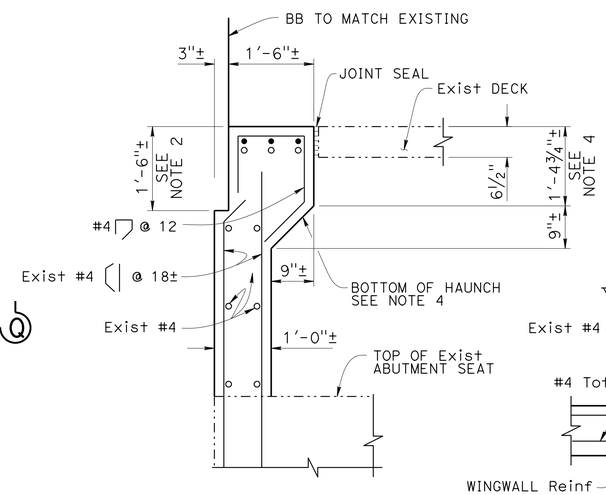


SECTION S-S
3/4" = 1'-0"

| TEMPORARY DECK PLATE LOAD CRITERIA TABLE | | |
|---|---|---|
| MOMENT DEMAND/FOOT (kips-ft/ft) | BOLT SHEAR/FOOT (kips/ft) | BOLT TENSION (kips) |
| 4.50 | 8.0 | 5.0 |

Plate deflection shall not exceed s/300 (s = span of plate).
Maximum anchor bolt spacing = 0'-9"
Plate thickness shall be ≥ 7/8"

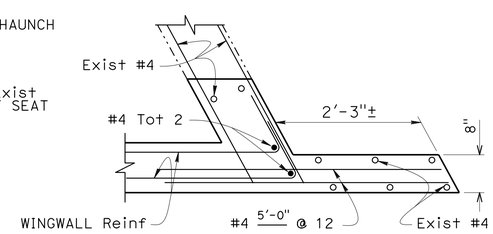


SECTION T-T
3/4" = 1'-0"

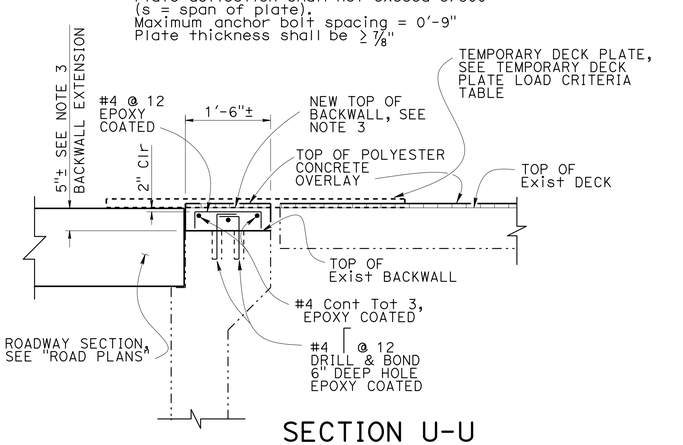


SECTION U-U
3/4" = 1'-0"

NOTE:
THE CONTRACTOR SHALL VERIFY ALL CONTROLLING FIELD DIMENSIONS BEFORE ORDERING OR FABRICATING ANY MATERIAL.

| | BY | CHECKED |
|---|---|---|
| DESIGN | Manode Kodsuntie | Keith Stillmunkes |
| DETAILS | J. Yang \ Y. Feng | Keith Stillmunkes |
| QUANTITIES | Tracy Sanderson | Jon Szabo |

STATE OF CALIFORNIA
DEPARTMENT OF TRANSPORTATION

DIVISION OF ENGINEERING SERVICES
STRUCTURE DESIGN
DESIGN BRANCH 7

BRIDGE NO. 12-0137
POST MILE 26.99

# CHEROKEE OH (REHAB & RETROFIT)
## WINGWALL DETAILS NO. 2

STRUCTURES DESIGN DETAIL SHEET (ENGLISH) (REV. 09-01-10)

ORIGINAL SCALE IN INCHES FOR REDUCED PLANS 0 1 2 3

UNIT: 3592
PROJECT NUMBER & PHASE: 0300000474 1
CONTRACT NO.: 03-3E1201

DISREGARD PRINTS BEARING EARLIER REVISION DATES

REVISION DATES: 10-22-13 11-21-13 11-26-13 1-15-14

SHEET 9 OF 16

FILE => 12-0137-f-wwdet02_g-wingwall(new)-sheet.dgn

USERNAME => s179538 DATE PLOTTED => 06-MAY-2014 TIME PLOTTED => 09:27

| DIST | COUNTY | ROUTE | POST MILES TOTAL PROJECT | SHEET No. | TOTAL SHEETS |
|---|---|---|---|---|---|
| 03 | But | 70 | 26.7, 27.1 | 66 | 83 |

REGISTERED CIVIL ENGINEER 2-28-14 DATE

4-28-14
PLANS APPROVAL DATE

REGISTERED PROFESSIONAL ENGINEER Keith Stillmunkes No. 68878 Exp. 9-30-15 CIVIL STATE OF CALIFORNIA

*The State of California or its officers or agents shall not be responsible for the accuracy or completeness of scanned copies of this plan sheet.*

LEGEND:
Structure Excavation
Structure Backfill

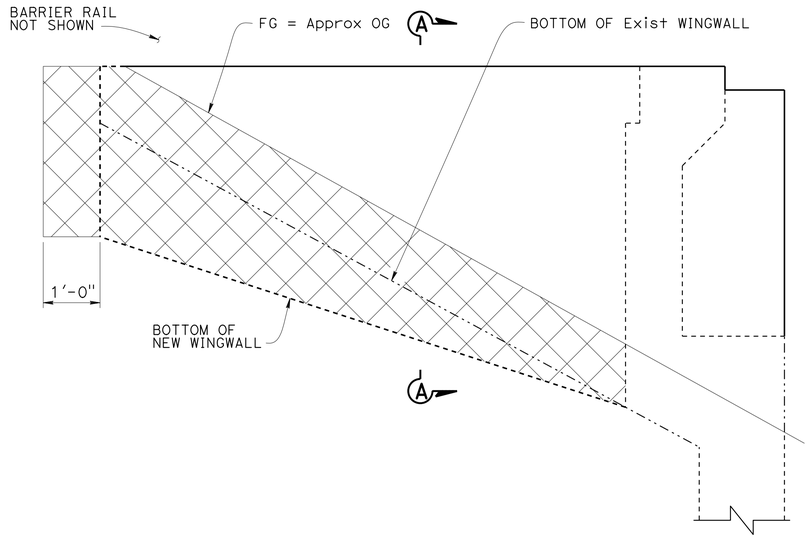


## ELEVATION - WINGWALL
3/4" = 1'-0"

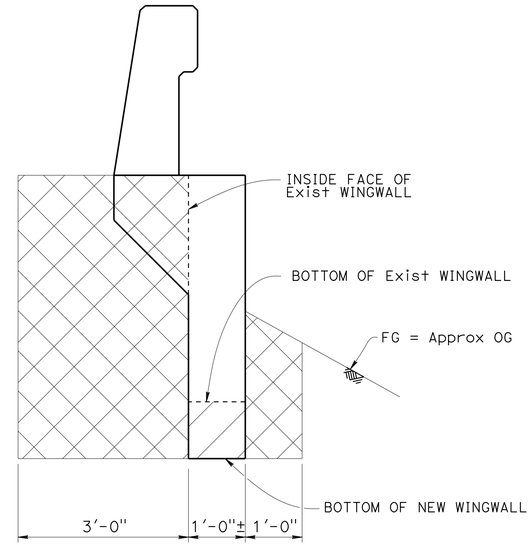


## SECTION A-A
3/4" = 1'-0"

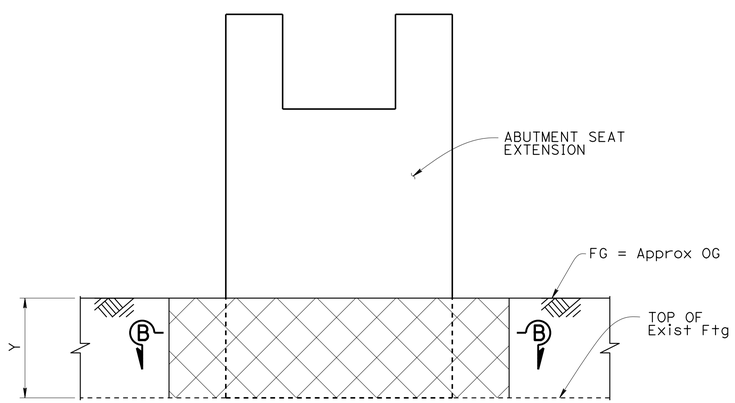


NOTE: For dimension of "Y" see "Table A" on "Abutment 1 Layout" sheet and "Table B" on "Abutment 4 Layout" sheet

## ELEVATION - ABUTMENT SEAT EXTENSION
3/4" = 1'-0"

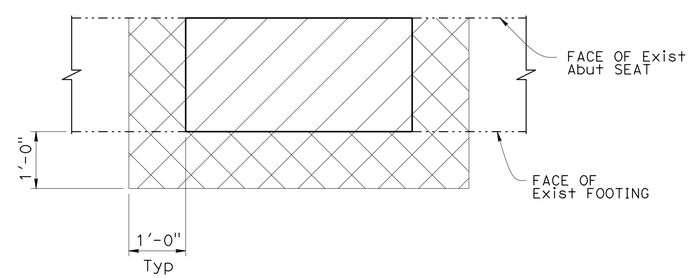


## SECTION B-B
3/4" = 1'-0"

NOTE:
THE CONTRACTOR SHALL VERIFY ALL CONTROLLING FIELD DIMENSIONS BEFORE ORDERING OR FABRICATING ANY MATERIAL.

| | BY | CHECKED |
|---|---|---|
| DESIGN | Manode Kodsuntie | Keith Stillmunkes |
| DETAILS | J. Yang \ Y. Feng | Keith Stillmunkes |
| QUANTITIES | Tracy Sanderson | Jon Szabo |

STATE OF CALIFORNIA
DEPARTMENT OF TRANSPORTATION

DIVISION OF ENGINEERING SERVICES
STRUCTURE DESIGN
DESIGN BRANCH 7

BRIDGE NO. 12-0137
POST MILE 26.99

# CHEROKEE OH (REHAB & RETROFIT)
## EXCAVATION & BACKFILL

STRUCTURES DESIGN DETAIL SHEET (ENGLISH) (REV. 09-01-10)

ORIGINAL SCALE IN INCHES FOR REDUCED PLANS 0 1 2 3

UNIT: 3592
PROJECT NUMBER & PHASE: 0300000474 1
CONTRACT NO.: 03-3E1201

DISREGARD PRINTS BEARING EARLIER REVISION DATES

REVISION DATES 10-22-13 11-21-13 11-26-13 1-15-14

SHEET 10 OF 16

FILE => 12-0137-g-exfill_h-excavation and backfill-sheet.dgn

USERNAME => s113538 DATE PLOTTED => 06-MAY-2014 TIME PLOTTED => 09:27

| DIST | COUNTY | ROUTE | POST MILES TOTAL PROJECT | SHEET No. | TOTAL SHEETS |
|---|---|---|---|---|---|
| 03 | But | 70 | 26.7, 27.1 | 67 | 83 |

REGISTERED CIVIL ENGINEER 2-28-14 DATE

4-28-14
PLANS APPROVAL DATE

REGISTERED PROFESSIONAL ENGINEER Keith Stillmunkes No. 68878 Exp. 9-30-15 CIVIL STATE OF CALIFORNIA

*The State of California or its officers or agents shall not be responsible for the accuracy or completeness of scanned copies of this plan sheet.*

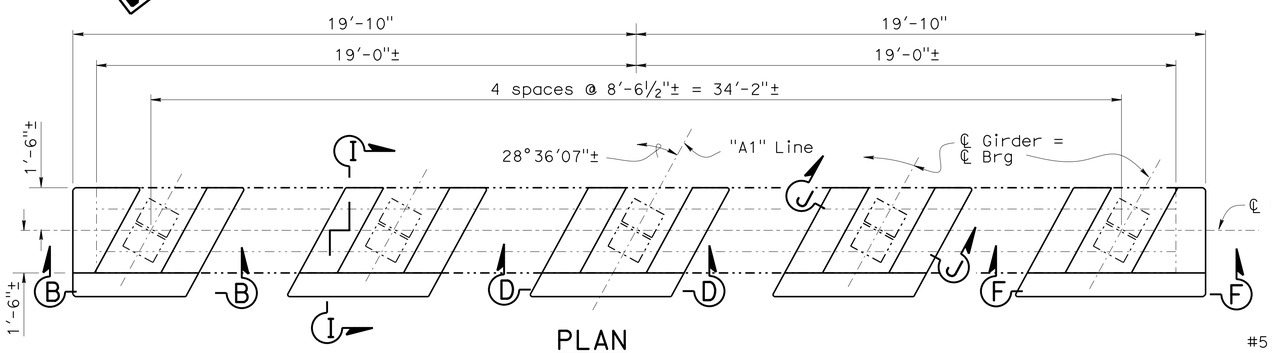


## PLAN
3/8" = 1'-0"

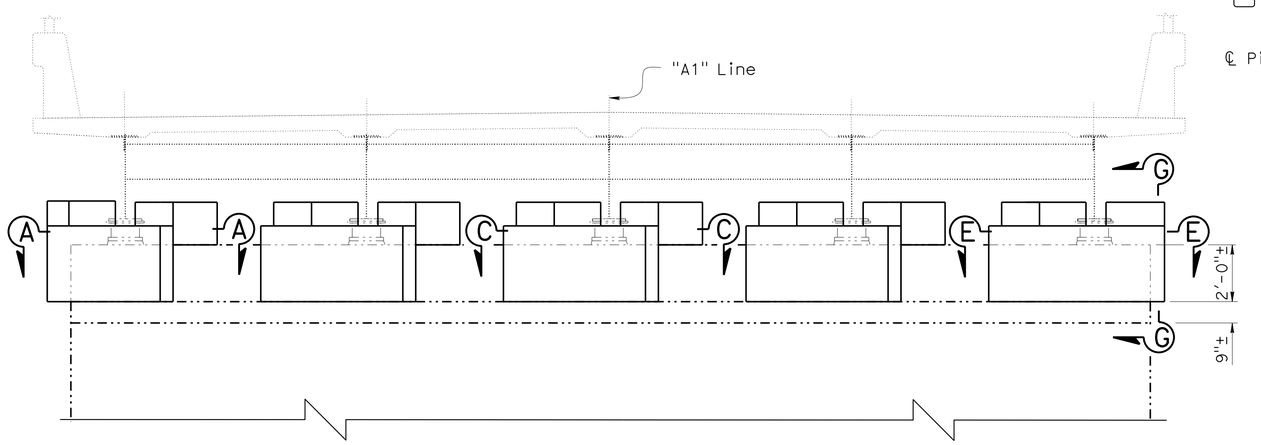


Note:
Pier 2 shown, Pier 3 similar

## ELEVATION
3/8" = 1'-0"

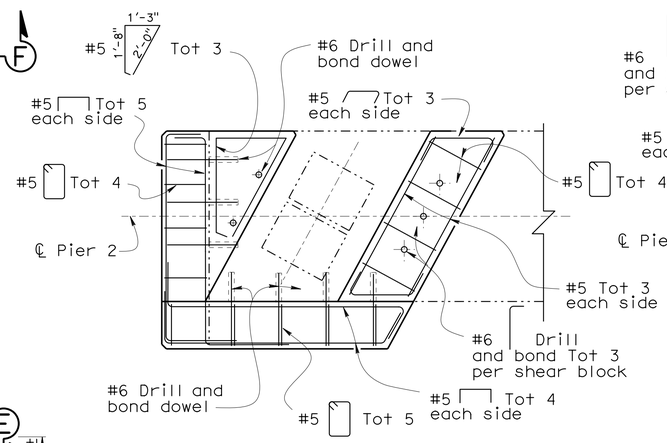


## SECTION A-A
3/4"=1'-0"

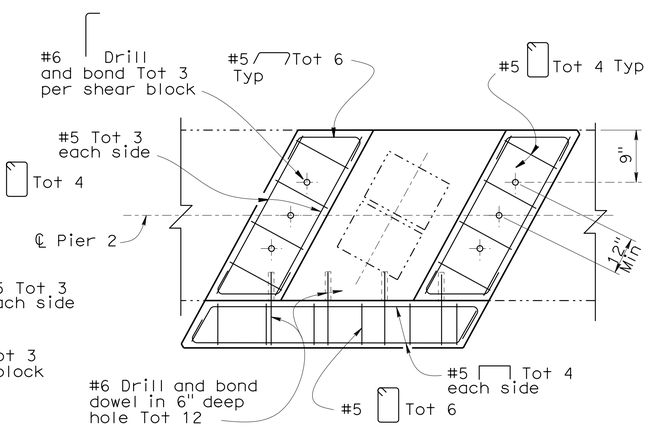


## SECTION C-C
3/4"=1'-0"

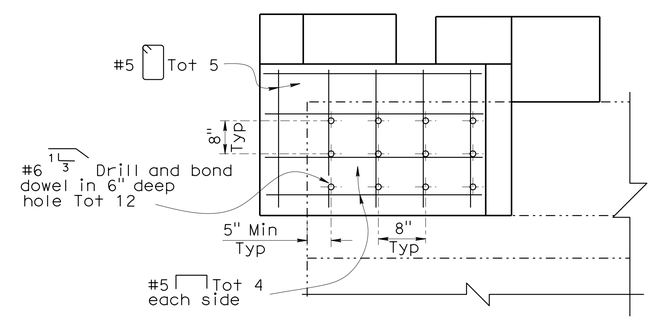


## SECTION B-B
3/4"=1'-0"

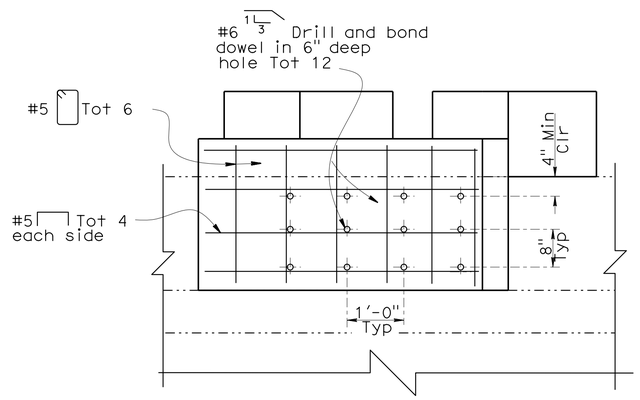


## SECTION D-D
3/4"=1'-0"

Notes:

For sections not shown, see "PIER DETAILS NO. 1" sheet.

NOTE:
THE CONTRACTOR SHALL VERIFY ALL CONTROLLING FIELD DIMENSIONS BEFORE ORDERING OR FABRICATING ANY MATERIAL.

| | BY | CHECKED |
|---|---|---|
| DESIGN | Mario Guadamuz | Keith Stillmunkes |
| DETAILS | Bruno Jenko | Keith Stillmunkes |
| QUANTITIES | Tracy Sanderson | Jon Szabo |

STATE OF CALIFORNIA
DEPARTMENT OF TRANSPORTATION

DIVISION OF ENGINEERING SERVICES
STRUCTURE DESIGN
DESIGN BRANCH 7

BRIDGE NO. 12-0137
POST MILE 26.99

# CHEROKEE OH (REHAB & RETROFIT)
## PIER LAYOUT

STRUCTURES DESIGN DETAIL SHEET (ENGLISH) (REV. 09-01-10)

ORIGINAL SCALE IN INCHES FOR REDUCED PLANS 0 1 2 3

UNIT: 3592
PROJECT NUMBER & PHASE: 0300000474 1
CONTRACT NO.: 03-3E1201

DISREGARD PRINTS BEARING EARLIER REVISION DATES

REVISION DATES 11-5-13

SHEET 11 OF 16

FILE => 12-0137-h-p_1001.dgn

USERNAME => s179538 DATE PLOTTED => 06-MAY-2014 TIME PLOTTED => 09:27

| DIST | COUNTY | ROUTE | POST MILES TOTAL PROJECT | SHEET No. | TOTAL SHEETS |
|---|---|---|---|---|---|
| 03 | But | 70 | 26.7, 27.1 | 68 | 83 |

REGISTERED CIVIL ENGINEER 2-28-14 DATE

4-28-14
PLANS APPROVAL DATE

REGISTERED PROFESSIONAL ENGINEER Keith Stillmunkes No. 68878 Exp. 9-30-15 CIVIL STATE OF CALIFORNIA

*The State of California or its officers or agents shall not be responsible for the accuracy or completeness of scanned copies of this plan sheet.*

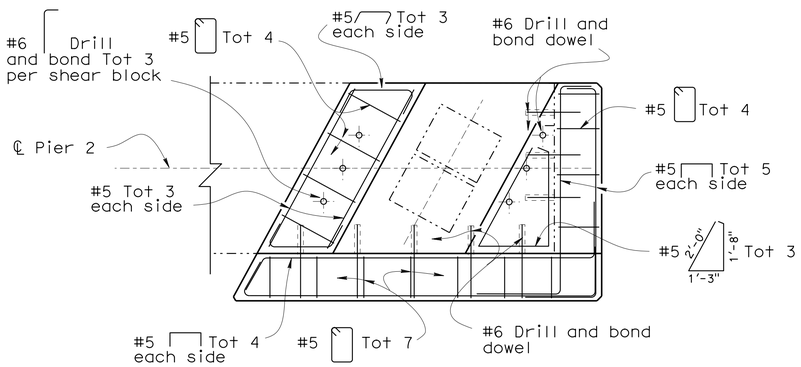


## SECTION E-E
3/4"=1'-0"

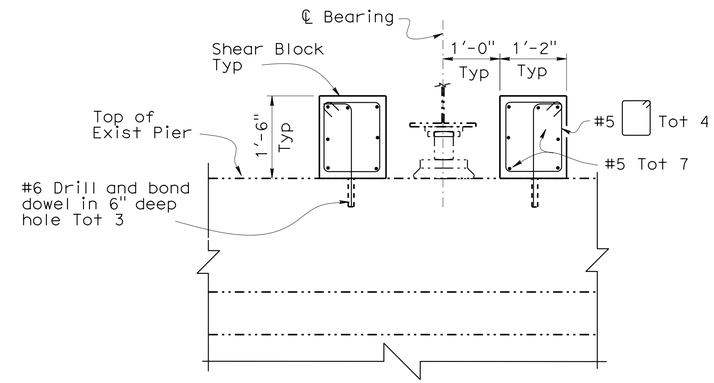


## SECTION J-J
3/4"=1'-0"

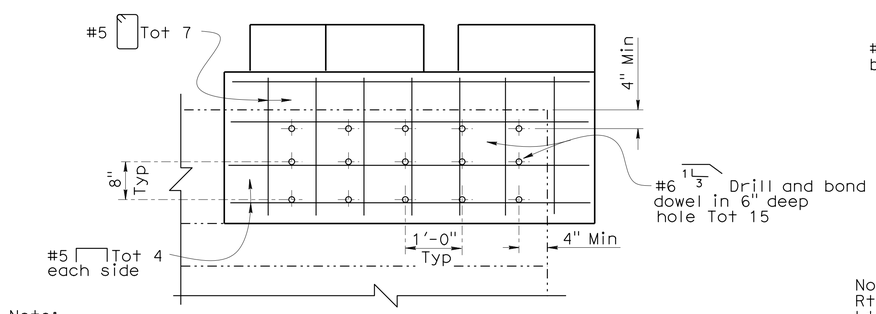


Note:
For details not shown, see "SECTION B-B"

## SECTION F-F
3/4"=1'-0"

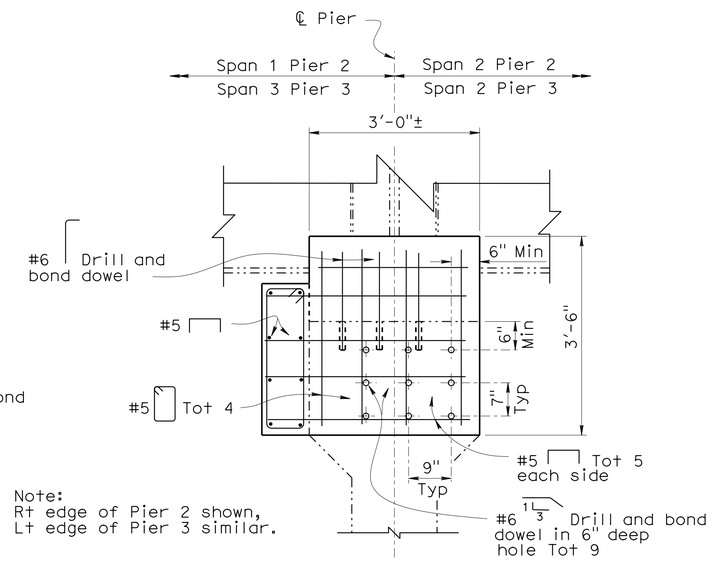


Note:
Rt edge of Pier 2 shown,
Lt edge of Pier 3 similar.

## SECTION G-G
3/4"=1'-0"

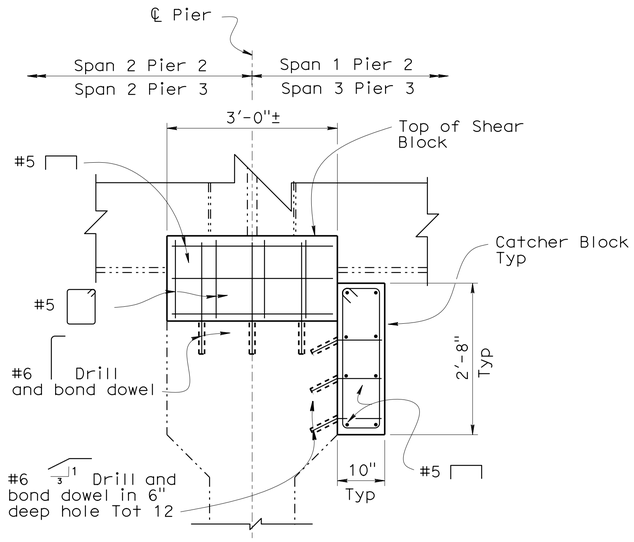


## SECTION I-I
3/4"=1'-0"

NOTE:
THE CONTRACTOR SHALL VERIFY ALL CONTROLLING FIELD DIMENSIONS BEFORE ORDERING OR FABRICATING ANY MATERIAL.

| | BY | CHECKED |
|---|---|---|
| DESIGN | Mario Guadamuz | Keith Stillmunkes |
| DETAILS | Bruno Jenko | Keith Stillmunkes |
| QUANTITIES | Tracy Sanderson | Jon Szabo |

STATE OF CALIFORNIA
DEPARTMENT OF TRANSPORTATION

DIVISION OF ENGINEERING SERVICES
STRUCTURE DESIGN
DESIGN BRANCH 7

BRIDGE NO. 12-0137
POST MILE 26.99

# CHEROKEE OH (REHAB & RETROFIT)
## PIER DETAILS NO. 1

STRUCTURES DESIGN DETAIL SHEET (ENGLISH) (REV. 09-01-10)

ORIGINAL SCALE IN INCHES FOR REDUCED PLANS 0 1 2 3

UNIT: 3592
PROJECT NUMBER & PHASE: 0300000474 1
CONTRACT NO.: 03-3E1201

DISREGARD PRINTS BEARING EARLIER REVISION DATES

REVISION DATES 11-5-13

SHEET 12 OF 16

FILE => 12-0137-1-p01dt01.dgn

USERNAME => s119358 DATE PLOTTED => 06-MAY-2014 TIME PLOTTED => 09:27

| DIST | COUNTY | ROUTE | POST MILES TOTAL PROJECT | SHEET No. | TOTAL SHEETS |
|---|---|---|---|---|---|
| 03 | But | 70 | 26.7, 27.1 | 69 | 83 |

REGISTERED CIVIL ENGINEER 2-28-14 DATE

4-28-14
PLANS APPROVAL DATE

REGISTERED PROFESSIONAL ENGINEER
Keith Stillmunkes
No. 68878
Exp. 9-30-15
CIVIL
STATE OF CALIFORNIA

*The State of California or its officers or agents shall not be responsible for the accuracy or completeness of scanned copies of this plan sheet.*

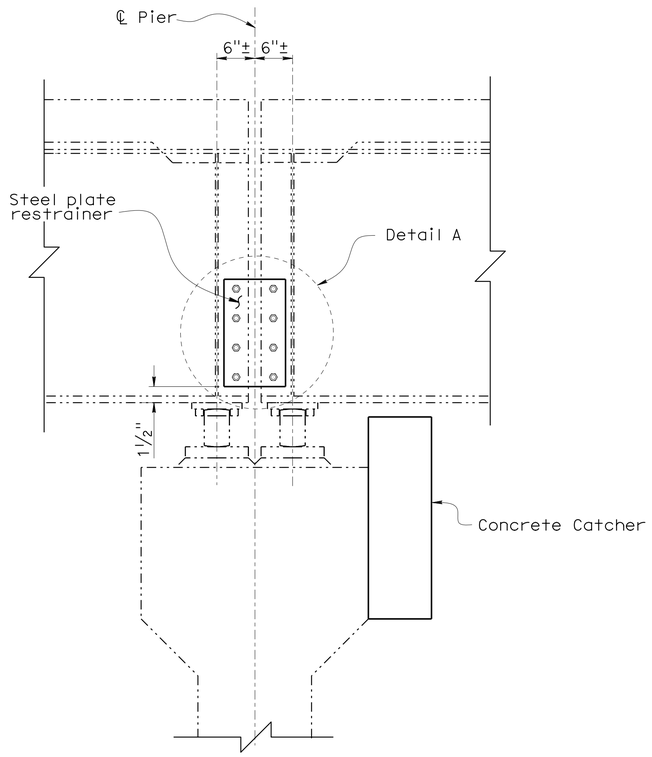


## TYPICAL PIER SECTION

⅜"=1'-0"

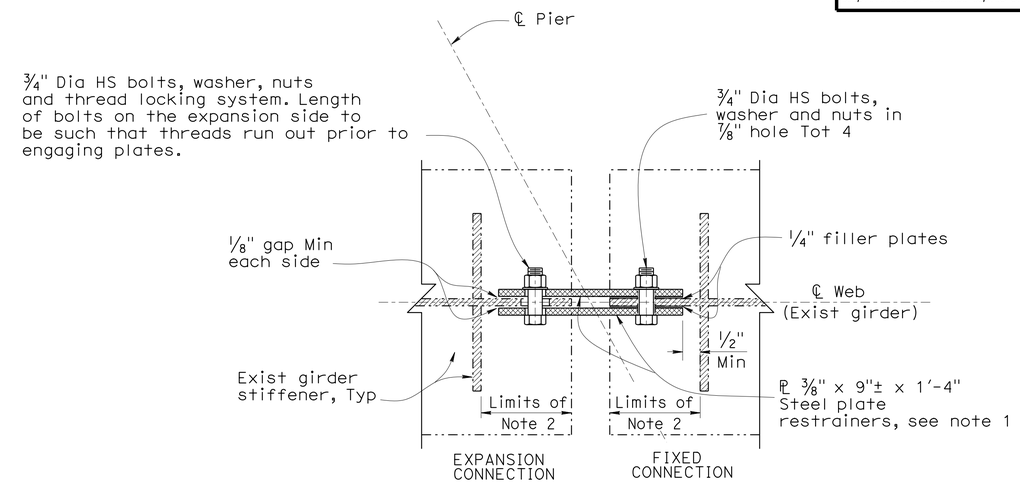


## SECTION A-A

3"=1'-0"

Note:
End diaphragms not shown

Notes:

1. Clean and paint structural steel on all surfaces of plate steel restrainer.
2. Clean existing structural steel, both sides of existing girder.
3. Pier 2 shown, Pier 3 similar.

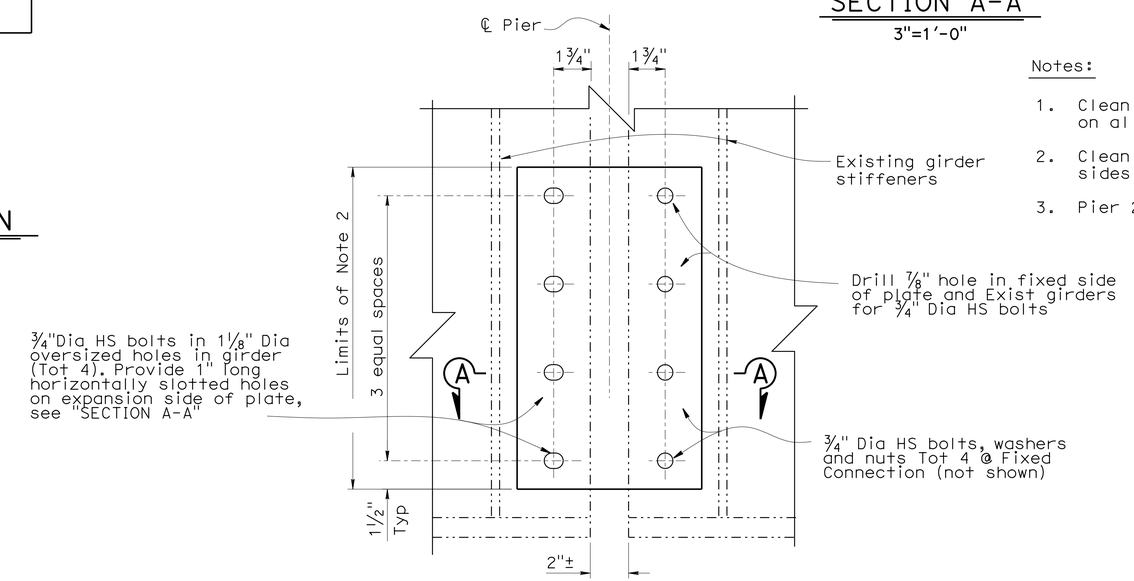


## DETAIL A

3"=1'-0"

NOTE:
THE CONTRACTOR SHALL VERIFY ALL CONTROLLING FIELD DIMENSIONS BEFORE ORDERING OR FABRICATING ANY MATERIAL.

| | BY | CHECKED |
|---|---|---|
| DESIGN | Mario Guadamuz | Keith Stillmunkes |
| DETAILS | Bruno Jenko | Keith Stillmunkes |
| QUANTITIES | Tracy Sanderson | Jon Szabo |

STATE OF CALIFORNIA
DEPARTMENT OF TRANSPORTATION

DIVISION OF ENGINEERING SERVICES
STRUCTURE DESIGN
DESIGN BRANCH 7

BRIDGE NO. 12-0137
POST MILE 26.99

# CHEROKEE OH (REHAB & RETROFIT)
## PIER DETAILS NO. 2

STRUCTURES DESIGN DETAIL SHEET (ENGLISH) (REV. 09-01-10)

ORIGINAL SCALE IN INCHES FOR REDUCED PLANS 0 1 2 3

UNIT: 3592
PROJECT NUMBER & PHASE: 0300000474 1
CONTRACT NO.: 03-3E1201

DISREGARD PRINTS BEARING EARLIER REVISION DATES

REVISION DATES 10-22-13

SHEET 13 OF 16

FILE => 12-0137-i-p01dt02.dgn

USERNAME => s119538 DATE PLOTTED => 06-MAY-2014 TIME PLOTTED => 09:27

| DIST | COUNTY | ROUTE | POST MILES TOTAL PROJECT | SHEET No. | TOTAL SHEETS |
|---|---|---|---|---|---|
| 03 | But | 70 | 26.7, 27.1 | 70 | 83 |

REGISTERED CIVIL ENGINEER 2-28-14 DATE

4-28-14
PLANS APPROVAL DATE

REGISTERED PROFESSIONAL ENGINEER Keith Stillmunkes No. 68878 Exp. 9-30-15 CIVIL STATE OF CALIFORNIA

*The State of California or its officers or agents shall not be responsible for the accuracy or completeness of scanned copies of this plan sheet.*

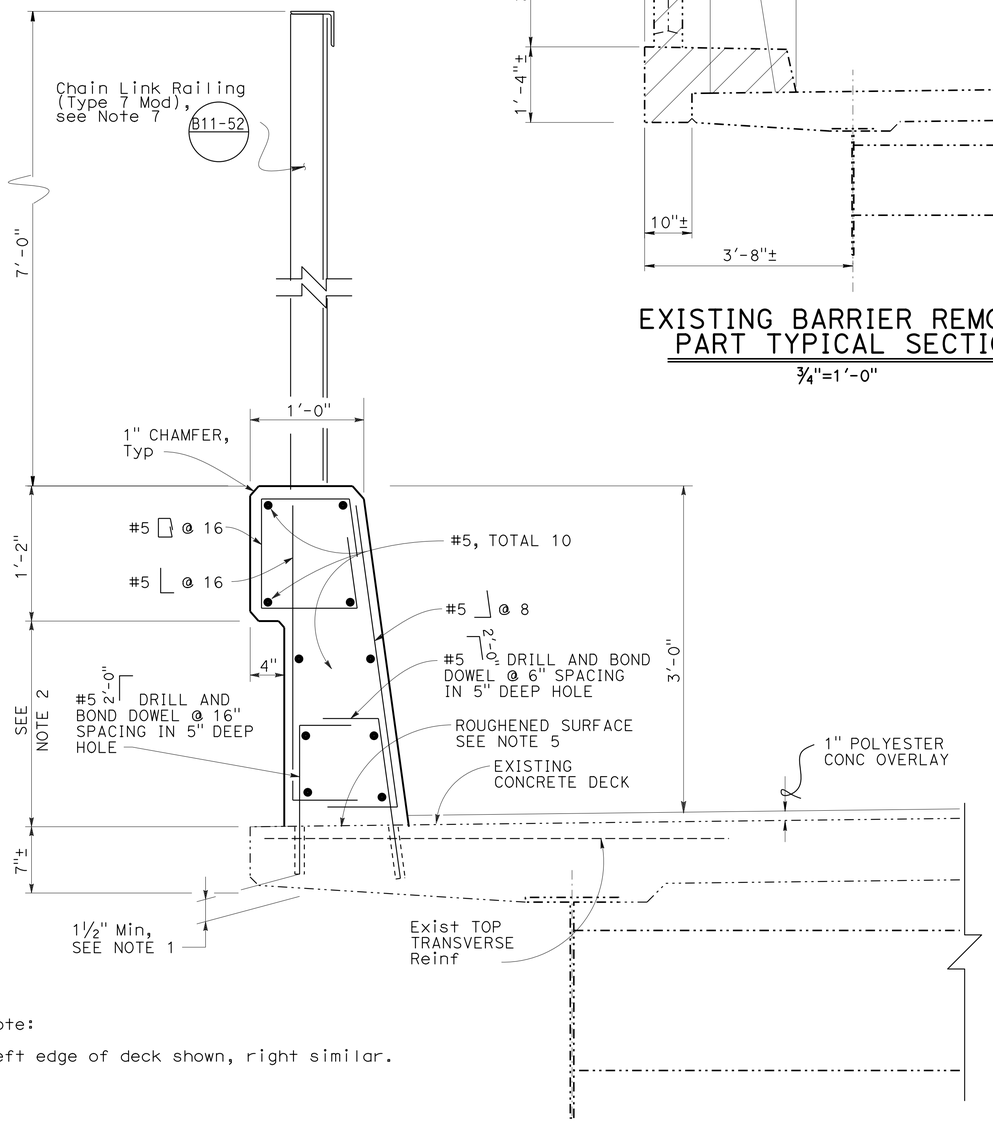


Note:

Left edge of deck shown, right similar.

## BARRIER REPLACEMENT PART TYPICAL SECTION

1½" =1'-0"

RSP B11-56

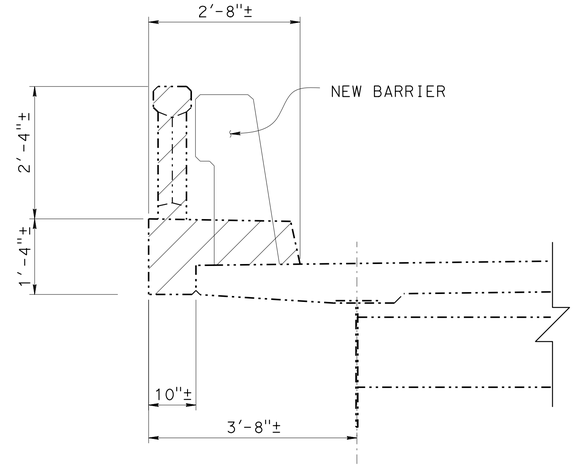


## EXISTING BARRIER REMOVAL PART TYPICAL SECTION

¾"=1'-0"

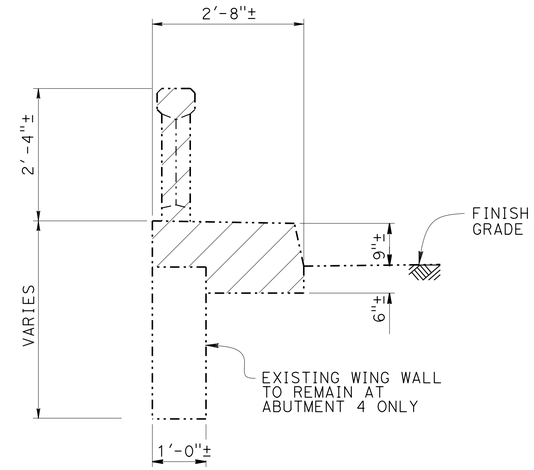


## EXISTING BARRIER REMOVAL OVER WINGWALL

¾"=1'-0"

Indicates concrete removal

Indicates existing

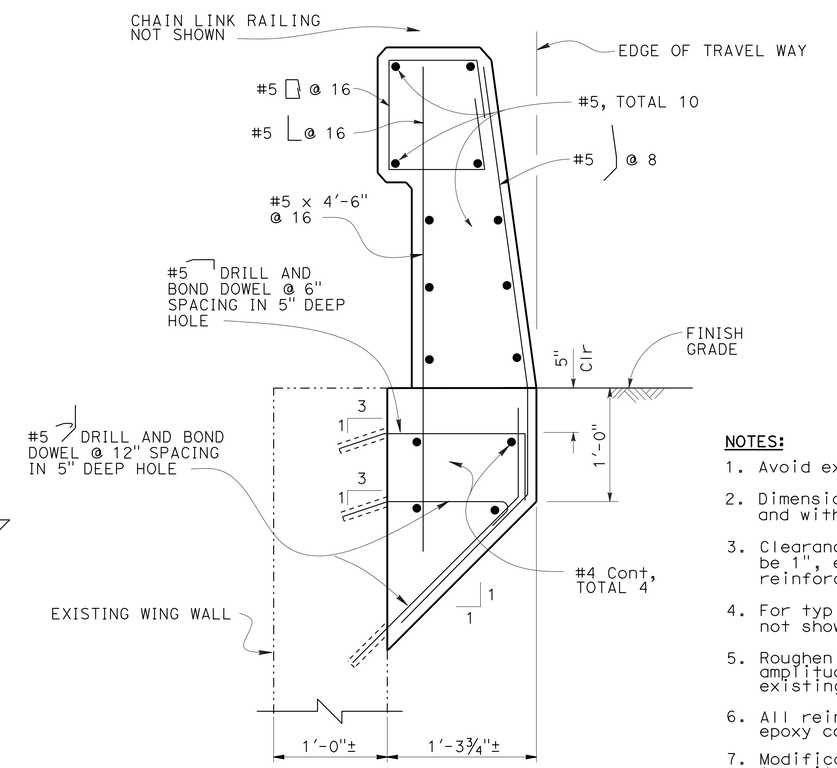


## TYPE 736A, OPTION 1

NO SCALE

RSP B11-56

NOTES:

1. Avoid existing reinforcement when drilling.
2. Dimensions may vary with roadway cross slope and with certain thickness of surfacing.
3. Clearance to reinforcing steel in barrier to be 1", except as noted. Longitudinal reinforcement to stop at all expansion joints.
4. For typical metal railing connection details not shown, see Revised Standard Plans A77U1 and A77U2.
5. Roughen existing bridge deck surface with ¼" amplitude before casting new concrete against existing concrete.
6. All reinforcement within new barrier shall be epoxy coated.
7. Modification in Chain Link Railing limited to railing height only. For other details not shown, see Standard Plan B11-52.

NOTE:
THE CONTRACTOR SHALL VERIFY ALL CONTROLLING FIELD DIMENSIONS BEFORE ORDERING OR FABRICATING ANY MATERIAL.

| | BY | CHECKED |
|---|---|---|
| DESIGN | Mario Guadamuz | Keith Stillmunkes |
| DETAILS | Bruno Jenko | Keith Stillmunkes |
| QUANTITIES | Tracy Sanderson | Jon Szabo |

STATE OF CALIFORNIA
DEPARTMENT OF TRANSPORTATION

DIVISION OF ENGINEERING SERVICES
STRUCTURE DESIGN
DESIGN BRANCH 7

BRIDGE NO. 12-0137
POST MILE 26.99

# CHEROKEE OH (REHAB & RETROFIT)
# CONCRETE BARRIER TYPE 736 MOD

STRUCTURES DESIGN DETAIL SHEET (ENGLISH) (REV. 09-01-10)

ORIGINAL SCALE IN INCHES FOR REDUCED PLANS 0 1 2 3

UNIT: 3592
PROJECT NUMBER & PHASE: 0300000474 1
CONTRACT NO.: 03-3E1201

DISREGARD PRINTS BEARING EARLIER REVISION DATES

REVISION DATES 11-6-13 1-15-14

SHEET 14 OF 16

FILE => 12-0137-j-brdt01_detail-sheet.dgn

USERNAME => s119538 DATE PLOTTED => 06-MAY-2014 TIME PLOTTED => 09:27

| DIST | COUNTY | ROUTE | POST MILES TOTAL PROJECT | SHEET No. | TOTAL SHEETS |
|---|---|---|---|---|---|
| 03 | But | 70 | 26.7, 27.1 | 71 | 83 |

REGISTERED CIVIL ENGINEER 2-28-14 DATE

4-28-14
PLANS APPROVAL DATE

REGISTERED PROFESSIONAL ENGINEER
Keith Stillmunkes
No. 68878
Exp. 9-30-15
CIVIL
STATE OF CALIFORNIA

*The State of California or its officers or agents shall not be responsible for the accuracy or completeness of scanned copies of this plan sheet.*

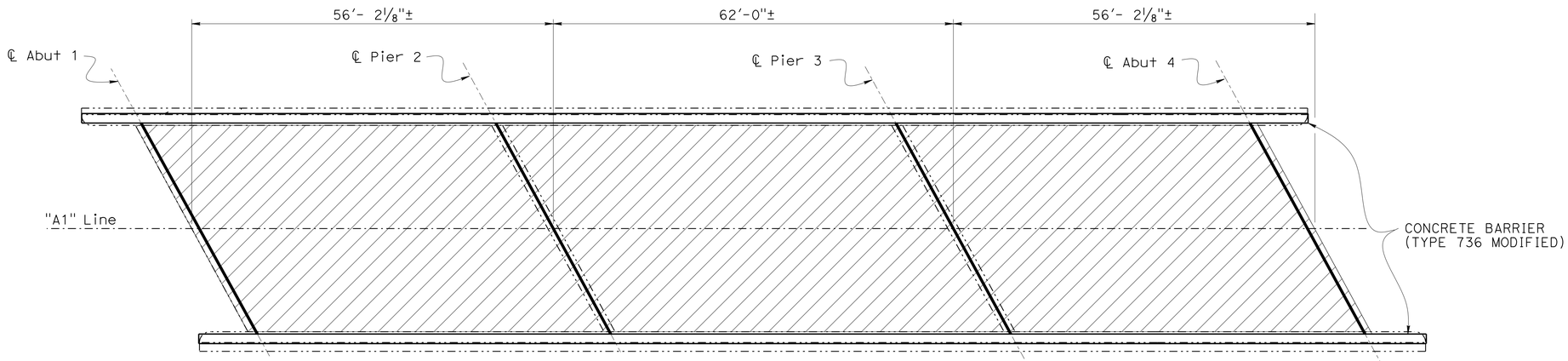


## PLAN
1" = 10'-0"

## LEGEND:

Existing Structure

Clean Expansion Joint
Install new Joint Seal

Remove 2" AC surfacing
Place 1" polyester concrete overlay

## NOTES:

1. For remove unsound concrete and place rapid setting concrete patch, see "DECK REHABILITATION DETAILS NO. 2"
2. Approximate span lengths measured along "A1" Line.

NOTE:
THE CONTRACTOR SHALL VERIFY ALL CONTROLLING FIELD DIMENSIONS BEFORE ORDERING OR FABRICATING ANY MATERIAL.

| | BY | CHECKED |
|---|---|---|
| DESIGN | Mario Guadamuz | Keith Stillmunkes |
| DETAILS | Bruno Jenko | Keith Stillmunkes |
| QUANTITIES | Tracy Sanderson | Jon Szabo |

STATE OF CALIFORNIA
DEPARTMENT OF TRANSPORTATION

DIVISION OF ENGINEERING SERVICES
STRUCTURE DESIGN
DESIGN BRANCH 7

BRIDGE NO. 12-0137
POST MILE 26.99

# CHEROKEE OH (REHAB & RETROFIT)
# DECK REHABILITATION DETAILS NO. 1

STRUCTURES DESIGN DETAIL SHEET (ENGLISH) (REV. 09-01-10)

ORIGINAL SCALE IN INCHES FOR REDUCED PLANS 0 1 2 3

UNIT: 3592
PROJECT NUMBER & PHASE: 0300000474 1
CONTRACT NO.: 03-3E1201

DISREGARD PRINTS BEARING EARLIER REVISION DATES

REVISION DATES: 10-22-13

SHEET 15 OF 16

FILE => 12-0137-j-p01dt03.dgn

USERNAME => s119538 DATE PLOTTED => 06-MAY-2014 TIME PLOTTED => 09:27

| DIST | COUNTY | ROUTE | POST MILES TOTAL PROJECT | SHEET No. | TOTAL SHEETS |
|---|---|---|---|---|---|
| 03 | But | 70 | 26.7, 27.1 | 72 | 83 |

REGISTERED CIVIL ENGINEER 2-28-14 DATE

4-28-14
PLANS APPROVAL DATE

REGISTERED PROFESSIONAL ENGINEER Keith Stillmunkes No. 68878 Exp. 9-30-15 CIVIL STATE OF CALIFORNIA

*The State of California or its officers or agents shall not be responsible for the accuracy or completeness of scanned copies of this plan sheet.*

## DECK REPAIR TABLE

Remove unsound concrete and patch with rapid setting concrete

| Bridge Name | Bridge Number | Approximate area of unsound concrete deck (percent) | Approximate depth of unsound concrete (inches) | Approximate volume of unsound concrete (cf) | Approximate volume of Rapid-set concrete patch (cf) |
|---|---|---|---|---|---|
| CHEROKEE OVERHEAD | 12-0137 | 3 | 3± | 46 | 46 |

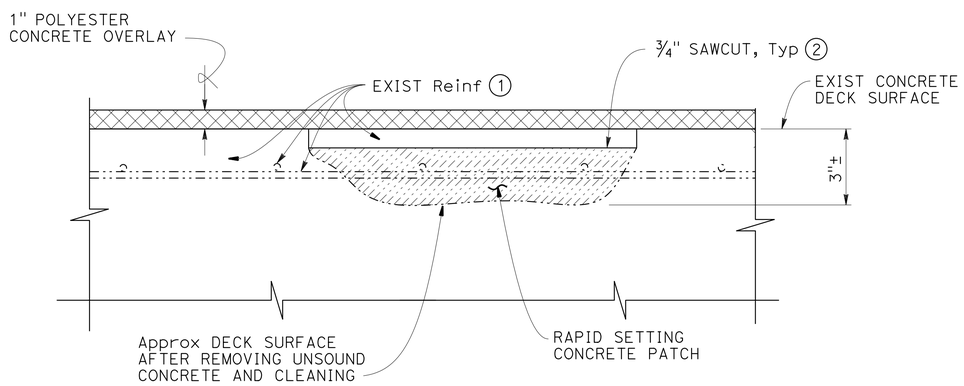


## DECK REPAIR DETAIL

NO SCALE

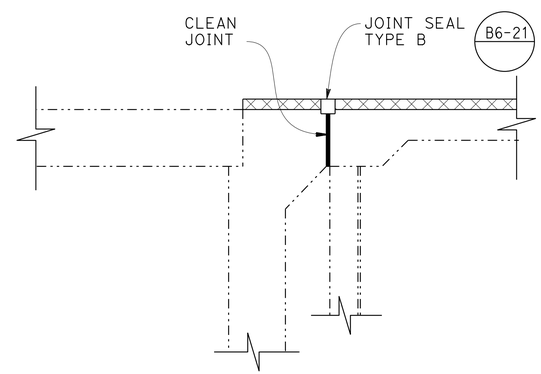


## EXISTING JOINTS AT ABUTMENTS

¾" = 1'-0"

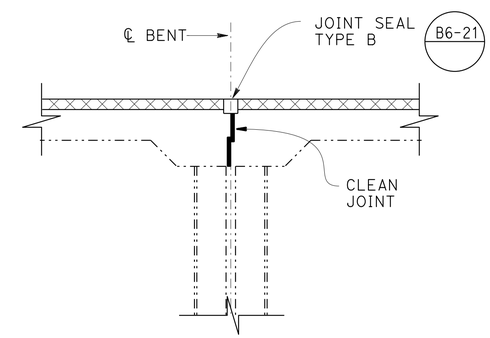


## EXISTING JOINTS AT PIERS

¾" = 1'-0"

## NOTES:

1. Reinforcement may be encountered during concrete removal and is to remain undamaged.
2. ¾" sawcut limits shall be made in rectangular shape

## LEGEND:

- Unsound concrete removal area
- 1" Polyester concrete overlay
- Existing

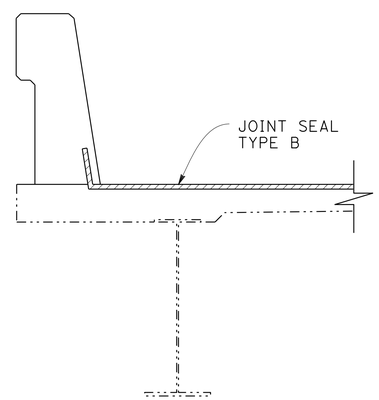


## EXISTING JOINTS AT LOW SIDE OF DECK

¾" = 1'-0"

## JOINT SEAL TABLE

| Location | Station | Approximate length | Min "MR" (in) | Approx Depth to Clean Joint (in) | Existing Water Stop |
|---|---|---|---|---|---|
| Abut 1 | 680+42.33± | 38'-3" | 1 | 12 | None |
| Pier 2 | 680+96.60± | 38'-3" | 1 | 9½ | None |
| Pier 3 | 681+58.60± | 38'-3" | 1 | 9½ | None |
| Abut 4 | 682+12.86± | 38'-3" | 1 | 12 | None |

NOTE:
THE CONTRACTOR SHALL VERIFY ALL CONTROLLING FIELD DIMENSIONS BEFORE ORDERING OR FABRICATING ANY MATERIAL.

| | BY | CHECKED |
|---|---|---|
| DESIGN | Mario Guadamuz | Keith Stillmunkes |
| DETAILS | Bruno Jenko | Keith Stillmunkes |
| QUANTITIES | Tracy Sanderson | Jon Szabo |

STATE OF CALIFORNIA
DEPARTMENT OF TRANSPORTATION

DIVISION OF ENGINEERING SERVICES
STRUCTURE DESIGN
DESIGN BRANCH 7

BRIDGE NO. 12-0137
POST MILE 26.99

# CHEROKEE OH (REHAB & RETROFIT)
# DECK REHABILITATION DETAILS NO. 2

STRUCTURES DESIGN DETAIL SHEET (ENGLISH) (REV. 09-01-10)

ORIGINAL SCALE IN INCHES FOR REDUCED PLANS 0 1 2 3

UNIT: 3592
PROJECT NUMBER & PHASE: 0300000474 1
CONTRACT NO.: 03-3E1201

DISREGARD PRINTS BEARING EARLIER REVISION DATES

REVISION DATES 10-22-13

SHEET 16 OF 16

FILE => 12-0137-j-p01dt04.dgn

USERNAME => s119538 DATE PLOTTED => 06-MAY-2014 TIME PLOTTED => 09:27

| DIST | COUNTY | ROUTE | POST MILES TOTAL PROJECT | SHEET No. | TOTAL SHEETS |
|---|---|---|---|---|---|
| 03 | But | 70 | 26.7, 27.1 | 73 | 83 |

REGISTERED CIVIL ENGINEER 2-28-14 DATE

4-28-14
PLANS APPROVAL DATE

REGISTERED PROFESSIONAL ENGINEER Keith Stillmunkes No. 68878 Exp. 9-30-15 CIVIL STATE OF CALIFORNIA

*The State of California or its officers or agents shall not be responsible for the accuracy or completeness of electronic copies of this plan sheet.*

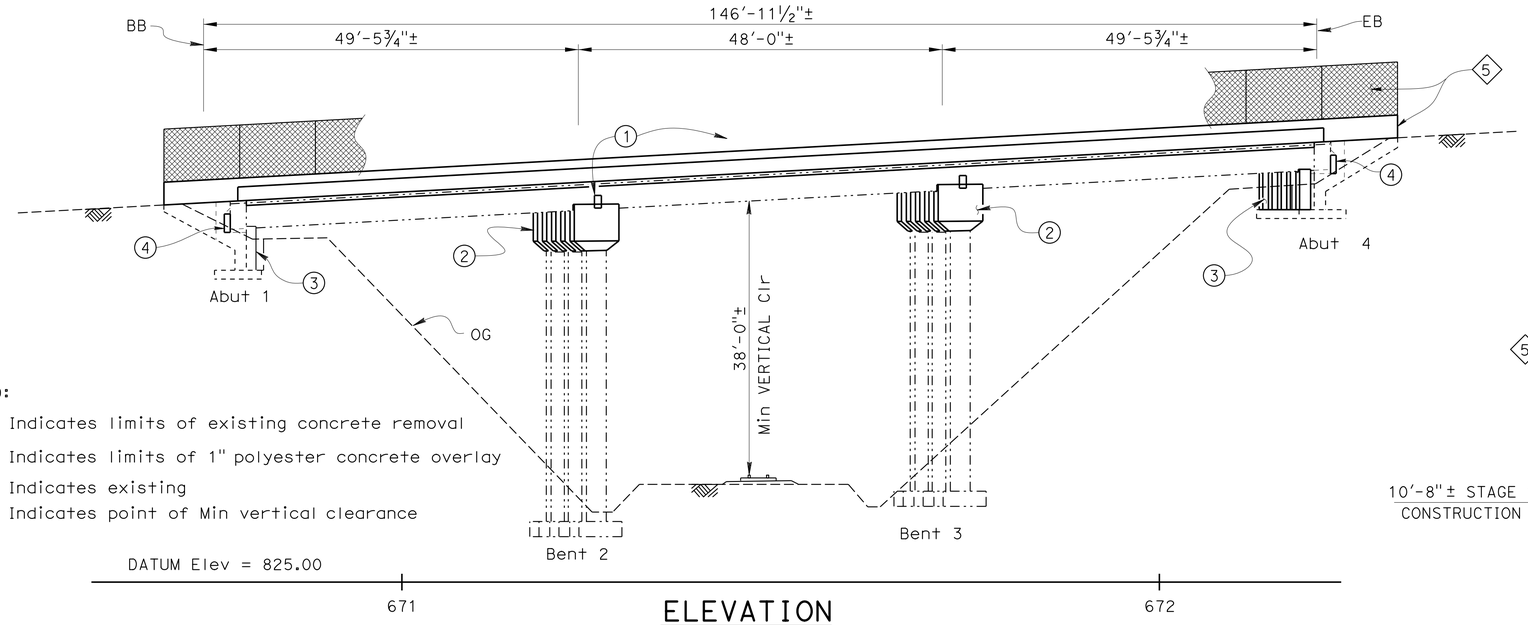


## ELEVATION
1" = 10'

LEGEND:

- Indicates limits of existing concrete removal
- Indicates limits of 1" polyester concrete overlay
- Indicates existing
- Indicates point of Min vertical clearance

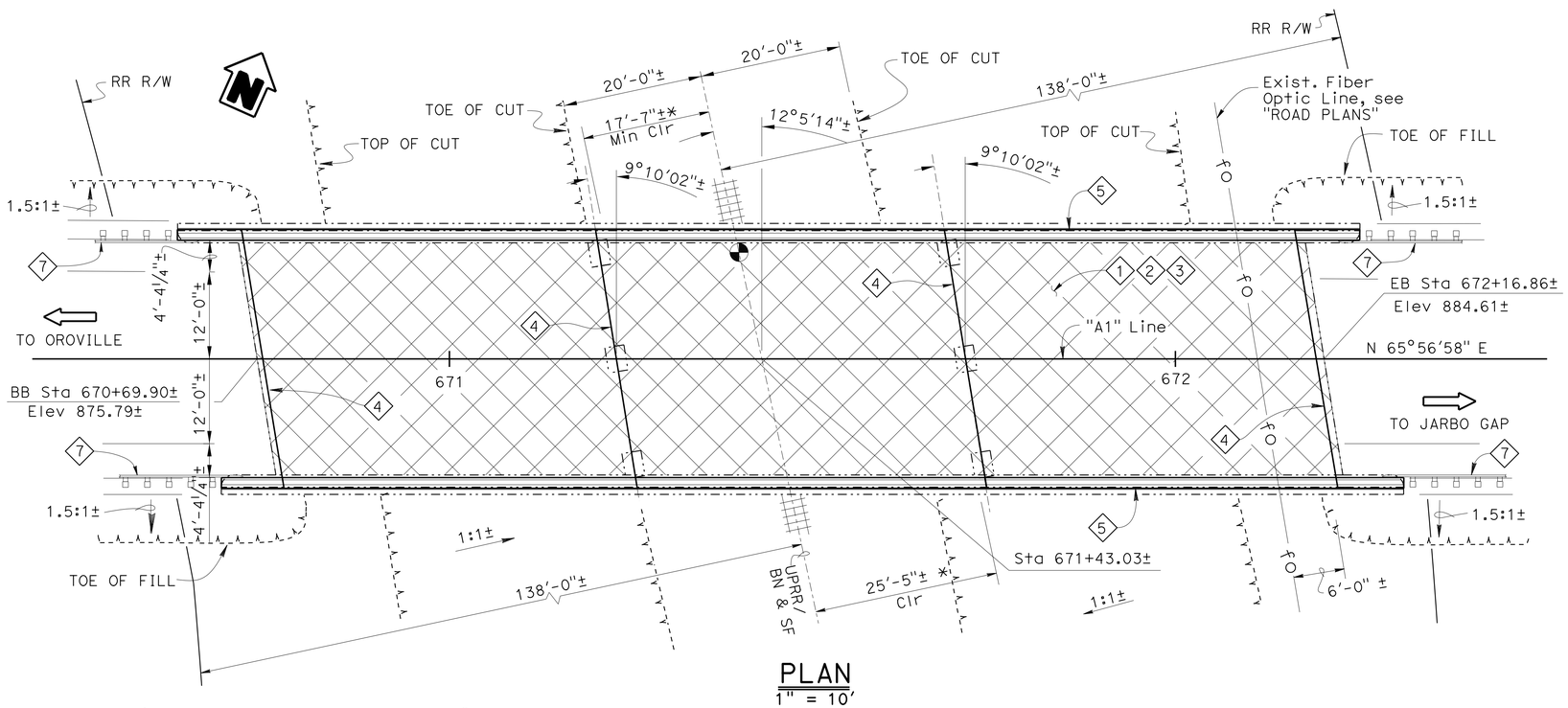


## PLAN
1" = 10'

* Horizontal clearance measured from ℄ of RR to nearest face of existing column

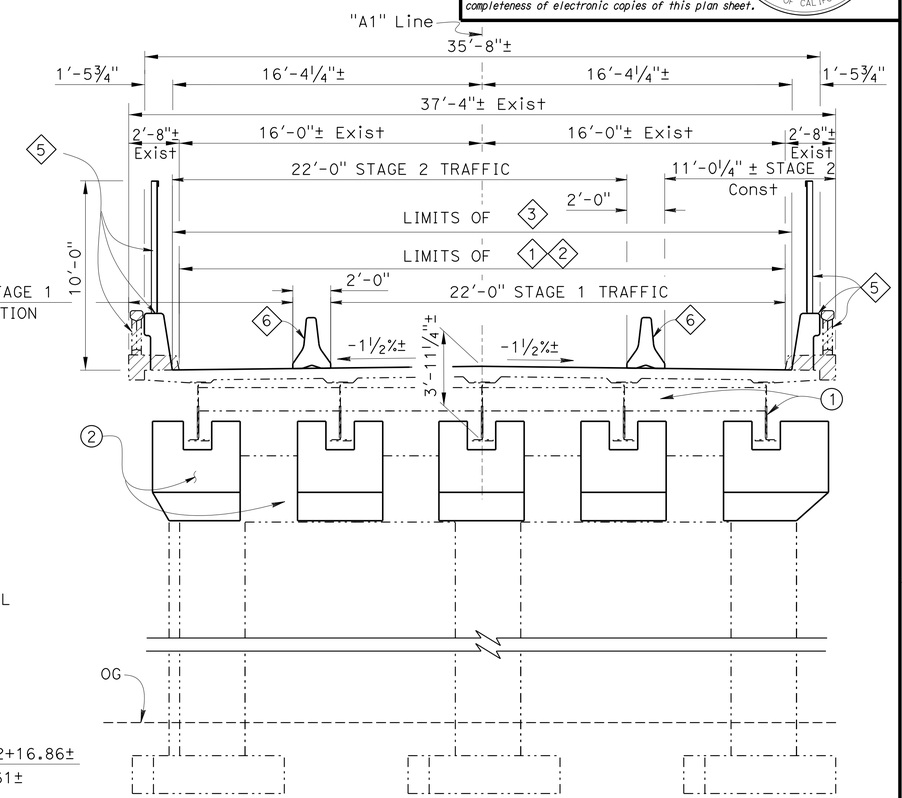


## TYPICAL SECTION
¼" = 1'-0"

◯ Indicates retrofit:

1. Steel plate restrainers, total 5 per bent.
2. Concrete bent seat extension.
3. Concrete abutment seat extension.
4. Abutment lumber blocking between girders and backwalls.

◇ Indicates rehabilitation:

1. Remove 2"± AC surfacing.
2. Remove unsound concrete (deck) and place rapid setting concrete patch.
3. Place polyester concrete overlay (1" minimum thickness).
4. Clean expansion joints and install new joint seals Type B.
5. Remove existing concrete railing and construct Concrete Barrier (Type 736 MOD) with Chain Link Railing (Type 7 Modified).
6. Temporary concrete barrier, Type K, see "Road Plans"
7. MGS, see "Road Plans"

Mike Beauchamp
DESIGN ENGINEER

| | BY | CHECKED |
|---|---|---|
| DESIGN | Keith Stillmunkes | Mario Guadamuz |
| DETAILS | Gerald Dickerson | Mario Guadamuz |
| QUANTITIES | Tracy Sanderson | Jon Szabo |

LOAD & RESISTANCE FACTOR DESIGN — LIVE LOADING: HL93 W/"LOW-BOY"; PERMIT DESIGN VEHICLE

| | BY | CHECKED |
|---|---|---|
| LAYOUT | Keith Stillmunkes | Mario Guadamuz |
| SPECIFICATIONS | Karla Meier | Karla Meier (PLANS AND SPECS COMPARED) |

ORIGINAL SCALE IN INCHES FOR REDUCED PLANS 0 1 2 3

STATE OF CALIFORNIA
DEPARTMENT OF TRANSPORTATION

DIVISION OF ENGINEERING SERVICES
STRUCTURE DESIGN
DESIGN BRANCH 7

BRIDGE NO. 12-0138
POST MILE 26.81

# PENTZ OVERHEAD (REHAB & RETROFIT)
## GENERAL PLAN

UNIT: 3592
PROJECT NUMBER & PHASE: 0300000474 1
CONTRACT NO.: 03-3E1201

DISREGARD PRINTS BEARING EARLIER REVISION DATES

REVISION DATES: 6-21-13 1-15-14 11-18-13

SHEET 1 OF 11

USERNAME => s119538 DATE PLOTTED => 06-MAY-2014 TIME PLOTTED => 09:27

STRUCTURES DESIGN GENERAL PLAN SHEET (ENGLISH) (REV.09-01-10)

FILE => 12-0138-a-gp.dgn

| DIST | COUNTY | ROUTE | POST MILES TOTAL PROJECT | SHEET No. | TOTAL SHEETS |
|---|---|---|---|---|---|
| 03 | But | 70 | 26.7, 27.1 | 74 | 83 |

REGISTERED CIVIL ENGINEER 2-28-14 DATE

4-28-14
PLANS APPROVAL DATE

REGISTERED PROFESSIONAL ENGINEER Keith Stillmunkes No. 68878 Exp. 9-30-15 CIVIL STATE OF CALIFORNIA

*The State of California or its officers or agents shall not be responsible for the accuracy or completeness of electronic copies of this plan sheet.*

# GENERAL NOTES
## LOAD AND RESISTANCE FACTOR DESIGN

QUANTITIES

| | | |
|---|---|---|
| PUBLIC SAFETY PLAN | LUMP | SUM |
| RAPID SETTING CONCRETE (PATCH) | 40 | CF |
| REMOVE ASPHALT CONCRETE SURFACING | 4,730 | SQFT |
| REMOVE UNSOUND CONCRETE | 40 | CF |
| PREPARE CONCRETE BRIDGE DECK SURFACE | 4,830 | SQFT |
| FURNISH POLYESTER CONCRETE OVERLAY | 400 | CF |
| PLACE POLYESTER CONCRETE OVERLAY | 4,830 | SQFT |
| BRIDGE REMOVAL (PORTION), LOCATION A | LUMP | SUM |
| STRUCTURE EXCAVATION (BRIDGE) | 18 | CY |
| STRUCTURE BACKFILL (BRIDGE) | 11 | CY |
| STRUCTURAL CONCRETE, BRIDGE | 44 | CY |
| DRILL AND BOND DOWEL | 365 | LF |
| CLEAN EXPANSION JOINT | 133 | LF |
| JOINT SEAL (MR 1") | 137 | LF |
| BAR REINFORCING STEEL (BRIDGE) | 10,365 | LB |
| STRUCTURAL STEEL (BRIDGE) | 1,240 | LB |
| ABUTMENT LUMBER BLOCKING | 0.24 | MFBM |
| CLEAN STRUCTURAL STEEL (EXISTING BRIDGE) | LUMP | SUM |
| CLEAN AND PAINT STRUCTURAL STEEL | LUMP | SUM |
| CHAIN LINK RAILING (TYPE 7 MODIFIED) | 323 | LF |
| CONCRETE BARRIER (TYPE 736 MODIFIED) | 326 | LF |

**DESIGN:** AASHTO LRFD Bridge Design Specifications, 4th edition and the California Amendments preface dated December 2011

**SEISMIC DESIGN:**
Caltrans Seismic Design Criteria (SDC), Version 1.7 dated April 2013

**SEISMIC LOADING:**
Acceleration Response Spectrum
Peak Bedrock Acceleration = 0.21g

**DEAD LOAD:**
Do not include allowance for future wearing surface.

**LIVE LOADING:**
HL-93 and P-15 permit design load.

**NEW REINFORCED CONCRETE:**
fy = 60 ksi
f'c = 4.0 ksi

**EXISTING REINFORCED CONCRETE:**
fy = 40 ksi
f'c = 5.0 ksi

**EXISTING STRUCTURAL STEEL:**
fy = 33 ksi

**NEW STRUCTURAL STEEL:**
fy = 36 ksi

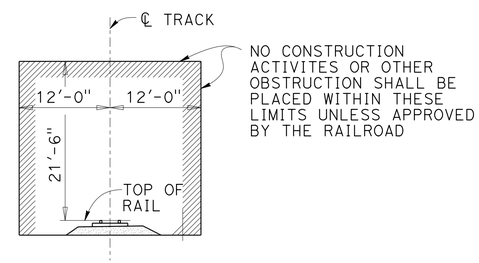


MINIMUM CONSTRUCTION CLEARANCE ENVELOPE
(Normal to railroad tracks)

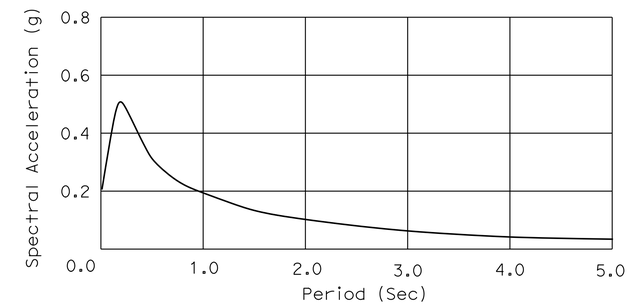


SITE SPECIFIC ACCELERATION RESPONSE SPECTRUM

## INDEX TO PLANS


| SHEET NO. | TITLE |
|---|---|
| 1. | GENERAL PLAN |
| 2. | INDEX TO PLANS |
| 3. | FOUNDATION PLAN |
| 4. | STRUCTURE LAYOUT |
| 5. | ABUTMENT LAYOUT |
| 6. | ABUTMENT DETAILS NO. 1 |
| 7. | BENT LAYOUT |
| 8. | BENT DETAILS NO. 1 |
| 9. | DECK REHABILITATION DETAILS NO. 1 |
| 10. | DECK REHABILITATION DETAILS NO. 2 |
| 11. | CONCRETE BARRIER TYPE 736 MOD |


## STANDARD PLANS DATED 2010

| | | |
|---|---|---|
| | A10A | ABBREVIATIONS (SHEET 1 OF 2) |
| RSP | A10B | ABBREVIATIONS (SHEET 2 OF 2) |
| | A10C | LINES AND SYMBOLS (SHEET 1 OF 3) |
| | A10D | LINES AND SYMBOLS (SHEET 2 OF 3) |
| | A10E | LINES AND SYMBOLS (SHEET 3 OF 3) |
| RSP | A77U1 | MIDWEST GUARDRAIL SYSTEM-CONNECTIONS TO BRIDGE RAILING WITHOUT SIDEWALK DETAILS NO. 1 |
| RSP | A77U2 | MIDWEST GUARDRAIL SYSTEM-CONNECTIONS TO BRIDGE RAILING WITHOUT SIDEWALK DETAILS NO. 2 |
| | B0-1 | BRIDGE DETAILS |
| | B0-3 | BRIDGE DETAILS |
| | B0-5 | BRIDGE DETAILS |
| | B0-13 | BRIDGE DETAILS |
| | B6-21 | JOINT SEALS (MAXIMUM MOVEMENT RATING = 2") |
| | B11-52 | CHAIN LINK RAILING TYPE 7 |
| RSP | B11-56 | CONCRETE BARRIER TYPE 736 |
| | T3A | TEMPORARY RAILING (TYPE K) |
| | T3B | TEMPORARY RAILING (TYPE K) |

STANDARD PLAN SHEET No.
DETAIL No.

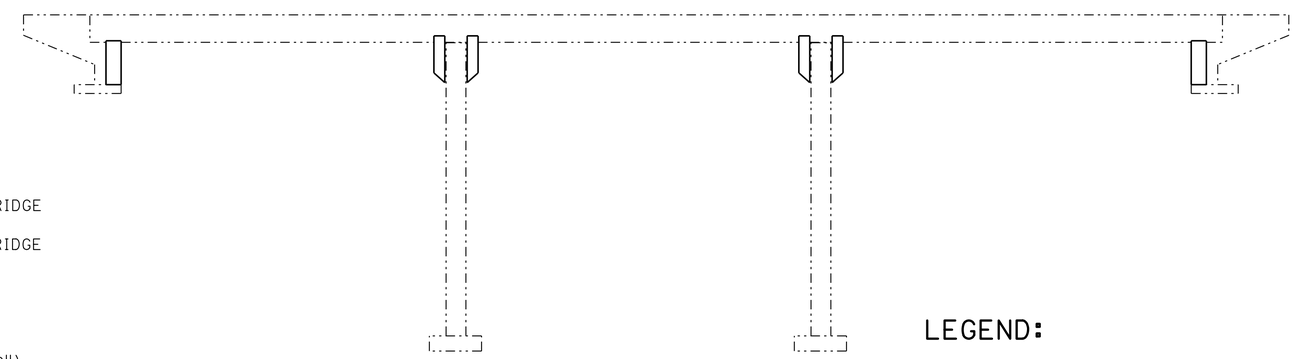

CONCRETE STRENGTH AND TYPE LIMITS
No Scale

LEGEND:
Indicates existing
Structural Concrete Bridge (4000 psi @ 28 days)

NOTE:
THE CONTRACTOR SHALL VERIFY ALL CONTROLLING FIELD DIMENSIONS BEFORE ORDERING OR FABRICATING ANY MATERIAL.

| | BY | CHECKED |
|---|---|---|
| DESIGN | Keith Stillmunkes | Mario Guadamuz |
| DETAILS | Lan T Tran | Mario Guadamuz |
| QUANTITIES | Tracy Sanderson | Jon Szabo |

STATE OF CALIFORNIA
DEPARTMENT OF TRANSPORTATION

DIVISION OF ENGINEERING SERVICES
STRUCTURE DESIGN
DESIGN BRANCH 7

BRIDGE NO. 12-0138
POST MILE 26.81

**PENTZ OVERHEAD (REHAB & RETROFIT)**
**INDEX TO PLANS**

STRUCTURES DESIGN DETAIL SHEET (ENGLISH) (REV. 09-01-10)

ORIGINAL SCALE IN INCHES FOR REDUCED PLANS 0 1 2 3

UNIT: 3592
PROJECT NUMBER & PHASE: 0300000474 1
CONTRACT NO.: 03-3E1201

DISREGARD PRINTS BEARING EARLIER REVISION DATES

REVISION DATES: 10-11-13 1-15-14 11-14-13

SHEET 2 OF 11

FILE => 12-0138-a-itp_gp.dgn

USERNAME => s119538 DATE PLOTTED => 06-MAY-2014 TIME PLOTTED => 09:27

| DIST | COUNTY | ROUTE | POST MILES TOTAL PROJECT | SHEET No. | TOTAL SHEETS |
|---|---|---|---|---|---|
| 03 | But | 70 | 26.7, 27.1 | 75 | 83 |

REGISTERED CIVIL ENGINEER 2-28-14 DATE

4-28-14
PLANS APPROVAL DATE

REGISTERED PROFESSIONAL ENGINEER Keith Stillmunkes No. 68878 Exp. 9-30-15 CIVIL STATE OF CALIFORNIA

*The State of California or its officers or agents shall not be responsible for the accuracy or completeness of electronic copies of this plan sheet.*

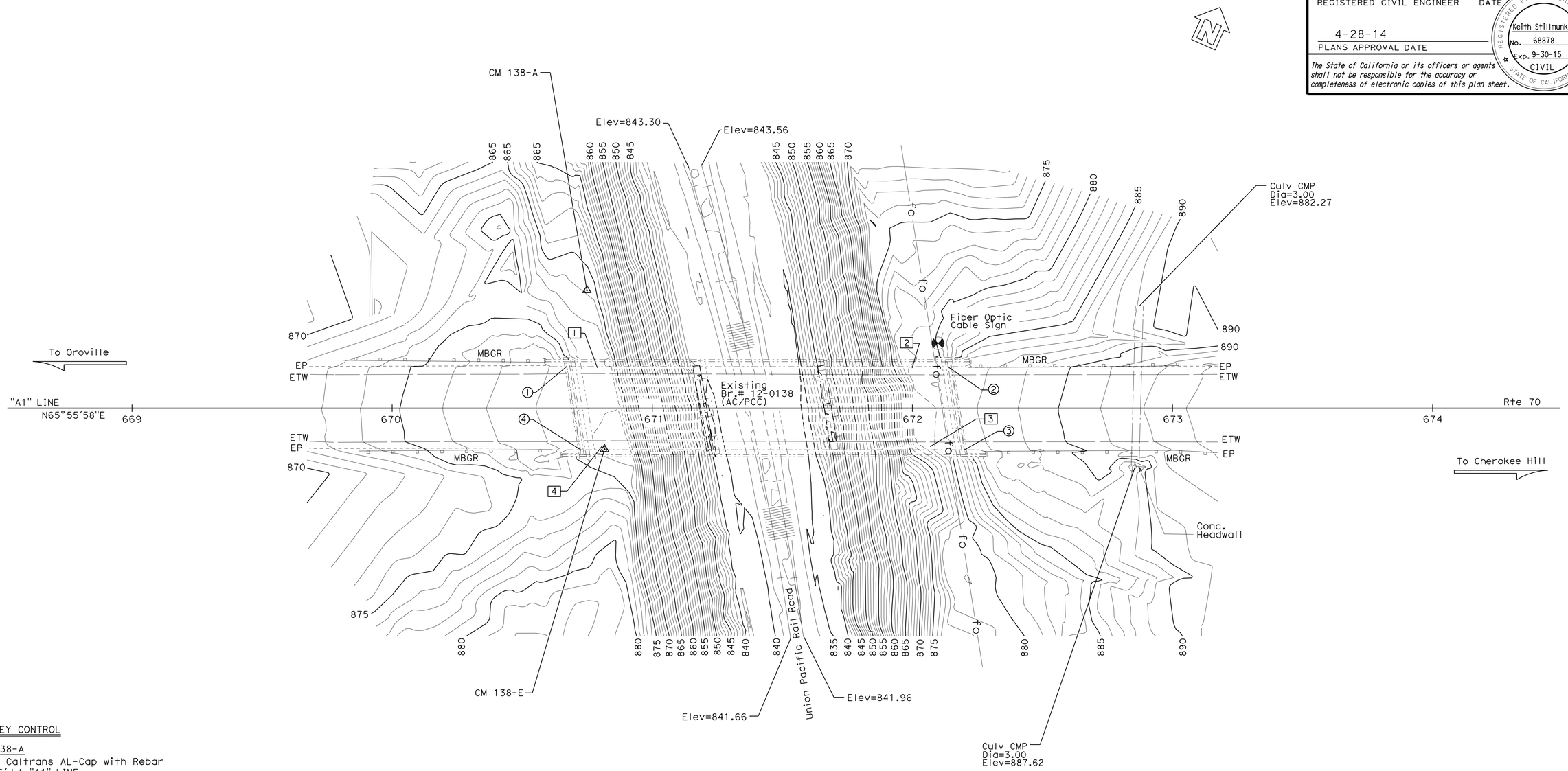


SURVEY CONTROL

CM 138-A
Fnd Caltrans AL-Cap with Rebar
45.36' Lt "A1" LINE
Sta 670+74.87
N 2,363,938.26
E 6,687,250.04
Elev=870.90

CM 138-E
Fnd Spk Nail
15.75' Rt "A1" LINE
Sta 670+81.64
N 2,363,885.22
E 6,687,281.14
Elev=879.14

Bridge Soffit Elev (Bottom of Girder)

| | | | |
|---|---|---|---|
| 1 | 875.18 | 2 | 882.31 |
| 3 | 882.69 | 4 | 875.32 |

Bridge Location #12-0138 (PN Points)

1. 16.06' Lt "A1" Line, Sta 670+67.27, Elev=878.37 (AC)
2. 15.70' Lt "A1" Line, Sta 672+13.98, Elev=886.94 (AC)
3. 16.03' Rt "A1" Line, Sta 672+19.95, Elev=887.21 (AC)
4. 15.98' Rt "A1" Line, Sta 670+72.51, Elev=878.62 (AC)

LEGEND:

—fo—fo— DESIGNATES EXISTING FIBER OPTIC LINE

PRELIMINARY INVESTIGATION SECTION

| SCALE | VERT.DATUM NAVD88 | PHOTOGRAMMETRY AS OF: X | | | | |
|---|---|---|---|---|---|---|
| 1"=20' | HORZ.DATUM NAD83 | SURVEYED | BY DISTRICT | CHECKED | BY SANG SOU | 11/2013 |
| ALIGNMENT TIES Dist. Traverse Sheet | | DRAFTED | BY SHARON ZHENG 11/2013 | CHECKED | BY JOHN BORDEN | 11/2013 |

STRUCTURES FOUNDATION PLAN SHEET (ENGLISH) (REV. 09-01-10) X

| | | | |
|---|---|---|---|
| DESIGN | BY Keith Stillmunkes | CHECKED | M. Guadamuz |
| DETAILS | BY Yingjue Feng | CHECKED | M. Guadamuz |
| QUANTITIES | BY Tracy Sanderson | CHECKED | Jon Szabo |

ORIGINAL SCALE IN INCHES FOR REDUCED PLANS 0 1 2 3

STATE OF CALIFORNIA
DEPARTMENT OF TRANSPORTATION

DIVISION OF ENGINEERING SERVICES
STRUCTURE DESIGN
DESIGN BRANCH 16

BRIDGE NO. 12-0138
POST MILE 26.81

# PENTZ OH (RETROFIT)
# FOUNDATION PLAN

UNIT: 3592
PROJECT NUMBER & PHASE: 03 0000 0474 1 CONTRACT NO.: 03-3E1201

DISREGARD PRINTS BEARING EARLIER REVISION DATES

REVISION DATES 11/2/2013 1-15-14

SHEET 3 OF 11

FILE => 12-0138-b-fpl@1.dgn

USERNAME => s13538 DATE PLOTTED => 06-MAY-2014 TIME PLOTTED => 09:27

| DIST | COUNTY | ROUTE | POST MILES TOTAL PROJECT | SHEET No. | TOTAL SHEETS |
|---|---|---|---|---|---|
| 03 | But | 70 | 26.7, 27.1 | 76 | 83 |

REGISTERED CIVIL ENGINEER 2-28-14 DATE

4-28-14
PLANS APPROVAL DATE

REGISTERED PROFESSIONAL ENGINEER
Keith Stillmunkes
No. 68878
Exp. 9-30-15
CIVIL
STATE OF CALIFORNIA

*The State of California or its officers or agents shall not be responsible for the accuracy or completeness of electronic copies of this plan sheet.*

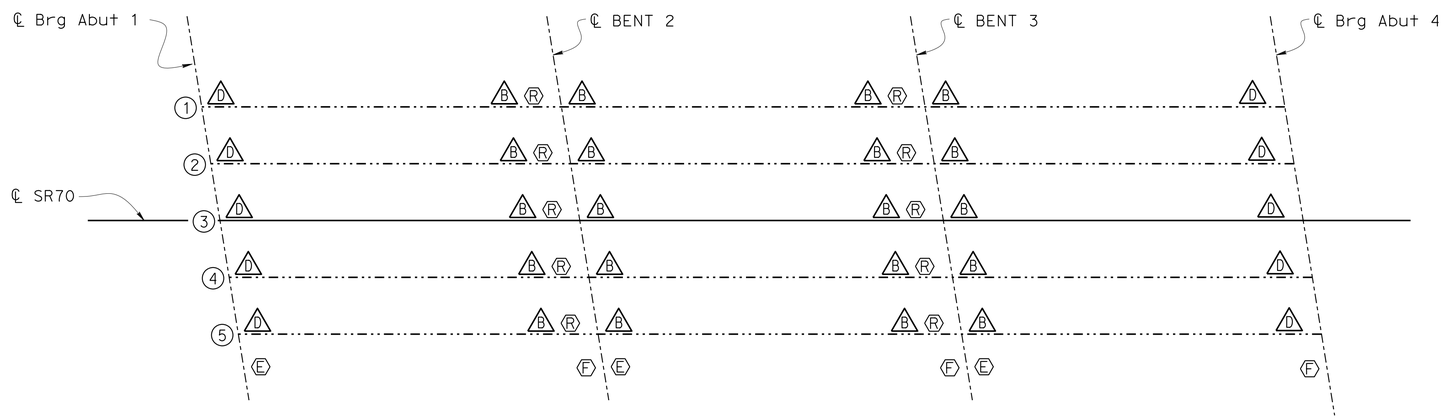


## STRUCTURE LAYOUT

1" = 10'

## LEGEND:

- ◯ - Indicates girder number
- B - Indicates bent seat extension
- D - Indicates abutment seat extension Type D
- R - Indicates restrainer assembly
- E - Indicates expansion bearings
- F - Indicates fixed bearings

NOTE:
THE CONTRACTOR SHALL VERIFY ALL CONTROLLING FIELD DIMENSIONS BEFORE ORDERING OR FABRICATING ANY MATERIAL.

| | BY | CHECKED |
|---|---|---|
| DESIGN | Keith Stillmunkes | Mario Guadamuz |
| DETAILS | Lan T Tran | Mario Guadamuz |
| QUANTITIES | Tracy Sanderson | Jon Szabo |

STATE OF CALIFORNIA
DEPARTMENT OF TRANSPORTATION

DIVISION OF ENGINEERING SERVICES
STRUCTURE DESIGN
DESIGN BRANCH 7

BRIDGE NO. 12-0138
POST MILE 26.81

# PENTZ OVERHEAD (REHAB & RETROFIT)
## STRUCTURE LAYOUT

STRUCTURES DESIGN DETAIL SHEET (ENGLISH) (REV. 09-01-10)

ORIGINAL SCALE IN INCHES FOR REDUCED PLANS 0 1 2 3

UNIT: 3592
PROJECT NUMBER & PHASE: 0300000474 1
CONTRACT NO.: 03-3E1201

DISREGARD PRINTS BEARING EARLIER REVISION DATES

REVISION DATES 11-19-13

SHEET 4 OF 11

FILE => 12-0138-c-sp_gp.dgn

USERNAME => s119538 DATE PLOTTED => 06-MAY-2014 TIME PLOTTED => 03:27

| DIST | COUNTY | ROUTE | POST MILES TOTAL PROJECT | SHEET No. | TOTAL SHEETS |
|---|---|---|---|---|---|
| 03 | But | 70 | 26.7, 27.1 | 77 | 83 |

REGISTERED CIVIL ENGINEER 2-28-14 DATE

4-28-14
PLANS APPROVAL DATE

REGISTERED PROFESSIONAL ENGINEER Keith Stillmunkes No. 68878 Exp. 9-30-15 CIVIL STATE OF CALIFORNIA

*The State of California or its officers or agents shall not be responsible for the accuracy or completeness of electronic copies of this plan sheet.*

| TABLE A | | |
|---|---|---|
| GIRDER NUMBER | Abut 1 X | Abut 4 X |
| 1 | 7'-0"± | 7'-7"± |
| 2 | 7'-1"± | 7'-8"± |
| 3 | 7'-1"± | 7'-8"± |
| 4 | 7'-2"± | 7'-9"± |
| 5 | 7'-3"± | 7'-10"± |

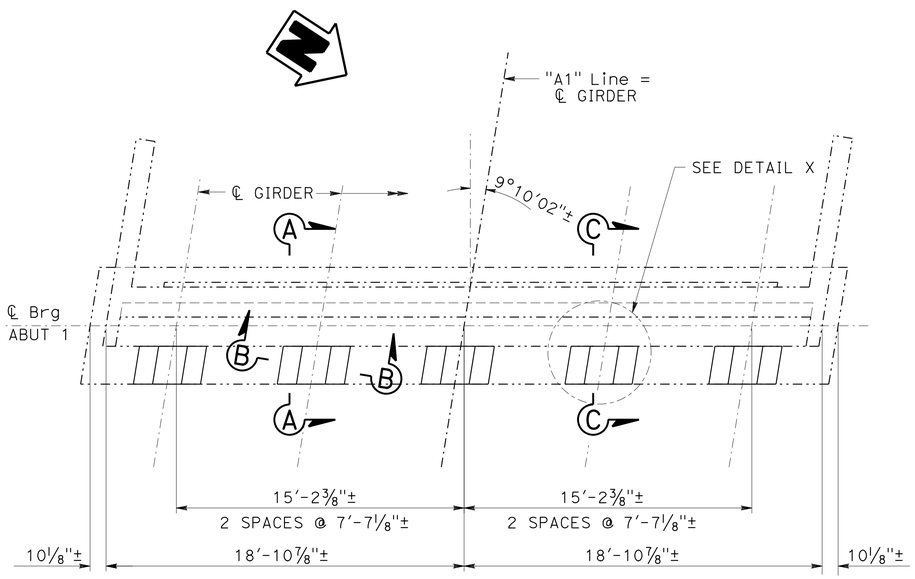


## PLAN
¼" = 1'-0"

NOTES:

1. For "DETAIL X" and "SECTION C-C" see "ABUTMENT DETAILS NO. 1" sheet
2. Abutment 1 shown, Abutment 4 similar

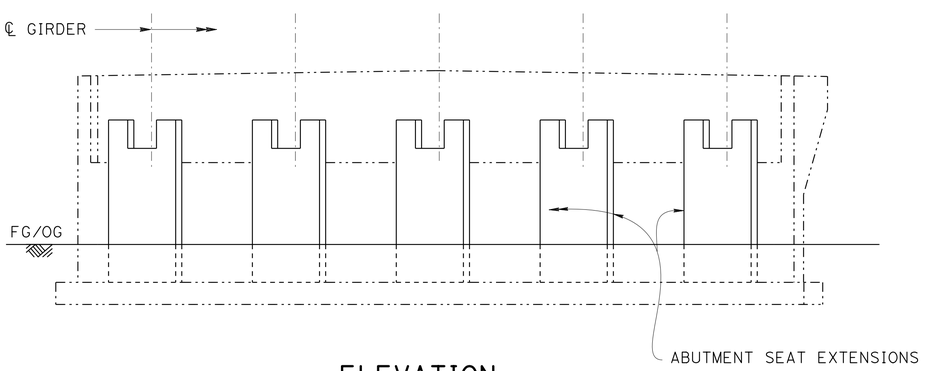


## ELEVATION
¼" = 1'-0"

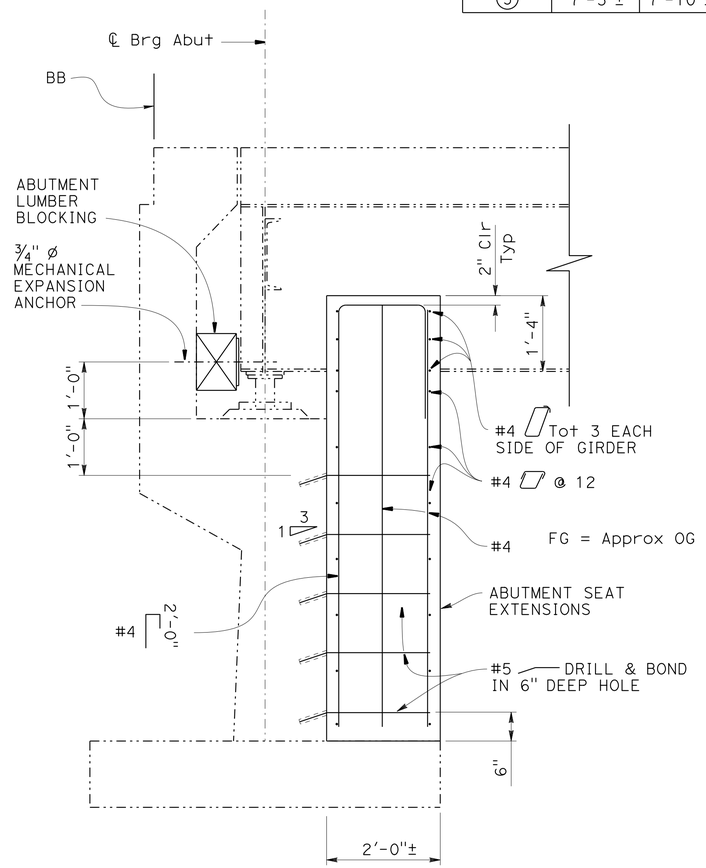


## SECTION A-A
¾" = 1'-0"

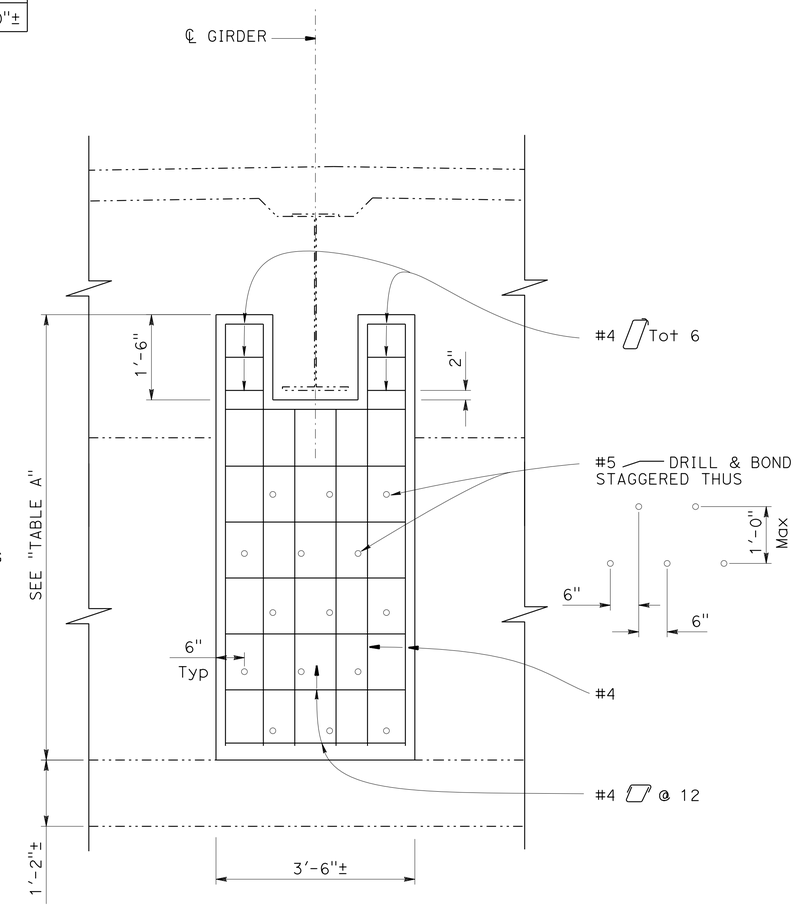


## SECTION B-B
¾" = 1'-0"

NOTE:
THE CONTRACTOR SHALL VERIFY ALL CONTROLLING FIELD DIMENSIONS BEFORE ORDERING OR FABRICATING ANY MATERIAL.

| | | | |
|---|---|---|---|
| DESIGN | BY Keith Stillmunkes | CHECKED Mario Guadamuz | |
| DETAILS | BY Lan T Tran | CHECKED Mario Guadamuz | |
| QUANTITIES | BY Tracy Sanderson | CHECKED Jon Szabo | |

STATE OF CALIFORNIA
DEPARTMENT OF TRANSPORTATION

DIVISION OF ENGINEERING SERVICES
STRUCTURE DESIGN
DESIGN BRANCH 7

BRIDGE NO. 12-0138
POST MILE 26.81

# PENTZ OVERHEAD (REHAB & RETROFIT)
## ABUTMENT LAYOUT

STRUCTURES DESIGN DETAIL SHEET (ENGLISH) (REV. 09-01-10)

ORIGINAL SCALE IN INCHES FOR REDUCED PLANS 0 1 2 3

UNIT: 3592
PROJECT NUMBER & PHASE: 0300000474 1
CONTRACT NO.: 03-3E1201

DISREGARD PRINTS BEARING EARLIER REVISION DATES

REVISION DATES 10-22-13 11-07-13 11-19-13 1-15-14

SHEET 5 OF 11

FILE => 12-0138-f-a01-dt01_gp.dgn

USERNAME => s119538 DATE PLOTTED => 06-MAY-2014 TIME PLOTTED => 09:27

| DIST | COUNTY | ROUTE | POST MILES TOTAL PROJECT | SHEET No. | TOTAL SHEETS |
|---|---|---|---|---|---|
| 03 | But | 70 | 26.7, 27.1 | 78 | 83 |

REGISTERED CIVIL ENGINEER 2-28-14 DATE

4-28-14
PLANS APPROVAL DATE

REGISTERED PROFESSIONAL ENGINEER Keith Stillmunkes No. 68878 Exp. 9-30-15 CIVIL STATE OF CALIFORNIA

*The State of California or its officers or agents shall not be responsible for the accuracy or completeness of electronic copies of this plan sheet.*

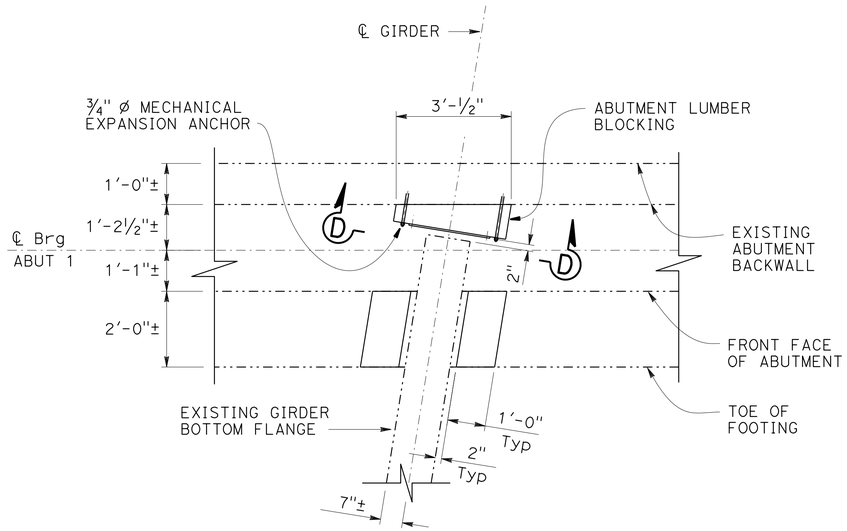


## DETAIL X

½" = 1'-0"

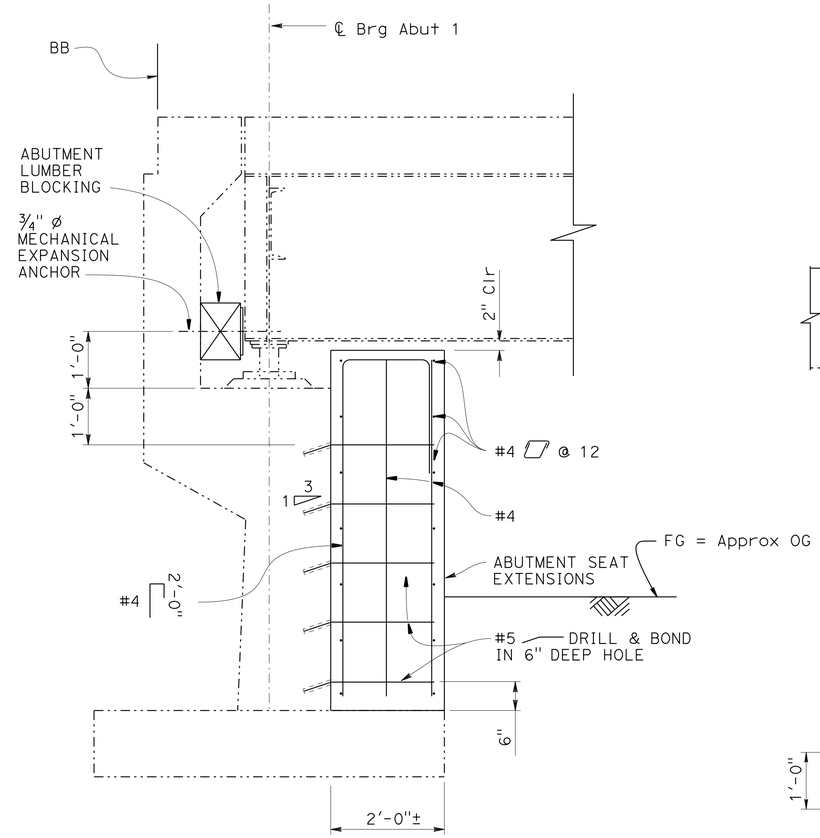


## SECTION C-C

¾" = 1'-0"

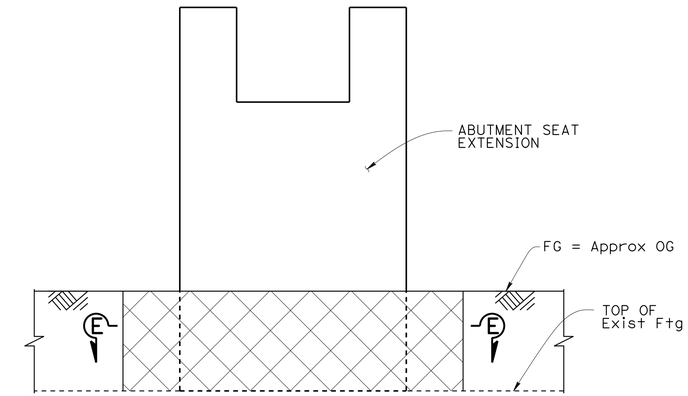


## ELEVATION AND BACKFILL AT ABUTMENT SEAT EXTENSION

NO SCALE

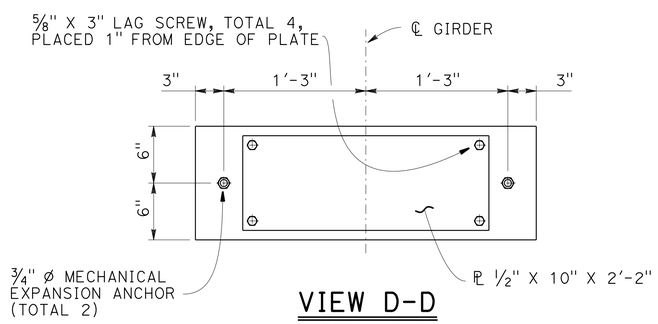


## VIEW D-D

1½" = 1'-0"

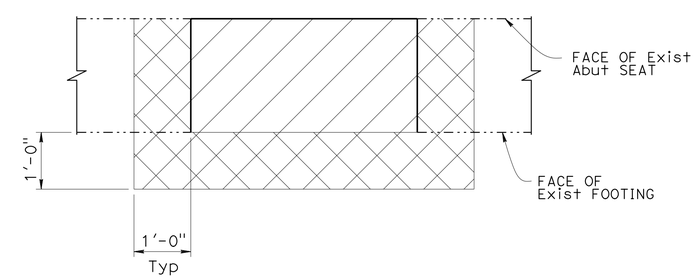


## SECTION E-E

NO SCALE

NOTES:

1. Abutment 1 shown, Abutment 4 similar

LEGEND:

- Structure Excavation
- Structure Backfill

NOTE:
THE CONTRACTOR SHALL VERIFY ALL CONTROLLING FIELD DIMENSIONS BEFORE ORDERING OR FABRICATING ANY MATERIAL.

| | BY | CHECKED |
|---|---|---|
| DESIGN | Keith Stillmunkes | Mario Guadamuz |
| DETAILS | Lan T Tran | Mario Guadamuz |
| QUANTITIES | Tracy Sanderson | Jon Szabo |

STATE OF CALIFORNIA
DEPARTMENT OF TRANSPORTATION

DIVISION OF ENGINEERING SERVICES
STRUCTURE DESIGN
DESIGN BRANCH 7

BRIDGE NO. 12-0138
POST MILE 26.81

# PENTZ OVERHEAD (REHAB & RETROFIT)

## ABUTMENT DETAILS NO. 1

STRUCTURES DESIGN DETAIL SHEET (ENGLISH) (REV. 09-01-10)

ORIGINAL SCALE IN INCHES FOR REDUCED PLANS 0 1 2 3

UNIT: 3592
PROJECT NUMBER & PHASE: 0300000474 1
CONTRACT NO.: 03-3E1201

DISREGARD PRINTS BEARING EARLIER REVISION DATES

REVISION DATES 10-22-13 11-06-13 11-19-13 1-15-14

SHEET 6 OF 11

FILE => 12-0138-f-a01-dt02_gp.dgn

USERNAME => s119538 DATE PLOTTED => 06-MAY-2014 TIME PLOTTED => 03:27

| DIST | COUNTY | ROUTE | POST MILES TOTAL PROJECT | SHEET No. | TOTAL SHEETS |
|---|---|---|---|---|---|
| 03 | But | 70 | 26.7, 27.1 | 79 | 83 |

REGISTERED CIVIL ENGINEER 2-28-14 DATE

4-28-14
PLANS APPROVAL DATE

REGISTERED PROFESSIONAL ENGINEER Keith Stillmunkes No. 68878 Exp. 9-30-15 CIVIL STATE OF CALIFORNIA

*The State of California or its officers or agents shall not be responsible for the accuracy or completeness of electronic copies of this plan sheet.*

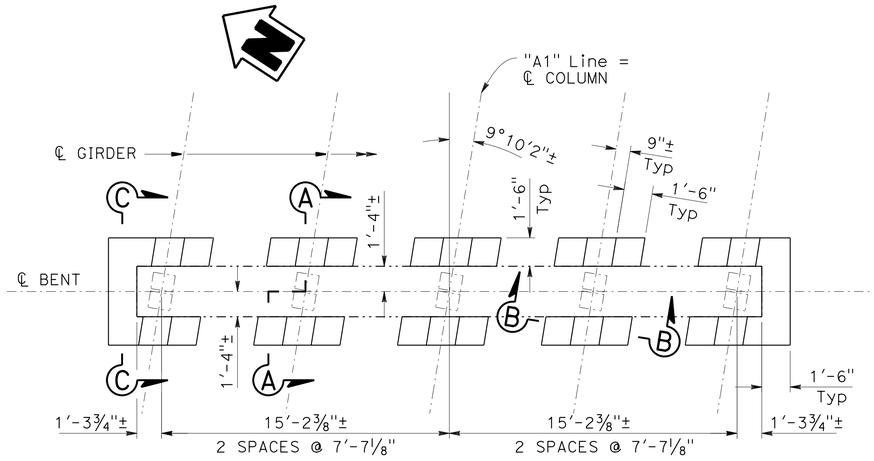


## PLAN
¼" = 1'-0"

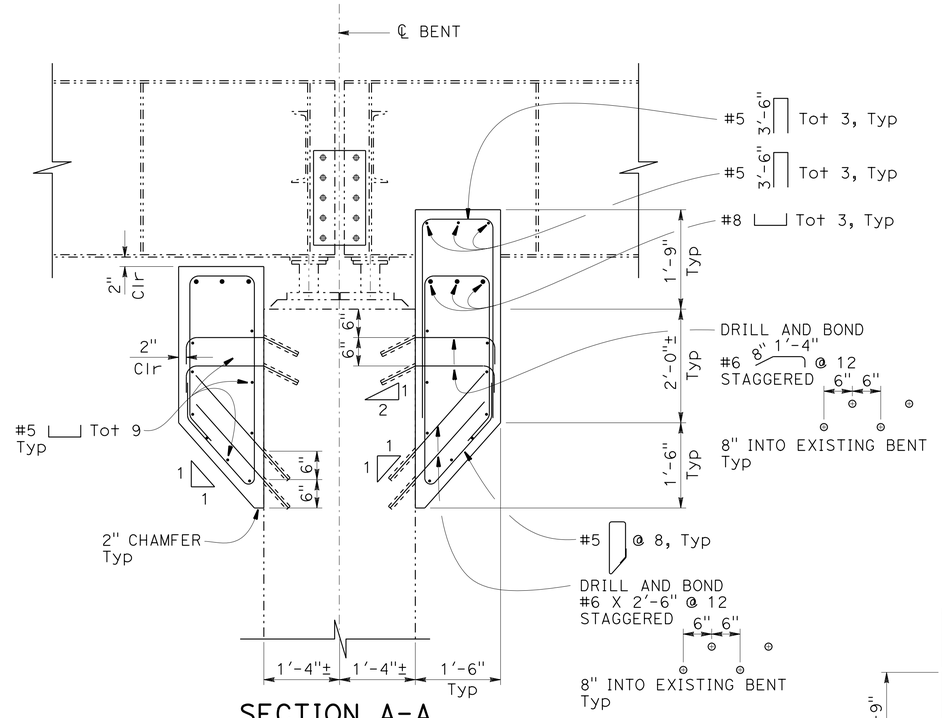


## SECTION A-A
¾" = 1'-0"

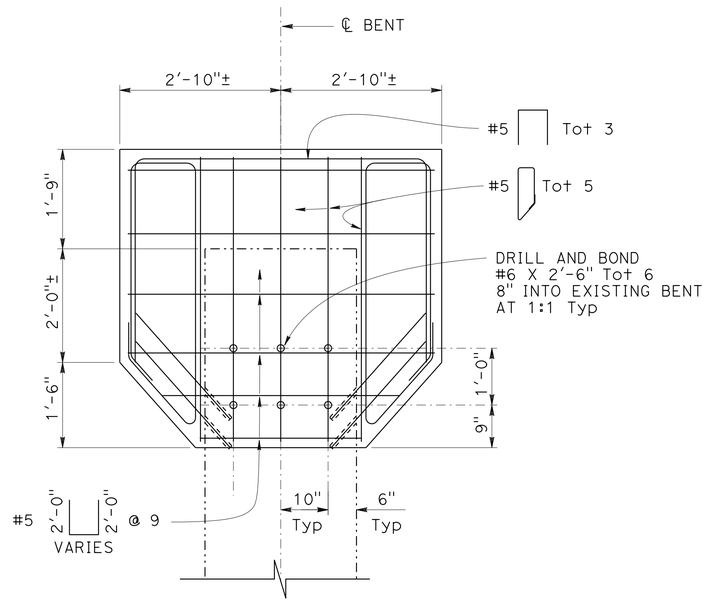


## SECTION C-C
¾" = 1'-0"

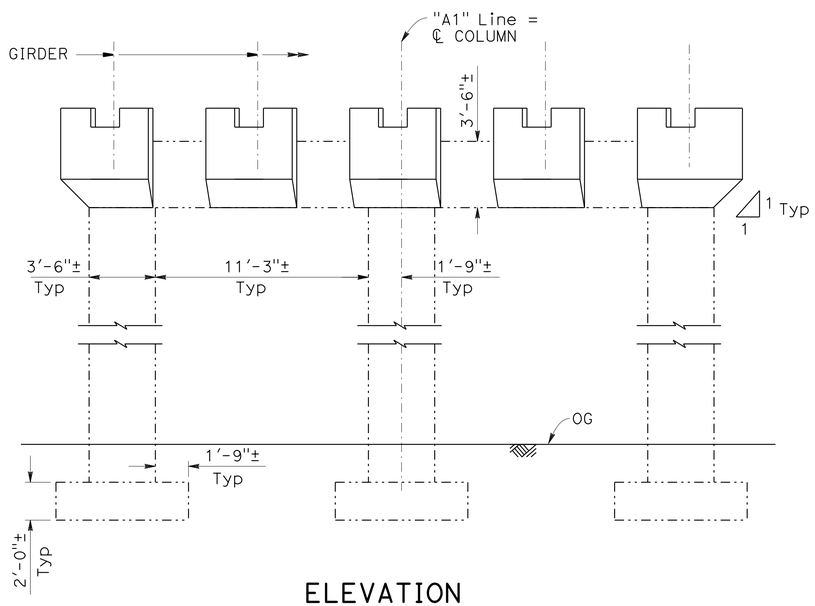


## ELEVATION
¼" = 1'-0"

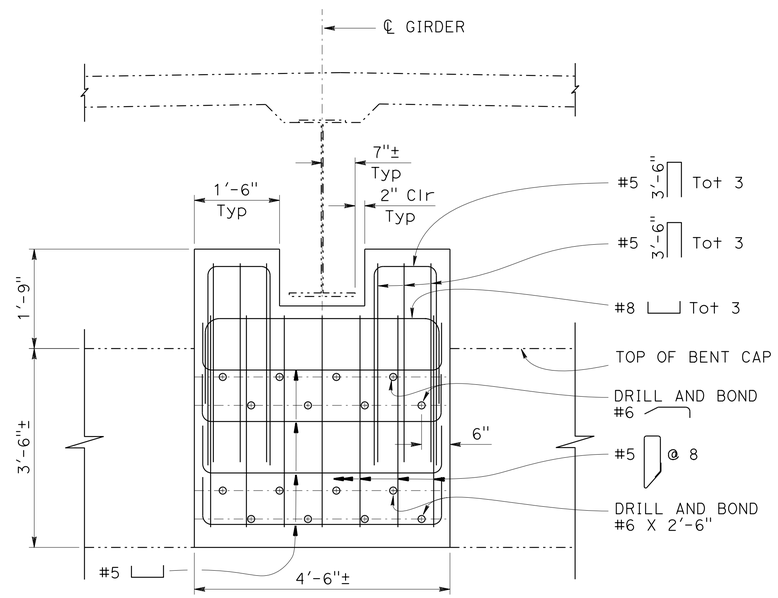


## SECTION B-B
¾" = 1'-0"

NOTE:
THE CONTRACTOR SHALL VERIFY ALL CONTROLLING FIELD DIMENSIONS BEFORE ORDERING OR FABRICATING ANY MATERIAL.

| | BY | CHECKED |
|---|---|---|
| DESIGN | Keith Stillmunkes | Mario Guadamuz |
| DETAILS | Lan T Tran | Mario Guadamuz |
| QUANTITIES | Tracy Sanderson | Jon Szabo |

STATE OF CALIFORNIA
DEPARTMENT OF TRANSPORTATION

DIVISION OF ENGINEERING SERVICES
STRUCTURE DESIGN
DESIGN BRANCH 7

BRIDGE NO. 12-0138
POST MILE 26.81

# PENTZ OVERHEAD (REHAB & RETROFIT)
## BENT LAYOUT

STRUCTURES DESIGN DETAIL SHEET (ENGLISH) (REV. 09-01-10)

ORIGINAL SCALE IN INCHES FOR REDUCED PLANS 0 1 2 3

UNIT: 3592
PROJECT NUMBER & PHASE: 0300000474 1
CONTRACT NO.: 03-3E1201

DISREGARD PRINTS BEARING EARLIER REVISION DATES

REVISION DATES: 11-19-13

SHEET 7 OF 11

FILE => 12-0138-h-bdt01_gp.dgn

USERNAME => s119538 DATE PLOTTED => 06-MAY-2014 TIME PLOTTED => 09:27

| DIST | COUNTY | ROUTE | POST MILES TOTAL PROJECT | SHEET No. | TOTAL SHEETS |
|---|---|---|---|---|---|
| 03 | But | 70 | 26.7, 27.1 | 80 | 83 |

REGISTERED CIVIL ENGINEER 2-28-14 DATE

4-28-14
PLANS APPROVAL DATE

REGISTERED PROFESSIONAL ENGINEER
Keith Stillmunkes
No. 68878
Exp. 9-30-15
CIVIL
STATE OF CALIFORNIA

*The State of California or its officers or agents shall not be responsible for the accuracy or completeness of electronic copies of this plan sheet.*

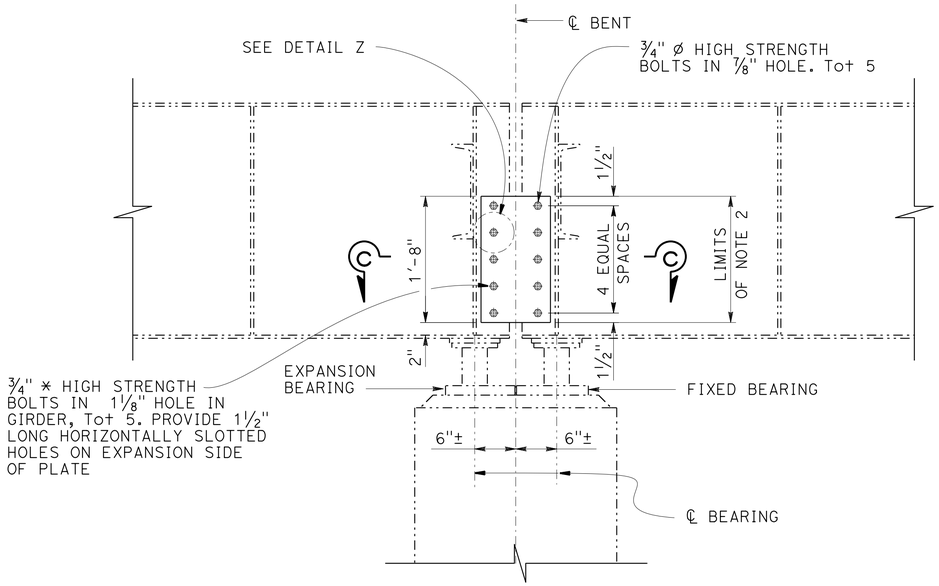


## RESTRAINER DETAIL

1" = 1'-0"

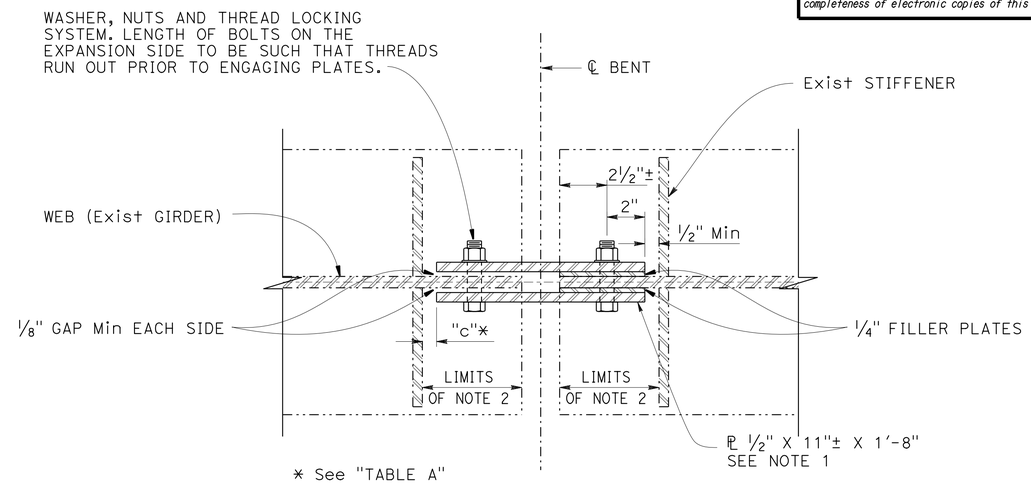


## SECTION C-C

3" = 1'-0"

NOTES:

1. CLEAN AND PAINT STRUCTURAL STEEL ON ALL SURFACES OF STEEL PLATE RESTRAINER
2. CLEAN EXISTING STRUCTURAL STEEL, BOTH SIDES OF EXISTING GIRDER.

| SEASON | "b" | "c" |
|---|---|---|
| WINTER | 1¾" | 1"± |
| SPRING & FALL | 2" | ¾"± |
| SUMMER | 2¼" | ½"± |

## TABLE A

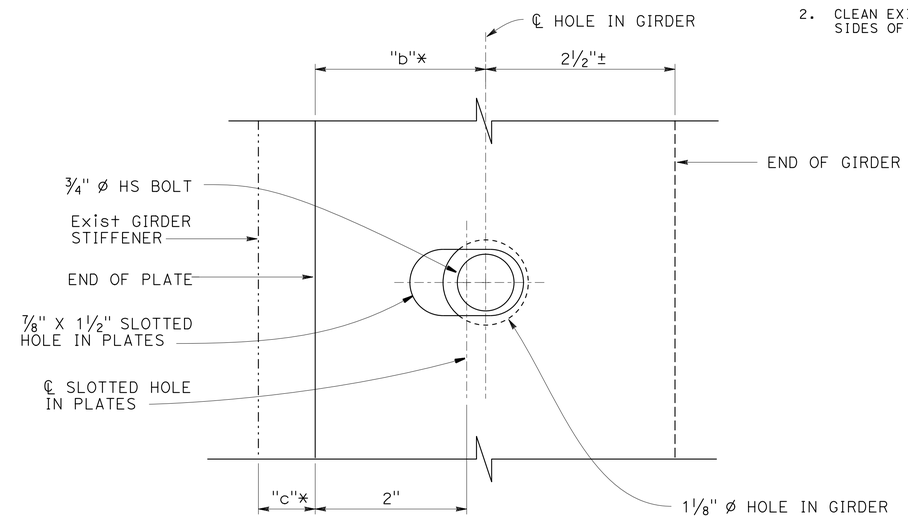


## DETAIL Z

1" = 1"

* See "TABLE A"

NOTE:
THE CONTRACTOR SHALL VERIFY ALL CONTROLLING FIELD DIMENSIONS BEFORE ORDERING OR FABRICATING ANY MATERIAL.

| | BY | CHECKED |
|---|---|---|
| DESIGN | Keith Stillmunkes | Mario Guadamuz |
| DETAILS | Lan T Tran | Mario Guadamuz |
| QUANTITIES | Tracy Sanderson | Jon Szabo |

STATE OF CALIFORNIA
DEPARTMENT OF TRANSPORTATION

DIVISION OF ENGINEERING SERVICES
STRUCTURE DESIGN
DESIGN BRANCH 7

BRIDGE NO. 12-0138
POST MILE 26.81

# PENTZ OVERHEAD (REHAB & RETROFIT)
## BENT DETAILS NO. 1

STRUCTURES DESIGN DETAIL SHEET (ENGLISH) (REV. 09-01-10)

ORIGINAL SCALE IN INCHES FOR REDUCED PLANS 0 1 2 3

UNIT: 3592
PROJECT NUMBER & PHASE: 0300000474 1
CONTRACT NO.: 03-3E1201

DISREGARD PRINTS BEARING EARLIER REVISION DATES

REVISION DATES

SHEET 8 OF 11

FILE => 12-0138-h-bdt02_gp.dgn

USERNAME => s113538 DATE PLOTTED => 06-MAY-2014 TIME PLOTTED => 09:27

| DIST | COUNTY | ROUTE | POST MILES TOTAL PROJECT | SHEET No. | TOTAL SHEETS |
|---|---|---|---|---|---|
| 03 | But | 70 | 26.7, 27.1 | 81 | 83 |

REGISTERED CIVIL ENGINEER 2-28-14 DATE

4-28-14
PLANS APPROVAL DATE

REGISTERED PROFESSIONAL ENGINEER Keith Stillmunkes No. 68878 Exp. 9-30-15 CIVIL STATE OF CALIFORNIA

*The State of California or its officers or agents shall not be responsible for the accuracy or completeness of electronic copies of this plan sheet.*

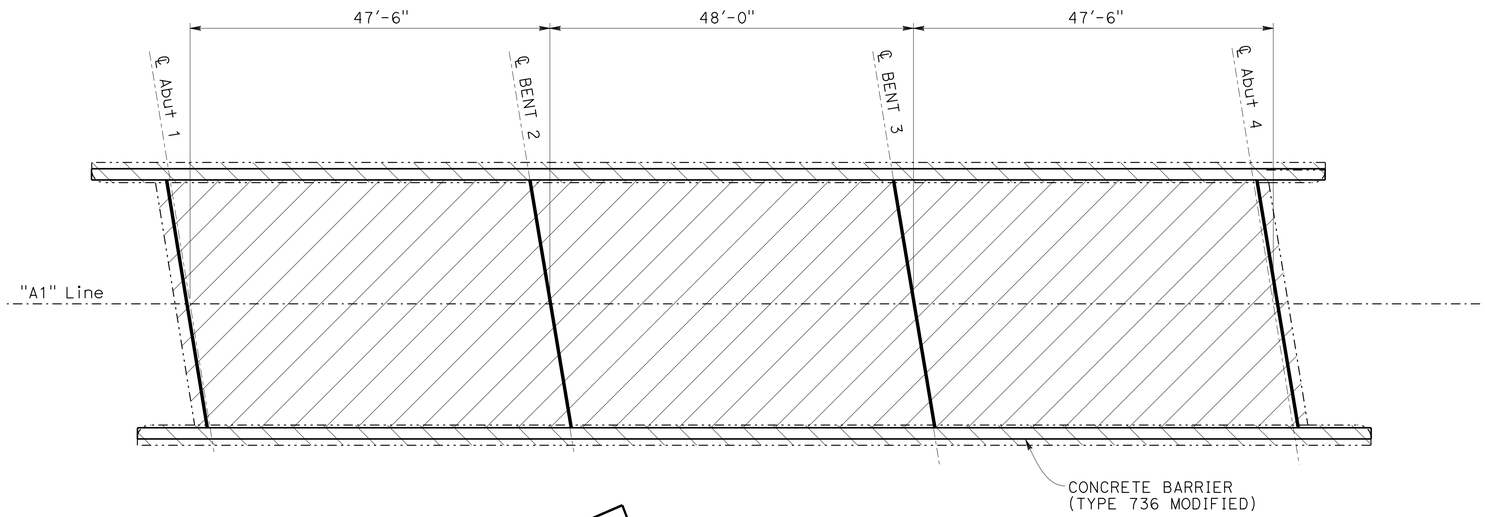


## PLAN

1" = 10'-0"

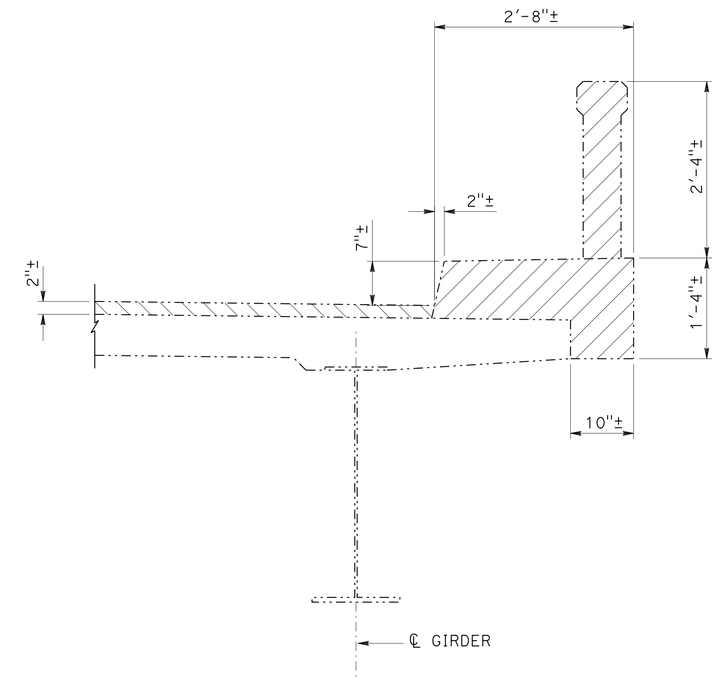


## BARRIER REMOVAL DETAIL

1" = 1'-0"

## LEGEND:

Existing Structure

Clean Expansion Joint
Install new Joint Seal

Remove Exist Barrier

Remove 2" AC surfacing
Place 1" polyester concrete overlay

## NOTES:

1. For remove unsound concrete and place rapid setting concrete patch, see "DECK REHABILITATION DETAILS NO. 2"
2. Approximate span lengths measured along "A1" Line.

## LEGEND:

Existing Structure

Barrier removal

AC surfacing removal

NOTE:
THE CONTRACTOR SHALL VERIFY ALL CONTROLLING FIELD DIMENSIONS BEFORE ORDERING OR FABRICATING ANY MATERIAL.

| | BY | CHECKED |
|---|---|---|
| DESIGN | Keith Stillmunkes | Mario Guadamuz |
| DETAILS | Lan T Tran | Mario Guadamuz |
| QUANTITIES | Tracy Sanderson | Jon Szabo |

STATE OF CALIFORNIA
DEPARTMENT OF TRANSPORTATION

DIVISION OF ENGINEERING SERVICES
STRUCTURE DESIGN
DESIGN BRANCH 7

BRIDGE NO. 12-0138
POST MILE 26.81

# PENTZ OVERHEAD (REHAB & RETROFIT)
# DECK REHABILITATION DETAILS NO. 1

STRUCTURES DESIGN DETAIL SHEET (ENGLISH) (REV. 09-01-10)

ORIGINAL SCALE IN INCHES FOR REDUCED PLANS 0 1 2 3

UNIT: 3592
PROJECT NUMBER & PHASE: 0300000474 1
CONTRACT NO.: 03-3E1201

DISREGARD PRINTS BEARING EARLIER REVISION DATES

REVISION DATES: 1-15-14

SHEET 9 OF 11

FILE => 12-0138-i-deckdt01_gp.dgn

USERNAME => s119538 DATE PLOTTED => 06-MAY-2014 TIME PLOTTED => 09:27

| DIST | COUNTY | ROUTE | POST MILES TOTAL PROJECT | SHEET No. | TOTAL SHEETS |
|---|---|---|---|---|---|
| 03 | But | 70 | 26.7, 27.1 | 82 | 83 |

REGISTERED CIVIL ENGINEER 2-28-14 DATE

4-28-14
PLANS APPROVAL DATE

REGISTERED PROFESSIONAL ENGINEER Keith Stillmunkes No. 68878 Exp. 9-30-15 CIVIL STATE OF CALIFORNIA

*The State of California or its officers or agents shall not be responsible for the accuracy or completeness of electronic copies of this plan sheet.*

## DECK REPAIR TABLE

Remove unsound concrete and patch with rapid setting concrete

| Bridge Name | Bridge Number | Approximate area of unsound concrete deck (percent) | Approximate depth of unsound concrete (inches) | Approximate volume of unsound concrete (cf) | Approximate volume of Rapid-set concrete patch (cf) |
|---|---|---|---|---|---|
| PENTZ OVERHEAD | 12-0138 | 3 | 3± | 40 | 40 |

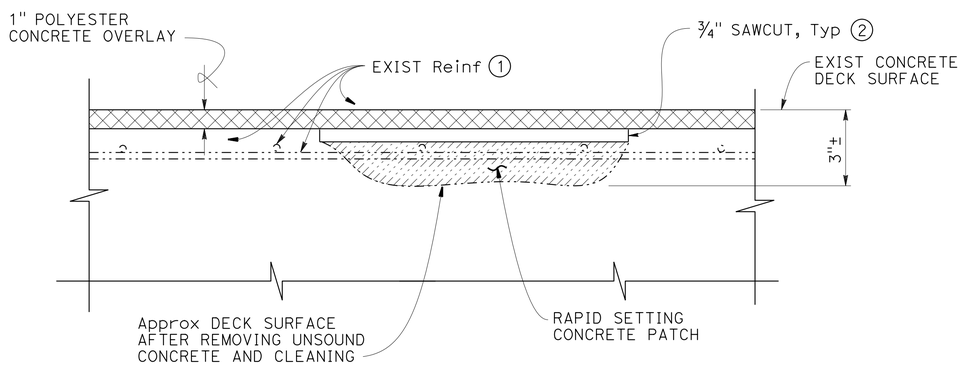


## DECK REPAIR DETAIL

NO SCALE

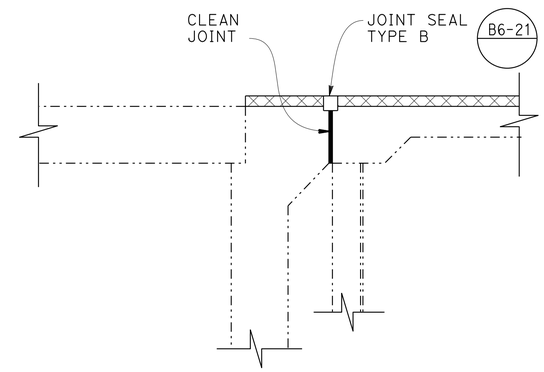


## EXISTING JOINTS AT ABUTMENTS

¾" = 1'-0"

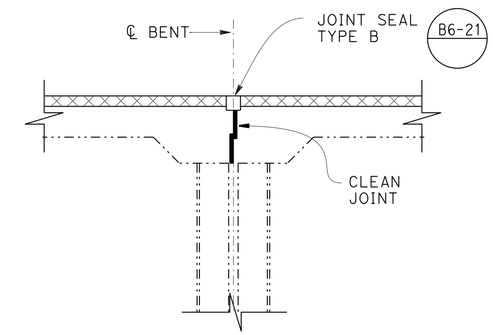


## EXISTING JOINTS AT BENTS

¾" = 1'-0"

## NOTES:

1. Reinforcement may be encountered during concrete removal and is to remain undamaged.
2. ¾" sawcut limits shall be made in rectangular shape

## LEGEND:

- Unsound concrete removal area
- 1" Polyester concrete overlay
- Existing

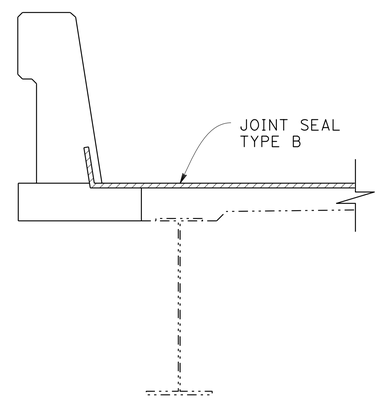


## EXISTING JOINTS AT LOW SIDE OF DECK

¾" = 1'-0"

## JOINT SEAL TABLE

| Location | Station | Approximate length | Min "MR" (in) | Approx Depth to Clean Joint (in) | Existing Water Stop |
|---|---|---|---|---|---|
| Abut 1 | 670+75± | 34'-2" | 1 | 12 | None |
| Bent 2 | 671+23± | 34'-2" | 1 | 9½ | None |
| Bent 3 | 671+71± | 34'-2" | 1 | 9½ | None |
| Abut 4 | 672+19± | 34'-2" | 1 | 12 | None |

NOTE:
THE CONTRACTOR SHALL VERIFY ALL CONTROLLING FIELD DIMENSIONS BEFORE ORDERING OR FABRICATING ANY MATERIAL.

| | BY | CHECKED |
|---|---|---|
| DESIGN | Keith Stillmunkes | Mario Guadamuz |
| DETAILS | Lan T Tran | Mario Guadamuz |
| QUANTITIES | Tracy Sanderson | Jon Szabo |

STATE OF CALIFORNIA
DEPARTMENT OF TRANSPORTATION

DIVISION OF ENGINEERING SERVICES
STRUCTURE DESIGN
DESIGN BRANCH 7

BRIDGE NO. 12-0138
POST MILE 26.81

# PENTZ OVERHEAD (REHAB & RETROFIT)
# DECK REHABILITATION DETAILS NO. 2

STRUCTURES DESIGN DETAIL SHEET (ENGLISH) (REV. 09-01-10)

ORIGINAL SCALE IN INCHES FOR REDUCED PLANS 0 1 2 3

UNIT: 3592
PROJECT NUMBER & PHASE: 0300000474 1
CONTRACT NO.: 03-3E1201

DISREGARD PRINTS BEARING EARLIER REVISION DATES

REVISION DATES 1-15-14

SHEET 10 OF 11

FILE => 12-0138-i-deckdt02_gp.dgn

USERNAME => s119538 DATE PLOTTED => 06-MAY-2014 TIME PLOTTED => 09:27

| DIST | COUNTY | ROUTE | POST MILES TOTAL PROJECT | SHEET No. | TOTAL SHEETS |
|---|---|---|---|---|---|
| 03 | But | 70 | 26.7, 27.1 | 83 | 83 |

REGISTERED CIVIL ENGINEER 2-28-14 DATE

4-28-14
PLANS APPROVAL DATE

REGISTERED PROFESSIONAL ENGINEER Keith Stillmunkes No. 68878 Exp. 9-30-15 CIVIL STATE OF CALIFORNIA

*The State of California or its officers or agents shall not be responsible for the accuracy or completeness of scanned copies of this plan sheet.*

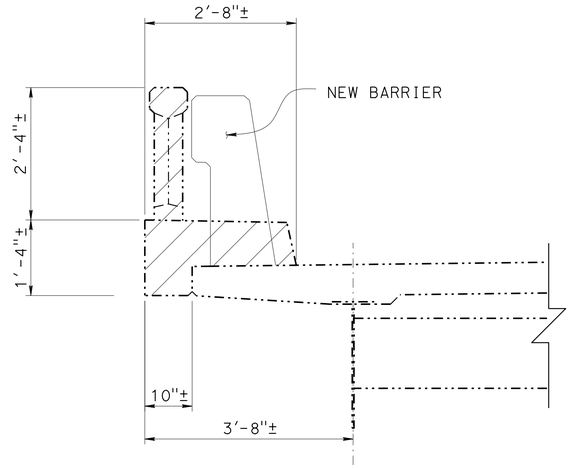


## EXISTING BARRIER REMOVAL PART TYPICAL SECTION

3/4"=1'-0"

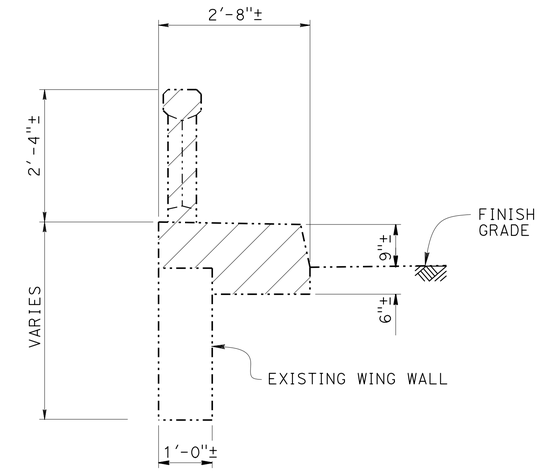


## EXISTING BARRIER REMOVAL OVER WINGWALL

3/4"=1'-0"

Indicates concrete removal

Indicates existing

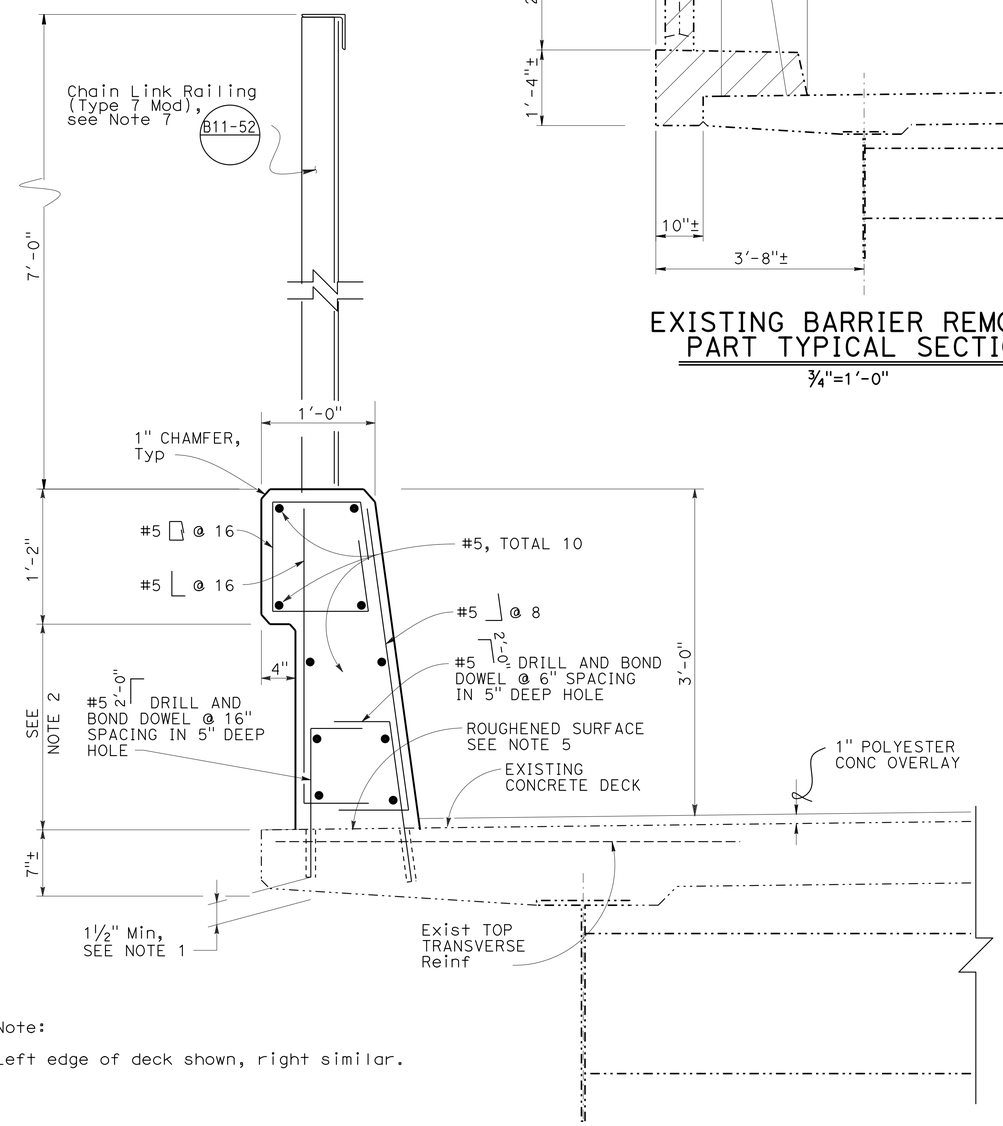


Note:

Left edge of deck shown, right similar.

## BARRIER REPLACEMENT PART TYPICAL SECTION

1½" =1'-0"

RSP B11-56

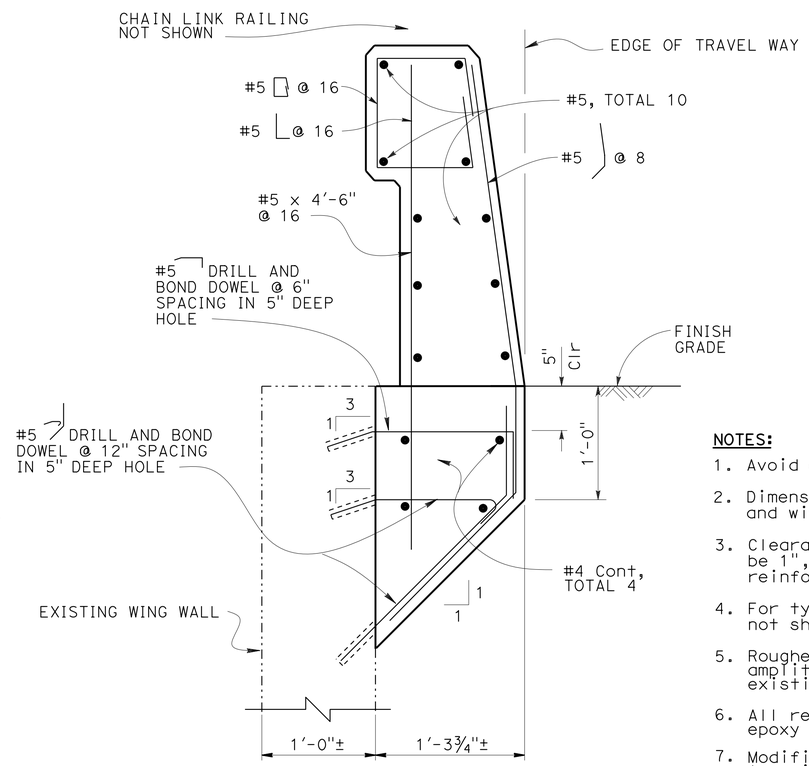


## TYPE 736A, OPTION 1

NO SCALE

RSP B11-56

NOTES:

1. Avoid existing reinforcement when drilling.
2. Dimensions may vary with roadway cross slope and with certain thickness of surfacing.
3. Clearance to reinforcing steel in barrier to be 1", except as noted. Longitudinal reinforcement to stop at all expansion joints.
4. For typical metal railing connection details not shown, see Revised Standard Plans A77U1 and A77U2.
5. Roughen existing bridge deck surface with ¼" amplitude before casting new concrete against existing concrete.
6. All reinforcement within new barrier shall be epoxy coated.
7. Modification in Chain Link Railing limited to railing height only. For other details not shown, see Standard Plan B11-52.

NOTE:
THE CONTRACTOR SHALL VERIFY ALL CONTROLLING FIELD DIMENSIONS BEFORE ORDERING OR FABRICATING ANY MATERIAL.

| | BY | CHECKED |
|---|---|---|
| DESIGN | Mario Guadamuz | Keith Stilmunkes |
| DETAILS | Bruno Jenko | Keith Stilmunkes |
| QUANTITIES | Tracy Sanderson | Jon Szabo |

STATE OF CALIFORNIA
DEPARTMENT OF TRANSPORTATION

DIVISION OF ENGINEERING SERVICES
STRUCTURE DESIGN
DESIGN BRANCH 7

BRIDGE NO. 12-0138
POST MILE 26.81

# PENTZ OVERHEAD (RETROFIT)
# CONCRETE BARRIER TYPE 736 MOD

STRUCTURES DESIGN DETAIL SHEET (ENGLISH) (REV. 09-01-10)

ORIGINAL SCALE IN INCHES FOR REDUCED PLANS 0 1 2 3

UNIT: 3592
PROJECT NUMBER & PHASE: 0300000474 1
CONTRACT NO.: 03-3E1201

DISREGARD PRINTS BEARING EARLIER REVISION DATES

REVISION DATES 11-6-13 1-15-14

SHEET 11 OF 11

FILE => 12-0138-k-conc barrier.dgn

USERNAME => s119538 DATE PLOTTED => 06-MAY-2014 TIME PLOTTED => 09:27