Dist	COUNTY	ROUTE	POST MILES TOTAL PROJECT	SHEET No.	TOTAL SHEETS
03	Nev	49	31.3/R32.6	1	15

INDEX OF PLANS

SHEET No.	DESCRIPTION
1	TITLE AND LOCATION MAP
2-3	TYPICAL CROSS SECTIONS
4	LAYOUT
5	PROFILES
6	SUPERELEVATION DIAGRAM
7-8	CONSTRUCTION DETAILS
9	CONSTRUCTION AREA SIGNS
10-12	SUMMARY OF QUANTITIES
13-15	REVISED STANDARD PLANS

THE STANDARD PLANS LIST APPLICABLE TO THIS CONTRACT IS INCLUDED IN THE NOTICE TO BIDDERS AND SPECIAL PROVISIONS BOOK.

STATE OF CALIFORNIA

DEPARTMENT OF TRANSPORTATION

PROJECT PLANS FOR CONSTRUCTION ON

STATE HIGHWAY

IN NEVADA COUNTY
NEAR NORTH SAN JUAN
FROM 1.3 MILES SOUTH OF THE MIDDLE YUBA RIVER BRIDGE
TO THE MIDDLE YUBA RIVER BRIDGE

TO BE SUPPLEMENTED BY STANDARD PLANS DATED 2010

LOCATION MAP

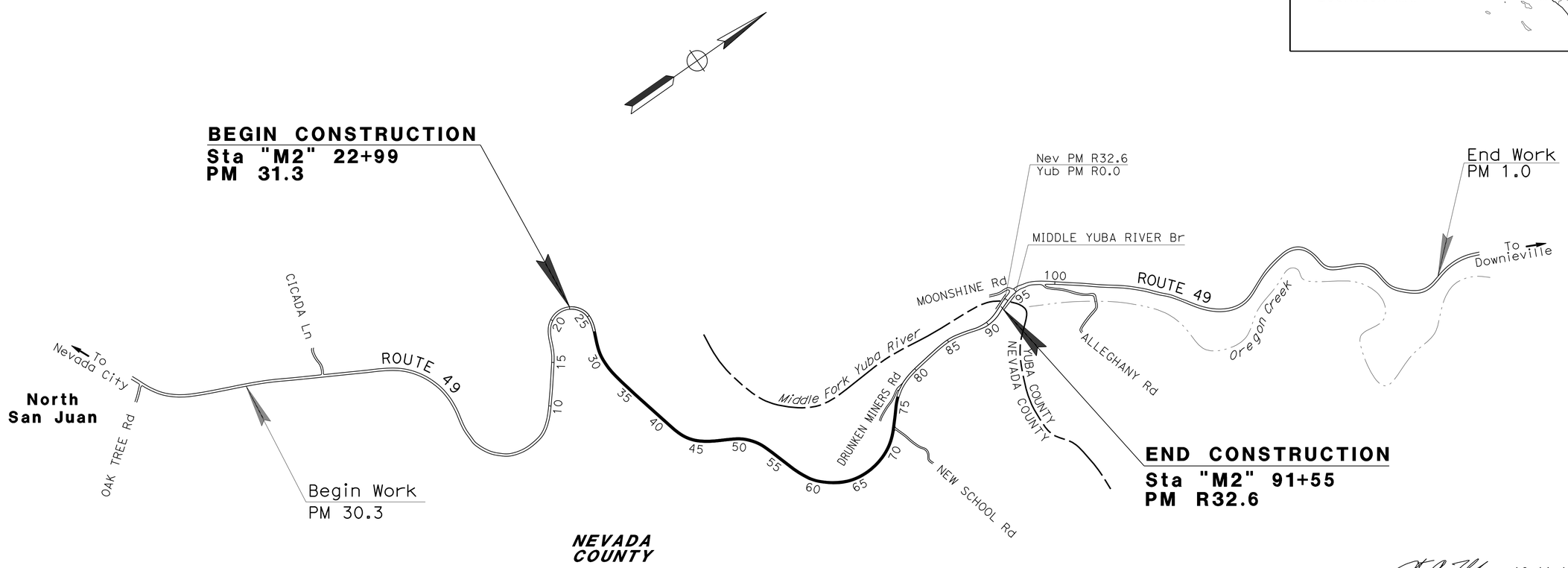

NO SCALE

THE CONTRACTOR SHALL POSSESS THE CLASS (OR CLASSES) OF LICENSE AS SPECIFIED IN THE "NOTICE TO BIDDERS."

PROJECT MANAGER: NADARAJAH SUTHAHAR

DESIGN ENGINEER: NESAR FORMOLI

10-11-12
PROJECT ENGINEER REGISTERED CIVIL ENGINEER — DATE

October 15, 2012
PLANS APPROVAL DATE

REGISTERED PROFESSIONAL ENGINEER — JUSTIN A. UNCK — No. 65889 — Exp. 12/31/13 — CIVIL — STATE OF CALIFORNIA

THE STATE OF CALIFORNIA OR ITS OFFICERS OR AGENTS SHALL NOT BE RESPONSIBLE FOR THE ACCURACY OR COMPLETENESS OF SCANNED COPIES OF THIS PLAN SHEET.

CONTRACT No.	03-1F6204
PROJECT ID	0300020557

LAST REVISION 00-00-00 — DATE PLOTTED => 11-DEC-2012 TIME PLOTTED => 12:06

Dist	COUNTY	ROUTE	POST MILES TOTAL PROJECT	SHEET No.	TOTAL SHEETS
03	Nev	49	31.3/R32.6	2	15

REGISTERED CIVIL ENGINEER 10-11-12 DATE

10-15-12
PLANS APPROVAL DATE

REGISTERED PROFESSIONAL ENGINEER JUSTIN A. UNCK No. 65889 Exp. 12/31/13 CIVIL STATE OF CALIFORNIA

THE STATE OF CALIFORNIA OR ITS OFFICERS OR AGENTS SHALL NOT BE RESPONSIBLE FOR THE ACCURACY OR COMPLETENESS OF SCANNED COPIES OF THIS PLAN SHEET.

NOTES:

1. DIMENSIONS OF THE PAVEMENT STRUCTURES (STRUCTURAL SECTIONS) ARE SUBJECT TO TOLERANCES SPECIFIED IN THE STANDARD SPECIFICATIONS.
2. SUPERELEVATIONS ARE SHOWN ON THE SUPERELEVATION DIAGRAMS.
3. PLACE 0.1′ HMA (TYPE A) AFTER SHOULDER WIDENING, PAVEMENT RECONSTRUCTION AND REPLACE ASPHALT CONCRETE SURFACING WORK IS COMPLETE.
4. SEE QUANTITY SHEETS FOR LIMITS AND WIDTHS OF REPLACE ASPHALT CONCRETE SURFACING. SEE LAYOUT AND QUANTITY SHEETS FOR LIMITS AND WIDTHS OF PAVEMENT RECONSTRUCTION.
5. SEE LAYOUTS AND QUANTITY SHEETS FOR LOCATION AND TYPES OF HMA DIKE.
6. PLACE SAFETY EDGE WHERE OVERLAY PLUS EXISTING EXPOSED PAVEMENT EDGE THICKNESS IS GREATER THAN 0.15′. SEE STANDARD PLANS FOR DETAILS.
7. DO NOT APPLY CRACK TREATMENT TO PAVEMENT RECONSTRUCTION LOCATIONS. FOR REPLACE AC SURFACING LOCATIONS, COMPLETE CRACK TREATMENT AFTER COLD PLANING AND BEFORE PLACING NEW HMA.
8. SEE LAYOUTS AND CONSTRUCTION DETAILS FOR EXACT UNDERDRAIN LOCATION AND SYSTEM DETAILS.
9. SEE CONSTRUCTION DETAILS AND QUANTITY SHEETS FOR COLD PLANE AC PAVEMENT LIMITS.
10. PROFILE GRADE IS ON TOP OF STRUCTURAL SECTION [B] SEE PROFILE SHEET FOR PROFILE CORRECTION LOCATIONS.

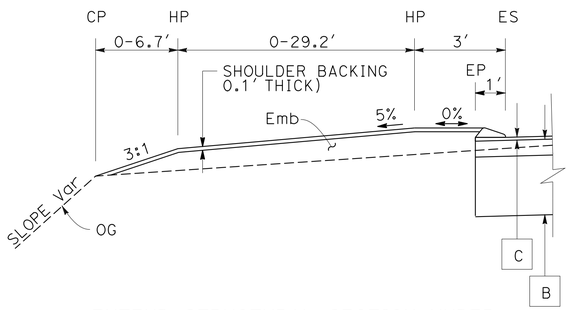

EXTEND STRUCTURAL SECTION UNDER HMA DIKE AT PULLOUTS
"M2" Sta 30+50 TO 35+00
"M2" Sta 39+30.59 TO 42+00

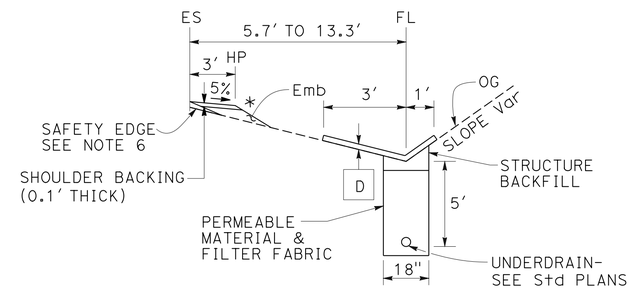

UNDERDRAIN AND PAVED DITCH DETAIL - SEE NOTE 8
"M2" Sta 29+02 TO 30+57
"M2" Sta 32+16 TO 33+52

DESIGN DESIGNATION:

ADT (2013)	1710	D	65%
ADT (2033)	2140	T	5.0%
DHV	280	V	55 MPH
ESAL	216,100	TI_{20}	7.5

CLIMATE REGION - LOW MOUNTAIN

LEGEND:

HMA DIKE - SEE NOTE 5

TYPICAL PAVEMENT STRUCTURE SECTIONS

- [A] 0.25′ REPLACE ASPHALT CONCRETE SURFACING- SEE NOTE 4
- [B] WIDEN SHOULDER AND PAVEMENT RECONSTRUCTION 0.35′ HMA (TYPE A) 1.10′ CLASS 2 AB
- [C] 0.1′ HMA (TYPE A) - SEE NOTE 3
- [D] PAVED DITCH 0.25′ HMA (TYPE A)
- [E] EXISTING 0.41′ AC 0.75′-1.25′ AB
- [F] EXISTING UNLINED DITCH OR 0.17′ AC

* 4:1 OR FLATTER, WHERE SPACE PERMITS.
** MATCH ADJACENT LANE SUPERELEVATION.
# NO SHOULDER WIDENING Sta 26+86 TO 27+46 AND Sta 46+56 TO 47+16.
CORRECT SUPERELEVATION WHERE INDICATED ON SUPERELEVATION DIAGRAM.

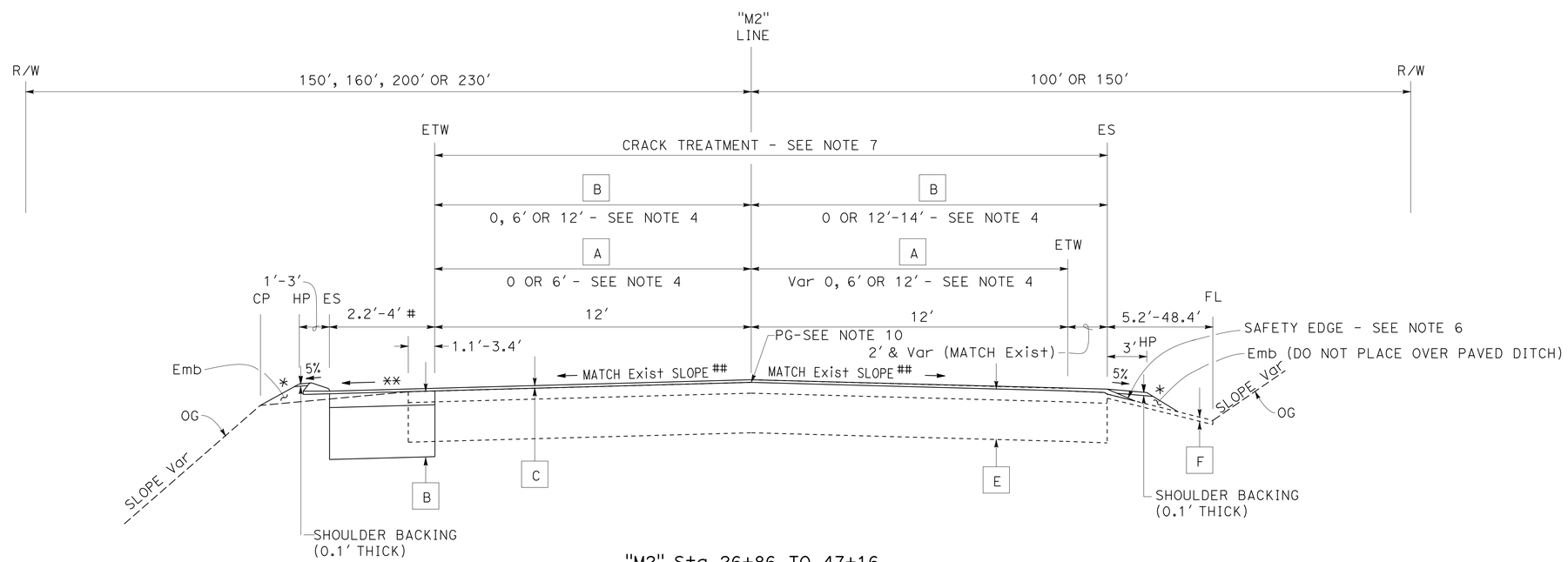

"M2" Sta 26+86 TO 47+16

ROUTE 49

TYPICAL CROSS SECTIONS

NO SCALE

X-1

STATE OF CALIFORNIA - DEPARTMENT OF TRANSPORTATION
Caltrans® DIVISION OF ENGINEERING

FUNCTIONAL SUPERVISOR: NESAR FORMOLI
CALCULATED-DESIGNED BY: JUSTIN UNCK
CHECKED BY: JERRY CAGLE
REVISED BY
DATE REVISED

LAST REVISION 00-00-00
DATE PLOTTED => 11-DEC-2012
TIME PLOTTED => 12:06

Dist	COUNTY	ROUTE	POST MILES TOTAL PROJECT	SHEET No.	TOTAL SHEETS
03	Nev	49	31.3/R32.6	3	15

REGISTERED CIVIL ENGINEER 10-11-12 DATE

10-15-12
PLANS APPROVAL DATE

REGISTERED PROFESSIONAL ENGINEER JUSTIN A. UNCK No. 65889 Exp. 12/31/13 CIVIL STATE OF CALIFORNIA

THE STATE OF CALIFORNIA OR ITS OFFICERS OR AGENTS SHALL NOT BE RESPONSIBLE FOR THE ACCURACY OR COMPLETENESS OF SCANNED COPIES OF THIS PLAN SHEET.

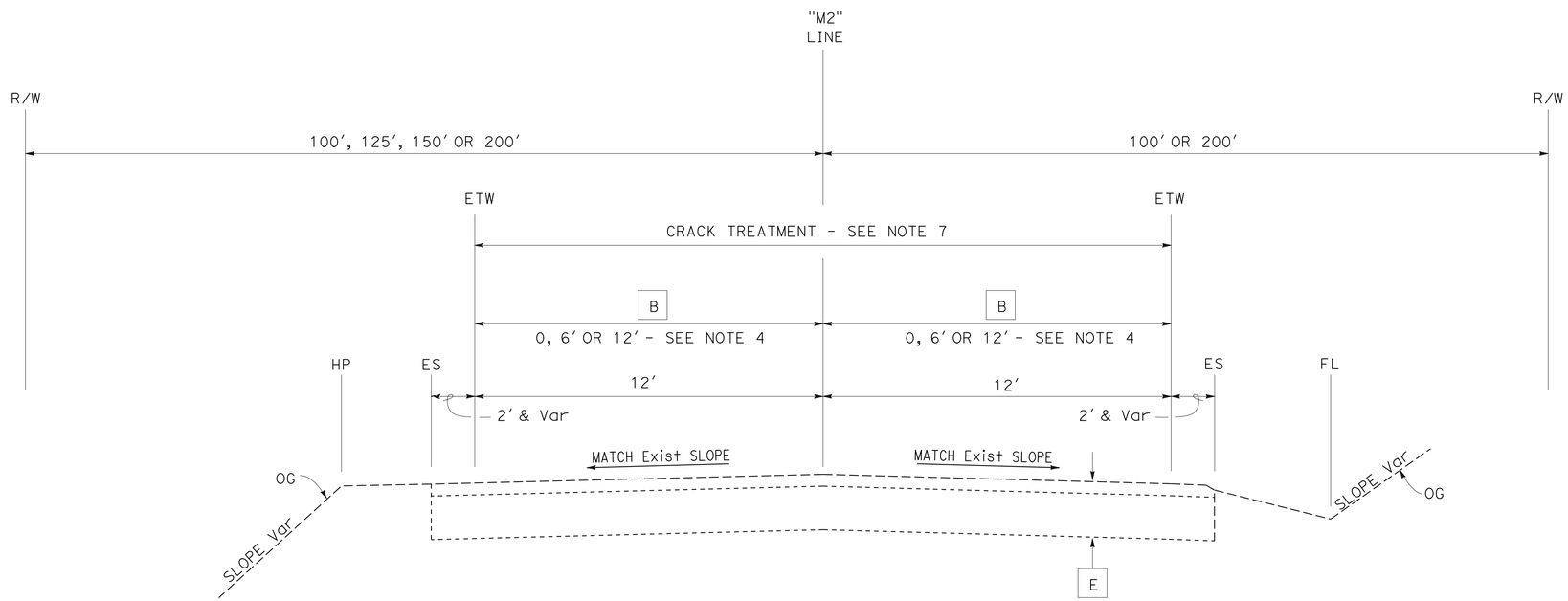

"M2" Sta 47+16 TO 76+45

ROUTE 49

TYPICAL CROSS SECTIONS

NO SCALE

X-2

STATE OF CALIFORNIA - DEPARTMENT OF TRANSPORTATION
Caltrans® DIVISION OF ENGINEERING

FUNCTIONAL SUPERVISOR: NESAR FORMOLI
CALCULATED-DESIGNED BY: JUSTIN UNCK
CHECKED BY: JERRY CAGLE
REVISED BY
DATE REVISED

LAST REVISION 00-00-00
DATE PLOTTED => 11-DEC-2012
TIME PLOTTED => 12:06

Dist	COUNTY	ROUTE	POST MILES TOTAL PROJECT	SHEET No.	TOTAL SHEETS
03	Nev	49	31.3/R32.6	4	15

REGISTERED CIVIL ENGINEER 10-11-12 DATE

10-15-12
PLANS APPROVAL DATE

REGISTERED PROFESSIONAL ENGINEER JUSTIN A. UNCK No. 65889 Exp. 12/31/13 CIVIL STATE OF CALIFORNIA

THE STATE OF CALIFORNIA OR ITS OFFICERS OR AGENTS SHALL NOT BE RESPONSIBLE FOR THE ACCURACY OR COMPLETENESS OF SCANNED COPIES OF THIS PLAN SHEET.

NOTES:

1. FOR ACCURATE RIGHT OF WAY, CONTACT RIGHT OF WAY ENGINEERING AT THE DISTRICT OFFICE.
2. SEE QUANTITY SHEETS FOR LOCATIONS OF REPLACE AC SURFACING.
3. SEE TYPICAL SECTIONS AND QUANTITY SHEETS FOR ADDITIONAL PAVEMENT RECONSTRUCTION LOCATIONS AND INFORMATION.

LEGEND:

- CONFORM TAPER - COLD PLANE HMA PAVEMENT (DEPTH 0-0.1′) SEE CONSTRUCTION DETAILS
- STRUCTURAL SECTION [B] - WIDEN SHOULDER AND PAVEMENT RECONSTRUCTION
- (X) DRAINAGE SYSTEM - SEE QUANTITY SHEETS AND CONSTRUCTION DETAILS FOR MORE INFORMATION
- HMA OVERSIDE DRAIN OR INLET TAPER
- [X] STRUCTURAL SECTION - SEE TYPICAL CROSS SECTIONS

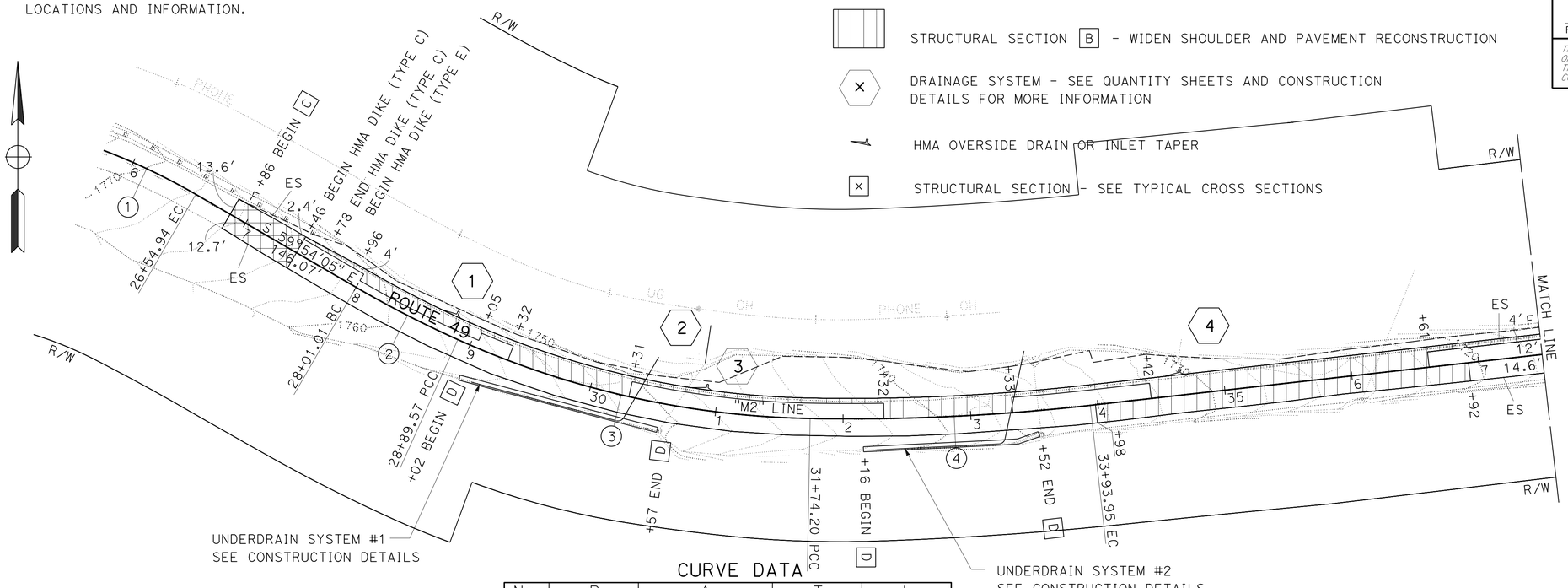

CURVE DATA

No.	R	Δ	T	L
1	495.35′	11°34′49"	50.23′	100.12′
2	857.39′	5°55′05"	44.32′	88.56′
3	705.16′	23°7′36"	144.28′	284.63′
4	1684.33′	7°28′30"	110.03′	219.75′
5	2349.07′	3°16′30"	67.15′	134.27′
6	481.08′	26°2′04"	111.22′	218.60′
7	552.69′	15°40′43"	76.10′	151.24′
8	1508.80′	5°32′49"	73.09′	146.07′
9	2954.61′	3°13′14"	83.06′	166.07′

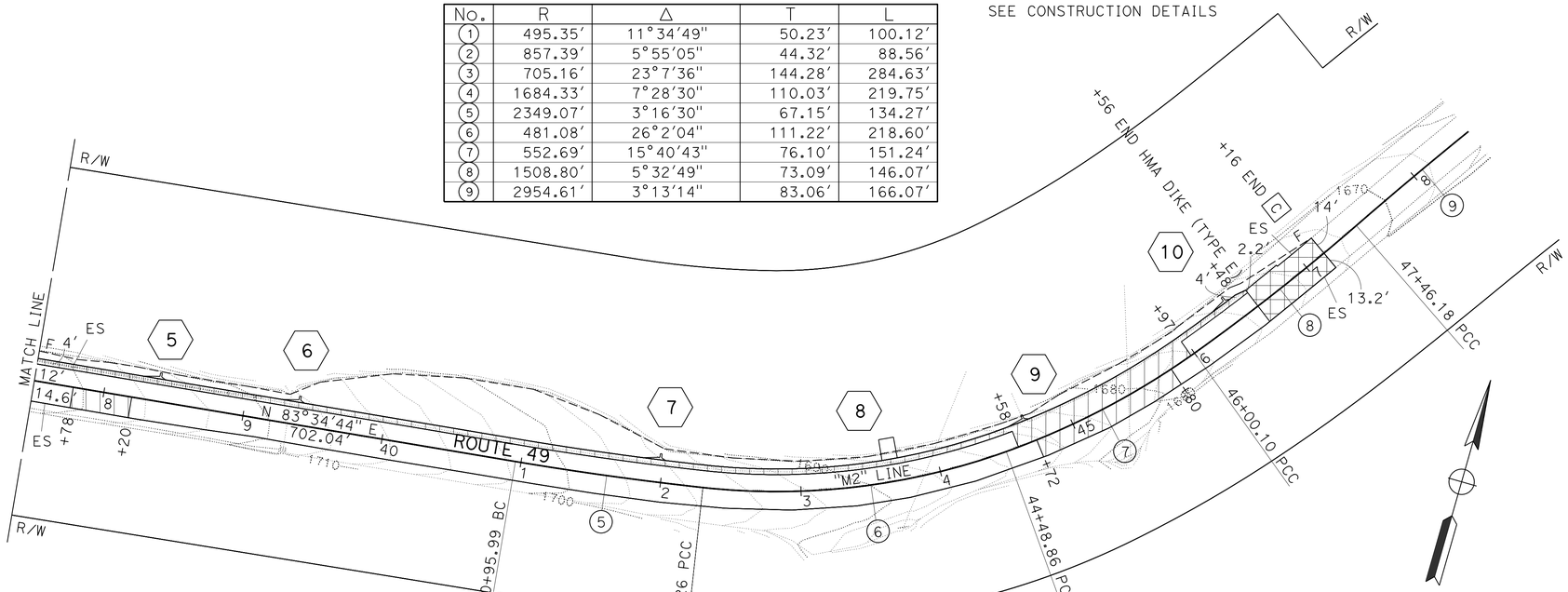

LAYOUT

SCALE: 1" = 50′

L-1

STATE OF CALIFORNIA - DEPARTMENT OF TRANSPORTATION
Caltrans® DIVISION OF ENGINEERING

FUNCTIONAL SUPERVISOR: NESAR FORMOLI
CALCULATED-DESIGNED BY: JUSTIN UNCK
CHECKED BY: JERRY CAGLE
REVISED BY / DATE REVISED

LAST REVISION 00-00-00 | DATE PLOTTED => 11-DEC-2012 | TIME PLOTTED => 12:06

Dist	COUNTY	ROUTE	POST MILES TOTAL PROJECT	SHEET No.	TOTAL SHEETS
03	Nev	49	31.3/R32.6	5	15

REGISTERED CIVIL ENGINEER 10-11-12 DATE

10-15-12
PLANS APPROVAL DATE

REGISTERED PROFESSIONAL ENGINEER JUSTIN A. UNCK No. 65889 Exp. 12/31/13 CIVIL STATE OF CALIFORNIA

THE STATE OF CALIFORNIA OR ITS OFFICERS OR AGENTS SHALL NOT BE RESPONSIBLE FOR THE ACCURACY OR COMPLETENESS OF SCANNED COPIES OF THIS PLAN SHEET.

NOTES: 1. ALL ELEVATIONS ARE BASED ON NGVD 1929.
2. PG IS LOCATED ON THE TOP OF STRUCTURAL SECTION B. SEE TYPICAL CROSS SECTIONS.

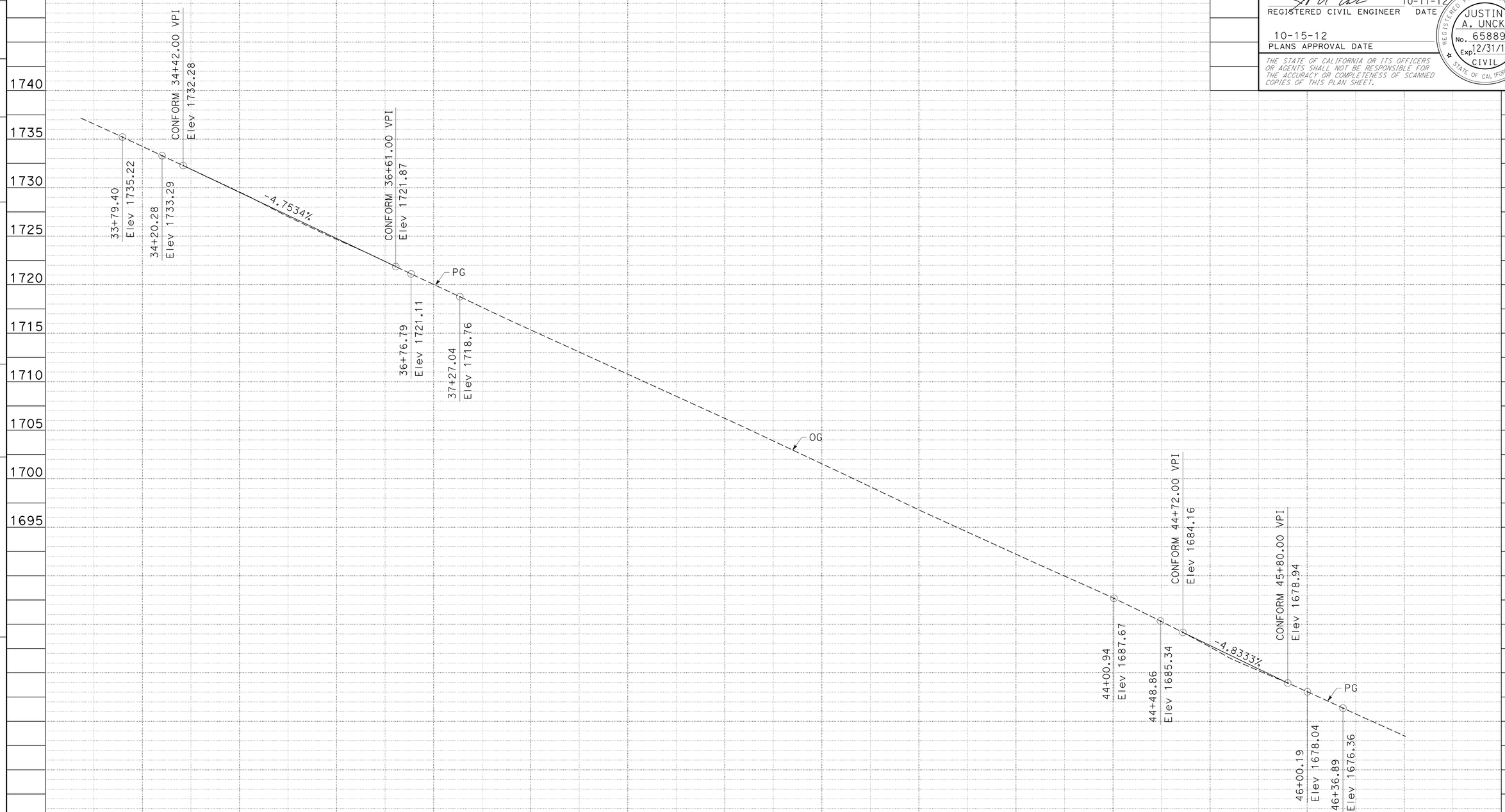

"M2" LINE
ROUTE 49

PROFILE
SCALE: Horiz 1"=50
Vert 1"=5'

P-1

STATION	4	35+00	6	7	8	9	40+00	1	2	3	4	45+00	6	7	TOTAL
CY Exc															
CY Emb															

STATE OF CALIFORNIA - DEPARTMENT OF TRANSPORTATION
Caltrans® DIVISION OF ENGINEERING

FUNCTIONAL SUPERVISOR: NESAR FORMOLI
CALCULATED-DESIGNED BY: JUSTIN UNCK
CHECKED BY: JERRY CAGLE
REVISED BY
DATE REVISED

LAST REVISION 00-00-00
DATE PLOTTED => 11-DEC-2012
TIME PLOTTED => 12:06

Dist	COUNTY	ROUTE	POST MILES TOTAL PROJECT	SHEET No.	TOTAL SHEETS
03	Nev	49	31.3/R32.6	6	15

REGISTERED CIVIL ENGINEER 10-11-12 DATE

10-15-12
PLANS APPROVAL DATE

REGISTERED PROFESSIONAL ENGINEER JUSTIN A. UNCK No. 65889 Exp. 12/31/13 CIVIL STATE OF CALIFORNIA

THE STATE OF CALIFORNIA OR ITS OFFICERS OR AGENTS SHALL NOT BE RESPONSIBLE FOR THE ACCURACY OR COMPLETENESS OF SCANNED COPIES OF THIS PLAN SHEET.

NOTES: 1. SEE LAYOUTS FOR CURVE DATA.

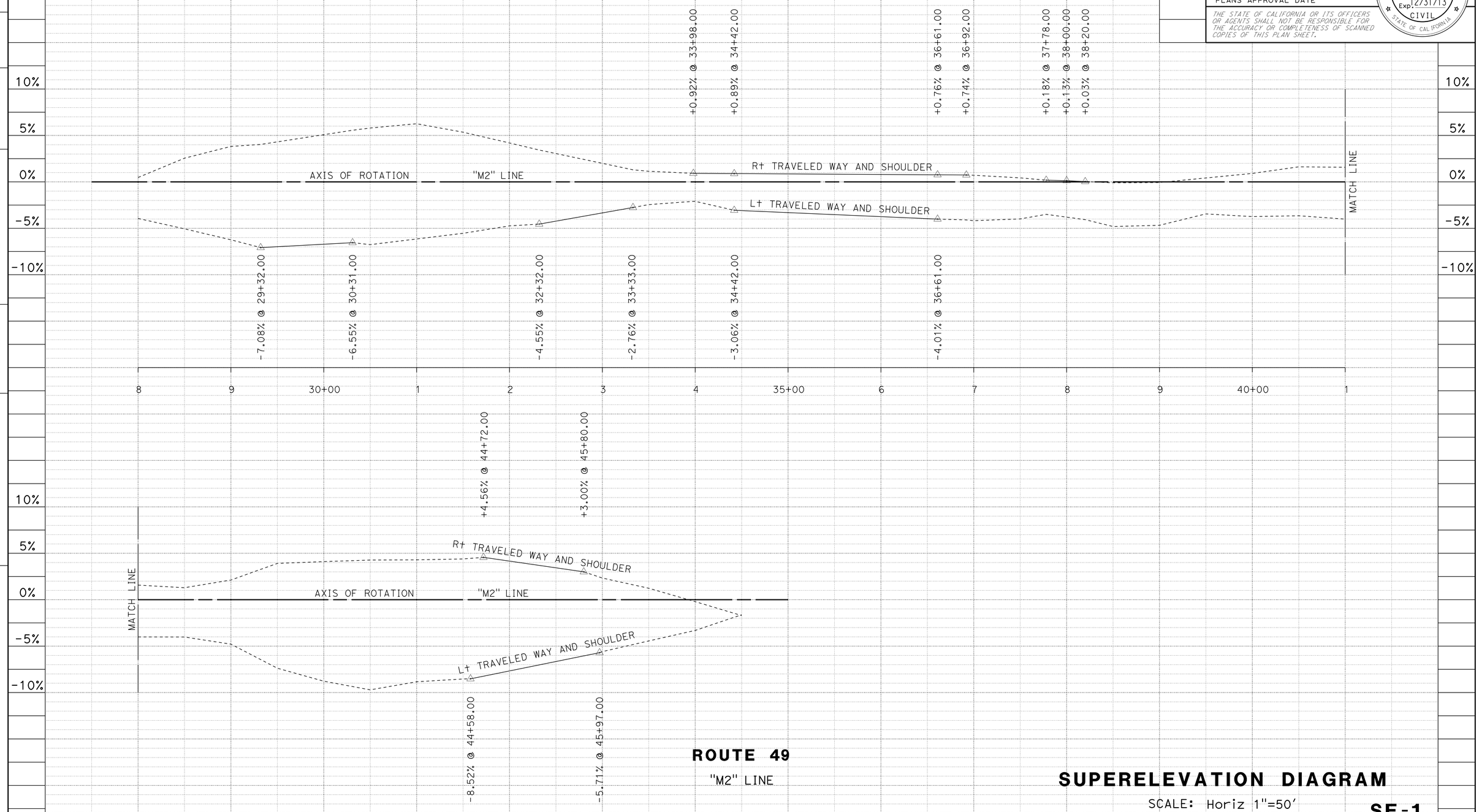

ROUTE 49

"M2" LINE

SUPERELEVATION DIAGRAM

SCALE: Horiz 1"=50'

SE-1

STATE OF CALIFORNIA - DEPARTMENT OF TRANSPORTATION
Caltrans® DIVISION OF ENGINEERING

FUNCTIONAL SUPERVISOR: NESAR FORMOLI
CALCULATED-DESIGNED BY: JUSTIN UNCK
CHECKED BY: JERRY CAGLE
REVISED BY / DATE REVISED

LAST REVISION 00-00-00
DATE PLOTTED => 11-DEC-2012
TIME PLOTTED => 12:06

Dist	COUNTY	ROUTE	POST MILES TOTAL PROJECT	SHEET No.	TOTAL SHEETS
03	Nev	49	31.3/R32.6	7	15

REGISTERED CIVIL ENGINEER 10-11-12 DATE

10-15-12
PLANS APPROVAL DATE

REGISTERED PROFESSIONAL ENGINEER JUSTIN A. UNCK No. 65889 Exp. 12/31/13 CIVIL STATE OF CALIFORNIA

THE STATE OF CALIFORNIA OR ITS OFFICERS OR AGENTS SHALL NOT BE RESPONSIBLE FOR THE ACCURACY OR COMPLETENESS OF SCANNED COPIES OF THIS PLAN SHEET.

NOTES:

1. SEE STANDARD PLAN SHEETS FOR HMA OVERSIDE DRAIN AND PIPE DOWNDRAIN DETAILS NOT SHOWN HERE.

LEGEND:

(X) DRAINAGE SYSTEM

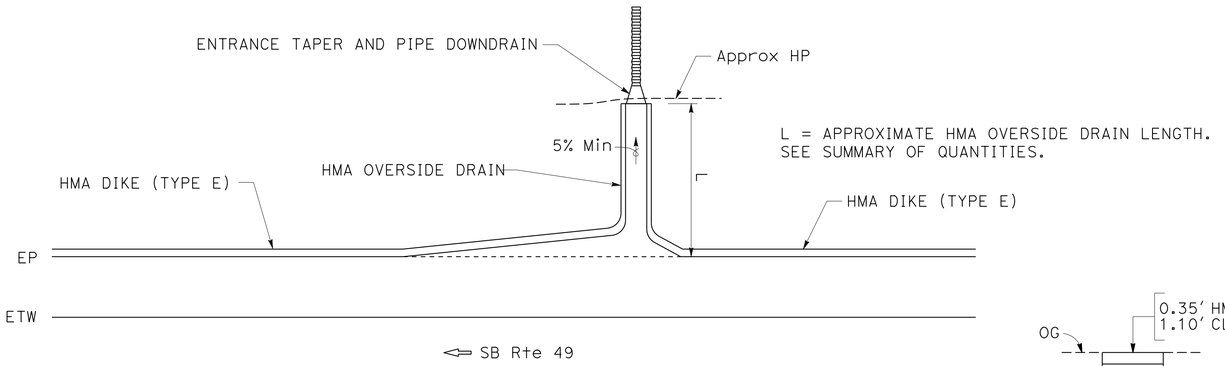

HMA OVERSIDE DRAIN DETAIL (TYPICAL)

(3) (4) (6) (7) (10)

Sta 30+91 Sta 41+98
Sta 34+66 Sta 46+39
Sta 39+38

SLOPE HMA OVERSIDE DRAIN AT 5% MINIMUM.
GRADE AS NEEDED TO MAINTAIN MINIMUM SLOPE.
ADJUST "L" AS REQUIRED TO FIT FIELD CONDITIONS.

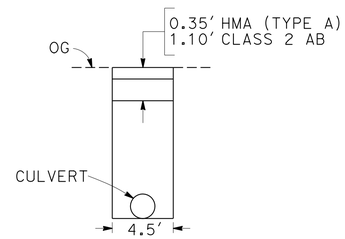

SECTION VIEW

STRUCTURAL SECTION OVER CULVERT BACKFILL DETAIL (TYPICAL)

UNDERDRAIN SYSTEM #1
UNDERDRAIN SYSTEM #2

SEE STANDARD PLANS AND SPECIFICATIONS
FOR DETAILS NOT SHOWN

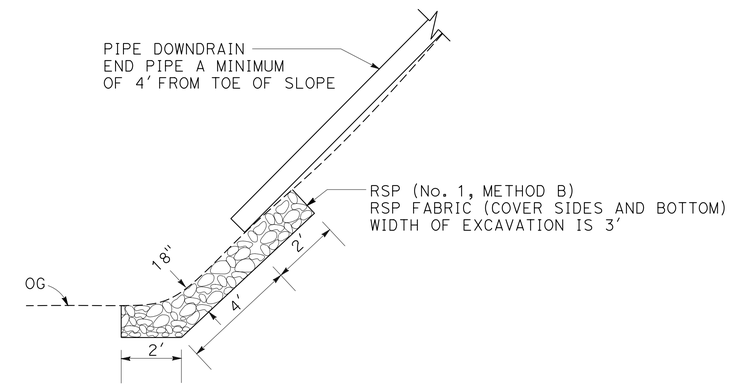

PIPE DOWNDRAIN AND RSP DETAILS (TYPICAL)

(1) (4) (5) (6) (7) (9) (10)

Sta 28+81 Sta 39+38
Sta 34+66 Sta 41+98
Sta 38+38 Sta 44+68
Sta 46+39

EXACT DIMENSIONS TO BE DETERMINED IN THE FIELD
AND APPROVED BY THE ENGINEER.

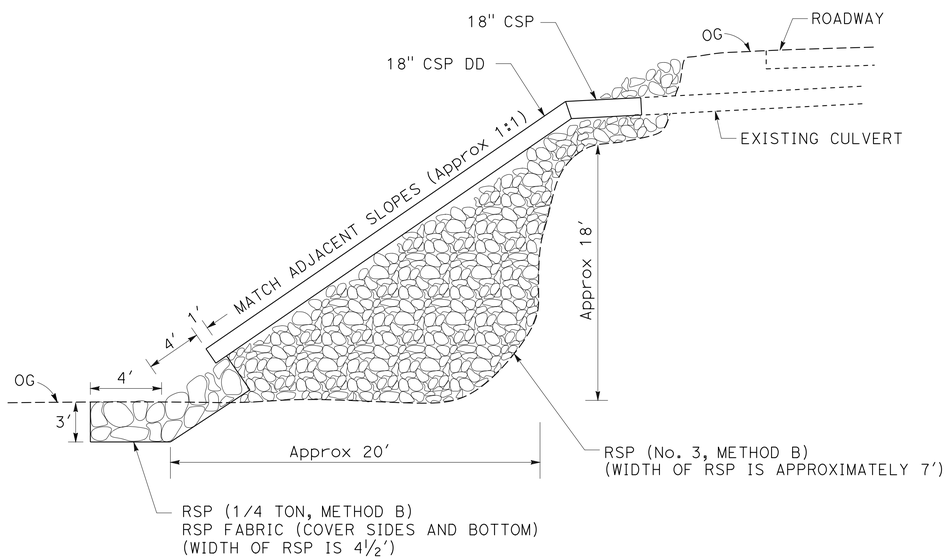

RSP AND DOWNDRAIN AT ERODED CULVERT OUTLET

(2) Sta 30+87

EXACT DIMENSIONS TO BE DETERMINED IN THE FIELD
AND APPROVED BY THE ENGINEER.

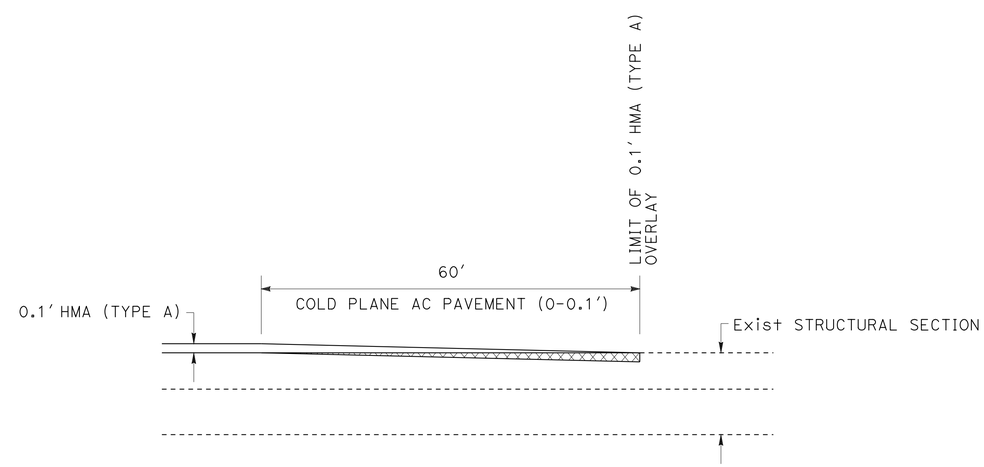

CONFORM TAPER (TYPICAL)

Sta 26+86 TO 27+46
Sta 46+56 TO 47+16

CONSTRUCTION DETAILS

NO SCALE

C-1

STATE OF CALIFORNIA - DEPARTMENT OF TRANSPORTATION
Caltrans DIVISION OF ENGINEERING

FUNCTIONAL SUPERVISOR: NESAR FORMOLI
CALCULATED-DESIGNED BY: JUSTIN UNCK
CHECKED BY: JERRY CAGLE
REVISED BY
DATE REVISED

LAST REVISION 00-00-00
DATE PLOTTED => 11-DEC-2012
TIME PLOTTED => 12:06

Dist	COUNTY	ROUTE	POST MILES TOTAL PROJECT	SHEET No.	TOTAL SHEETS
03	Nev	49	31.3/R32.6	8	15

REGISTERED CIVIL ENGINEER 10-11-12 DATE

10-15-12
PLANS APPROVAL DATE

REGISTERED PROFESSIONAL ENGINEER JUSTIN A. UNCK No. 65889 Exp. 12/31/13 CIVIL STATE OF CALIFORNIA

THE STATE OF CALIFORNIA OR ITS OFFICERS OR AGENTS SHALL NOT BE RESPONSIBLE FOR THE ACCURACY OR COMPLETENESS OF SCANNED COPIES OF THIS PLAN SHEET.

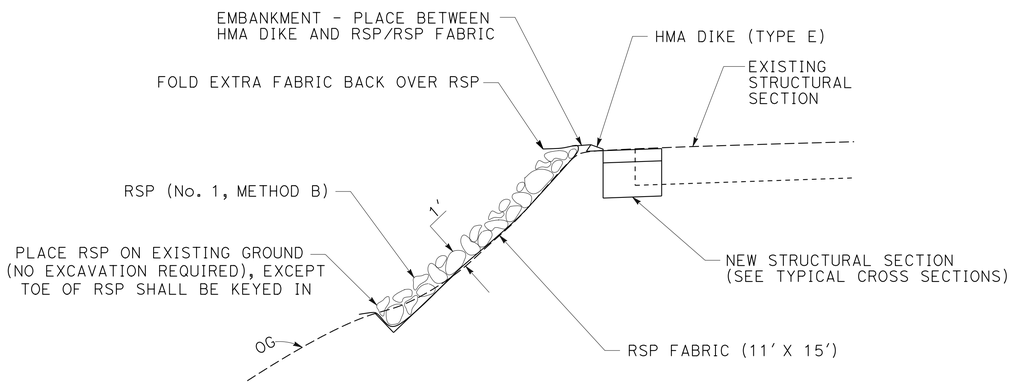

SECTION A-A

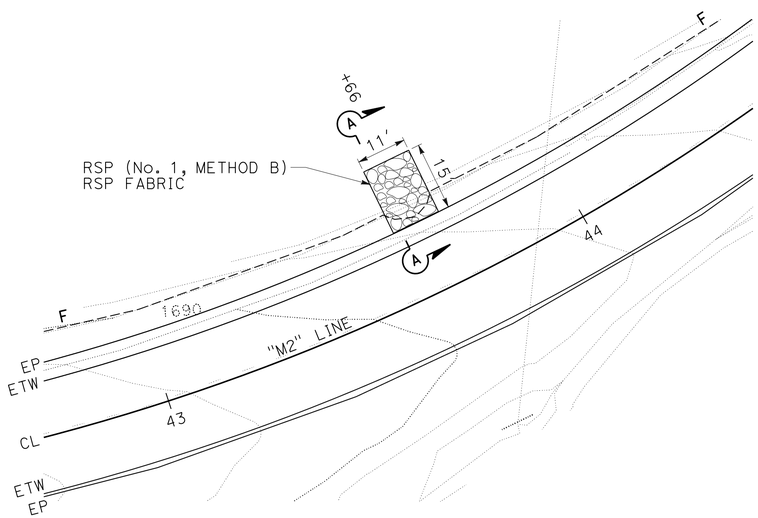

PLAN VIEW

RSP AT ERODED EMBANKMENT

(8) Sta 43+66

EXACT DIMENSIONS TO BE DETERMINED IN THE FIELD AND APPROVED BY THE ENGINEER.

UNDERDRAIN DATA

UNDERDRAIN SYSTEM #1

LOCATION	"M2" STATION	OFFSET	ORIGINAL GROUND ELEVATION	PIPE FLOW LINE ELEVATION	DESCRIPTION
-	-	-	-	-	TERMINAL RISER
A	29+12.1	26.4' Rt	1755.1'	1750.1'	BEGIN 6" ALTERNATIVE PIPE UNDERDRAIN
B	30+25.3	20.5' Rt	1750.5'	1745.5'	AT WYE INLET WITH TERMINAL RISER
-	-	-	-	-	END 6" Alt PIPE UNDERDRAIN; BEGIN 6" Alt PIPE CULVERT
C	30+31.6	13.8' Rt	1751.8'	1745.3'	AT ETW
D	30+41.0	16.0' Lt	1749.5'	1744.7'	AT ETW
E	30+47.8	35.2' Lt	-	1744.3'	END 6" ALTERNATIVE PIPE CULVERT

UNDERDRAIN SYSTEM #2

LOCATION	"M2" STATION	OFFSET	ORIGINAL GROUND ELEVATION	PIPE FLOW LINE ELEVATION	DESCRIPTION
-	-	-	-	-	TERMINAL RISER
A	32+25.7	24.4' Rt	1741.2'	1736.2'	BEGIN 6" ALTERNATIVE PIPE UNDERDRAIN
B	33+20.6	23.6' Rt	1736.5'	1731.5'	AT WYE INLET WITH TERMINAL RISER
-	-	-	-	-	END 6" Alt PIPE UNDERDRAIN; BEGIN 6" Alt PIPE CULVERT
C	33+27.3	13.4' Rt	1737.8'	1731.3'	AT ETW
D	33+36.0	16.0' Lt	1736.7'	1730.6'	AT ETW
E	33+45.7	47.5' Lt	-	1730.0'	END 6" ALTERNATIVE PIPE CULVERT

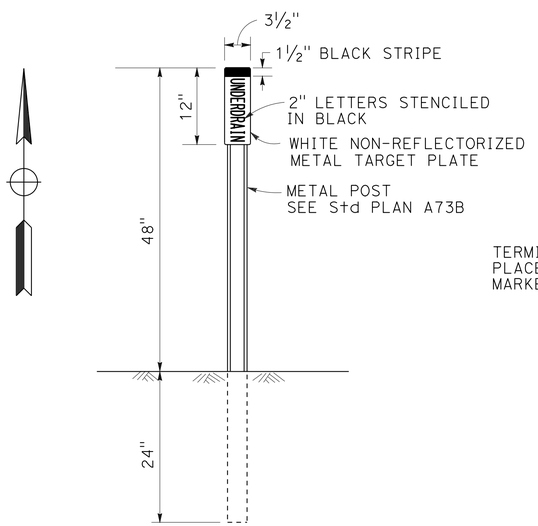

UNDERDRAIN MARKER

EXACT PLACEMENT LOCATION TO BE DETERMINED BY THE ENGINEER.

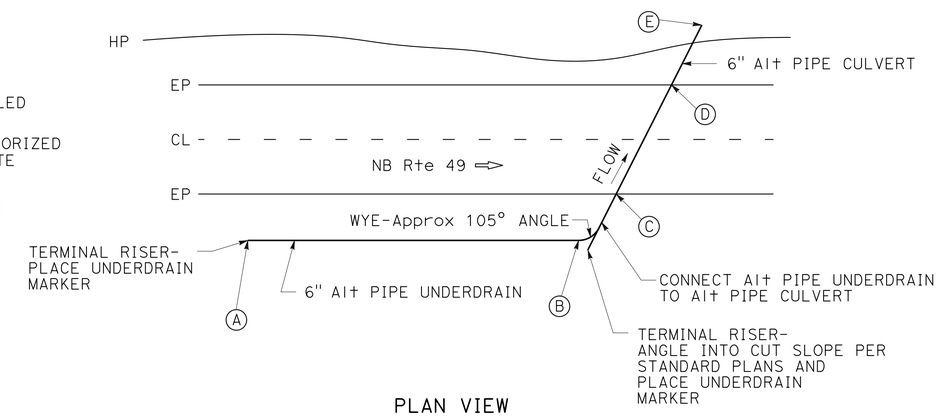

PLAN VIEW

UNDERDRAIN LAYOUT (TYPICAL)

DITCH PAVING NOT SHOWN
SEE LAYOUTS AND TYPICAL FOR DETAILS

CONSTRUCTION DETAILS

NO SCALE

C-2

STATE OF CALIFORNIA - DEPARTMENT OF TRANSPORTATION
Caltrans® DIVISION OF ENGINEERING

FUNCTIONAL SUPERVISOR: NESAR FORMOLI
CALCULATED-DESIGNED BY: JUSTIN UNCK
CHECKED BY: JERRY CAGLE
REVISED BY
DATE REVISED

LAST REVISION 00-00-00
DATE PLOTTED => 11-DEC-2012
TIME PLOTTED => 12:06

Dist	COUNTY	ROUTE	POST MILES TOTAL PROJECT	SHEET No.	TOTAL SHEETS
03	Nev	49	31.3/R32.6	9	15

REGISTERED CIVIL ENGINEER 10-11-12 DATE

10-15-12
PLANS APPROVAL DATE

REGISTERED PROFESSIONAL ENGINEER JUSTIN A. UNCK No. 65889 Exp. 12/31/13 CIVIL STATE OF CALIFORNIA

THE STATE OF CALIFORNIA OR ITS OFFICERS OR AGENTS SHALL NOT BE RESPONSIBLE FOR THE ACCURACY OR COMPLETENESS OF SCANNED COPIES OF THIS PLAN SHEET.

CONSTRUCTION AREA SIGNS (STATIONARY MOUNTED)

SIGN LETTER	SIGN CODE FEDERAL	SIGN CODE CALIFORNIA	PANEL SIZE	SIGN MESSAGE	No. AND SIZE OF POST(S)	No. OF SIGNS
A	W20-1	C23	48" X 48"	ROAD WORK AHEAD	1 - 6" X 6"	3
B		C40(Mod)	48" X 36"	TRAFFIC FINES DOUBLED IN WORK ZONES	1 - 4" X 6"	2
C	G20-2	C14	36" X 18"	END ROAD WORK	1 - 4" X 4"	3

NOTE: EXACT SIGN LOCATIONS TO BE DETERMINED BY THE ENGINEER.

C40 (Mod) (CA)

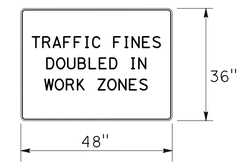

4" D SERIES LETTERS.
RETROREFLECTIVE WHITE BACKGROUND
WITH BLACK LEGEND AND BORDER.

SIGN LETTER (B) DETAILS

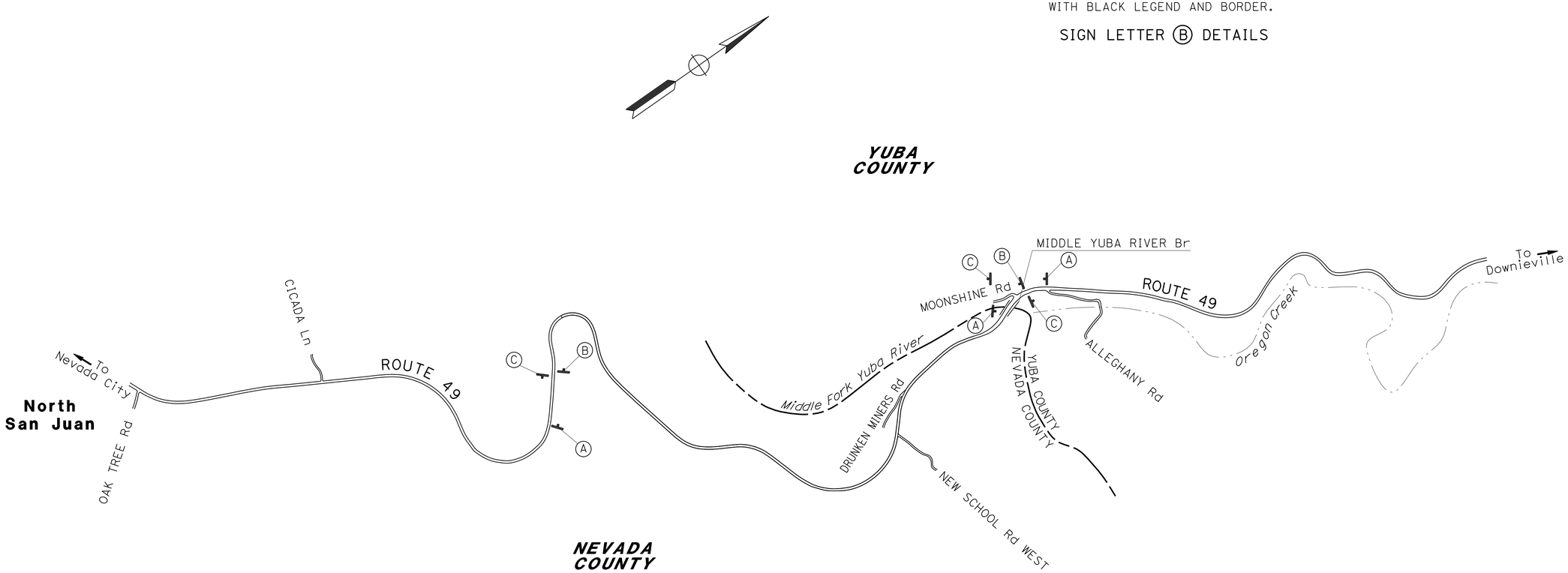

CONSTRUCTION AREA SIGNS

NO SCALE

CS-1

APPROVED FOR CONSTRUCTION AREA SIGN WORK ONLY

STATE OF CALIFORNIA - DEPARTMENT OF TRANSPORTATION
Caltrans® DIVISION OF ENGINEERING

FUNCTIONAL SUPERVISOR: NESAR FORMOLI
CALCULATED-DESIGNED BY: JUSTIN UNCK
CHECKED BY: JOHN KEBER
REVISED BY
DATE REVISED

LAST REVISION 00-00-00
DATE PLOTTED => 11-DEC-2012
TIME PLOTTED => 12:06

Dist	COUNTY	ROUTE	POST MILES TOTAL PROJECT	SHEET No.	TOTAL SHEETS
03	Nev	49	31.3/R32.6	10	15

REGISTERED CIVIL ENGINEER 10-11-12 DATE

10-15-12
PLANS APPROVAL DATE

REGISTERED PROFESSIONAL ENGINEER JUSTIN A. UNCK No. 65889 Exp. 12/31/13 CIVIL STATE OF CALIFORNIA

THE STATE OF CALIFORNIA OR ITS OFFICERS OR AGENTS SHALL NOT BE RESPONSIBLE FOR THE ACCURACY OR COMPLETENESS OF SCANNED COPIES OF THIS PLAN SHEET.

NOTES:

1. EXACT LOCATIONS OF WORK TO BE DETERMINED BY THE ENGINEER.

CRACK TREATMENT

LOCATION	"M2" Sta		CRACK TREATMENT	NOTES
L+/R+	FROM	TO	LNMI	
L+/R+	26+86	76+45	1.9	TREAT LANES AND SHOULDERS. FOR REPLACE HMA SURFACING LOCATIONS, COMPLETE CRACK TREATMENT AFTER COLD PLANING AND BEFORE PLACING NEW HMA.
TOTAL			1.9	

HMA DIKE

LOCATION	"M2" Sta		PLACE HMA DIKE TYPE C	PLACE HMA DIKE TYPE E	HMA (TYPE A)	NOTES
L+/R+	FROM	TO	LF	LF	TON	
L+	27+46	27+78	32		0.2	IN FRONT OF MBGR
L+	27+78	46+56		1,878	47.8	
	SUBTOTAL				48.0	
	TOTAL		32	1,878	#	

SEE ROADWAY QUANTITIES TABLE FOR FOR TOTALS NOT GIVEN THIS SHEET.

DRAINAGE

DRAINAGE SYSTEM No.	LOCATION	APPROXIMATE "M2" Sta	DESCRIPTION	REMOVE DOWNDRAIN	12" ENTRANCE TAPER	18" CORRUGATED STEEL PIPE (.109" THICK)	CORRUGATED STEEL PIPE DOWNDRAIN * 12"	CORRUGATED STEEL PIPE DOWNDRAIN * 18"	ANCHOR ASSEMBLY 12"	ANCHOR ASSEMBLY 18"	PLACE HMA (Misc AREA)	HMA (TYPE A)	HMA OVERSIDE DRAIN LENGTH (L) (FROM EP TO END)	(N) RSP (No. 3, METHOD B)	RSP (No. 1, METHOD B)	RSP (1/4 TON, METHOD B)	(N) RSP FABRIC	NOTES
	L+/R+			EA	EA	LF	LF	LF	EA	EA	SQYD	TON	LF	TON	CY	CY	SQYD	
1	L+	28+81	PIPE DOWNDRAIN, RSP		1		35		2		1.94	0.32			1.33		6.33	
2	L+	30+87	ERODED CULVERT OUTLET			6		40		2				75.6		4.5	12.0	SEE CONSTRUCTION DETAILS
3	L+	30+91	HMA OSD, PIPE DOWNDRAIN		1		10		1		6.60	1.08	18					THIS SYSTEM DRAINS ONTO RSP PLACED FOR DS #2
4	L+	34+66	HMA OSD, PIPE DOWNDRAIN, RSP	1	1		20		1		3.70	0.60	10		1.33		6.33	REMOVE EXISTING FLUME AND AC OVERSIDE DRAIN
5	LT	38+38	PIPE DOWNDRAIN, RSP		1		20		1		1.94	0.32			1.33		6.33	
6	L+	39+38	HMA OSD, PIPE DOWNDRAIN, RSP		1		40		2		6.20	1.02	17		1.33		6.33	
7	L+	41+98	HMA OSD, PIPE DOWNDRAIN, RSP		1		27		2		2.90	0.48	8		1.33		6.33	
8	L+	43+66	ERODED EMBANKMENT												6.10		19.6	SEE CONSTRUCTION DETAILS ON SHEET C-2
9	L+	44+68	PIPE DOWNDRAIN, RSP	1	1		23		2		1.94	0.32			1.33		6.33	REMOVE EXISTING PIPE DOWNDRAIN
10	L+	46+39	HMA OSD, PIPE DOWNDRAIN, RSP		1		10		1		3.30	0.54	9		1.33		6.33	
											131.10							FROM UNDERDRAINS TABLE ON SHEET Q-3
			SUBTOTAL									4.68						
			TOTAL	2	8	6	185	40	12	2	159.60	#		75.6	15.41	4.5	75.91	

* = 18" CSP DOWNDRAIN IS 0.109" THICK.
# = SEE ROADWAY QUANTITIES TABLE FOR TOTALS NOT GIVEN THIS SHEET.
(N) = NOT A SEPARATE PAY ITEM. FOR INFORMATIONAL PURPOSES ONLY.

SUMMARY OF QUANTITIES

Q-1

STATE OF CALIFORNIA - DEPARTMENT OF TRANSPORTATION
Caltrans® DIVISION OF ENGINEERING

FUNCTIONAL SUPERVISOR: NESAR FORMOLI
CALCULATED-DESIGNED BY: JUSTIN UNCK
CHECKED BY: JERRY CAGLE
REVISED BY / DATE REVISED

LAST REVISION 00-00-00 DATE PLOTTED => 11-DEC-2012 TIME PLOTTED => 12:06

Dist	COUNTY	ROUTE	POST MILES TOTAL PROJECT	SHEET No.	TOTAL SHEETS
03	Nev	49	31.3/R32.6	11	15

REGISTERED CIVIL ENGINEER 10-11-12 DATE

10-15-12
PLANS APPROVAL DATE

REGISTERED PROFESSIONAL ENGINEER JUSTIN A. UNCK No. 65889 Exp. 12/31/13 CIVIL STATE OF CALIFORNIA

THE STATE OF CALIFORNIA OR ITS OFFICERS OR AGENTS SHALL NOT BE RESPONSIBLE FOR THE ACCURACY OR COMPLETENESS OF SCANNED COPIES OF THIS PLAN SHEET.

NOTES:

1. EXACT LOCATIONS OF WORK TO BE DETERMINED BY THE ENGINEER.

(N) = NOT A SEPARATE PAY ITEM. FOR INFORMATIONAL PURPOSES ONLY.

ROADWAY QUANTITIES

LOCATION	APPROXIMATE "M2" Sta		LENGTH	WIDTH	ROADWAY EXCAVATION	(N) EMBANKMENT	SHOULDER BACKING	COLD PLANE AC PAVEMENT	CLASS 2 AB	HMA (TYPE A)	(N) SAFETY EDGE	NOTES
Lt/Rt	FROM	TO	LF	LF	CY	CY	TON	SQYD	CY	TON	LF	
Lt	27+46	27+96	50	2.4-4.0	8.6	3			6.5	4.1		CONFORM SHOULDER WIDENING TO EXISTING PAVEMENT WIDTH
Lt	27+96	46+48	1852	4	397.8	293			301.8	188.0		SHOULDER WIDENING, EMBANKMENT PLACEMENT AND PULLOUT GRADING
Lt	46+48	46+56	8	2.2-4.0	1.3	1			1.0	0.6		CONFORM SHOULDER WIDENING TO EXISTING PAVEMENT WIDTH
Lt	28+00	29+05	105	6	33.8				25.7	16.0		PAVEMENT RECONSTRUCTION (OUTSIDE 6' OF LANE)
Lt	29+32	30+31	99	12	63.8				48.4	30.1		PAVEMENT RECONSTRUCTION
Lt	32+32	33+33	101	12	65.1				49.4	30.8		PAVEMENT RECONSTRUCTION
Lt	34+42	36+61	219	12	141.1				107.1	66.7		PAVEMENT RECONSTRUCTION
Lt	44+58	45+97	139	12	89.6				68.0	42.3		PAVEMENT RECONSTRUCTION
Lt	53+64	54+23	59	12	38.0				28.8	18.0		PAVEMENT RECONSTRUCTION
Lt	56+75	57+30	55	12	35.4				26.9	16.7		PAVEMENT RECONSTRUCTION
Lt	57+66	58+43	77	6	24.8				18.8	11.7		PAVEMENT RECONSTRUCTION (OUTSIDE 6' OF LANE)
Lt	58+86	60+07	121	6	39.0				29.6	18.4		PAVEMENT RECONSTRUCTION (INSIDE 6' OF LANE)
Lt	60+68	60+87	19	12	12.2				9.3	5.8		PAVEMENT RECONSTRUCTION
Lt	60+96	61+17	21	12	13.5				10.3	6.4		PAVEMENT RECONSTRUCTION
Lt	74+79	76+45	166	12	107.0				81.2	50.5		PAVEMENT RECONSTRUCTION
Rt	33+98	36+92	294	13.5-14.3	189.5				143.7	89.5		PAVEMENT RECONSTRUCTION
Rt	37+78	38+20	42	14.7-14.8	27.1				20.5	12.8		PAVEMENT RECONSTRUCTION
Rt	44+72	45+80	108	13.0-13.2	69.6				52.8	32.9		PAVEMENT RECONSTRUCTION
Rt	48+53	51+02	249	6	80.2				60.9	37.9		PAVEMENT RECONSTRUCTION (INSIDE 6' OF LANE)
Rt	58+43	58+49	6	12	3.9				2.9	1.8		PAVEMENT RECONSTRUCTION
Rt	58+72	59+12	40	12	25.8				19.6	12.2		PAVEMENT RECONSTRUCTION
Rt	59+30	59+95	65	6	20.9				15.9	9.9		PAVEMENT RECONSTRUCTION (OUTSIDE 6' OF LANE)
Rt	60+68	60+87	19	12	12.2				9.3	5.8		PAVEMENT RECONSTRUCTION
Rt	60+96	61+17	21	12	13.5				10.3	6.4		PAVEMENT RECONSTRUCTION
Rt	61+73	61+81	8	12	5.2				3.9	2.4		PAVEMENT RECONSTRUCTION
Rt	61+96	62+28	32	6	10.3				7.8	4.9		PAVEMENT RECONSTRUCTION (OUTSIDE 6' OF LANE)
Rt	62+55	62+68	13	12	8.4				6.4	4.0		PAVEMENT RECONSTRUCTION
Rt	62+68	63+10	42	6	13.5				10.3	6.4		PAVEMENT RECONSTRUCTION (OUTSIDE 6' OF LANE)
Rt	65+11	69+38	427	12	275.2				208.8	130.0		PAVEMENT RECONSTRUCTION
Rt	74+79	76+45	166	12	107.0				81.2	50.5		PAVEMENT RECONSTRUCTION
Lt/Rt	26+86	27+46						184.3				COLD PLANE CONFORM FOR HMA OVERLAY
Lt/Rt	46+56	47+16						183.2				COLD PLANE CONFORM FOR HMA OVERLAY
Lt/Rt	26+86	47+16					225.7			434.9	2,030	OVERLAY AFTER SHOULDER WIDENING, PAVEMENT RECONSTRUCTION, AND REPLACE AC SURFACING WORK IS COMPLETE
									10.2	27.8		FROM UNDERDRAINS TABLE ON SHEET Q-3
										4.68		FROM DRAINAGE TABLE ON SHEET Q-1
										48.0		FROM HMA DIKE TABLE ON SHEET Q-1
				TOTAL	1,933.3	297	225.7	367.5	1,477.3	1,428.9	2,030	

SUMMARY OF QUANTITIES

Q-2

STATE OF CALIFORNIA - DEPARTMENT OF TRANSPORTATION
Caltrans® DIVISION OF ENGINEERING

FUNCTIONAL SUPERVISOR: NESAR FORMOLI
CALCULATED-DESIGNED BY: JUSTIN UNCK
CHECKED BY: JERRY CAGLE
REVISED BY
DATE REVISED

LAST REVISION 00-00-00 | DATE PLOTTED => 11-DEC-2012 | TIME PLOTTED => 12:07

Dist	COUNTY	ROUTE	POST MILES TOTAL PROJECT	SHEET No.	TOTAL SHEETS
03	Nev	49	31.3/R32.6	12	15

REGISTERED CIVIL ENGINEER 10-11-12 DATE

10-15-12
PLANS APPROVAL DATE

REGISTERED PROFESSIONAL ENGINEER JUSTIN A. UNCK No. 65889 Exp. 12/31/13 CIVIL STATE OF CALIFORNIA

THE STATE OF CALIFORNIA OR ITS OFFICERS OR AGENTS SHALL NOT BE RESPONSIBLE FOR THE ACCURACY OR COMPLETENESS OF SCANNED COPIES OF THIS PLAN SHEET.

NOTES:

1. EXACT LOCATIONS OF WORK TO BE DETERMINED BY THE ENGINEER.

UNDERDRAINS

UNDERDRAIN SYSTEM No.	"M2" Sta		6" ALTERNATIVE PIPE UNDERDRAIN	6" ALTERNATIVE PIPE CULVERT	PLACE HMA (MISCELLANEOUS AREA)	HOT MIX ASPHALT (TYPE A)		UNDERDRAIN MARKER	CLASS 2 AB
						PAVED DITCH	OVER CULVERT		
	FROM	TO	LF	LF	SQYD	TON	TON	EA	CY
1	29+12.1	30+47.8	124	55	70.7	11.5	3.2	2	5.1
2	32+25.7	33+45.7	103	70	60.4	9.9	3.2	2	5.1
SUBTOTAL					131.1	27.8			10.2
TOTAL			227	125	*	#		4	#

* SEE DRAINAGE QUANTITIES TABLE FOR TOTALS NOT GIVEN THIS SHEET.
\# SEE ROADWAY QUANTITIES TABLE FOR TOTALS NOT GIVEN THIS SHEET.

TACK COAT

DESCRIPTION	TACK COAT
	TON
SHOULDER WIDENING	0.13
PAVEMENT RECONSTRUCTION	0.54
HMA OVERLAY	1.41
TOTAL	2.08

PAVEMENT DELINEATION

LOCATION	"M2" Sta		LENGTH	DETAIL No.	4" THERMOPLASTIC TRAFFIC STRIPE LF		NOTES
					WHITE	YELLOW	
L+/R+/CL	FROM	TO	LF		SOLID		
L+/R+	26+36	26+86	50	27B			REMOVE EXISTING DELINEATION AND RESTRIPE TO CONFORM
L+/R+	47+16	47+66	50	27B			REMOVE EXISTING DELINEATION AND RESTRIPE TO CONFORM
CL	26+36	26+86	50	21			REMOVE EXISTING DELINEATION AND RESTRIPE TO CONFORM
CL	47+16	47+66	50	21			REMOVE EXISTING DELINEATION AND RESTRIPE TO CONFORM
CL	26+36	47+66	2,130	21		4,260	RESTRIPE AS 12' LANES, CONFORM 50' PAST LIMIT OF PAVING
L+/R+	26+36	47+66	2,130	27B	4,260		RESTRIPE AS 12' LANES, CONFORM 50' PAST LIMIT OF PAVING
CL	47+66	76+45		21		3,312	APPLY STRIPING TO PAVEMENT RECONSTRUCTION LOCATIONS ONLY
L+/R+	47+66	76+45		27B	3,312		APPLY STRIPING TO PAVEMENT RECONSTRUCTION LOCATIONS ONLY
SUBTOTAL					7,572	7,572	
TOTAL					15,144		

WATER POLLUTION CONTROL

LOCATION	"M2" Sta		TEMPORARY CONSTRUCTION ENTRANCE	TEMPORARY FIBER ROLL	TEMPORARY GRAVEL BAG BERM	TEMPORARY DRAINAGE INLET PROTECTION	TEMPORARY HYDRAULIC MULCH (BONDED FIBER MATRIX)	NOTES
L+/R+	FROM	TO	EA	LF	LF	EA	SQYD	
L+/R+	Var	Var	4					PLACE AS NEEDED IN STAGING/STORAGE AREAS
L+	26+86	47+16		2,500				
L+	26+86	47+16			35			PLACE AT OVERSIDE DRAINS
R+	26+86	47+16				6		PLACE AT INLETS
L+	26+86	47+16					756	PLACE ON DISTURBED SOIL AREAS, EXCEPT EXISTING PULLOUTS
TOTAL			4	2,500	35	6	756	

REPLACE AC SURFACING

LOCATION	APPROXIMATE "M2" Sta		LENGTH	WIDTH	REPLACE AC SURFACING	NOTES
L+/R+	FROM	TO	LF	LF	CY	
L+	27+10	28+00	90	6	5.0	OUTSIDE ½ OF LANE
L+	31+68	32+29	61	6	3.4	OUTSIDE ½ OF LANE
R+	27+38	27+72	34	6	1.8	OUTSIDE ½ OF LANE
R+	28+77	29+20	43	6	2.4	OUTSIDE ½ OF LANE
R+	29+99	30+80	81	6	4.5	OUTSIDE ½ OF LANE
R+	31+68	32+85	117	12	13.0	
R+	37+66	37+78	12	12	1.3	
R+	38+84	39+34	50	6	2.8	INSIDE ½ OF LANE
TOTAL					34.2	

SUMMARY OF QUANTITIES

Q-3

STATE OF CALIFORNIA - DEPARTMENT OF TRANSPORTATION
Caltrans® DIVISION OF ENGINEERING

FUNCTIONAL SUPERVISOR: NESAR FORMOLI
CALCULATED-DESIGNED BY: JUSTIN UNCK
CHECKED BY: JERRY CAGLE
REVISED BY / DATE REVISED

LAST REVISION 00-00-00 | DATE PLOTTED => 11-DEC-2012 | TIME PLOTTED => 12:07

DIST	COUNTY	ROUTE	POST MILES TOTAL PROJECT	SHEET No.	TOTAL SHEETS
03	Nev	49	31.3/R32.6	13	15

REGISTERED CIVIL ENGINEER

January 20, 2012
PLANS APPROVAL DATE

REGISTERED PROFESSIONAL ENGINEER
Cornelis M. Hakim
No. C55610
Exp. 12-31-12
CIVIL
STATE OF CALIFORNIA

THE STATE OF CALIFORNIA OR ITS OFFICERS OR AGENTS SHALL NOT BE RESPONSIBLE FOR THE ACCURACY OR COMPLETENESS OF SCANNED COPIES OF THIS PLAN SHEET.

TO ACCOMPANY PLANS DATED 10-15-12

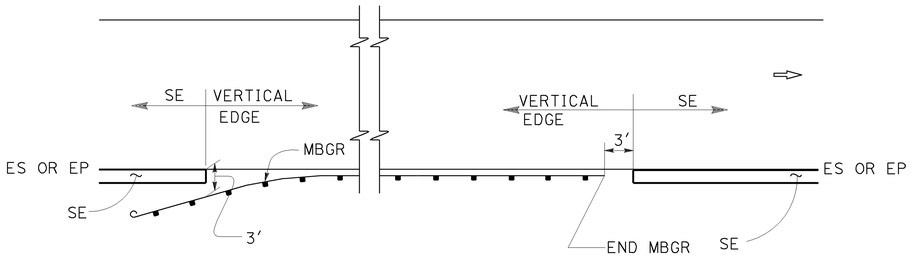

MBGR

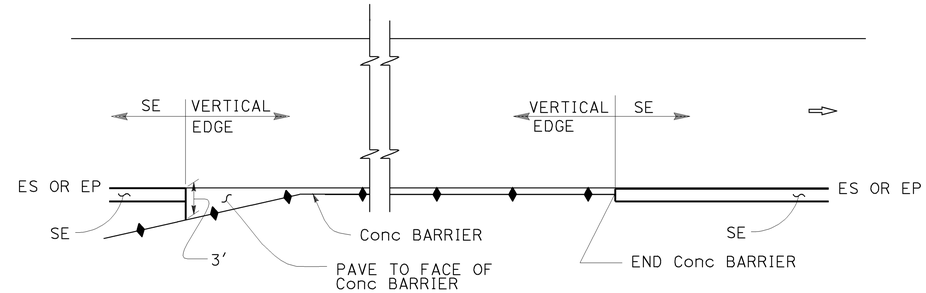

CONCRETE BARRIER

ABBREVIATIONS:

SE SAFETY EDGE

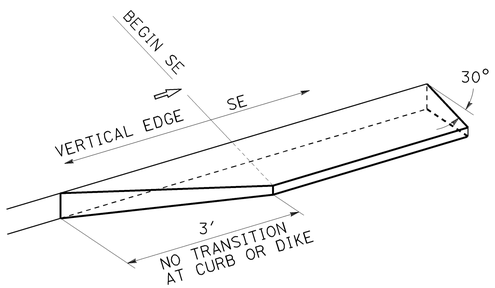

TRANSITION DETAIL FOR CONCRETE ONLY

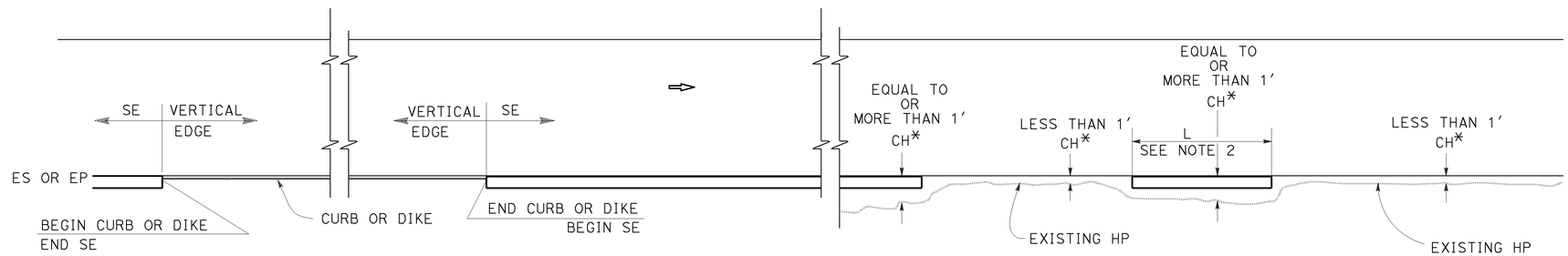

CURB OR DIKE

NARROW SIDE SLOPE

* CH = Distance from ES or EP to existing HP.

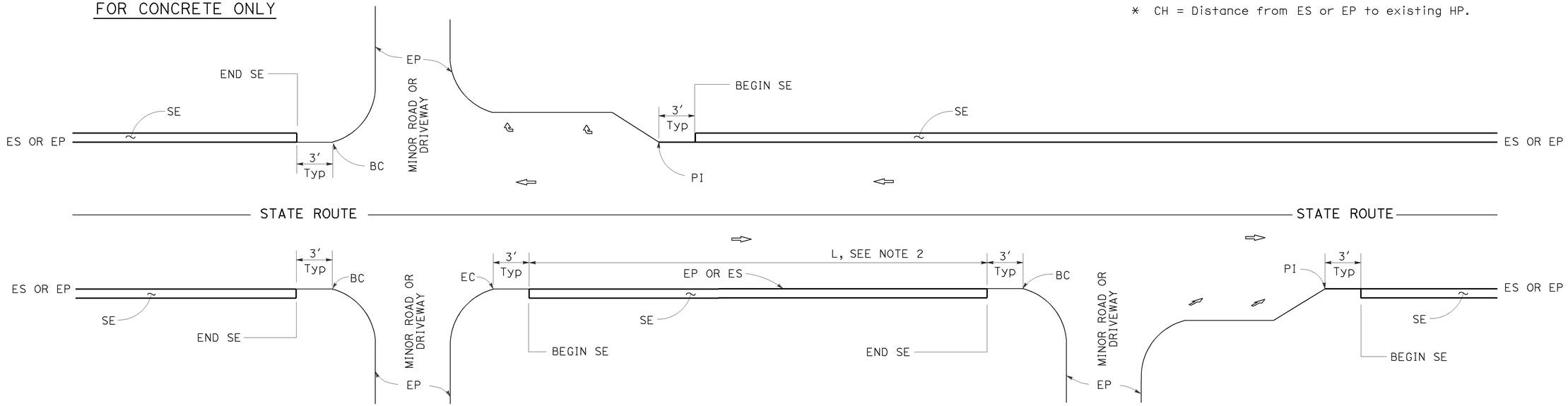

INTERSECTION

MINOR ROADWAY OR DRIVEWAY

DRIVEWAY AND INTERSECTION

NOTES:

1. For details not shown, see Revised Standard Plans RSP P75 and RSP P76.
2. Safety edge is optional when L is less than 30′.

STATE OF CALIFORNIA
DEPARTMENT OF TRANSPORTATION

PAVEMENT EDGE TREATMENTS

NO SCALE

RSP P74 DATED JANUARY 20, 2012 SUPPLEMENTS THE STANDARD PLANS BOOK DATED 2010.

REVISED STANDARD PLAN RSP P74

2010 REVISED STANDARD PLAN RSP P74

01-05-12

DIST	COUNTY	ROUTE	POST MILES TOTAL PROJECT	SHEET No.	TOTAL SHEETS
03	Nev	49	31.3/R32.6	14	15

REGISTERED CIVIL ENGINEER

January 20, 2012
PLANS APPROVAL DATE

REGISTERED PROFESSIONAL ENGINEER Cornelis M. Hakim No. C55610 Exp. 12-31-12 CIVIL STATE OF CALIFORNIA

THE STATE OF CALIFORNIA OR ITS OFFICERS OR AGENTS SHALL NOT BE RESPONSIBLE FOR THE ACCURACY OR COMPLETENESS OF SCANNED COPIES OF THIS PLAN SHEET.

TO ACCOMPANY PLANS DATED 10-15-12

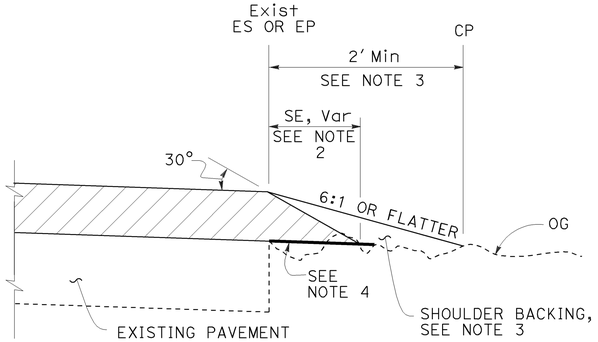

CASE A
Safety Edge

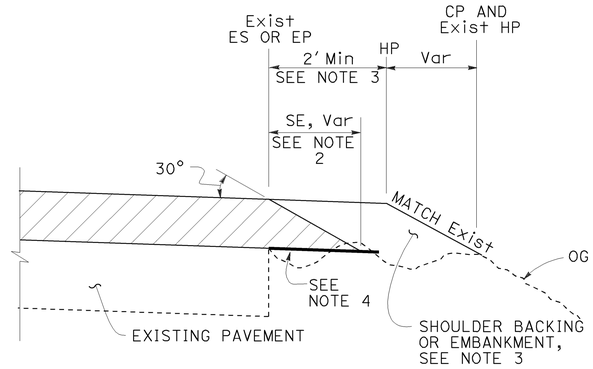

CASE B
Safety Edge

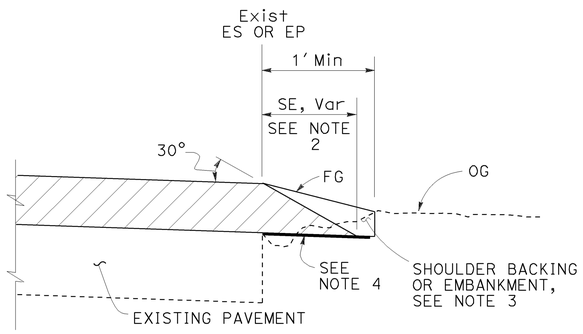

CASE C
Safety Edge

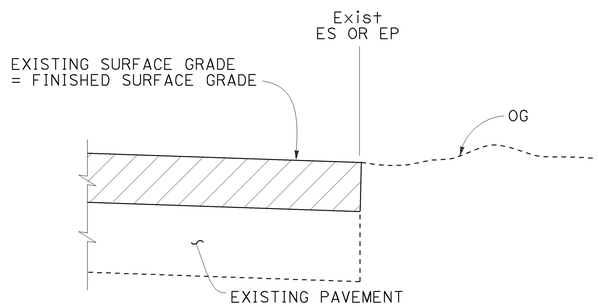

CASE D
Vertical Edge

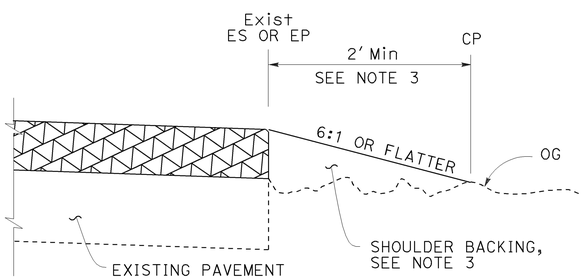

CASE E
Vertical Edge

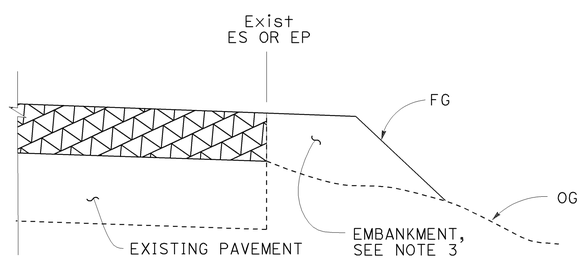

CASE F
Vertical Edge
* See Table A and Revised Std Plan RSP P74

LEGEND:

- HMA OVERLAY
- HMA OR CONCRETE OVERLAY
- CONCRETE OVERLAY

ABBREVIATIONS:

SE SAFETY EDGE
TT TOTAL THICKNESS OF SE

TABLE A
EDGE TREATMENT FOR VARIOUS OVERLAY THICKNESS AND CONDITIONS

	OVERLAY THICKNESS	
FIELD CONDITION	LESS THAN 0.15'	0.15' OR MORE
Exist SLOPE 6:1 OR FLATTER	CASE E	CASE A
Exist SLOPE 3:1 TO 6:1	CASE E	CASE B
Exist SLOPE STEEPER THAN 3:1	CASE F	CASE F
CUT SECTION (REPLACE, COLD PLANE, MILL PAVEMENT)	CASE D	CASE C

ADDITIONAL HMA OR CONCRETE QUANTITIES FOR SE/SIDE/MILE

TYPICAL CROSS SECTION	TT	TOTAL ADDITIONAL MATERIAL FOR SE/SIDE/MILE		
		HMA (TON)	CONCRETE (CY)*	CONCRETE (CY)**
TT	0.15'	NA	NA	NA
	0.20'	13.7	NA	NA
	0.30'	30.9	NA	NA
	0.40'	54.9	NA	NA
	0.45'	69.4	NA	NA
TT 0.43'	0.50'	84.2	NA	NA
	0.60'	113.9	NA	NA
	0.70'	143.6	70.9	94.2
	0.80'	173.3	85.6	112.2
	0.90'	203.0	100.3	130.2
	1.00'	232.7	114.9	148.2
	1.10'	262.4	129.6	166.2
	1.20'	292.1	144.3	184.2

* For Detail "A"
** For Optional Detail "A"

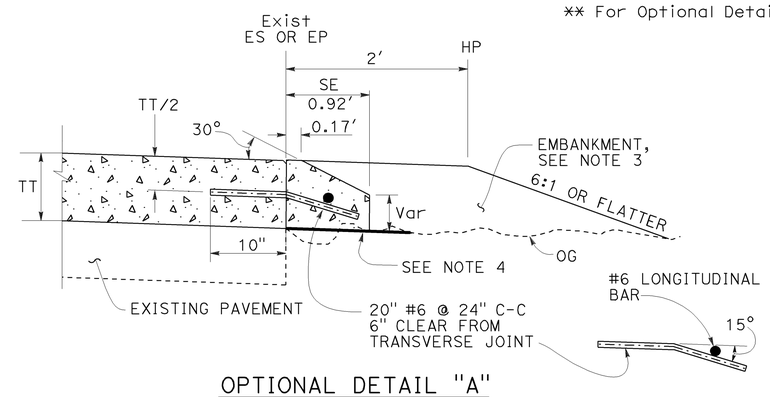

OPTIONAL DETAIL "A"
For concrete overlay
See Note 5

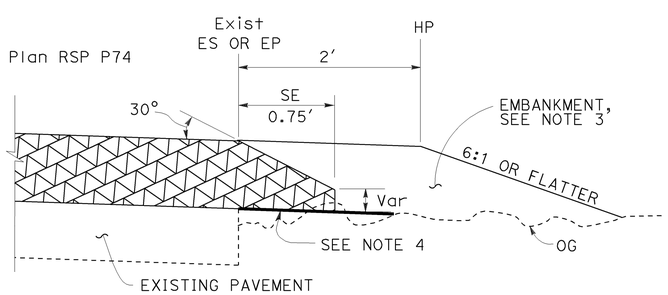

DETAIL "A"
For HMA overlay thickness more than 0.43' or concrete overlay

NOTES:

1. For limits of safety edge and vertical edge treatments, see Revised Standard Plan RSP P74.
2. Details shown for HMA overlay thickness less than 0.43'. See Detail "A" for HMA overlay thickness more than 0.43' or concrete overlay.
3. For locations and limits of shoulder backing or embankment see project plans.
4. Grade existing ground to place safety edge. 1' minimum width
5. Safety edge transverse joint must match overlay transverse joint. End of #6 longitudinal bar must be 2" ±½" clear from transverse joint.
6. Safety edge is not needed in the area of MBGR, barrier, right turn lane and acceleration lane. See Revised Standard Plan RSP P74.

STATE OF CALIFORNIA
DEPARTMENT OF TRANSPORTATION

PAVEMENT EDGE TREATMENTS-OVERLAYS

NO SCALE

RSP P75 DATED JANUARY 20, 2012 SUPPLEMENTS THE STANDARD PLANS BOOK DATED 2010.

REVISED STANDARD PLAN RSP P75

2010 REVISED STANDARD PLAN RSP P75

01-09-12

DIST	COUNTY	ROUTE	POST MILES TOTAL PROJECT	SHEET No.	TOTAL SHEETS
03	Nev	49	31.3/R32.6	15	15

REGISTERED CIVIL ENGINEER

January 20, 2012
PLANS APPROVAL DATE

REGISTERED PROFESSIONAL ENGINEER
Cornelis M. Hakim
No. C55610
Exp. 12-31-12
CIVIL
STATE OF CALIFORNIA

THE STATE OF CALIFORNIA OR ITS OFFICERS OR AGENTS SHALL NOT BE RESPONSIBLE FOR THE ACCURACY OR COMPLETENESS OF SCANNED COPIES OF THIS PLAN SHEET.

TO ACCOMPANY PLANS DATED 10-15-12

LEGEND:

- HMA PAVEMENT
- HMA OR CONCRETE PAVEMENT
- CONCRETE PAVEMENT

ABBREVIATIONS:

SE SAFETY EDGE
TT TOTAL THICKNESS OF SE
HW HINGE WIDTH, DISTANCE FROM ES OR EP TO HP

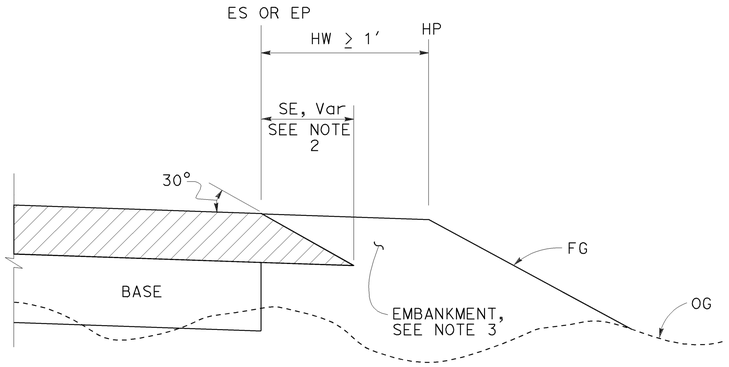

CASE K
Safety Edge - Fill Section, HW ≥ 1′

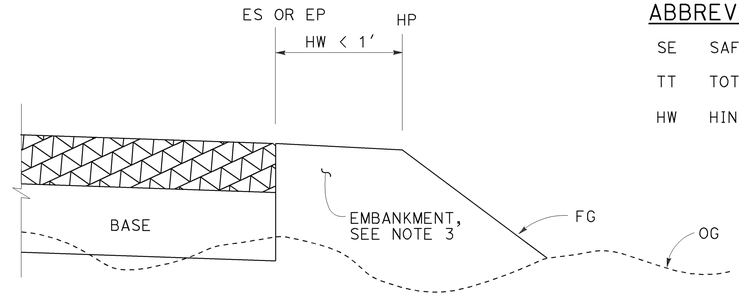

CASE L
Vertical Edge - Fill Section, HW < 1′

FILL SECTION

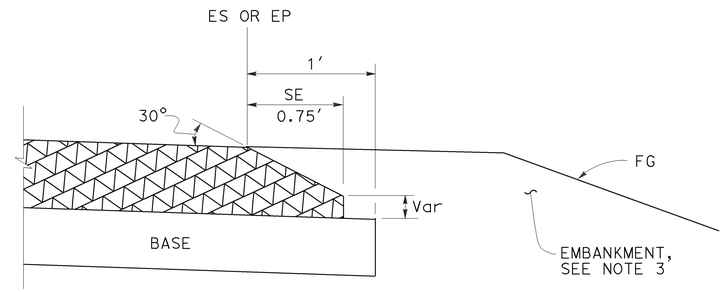

DETAIL "B"
For HMA pavement thickness more than 0.43′ or concrete pavement

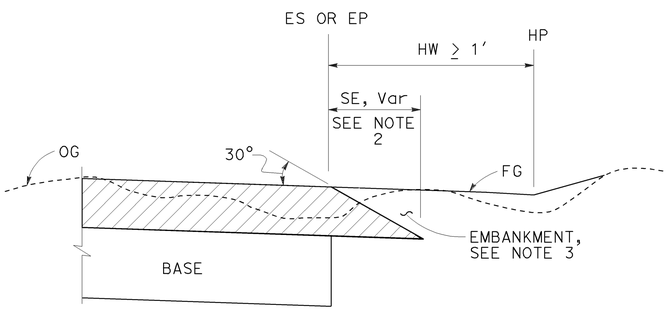

CASE M
Safety Edge - Cut Section, HW ≥ 1′

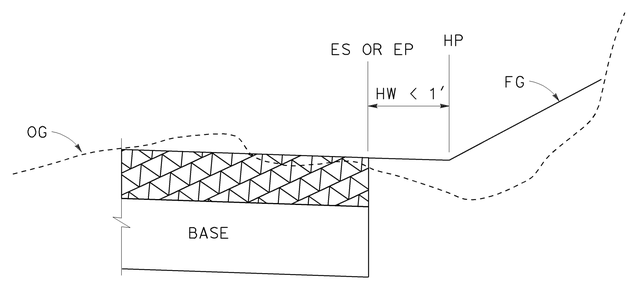

CASE N
Vertical Edge - Cut Section, HW < 1′

CUT SECTION

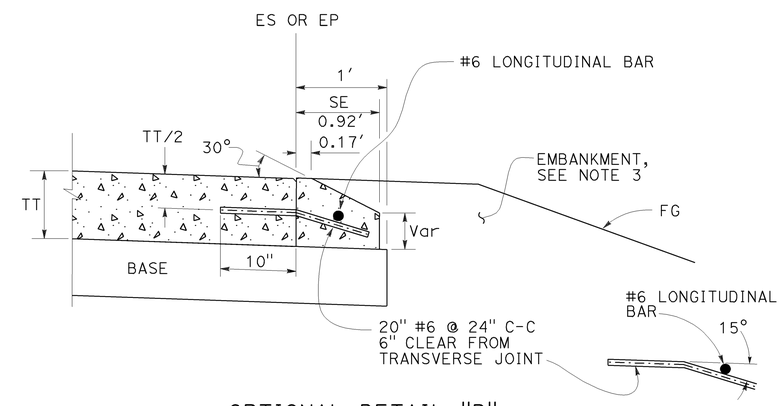

OPTIONAL DETAIL "B"
For concrete pavement
See Note 4

NOTES:

1. For limits of safety edge and vertical edge treatments, see Revised Standard Plan RSP P74
2. Details shown for HMA pavement thickness less than 0.43′. See Detail "B" for HMA pavement thickness more than 0.43′ or concrete pavement.
3. For locations and limits of embankment see project plans.
4. Safety edge transverse joint must match pavement transverse joint. End of #6 longitudinal bar must be 2" ±½" clear from transverse joint.
5. Safety edge is not needed in the area of MBGR, barrier, right turn lane and acceleration lane. See Revised Standard Plan RSP P74.

STATE OF CALIFORNIA
DEPARTMENT OF TRANSPORTATION

PAVEMENT EDGE TREATMENTS-NEW CONSTRUCTION

NO SCALE

RSP P76 DATED JANUARY 20, 2012 SUPPLEMENTS THE STANDARD PLANS BOOK DATED 2010.

REVISED STANDARD PLAN RSP P76

2010 REVISED STANDARD PLAN RSP P76

01-09-12