Dist	COUNTY	ROUTE	POST MILES TOTAL PROJECT	SHEET No.	TOTAL SHEETS
03	ED	193	23.4	1	52

STATE OF CALIFORNIA

DEPARTMENT OF TRANSPORTATION

STP-S193(009)E

PROJECT PLANS FOR CONSTRUCTION ON STATE HIGHWAY

IN EL DORADO COUNTY NEAR PLACERVILLE 2.0 MILES NORTH OF THE SOUTH FORK AMERICAN RIVER BRIDGE

TO BE SUPPLEMENTED BY STANDARD PLANS DATED MAY 2006

INDEX OF PLANS

SHEET No.	DESCRIPTION
1	TITLE AND LOCATION MAP
2	TYPICAL CROSS SECTIONS
3	LAYOUTS
4	PROFILE AND SUPERELEVATION DIAGRAM
5-6	CONSTRUCTION DETAILS
7-8	EROSION CONTROL PLAN AND DETAILS
9-13	DRAINAGE PLAN, PROFILES, DETAILS AND QUANTITIES
14	CONSTRUCTION AREA SIGNS
15-17	STAGE CONSTRUCTION AND QUANTITIES
18	PAVEMENT DELINEATION PLAN
19	SUMMARY OF QUANTITIES
20-22	ELECTRICAL PLANS
23-26	TEMPORARY SIGNAL SYSTEM
27-52	REVISED AND NEW STANDARD PLANS

THE STANDARD PLANS LIST APPLICABLE TO THIS CONTRACT IS INCLUDED IN THE NOTICE TO BIDDERS AND SPECIAL PROVISIONS BOOK.

LOCATION MAP

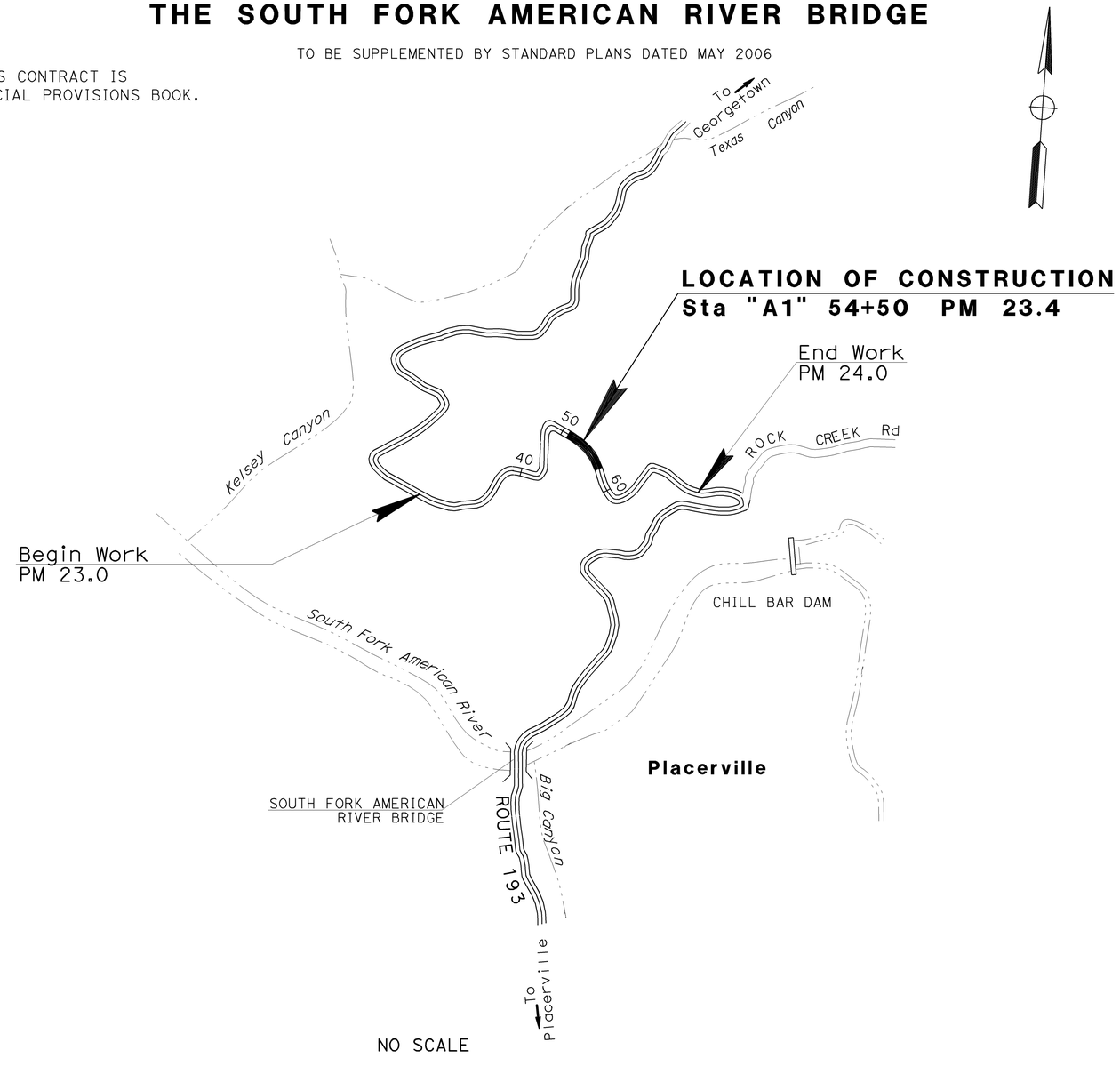

THE CONTRACTOR SHALL POSSESS THE CLASS (OR CLASSES) OF LICENSE AS SPECIFIED IN THE "NOTICE TO BIDDERS."

PROJECT MANAGER: NAJED DAKAK

DESIGN ENGINEER: MOHAMMAD U. SADIQ

3-26-12
PROJECT ENGINEER DATE
REGISTERED CIVIL ENGINEER

HUAN M. CUNG
No. C74406
Exp. 9-30-13
CIVIL
REGISTERED PROFESSIONAL ENGINEER
STATE OF CALIFORNIA

March 26, 2012
PLANS APPROVAL DATE

THE STATE OF CALIFORNIA OR ITS OFFICERS OR AGENTS SHALL NOT BE RESPONSIBLE FOR THE ACCURACY OR COMPLETENESS OF SCANNED COPIES OF THIS PLAN SHEET.

CONTRACT No.	03-1F6004
PROJECT ID	0300020566

LAST REVISION: DATE PLOTTED => 10-APR-2012 TIME PLOTTED => 10:24
00-00-00

Dist	COUNTY	ROUTE	POST MILES TOTAL PROJECT	SHEET No.	TOTAL SHEETS
03	ED	193	23.4	2	52

3-26-12
REGISTERED CIVIL ENGINEER DATE

HUAN M.CUNG No. C74406 Exp. 9-30-13 CIVIL — REGISTERED PROFESSIONAL ENGINEER — STATE OF CALIFORNIA

3-26-12
PLANS APPROVAL DATE

THE STATE OF CALIFORNIA OR ITS OFFICERS OR AGENTS SHALL NOT BE RESPONSIBLE FOR THE ACCURACY OR COMPLETENESS OF SCANNED COPIES OF THIS PLAN SHEET.

NOTES:

1. DIMENSION OF THE PAVEMENT STRUCTURES (STRUCTURAL SECTIONS) ARE SUBJECT TO TOLERANCES SPECIFIED IN THE STANDARD SPECIFICATIONS.
2. SUPERELEVATIONS ARE SHOWN ON THE SUPERELEVATION DIAGRAMS.
3. FOR METAL BEAM GUARD RAILING, SEE LAYOUT.
4. HMA DIKE: FROM Sta "A1" 51+46.00 TO 51+90.00, USE TYPE C.
   FROM Sta "A1" 51+90.00 TO 56+65.00, USE TYPE F.
   FROM Sta "A1" 56+65.00 TO 57+09.00, USE TYPE C.
5. HEIGHT OF GABION WALL: 3', 4.5', 6', OR 7.5'.
   GABION WALL ENDS AT "A1" 56+64.00, SEE C-1 SHEET.
6. FOR GABION HEIGHT DETAILS, SEE Q-1 SHEET.

DESIGN DESIGNATION

2014 ADT = 3,000
2034 ADT = 5,160

2014 DHV = 340
2034 DHV = 520

D = 65%
T = 4.0%
TI(20) =8.0

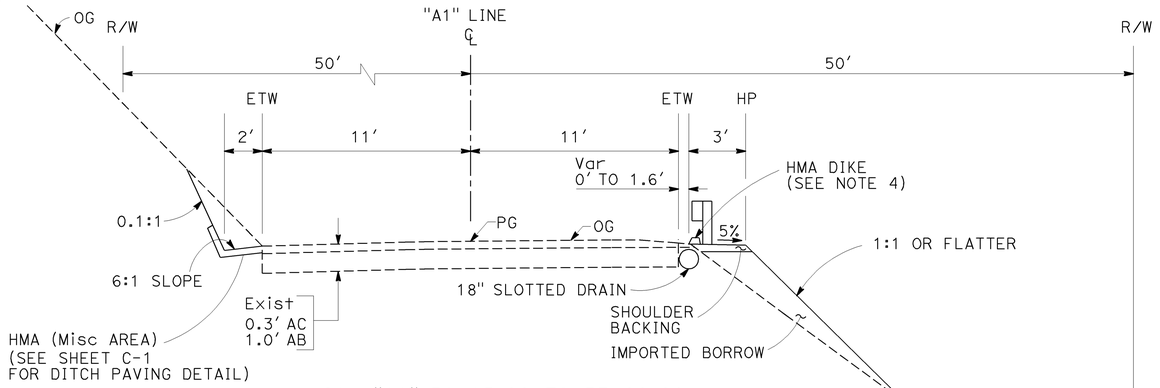

Sta "A1" 56+65.00 TO 57+09.00

ROUTE 193

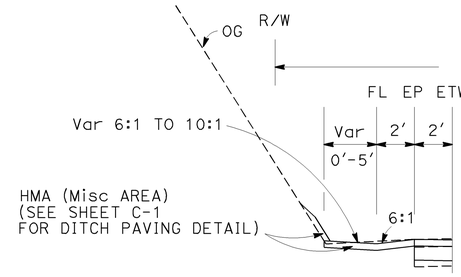

Sta "A1" 55+50.00 TO 56+50.00

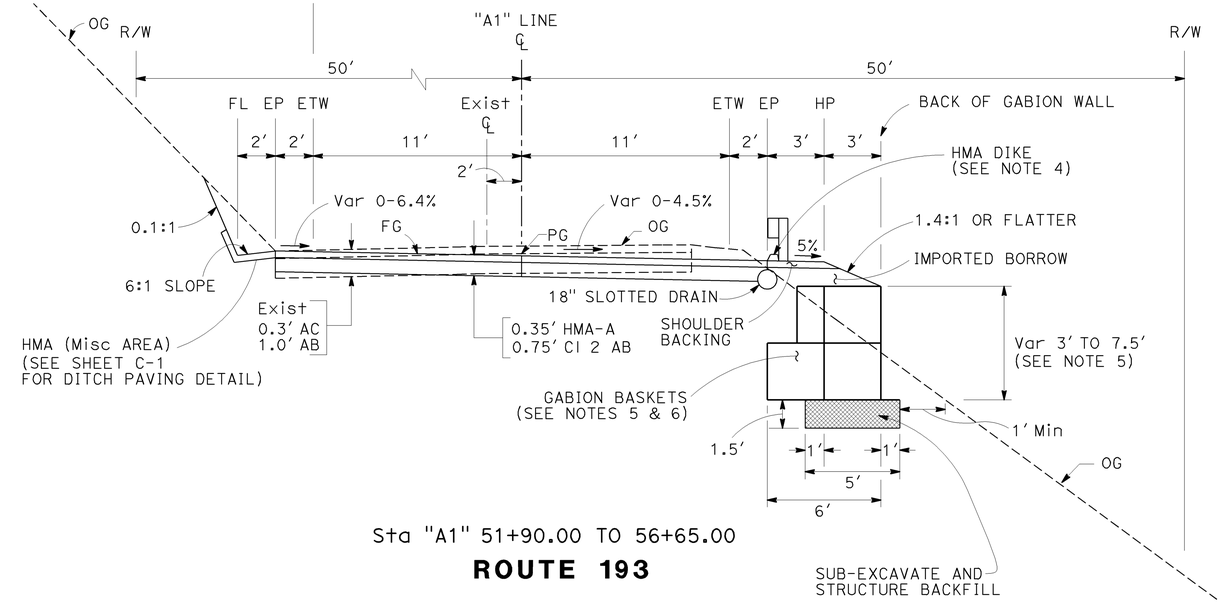

Sta "A1" 51+90.00 TO 56+65.00

ROUTE 193

TYPICAL CROSS SECTIONS

NO SCALE

X-1

LAST REVISION DATE PLOTTED => 10-APR-2012
00-00-00 TIME PLOTTED => 10:24

HUAN CUNG — CALCULATED-DESIGNED BY
MICHAEL HUTZELMAN — CHECKED BY
MOHAMMAD SADIQ — FUNCTIONAL SUPERVISOR
REVISED BY — DATE REVISED

STATE OF CALIFORNIA - DEPARTMENT OF TRANSPORTATION
DIVISION OF ENGINEERING

BORDER LAST REVISED 7/2/2010

USERNAME => s134507
DGN FILE => 0300020566ca001.dgn

RELATIVE BORDER SCALE IS IN INCHES 0 1 2 3

UNIT 0322

PROJECT NUMBER & PHASE 03000205661

NOTES:

1. FOR ACCURATE RIGHT OF WAY DATA, CONTACT RIGHT OF WAY ENGINEERING AT THE DISTRICT OFFICE.
2. SEE CONSTRUCTION DETAIL (C-2) FOR IN-LINE TERMINAL SYSTEM (TYPE X-TENSION)
3. TEMPORARY RAILING (TYPE K) SHALL BE PINNED

Dist	COUNTY	ROUTE	POST MILES TOTAL PROJECT	SHEET No.	TOTAL SHEETS
03	ED	193	23.4	3	52

3-26-12
REGISTERED CIVIL ENGINEER DATE

HUAN M.CUNG No. C74406 Exp. 9-30-13 CIVIL
REGISTERED PROFESSIONAL ENGINEER STATE OF CALIFORNIA

3-26-12
PLANS APPROVAL DATE

THE STATE OF CALIFORNIA OR ITS OFFICERS OR AGENTS SHALL NOT BE RESPONSIBLE FOR THE ACCURACY OR COMPLETENESS OF SCANNED COPIES OF THIS PLAN SHEET.

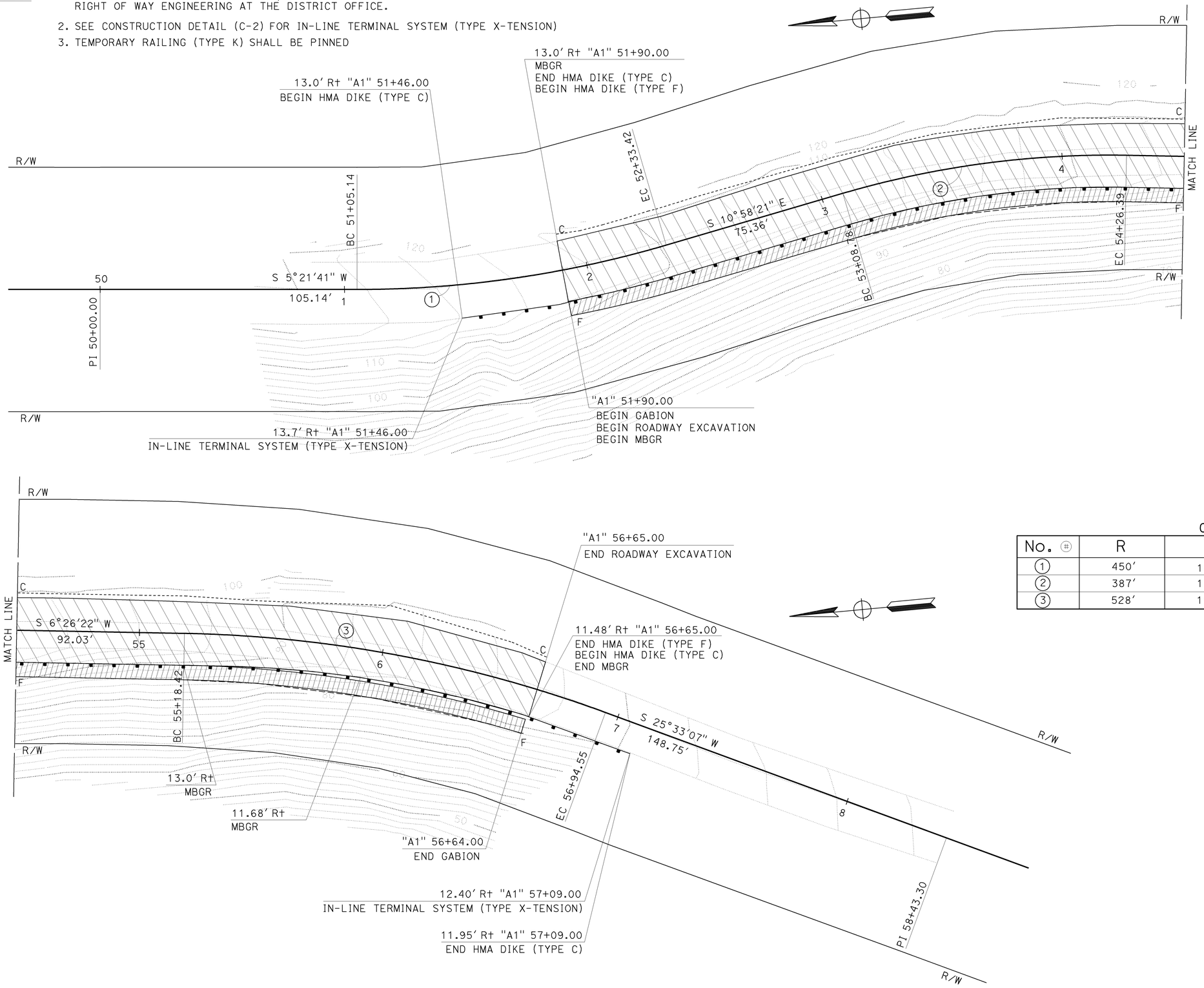

LEGEND:

GABION

ROADWAY EXCAVATION

CURVE DATA

No. ⓐ	R	Δ	T	L
①	450′	16°20′02"	64.58′	128.29′
②	387′	17°24′43"	59.26′	117.61′
③	528′	19°06′44"	88.89′	176.13′

LAYOUT

SCALE: 1"=20′ L-1

REVISED BY | DATE REVISED
HUAN CUNG | MICHAEL HUTZELMAN
CALCULATED-DESIGNED BY | CHECKED BY
FUNCTIONAL SUPERVISOR

STATE OF CALIFORNIA - DEPARTMENT OF TRANSPORTATION
Caltrans® DIVISION OF ENGINEERING

LAST REVISION | DATE PLOTTED => 10-APR-2012
00-00-00 | TIME PLOTTED => 10:24

Dist	COUNTY	ROUTE	POST MILES TOTAL PROJECT	SHEET No.	TOTAL SHEETS
03	ED	193	23.4	4	52

3-26-12
REGISTERED CIVIL ENGINEER DATE

HUAN M. CUNG No. C74406 Exp. 9-30-13 CIVIL — REGISTERED PROFESSIONAL ENGINEER — STATE OF CALIFORNIA

3-26-12
PLANS APPROVAL DATE

THE STATE OF CALIFORNIA OR ITS OFFICERS OR AGENTS SHALL NOT BE RESPONSIBLE FOR THE ACCURACY OR COMPLETENESS OF SCANNED COPIES OF THIS PLAN SHEET.

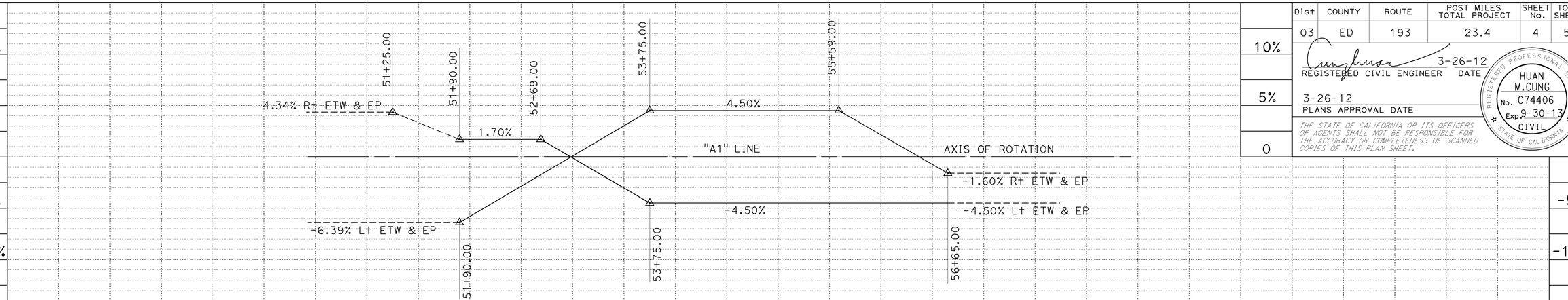

SUPERELEVATION DIAGRAM

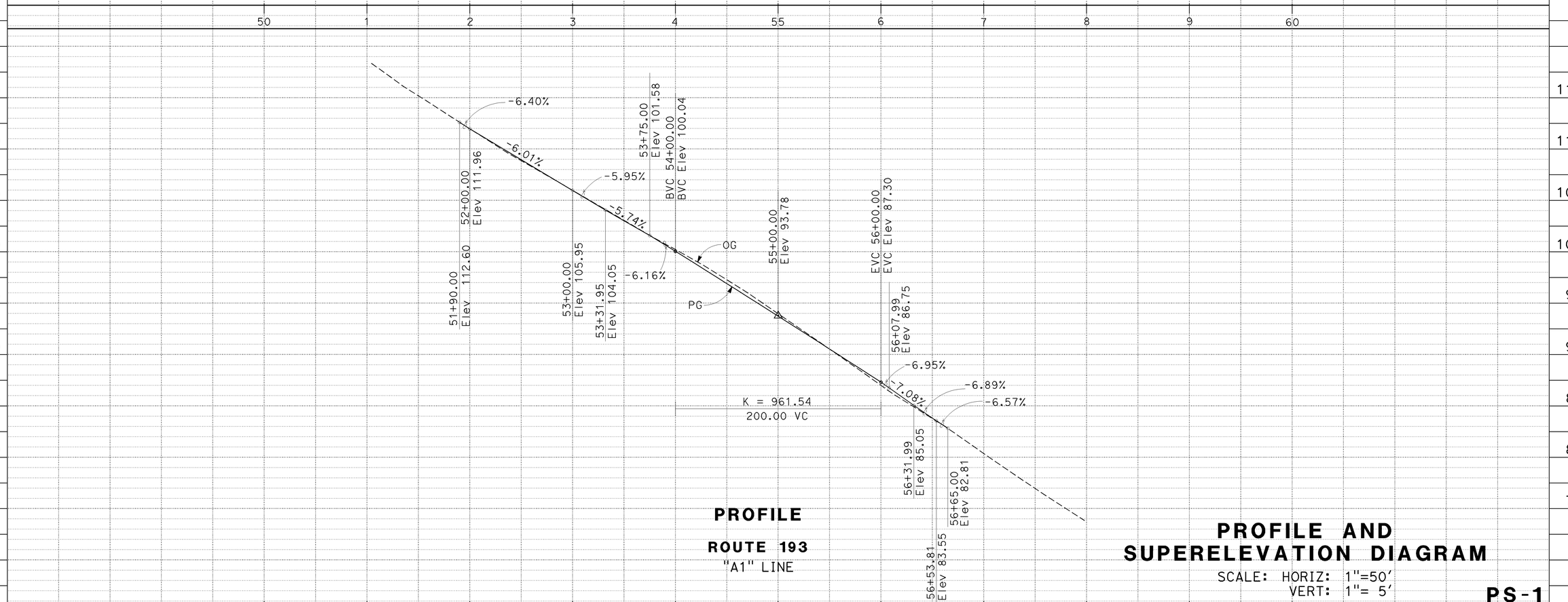

PROFILE

ROUTE 193
"A1" LINE

PROFILE AND SUPERELEVATION DIAGRAM

SCALE: HORIZ: 1"=50'
VERT: 1"= 5'

PS-1

		TOTAL
CY Exc	435 / 2	437
CY Emb	276 / 6	282

STATE OF CALIFORNIA - DEPARTMENT OF TRANSPORTATION
DIVISION OF ENGINEERING
FUNCTIONAL SUPERVISOR: MOHAMMAD U. SADIQ
CALCULATED-DESIGNED BY
CHECKED BY
HUAN CUNG
REVISED BY
DATE REVISED
LAST REVISION DATE PLOTTED => 10-APR-2012
TIME PLOTTED => 10:24
00-00-00

BORDER LAST REVISED 7/2/2010
USERNAME => s134507
DGN FILE => 0300020566fb001.dgn
RELATIVE BORDER SCALE IS IN INCHES 0 1 2 3
UNIT 0322
PROJECT NUMBER & PHASE 03000205661

Dist	COUNTY	ROUTE	POST MILES TOTAL PROJECT	SHEET No.	TOTAL SHEETS
03	ED	193	23.4	5	52

3-26-12
REGISTERED CIVIL ENGINEER DATE

HUAN M. CUNG No. C74406 Exp. 9-30-13 CIVIL — REGISTERED PROFESSIONAL ENGINEER — STATE OF CALIFORNIA

3-26-12
PLANS APPROVAL DATE

THE STATE OF CALIFORNIA OR ITS OFFICERS OR AGENTS SHALL NOT BE RESPONSIBLE FOR THE ACCURACY OR COMPLETENESS OF SCANNED COPIES OF THIS PLAN SHEET.

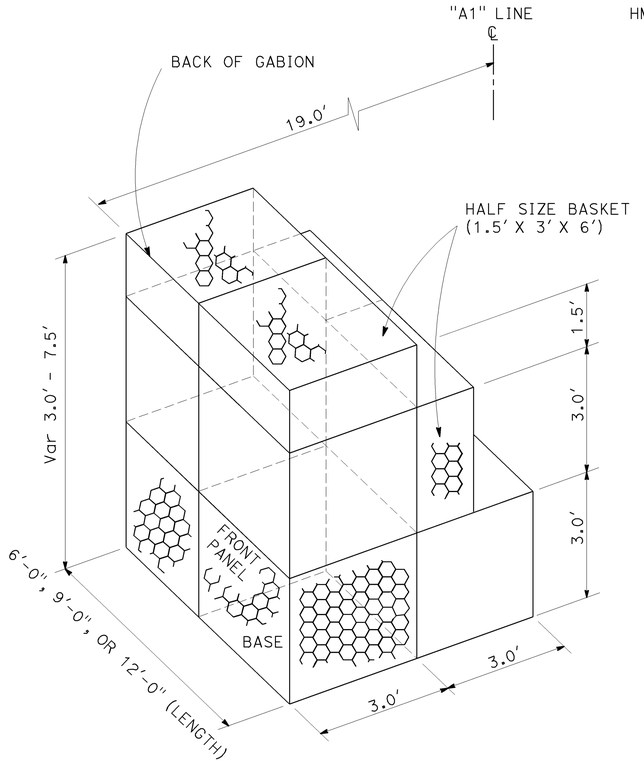

TYPICAL GABION BASKET LAYOUT
(PICTORIAL VIEW)

(FOR GABION BASKET DETAILS SEE STD PLAN D100A-B)

NOTES:

FOR GABION HEIGHT DETAIL, SEE SUMMARY OF QUANTITY SHEET.

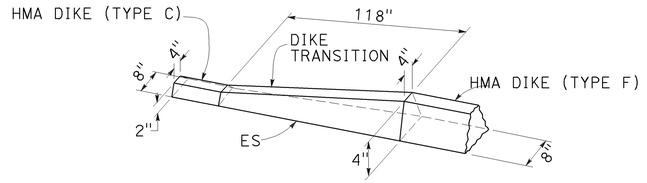

HMA DIKE TRANSITION TYPE C TO TYPE F

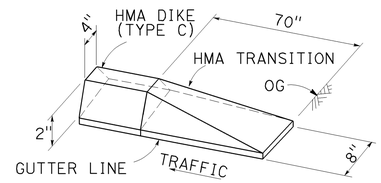

HMA DIKE (TYPE C) APPROACH TRANSITION

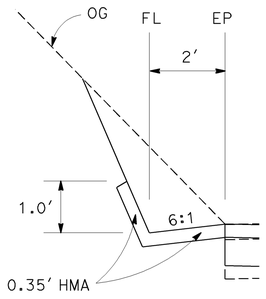

Sta "A1" 51+90.00 TO 55+50.00
"A1" 56+50.00 TO 57+09.00

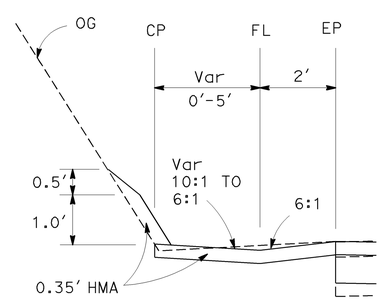

Sta "A1" 55+50.00 TO 56+50.00

DITCH PAVING DETAIL

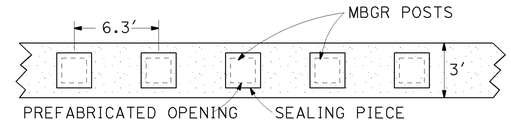

GUARD RAILING WEED CONTROL MAT (FIBER) AT MBGR

PLAN

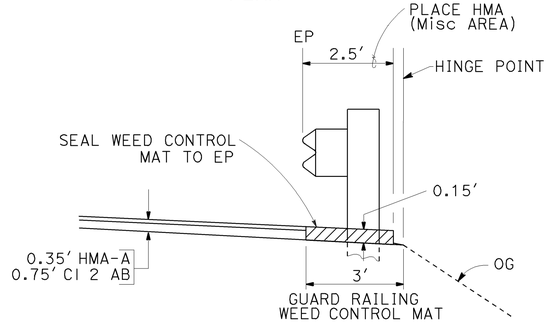

GUARD RAILING WEED CONTROL MAT (FIBER) AT EP

NOTES:

1. FOR LOCATIONS SEE SUMMARY OF QUANTITIES.
2. POST SPACING & OTHER DIMENSIONS TO BE VERIFIED IN THE FIELD BY THE CONTRACTOR.

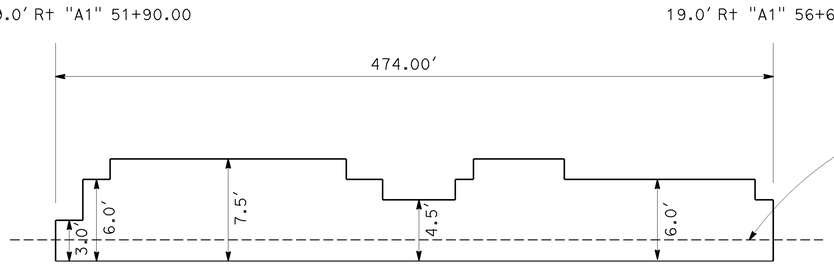

TYPICAL GABION BASKET LAYOUT
(ELEVATION)

NO SCALE

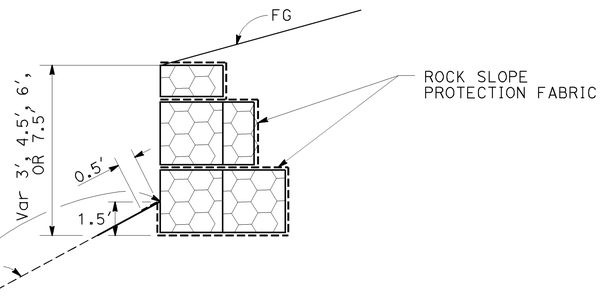

GABION FABRIC DETAIL
SECTION

NOTES:

1. WRAP ROCK SLOPE PROTECTION FABRIC AROUND GABION SO THAT IT COMPLETELY COVERS PORTION OF GABION IN CONTACT WITH SOIL.
2. INTERNAL CONNECTING WIRE AND GABION MESH SHALL BE GALVANIZED AND PVC COATED.

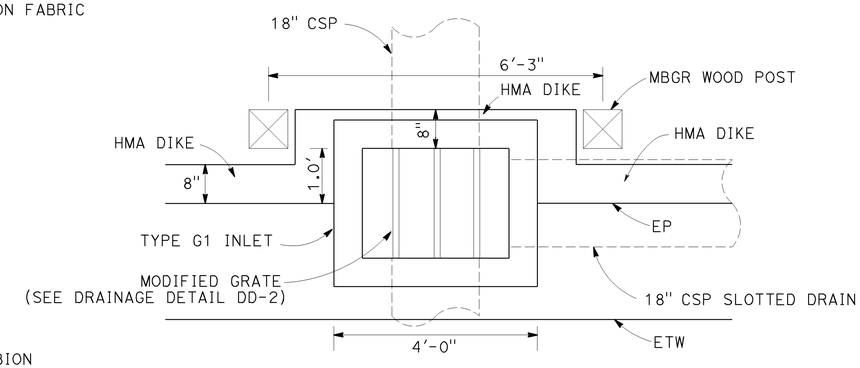

DIKE TRANSITION AROUND G1 DI

Sta "A1" 53+83.12
"A1" 57+10.00

NOTES: FOR TYPE DIKE, SEE NOTE 4 ON X-1 SHEET.

CONSTRUCTION DETAILS

NO SCALE

C-1

STATE OF CALIFORNIA - DEPARTMENT OF TRANSPORTATION
DIVISION OF ENGINEERING
FUNCTIONAL SUPERVISOR: MOHAMMAD U. SADIQ
CALCULATED-DESIGNED BY: HUAN CUNG
CHECKED BY
REVISED BY | DATE REVISED

LAST REVISION | DATE PLOTTED => 10-APR-2012
00-00-00 | TIME PLOTTED => 10:24

BORDER LAST REVISED 7/2/2010
USERNAME => s134507
DGN FILE => 0300020566ga001.dgn
RELATIVE BORDER SCALE IS IN INCHES 0 1 2 3
UNIT 0322
PROJECT NUMBER & PHASE 03000205661

Dist	COUNTY	ROUTE	POST MILES TOTAL PROJECT	SHEET No.	TOTAL SHEETS
03	ED	193	23.4	6	52

3-26-12
REGISTERED CIVIL ENGINEER DATE

HUAN M.CUNG No. C74406 Exp 9-30-13 CIVIL
REGISTERED PROFESSIONAL ENGINEER
STATE OF CALIFORNIA

3-26-12
PLANS APPROVAL DATE

THE STATE OF CALIFORNIA OR ITS OFFICERS OR AGENTS SHALL NOT BE RESPONSIBLE FOR THE ACCURACY OR COMPLETENESS OF SCANNED COPIES OF THIS PLAN SHEET.

REVISED BY | DATE REVISED
HUAN CUNG | HUAN CUNG
CALCULATED-DESIGNED BY | CHECKED BY
FUNCTIONAL SUPERVISOR
MOHAMMAD SADIQ

STATE OF CALIFORNIA - DEPARTMENT OF TRANSPORTATION
DIVISION OF ENGINEERING

NOTES:

1. SEE MANUFACTURER PLANS FOR ADDITIONAL DETAILS AND DIMENSIONS NOT SHOWN ON PLANS.
2. SYSTEM TO BE INSTALLED PER MANUFACTURER SPECIFICATIONS.
3. ONLY TIGHTEN THE CABLE ASSEMBLIES USING THE NUTS AT THE CABLE BRACKET (SEE DETAIL "D"). DO NOT TIGHTEN THE CABLES AT THE FRONT OF THE GROUND ANCHOR.
4. WHEN DRIVING STEEL POST, ENSURE THAT A DRIVING CAP WITH TIMBER OR PLASTIC INSERT IS USED TO PREVENT DAMAGE TO THE GALVANIZING TO THE TOP OF THE STEEL POST.

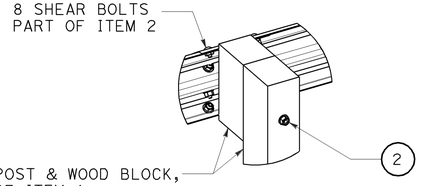

DETAIL "C"

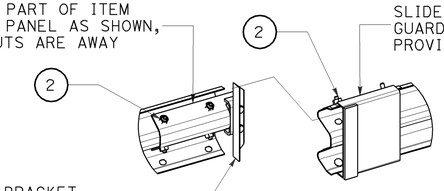

DETAIL "B 1"

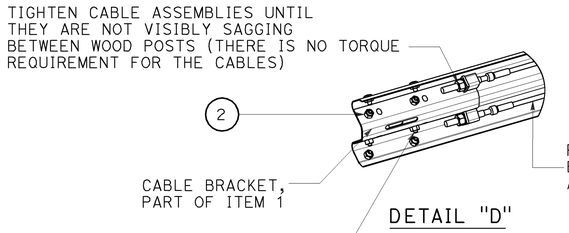

DETAIL "D"

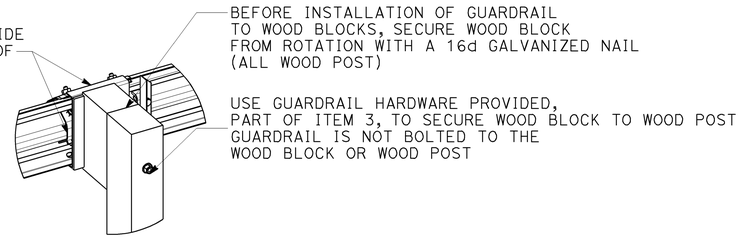

DETAIL "B 2"

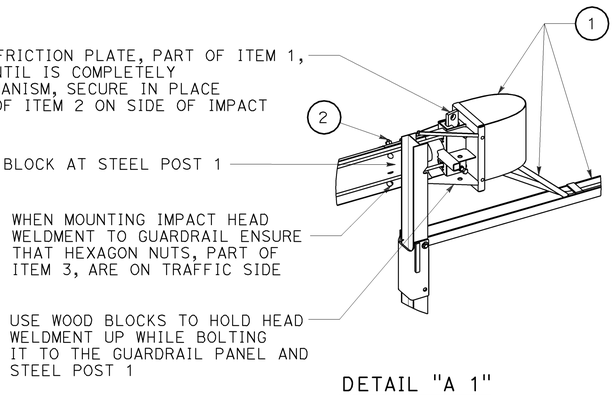

DETAIL "A 1"

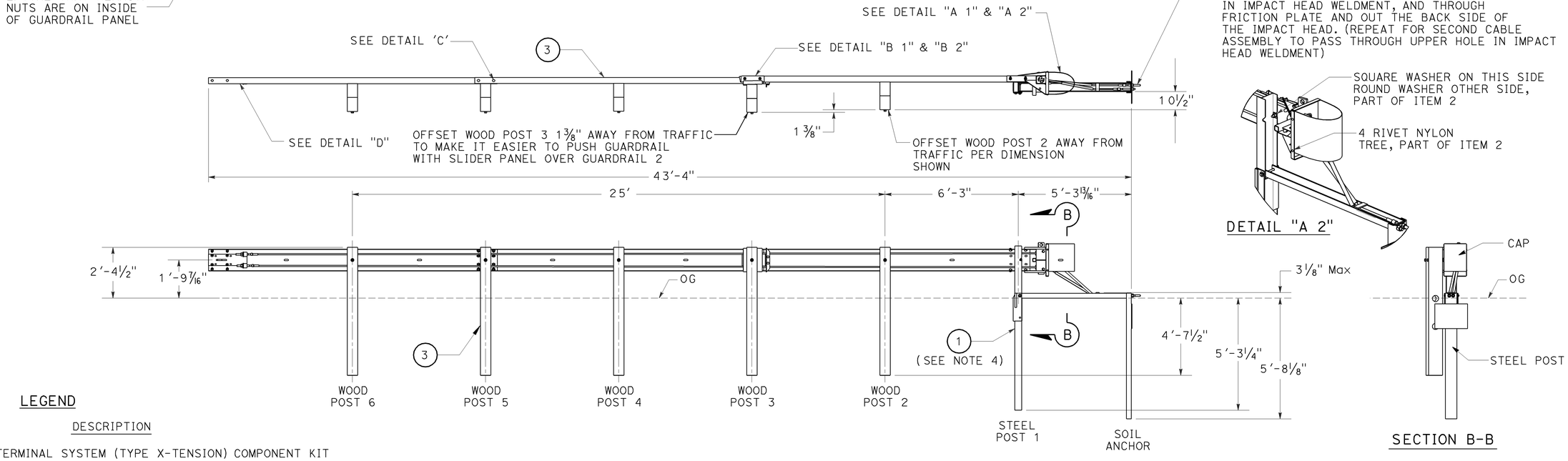

DETAIL "A 2"

SECTION B-B

LEGEND

ITEM	DESCRIPTION
1	TERMINAL SYSTEM (TYPE X-TENSION) COMPONENT KIT
2	TERMINAL SYSTEM (TYPE X-TENSION) SYSTEM HARDWARE KIT
3	TERMINAL SYSTEM (TYPE X-TENSION) GUARDRAIL COMPONENT KIT 1

IN-LINE TERMINAL SYSTEM (TYPE X-TENSION) DETAIL

CONSTRUCTION DETAILS

NO SCALE

C-2

LAST REVISION DATE PLOTTED => 10-APR-2012
00-00-00 TIME PLOTTED => 10:24

Dist	COUNTY	ROUTE	POST MILES TOTAL PROJECT	SHEET No.	TOTAL SHEETS
03	ED	193	23.4	7	52

LICENSED LANDSCAPE ARCHITECT

3-26-12
PLANS APPROVAL DATE

LICENSED LANDSCAPE ARCHITECT
JAMES G. WILLIAMSON
No. 5415
Signature
02-28-14
Renewal Date
3-26-12
Date
STATE OF CALIFORNIA

THE STATE OF CALIFORNIA OR ITS OFFICERS OR AGENTS SHALL NOT BE RESPONSIBLE FOR THE ACCURACY OR COMPLETENESS OF SCANNED COPIES OF THIS PLAN SHEET.

NOTE:

FOR ACCURATE RIGHT OF WAY DATA, CONTACT
RIGHT OF WAY ENGINEERING AT THE DISTRICT OFFICE.

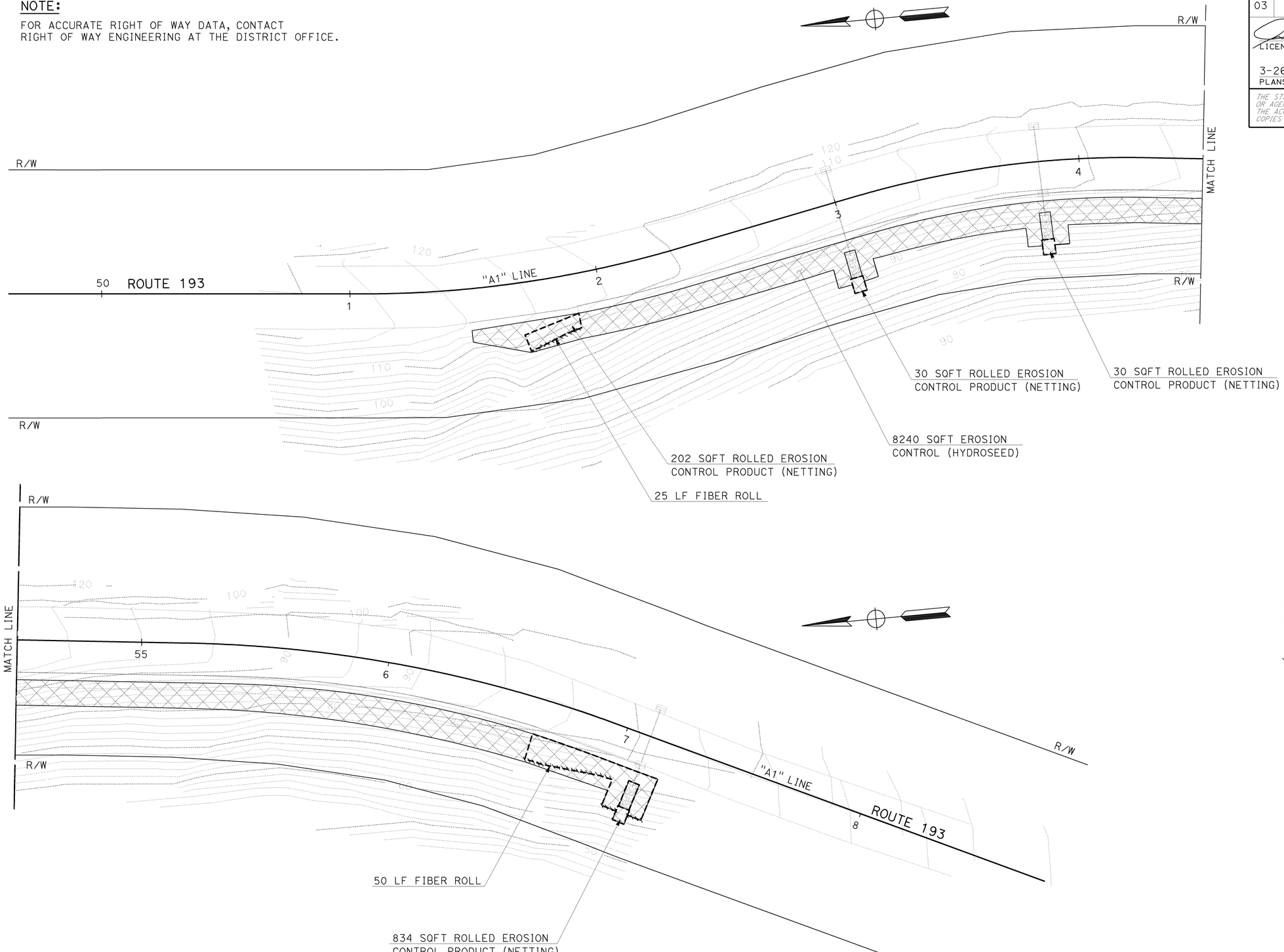

LEGEND:

- EROSION CONTROL (HYDROSEED)
- ROLLED EROSION CONTROL PRODUCT (NETTING)
- FIBER ROLL

EROSION CONTROL PLAN

SCALE 1" =20'

EC-1

APPROVED FOR EROSION CONTROL WORK ONLY

REVISED BY	DATE REVISED

CALCULATED-DESIGNED BY
J. KURTH

CHECKED BY
J. WILLIAMSON

SENIOR LANDSCAPE ARCHITECT
T. CHRIS JOHNSON

STATE OF CALIFORNIA - DEPARTMENT OF TRANSPORTATION
Caltrans
LANDSCAPE ARCHITECTURE

LAST REVISION | DATE PLOTTED => 10-APR-2012
02-01-12 | TIME PLOTTED => 10:24

Dist	COUNTY	ROUTE	POST MILES TOTAL PROJECT	SHEET No.	TOTAL SHEETS
03	ED	193	23.4	8	52

LICENSED LANDSCAPE ARCHITECT

3-26-12
PLANS APPROVAL DATE

LICENSED LANDSCAPE ARCHITECT
JAMES G. WILLIAMSON
No. 5415
Signature
02-28-14
Renewal Date
3-26-12
Date
STATE OF CALIFORNIA

THE STATE OF CALIFORNIA OR ITS OFFICERS OR AGENTS SHALL NOT BE RESPONSIBLE FOR THE ACCURACY OR COMPLETENESS OF SCANNED COPIES OF THIS PLAN SHEET.

NOTE:

1. KEY TRENCH AT THE TOE OF SLOPE SHALL NOT BE USED FOR ROLLED EROSION CONTROL PRODUCT (NETTING), PLACE FIBER ROLL AT THE LOWER EDGE OF NETTING WHERE SHOWN.
2. ANCHOR ROLLED EROSION CONTROL PRODUCT (NETTING) INTO RSP

EROSION CONTROL QUANTITY TABLE

STATION	ROLLED EROSION CONTROL PRODUCT (NETTING)	FIBER ROLLS	EROSION CONTROL (HYDROSEED) (SQFT)	EROSION CONTROL (HYDROSEED)						
				STEP 1			STEP 2	STEP 3		
				(N) SEED	(N) FIBER	(N) ORGANIC FERTILIZER	(N) STRAW	(N) FIBER	(N) ORGANIC FERTILIZER	(N) TACKIFIER
	SQFT	LF	SQFT	LB	LB	LB	TON	LB	LB	LB
"A1" 51+46 TO 57+19	--	--	8,240	8.5	115	95.0	0.38	115	95.0	11.5
"A1" 51+68 TO 51+90	202	25	--	--	--	--	--	--	--	--
"A1" 52+97 TO 53+03	30	--	--	--	--	--	--	--	--	--
"A1" 53+80 TO 53+86	30	--	--	--	--	--	--	--	--	--
"A1" 56+64 TO 57+19	834	50	--	--	--	--	--	--	--	--
TOTAL	1,096	75	8,240	--	--	--	--	--	--	--

(N) - NOT A SEPARATE PAY ITEM, FOR INFORMATION ONLY

LEGEND:

FIBER ROLL

ROLLED EROSION CONTROL PRODUCT (NETTING)

EROSION CONTROL (HYRDOSEED)

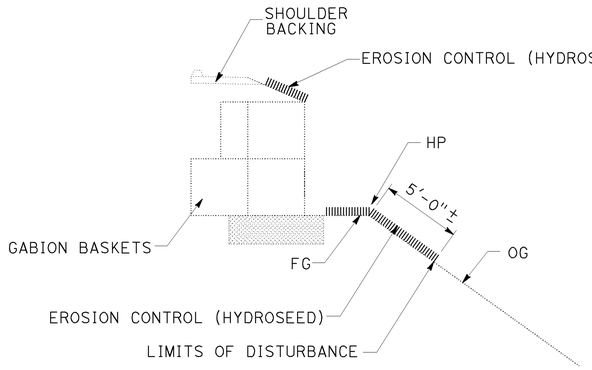

STA "A1" 51+90 TO 56+64

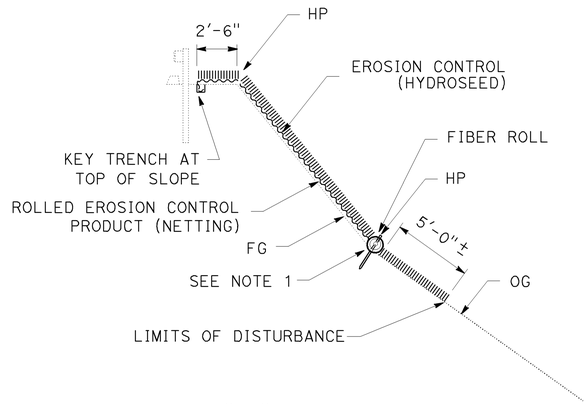

STA "A1" 51+68 TO 51+90
STA "A1" 56+64 TO 57+19

SECTION

EROSION CONTROL TYPICAL CROSS SECTION

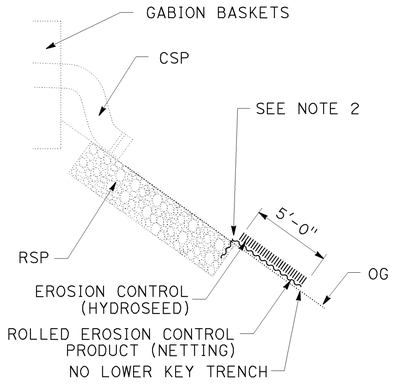

STA "A1" 53+00
STA "A1" 53+83.12

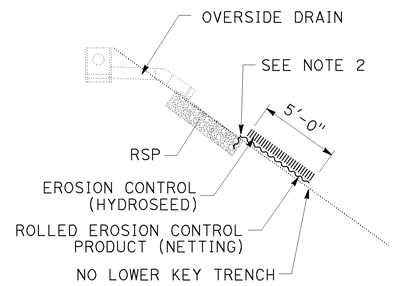

STA "A1" 57+10

SECTION

EROSION CONTROL AT RSP LOCATIONS

EROSION CONTROL DETAILS

NO SCALE

ECD-1

APPROVED FOR EROSION CONTROL WORK ONLY

J. KURTH — CALCULATED-DESIGNED BY
J. WILLIAMSON — CHECKED BY
REVISED BY — DATE REVISED
T. CHRIS JOHNSON — SENIOR LANDSCAPE ARCHITECT
STATE OF CALIFORNIA - DEPARTMENT OF TRANSPORTATION
LANDSCAPE ARCHITECTURE

LAST REVISION 02-01-12
DATE PLOTTED => 10-APR-2012
TIME PLOTTED => 10:24

BORDER LAST REVISED 7/2/2010
USERNAME => s134507
DGN FILE => 0300020566gf001.dgn
RELATIVE BORDER SCALE IS IN INCHES 0 1 2 3
UNIT 0381
PROJECT NUMBER & PHASE 03000205661

NOTES: 1. FOR ACCURATE RIGHT OF WAY DATA, CONTACT RIGHT OF WAY ENGINEERING AT THE DISTRICT OFFICE.

Dist	COUNTY	ROUTE	POST MILES TOTAL PROJECT	SHEET No.	TOTAL SHEETS
03	ED	193	23.4	9	52

3-26-12
REGISTERED CIVIL ENGINEER DATE

3-26-12
PLANS APPROVAL DATE

REGISTERED PROFESSIONAL ENGINEER
HUAN M.CUNG
No. C74406
Exp. 9-30-13
CIVIL
STATE OF CALIFORNIA

THE STATE OF CALIFORNIA OR ITS OFFICERS OR AGENTS SHALL NOT BE RESPONSIBLE FOR THE ACCURACY OR COMPLETENESS OF SCANNED COPIES OF THIS PLAN SHEET.

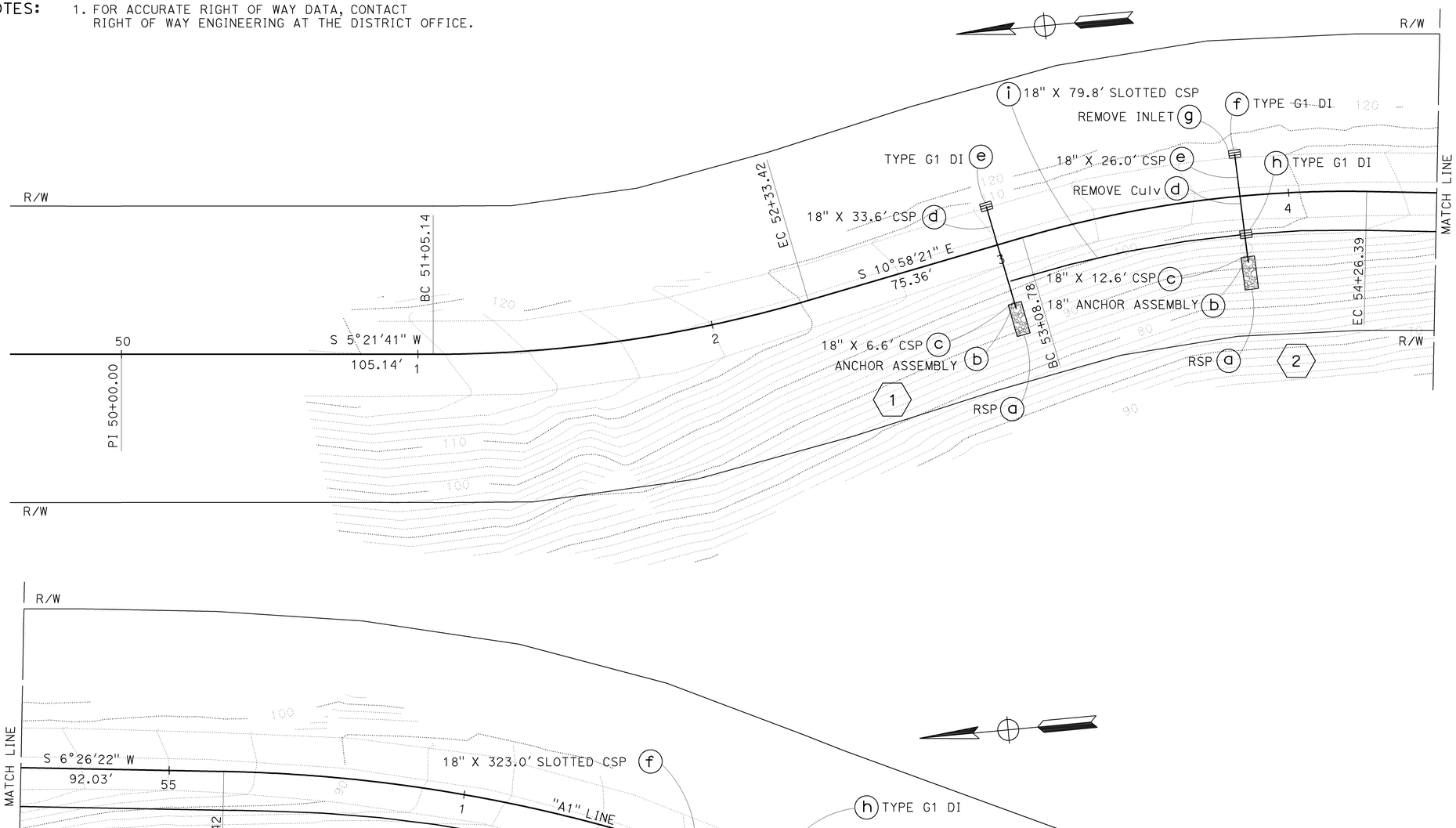

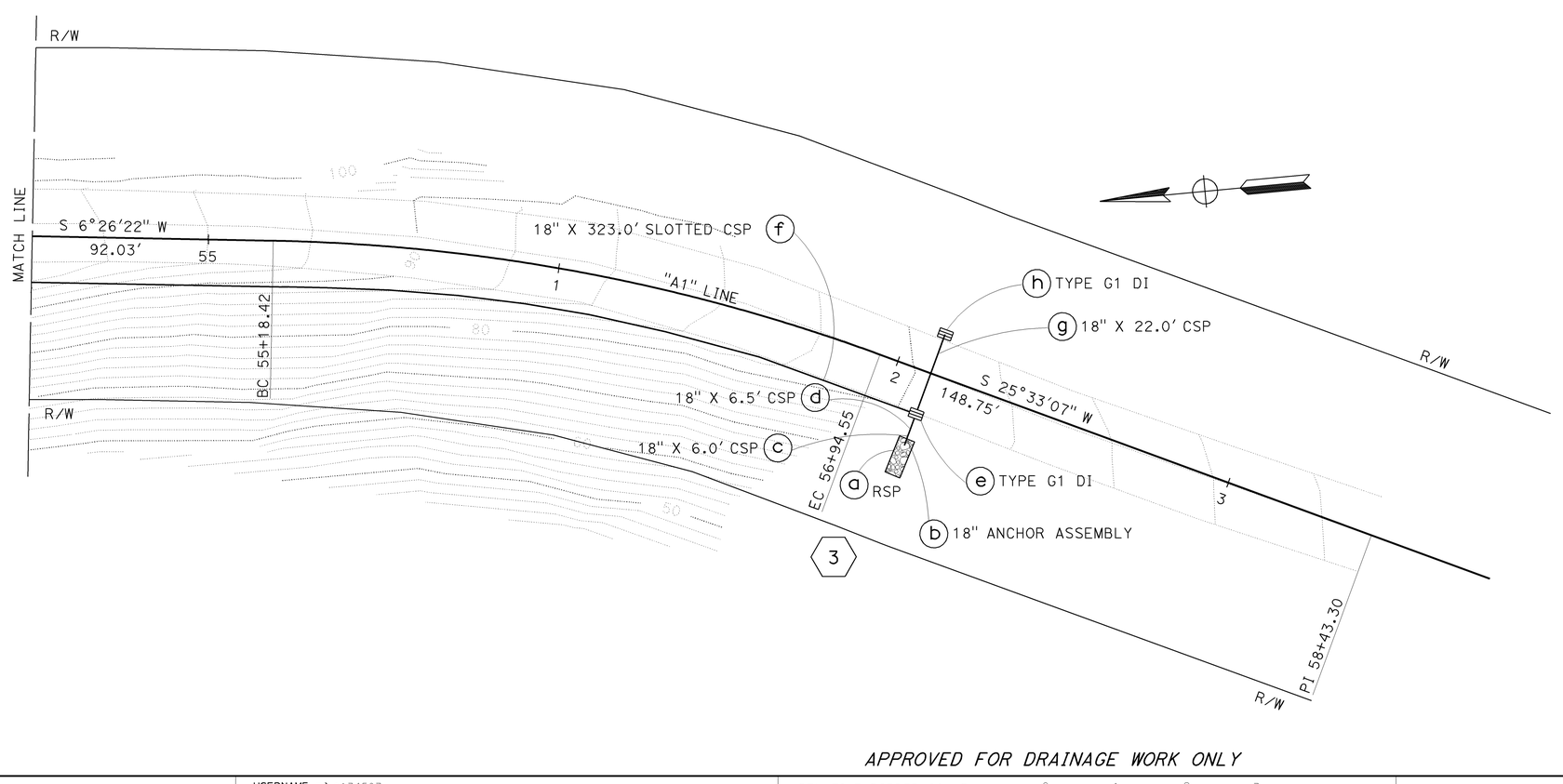

LEGEND:

(No.) DRAINAGE SYSTEM NUMBER

(x) DRAINAGE UNIT NUMBER

ABBREVIATIONS:

RSP ROCK SLOPE PROTECTION (FACING, METHOD B) (SEE DRAINAGE DETAILS)

APPROVED FOR DRAINAGE WORK ONLY

DRAINAGE PLAN

SCALE: 1"=20' **D-1**

REVISED BY | DATE REVISED
MICHAEL HUTZELMAN | HUAN CUNG
CALCULATED-DESIGNED BY | CHECKED BY
FUNCTIONAL SUPERVISOR: MOHAMMAD SADIQ
STATE OF CALIFORNIA - DEPARTMENT OF TRANSPORTATION
Caltrans® DIVISION OF ENGINEERING

LAST REVISION | DATE PLOTTED => 10-APR-2012 | TIME PLOTTED => 1024
00-00-00

BORDER LAST REVISED 7/2/2010 | USERNAME => s134507 | DGN FILE => 0300020566ia001.dgn | RELATIVE BORDER SCALE IS IN INCHES 0 1 2 3 | UNIT 0322 | PROJECT NUMBER & PHASE 03000205661

Dist	COUNTY	ROUTE	POST MILES TOTAL PROJECT	SHEET No.	TOTAL SHEETS
03	ED	193	23.4	10	52

REGISTERED CIVIL ENGINEER — 3-26-12 DATE

HUAN M. CUNG No. C74406 Exp. 9-30-13 CIVIL — REGISTERED PROFESSIONAL ENGINEER — STATE OF CALIFORNIA

3-26-12
PLANS APPROVAL DATE

THE STATE OF CALIFORNIA OR ITS OFFICERS OR AGENTS SHALL NOT BE RESPONSIBLE FOR THE ACCURACY OR COMPLETENESS OF SCANNED COPIES OF THIS PLAN SHEET.

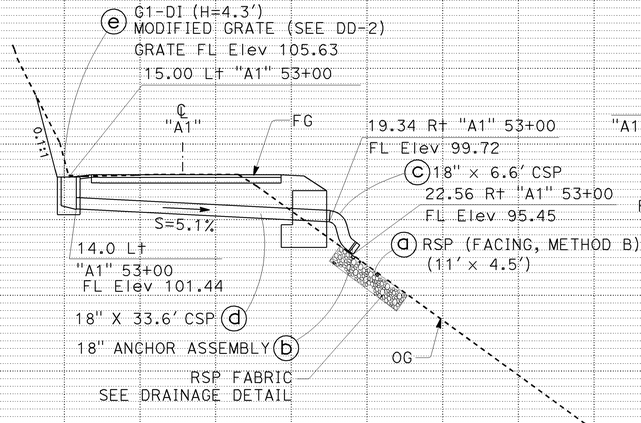

DRAINAGE SYSTEM No. 1

"A1" 53+00

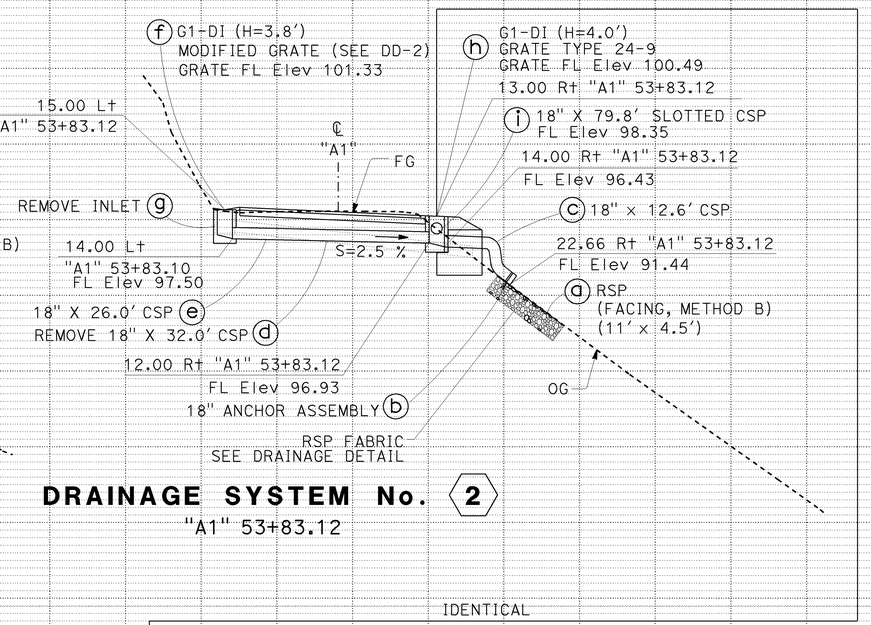

DRAINAGE SYSTEM No. 2

"A1" 53+83.12

IDENTICAL

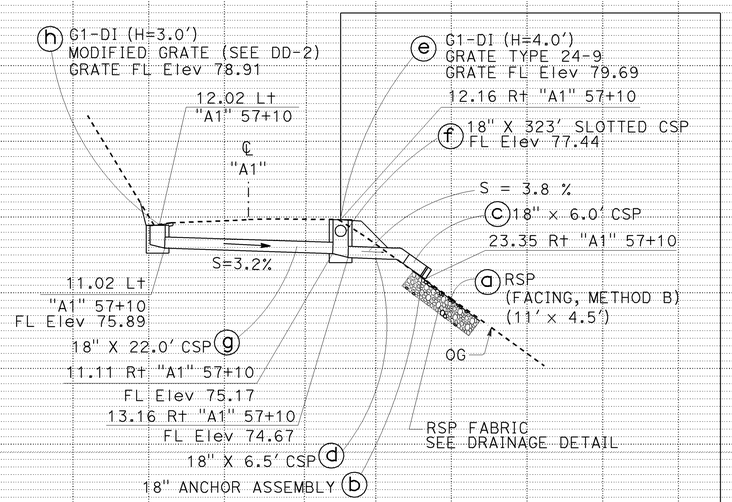

DRAINAGE SYSTEM No. 3

"A1" 57+10

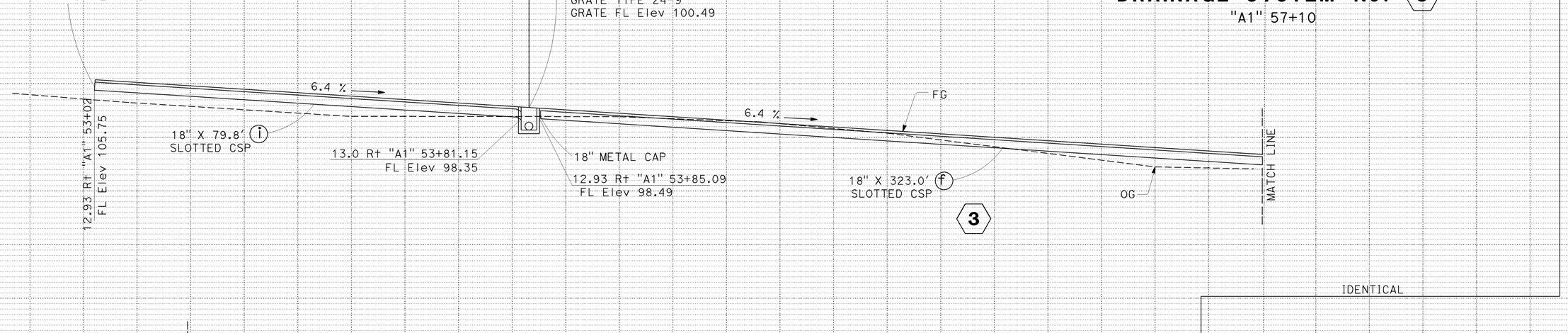

DRAINAGE PROFILE

SCALE: 1"=10′ Horiz
1"=10′ Vert

DP-1

REVISED BY | DATE REVISED

PHUONG VU | HUAN CUNG

CALCULATED-DESIGNED BY | CHECKED BY

FUNCTIONAL SUPERVISOR: MOHAMMAD SADIQ

STATE OF CALIFORNIA - DEPARTMENT OF TRANSPORTATION
Caltrans® DIVISION OF ENGINEERING

LAST REVISION 00-00-00 | DATE PLOTTED => 10-APR-2012 | TIME PLOTTED => 10:24

BORDER LAST REVISED 7/2/2010

USERNAME => s134507
DGN FILE => 0300020566ib001.dgn

RELATIVE BORDER SCALE IS IN INCHES 0 1 2 3

UNIT 0322

PROJECT NUMBER & PHASE 03000205661

Dist	COUNTY	ROUTE	POST MILES TOTAL PROJECT	SHEET No.	TOTAL SHEETS
03	ED	193	23.4	11	52

3-26-12
REGISTERED CIVIL ENGINEER DATE

HUAN M.CUNG No. C74406 Exp. 9-30-13 CIVIL
REGISTERED PROFESSIONAL ENGINEER
STATE OF CALIFORNIA

3-26-12
PLANS APPROVAL DATE

THE STATE OF CALIFORNIA OR ITS OFFICERS OR AGENTS SHALL NOT BE RESPONSIBLE FOR THE ACCURACY OR COMPLETENESS OF SCANNED COPIES OF THIS PLAN SHEET.

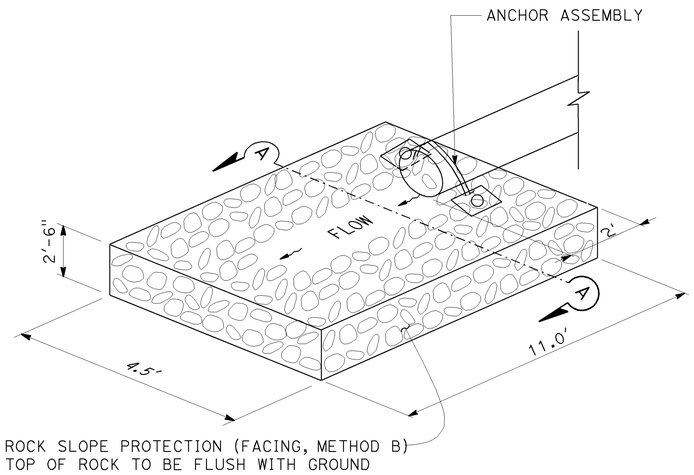

ROCK SLOPE PROTECTION (FACING, METHOD B)
TOP OF ROCK TO BE FLUSH WITH GROUND

ROCK ENERGY DISSIPATOR

"A1" 53+00.00
"A1" 53+83.12
"A1" 57+10.00

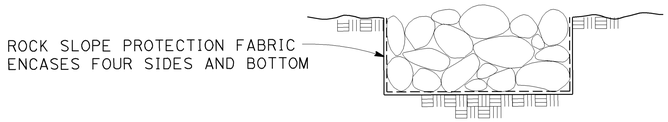

SECTION A-A

ROCK SLOPE PROTECTION (LIGHT, METHOD B)

NOTE:
REINFORCE AROUND PIPE OPENINGS IN GABION WALL WITH STANDARD TIE WIRE DETAILS AND FASTNERS (SEE Std PLAN D100A-B)

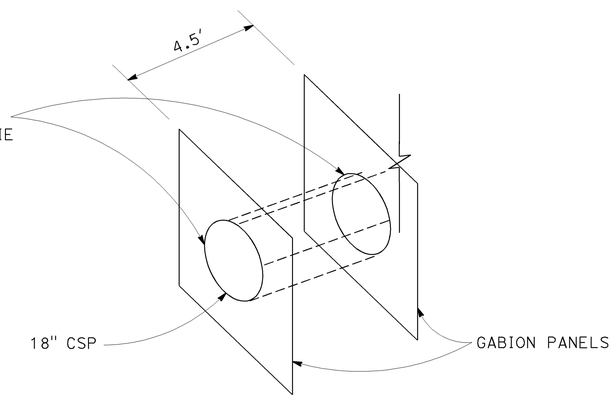

DRAINAGE SYSTEM NO. 1 , 2

"A1" 53+00.00
"A1" 53+83.12

NOTES:
1. EXACT LOCATION & NUMBERS TO BE DETERMINED BY THE ENGINEER.
2. FOR DETAILS NOT SHOWN SEE STANDARD PLAN A73B

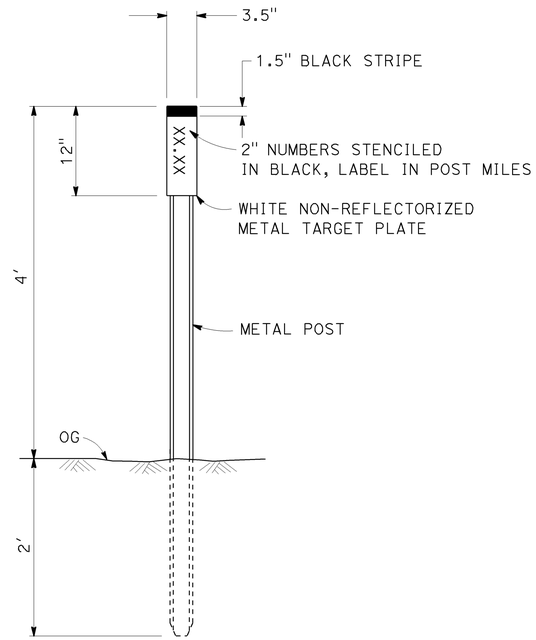

MARKER (CULVERT)

DRAINAGE DETAILS

NO SCALE

DD-1

REVISED BY	DATE REVISED

CALCULATED-DESIGNED BY: HUAN CUNG
CHECKED BY: HUAN CUNG
FUNCTIONAL SUPERVISOR: MOHAMMAD SADIQ

STATE OF CALIFORNIA - DEPARTMENT OF TRANSPORTATION
DIVISION OF ENGINEERING

LAST REVISION DATE PLOTTED => 10-APR-2012
00-00-00 TIME PLOTTED => 10:24

BORDER LAST REVISED 7/2/2010
USERNAME => s134507
DGN FILE => 0300020566ic001.dgn
RELATIVE BORDER SCALE IS IN INCHES 0 1 2 3
UNIT 0322
PROJECT NUMBER & PHASE 03000205661

Dist	COUNTY	ROUTE	POST MILES TOTAL PROJECT	SHEET No.	TOTAL SHEETS
03	ED	193	23.4	12	52

3-26-12
REGISTERED CIVIL ENGINEER DATE

HUAN M.CUNG No. C74406 Exp. 9-30-13 CIVIL
REGISTERED PROFESSIONAL ENGINEER
STATE OF CALIFORNIA

3-26-12
PLANS APPROVAL DATE

THE STATE OF CALIFORNIA OR ITS OFFICERS OR AGENTS SHALL NOT BE RESPONSIBLE FOR THE ACCURACY OR COMPLETENESS OF SCANNED COPIES OF THIS PLAN SHEET.

NOTES:

1. 3" OD × 2" ID STEEL TUBE CONFORM TO ASTM A513 TYPE 5.
2. ½" × 3½" STEEL BAR CONFORM TO ASTM A 36.
3. FOR DETAILS NOT SHOWN SEE STANDARD RSP D77A.
4. GRATES ARE TO BE GALVANIZED.
5. GRATES ARE TO BE INSTALLED WITH THE 3" TUBES PERPENDICULAR TO THE ROADWAY.

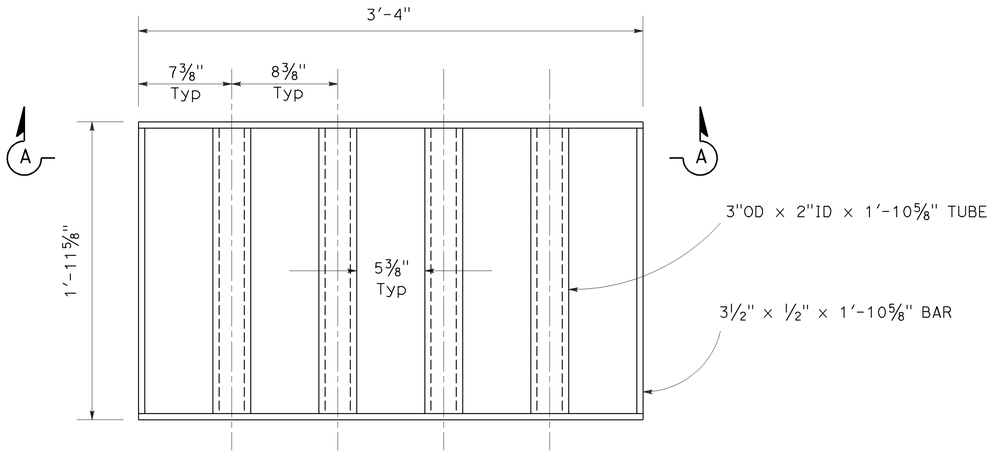

PLAN

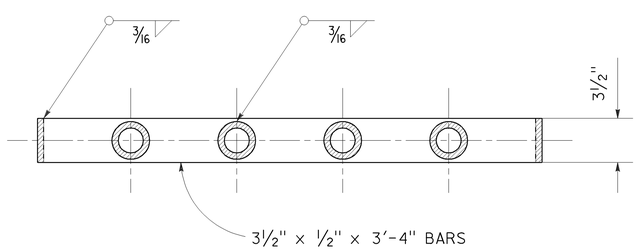

SECTION A-A

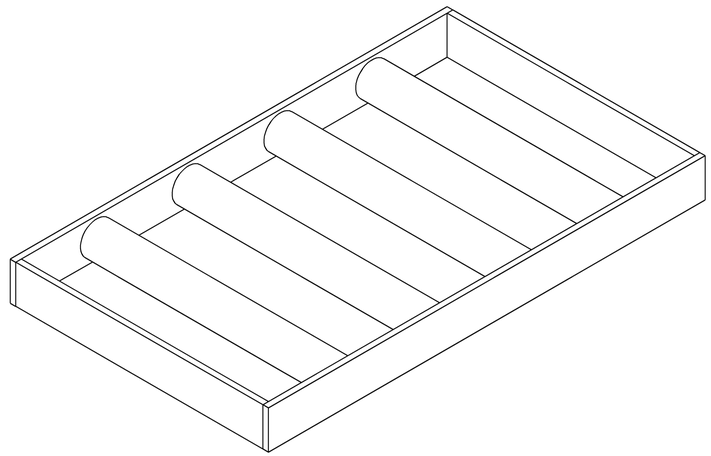

ISOMETRIC

MODIFIED GRATE

1 e
2 f
3 h

DRAINAGE DETAILS

NO SCALE

DD-2

STATE OF CALIFORNIA - DEPARTMENT OF TRANSPORTATION
DIVISION OF ENGINEERING
FUNCTIONAL SUPERVISOR: MOHAMMAD SADIQ
CALCULATED-DESIGNED BY: HUAN CUNG
CHECKED BY: HUAN CUNG
REVISED BY | DATE REVISED

LAST REVISION 00-00-00
DATE PLOTTED => 10-APR-2012
TIME PLOTTED => 10:24

Dist	COUNTY	ROUTE	POST MILES TOTAL PROJECT	SHEET No.	TOTAL SHEETS
03	ED	193	23.4	13	52

3-26-12
REGISTERED CIVIL ENGINEER DATE

HUAN M. CUNG No. C74406 Exp. 9-30-13 CIVIL
REGISTERED PROFESSIONAL ENGINEER
STATE OF CALIFORNIA

3-26-12
PLANS APPROVAL DATE

THE STATE OF CALIFORNIA OR ITS OFFICERS OR AGENTS SHALL NOT BE RESPONSIBLE FOR THE ACCURACY OR COMPLETENESS OF SCANNED COPIES OF THIS PLAN SHEET.

NOTES:
1. ALL CULVERT JOINTS SHALL BE STANDARD
2. LENGTHS OF PIPES SHALL BE VERIFIED IN THE FIELD BY THE CONTRACTOR

DRAINAGE QUANTITIES

DRAINAGE PLAN No.	DRAINAGE SYSTEM No. ⬡	DRAINAGE UNIT ◯	REMOVE CULVERT LF	REMOVE INLET EA	18" SLOTTED CORRUGATED STEEL PIPE (0.079" THICK) LF	18" CORRUGATED STEEL PIPE (0.109" THICK) LF	MISCELLANEOUS IRON AND STEEL LB	MINOR CONCRETE (MINOR STRUCTURE) CY	ROCK SLOPE PROTECTION (FACING, METHOD B) CY	ROCK SLOPE PROTECTION FABRIC (CLASS 8) SQYD	(N) HEIGHT OF INLET "H" LF	(N) FRAME AND GRATE (TYPE 24-9) EA	(N) MODIFIED GRATE EA	18" ANCHOR ASSEMBLY EA	DESCRIPTION	STATION	DRAINAGE PLAN No.	DRAINAGE SYSTEM No. ⬡	DRAINAGE UNIT ◯
1	1	a							4.58	24.4					RSP (FACING, METHOD B)	"A1" 53+00.00	1	1	a
		b												1	18" ANCHOR ASSEMBLY				b
		c				6.6									18" 45° ELBOW; 18" 90° ELBOW; 18" CSP				c
		d				32.0									18" X 32.0′ CSP				d
		e					263	1.24			4.3		1		TYPE G1 DRAINAGE WITH MODIFIED GRATE INLET				e
1	2	a							4.58	24.4					RSP (FACING, METHOD B)	"A1" 53+83.12	1	2	a
		b												1	18" ANCHOR ASSEMBLY				b
		c				12.6									18" 45° ELBOW; 18" 90° ELBOW; 18" CSP				c
		d	32												REMOVE EXISTING CULVERT				d
		e				25.6									18" X 25.6′ CSP				e
		f					263	1.13			3.8		1		TYPE G1 DRAINAGE WITH MODIFIED GRATE INLET				f
		g		1											REMOVE EXISTING INLET				g
		h					263	1.17			4.0	1			TYPE G1 DRAINAGE INLET				h
		i			79.8										SLOTTED 18" CSP; 18" METAL CAP				i
1	3	a							4.58	24.4					RSP (FACING, METHOD B)	"A1" 57+10.00	1	3	a
		b												1	18" ANCHOR ASSEMBLY				b
		c				6.0									18" 45° ELBOW; 18" CSP				c
		d				6.5									18" X 6.5′ CSP				d
		e					263	1.17			4.0	1			TYPE G1 DRAINAGE INLET				e
		f			323.0										SLOTTED 18" CSP; 18" METAL CAP				f
		g				22.0									18" X 22.0′ CSP				g
		h					263	0.95			3.0		1		TYPE G1 DRAINAGE WITH MODIFIED GRATE INLET				h
SUBTOTAL												2	3						
TOTAL			32	1	402.8	111.3	1315	5.66	13.74	73.2				3					

(N) NOT A SEPARATE PAY ITEM, FOR INFORMATION ONLY.

CALCULATED-DESIGNED BY: MICHAEL HUTZELMAN
CHECKED BY: HUAN CUNG
FUNCTIONAL SUPERVISOR: MOHAMMAD SADIQ
REVISED BY
DATE REVISED
STATE OF CALIFORNIA - DEPARTMENT OF TRANSPORTATION
DIVISION OF ENGINEERING

DRAINAGE QUANTITIES

DQ-1

LAST REVISION | DATE PLOTTED => 10-APR-2012 | 00-00-00 | TIME PLOTTED => 10:24

Dist	COUNTY	ROUTE	POST MILES TOTAL PROJECT	SHEET No.	TOTAL SHEETS
03	ED	193	23.4	14	52

3-26-12
REGISTERED CIVIL ENGINEER DATE

HUAN M. CUNG No. C74406 Exp. 9-30-13 CIVIL — REGISTERED PROFESSIONAL ENGINEER — STATE OF CALIFORNIA

3-26-12
PLANS APPROVAL DATE

THE STATE OF CALIFORNIA OR ITS OFFICERS OR AGENTS SHALL NOT BE RESPONSIBLE FOR THE ACCURACY OR COMPLETENESS OF SCANNED COPIES OF THIS PLAN SHEET.

STATIONARY MOUNTED CONSTRUCTION AREA SIGNS

SIGN LETTER	SIGN CODE		PANEL SIZE	SIGN MESSAGE	NUMBER OF POST AND SIZE	NUMBER OF SIGNS
	FEDERAL	CALIFORNIA				
(A)	W20-1	C23	48" x 48"	ROAD WORK AHEAD	1-6" x 6"	2
(B)	G20-2	C14	36" x 18"	END ROAD WORK	1-4" x 4"	2

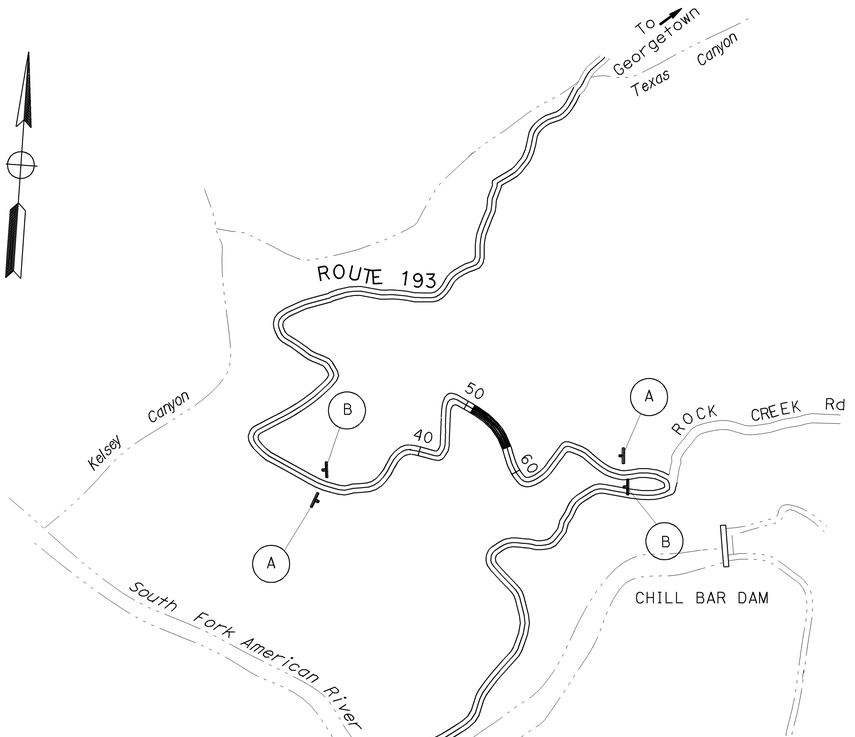

LEGEND:

(No.) CONSTRUCTION AREA SIGN LETTER

SIGN - SINGLE POST

NOTES:

1. LOCATION OF CONSTRUCTION AREA SIGNS ARE APPROPRIATE. EXACT SIGN LOCATIONS WILL BE DETERMINED BY THE ENGINEER.

APPROVED FOR CONSTRUCTION AREA SIGN WORK ONLY

CONSTRUCTION AREA SIGNS

NO SCALE

CS-1

REVISED BY	DATE REVISED

CALCULATED-DESIGNED BY
PHUONG VU

CHECKED BY
HUAN CUNG

FUNCTIONAL SUPERVISOR
MOHAMMAD SADIQ

STATE OF CALIFORNIA - DEPARTMENT OF TRANSPORTATION
Caltrans® DIVISION OF ENGINEERING

LAST REVISION 00-00-00
DATE PLOTTED => 10-APR-2012
TIME PLOTTED => 10:24

Dist	COUNTY	ROUTE	POST MILES TOTAL PROJECT	SHEET No.	TOTAL SHEETS
03	ED	193	23.4	15	52

3-26-12
REGISTERED CIVIL ENGINEER DATE

HUAN M.CUNG No. C74406 Exp. 9-30-13 CIVIL
REGISTERED PROFESSIONAL ENGINEER
STATE OF CALIFORNIA

3-26-12
PLANS APPROVAL DATE

THE STATE OF CALIFORNIA OR ITS OFFICERS OR AGENTS SHALL NOT BE RESPONSIBLE FOR THE ACCURACY OR COMPLETENESS OF SCANNED COPIES OF THIS PLAN SHEET.

NOTES:
1. FOR ACCURATE RIGHT OF WAY DATA, CONTACT RIGHT OF WAY ENGINEERING AT THE DISTRICT OFFICE.
2. TEMPORARY TRAFFIC STRIPES (PAINT) TO BE REMOVED AT COMPLETION OF STAGE.

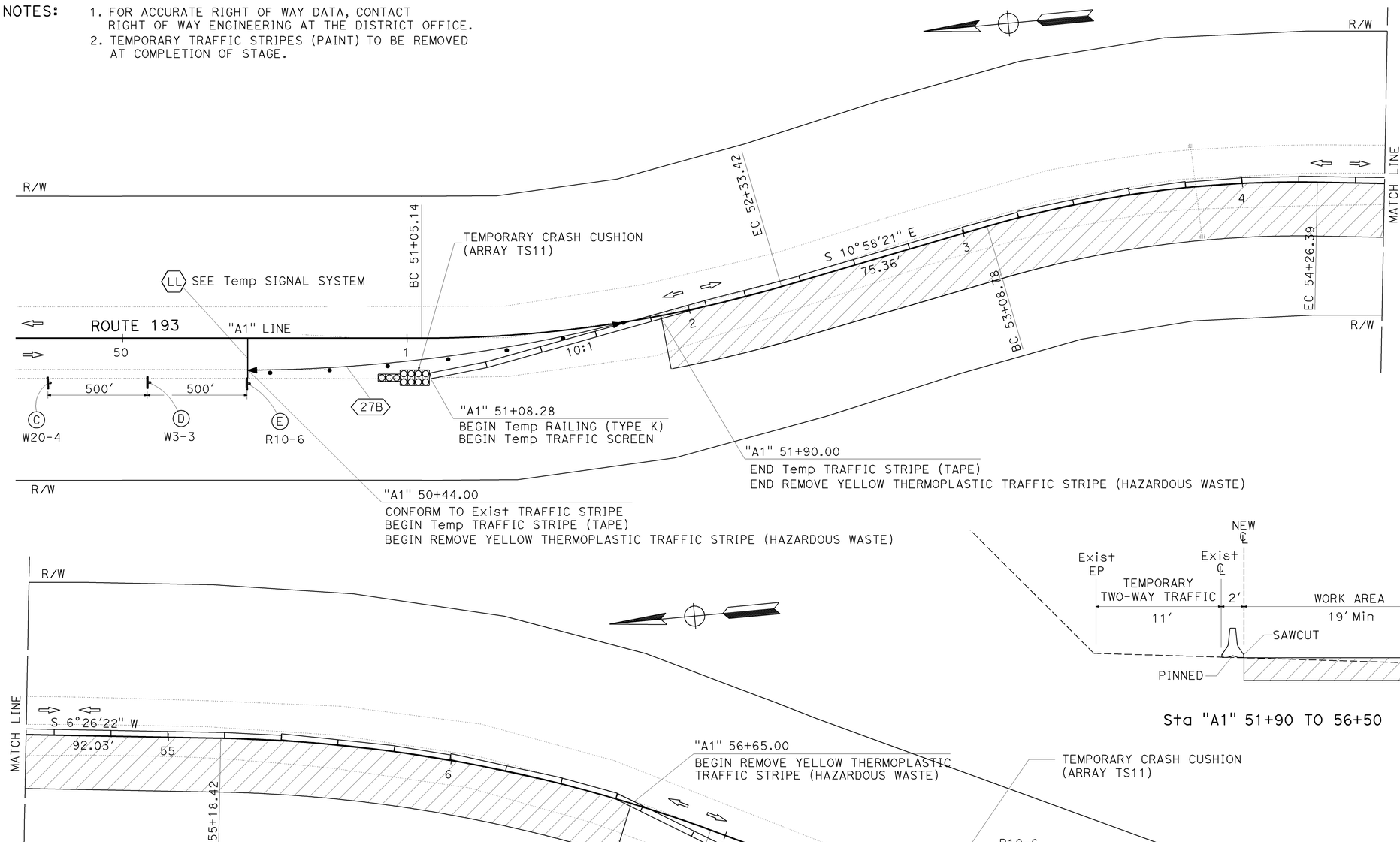

LEGEND:

- WORK AREA
- Temp RAILING (TYPE K)
- DIRECTION OF TRAFFIC
- (X) ADDITIONAL STATIONARY MOUNTED CONSTRUCTION AREA SIGN
- • CHANNELIZER (SURFACE MOUNTED) S=20' @ CENTER
- LIMIT OF TRAFFIC STRIPING PATTERN
- CONSTRUCTION AREA SIGN
- No. Temp TRAFFIC STRIPE (TAPE)
- LL LIMIT LINE (TAPE)

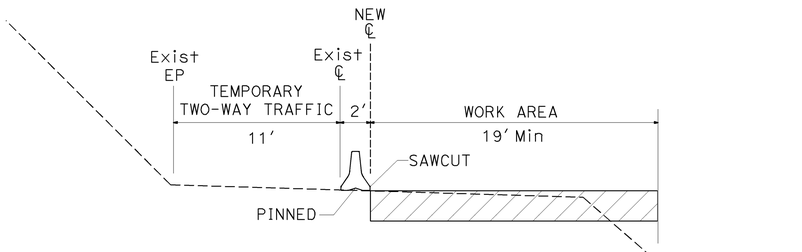

Sta "A1" 51+90 TO 56+50

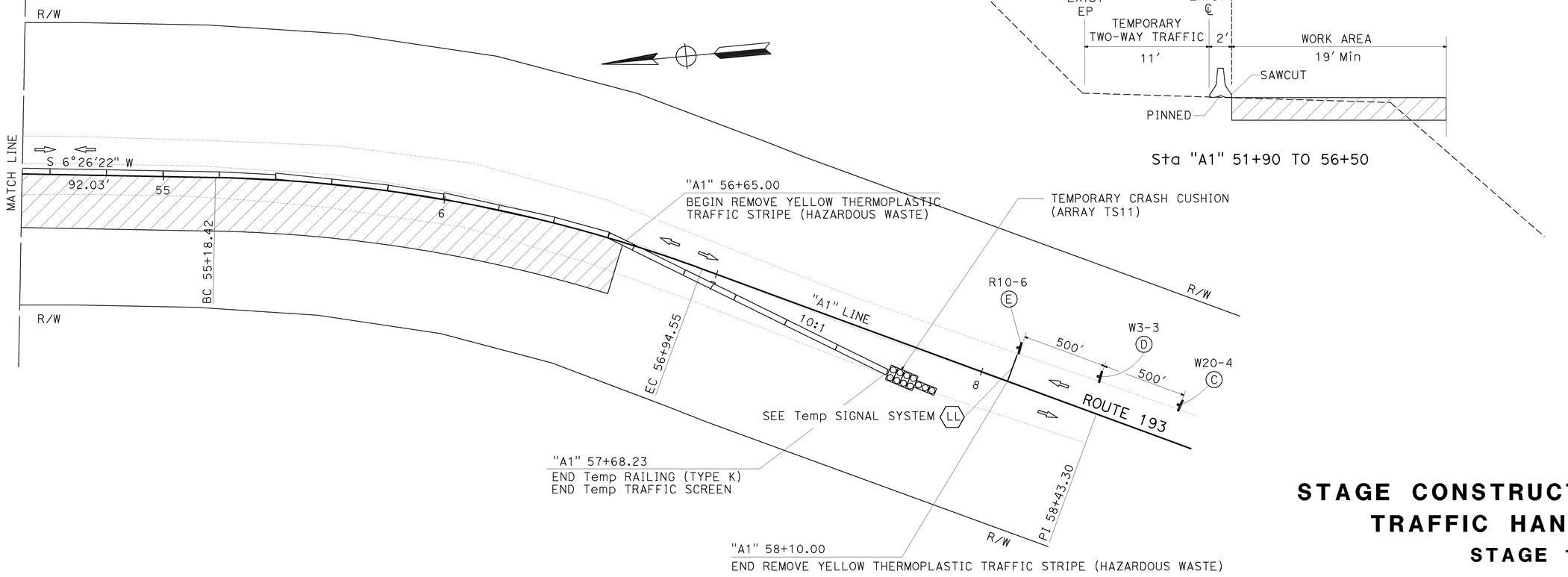

APPROVED FOR STAGE CONSTRUCTION AND TRAFFIC HANDLING WORK ONLY

STAGE CONSTRUCTION AND TRAFFIC HANDLING

STAGE 1

SCALE: 1"=20'

SC-1

REVISED BY | DATE REVISED
CALCULATED-DESIGNED BY: HUAN CUNG
CHECKED BY: HUAN CUNG
FUNCTIONAL SUPERVISOR: MOHAMMAD U. SADIQ
STATE OF CALIFORNIA - DEPARTMENT OF TRANSPORTATION
Caltrans® DIVISION OF ENGINEERING

LAST REVISION | DATE PLOTTED => 10-APR-2012
00-00-00 | TIME PLOTTED => 10:24

Dist	COUNTY	ROUTE	POST MILES TOTAL PROJECT	SHEET No.	TOTAL SHEETS
03	ED	193	23.4	16	52

3-26-12
REGISTERED CIVIL ENGINEER DATE

3-26-12
PLANS APPROVAL DATE

REGISTERED PROFESSIONAL ENGINEER
HUAN M.CUNG
No. C74406
Exp. 9-30-13
CIVIL
STATE OF CALIFORNIA

THE STATE OF CALIFORNIA OR ITS OFFICERS OR AGENTS SHALL NOT BE RESPONSIBLE FOR THE ACCURACY OR COMPLETENESS OF SCANNED COPIES OF THIS PLAN SHEET.

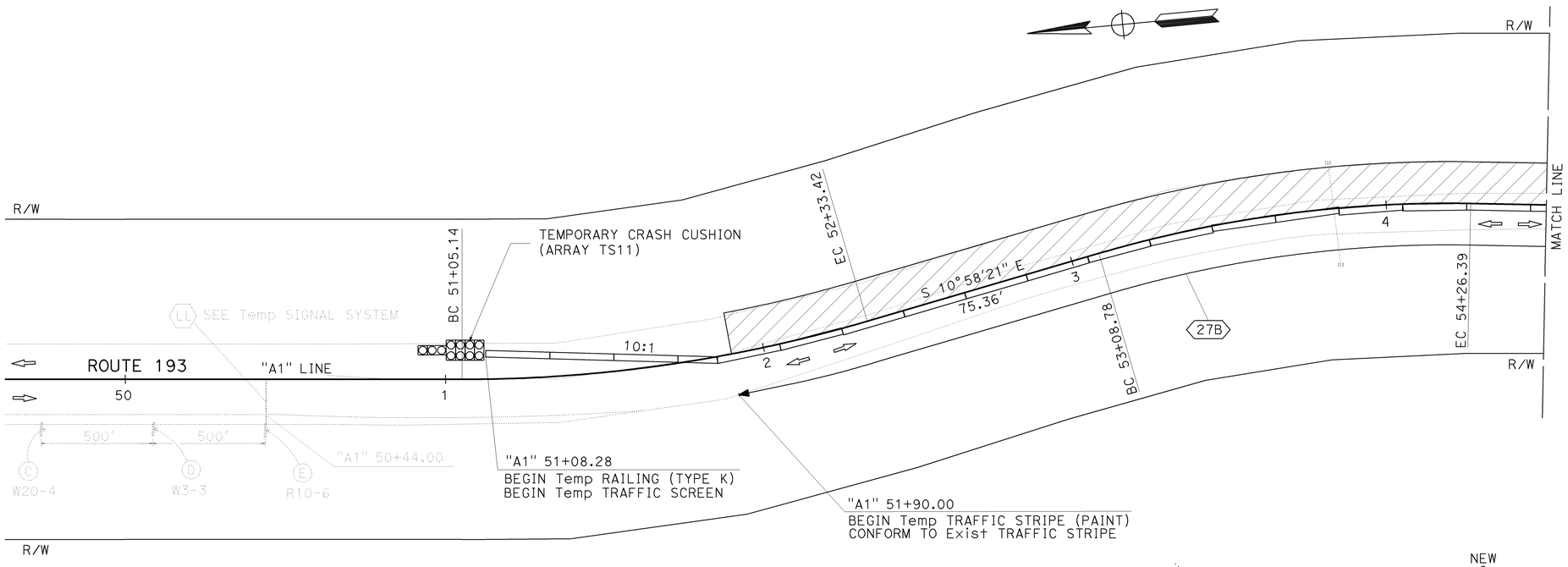

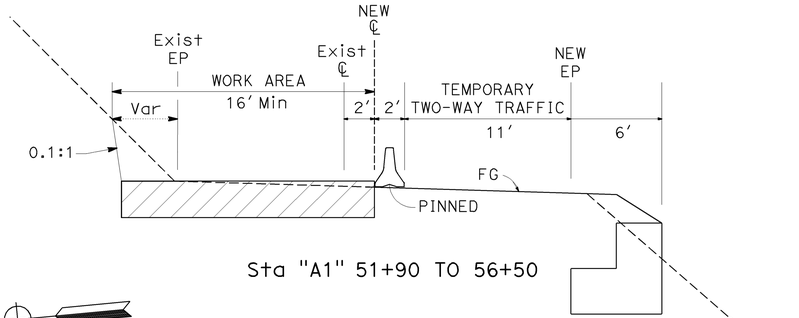

Sta "A1" 51+90 TO 56+50

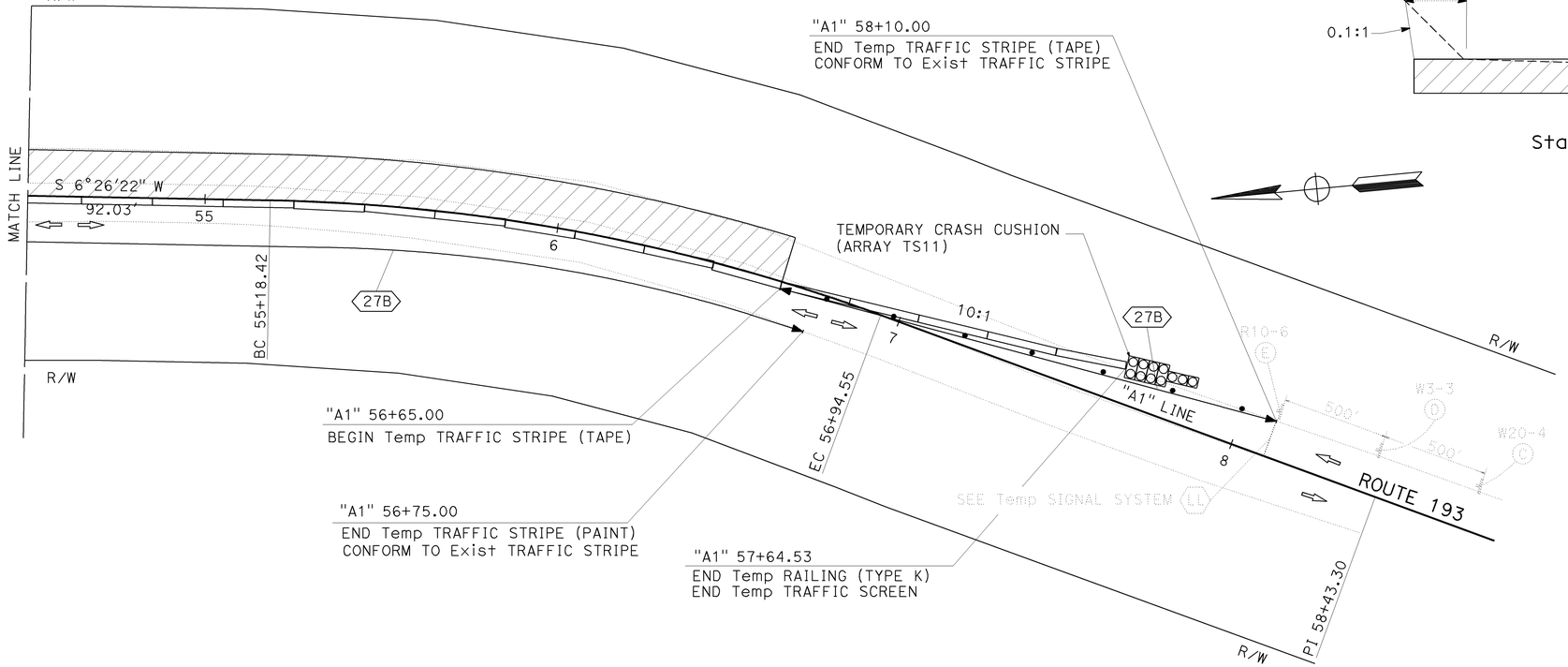

STAGE CONSTRUCTION AND TRAFFIC HANDLING

STAGE 2

SCALE: 1"=20'

SC-2

APPROVED FOR STAGE CONSTRUCTION AND TRAFFIC HANDLING WORK ONLY

REVISED BY | DATE REVISED
HUAN CUNG | HUAN CUNG
CALCULATED-DESIGNED BY | CHECKED BY
FUNCTIONAL SUPERVISOR: MOHAMMAD SADIQ

STATE OF CALIFORNIA - DEPARTMENT OF TRANSPORTATION
Caltrans® DIVISION OF ENGINEERING

LAST REVISION | DATE PLOTTED => 10-APR-2012
00-00-00 | TIME PLOTTED => 10:24

BORDER LAST REVISED 7/2/2010 | USERNAME => s134507 | DGN FILE => 0300020566ma002.dgn | RELATIVE BORDER SCALE IS IN INCHES 0 1 2 3 | UNIT 0322 | PROJECT NUMBER & PHASE 03000205661

NOTES:

1. FOR ADDITIONAL CONSTRUCTION AREA SIGNS, SEE CS-1
2. EXACT SIGN LOCATIONS TO BE DETERMINED BY THE ENGINEER.

Dist	COUNTY	ROUTE	POST MILES TOTAL PROJECT	SHEET No.	TOTAL SHEETS
03	ED	193	23.4	17	52

3-26-12
REGISTERED CIVIL ENGINEER DATE

HUAN M.CUNG No. C74406 Exp. 9-30-13 CIVIL
REGISTERED PROFESSIONAL ENGINEER
STATE OF CALIFORNIA

3-26-12
PLANS APPROVAL DATE

THE STATE OF CALIFORNIA OR ITS OFFICERS OR AGENTS SHALL NOT BE RESPONSIBLE FOR THE ACCURACY OR COMPLETENESS OF SCANNED COPIES OF THIS PLAN SHEET.

TEMPORARY RAILING (TYPE K) AND TRAFFIC SCREEN

LOCATION	TEMP RAILING (TYPE K)	TEMP TRAFFIC SCREEN	NOTES
	LF	LF	
"A1" 51+08.28 TO 57+68.23	660	660	STAGE 1
"A1" 51+08.28 TO 57+64.53	660	660	STAGE 2
GRAND TOTAL	1320	1320	

TEMPORARY TRAFFIC STRIPE

LOCATION	TEMPORARY TRAFFIC STRIPE(TAPE)	TEMPORARY TRAFFIC STRIPE(PAINT)	NOTES
	LF	LF	
"A1" 50+44.00 TO 51+90.00	146		STAGE 1
"A1" 51+90.00 TO 56+75.00		485	STAGE 2
"A1" 56+65.00 TO 58+10.00	145		STAGE 2
TOTAL	291	485	

REMOVE TRAFFIC STRIPE

LOCATION	REMOVE YELLOW THERMOPLASTIC TRAFFIC STRIPE (HAZARDOUS WASTE)	NOTES
	LF	
"A1" 50+44.00 TO 51+90.00	146	STAGE 1
"A1" 56+65.00 TO 58+10.00	145	STAGE 1
TOTAL	291	

TEMPORARY CRASH CUSHION MODULE

LOCATION	STAGE	ARRAY TYPE	TEMPORARY CRASH CUSHION MODULE	REMARKS
			EA	
"A1" 51+08.28	1	TS11	11	FOR APPROACH END OF TEMPORARY RAILING (TYPE K)
"A1" 57+68.23	1	TS11	11	FOR APPROACH END OF TEMPORARY RAILING (TYPE K)
"A1" 51+08.28	2	TS11	11	FOR APPROACH END OF TEMPORARY RAILING (TYPE K)
"A1" 57+64.53	2	TS11	11	FOR APPROACH END OF TEMPORARY RAILING (TYPE K)
TOTAL			44	

ADDITIONAL STATIONARY MOUNTED CONSTRUCTION AREA SIGNS

TYPE	SIGN MESSAGE	PANEL SIZE	No. OF POST & SIZE	STAGE 1	STAGE 2
		IN x IN		NUMBER OF SIGNS	NUMBER OF SIGNS
(C) W20-4	ONE LANE AHEAD	48 x 48	1-6" x 6"	2	2
(D) W3-3	SIGNAL AHEAD	48 x 48	1-6" x 6"	2	2
(E) R10-6	STOP HERE ON RED	24 x 36	1-4" x 4"	2	2

CHANNELIZER (SURFACE MOUNTED)

LOCATION	CHANNELIZER (SURFACE MOUNTED)
	EA
"A1" 50+44.00 TO 51+90.00	7
"A1" 56+65.00 TO 58+10.00	7
TOTAL	14

TEMPORARY PAVEMENT MARKING (TAPE)

LOCATION	TEMPORARY PAVEMENT MARKING (TAPE)	NOTES
	SQFT	
"A1" 50+44.00	11	STAGE 1
"A1" 58+10.00	11	STAGE 1
"A1" 50+44.00	11	STAGE 2
"A1" 58+10.00	11	STAGE 2
TOTAL	44	

STAGE CONSTRUCTION QUANTITIES

SCQ-1

REVISED BY | DATE REVISED
HUAN CUNG | HUAN CUNG
CALCULATED-DESIGNED BY | CHECKED BY
FUNCTIONAL SUPERVISOR: MOHAMMAD SADIQ
STATE OF CALIFORNIA - DEPARTMENT OF TRANSPORTATION
Caltrans® DIVISION OF ENGINEERING

LAST REVISION DATE PLOTTED => 10-APR-2012
00-00-00 TIME PLOTTED => 10:24

BORDER LAST REVISED 7/2/2010 | USERNAME => s134507 | DGN FILE => 0300020566mc001.dgn | RELATIVE BORDER SCALE IS IN INCHES 0 1 2 3 | UNIT 0322 | PROJECT NUMBER & PHASE 03000205661

NOTES: 1. FOR ACCURATE RIGHT OF WAY DATA, CONTACT RIGHT OF WAY ENGINEERING AT THE DISTRICT OFFICE.

Dist	COUNTY	ROUTE	POST MILES TOTAL PROJECT	SHEET No.	TOTAL SHEETS
03	ED	193	23.4	18	52

3-26-12
REGISTERED CIVIL ENGINEER DATE

HUAN M.CUNG No. C74406 Exp. 9-30-13 CIVIL — REGISTERED PROFESSIONAL ENGINEER — STATE OF CALIFORNIA

3-26-12
PLANS APPROVAL DATE

THE STATE OF CALIFORNIA OR ITS OFFICERS OR AGENTS SHALL NOT BE RESPONSIBLE FOR THE ACCURACY OR COMPLETENESS OF SCANNED COPIES OF THIS PLAN SHEET.

LEGEND:

- LIMIT OF TRAFFIC STRIPING PATTERN
- No. PAVEMENT DELINEATION DETAIL NUMBER.
- DELINEATOR (CLASS 2)
- S= DELINEATOR SPACING

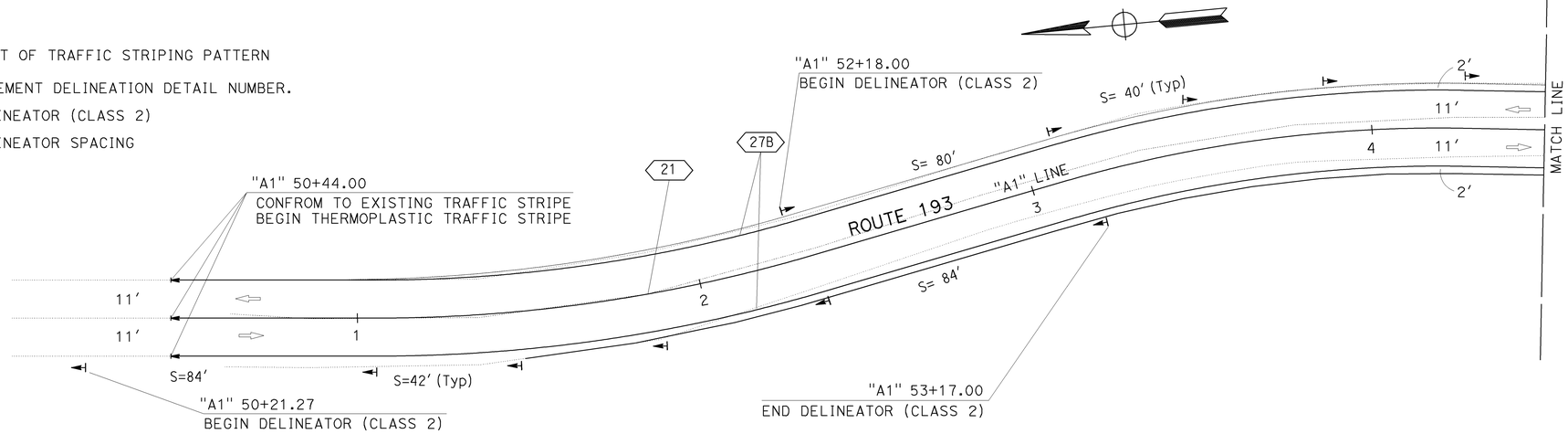

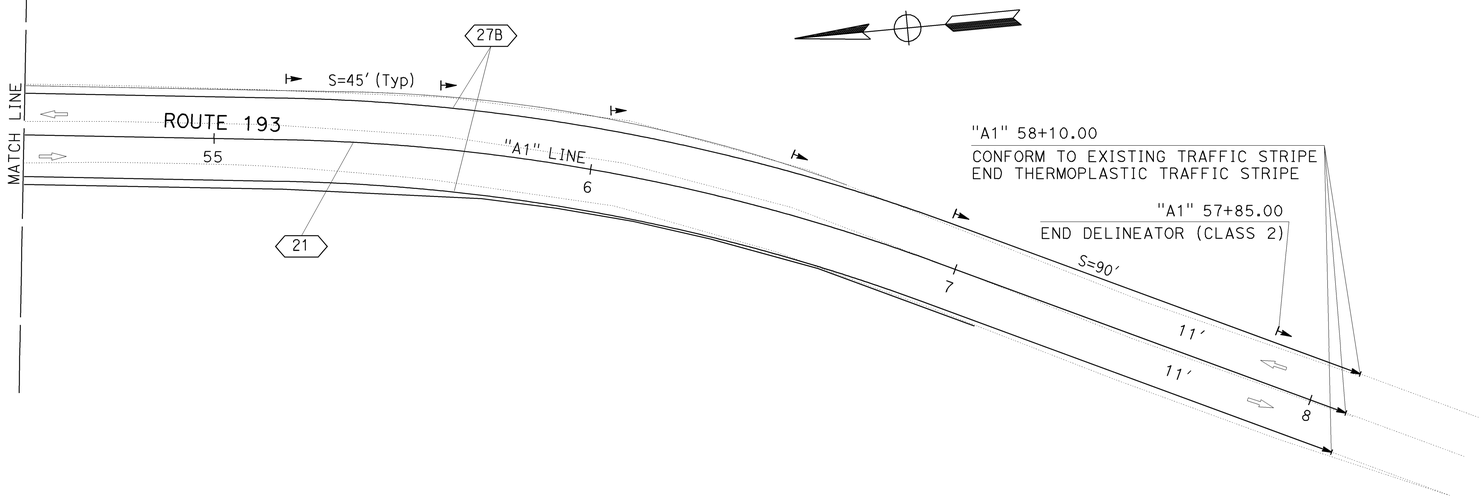

TRAFFIC STRIPE

STATION	4" THERMOPLASTIC TRAFFIC STRIPE	
	DETAIL 27B	DETAIL 21
	LF	LF
"A1" 50+44 TO 58+10	1532	1532
TOTAL	3064	

DELINEATOR (CLASS 2)

STATION	TYPE E
	EA
"A1" 51+21.27 TO 53+17	6
"A1" 52+18 TO 57+85	11
TOTAL	17

APPROVED FOR PAVEMENT DELINEATION AND SIGN WORK ONLY

PAVEMENT DELINEATION PLAN AND QUANTITIES

SCALE: 1"=20'

PD-1

REVISED BY | DATE REVISED
NANCY XU | HUAN CUNG
CALCULATED-DESIGNED BY | CHECKED BY
FUNCTIONAL SUPERVISOR: MOHAMMAD SADIQ
STATE OF CALIFORNIA - DEPARTMENT OF TRANSPORTATION
Caltrans® DIVISION OF ENGINEERING

LAST REVISION | DATE PLOTTED => 10-APR-2012
00-00-00 | TIME PLOTTED => 10:24

BORDER LAST REVISED 7/2/2010 | USERNAME => s134507 | DGN FILE => 0300020566na001.dgn | RELATIVE BORDER SCALE IS IN INCHES 0 1 2 3 | UNIT 0322 | PROJECT NUMBER & PHASE 03000205661

Dist	COUNTY	ROUTE	POST MILES TOTAL PROJECT	SHEET No.	TOTAL SHEETS
03	ED	193	23.4	19	52

REGISTERED CIVIL ENGINEER — 3-26-12 DATE

HUAN M. CUNG No. C74406 Exp. 9-30-13 CIVIL — REGISTERED PROFESSIONAL ENGINEER — STATE OF CALIFORNIA

3-26-12
PLANS APPROVAL DATE

THE STATE OF CALIFORNIA OR ITS OFFICERS OR AGENTS SHALL NOT BE RESPONSIBLE FOR THE ACCURACY OR COMPLETENESS OF SCANNED COPIES OF THIS PLAN SHEET.

GABION

STATION LIMITS	(N) GABION HEIGHT	GABION	GABION EXCAVATION		(N) RSP FABRIC	(N) STRUCTURE BACKFILL	IMPORTED BORROW
			(N) STRUCTURE EXCAVATION	(N) SUB EXCAVATION			
	LF	CY	CY	CY	SQYD	CY	CY
"A1" 51+90 TO 52+08	3.0	12	15		34		
"A1" 52+08 TO 52+26	6.0	21	16		49		
"A1" 52+26 TO 53+82	7.5	208	116		503		
"A1" 53+82 TO 54+06	6.0	28	30		65		
"A1" 54+06 TO 54+54	4.5	48	34	132	123	132	276
"A1" 54+54 TO 54+66	6.0	14	9		33		
"A1" 54+66 TO 55+26	7.5	80	54		193		
"A1" 55+26 TO 56+52	6.0	147	101		343		
"A1" 56+52 TO 56+64	4.5	12	11		31		
"A1" 56+64 TO 57+09							6
SUBTOTAL		570	386	132	1374	132	282
TOTAL		570					282

(N) - NOT A SEPARATE PAY ITEM, FOR INFORMATION ONLY

PLACE HMA DIKE

STATION LIMITS	PLACE HMA DIKE		HMA
	(TYPE C)	(TYPE F)	
	LF	LF	TON
"A1" 51+46.00 TO 51+90.00	44		0.41
"A1" 51+90.00 TO 56+65.00		475	7.68
"A1" 56+65.00 TO 57+09.00	44		0.41
SUBTOTAL	88	475	8.50 *
TOTAL	88	475	

* SEE ROADWAY AND EARTHWORK SUMMARY

ROADWAY AND EARTHWORK SUMMARY

STATION LIMITS	HOT MIX ASPHALT (TYPE A)	CLASS 2 AGGREGATE BASE	ROADWAY EXCAVATION	SHOULDER BACKING **	PLACE HOT MIX ASPHALT (Misc AREA)	TACK COAT
	TON	CY	CY	CY	SQYD	TON
"A1" 51+90 TO 56+65	326.0	348	435	17		0.30
"A1" 51+65 TO 57+09			2	2		
DIKES	8.5					
HMA DITCH	*34.0				335	
TOTAL	368.5	348	437	19**	335	0.30

(N) NOT A SEPARATE PAY ITEM, FOR INFORMATION ONLY.
*HMA QUANTITY FOR PLACE HMA (Misc AREA)
IS ACCOUNTED FOR AS HMA (TYPE A)
**SHOULDER BACKING APPLIES TO Rt "A1" LINE.

METAL BEAM GUARD RAILING

STATION LIMITS	MBGR (WOOD POST)	IN-LINE TERMINAL SYSTEM (TYPE X-TENTION)	GUARD RAILING WEED CONTROL MAT (FIBER)
	LF	EA	SQYD
"A1" 51+90.00 TO 56+65.00	475	2	160
TOTAL	475	2	160

MARKERS (CULVERT)

STATION LIMITS	POST MILE (Approx.)	EA
"A1" 53+00.00	23.35	1
"A1" 53+83.12	23.40	1
"A1" 57+10.00	23.46	1
TOTAL		3

TEMPORARY BMP'S

DESCRIPTION	QUANTITY	UNIT
TEMPORARY DRAINAGE INLET PROTECTION	6	EA
TOTAL	6	

SUMMARY OF QUANTITIES

Q-1

REVISED BY | DATE REVISED
CALCULATED-DESIGNED BY | CHECKED BY
MICHAEL HUTZELMAN | HUAN CUNG
FUNCTIONAL SUPERVISOR | MOHAMMAD SADIQ
STATE OF CALIFORNIA - DEPARTMENT OF TRANSPORTATION
Caltrans® DIVISION OF ENGINEERING

LAST REVISION DATE PLOTTED => 10-APR-2012
00-00-00 TIME PLOTTED => 10:24

Dist	COUNTY	ROUTE	POST MILES TOTAL PROJECT	SHEET No.	TOTAL SHEETS
03	ED	193	23.4	20	52

Normanye 3-26-12
REGISTERED ELECTRICAL ENGINEER

3-26-12
PLANS APPROVAL DATE

REGISTERED PROFESSIONAL ENGINEER
NORMAN YE
No. E 16913
Exp. 06-30-13
ELECT.
STATE OF CALIFORNIA

THE STATE OF CALIFORNIA OR ITS OFFICERS OR AGENTS SHALL NOT BE RESPONSIBLE FOR THE ACCURACY OR COMPLETENESS OF SCANNED COPIES OF THIS PLAN SHEET.

NOTE:

FOR ACCURATE RIGHT OF WAY ACCESS DATA.
CONTACT RIGHT OF WAY ENGINEERING AT THE DISTRIC OFFICE.

PROJECT NOTE: (SHEET E-1 AND E-2)

1 INSTALL TEMPORARY WOOD POLE.
EXACT LOCATION WILL BE DETERMINED
IN THE FIELD BY ENGINEER.

2 INSTALL 5 TURNS.

3. STRUCTURE PLANS
TEMPORARY WOOD POLE:
DEAD-END-POLE WITH ATTACHEMENTS
TANGENT POLE WITHOUT ATTACHEMENTS
TANGENT POLE WITH ATTACHEMENTS
CORNER POLE WITH UNBALANCED SPANS
DETAILS No.1 THROUGH No.5
AND
TEMPORARY SIGNAL SYSTEM:
WOOD POLE DETAILS: SES-1 AND SES-2

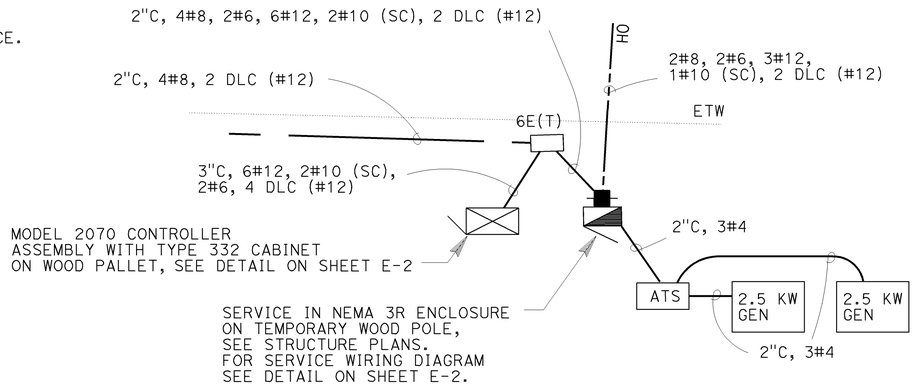

NOTE:
AUTOMATIC TRANSFER SWITCH IN LOCKABLE NEMA 3R CABINET.
CONTROL & SENSOR WIRING PROVIDED BY CONTRACTOR PER
MANUFACTURER SPECIFICATIONS.
ADD CONTROL WIRES WHERE REQUIRED.

GENERATOR AND AUTOMATIC TRANSFER SWITCH

NO SCALE

LEGEND

Y	TEMPORARY FLASHING BEACON (YELLOW)
GEN	GENERATOR
ATS	ATOMATIC TRANSFER SWITCH
SC	SIGNAL COMMON
gen	Exist GENERATOR
ats	Exist ATOMATIC TRANSFER SWITCH
sc	Exist SIGNAL COMMON
	Exist TEMPORARY FLASHING BEACON (YELLOW)

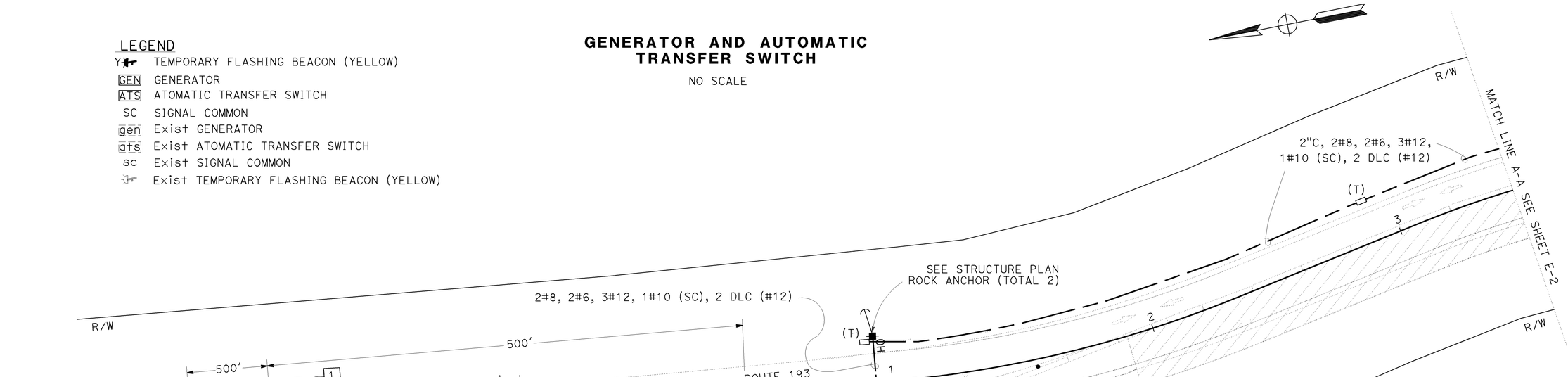

PHASE DIAGRAM	
Ø4	Ø2

TEMPORARY SIGNAL SYSTEM
(STAGE CONSTRUCTION 1)

SCALE: 1"= 20'

E-1

APPROVED FOR ELECTRICAL WORK ONLY

STATE OF CALIFORNIA - DEPARTMENT OF TRANSPORTATION
ELECTRICAL DESIGN
FUNCTIONAL SUPERVISOR: NELSON LEE
CALCULATED-DESIGNED BY: YOUNG TON
CHECKED BY: NORMAN YE
REVISED BY
DATE REVISED
LAST REVISION 02-06-12
DATE PLOTTED => 10-APR-2012
TIME PLOTTED => 10:24

BORDER LAST REVISED 7/2/2010
USERNAME => s134507
DGN FILE => 0300020566ua001.dgn
RELATIVE BORDER SCALE IS IN INCHES 0 1 2 3
UNIT 0403
PROJECT NUMBER & PHASE 03000205661

Dist	COUNTY	ROUTE	POST MILES TOTAL PROJECT	SHEET No.	TOTAL SHEETS
03	ED	193	23.4	21	52

Normanye 3-26-12
REGISTERED ELECTRICAL ENGINEER

3-26-12
PLANS APPROVAL DATE

REGISTERED PROFESSIONAL ENGINEER
NORMAN YE
No. E 16913
Exp. 06-30-13
ELECT.
STATE OF CALIFORNIA

THE STATE OF CALIFORNIA OR ITS OFFICERS OR AGENTS SHALL NOT BE RESPONSIBLE FOR THE ACCURACY OR COMPLETENESS OF SCANNED COPIES OF THIS PLAN SHEET.

NOTE:

FOR ACCURATE RIGHT OF WAY ACCESS DATA.
CONTACT RIGHT OF WAY ENGINEERING AT THE DISTRICT OFFICE.

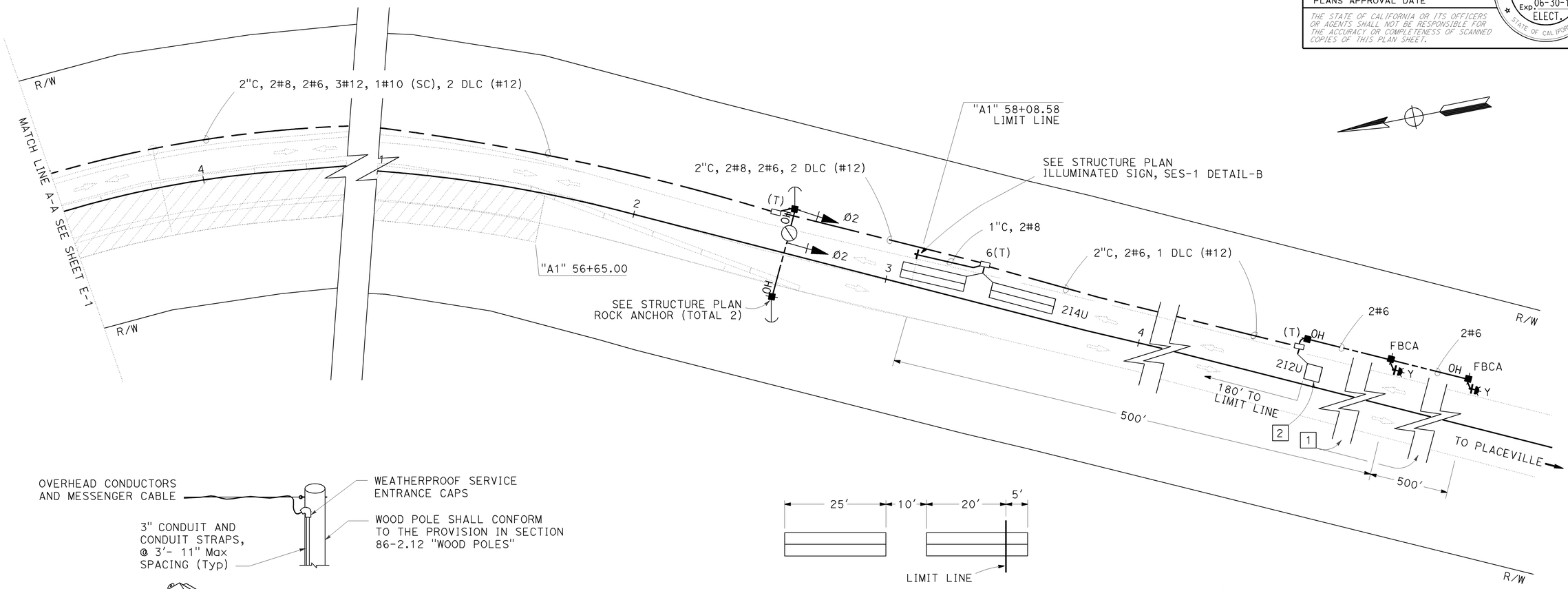

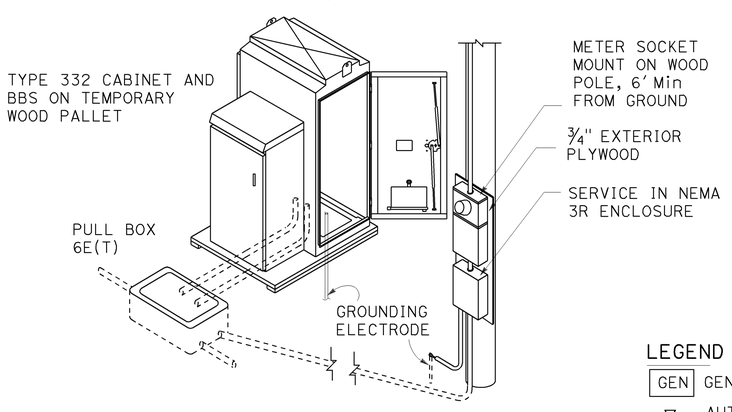

TEMPORARY TYPE 332 CABINET AND SERVICE

TYPICAL LOOP DETAIL

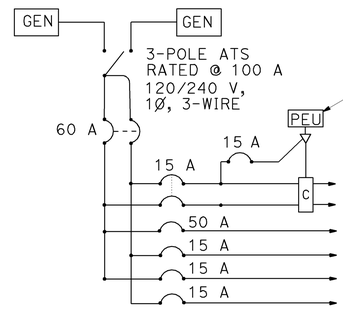

VOLT	NAMEPLATE DESCRIPTION
240	LIGHTING/ SIGN LIGHTING
120	SIGNAL
120	FLASHING BEACON NORTH
120	FLASHING BEACON SOUTH
120	SPARE

SERVICE WIRING DIAGRAM
SERVICE EQUIPMENT IN NEMA 3R ENCLOSURE

LEGEND
- GEN GENERATOR
- ▽ AUTO-TEST SWITCH
- C CONTACTOR

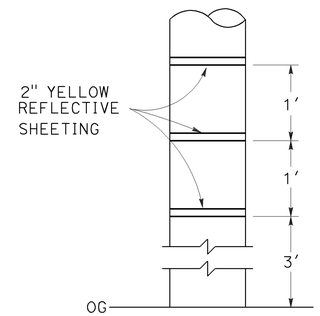

REFLECTIVE MARKING FOR WOOD POLE/POST

TEMPORARY SIGNAL SYSTEM
(STAGE CONSTRUCTION 1)

SCALE: 1"= 20'

E-2

APPROVED FOR ELECTRICAL WORK ONLY

STATE OF CALIFORNIA - DEPARTMENT OF TRANSPORTATION
Caltrans
ELECTRICAL DESIGN
FUNCTIONAL SUPERVISOR: NELSON LEE
CALCULATED-DESIGNED BY: YOUNG TON
CHECKED BY: NORMAN YE
REVISED BY | DATE REVISED

LAST REVISION | DATE PLOTTED => 10-APR-2012
02-06-12 | TIME PLOTTED => 10:24

BORDER LAST REVISED 7/2/2010 | USERNAME => s134507 | DGN FILE => 0300020566ua002.dgn | RELATIVE BORDER SCALE IS IN INCHES 0 1 2 3 | UNIT 0403 | PROJECT NUMBER & PHASE 03000205661

Dist	COUNTY	ROUTE	POST MILES TOTAL PROJECT	SHEET No.	TOTAL SHEETS
03	ED	193	23.4	22	52

Normanye 3-26-12
REGISTERED ELECTRICAL ENGINEER

3-26-12
PLANS APPROVAL DATE

REGISTERED PROFESSIONAL ENGINEER
NORMAN YE
No. E 16913
Exp. 06-30-13
ELECT.
STATE OF CALIFORNIA

THE STATE OF CALIFORNIA OR ITS OFFICERS OR AGENTS SHALL NOT BE RESPONSIBLE FOR THE ACCURACY OR COMPLETENESS OF SCANNED COPIES OF THIS PLAN SHEET.

NOTE:

FOR ACCURATE RIGHT OF WAY ACCESS DATA.
CONTACT RIGHT OF WAY ENGINEERING AT THE DISTRIC OFFICE.

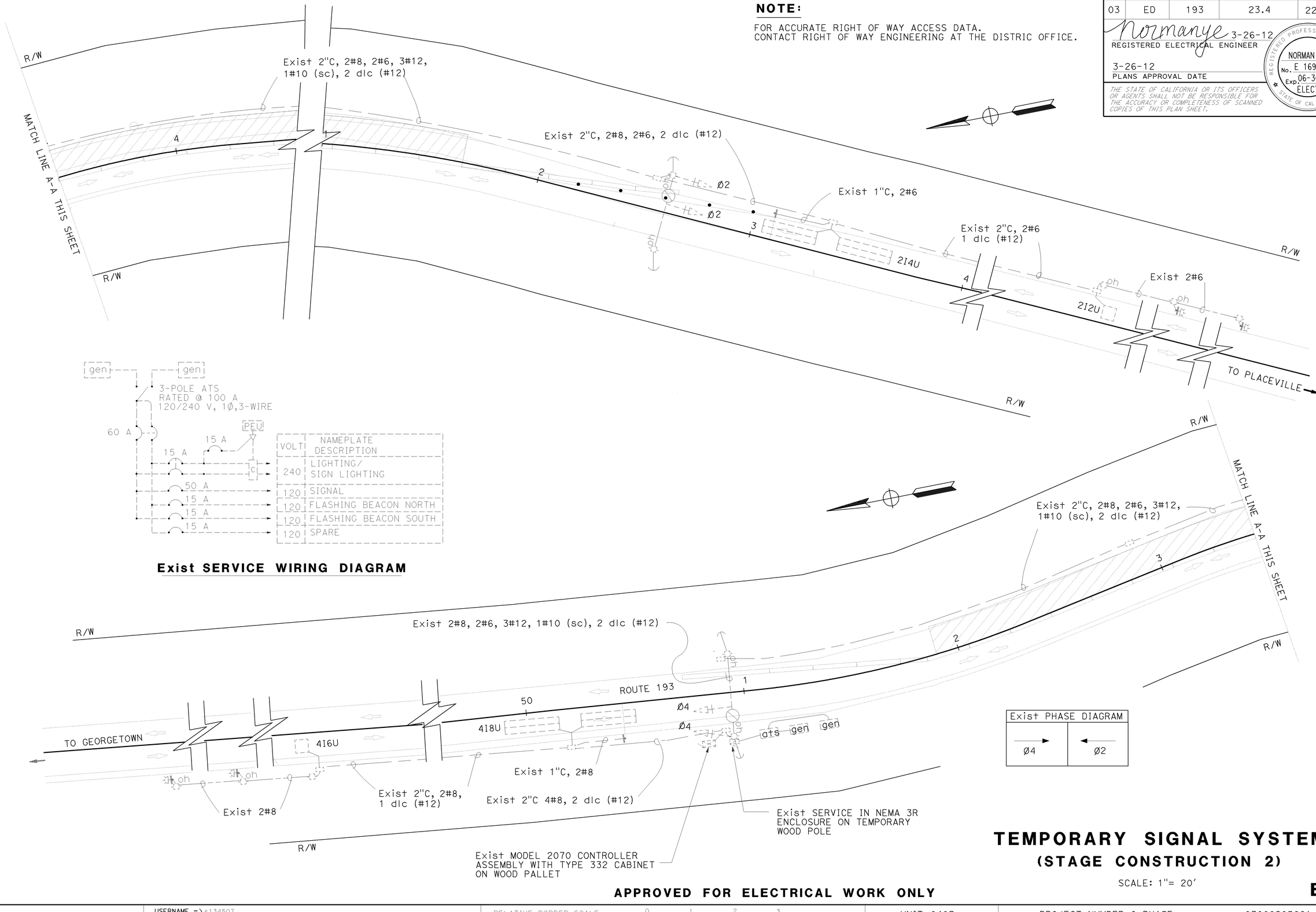

Exist SERVICE WIRING DIAGRAM

APPROVED FOR ELECTRICAL WORK ONLY

TEMPORARY SIGNAL SYSTEM
(STAGE CONSTRUCTION 2)

SCALE: 1"= 20'

E-3

CALCULATED-DESIGNED BY	YOUNG TON
CHECKED BY	NORMAN YE
FUNCTIONAL SUPERVISOR	NELSON LEE

STATE OF CALIFORNIA - DEPARTMENT OF TRANSPORTATION
ELECTRICAL DESIGN

REVISED BY	DATE REVISED

LAST REVISION
DATE PLOTTED => 10-APR-2012
TIME PLOTTED => 0124
01-23-12

BORDER LAST REVISED 7/2/2010

USERNAME => s134507
DGN FILE => 0300020566ua003.dgn

RELATIVE BORDER SCALE IS IN INCHES 0 1 2 3

UNIT 0403

PROJECT NUMBER & PHASE 03000205661

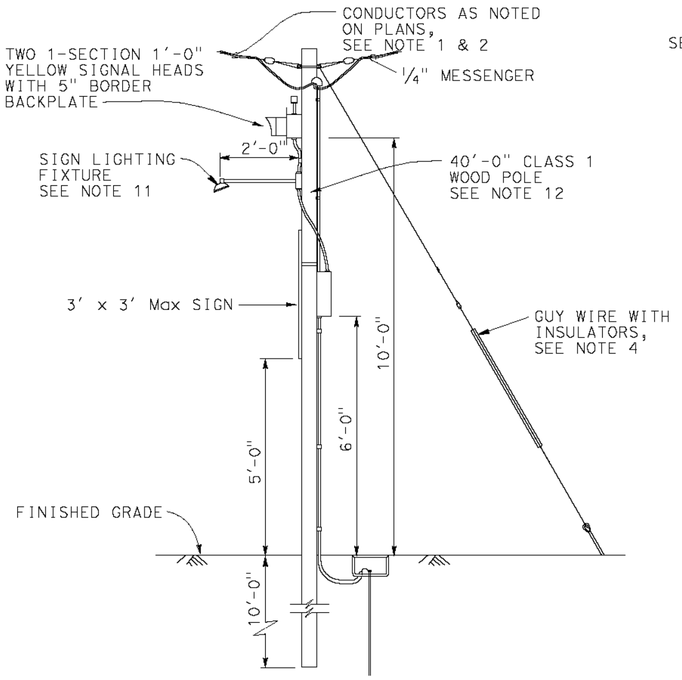

WOOD POLE SUPPORT FOR FLASHING BEACON

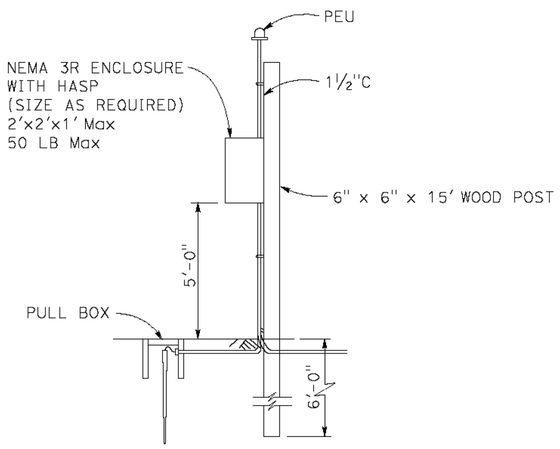

TEMPORARY WOOD POST DETAIL

NOTE:
THE CONTRACTOR SHALL VERIFY ALL CONTROLLING FIELD DIMENSIONS BEFORE ORDERING OR FABRICATING ANY MATERIAL.

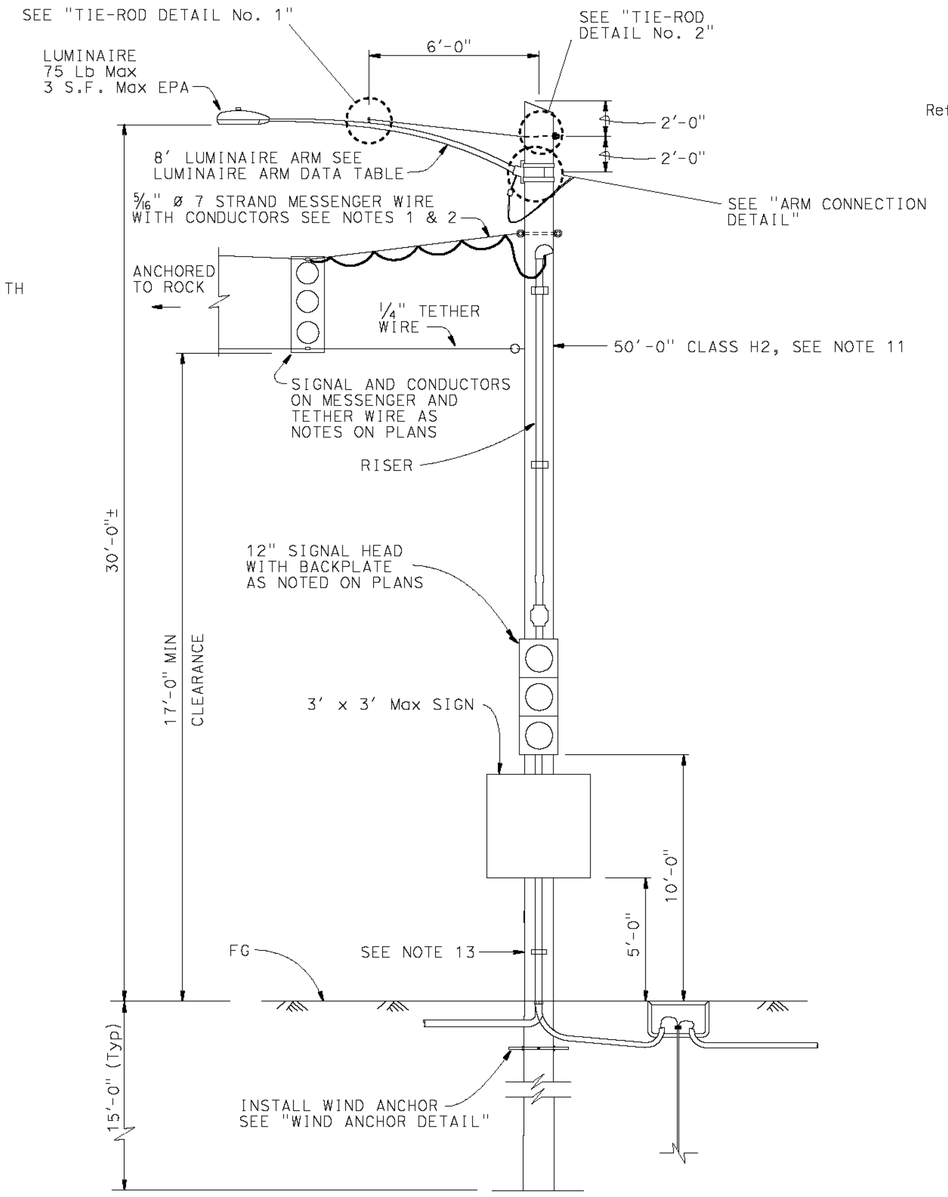

TYPICAL WOOD POLE SUPPORT

SEE NOTE 11

NO SCALE

LUMINAIRE ARM DATA			
Projected Length	N Rise	Min OD At Pole	Thickness
8'-0"	2'-6"	3 1/2"	0.1196"

Refer to ES-6D for Luminaire arm details

GENERAL NOTES:

Design: AASHTO Standard Specifications for Structural Supports for Highway Signs, Luminaires and Traffic Signals dated 2001.

LOADING

Wind Loadings: 85 MPH, Ice Load 3.0 psf

UNIT STRESSES

Timber Poles: Fb = 1850 Tapered treated round pole
Fv = 110 psi ASTM D2899 Standard
E = 1500 x 10^3 psi

TREATMENT

To conform with Section 86 Standard Specifications

SPECIFICATIONS

Caltrans Standard Specifications 2006
ANSI Wood Poles
Utility Grade Wires

NOTES:

1. All overhead cables shall be slack spanned with 17'-0" minimum overhead clearance.
2. Conductors shall be suspended from span-wire as follows:
   A) Main run span-wire with 5% + 0.5% sag and Tether wire with 3% + 0.5% sag where required. No spare conductors allowed except as noted.
3. Overhead line construction not specifically covered here shall conform with the provisions of General Order No. 95 of Public Utilities Commission.
4. Wood poles shall be stabilized using guy wires, breast blocks or rakes at each dead end, corner, drop or line deviation more than 15° from straight line. The direction of the guy shall counteract the resultant of unbalanced force applied to pole. Where space or conflict prevent guy installation, a diagonal brace shall be used. The brace shall be wood and shall be connected to the pole by means to satisfy structural and electrical requirements. The direction of the brace shall counteract the resultant of unbalanced horizontal force of 2000 pounds (Min).
5. Guy wire shall be attached to pole as nearly as practical to the center of conductors load, or 3'-0" Max otherwise, See Note 4.
6. All attachments shall be mounted with stainless steel straps or other manufacturers methods without drilling holes in pole, except as shown. Drilling through pole will require the Engineer's approval.
7. Foundation design is based on AASHTO 2001 article 13.6 Broms' approximate procedure assuming a cohesionless material. The angle of Internal friction used is 30° and unit weight of soil used is 120 lb/ft^3. For rock bolt anchoring minimum compressive strength of the rock C = 2500 psi, RQD = 40 and safety factor SF = 2. The Contractor to verify actual soil condition.
8. The Contractor to verify steep slope for adequate embedment.
9. See Sheets SES-2, SES-3 and SES-4 for details.
10. For details not shown, see "2006 STANDARD PLANS".
11. Max span 45' for messenger and tether wire.
12. Max Span 170' for messenger carrying 2 #8, total 2 conductors only.
13. All temporary poles support OH Conductors. Attach combination of attachments as specified at locations where indicated on Electrical Sheets.
14. All temporary wood poles shall be protected from traffic by means according to California Department of Transportation Highway Manual as required. See "Roadway Plans".

DIST	COUNTY	ROUTE	POST MILES TOTAL PROJECT	SHEET No	TOTAL SHEETS
03	ED	193	23.4	23	52

REGISTERED CIVIL ENGINEER — DATE 3/28/12

REGISTERED PROFESSIONAL ENGINEER — TAMARA S. MARCHENKO — No. C76837 — Exp. 12/31/12 — CIVIL — STATE OF CALIFORNIA

3-26-12
PLANS APPROVAL DATE

The State of California or its officers or agents shall not be responsible for the accuracy or completeness of electronic copies of this plan sheet.

To get to the Caltrans web site, go to: http://www.dot.ca.gov

BRANCH CHIEF JAMES SAGAR

	BY	CHECKED
DESIGN	T MARCHENKO	V LOPEZ
DETAILS	H NGUYEN	V LOPEZ / L WARREN
QUANTITIES	BY	CHECKED

STATE OF CALIFORNIA
DEPARTMENT OF TRANSPORTATION

DIVISION OF ENGINEERING SERVICES
DESIGN AND TECHNICAL SERVICES
SPECIAL DESIGNS BRANCH B

BRIDGE NO. N/A
POST MILE 23.4

TEMPORARY SIGNAL SYSTEM
TEMPORARY WOOD POLE

SES-1

(ENGLISH) SPECIAL DESIGNS BRANCH BORDER SHEET (REV. 7-1-09)

ORIGINAL SCALE IN INCHES FOR REDUCED PLANS 0 1 2 3

UNIT: 3619
PROJECT NUMBER & PHASE: 0300020566
CONTRACT NO.: 03-1F6001

DISREGARD PRINTS BEARING EARLIER REVISION DATES →

REVISION DATES				SHEET	OF
10-17-11				1	4

FILE => spec_des_br_prj/2011sd/03-1f6001_ses1.dgn

USERNAME => s128478 DATE PLOTTED => 28-MAR-2012 TIME PLOTTED => 09:03

DIST	COUNTY	ROUTE	POST MILES TOTAL PROJECT	SHEET No	TOTAL SHEETS
03	ED	193	23.4	24	52

REGISTERED CIVIL ENGINEER — DATE 3/28/12

PLANS APPROVAL DATE 3-26-12

REGISTERED PROFESSIONAL ENGINEER — TAMARA S. MARCHENKO — No. C76837 — Exp. 12/31/12 — CIVIL — STATE OF CALIFORNIA

The State of California or its officers or agents shall not be responsible for the accuracy or completeness of electronic copies of this plan sheet.

To get to the Caltrans web site, go to: http://www.dot.ca.gov

NOTES:

1. All hardware and steel shall be galvanized after fabrication.
2. Arm Base connection details shall be in compliance with Standard Plans Detail Sheet ES-6D with noted modifications.
3. 2000 lb Min capacity strap system shall be used for top and bottom of plate.
4. The Contractor to verify pole dimensions at Tie-Rod attachment height. Fabricate 8" flat bar with "L" Dimension to maintain an open gap between encasement in finished installation.

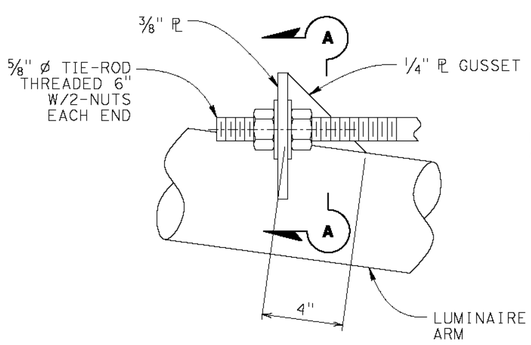

ELEVATION

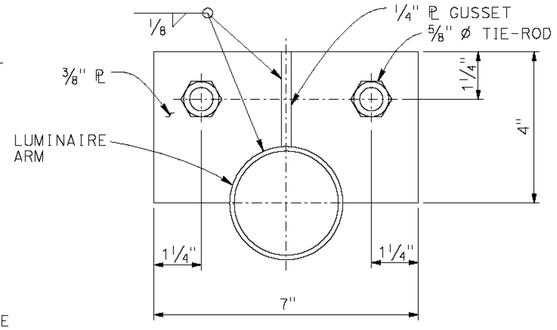

SECTION A-A

TIE-ROD DETAIL No. 1

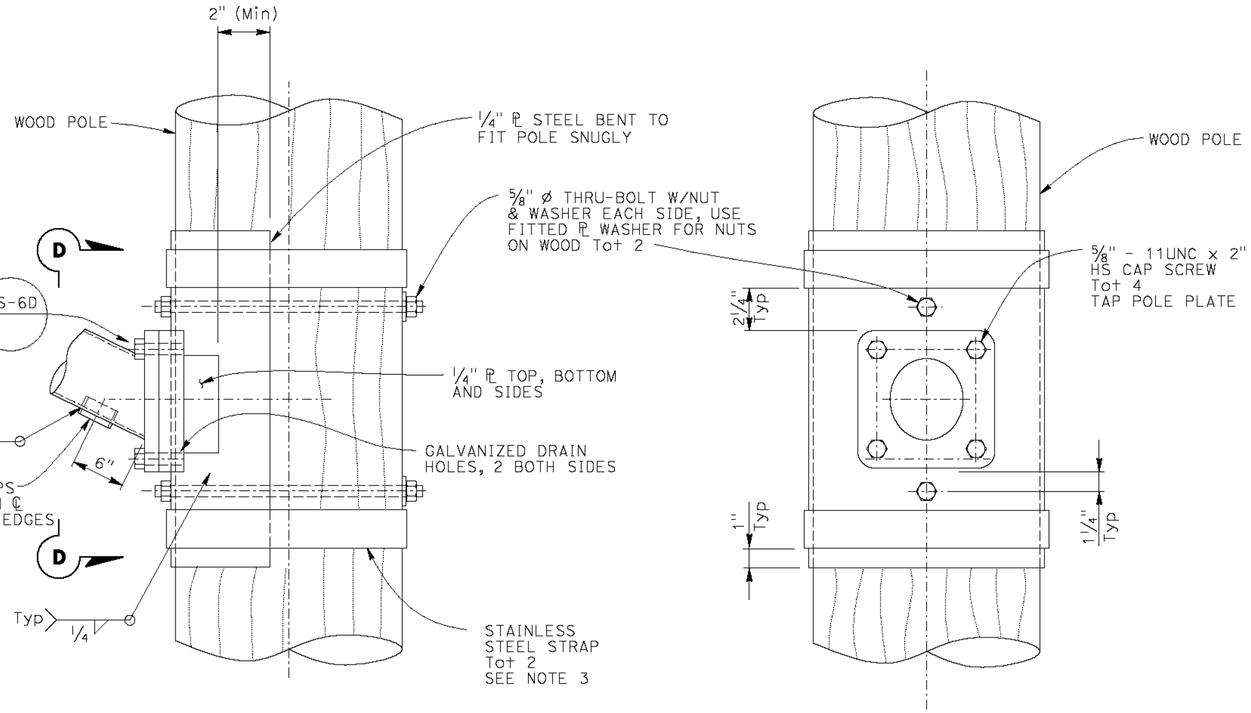

ELEVATION **VIEW D-D**

NOTE:
THE CONTRACTOR SHALL VERIFY ALL CONTROLLING FIELD DIMENSIONS BEFORE ORDERING OR FABRICATING ANY MATERIAL.

ARM CONNECTION DETAILS

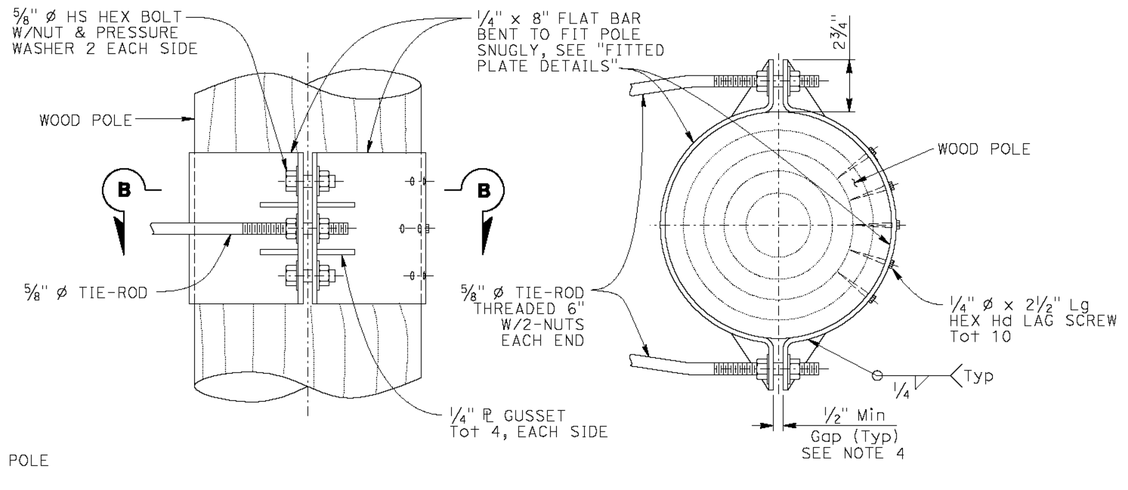

ELEVATION **SECTION B-B**

TIE-ROD DETAIL No. 2

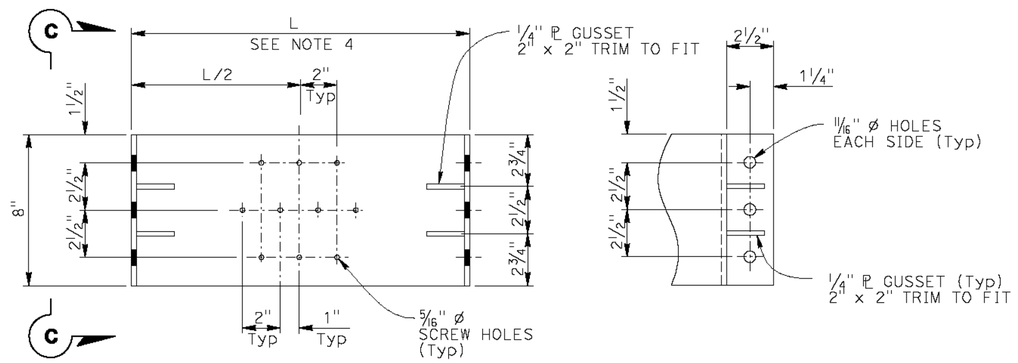

ELEVATION **VIEW C-C**

FITTED PLATE DETAILS

Note: 2 Required (1 w/screw holes, 1 without)

NO SCALE

BRANCH CHIEF JAMES SAGAR	DESIGN	BY T MARCHENKO	CHECKED V LOPEZ	STATE OF CALIFORNIA DEPARTMENT OF TRANSPORTATION	DIVISION OF ENGINEERING SERVICES DESIGN AND TECHNICAL SERVICES SPECIAL DESIGNS BRANCH B	BRIDGE NO. N/A POST MILE 23.4	TEMPORARY SIGNAL SYSTEM WOOD POLE MOUNTING DETAILS	SES-2
	DETAILS	BY H NGUYEN	CHECKED V LOPEZ					
	QUANTITIES	BY	CHECKED					

(ENGLISH) SPECIAL DESIGNS BRANCH BORDER SHEET (REV. 7-1-09)

ORIGINAL SCALE IN INCHES FOR REDUCED PLANS 0 1 2 3

UNIT: 3619 PROJECT NUMBER & PHASE: 0300020566 CONTRACT NO.: 03-1F6001

DISREGARD PRINTS BEARING EARLIER REVISION DATES → REVISION DATES 10-17-11

SHEET 2 OF 4

FILE => spec_des_br_prj/2011sd/03-1f6001_ses2.dgn

USERNAME => s128478 DATE PLOTTED => 28-MAR-2012 TIME PLOTTED => 09:03

DIST	COUNTY	ROUTE	POST MILES TOTAL PROJECT	SHEET No	TOTAL SHEETS
03	ED	193	23.4	25	52

REGISTERED CIVIL ENGINEER — 3/28/12 DATE

TAMARA S. MARCHENKO — REGISTERED PROFESSIONAL ENGINEER — No. C76837 — Exp. 12/31/12 — CIVIL — STATE OF CALIFORNIA

3-26-12
PLANS APPROVAL DATE

The State of California or its officers or agents shall not be responsible for the accuracy or completeness of electronic copies of this plan sheet.

To get to the Caltrans web site, go to: http://www.dot.ca.gov

COMPARTMENT PLATE (MOD)

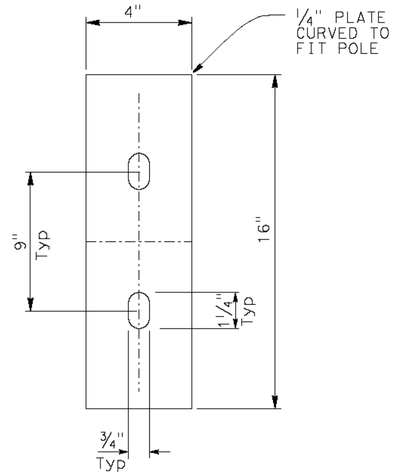

BACK PLATE

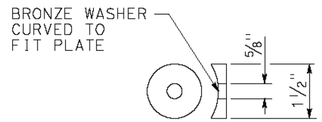

DETAIL "C"

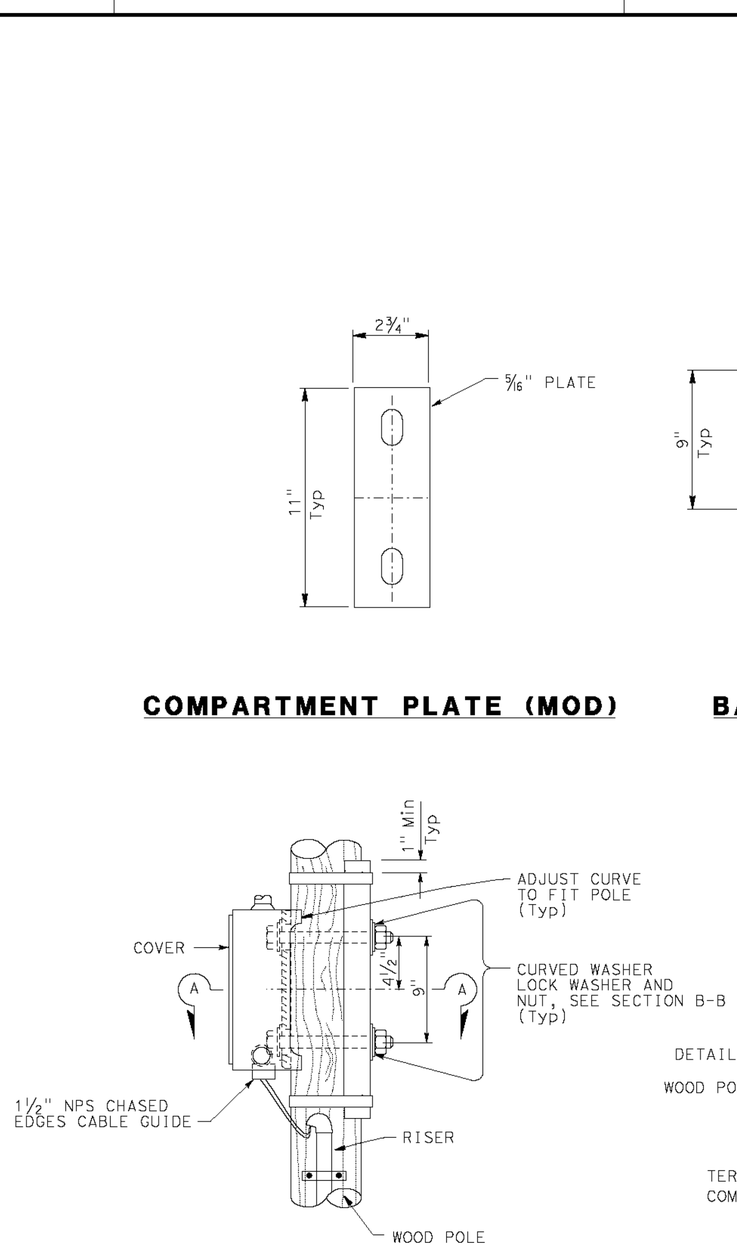

SIDE MOUNTING
TERMINAL COMPARTMENT

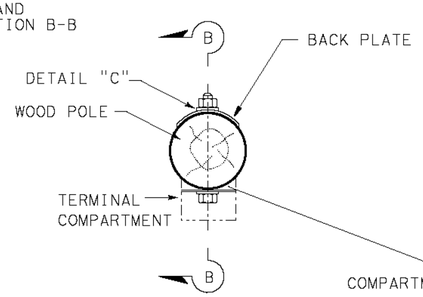

SECTION A-A

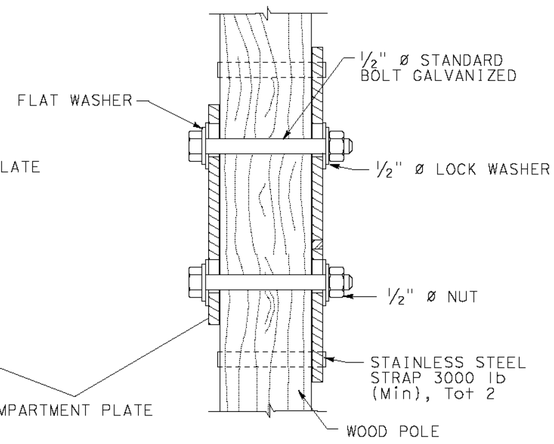

SECTION B-B

NOTE:
THE CONTRACTOR SHALL VERIFY ALL CONTROLLING FIELD DIMENSIONS BEFORE ORDERING OR FABRICATING ANY MATERIAL.

SIGNAL HEAD MOUNTING

For Details Not Shown See RSP-ES-4D Sheet

NO SCALE

BRANCH CHIEF JAMES SAGAR

	BY	CHECKED
DESIGN	T MARCHENKO	V LOPEZ
DETAILS	HUNG NGUYEN	V LOPEZ
QUANTITIES	BY	CHECKED

STATE OF CALIFORNIA
DEPARTMENT OF TRANSPORTATION

DIVISION OF ENGINEERING SERVICES
DESIGN AND TECHNICAL SERVICES
SPECIAL DESIGNS BRANCH **B**

BRIDGE NO. N/A
POST MILE 23.4

TEMPORARY SIGNAL SYSTEM
WOOD POLE DETAILS

SES-3

(ENGLISH) SPECIAL DESIGNS BRANCH BORDER SHEET (REV. 7-1-09)

ORIGINAL SCALE IN INCHES FOR REDUCED PLANS 0 1 2 3

UNIT: 3619
PROJECT NUMBER & PHASE: 0300020566 CONTRACT NO.: 03-1F6001

DISREGARD PRINTS BEARING EARLIER REVISION DATES →

REVISION DATES: 10-17-11

SHEET 3 OF 4

FILE => spec_des_br_prj/2011sd/04-4a07u1/03-1f6001_ses3.dgn

USERNAME => s128478 DATE PLOTTED => 28-MAR-2012 TIME PLOTTED => 09:03

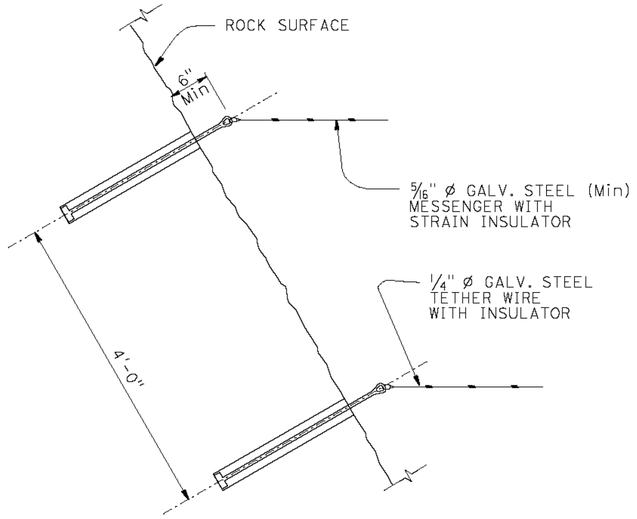

ROCK BOLTS

See detail below

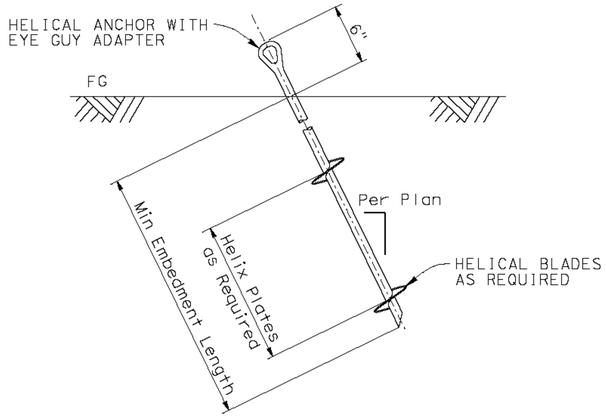

ALTERNATIVE GUY WIRE INSTALLATION DETAIL

(See Helical Anchor Specifications Table)

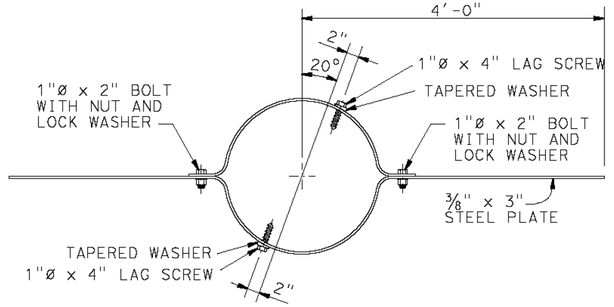

WIND ANCHOR

To be installed perpendicular to luminaire arms and 2'-0" Min below grade

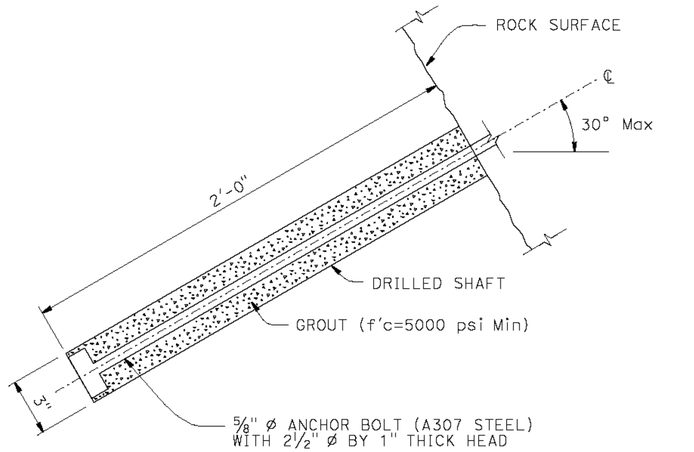

MINIMUM DISTANCE FROM ANY ROCK EDGE SHALL BE 24"

ROCK BOLT DETAIL

NOTE:
THE CONTRACTOR SHALL VERIFY ALL CONTROLLING FIELD DIMENSIONS BEFORE ORDERING OR FABRICATING ANY MATERIAL.

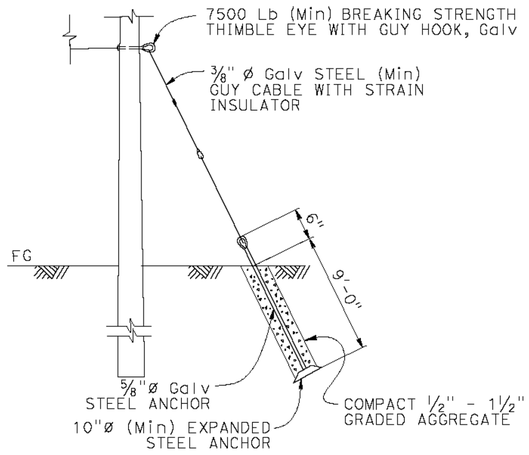

GUY WIRE INSTALLATION DETAIL

NO SCALE

HELICAL ANCHOR SPECIFICATIONS

Anchor Location	Type	Helix Plate Diameter*	Allowable Min Tension Cap., "Q_a"	Embedment Length (Min)	Installation Torque (Min)**, "T"
Detail	Tension	10"	3000 lb	9'-0"	900 Ft-lb

SPECIFICATION NOTES:

1 During installation the torque will be continuosly monitored and recorded. If a drop in torque is recorded, the anchor must then continue to be inserted past the soft soil layer until Minimum Installation Torque is achieved.

2 Anchors and Hardware to be installed per the manufacturers specifications.

* Number of helical plates is not specified; Contractors choice.

** Adjust accordingly if required, See Note 3.

NOTES:

1. The Contractor to verify soil condition, slope, and adjust anchoring to satisfy basic design requirements per Note 7 on SES-1 sheet.

2. Use of alternative Guy Wire Installation Detail requires that the soil bearing capacity be verified by the Contractor.

3. The Contractor shall determine the most appropriate value for K_t based on soil conditions and shall adjust the Min Installation Torque based on the revised K_t. A K_t value of 10 was assumed for the Min Installation Torque shown in the table.

   The Helical Installation torque Formula is $Q_u = K_t * T$ where,

   $Q_u = Q_a * FS$ = Ultimate Helical Anchor Capacity (lb)
   FS = Factor of Safety = 3.0
   Q_a = Allowable Helical Anchor Capacity (lb)
   K_t = Empirical Torque Factor (ft^{-1})
   T = Min Installation Torque (ft-lb)

4. Requests made by Helical Anchor Installation Contractor to reduce the minimum embedment length and/or Helix ℄ diameter require the Engineer's approval.

5. The Contractor shall locate and mark all of the substructures and utilities. Installation of anchors underneath utilities or subsurface structures is prohibited. Horizontal clearances of anchors shall be determined by the Inspector during construction.

DIST	COUNTY	ROUTE	POST MILES TOTAL PROJECT	SHEET No	TOTAL SHEETS
03	ED	193	23.4	26	52

3/28/12
REGISTERED CIVIL ENGINEER DATE

REGISTERED PROFESSIONAL ENGINEER TAMARA S. MARCHENKO No. C76837 Exp.12/31/12 CIVIL STATE OF CALIFORNIA

3-26-12
PLANS APPROVAL DATE

The State of California or its officers or agents shall not be responsible for the accuracy or completeness of electronic copies of this plan sheet.

To get to the Caltrans web site, go to: http://www.dot.ca.gov

BRANCH CHIEF	JAMES SAGAR		
DESIGN	BY T MARCHENKO	CHECKED V LOPEZ / L WARREN	
DETAILS	BY H NGUYEN	CHECKED B NAGID	
QUANTITIES	BY	CHECKED	

STATE OF CALIFORNIA
DEPARTMENT OF TRANSPORTATION

DIVISION OF ENGINEERING SERVICES
DESIGN AND TECHNICAL SERVICES
SPECIAL DESIGNS BRANCH B

BRIDGE NO. N/A
POST MILE 23.4

TEMPORARY SIGNAL SYSTEM
WOOD POLE DETAILS

SES-4

(ENGLISH) SPECIAL DESIGNS BRANCH BORDER SHEET (REV. 7-1-09)

ORIGINAL SCALE IN INCHES FOR REDUCED PLANS 0 1 2 3

UNIT: 3619
PROJECT NUMBER & PHASE: 0300020566 CONTRACT NO.: 03-1F6001

DISREGARD PRINTS BEARING EARLIER REVISION DATES →

REVISION DATES: 10-17-11

SHEET 4 OF 4

FILE => spec_des_br_prj/2011sd/07-260701/03-1f6001_ses4.dgn

USERNAME => s128478 DATE PLOTTED => 28-MAR-2012 TIME PLOTTED => 09:04

Dist	COUNTY	ROUTE	POST MILES TOTAL PROJECT	SHEET No.	TOTAL SHEETS
03	ED	193	23.4	27	52

Randell D. Hiatt
REGISTERED CIVIL ENGINEER

May 20, 2011
PLANS APPROVAL DATE

REGISTERED PROFESSIONAL ENGINEER — Randell D. Hiatt — No. C50200 — Exp. 6-30-11 — CIVIL — STATE OF CALIFORNIA

The State of California or its officers or agents shall not be responsible for the accuracy or completeness of electronic copies of this plan sheet.

To accompany plans dated 3-26-12

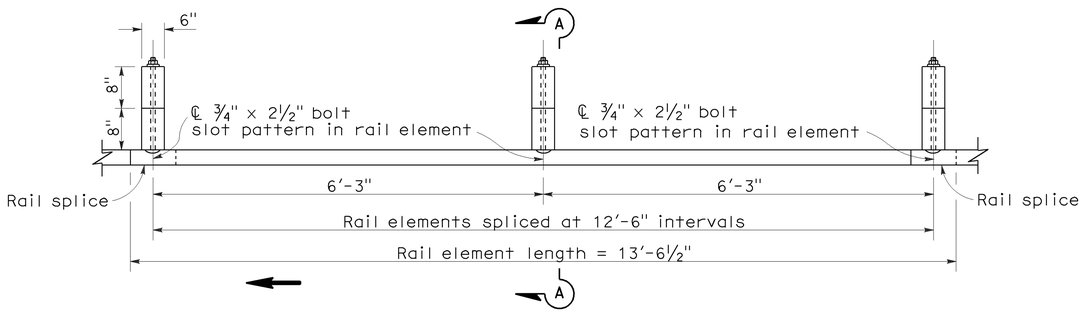

PLAN

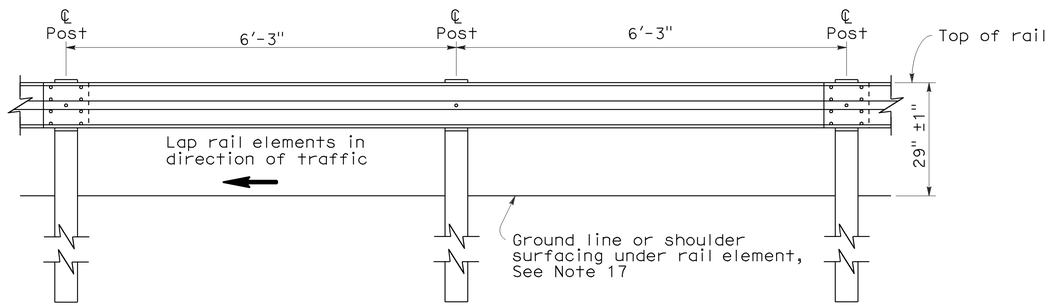

ELEVATION

METAL BEAM GUARD RAILING WITH WOOD POST AND BLOCKS

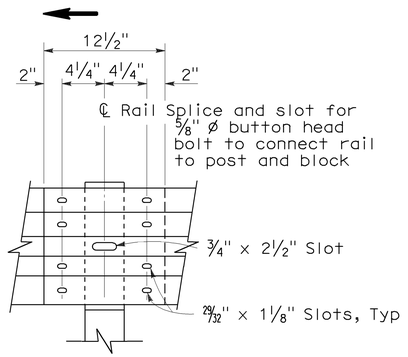

ELEVATION

RAIL ELEMENT SPLICE DETAIL

a) Connect the over lapped end of the rail elements with ⅝" ø x 1⅜" button head oval shoulder splice bolts inserted into the 29/32" x 1⅛" slots and bolted together with ⅝" ø recessed hex nuts. Recess of hex nut points toward rail element. A total of 8 bolts and nuts are to be used at each rail splice connection.

b) The ends of the rail elements are to be overlapped in the direction of traffic (see details).

c) Where end cap is to be attached to the end of a rail element, a total of 4 of the above described splice bolts and nuts are to be used.

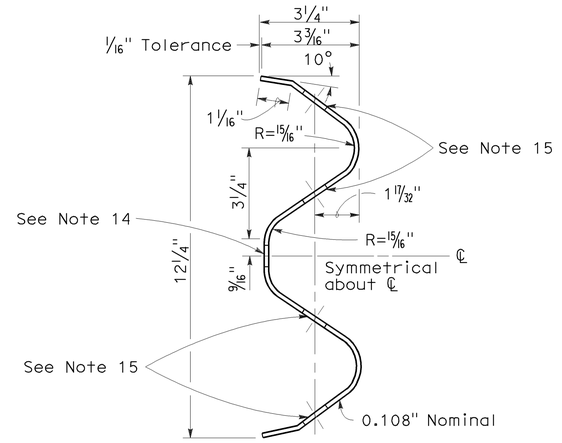

SECTION THRU RAIL ELEMENT

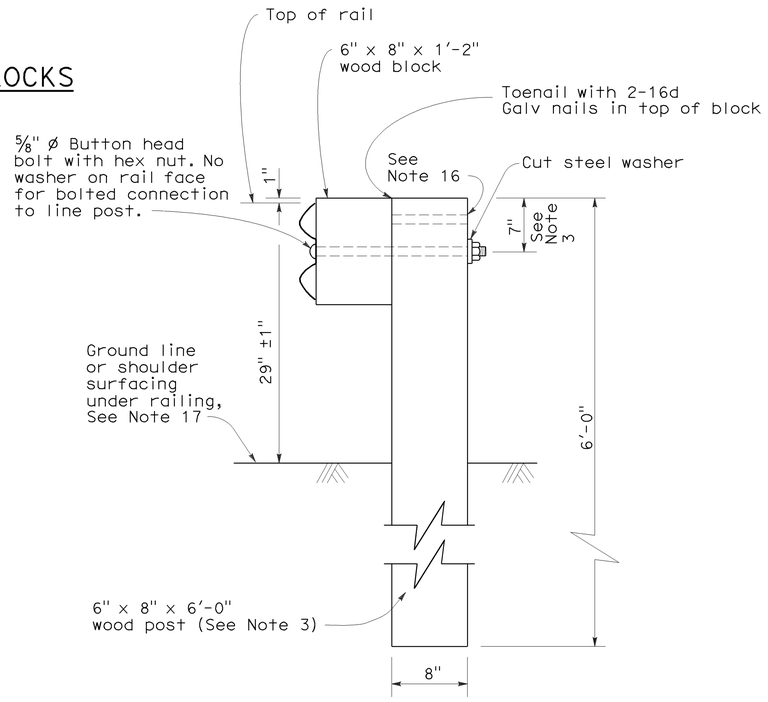

SECTION A-A

TYPICAL WOOD LINE POST INSTALLATION

See Note 4

NOTES:

1. For details of steel post installations, see Standard Plan A77A2.
2. For details of standard hardware used to construct guard railing, see Standard Plan A77B1.
3. For details of wood posts and wood blocks used to construct guard railing, see Standard Plan A77C1.
4. For additional installation details, see Standard Plan A77C3.
5. Guard railing post spacing to be 6'-3" center to center, except as otherwise noted.
6. For guard railing typical layouts, see the A77E, A77F and A77G Series of Standard Plans.
7. For terminal system end treatment details, see the A77L Series of Standard Plans. To connect railing to terminal system end treatment, transition the top of railing height at a ratio of 120:1 to terminal system end treatment height plus one 12'-6" standard railing section at the transitioned height for a horizontal connection to the end treatment.
8. For guard railing end anchor details, see Standard Plans A77H1 and A77I2.
9. For details of guard railing transition to bridge railing, see Standard Plan A77J4.
10. For additional details of guard railing connection to bridge railings, see Standard Plans A77J1, A77J2 and A77K1.
11. For guard railing connection details to abutments and walls, see Standard Plan A77J3.
12. Direction of adjacent traffic indicated by →.
13. For typical guard railing delineation and dike positioning details, see Standard Plan A77C4.
14. Slotted hole for bolted connection of rail element to block and post. See "Section Thru Rail Element".
15. Slotted holes for splice bolts to overlap ends of rail element. See "Section Thru Rail Element".
16. Additional hole in uppermost portion of line post is for potential future adjustments of railing height. See Standard Plan A77C1.
17. Install posts in soil.

STATE OF CALIFORNIA
DEPARTMENT OF TRANSPORTATION

METAL BEAM GUARD RAILING STANDARD RAILING SECTION (WOOD POST WITH WOOD BLOCK)

NO SCALE

RSP A77A1 DATED MAY 20, 2011 SUPERSEDES STANDARD PLAN A77A1 DATED MAY 1, 2006 - PAGE 41 OF THE STANDARD PLANS BOOK DATED MAY 2006.

REVISED STANDARD PLAN RSP A77A1

2006 REVISED STANDARD PLAN RSP A77A1

3-10-11

Dist	COUNTY	ROUTE	POST MILES TOTAL PROJECT	SHEET No.	TOTAL SHEETS
03	ED	193	23.4	28	52

To accompany plans dated 3-26-12

Randell D. Hiatt
REGISTERED CIVIL ENGINEER

May 20, 2011
PLANS APPROVAL DATE

REGISTERED PROFESSIONAL ENGINEER — Randell D. Hiatt — No. C50200 — Exp. 6-30-11 — CIVIL — STATE OF CALIFORNIA

The State of California or its officers or agents shall not be responsible for the accuracy or completeness of electronic copies of this plan sheet.

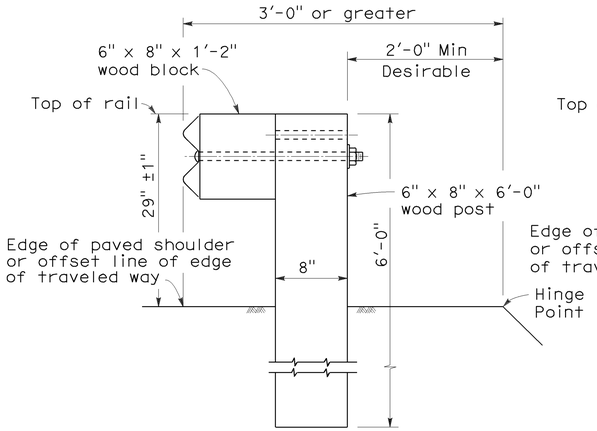

DETAIL A

TYPICAL ROADWAY INSTALLATION

See Note 1

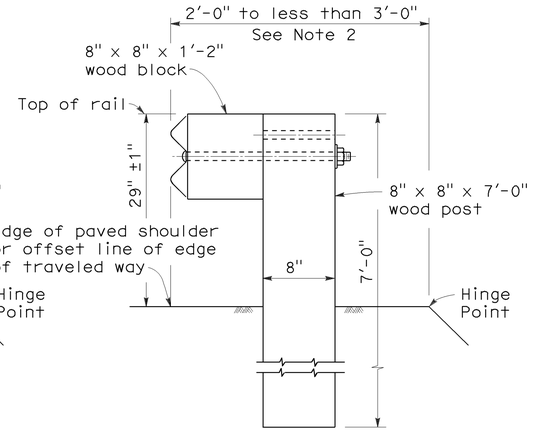

DETAIL B

NARROW ROADWAY INSTALLATION

See Note 1

POST EMBEDMENT

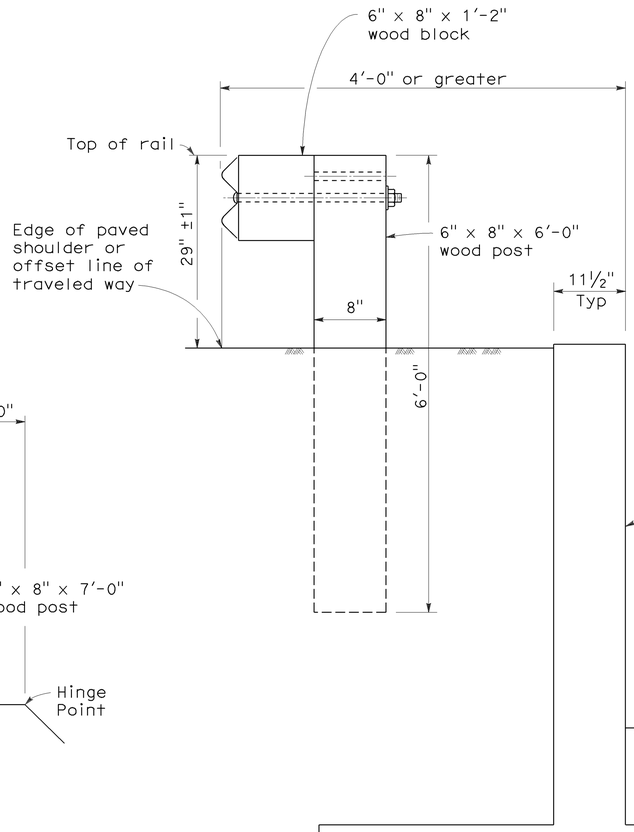

DETAIL C

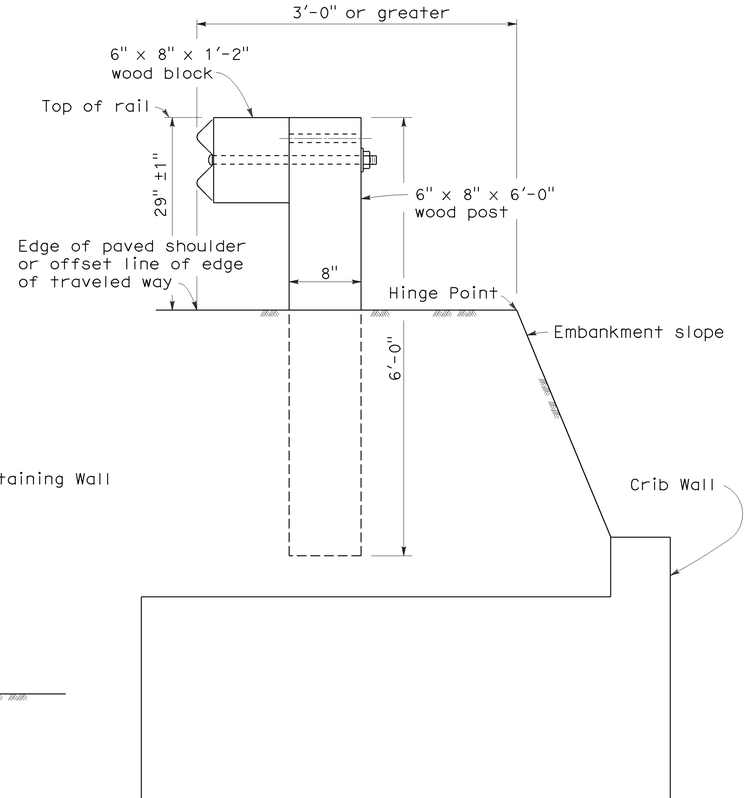

DETAIL D

INSTALLATION AT EARTH RETAINING WALLS

NOTES:

1. These installation details also applicable to steel line post installations. For Detail A, C, and D, where steel line post installations are constructed, W6 x 9 steel post, 6'-0" in length, with 6" x 8" x 1'-2" notched wood blocks or notched recycled plastic blocks are to be used in place of the size of wood post and wood block shown. For Detail B, where steel line post installations are constructed, W6 x 9 steel post, 7'-0" in length, with 6" x 8" x 1'-2" notched wood blocks or notched recycled plastic blocks are to be used in place of the size of wood post and wood block shown. For additional installation details, see Standard Plans A77A1 and A77A2.
2. Where the distance between the face of the rail and the hinge point is less than 2'-0", see the Project Plans for special details.
3. For dike positioning with guard railing installations, see Standard Plan A77C4.

STATE OF CALIFORNIA
DEPARTMENT OF TRANSPORTATION

METAL BEAM GUARD RAILING TYPICAL LINE POST EMBEDMENT AND HINGE POINT OFFSET DETAILS

NO SCALE

RSP A77C3 DATED MAY 20, 2011 SUPERSEDES STANDARD PLAN A77C3
DATED MAY 1, 2006 - PAGE 46 OF THE STANDARD PLANS BOOK DATED MAY 2006.

REVISED STANDARD PLAN RSP A77C3

2006 REVISED STANDARD PLAN RSP A77C3

3-10-11

Dist	COUNTY	ROUTE	POST MILES TOTAL PROJECT	SHEET No.	TOTAL SHEETS
03	ED	193	23.4	29	52

Randell D. Hiatt
REGISTERED CIVIL ENGINEER

May 20, 2011
PLANS APPROVAL DATE

REGISTERED PROFESSIONAL ENGINEER
Randell D. Hiatt
No. C50200
Exp. 6-30-11
CIVIL
STATE OF CALIFORNIA

The State of California or its officers or agents shall not be responsible for the accuracy or completeness of electronic copies of this plan sheet.

To accompany plans dated 3-26-12

NOTES:

1. When necessary to place dike in front of face of guard railing, only Type C dike may be used. For dike details, see Standard Plan A87B.
2. For standard railing post embedment, see Standard Plans A77C3.
3. Guard railing delineation to be used where shown on the Project Plans.
4. When dike or curb is placed under guard railing, the maximum height of the dike or curb shall be 4". Mountable dike should not be used. For dike and curb details, see Standard Plans A87A and A87B.
5. For details of typical distance between the face of rail and hinge point, see Standard Plan A77C3.
6. For steel line posts, use ¼ - 20 self-tapping screws in 0.22" diameter holes or ¼" bolts in 9/32" diameter holes.

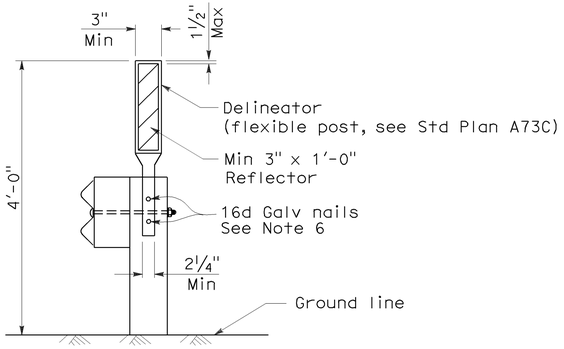

GUARD RAILING DELINEATION
See Note 3

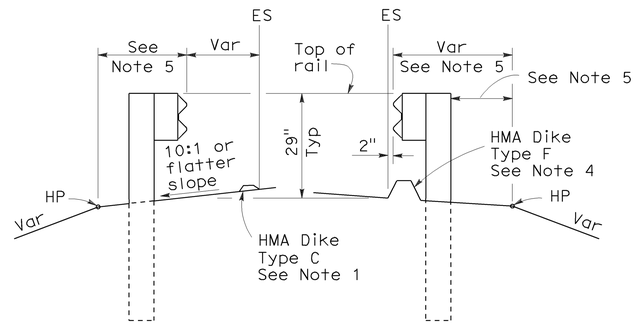

DIKE POSITIONING
See Note 1

STATE OF CALIFORNIA
DEPARTMENT OF TRANSPORTATION

METAL BEAM GUARD RAILING TYPICAL RAILING DELINEATION AND DIKE POSITIONING DETAILS

NO SCALE

RSP A77C4 DATED MAY 20, 2011 SUPERSEDES RSP A77C4 DATED JUNE 6, 2008 AND STANDARD PLAN A77C4 DATED MAY 1, 2006 - PAGE 47 OF THE STANDARD PLANS BOOK DATED MAY 2006.

REVISED STANDARD PLAN RSP A77C4

2006 REVISED STANDARD PLAN RSP A77C4

3-10-11

DIST	COUNTY	ROUTE	POST MILES TOTAL PROJECT	SHEET NO.	TOTAL SHEETS
03	ED	193	23.4	30	52

Randell D. Hiatt
REGISTERED CIVIL ENGINEER

REGISTERED PROFESSIONAL ENGINEER
Randell D. Hiatt
No. C50200
Exp. 6-30-07
CIVIL
STATE OF CALIFORNIA

October 20, 2006
PLANS APPROVAL DATE

The State of California or its officers or agents shall not be responsible for the accuracy or completeness of electronic copies of this plan sheet.

To accompany plans dated 3-26-12

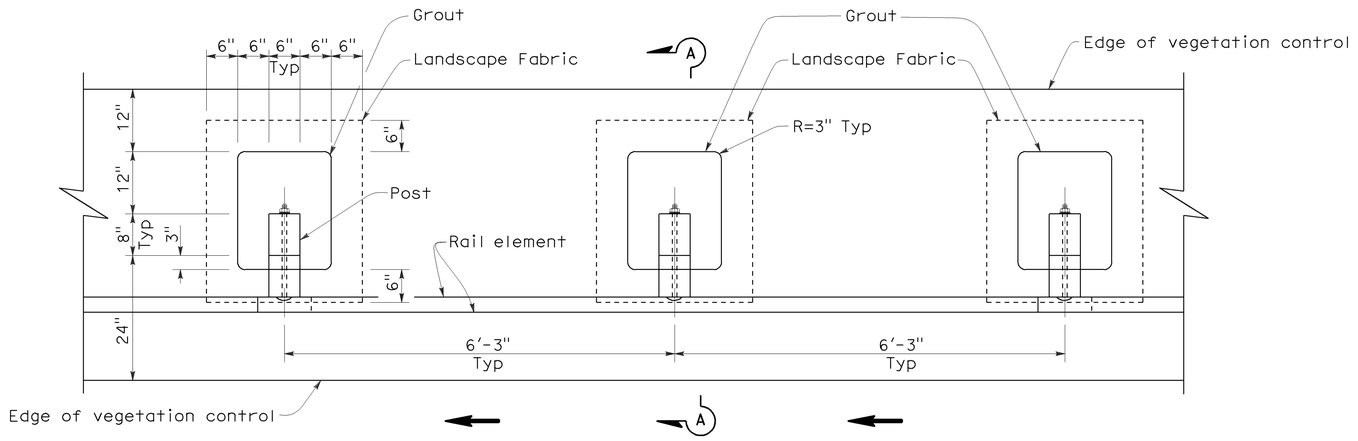

PLAN

NOTES:

1. Where the distance between back of post and hinge point is less than 24", vegetation control to be constructed flush with the back edge of the post.
2. Where dike is constructed under railing, construct vegetation control to back edge of dike. Where paved shoulder is constructed within 24" in front of the post, construct vegetation control to the edge of paved shoulder.
3. Direction of adjacent traffic indicated by ⟵ .

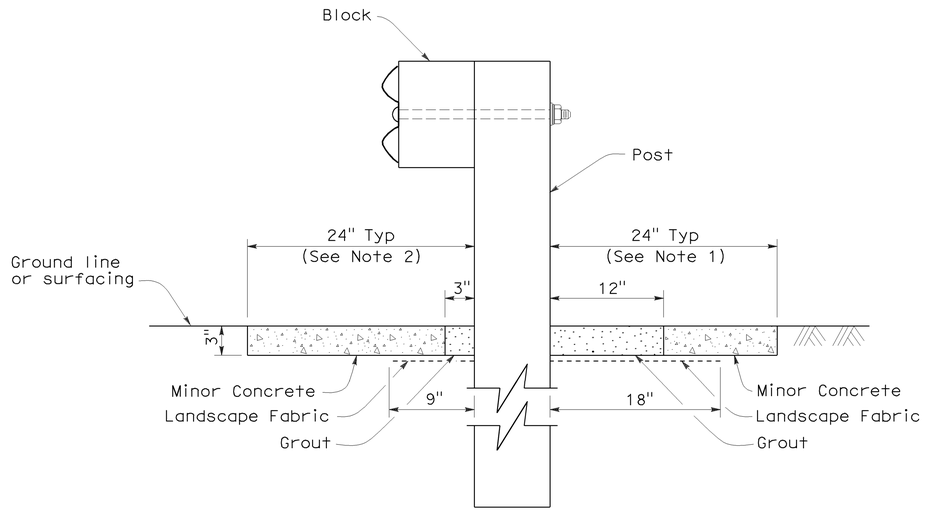

SECTION A-A

STATE OF CALIFORNIA
DEPARTMENT OF TRANSPORTATION

METAL BEAM GUARD RAILING
TYPICAL VEGETATION CONTROL
STANDARD RAILING SECTION

NO SCALE

NSP A77C5 DATED OCTOBER 20, 2006 SUPPLEMENTS THE STANDARD PLANS BOOK DATED MAY 2006.

NEW STANDARD PLAN NSP A77C5

2006 NEW STANDARD PLAN NSP A77C5

7-17-06

DIST	COUNTY	ROUTE	POST MILES TOTAL PROJECT	SHEET NO.	TOTAL SHEETS
03	ED	193	23.4	31	52

Randell D. Hiatt
REGISTERED CIVIL ENGINEER

October 20, 2006
PLANS APPROVAL DATE

REGISTERED PROFESSIONAL ENGINEER
Randell D. Hiatt
No. C50200
Exp. 6-30-07
CIVIL
STATE OF CALIFORNIA

The State of California or its officers or agents shall not be responsible for the accuracy or completeness of electronic copies of this plan sheet.

To accompany plans dated 3-26-12

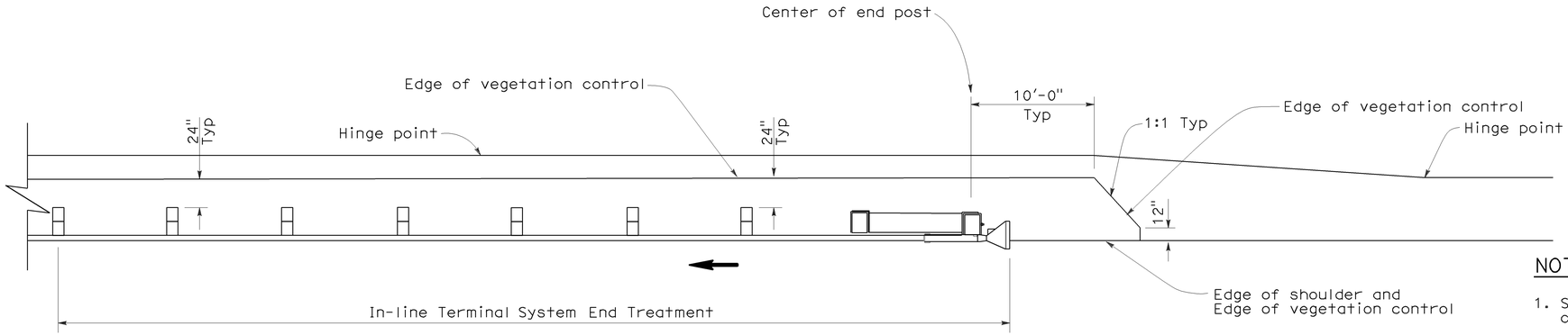

PLAN

NOTES:

1. See New Standard Plan NSP A77C5 for additional vegetation control details.
2. Where the distance between back of post and hinge point is less than 24", vegetation control to be constructed flush with the back edge of the post.
3. Where dike is constructed under railing, construct vegetation control to back edge of dike. Where paved shoulder is constructed within 24" in front of the post, construct vegetation control to the edge of paved shoulder.
4. Direction of adjacent traffic indicated by ←.

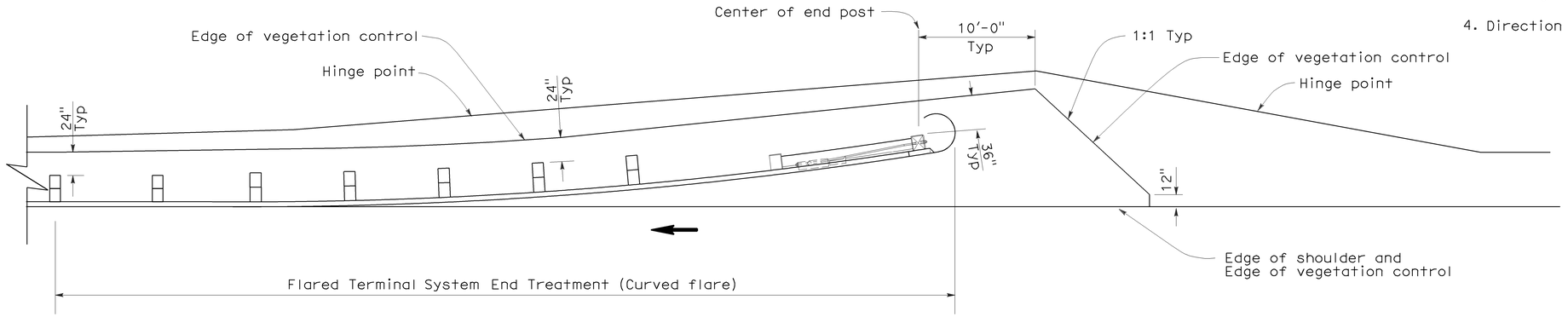

PLAN

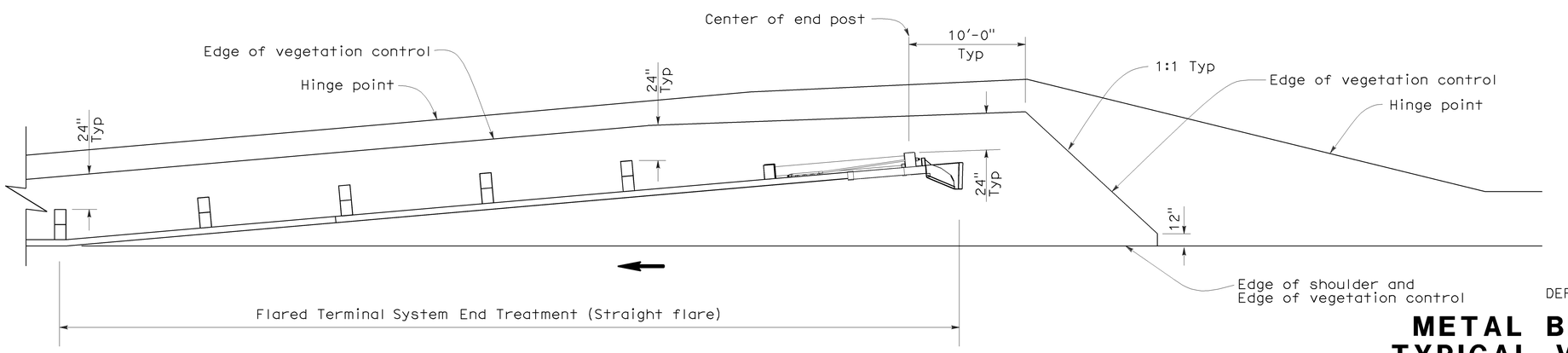

PLAN

STATE OF CALIFORNIA
DEPARTMENT OF TRANSPORTATION

METAL BEAM GUARD RAILING
TYPICAL VEGETATION CONTROL
FOR TERMINAL SYSTEM END TREATMENTS

NO SCALE

NSP A77C6 DATED OCTOBER 20, 2006 SUPPLEMENTS THE STANDARD PLANS BOOK DATED MAY 2006.

NEW STANDARD PLAN NSP A77C6

2006 NEW STANDARD PLAN NSP A77C6

7-17-06

DIST	COUNTY	ROUTE	POST MILES TOTAL PROJECT	SHEET NO.	TOTAL SHEETS
03	ED	193	23.4	32	52

Randell D. Hiatt
REGISTERED CIVIL ENGINEER

June 6, 2008
PLANS APPROVAL DATE

REGISTERED PROFESSIONAL ENGINEER
Randell D. Hiatt
No. C50200
Exp. 6-30-09
CIVIL
STATE OF CALIFORNIA

The State of California or its officers or agents shall not be responsible for the accuracy or completeness of electronic copies of this plan sheet.

To accompany plans dated 3-26-12

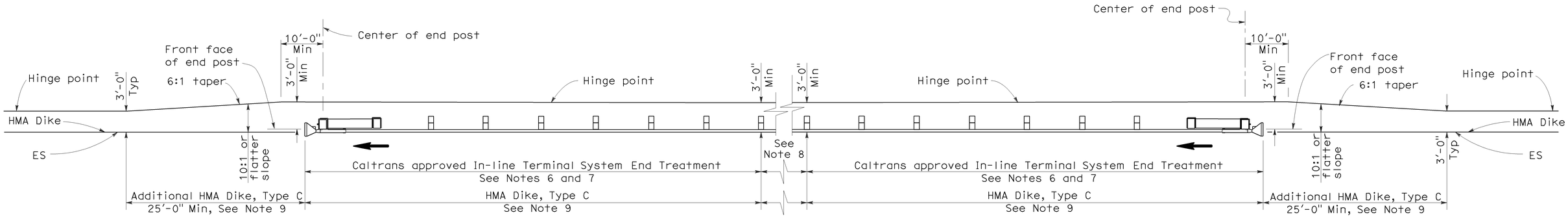

TYPE 11D LAYOUT

(EMBANKMENT GUARD RAILING INSTALLATION WITH IN-LINE END TREATMENT AT EACH END OF RAILING)
See Note 5

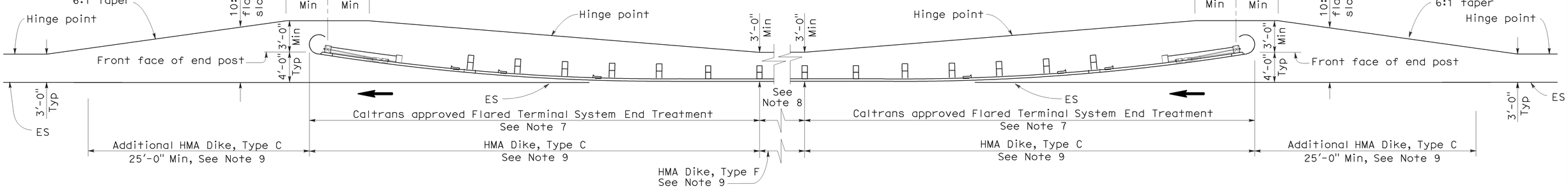

TYPE 11E LAYOUT

(EMBANKMENT GUARD RAILING INSTALLATION WITH FLARED END TREATMENT AT EACH END OF RAILING)
See Note 5

NOTES:

1. Line post, blocks and hardware to be used are shown on Standard Plans A77A1, A77A2, A77B1, A77C1 and A77C2.
2. Guard rail post spacing to be 6'-3" center to center, except as otherwise noted.
3. Except as noted, line posts are 6" x 8" x 6'-0" wood with 6" x 8" x 1'-2" wood blocks. W6 x 9 steel posts, 6'-0" in length, with 6" x 8" x 1'-2" notched wood blocks or plastic blocks may be used for 6" x 8" x 6'-0" wood post with 6" x 8" x 1'-2" wood blocks where applicable and when specified.
4. Direction of adjacent traffic indicated by ➡.
5. Layout Types 11D through 11L, shown on the A77E Series of Revised Standard Plans, are typically used where guard railing is recommended to shield embankment slopes and a crashworthy end treatment is required for both directions of traffic.
6. In-line Terminal System End Treatments are used where site conditions will not accommodate a flared end treatment.
7. The type of terminal system end treatment to be used will be shown on the Project Plans.
8. Dependent on site conditions (embankment height and side slope), construction of additional guard railing (length equal to multiples of 12'-6" with 6'-3" post spacing) may be advisable.
9. Where placement of dike is required with guard railing installations, see Revised Standard Plan RSP A77C4 for dike positioning details.

STATE OF CALIFORNIA
DEPARTMENT OF TRANSPORTATION

METAL BEAM GUARD RAILING TYPICAL LAYOUTS FOR EMBANKMENTS

NO SCALE

RSP A77E2 DATED JUNE 6, 2008 SUPERSEDES STANDARD PLAN A77E2
DATED MAY 1, 2006 - PAGE 49 OF THE STANDARD PLANS BOOK DATED MAY 2006.

REVISED STANDARD PLAN RSP A77E2

2006 REVISED STANDARD PLAN RSP A77E2

12-10-07

DIST	COUNTY	ROUTE	POST MILES TOTAL PROJECT	SHEET NO.	TOTAL SHEETS
03	ED	193	23.4	33	52

Randell D. Hiatt
REGISTERED CIVIL ENGINEER

June 6, 2008
PLANS APPROVAL DATE

REGISTERED PROFESSIONAL ENGINEER — Randell D. Hiatt — No. C50200 — Exp. 6-30-09 — CIVIL — STATE OF CALIFORNIA

The State of California or its officers or agents shall not be responsible for the accuracy or completeness of electronic copies of this plan sheet.

To accompany plans dated 3-26-12

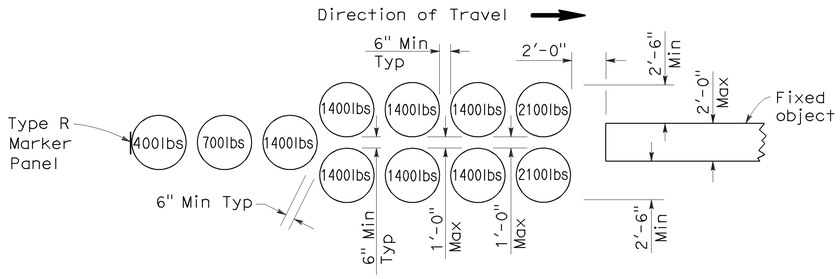

ARRAY 'U11'

Approach speed less than 45 mph

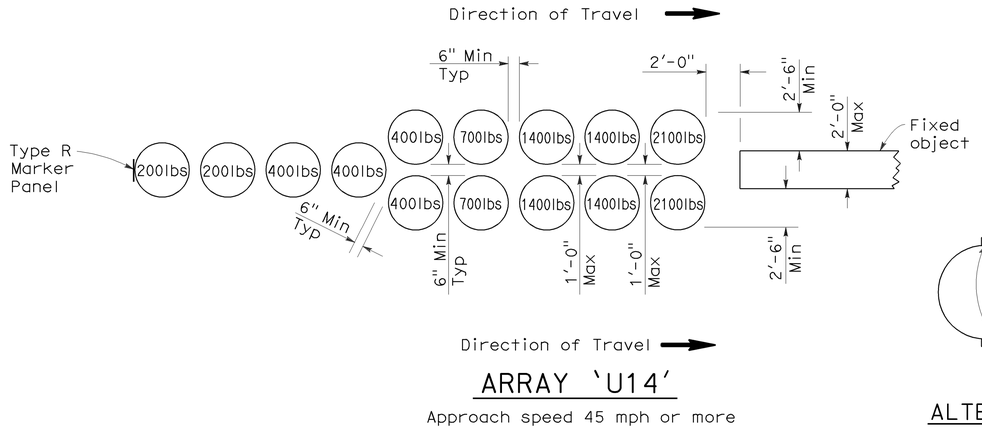

ARRAY 'U14'

Approach speed 45 mph or more

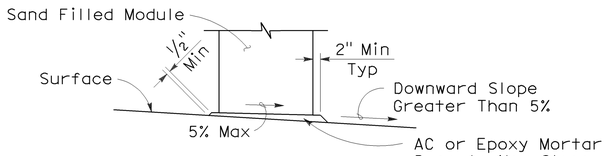

ELEVATION

SLOPED SEAT DETAIL

(See Note 4)

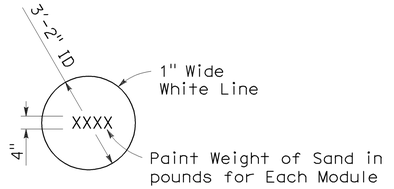

PAINTING DETAIL

(See Note 5)

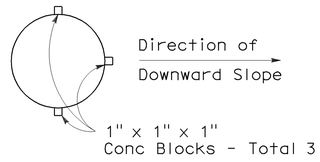

ALTERNATIVE 1

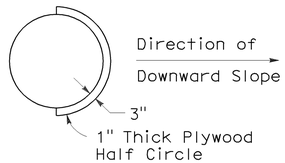

ALTERNATIVE 2

PLAN

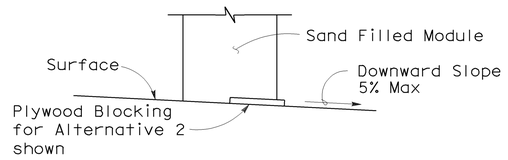

ELEVATION

BRIDGE DECK MODULE BLOCKING DETAILS

(See Note 6)

NOTES:

1. (XXX) Indicates module location and mass of sand in pounds for each module. Module spacing is based on the greater diameter of the modules.
2. All sand weights are nominal.
3. Each module is to contain amount of sand indicated, supported according to the manufacturer's instructions.
4. Modules shall be placed on asphalt concrete, epoxy mortar or concrete surface. Modules to be placed on surfacing with greater than 5% downward slope shall be seated as shown.
5. Mass of sand and outline of each module shall be painted on the surface at each module location.
6. Module blocking, epoxied to the deck surface, is required for all modules placed on bridge decks. Two acceptable alternatives are shown. Other alternatives recommended by the manufacturer and approved by the Engineer will be accepted.
7. Place the top of the Type R marker panel 1" below the module lid.
8. Approach speeds indicated conform to NCHRP Report criteria.

STATE OF CALIFORNIA
DEPARTMENT OF TRANSPORTATION

CRASH CUSHION, SAND FILLED (UNIDIRECTIONAL)

NO SCALE

RSP A81A DATED JUNE 6, 2008 SUPERSEDES STANDARD PLAN A81A
DATED MAY 1, 2006 - PAGE 99 OF THE STANDARD PLANS BOOK DATED MAY 2006.

REVISED STANDARD PLAN RSP A81A

2006 REVISED STANDARD PLAN RSP A81A

5-15-08

DIST	COUNTY	ROUTE	POST MILES TOTAL PROJECT	SHEET NO.	TOTAL SHEETS
03	ED	193	23.4	34	52

Randell D. Hiatt
REGISTERED CIVIL ENGINEER

June 6, 2008
PLANS APPROVAL DATE

REGISTERED PROFESSIONAL ENGINEER — Randell D. Hiatt — No. C50200 — Exp. 6-30-09 — CIVIL — STATE OF CALIFORNIA

The State of California or its officers or agents shall not be responsible for the accuracy or completeness of electronic copies of this plan sheet.

To accompany plans dated 3-26-12

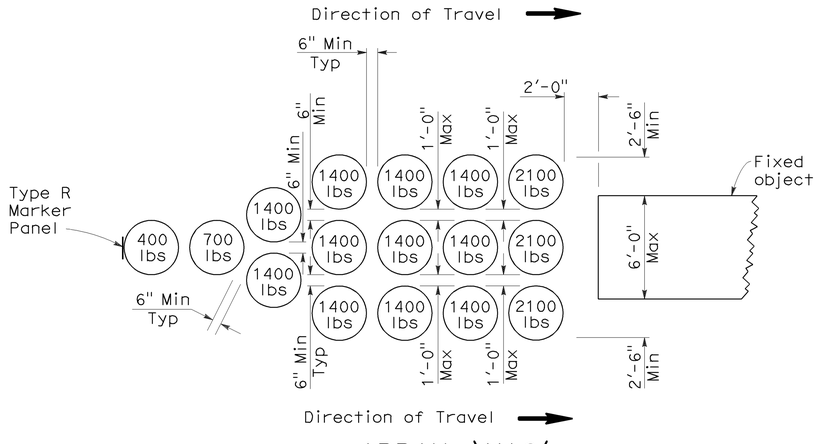

ARRAY 'U16'

Approach speed less than 45 mph

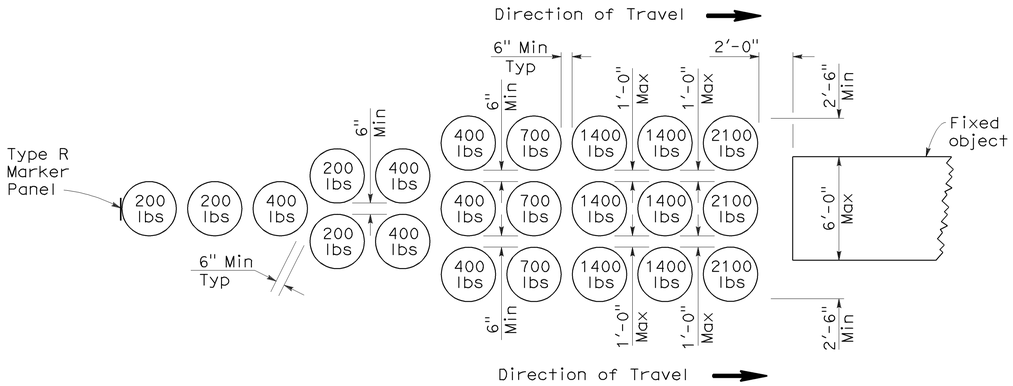

ARRAY 'U21'

Approach speed 45 mph or more

NOTES:

1. (XXX) Indicates module location and weight of sand in pounds for each module. Module spacing is based on the greater diameter of the modules.
2. All sand weights are nominal.
3. Each module is to contain amount of sand indicated, supported according to the manufacturer's instructions.
4. Modules shall be placed on asphalt concrete, epoxy mortar or concrete surface. Modules to be placed on surfacing with greater than 5% downward slope shall be seated as shown.
5. Mass of sand and outline of each module shall be painted on the surface at each module location.
6. Module blocking, epoxied to the deck surface, is required for all modules placed on bridge decks. Two acceptable alternatives are shown. Other alternatives recommended by the manufacturer and approved by the Engineer will be accepted.
7. Place the top of the Type R marker panel 1" below the module lid.
8. Approach speeds indicated conform to NCHRP Report criteria.

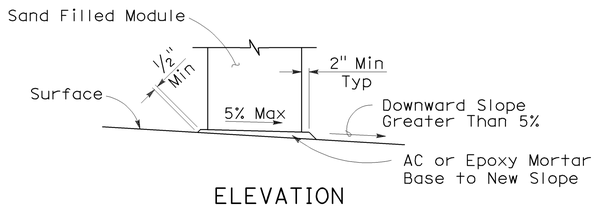

ELEVATION

SLOPED SEAT DETAIL

(See Note 4)

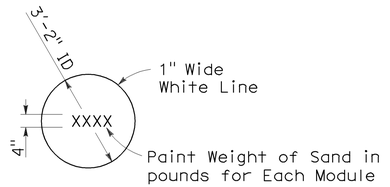

PAINTING DETAIL

(See Note 5)

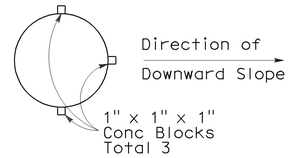

ALTERNATIVE 1

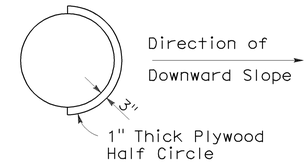

ALTERNATIVE 2

PLAN

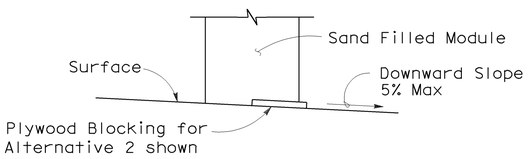

ELEVATION

BRIDGE DECK MODULE BLOCKING DETAILS

(See Note 6)

STATE OF CALIFORNIA
DEPARTMENT OF TRANSPORTATION

CRASH CUSHION, SAND FILLED (UNIDIRECTIONAL)

NO SCALE

RSP A81B DATED JUNE 6, 2008 SUPERSEDES STANDARD PLAN A81B
DATED MAY 1, 2006 - PAGE 100 OF THE STANDARD PLANS BOOK DATED MAY 2006.

REVISED STANDARD PLAN RSP A81B

2006 REVISED STANDARD PLAN RSP A81B

5-15-08

DIST	COUNTY	ROUTE	POST MILES TOTAL PROJECT	SHEET NO.	TOTAL SHEETS
03	ED	193	23.4	35	52

Randell D. Hiatt
REGISTERED CIVIL ENGINEER

June 6, 2008
PLANS APPROVAL DATE

REGISTERED PROFESSIONAL ENGINEER
Randell D. Hiatt
No. C50200
Exp. 6-30-09
CIVIL
STATE OF CALIFORNIA

The State of California or its officers or agents shall not be responsible for the accuracy or completeness of electronic copies of this plan sheet.

To accompany plans dated 3-26-12

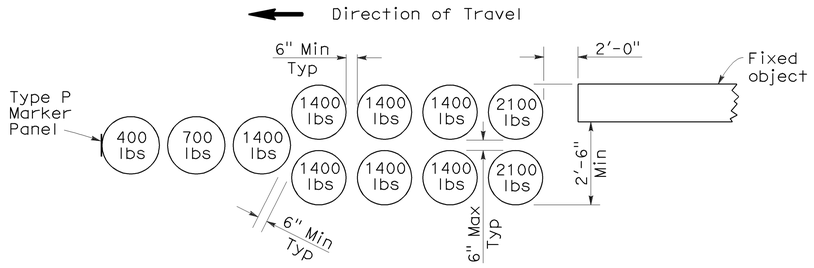

ARRAY 'B11'

Approach speed less than 45 mph

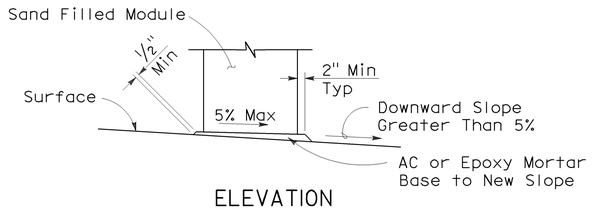

ELEVATION

SLOPED SEAT DETAIL

(See Note 5)

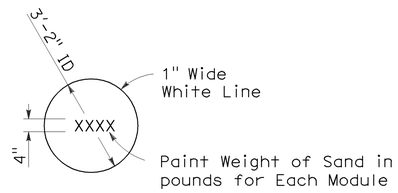

PAINTING DETAIL

(See Note 6)

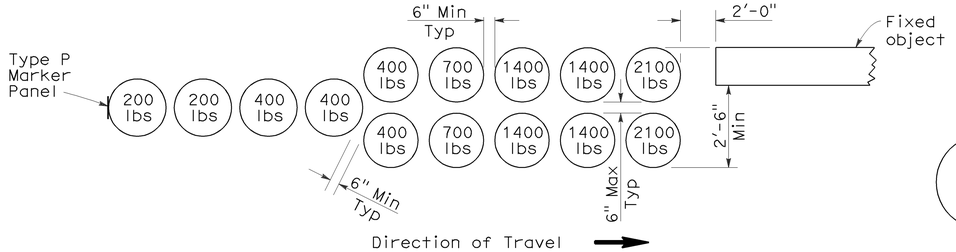

ARRAY 'B14'

Approach speed 45 mph or more

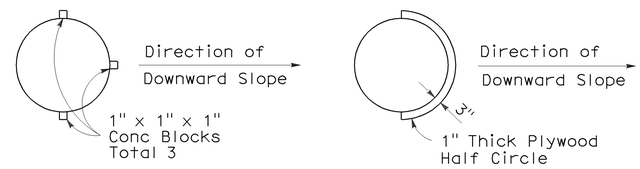

PLAN

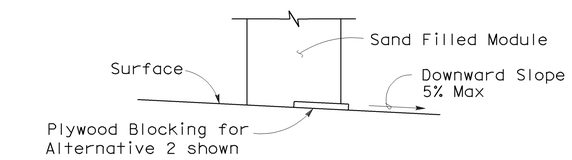

ELEVATION

BRIDGE DECK MODULE BLOCKING DETAILS

(See Note 7)

NOTES:

1. (XXX) Indicates module location and weight of sand in pounds for each module. Module spacing is based on the greater diameter of the module.
2. All sand weights are nominal.
3. Each module is to contain amount of sand indicated, supported according to the manufacturer's instructions.
4. Bidirectional crash cushion arrays may be angled toward approaching traffic. Amount of angle not to exceed 10 degrees.
5. Modules shall be placed on asphalt concrete, epoxy mortar or concrete surface. Modules to be placed on surfacing with greater than 5% downward slope shall be seated as shown.
6. Mass of sand and outline of each module shall be painted on the surface at each module location.
7. Module blocking, epoxied to the deck surface, is required for all modules placed on bridge decks. Two acceptable alternatives are shown. Other alternatives recommended by the manufacturer and approved by the Engineer will be accepted.
8. Place the Type P marker panel so that the bottom of the panel is at the bottom of the module.
9. Approach speeds indicated conform to NCHRP Report criteria.

STATE OF CALIFORNIA
DEPARTMENT OF TRANSPORTATION

CRASH CUSHION, SAND FILLED (BIDIRECTIONAL)

NO SCALE

RSP A81C DATED JUNE 6, 2008 SUPERSEDES STANDARD PLAN A81C
DATED MAY 1, 2006 - PAGE 101 OF THE STANDARD PLANS BOOK DATED MAY 2006.

REVISED STANDARD PLAN RSP A81C

2006 REVISED STANDARD PLAN RSP A81C

5-15-08

DIST	COUNTY	ROUTE	POST MILES TOTAL PROJECT	SHEET NO.	TOTAL SHEETS
03	ED	193	23.4	36	52

Robert B Schott
LICENSED LANDSCAPE ARCHITECT

April 3, 2009
PLANS APPROVAL DATE

The State of California or its officers or agents shall not be responsible for the accuracy or completeness of electronic copies of this plan sheet.

LICENSED LANDSCAPE ARCHITECT — Robert B. Schott 3825 — Registration Date 11-30-10 — Renewal Date 2-25-09 — Date — STATE OF CALIFORNIA

To accompany plans dated 3-26-12

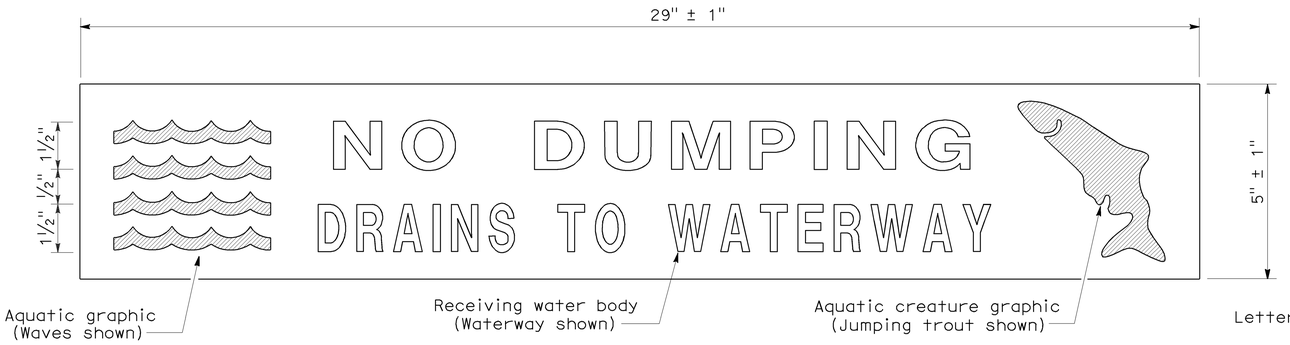

PLAN
DRAINAGE INLET MARKER
(PREFABRICATED THERMOPLASTIC)

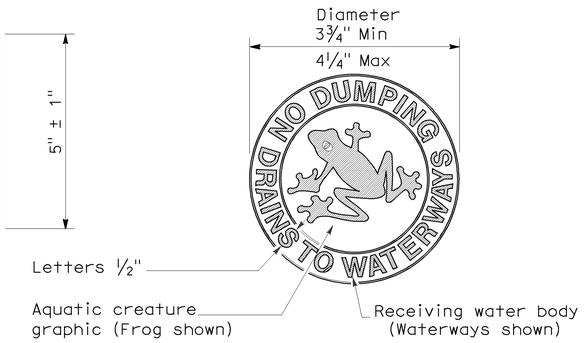

PLAN
DRAINAGE INLET MARKER
(MEDALLION)

PLAN
DRAINAGE INLET MARKER
(STAMPED CONCRETE IMPRINT)

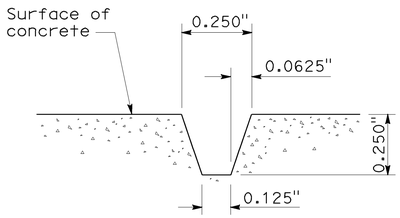

SECTION A-A
STAMPED CONCRETE
IMPRINT DETAIL

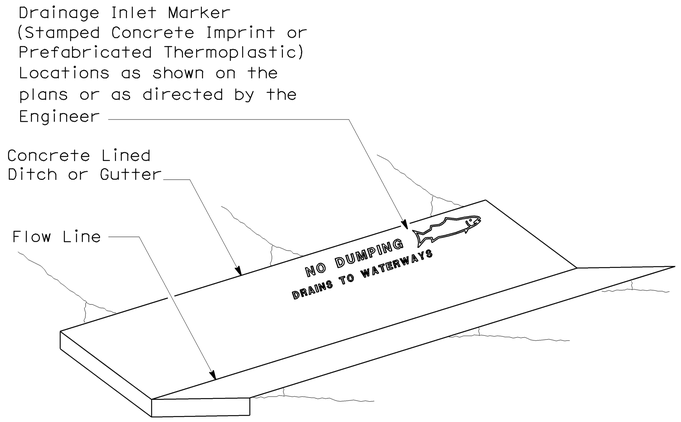

PERSPECTIVE
DRAINAGE INLET MARKER ON
CONCRETE LINED DITCH

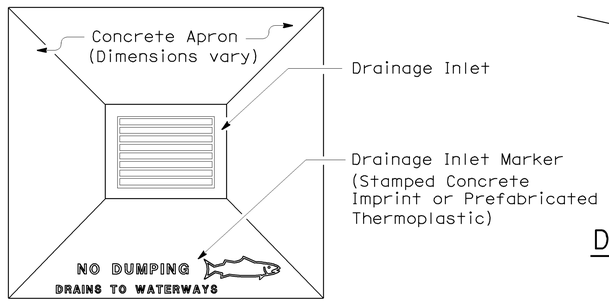

PLAN
DRAINAGE INLET MARKER ON
DRAINAGE INLET APRON

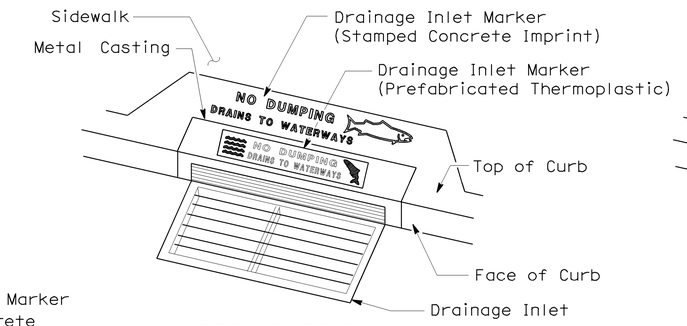

PERSPECTIVE
DRAINAGE INLET MARKER ON
DRAINAGE INLET

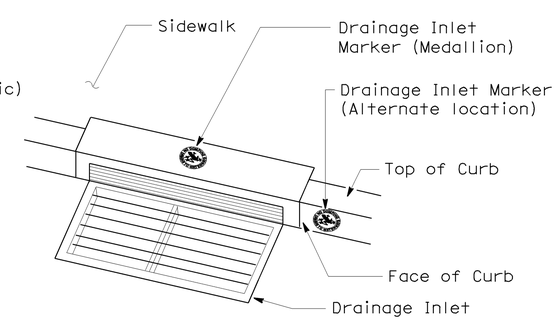

PERSPECTIVE
DRAINAGE INLET MARKER (MEDALLION)
ON DRAINAGE INLET

STATE OF CALIFORNIA
DEPARTMENT OF TRANSPORTATION

DRAINAGE INLET MARKERS

NO SCALE

NSP D71 DATED APRIL 3, 2009 SUPPLEMENTS
THE STANDARD PLANS BOOK DATED MAY 2006.

NEW STANDARD PLAN NSP D71

2006 NEW STANDARD PLAN NSP D71

7-24-08

DIST	COUNTY	ROUTE	POST MILES TOTAL PROJECT	SHEET NO.	TOTAL SHEETS
03	ED	193	23.4	37	52

Raymond Don Tsztoo
REGISTERED CIVIL ENGINEER

January 18, 2008
PLANS APPROVAL DATE

REGISTERED PROFESSIONAL ENGINEER — Raymond Don Tsztoo — No. C37332 — Exp. 6-30-08 — CIVIL — STATE OF CALIFORNIA

The State of California or its officers or agents shall not be responsible for the accuracy or completeness of electronic copies of this plan sheet.

To accompany plans dated 3-26-12

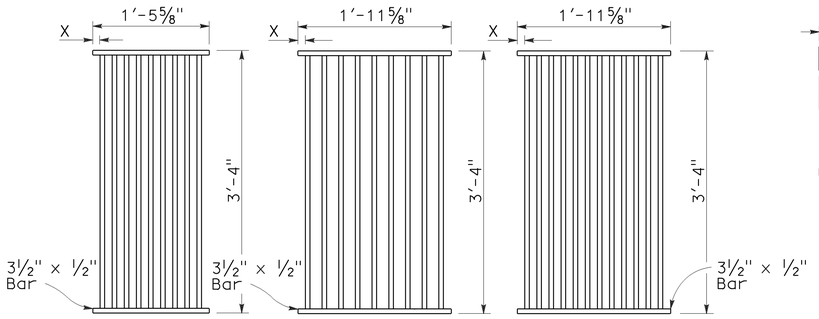

TYPE 18-9

1⅜" Clear spacing. Use within the roadbed on highways where bicycles and pedestrians are excluded.

TYPE 24-9

2" Clear spacing. Use in locations off the roadbed on all types of highways.

TYPE 24-12

1⅜" Clear spacing. Use within the roadbed on highways where bicycles and pedestrians are excluded.

RECTANGULAR GRATE DETAILS

(See table below)

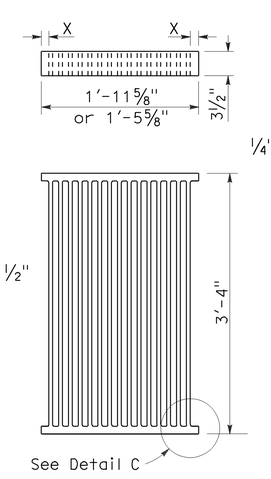

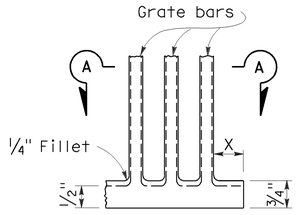

DETAIL C

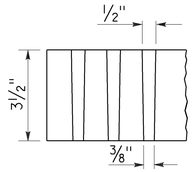

SECTION A-A

ALTERNATIVE CAST NODULAR IRON GRATE OR CAST STEEL GRATE

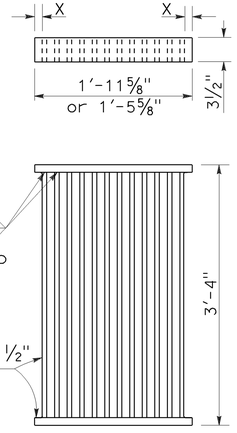

ALTERNATIVE WELDED GRATE

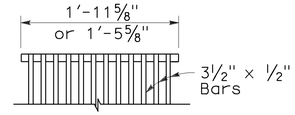

CAST END BLOCK

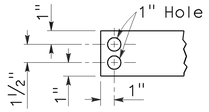

END OF BAR

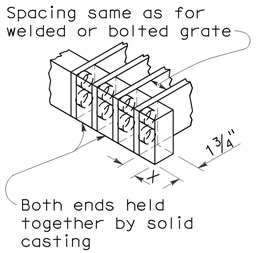

ALTERNATIVE CAST NODULAR IRON OR CAST STEEL END BLOCK GRATE

NOTES:

1. Grate type numbers refer to approximate width of grate in inches and number of bars, respectively.
2. Contractor has the option of using cast nodular iron, cast steel, welded, bolted, or cast end block grate.
3. See Special Provisions for requirements pertaining to galvanizing or asphalt dipping of grates and frames.
4. Rounded top of bars optional on all grates.
5. Pipe inlets with a grate shall be placed so that bars parallel direction of principle surface flow.
6. Full penetration butt welds may be substituted for the fillet welds on all anchors.
7. Standard square, hexagon, round or equivalent headed anchors may be substituted for the right angle hooks on the anchors shown on this plan.
8. Grate and frame weights are based on welded grates (weights of face angles, steps, protection bars, etc. are not included).

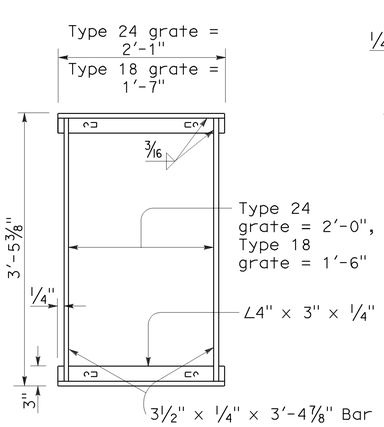

TYPICAL FRAME

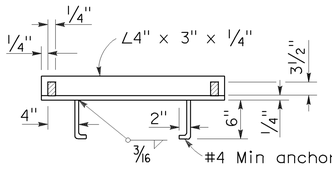

CROSS SECTION
(Thru frame)

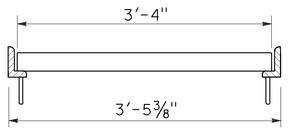

LONGITUDINAL SECTION
(Thru frame and grate)

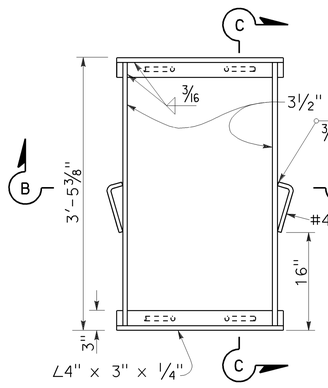

TYPICAL FRAME

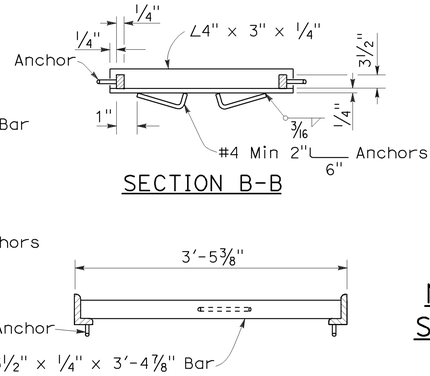

SECTION B-B

SECTION C-C

ALTERNATIVE ANCHOR FOR RECTANGULAR FRAME

(For details not shown, See Rectangular Frame Details)

RECTANGULAR FRAME DETAILS

(For all rectangular grates)

GRATE BAR SPACING TABLE

TYPE	No. OF BARS	CLEAR BAR SPACING	X
18-9	9	1⅜"	1 1/16"
24-9	9	2"	1 3/16"
24-12	12	1⅜"	1¼"

INLET TYPE	COVER TYPE	WEIGHT LB
OS	PLATE	174
OL-7	PLATE	170
OL-10	PLATE	170
OL-14	PLATE	170
OL-21	PLATE	170
OCP	PLATE	112
OCPI	PLATE	112
OCPI	REDWOOD	42
OMP	PLATE	177
OMPI	PLATE	177

INLET TYPE	GRATE TYPE	No. OF GRATES	WEIGHT LB
GDO	24-12	2	634
GOL-7	24-12	1	326
GOL-10	24-12	1	326
GO,G1,G2,G3,G4 (TYPE 24)	24-9	1	263
	24-12	1	326
G4 (TYPE 18),G5,G6	18-9	1	249
GT1	18-9	2	498
GT2	18-9	2	498
GT3	24-12	2	652
GT4	24-12	2	652
TRASH RACK			22

BASIS FOR MISC IRON & STEEL FINAL PAY WEIGHTS FOR DRAINAGE INLETS

(See General Notes, No 8)

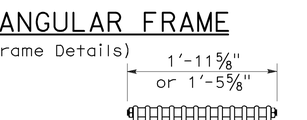

BOLTED END BLOCK

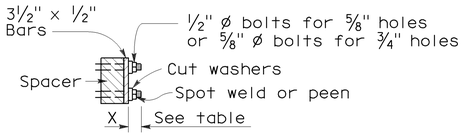

BOLTING DETAIL

ALTERNATIVE BOLTED GRATE

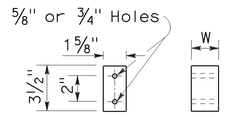

BAR SPACER

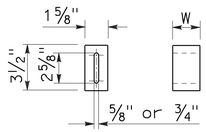

ALTERNATIVE SPACER
W = 1⅜" or 2"

STATE OF CALIFORNIA
DEPARTMENT OF TRANSPORTATION

GRATE DETAILS

NO SCALE

RSP D77A DATED JANUARY 18, 2008 SUPERSEDES STANDARD PLAN D77A DATED MAY 1, 2006 - PAGE 155 OF THE STANDARD PLANS BOOK DATED MAY 2006.

REVISED STANDARD PLAN RSP D77A

2006 REVISED STANDARD PLAN RSP D77A

12-14-07

ANNULAR AND HELICAL PROFILE

COUPLING TYPE	PIPE CORRUGATION	PIPE SIZE	W OR A	PIPE WALL THICKNESS		BAND THICKNESS		BAR AND STRAP (CSP ONLY)				ANGLE						
												DIMENSIONS		BOLTS (No.- Dia)		RIVETS ANGLE TO BAND		SPOT WELDS ANGLE TO BAND
				CSP	CAP	CSP	CAP	STRAP THICKNESS	BOLTS Dia	BAR Dia	BAR YIELD STRENGTH	CSP	CAP	CSP	CAP	CSP	CAP	CSP
TWO PIECE INTEGRAL FLANGE	1½′ × ¼"	6"-10"	7"	0.052"-0.079"	0.048"-0.060"	0.052"	0.060"							2-⅜"	2-⅜"			
		12"-18"	7"	0.052"-0.079"		0.064"								2-½"				
	2⅔" × ½"	12"-24"	7"	0.052"-0.079"	0.060"-0.105"	0.064"	0.060"							2-½"	2-½"			
UNIVERSAL	2⅔" × ½"	THROUGH 36"	12"	0.052"-0.138"	0.060"-0.135"	0.052"	0.060"					2" × 2" × 3/16"	2" × 2" × 3/16"	3-½"	3-½"	3-⅜"	3-⅜"	3-½"
		42"-60"	12"	0.052"-0.168"	0.075"-0.164"	0.052"	0.060"					2" × 2" × 3/16"	2" × 2" × 3/16"	3-½"	3-½"	3-⅜"	3-⅜"	5-½"
		THROUGH 72"	12"	0.052"-0.168"	0.164"	0.052"	0.105"	0.079"	½"	⅞"	32 ksi	2" × 2" × 3/16"	2" × 2" × 3/16"	3-½"	3-½"	3-⅜"	3-⅜"	5-½"
		78"-84"	16¼"	0.168"		0.079"		DOUBLE 0.079"	½"	⅞"	32 ksi							
ANNULAR	2⅔" × ½"	THROUGH 36"	7"	0.064"-0.138"	0.060"-0.135"	0.052"	0.060"	0.079"	½"	⅞"	32 ksi	2" × 2" × 3/16"	2" × 2" × 3/16"	2-½"	2-½"	3-⅜"	3-⅜"	3-½"
		42"-72"	12"	0.064"-0.168"	0.075"-0.164"	0.052"	0.105"	0.079"	½"	⅞"	32 ksi	2" × 2" × 3/16"	2" × 2" × 3/16"	3-½"	3-½"	3-⅜"	3-⅜"	5-½"
		78"-84"	12"	0.168"		0.079"		0.109"	½"	⅞"	45 ksi	2" × 2" × 3/16"		3-½"		3-⅜"		5-½"
	3" × 1"	48"-90"	14"	0.064"-0.109"		0.052"		0.079"	½"	⅞"	32 ksi	2" × 2" × 3/16"		3-½"		3-⅜"		5-½"
		96"-120"	14"	0.079"-0.109"		0.052"		0.109"	½"	⅞"	45 ksi	2" × 2" × 3/16"		3-½"		4-⅜"		
		42"-108"	14"		0.060"-0.135"		0.060"						2" × 2" × 3/16"		3-½"		3-⅜"	
HELICAL	2⅔" × ½"	THROUGH 36"	12"	0.052"-0.138"	0.060"-0.135"	0.052"	0.060"	0.079"	½"	⅞"	32 ksi	2" × 2" × 3/16"	2" × 2" × 3/16"	3-½"	3-½"	3-⅜"	3-⅜"	3-½"
		42"-72"	12"	0.052"-0.168"	0.075"-0.164"	0.052"	0.060"	0.079"	½"	⅞"	32 ksi	2" × 2" × 3/16"	2" × 2" × 3/16"	3-½"	3-½"	3-⅜"	3-⅜"	5-½"
		78"-84"	12"	0.168"		0.079"		0.109"	½"	⅞"	45 ksi	2" × 2" × 3/16"		3-½"		3-⅜"		5-½"
	3" × 1"	48"-90"	14"	0.064"-0.109"		0.052"		0.079"	½"	⅞"	32 ksi	2" × 2" × 3/16"		3-½"		3-⅜"		5-½"
		96"-120"	14"	0.079"-0.109"		0.052"		0.109"	½"	⅞"	45 ksi	2" × 2" × 3/16"		3-½"		4-⅜"		
		42"-108"	14"		0.060"-0.135"		0.060"						2" × 2" × 3/16"		3-½"		3-⅜"	
HUGGER	2⅔" × ½" REROLLED END	12"-54"	4"	0.052"-0.109"		0.052"						2½" × 1½" × 3/16"	2½" × 1½" × 3/16"	1-½"				3-½"
		60"-66"	4"	0.109"		0.064"						2½" × 1½" × 3/16"	2½" × 1½" × 3/16"	1-½"				3-½"
		36"-48"	4"	0.138"		0.064"						2½" × 1½" × 3/16"	2½" × 1½" × 3/16"	1-½"				3-½"
		THROUGH 72"	10½"	0.052"-0.168"		0.052"		0.079"	½"	⅞"	32 ksi							
		78"-84"	10½"	0.168"		0.079"		0.109"	½"	⅞"	45 ksi							
	3" × 1" REROLLED END	48"-90"	10½"	0.064"-0.109"		0.052"		0.079"	½"	⅞"	32 ksi							
		96"-120"	10½"	0.079"-0.109"		0.052"		0.109"	½"	⅞"	45 ksi							
	5" × 1" REROLLED END	48"-66"	7½"	0.064"-0.109"		0.064"		0.079"	½"	⅞"	32 ksi	2½" × 1½" × 3/16"	2½" × 1½" × 3/16"	1-½"				3-½"
		72"-90"	7½"	0.064"-0.079"		0.064"		0.079"	½"	⅞"	32 ksi	2½" × 1½" × 3/16"	2½" × 1½" × 3/16"	1-½"				3-½"
		48"-90"	7½"	0.064"-0.138"		0.064"		0.079"	½"	⅞"	32 ksi							
		48"-120"	12" SEE	0.064"-0.109"		0.064"		0.079"	½"	⅞"	32 ksi							
		48"-84"	12" NOTE	0.138"		0.064"		0.079"	½"	⅞"	32 ksi							
		90"-120"	12" 11	0.138"		0.064"		DOUBLE 0.079"	½"	⅞"	32 ksi							

SPIRAL RIB PROFILE

COUPLING TYPE	PIPE CORRUGATION	PIPE SIZE	W	PIPE WALL THICKNESS		BAND THICKNESS		BAR AND STRAP (SSRP ONLY)				ANGLE						
												DIMENSIONS		BOLTS (No.- Dia)		RIVETS ANGLE TO BAND		SPOT WELDS ANGLE TO BAND
				SSRP	ASRP	SSRP	ASRP	STRAP THICKNESS	BOLTS Dia	BAR Dia	BAR YIELD STRENGTH	SSRP	ASRP	SSRP	ASRP	SSRP	ASRP	SSRP
ANNULAR	2⅔" × ½" * REROLLED END	24"-36"	12"	0.064"-0.109"	0.060"-0.105"	0.052"	0.060"	0.079"	½"	⅞"	32 ksi	2" × 2" × 3/16"	2" × 2" × 3/16"	3-½"	3-½"	3-⅜"	3-⅜"	5-½"
		42"-60"	12"	0.064"-0.109"	0.075"-0.105"	0.052"	0.105"	0.079"	½"	⅞"	32 ksi	2" × 2" × 3/16"	2" × 2" × 3/16"	3-½"	3-½"	3-⅜"	3-⅜"	5-½"
		66"-72"	12"	0.064"-0.109"		0.052"		0.079"	½"	⅞"	32 ksi	2" × 2" × 3/16"	2" × 2" × 3/16"	3-½"	3-½"	3-⅜"	3-⅜"	5-½"
		78"-114"	12"	0.079"-0.109"		0.079"		0.109"	½"	⅞"	45 ksi	2" × 2" × 3/16"	2" × 2" × 3/16"	3-½"	3-½"	3-⅜"	3-⅜"	5-½"
HUGGER	2⅔" × ½" * REROLLED END	24"-72"	10½"	0.064"-0.109"		0.052"		0.079"	½"	⅞"	32 ksi							
		78"-84"	10½"	0.109"		0.079"		0.109"	½"	⅞"	45 ksi							

* See Note 14.

14. All profiles of Spiral Rib Pipe (¾" × ¾" ribs at 7½" pitch and ¾" × 1" ribs at 11½" pitch in both steel and aluminum and ¾" × 1" ribs at 8½" pitch in steel only) shall be manufactured with rerolled ends. Corrugation profile of the rerolled ends shall be 2⅔" × ½" annual corrugations with a minimum of two full corrugations at each end.

DIST	COUNTY	ROUTE	POST MILES TOTAL PROJECT	SHEET NO.	TOTAL SHEETS
03	ED	193	23.4	38	52

Raymond Don Tsztoo
REGISTERED CIVIL ENGINEER

June 6, 2008
PLANS APPROVAL DATE

REGISTERED PROFESSIONAL ENGINEER — Raymond Don Tsztoo — No. C37332 — Exp. 6-30-08 — CIVIL — STATE OF CALIFORNIA

The State of California or its officers or agents shall not be responsible for the accuracy or completeness of electronic copies of this plan sheet.

NOTES:

To accompany plans dated 3-26-12

1. All ferrous metal coupling band connection hardware shall be galvanized or electro-plated in accordance with the Standard Specifications.
2. For helically corrugated coupling bands, the connection angles may be oriented parallel to the pipe axis, provided connecting holes are slotted lengthwise sufficiently to allow adjustment for the helix angle.
3. Tension strap may be connected to band with either spot welds or fillet welds that develop minimum required strength of strap.
4. Use 1¼" gage line dimension on attached angle leg for rivets and spot welds.
5. Band thickness shall not be less than:
   a. 3 standard thicknesses lighter than the thickness of the pipe for Corrugated Steel Pipe.
   b. 2 standard thicknesses lighter than the thickness of the pipe and in no case lighter than 0.060" for Corrugated Aluminum Pipe.
6. Dimensions, thicknesses and strengths shown are minimum.
7. For pipe arches use same width band as for round pipe of equal periphery.
8. Fillet welds of equivalent strenght may be substituted for spot welds or rivets.
9. Spot welds shall develop minimum required strength of strap.
10. Pipe with rerolled ends having at least two 2⅔" × ½" annular corrugations at each end with or without an upturned flange may be connected with any of the annular coupling bands shown for pipe of the same diameter and wall thickness and having 2⅔" × ½" corrugations.
11. In the case of H-12 huggerbands, two piece bands are required for diameters through 96" and three piece bands are required for diameters 102" through 120".
12. Two piece bands are required for pipes greater than 42" diameter.
13. The 2¼" × 2" × 0.109" thick galvanized die-formed angle connector may be used in lieu of the 2" × 2" × 3/16" angle connector for standard joints only on pipes through 72" diameter.

STATE OF CALIFORNIA
DEPARTMENT OF TRANSPORTATION

CORRUGATED METAL PIPE COUPLING DETAILS No. 5 STANDARD JOINT

NO SCALE

RSP D97E DATED JUNE 6, 2008 SUPERSEDES STANDARD PLAN D97E
DATED MAY 1, 2006 - PAGE 187 OF THE STANDARD PLANS BOOK DATED MAY 2006.

REVISED STANDARD PLAN RSP D97E

2006 REVISED STANDARD PLAN RSP D97E

4-2-08

DIST	COUNTY	ROUTE	POST MILES TOTAL PROJECT	SHEET NO.	TOTAL SHEETS
03	ED	193	23.4	39	52

LICENSED LANDSCAPE ARCHITECT

April 3, 2009
PLANS APPROVAL DATE

LICENSED LANDSCAPE ARCHITECT
Gregory A. Balzer #2978
02-28-11
Renewal Date
03-04-09
Date
STATE OF CALIFORNIA

The State of California or its officers or agents shall not be responsible for the accuracy or completeness of electronic copies of this plan sheet.

To accompany plans dated 3-26-12

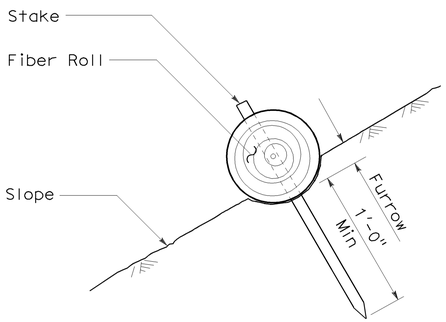

SECTION

FIBER ROLL (TYPE 1)

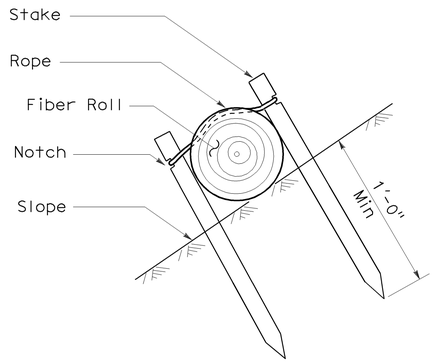

SECTION

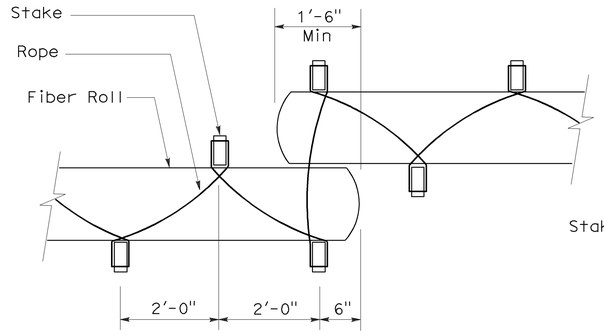

PLAN

FIBER ROLL (TYPE 2)

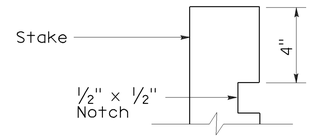

ELEVATION

STAKE NOTCH DETAIL

NOTES:

1. Fiber roll spacing varies depending upon slope inclination.
2. Installations shown in the perspectives are for slope inclination of 10:1 and steeper.

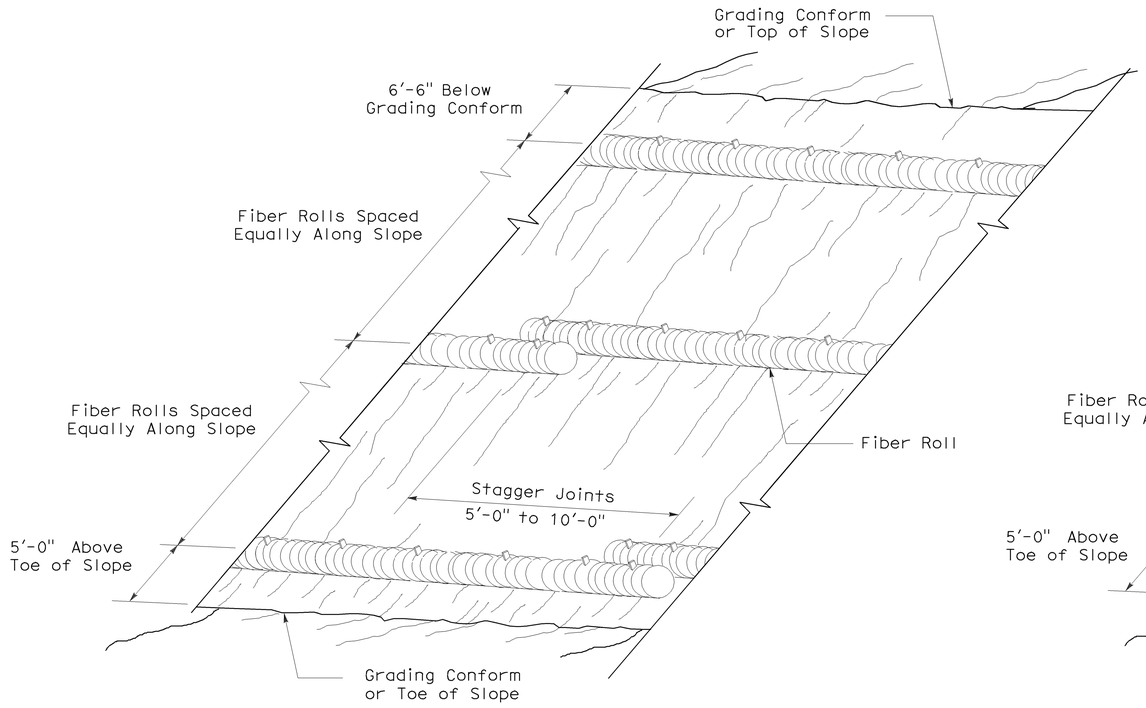

PERSPECTIVE

FIBER ROLL (TYPE 1)

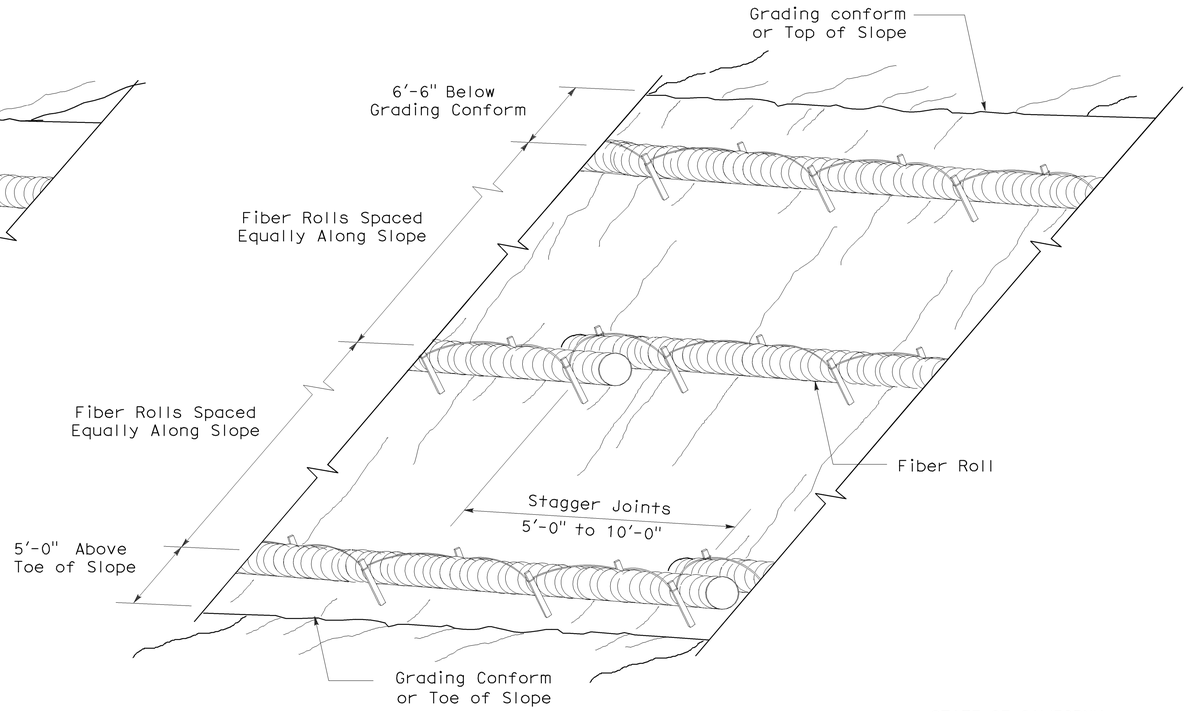

PERSPECTIVE

FIBER ROLL (TYPE 2)

STATE OF CALIFORNIA
DEPARTMENT OF TRANSPORTATION

EROSION CONTROL DETAILS (FIBER ROLL)

NO SCALE

RNSP H51 DATED APRIL 3, 2009 SUPERSEDES NSP H51 DATED DECEMBER 1, 2006 THAT SUPPLEMENTS THE STANDARD PLANS BOOK DATED MAY 2006.

REVISED NEW STANDARD PLAN RNSP H51

2006 REVISED NEW STANDARD PLAN RNSP H51

DIST	COUNTY	ROUTE	POST MILES TOTAL PROJECT	SHEET NO.	TOTAL SHEETS
03	ED	193	23.4	40	52

Gregory A. Balzer
LICENSED LANDSCAPE ARCHITECT

June 5, 2009
PLANS APPROVAL DATE

LICENSED LANDSCAPE ARCHITECT
Gregory A. Balzer 2576
Signature
2-28-11
Renewal Date
5-14-09
Date
STATE OF CALIFORNIA

The State of California or its officers or agents shall not be responsible for the accuracy or completeness of electronic copies of this plan sheet.

To accompany plans dated 3-26-12

NOTE:

1. Fiber Roll/Compost Sock shown for reference purposes only.
2. If transverse rolled erosion control product joints are required on slopes, see Detail B.

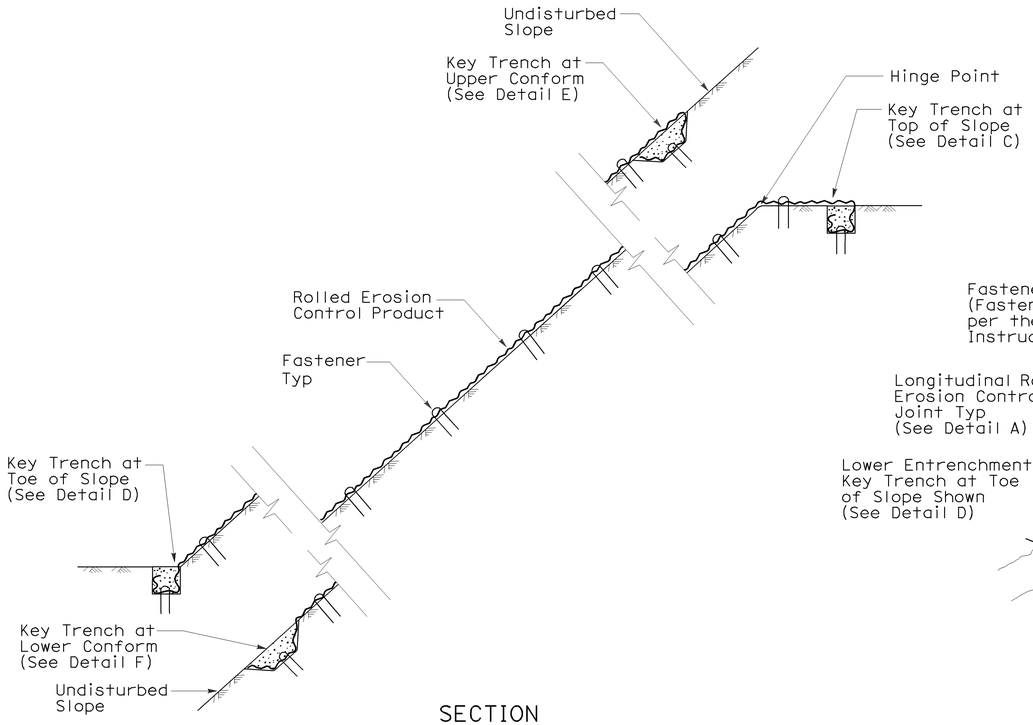

SECTION

ROLLED EROSION CONTROL PRODUCT
ON SLOPE WITH VARIOUS KEY ENTRENCHMENTS

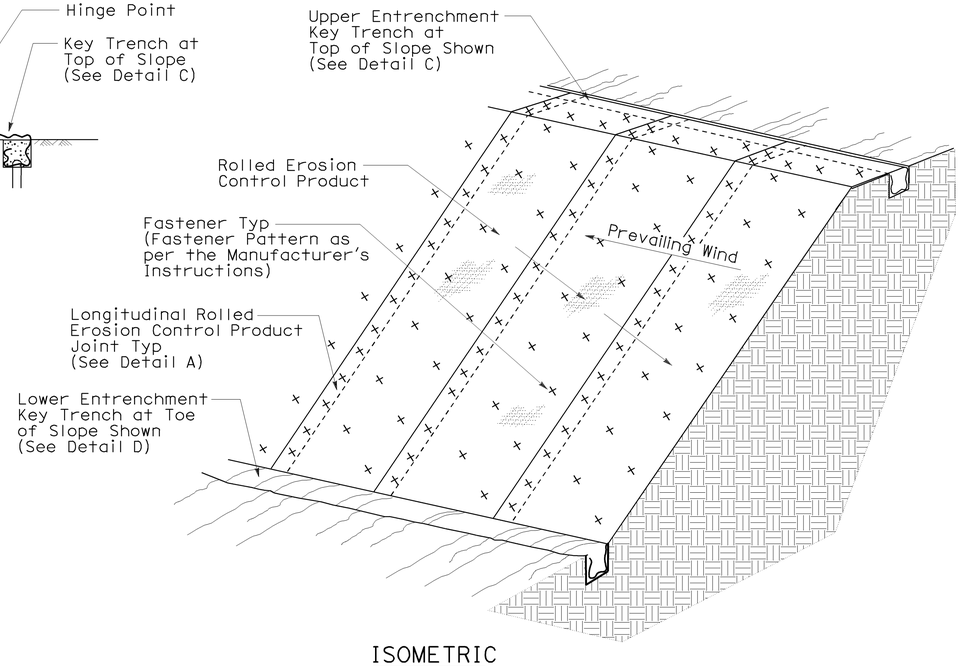

ISOMETRIC

ROLLED EROSION CONTROL PRODUCT
ON SLOPE

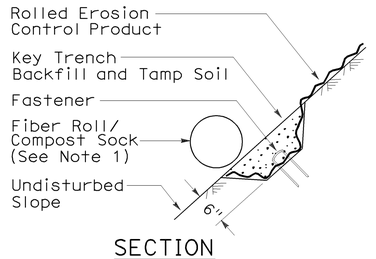

SECTION

DETAIL F
KEY TRENCH AT
LOWER CONFORM

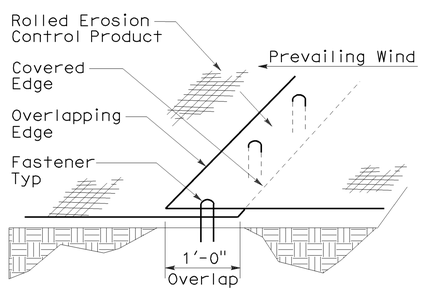

PERSPECTIVE

DETAIL A
LONGITUDINAL ROLLED EROSION
CONTROL PRODUCT JOINT

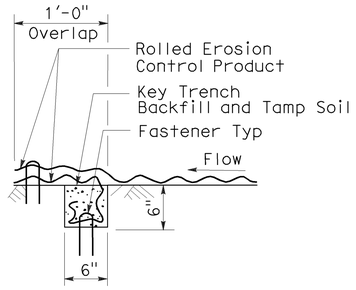

SECTION

DETAIL B
TRANSVERSE ROLLED EROSION
CONTROL PRODUCT JOINT

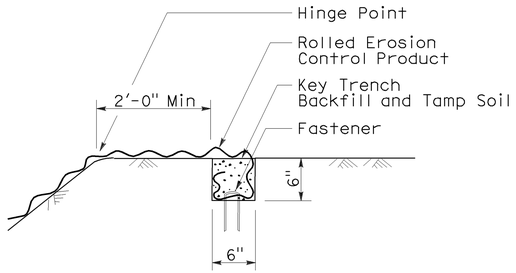

SECTION

DETAIL C
KEY TRENCH AT
TOP OF SLOPE

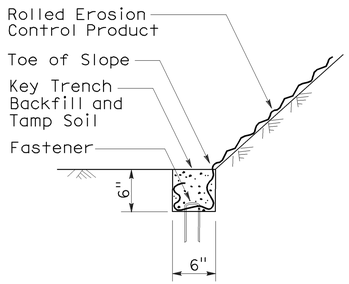

SECTION

DETAIL D
KEY TRENCH AT
TOE OF SLOPE

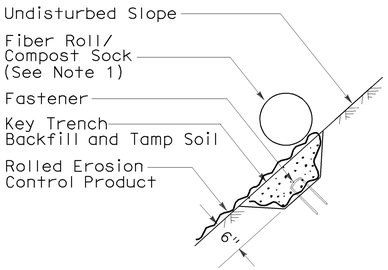

SECTION

DETAIL E
KEY TRENCH AT
UPPER CONFORM

STATE OF CALIFORNIA
DEPARTMENT OF TRANSPORTATION

ROLLED EROSION CONTROL PRODUCT

NO SCALE

NSP H53 DATED JUNE 5, 2009 SUPPLEMENTS
THE STANDARD PLANS BOOK DATED MAY 2006.

NEW STANDARD PLAN NSP H53

2006 NEW STANDARD PLAN NSP H53

3-4-09

DIST	COUNTY	ROUTE	POST MILES TOTAL PROJECT	SHEET NO.	TOTAL SHEETS
03	ED	193	23.4	41	52

Randell D. Hiatt
REGISTERED CIVIL ENGINEER

June 6, 2008
PLANS APPROVAL DATE

REGISTERED PROFESSIONAL ENGINEER — Randell D. Hiatt — No. C50200 — Exp. 6-30-09 — CIVIL — STATE OF CALIFORNIA

The State of California or its officers or agents shall not be responsible for the accuracy or completeness of electronic copies of this plan sheet.

To accompany plans dated 3-26-12

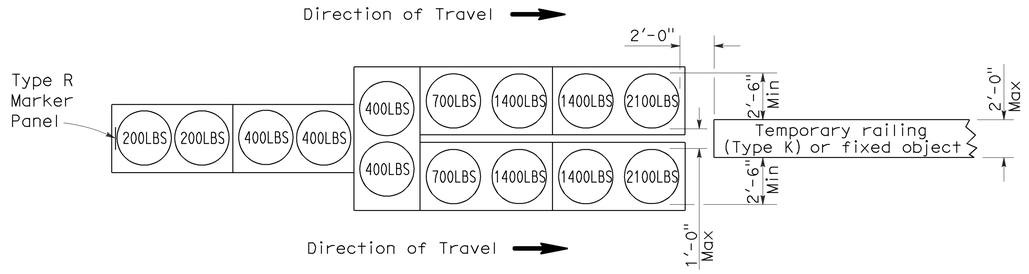

ARRAY 'TU14'

Approach speed 45 mph or more

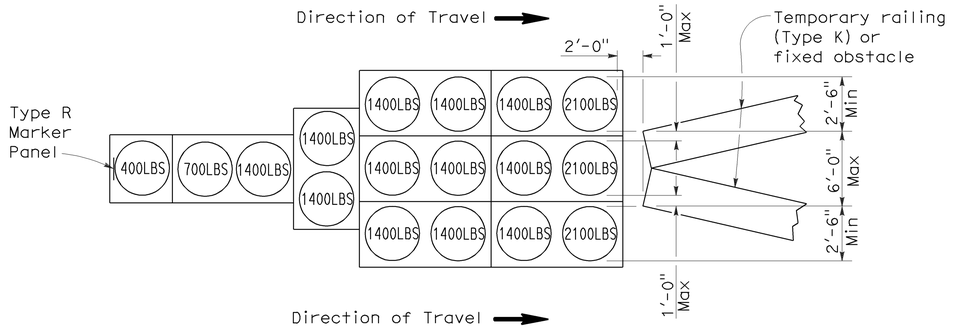

ARRAY 'TU17'

Approach speed less than 45 mph

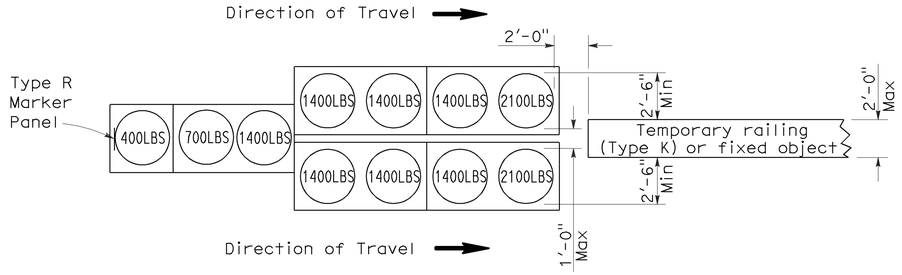

ARRAY 'TU11'

Approach speed less than 45 mph

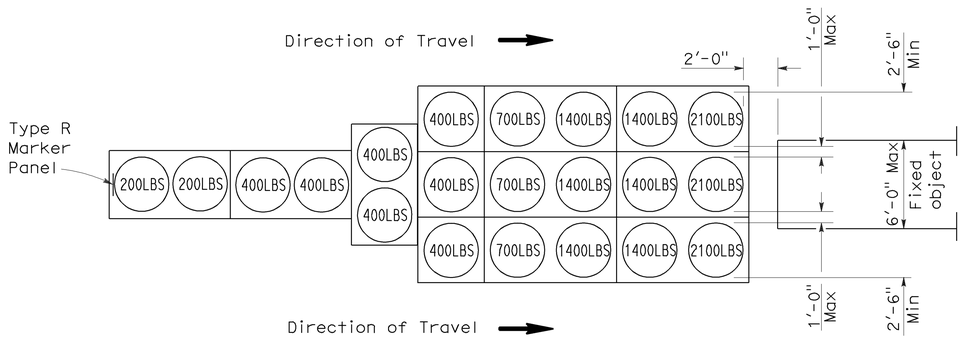

ARRAY 'TU21'

Approach speed 45 mph or more

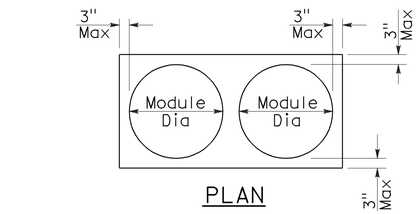

PLAN

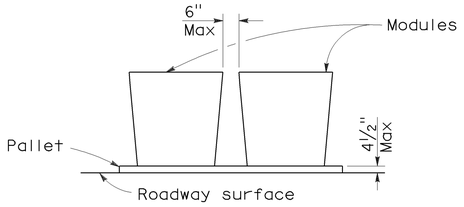

ELEVATION

CRASH CUSHION PALLET DETAIL

See Note 7

NOTES:

1. (XXX) Indicates sand filled module location and weight of sand in pounds for each module. Module spacing is based on the greater diameter of the module.
2. All sand weights are nominal.
3. Temporary crash cushion arrays shall not encroach on the traveled way.
4. Place the top of Type R marker panel 1" below the module lid.
5. Refer to Standard Plan A73B for marker details.
6. Approach speeds indicated conform to NCHRP 350 Report criteria.
7. Use of pallets is optional.

STATE OF CALIFORNIA
DEPARTMENT OF TRANSPORTATION

TEMPORARY CRASH CUSHION, SAND FILLED (UNIDIRECTIONAL)

NO SCALE

RSP T1A DATED JUNE 6, 2008 SUPERSEDES STANDARD PLAN T1A
DATED MAY 1, 2006 - PAGE 211 OF THE STANDARD PLANS BOOK DATED MAY 2006.

REVISED STANDARD PLAN RSP T1A

2006 REVISED STANDARD PLAN RSP T1A

5-15-08

DIST	COUNTY	ROUTE	POST MILES TOTAL PROJECT	SHEET NO.	TOTAL SHEETS
03	ED	193	23.4	42	52

Randell D. Hiatt
REGISTERED CIVIL ENGINEER

June 6, 2008
PLANS APPROVAL DATE

REGISTERED PROFESSIONAL ENGINEER — Randell D. Hiatt — No. C50200 — Exp. 6-30-09 — CIVIL — STATE OF CALIFORNIA

The State of California or its officers or agents shall not be responsible for the accuracy or completeness of electronic copies of this plan sheet.

To accompany plans dated 3-26-12

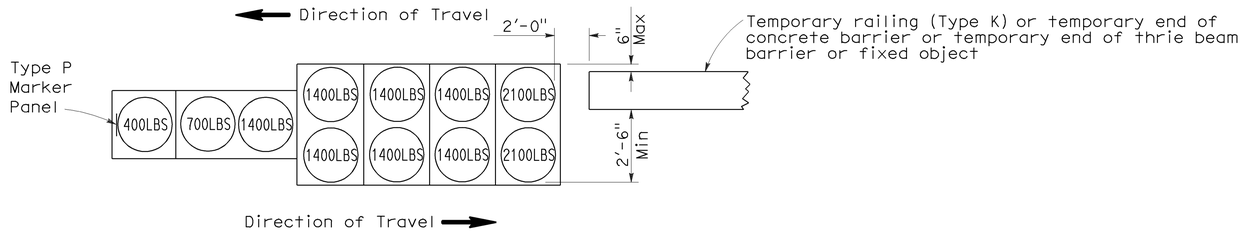

ARRAY 'TB11'

Approach speed less than 45 mph

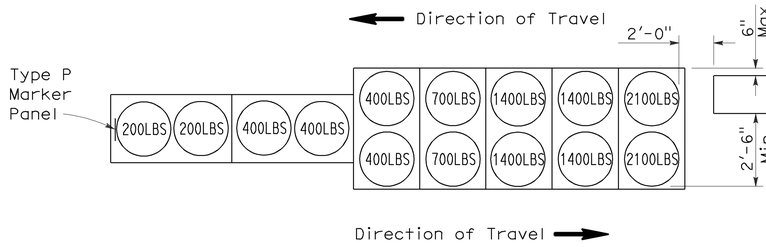

ARRAY 'TB14'

Approach speed 45 mph or more

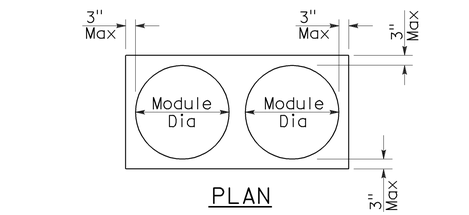

CRASH CUSHION PALLET DETAIL

See Note 7

NOTES:

1. (XXX) Indicates sand filled module location and weight of sand in pounds for each module. Module spacing is based on the greater diameter of the module.
2. All sand weights are nominal.
3. Temporary crash cushion arrays shall not encroach on the traveled way.
4. Place the Type P marker panel so that the bottom of the panel rests upon the pallet.
5. Refer to Standard Plan A73B for marker details.
6. Approach speeds indicated conform to NCHRP 350 Report criteria.
7. Use of pallets is optional.

STATE OF CALIFORNIA
DEPARTMENT OF TRANSPORTATION

TEMPORARY CRASH CUSHION, SAND FILLED (BIDIRECTIONAL)

NO SCALE

RSP T1B DATED JUNE 6, 2008 SUPERSEDES STANDARD PLAN T1B
DATED MAY 1, 2006 - PAGE 212 OF THE STANDARD PLANS BOOK DATED MAY 2006.

REVISED STANDARD PLAN RSP T1B

2006 REVISED STANDARD PLAN RSP T1B

5-15-08

DIST	COUNTY	ROUTE	POST MILES TOTAL PROJECT	SHEET NO.	TOTAL SHEETS
03	ED	193	23.4	43	52

Randell D. Hiatt
REGISTERED CIVIL ENGINEER

June 6, 2008
PLANS APPROVAL DATE

REGISTERED PROFESSIONAL ENGINEER
Randell D. Hiatt
No. C50200
Exp. 6-30-09
CIVIL
STATE OF CALIFORNIA

The State of California or its officers or agents shall not be responsible for the accuracy or completeness of electronic copies of this plan sheet.

To accompany plans dated 3-26-12

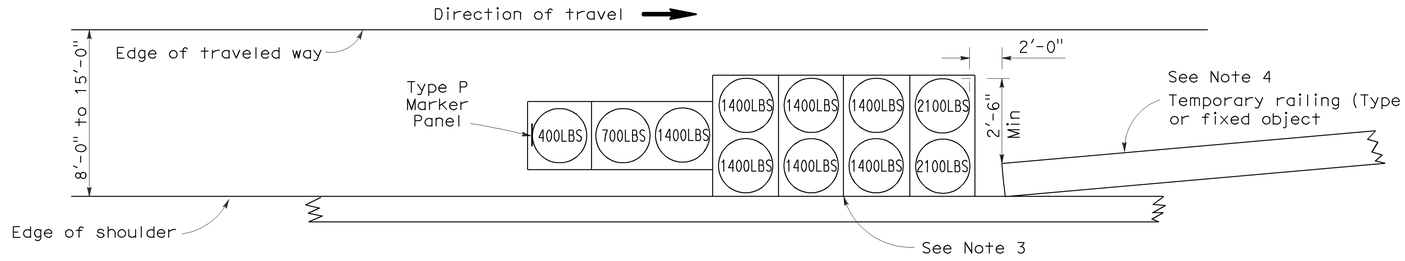

ARRAY 'TS11'

Approach speed less than 45 mph
See Note 9

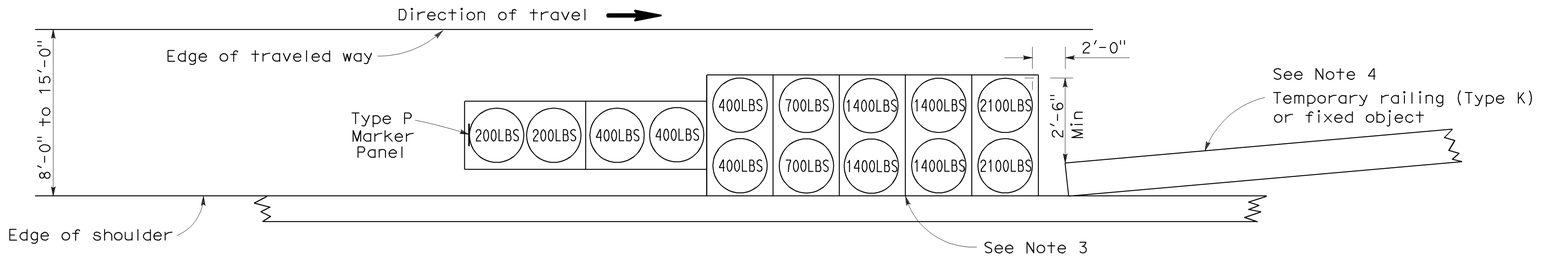

ARRAY 'TS14'

Approach speed 45 mph or more
See Note 9

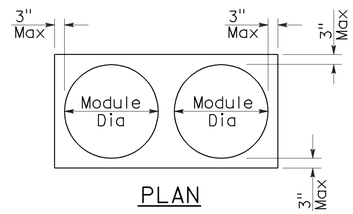

PLAN

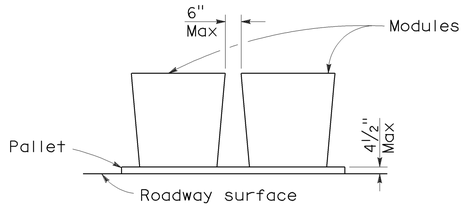

ELEVATION

CRASH CUSHION PALLET DETAIL

See Note 11

NOTES:

1. (XXX) Indicates sand filled module location and weight of sand in pounds for each module. Module spacing is based on the greater diameter of the module.
2. All sand weights are nominal.
3. The temporary crash cushion arrays shown on this plan shall be used only in locations where there will be traffic on one side of the temporary crash cushion array.
4. If the fixed object or approach end of the temporary railing is less than 15'-0" from the edge of traveled way, a temporary crash cushion is required in a construction or work zone.
5. Temporary crash cushion arrays shall not encroach on the traveled way.
6. Arrays for median shoulders shall conform to details shown on this plan for outside shoulders.
7. Place the Type P marker panel so that the bottom of the panel rests upon the pallet and faces traffic.
8. Refer to Standard Plan A73B for marker details.
9. For shoulder widths less than 8'-0", appropriate approved crash cushion protection, other than sand filled modules, shall be provided at fixed objects and at approach ends of temporary railing. The specific type of crash cushion shall be as shown on the project plans or as specified in the Special Provisions, or if not shown on the project plans or specified in the Special Provisions, shall be as approved by the Engineer.
10. Approach speeds indicated conform to NCHRP 350 Report criteria.
11. Use of pallets is optional.

STATE OF CALIFORNIA
DEPARTMENT OF TRANSPORTATION

TEMPORARY CRASH CUSHION, SAND FILLED (SHOULDER INSTALLATIONS)

NO SCALE

RSP T2 DATED JUNE 6, 2008 SUPERSEDES STANDARD PLAN T2
DATED MAY 1, 2006 - PAGE 213 OF THE STANDARD PLANS BOOK DATED MAY 2006.

REVISED STANDARD PLAN RSP T2

2006 REVISED STANDARD PLAN RSP T2

5-15-08

Dist	COUNTY	ROUTE	POST MILES TOTAL PROJECT	SHEET No.	TOTAL SHEETS
03	ED	193	23.4	44	52

Randell D. Hiatt
REGISTERED CIVIL ENGINEER

May 20, 2011
PLANS APPROVAL DATE

REGISTERED PROFESSIONAL ENGINEER
Randell D. Hiatt
No. C50200
Exp. 6-30-11
CIVIL
STATE OF CALIFORNIA

The State of California or its officers or agents shall not be responsible for the accuracy or completeness of electronic copies of this plan sheet.

To accompany plans dated 3-26-12

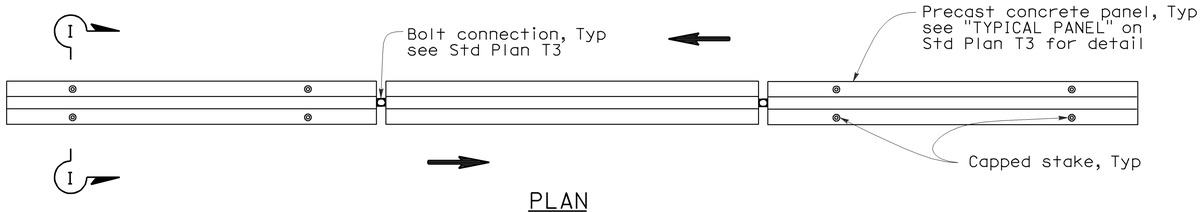

PLAN

RAILING STAKING CONFIGURATION FOR TWO-WAY TRAFFIC

See Note 1

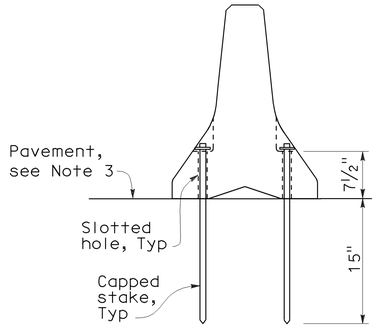

SECTION I-I

NOTES:

1. Where Type K Temporary Railing is placed as a temporary or long term barrier in two-way traffic on highways with less than 24" from the edge of traveled way, use four capped stakes per every other panel with end panels staked.
2. Where Type K Temporary Railing is placed 3" to 24" from the edge of an excavation on highways, use two capped stakes per panel along the traffic side.
3. Staked Type K Temporary Railing must be supported by at least 4" thick concrete, hot mix asphalt or existing asphalt concrete pavement.
4. The minimum yield strength for the washer must be 60,000 psi.
5. Direction of adjacent traffic indicated by ⟹.

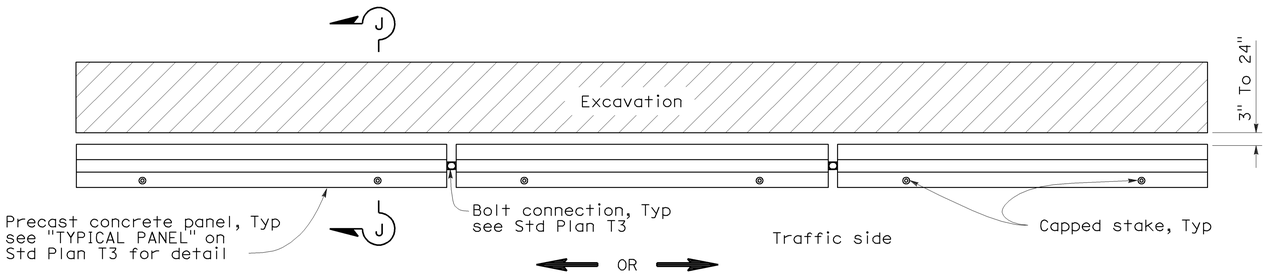

PLAN

RAILING STAKING CONFIGURATION ADJACENT TO AN EXCAVATION

See Note 2

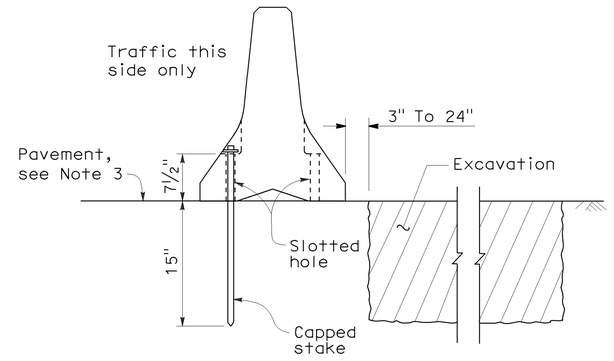

SECTION J-J

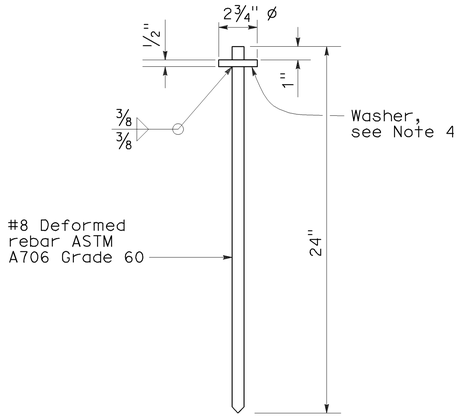

CAPPED STAKE DETAIL

STATE OF CALIFORNIA
DEPARTMENT OF TRANSPORTATION

TEMPORARY RAILING (TYPE K)

NO SCALE

NSP T3A DATED MAY 20, 2011 SUPPLEMENTS
THE STANDARD PLANS BOOK DATED MAY 2006.

NEW STANDARD PLAN NSP T3A

2006 NEW STANDARD PLAN NSP T3A

8-31-10

DIST	COUNTY	ROUTE	POST MILES TOTAL PROJECT	SHEET NO.	TOTAL SHEETS
03	ED	193	23.4	45	52

Robert B Schott
LICENSED LANDSCAPE ARCHITECT

August 15, 2008
PLANS Approval DATE

The State of California or its officers or agents shall not be responsible for the accuracy or completeness of electronic copies of this plan sheet.

LICENSED LANDSCAPE ARCHITECT
Robert B. Schott 3825
Signature Date
11-04-08
Renewal Date
08-11-08
Date
STATE OF CALIFORNIA

To accompany plans dated 3-26-12

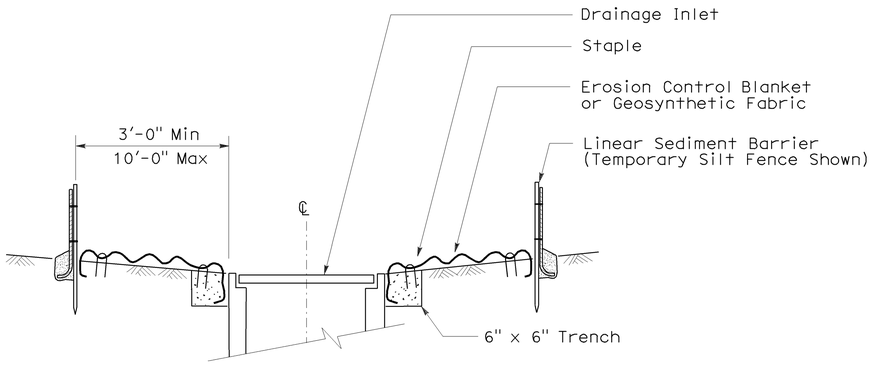

SECTION A-A

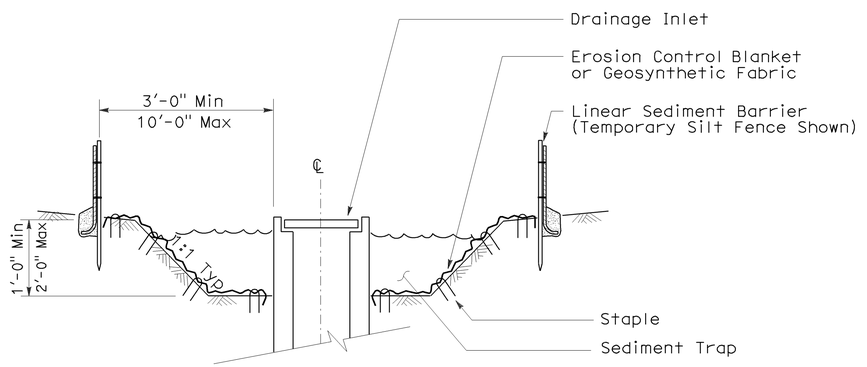

SECTION B-B

NOTES:

1. See Standard Plan T51 for Temporary Silt Fence.
2. Dimensions may vary to fit field conditions.

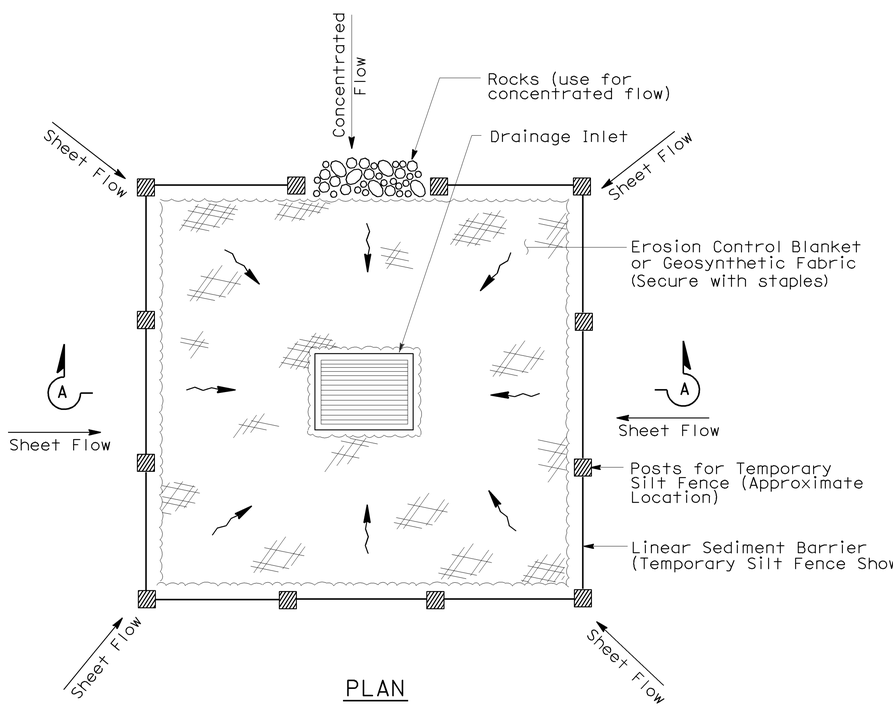

PLAN

TEMPORARY DRAINAGE INLET PROTECTION (TYPE 1)

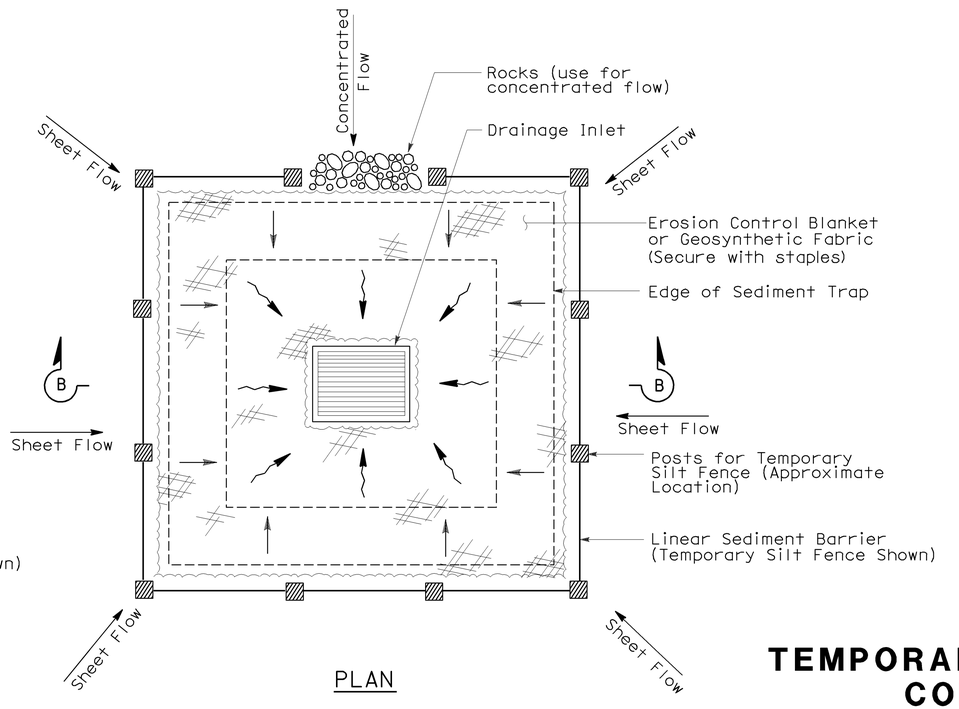

PLAN

TEMPORARY DRAINAGE INLET PROTECTION (TYPE 2) (EXCAVATED SEDIMENT TRAP)

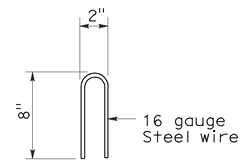

STAPLE DETAIL

STATE OF CALIFORNIA
DEPARTMENT OF TRANSPORTATION

TEMPORARY WATER POLLUTION CONTROL DETAILS (TEMPORARY DRAINAGE INLET PROTECTION)

NO SCALE

Nsp t61 dated august 15, 2008 supplements the standard plans book dated may 2006.

NEW STANDARD PLAN NSP T61

2006 NEW STANDARD PLAN NSP T61

7-11-08

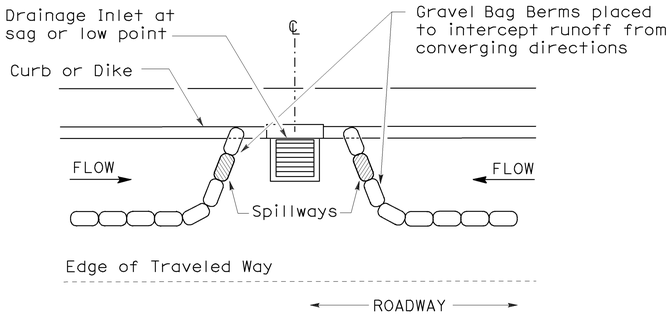

PLAN

CONFIGURATION FOR SAG POINT INLET (GRAVEL BAG BERM)

GRAVEL BAG BERM (TYPE 3A) SPACING TABLE

SLOPE OF ROADWAY (PERCENT)	1 to 3.9	4 to 5.9	6 to 7.9	8 to 10	10+
INTERVAL BETWEEN BERM	100′	75′	50′	25′	12′

For slope of less than 1%, install barriers only if erosion/sediment is prevalent

DIST	COUNTY	ROUTE	POST MILES TOTAL PROJECT	SHEET NO.	TOTAL SHEETS
03	ED	193	23.4	46	52

Robert B Schott
LICENSED LANDSCAPE ARCHITECT

August 15, 2008
PLANS APPROVAL DATE

LICENSED LANDSCAPE ARCHITECT — Robert B. Schott 3825 — Signed 11-04-08 — Renewal Date 08-11-08 — Date — STATE OF CALIFORNIA

The State of California or its officers or agents shall not be responsible for the accuracy or completeness of electronic copies of this plan sheet.

To accompany plans dated 3-26-12

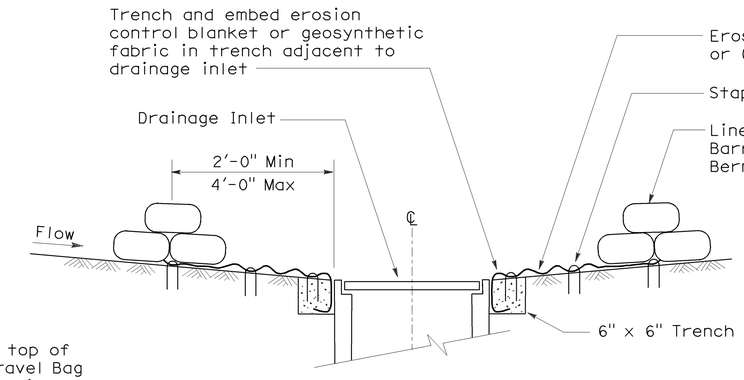

SECTION A-A

NOTES:

1. Place safety cones adjacent to drainage inlet protection.
2. Dimensions may vary to fit field conditions.
3. Install a minimum of 3 gravel bag berms upstream of each drainage inlet to be protected.
4. Position erosion control blanket or geosynthetic fabric at edge of concrete apron and secure in trench.
5. Erosion control blanket or geosynthetic fabric is not required if the area adjacent to the drainage inlet is vegetated or paved.

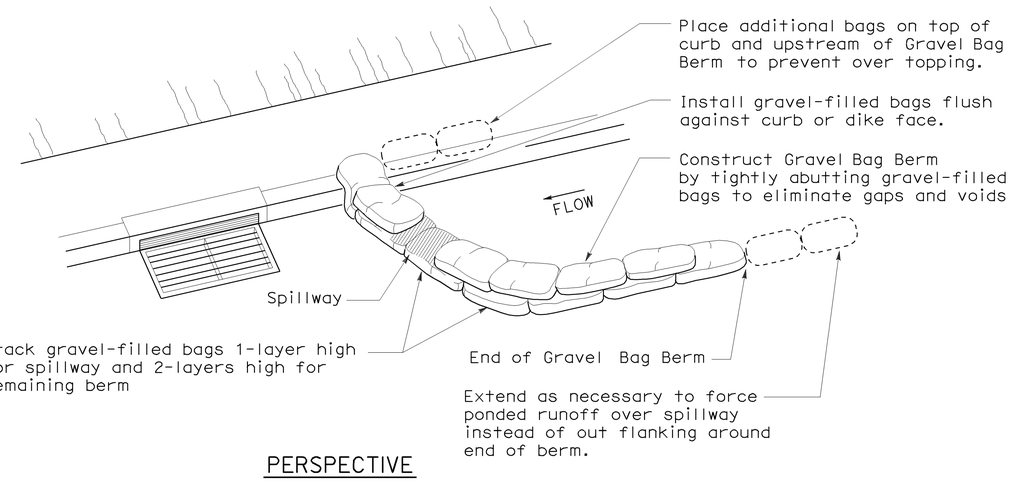

PERSPECTIVE

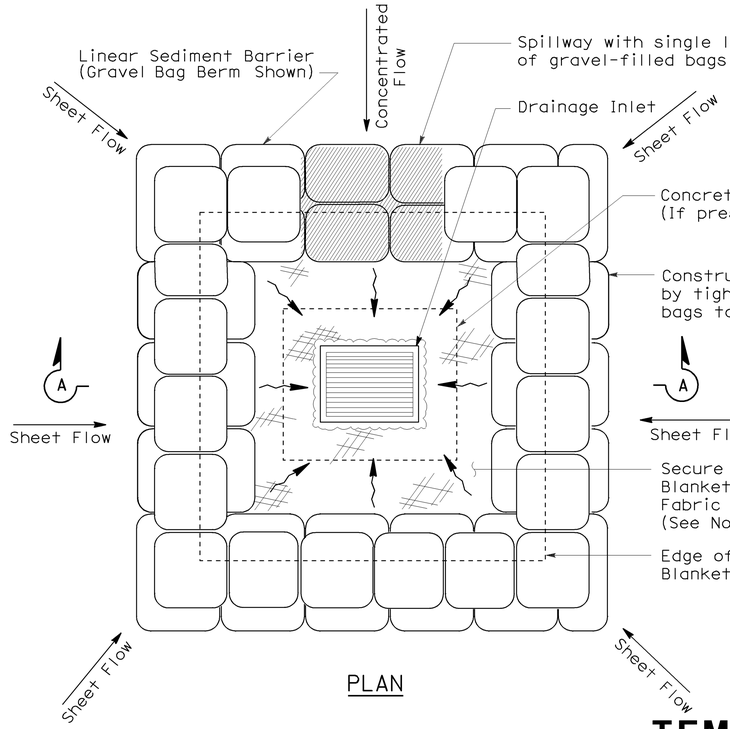

PLAN

TEMPORARY DRAINAGE INLET PROTECTION (TYPE 3B)

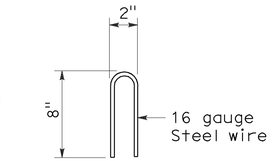

STAPLE DETAIL

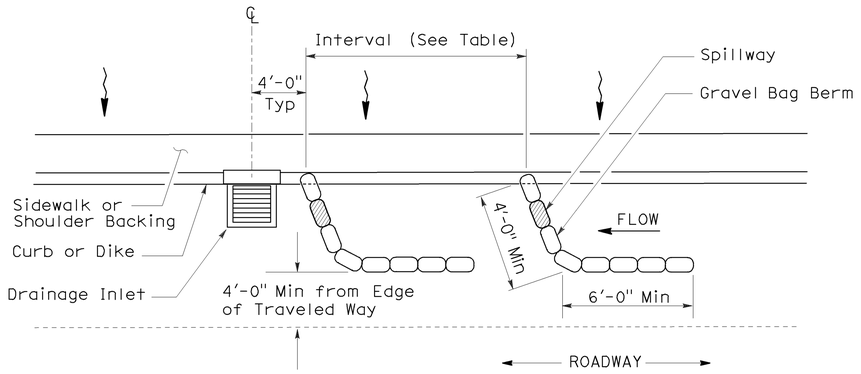

PLAN

TEMPORARY DRAINAGE INLET PROTECTION (TYPE 3A) (GRAVEL BAG BERM)

STATE OF CALIFORNIA
DEPARTMENT OF TRANSPORTATION

TEMPORARY WATER POLLUTION CONTROL DETAILS (TEMPORARY DRAINAGE INLET PROTECTION)

NO SCALE

NSP T62 DATED AUGUST 15, 2008 SUPPLEMENTS THE STANDARD PLANS BOOK DATED MAY 2006.

NEW STANDARD PLAN NSP T62

2006 NEW STANDARD PLAN NSP T62

7-11-08

DIST	COUNTY	ROUTE	POST MILES TOTAL PROJECT	SHEET NO.	TOTAL SHEETS
03	ED	193	23.4	47	52

Robert B Schott
LICENSED LANDSCAPE ARCHITECT

August 15, 2008
PLANS APPROVAL DATE

LICENSED LANDSCAPE ARCHITECT
Robert B. Schott 3695
Robert B Schott
Signature
11-04-08
Renewal Date
08-11-08
Date
STATE OF CALIFORNIA

The State of California or its officers or agents shall not be responsible for the accuracy or completeness of electronic copies of this plan sheet.

To accompany plans dated 3-26-12

FLEXIBLE SEDIMENT BARRIER SPACING TABLE

SLOPE OF ROADWAY (PERCENT)	0 to 0.9	1 to 1.9	2 to 2.9	3 to 4	5+
INTERVAL BETWEEN BARRIERS	50′	35′	30′	25′	20′
ANGLE FROM FACE OF CURB	70°	70°	70°	45°	45°
SUGGESTED BARRIER LENGTH	6′	6′	6′	6′	6′

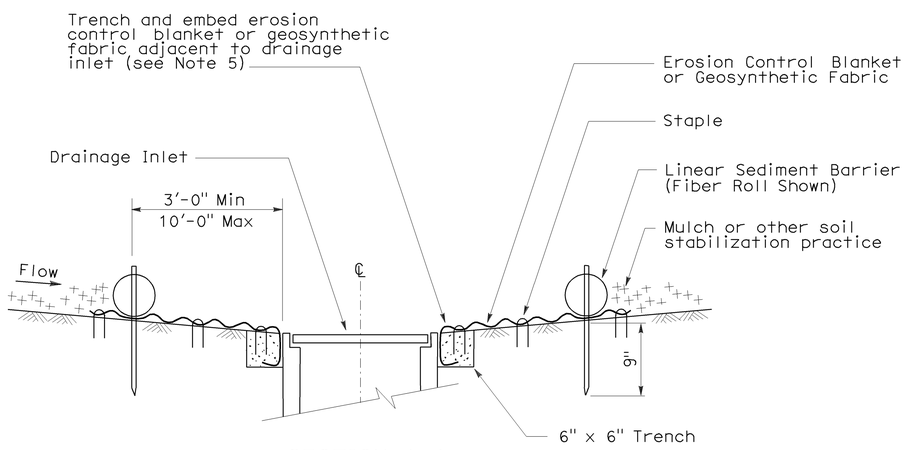

SECTION A-A

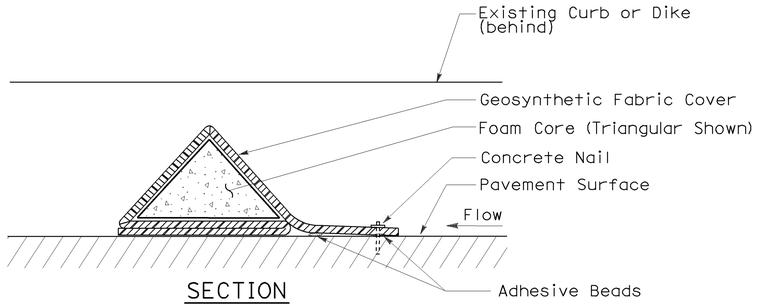

SECTION

FLEXIBLE SEDIMENT BARRIER DETAIL
(FOAM BARRIER SHOWN)

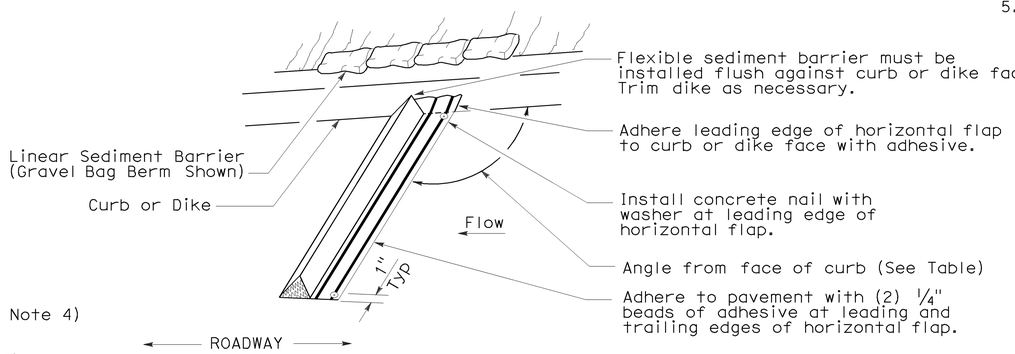

PERSPECTIVE

NOTES:

1. See Standard Plan T51 for Temporary Silt Fence.
2. Dimensions may vary to fit field conditions.
3. Install a minimum of 3 flexible sediment barriers upstream of each drainage inlet to be protected.
4. Position erosion control blanket or geosynthetic fabric at edge of concrete apron and secure in trench.
5. Erosion control blanket or geosynthetic fabric is not required if the area adjacent to the drainage inlet is vegetated.

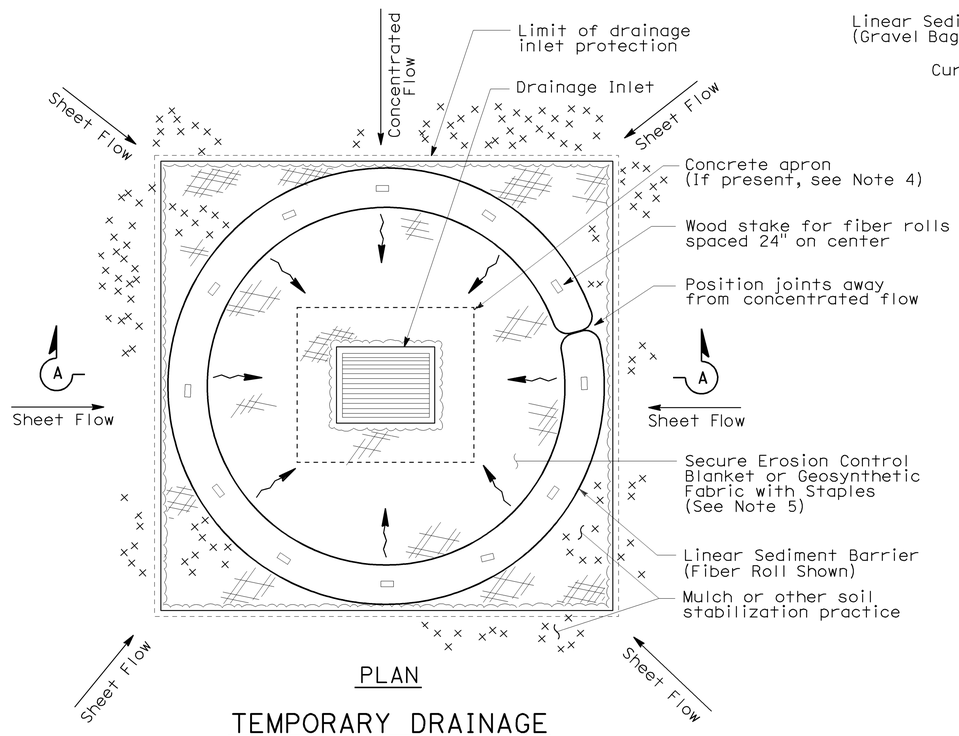

PLAN

TEMPORARY DRAINAGE
INLET PROTECTION (TYPE 4A)

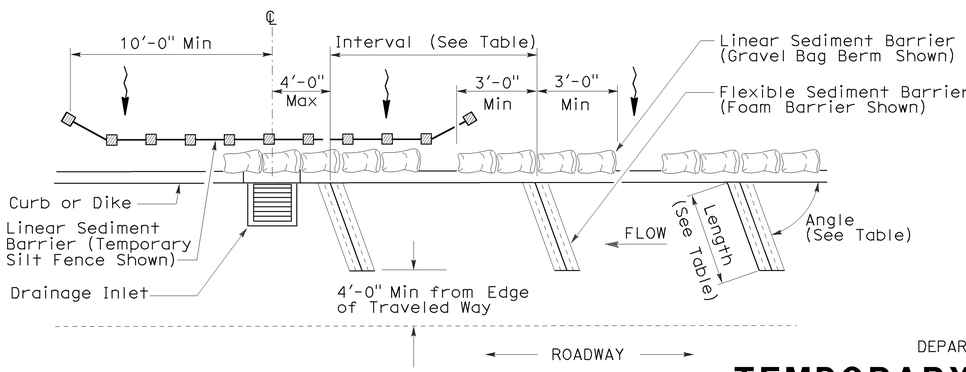

PLAN

TEMPORARY DRAINAGE
INLET PROTECTION (TYPE 4B)
FLEXIBLE SEDIMENT BARRIER

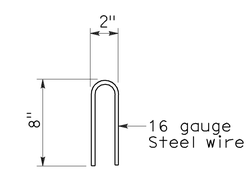

STAPLE DETAIL

STATE OF CALIFORNIA
DEPARTMENT OF TRANSPORTATION

TEMPORARY WATER POLLUTION CONTROL DETAILS (TEMPORARY DRAINAGE INLET PROTECTION)

NO SCALE

NSP T63 DATED AUGUST 15, 2008 SUPPLEMENTS
THE STANDARD PLANS BOOK DATED MAY 2006.

NEW STANDARD PLAN NSP T63

2006 NEW STANDARD PLAN NSP T63

7-11-08

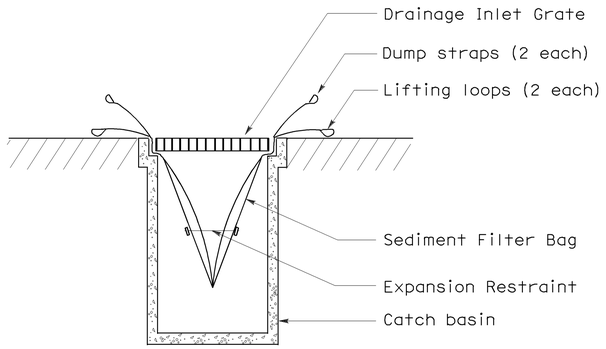

SECTION B-B

SEDIMENT FILTER BAG DETAIL

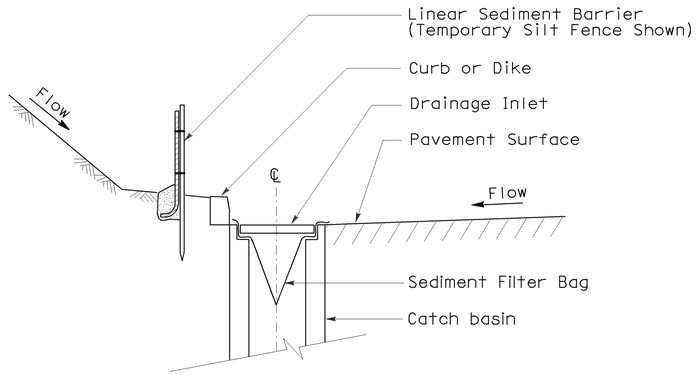

SECTION A-A

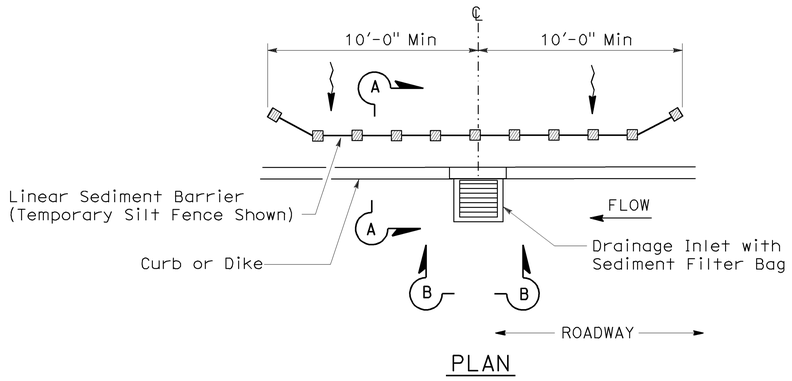

PLAN

TEMPORARY DRAINAGE INLET PROTECTION (TYPE 5) (SEDIMENT FILTER BAG)

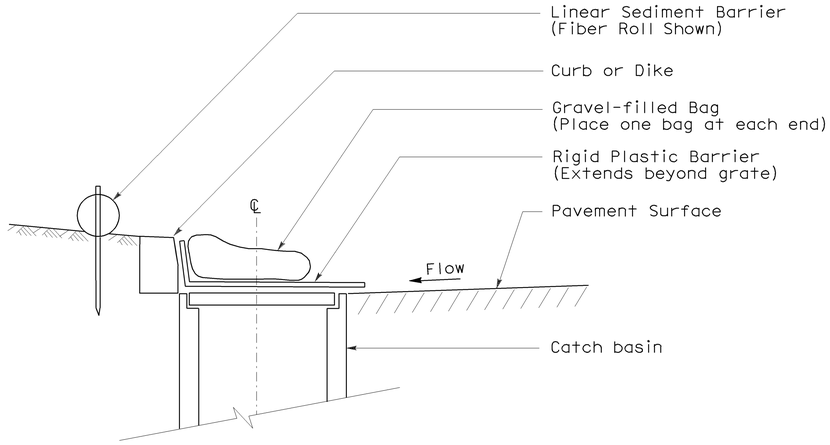

SECTION

TEMPORARY DRAINAGE INLET PROTECTION (TYPE 6A) (CATCH BASIN WITH GRATE)

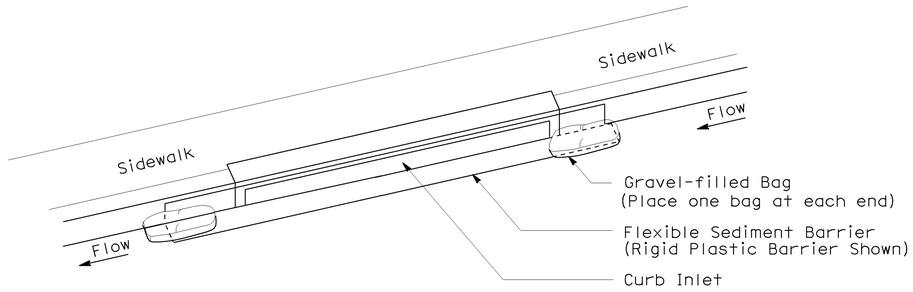

PERSPECTIVE

TEMPORARY DRAINAGE INLET PROTECTION (TYPE 6B) (CURB INLET WITHOUT GRATE)

DIST	COUNTY	ROUTE	POST MILES TOTAL PROJECT	SHEET NO.	TOTAL SHEETS
03	ED	193	23.4	48	52

Robert B Schott
LICENSED LANDSCAPE ARCHITECT

August 15, 2008
PLANS APPROVAL DATE

LICENSED LANDSCAPE ARCHITECT
Robert B. Schott 3825
Signature Date
11-04-08
Renewal Date
08-11-08
Date
STATE OF CALIFORNIA

The State of California or its officers or agents shall not be responsible for the accuracy or completeness of electronic copies of this plan sheet.

To accompany plans dated 3-26-12

NOTES:

1. See Standard Plan T51 for Temporary Silt Fence.
2. Dimensions may vary to fit field conditions.

STATE OF CALIFORNIA
DEPARTMENT OF TRANSPORTATION

TEMPORARY WATER POLLUTION CONTROL DETAILS (TEMPORARY DRAINAGE INLET PROTECTION)

NO SCALE

NSP T64 DATED AUGUST 15, 2008 SUPPLEMENTS THE STANDARD PLANS BOOK DATED MAY 2006.

NEW STANDARD PLAN NSP T64

2006 NEW STANDARD PLAN NSP T64

7-11-08

DIST	COUNTY	ROUTE	POST MILES TOTAL PROJECT	SHEET NO.	TOTAL SHEETS
03	ED	193	23.4	49	52

Jeffrey G. McRae
REGISTERED ELECTRICAL ENGINEER

October 5, 2007
PLANS APPROVAL DATE

REGISTERED PROFESSIONAL ENGINEER
Jeffery G. McRae
No. E14512
Exp. 6-30-08
ELECTRICAL
STATE OF CALIFORNIA

The State of California or its officers or agents shall not be responsible for the accuracy or completeness of electronic copies of this plan sheet.

To accompany plans dated 3-26-12

ELECTROLIERS

STANDARD TYPES
15, 15D
15 STRUCTURE
21, 21D STRUCTURE
30
31
32
35
36-20A

High mast light pole

Double Arm lighting standard

Existing electrolier

Electrolier foundation (Future installation)

NOTES:

1. Luminaires shall be 310 W HPS when installed on Type 21, 21D, 30, 31, 32, 35 and 36-20A Standards, unless otherwise specified. Luminaires shall be 200 W HPS when installed on other type standards or poles, unless otherwise specified.
2. Luminaires shall be the cutoff type, ANSI Type III medium cutoff lighting distribution, unless otherwise specified.
3. Variations noted adjacent to symbol on project plans.

Electrolier (see project notes or project plans)

Luminaire on wood pole

STANDARD NOTES:

- AB — Abandon. If applied to conduit, remove conductors.
- BC — Install pull box in existing conduit run.
- BP — Pedestrian barricade, type as indicated on plan.
- CB — Install conduit into existing pull box.
- CC — Connect new and existing conduit. Remove existing conductors and install conductors as indicated.
- CF — Conduit to remain for future use. Remove conductors. Install pull wire or rope.
- DH — Detector handhole.
- FA — Foundation to be abandoned.
- IS — Install sign on signal mast arm.
- NS — No slip base on standard.
- PEC — Photoelectric control.
- PEU — Photoelectric unit.
- RC — Equipment or material to be removed and become the property of the Contractor.
- RE — Remove electrolier, fuses and ballast. Tape ends of conductors.
- RL — Relocate equipment.
- RR — Remove and reuse equipment.
- RS — Remove and salvage equipment.
- SC — Splice new to existing conductors.
- SD — Service disconnect.
- SF — Standard to remain for future use. Remove luminaire, pole conductors, fuses and ballast.
- TSP — Telephone service point.

ABBREVIATIONS AND EQUIPMENT DESIGNATIONS

PROPOSED	EXISTING	
BBS	bbs	Battery backup system
BC	bc	Bolt circle
C	C	Conduit
CCTV	cctv	Closed circuit television
CKT	ckt	Circuit
CMS	cms	Changeable message sign
DLC	dlc	Loop detector lead-in cable
EMS	ems	Extinguishable message sign
EVC	evc	Emergency vehicle cable
EVD	evd	Emergency vehicle detector
FB	fb	Flashing beacon
FBCA	fbca	Flashing beacon control assembly
FBS	fbs	Flashing beacon with slip base
FO	fo	Fiber optic
G	G	Ground (Equipment Grounding Conductor)
GFCI	GFCI	Ground fault circuit interrupt
HAR	har	Highway advisory radio
HEX	hex	Hexagonal
HPS	hps	High pressure sodium
IISNS	iisns	Internally illuminated street name sign
ISL	isl	Induction sign lighting
LED	led	Light emitting diode
LMA	lma	Luminaire mast arm
LPS	lps	Low pressure sodium
LTG	ltg	Lighting
LUM	lum	Luminaire
MAT	mat	Mast arm mounting vehicle signal faces, top attachment
MAS	mas	Mast arm mounting vehicle signal faces, side attachment
MAS-4A	mas-4A	Mast arm mounting vehicle signal faces,
MAS-4B	mas-4B	side attachment - 4 signal section
MAS-4C	mas-4C	
MAS-5A	mas-5A	Mast arm mounting vehicle signal faces,
MAS-5B	mas-5B	side attachment - 5 signal section
MC	mc	Mercury contactor
M/M	m/m	Multiple to multiple transformer
MT	mt	Conduit with pull wire or rope only
MTG	mtg	Mounting
	mv	Mercury vapor lighting fixture
N	N	Neutral (Grounded Conductor)
NC	NC	Normally closed
NO	NO	Normally open
PB	pb	Pull box
PEC	pec	Photoelectric control (Type I, II, III, IV or V as shown)
PED	ped	Pedestrian
PEU	peu	Photoelectric unit
PPB	ppb	Pedestrian push button
RL		Relocated equipment
RM	rm	Ramp metering
SB	sb	Slip base
SIC	sic	Signal interconnect cable
SIG	sig	Signal
SMA	sma	Signal mast arm
SNS	sns	Street name sign
SP	sp	Service point
TDC	tdc	Telephone demarcation cabinet
TMS	tms	Traffic monitoring station
TOS	tos	Traffic Operations System
VEH	veh	Vehicle
XFMR	xfmr	Transformer
COMM	comm	Communication
RWIS	rwis	Roadway weather information system

SOFFIT AND WALL MOUNTED LUMINAIRES

- Pendant, 70 W HPS unless otherwise specified.
- Flush, 70 W HPS unless otherwise specified.
- Wall surface, 70 W HPS unless otherwise specified.
- Existing soffit or wall luminaire to remain unmodified.
- (M) Existing soffit or wall luminaire to be modified as specified.

NOTE:

Arrow indicates "street side" of luminaire.

STATE OF CALIFORNIA
DEPARTMENT OF TRANSPORTATION

ELECTRICAL SYSTEMS (SYMBOLS AND ABBREVIATIONS)

NO SCALE

RSP ES-1A DATED OCTOBER 5, 2007 SUPERSEDES STANDARD PLAN ES-1A
DATED MAY 1, 2006 - PAGE 400 OF THE STANDARD PLANS BOOK DATED MAY 2006.

REVISED STANDARD PLAN RSP ES-1A

2006 REVISED STANDARD PLAN RSP ES-1A

7-10-07

DIST	COUNTY	ROUTE	POST MILES TOTAL PROJECT	SHEET NO.	TOTAL SHEETS
03	ED	193	23.4	50	52

REGISTERED ELECTRICAL ENGINEER

Jeffery G. McRae
No. E14512
Exp. 6-30-08
ELECTRICAL
REGISTERED PROFESSIONAL ENGINEER
STATE OF CALIFORNIA

October 5, 2007
PLANS APPROVAL DATE

The State of California or its officers or agents shall not be responsible for the accuracy or completeness of electronic copies of this plan sheet.

To accompany plans dated 3-26-12

CONDUIT

PROPOSED	EXISTING	
		Lighting Conduit, unless otherwise indicated or noted
		Traffic signal conduit
C	c	Communication conduit
T	t	Telephone conduit
F	f	Fire alarm conduit
FO	fo	Fiber optic conduit
		Conduit termination (RSP ES-9A C)
R	r	Conduit riser in/on structure or service pole

SERVICE EQUIPMENT

PROPOSED	EXISTING	
OH	oh	Overhead lines
U	U	Wood pole "U" indicates utility owned
		Pole guy with anchor
		Utility transformer - ground mounted
III		Service equipment enclosure type
		Service equipment enclosure door indicates front of enclosure
T	t	Telephone demarcation cabinet

POLE-MOUNTED SERVICE DESIGNATION

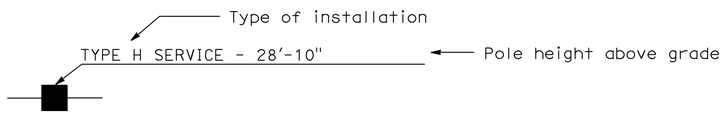

ILLUMINATED OVERHEAD SIGN

PROPOSED	EXISTING	
		Overhead sign - Single post
		Overhead sign - Two post
		Overhead sign - Mounted on structure
		Overhead sign with electrolier

SIGNAL EQUIPMENT

PROPOSED	EXISTING	
		Pedestrian signal face
		Pedestrian push button post
		Pedestrian barricade
		Vehicle signal face (with backplate, 3-Section: red, yellow and green)
		Vehicle signal face with angle visors
PV	PV	Modifications of basic symbols: "L" Indicates all non-arrow sections louvered "LG" Indicates louvered green section only "PV" indicates 12" programmed visibility sections "8" indicates all 8" sections (only when specified)
		Type 15TS and Vehicle signal face
		Vehicle signal face with red, yellow and green left arrow sections
		Vehicle signal face with red and yellow sections and up green arrow
		Vehicle signal face (5 Section) with red, yellow and green sections and yellow and green right arrows
		Type 1 Standard and attached vehicle signal faces
		Standard with signal mast arm only and attached vehicle signal faces and internally illuminated street name sign
		Type 33 Standard, Left-turn vehicle signal face and sign
		Standard with luminaire and signal mast arms and attached vehicle signal faces
		Cantilever flashing beacon Type 9 Frame, with a sign unless otherwise specified or indicated
		Type 15-FBS Standard with two vehicle signal face sections with lens, backplate and visor with a sign
R	Y	Flashing beacon. One vehicle signal face section with lens, backplate and visor. "R" indicates red indication, "Y" indicates yellow indication
		Controller assembly. Door indicates front of cabinet

SIGNAL EQUIPMENT Cont

PROPOSED	EXISTING	
		Guard post
		Type 1 Standard with "Meter On" sign
		Emergency Vehicle detector

NOTES:

1. All signal sections shall be 12" unless shown otherwise.
2. Signal heads shall be provided with backplates unless shown otherwise.
3. Signal indication shall be LED.

STATE OF CALIFORNIA
DEPARTMENT OF TRANSPORTATION

ELECTRICAL SYSTEMS (SYMBOLS AND ABBREVIATIONS)

NO SCALE

RSP ES-1B DATED OCTOBER 5, 2007 SUPERCEDES STANDARD PLAN ES-1B
DATED MAY 1, 2006 - PAGE 401 OF THE STANDARD PLANS BOOK DATED MAY 2006.

REVISED STANDARD PLAN RSP ES-1B

2006 REVISED STANDARD PLAN RSP ES-1B

7-10-07

DIST	COUNTY	ROUTE	POST MILES TOTAL PROJECT	SHEET NO.	TOTAL SHEETS
03	ED	193	23.4	51	52

Jeffery G. McRae
REGISTERED ELECTRICAL ENGINEER

October 5, 2007
PLANS APPROVAL DATE

REGISTERED PROFESSIONAL ENGINEER
Jeffery G. McRae
No. E14512
Exp. 6-30-08
ELECTRICAL
STATE OF CALIFORNIA

The State of California or its officers or agents shall not be responsible for the accuracy or completeness of electronic copies of this plan sheet.

To accompany plans dated 3-26-12

EQUIPMENT IDENTIFICATION

ILLUMINATED SIGN IDENTIFICATION NUMBER:

Sign No. 12345 — Sign number - Place on post or structure

10 ISL SCI 1.0
- Transformer rating (kVA)
- Lighting control type
- Number and type of fixtures

Do NOT place on standard or structure

ELECTROLIER OR EQUIPMENT IDENTIFICATION NUMBER:

12345 - 15'-0"
- Mast arm length, if shown. Do not place on standard or structure.
- Equipment number - Place on standard or structure. Existing equipment numbers are shown in parenthesis

CONDUIT AND CONDUCTOR IDENTIFICATION:

1½"C, 2#10, 15#14, 2 DLC
- Number and size of conductors and cables
- Size of conduit in inches

Ø1, Ø2, Ø2P, etc. — Traffic phase identification for signal faces, detectors and phase diagrams

1 2 3 — Project note numbers

A B C — Equipment description, installation or item numbers

1 2 3 — Conduit run numbers

SIGNAL AND LIGHTING STANDARD (TYPICAL DESIGNATION):

19A - 3 - 100
- Wind velocity = 100 mph
- Case 3 arm loading
- Standard type
- Standard Plan sheet number
- Detail number or letter

MISCELLANEOUS EQUIPMENT

PROPOSED	EXISTING	
CMS	cms	Changeable message sign
		Closed circuit television camera
		Highway advisory radio pole and antenna
EMS	ems	Extinguishable message sign
M V	m v	Detection device M = Microwave sensor V = Video image sensor

WIRING DIAGRAM LEGEND

P	Pole
CB	Circuit breaker
A	Ampere
V	Volt
M	Metered
UM	Unmetered
NB	Neutral bus
GB	Ground bus
G	Equipment grounding conductor
N	Grounded conductor (Neutral)

- External conductor
- Conductor or bus
- Tie point
- Contactor coil
- Contactor, Contact NO
- Terminal blocks
- Contactor, Contact NC
- Enclosure bond
- Grounding electrode
- Circuit breaker
- Receptacle

PULL BOXES

PROPOSED	EXISTING	
		Pull box-No. 5 unless otherwise indicated or noted.
3	9A(21)	Pull box-Additional designations or descriptions

3 = No. 3½ pull box
5 = No. 5 pull box
6 = No. 6 pull box
7 = No. 7 (Ceiling pull box)
8 = No. 8 (Pendant soffit pull box)
9 = No. 9 pull box
9A = No. 9A pull box

(C) = Communications pull box
(E) = Pull box with extension
(S) = Sprinkler control pull box
(21) = Anchor bolts and conduit for future installation of Type 21 Standard
(T) = Traffic pull box

VEHICLE DETECTORS

5 J 9 U
- Vehicle detector designation
- U = Upper, L = Lower
- Slot number in input file
- Input file (I or J)
- Phase

PROPOSED	EXISTING	
		Type A detector loop. Outline of sawcut shown.
		Type B detector loop. Outline of sawcut shown.
		Type C detector loop. Outline of sawcut shown.
		Type D detector loop. Outline of sawcut shown.
		Type E detector loop. Outline of sawcut shown.
		Type Q detector loop. Outline of sawcut shown.
		Magnetic detector
DH	dh	Detector handhole
		Microwave or video detection zone

STATE OF CALIFORNIA
DEPARTMENT OF TRANSPORTATION

ELECTRICAL SYSTEMS (SYMBOLS AND ABBREVIATIONS)

NO SCALE

RSP ES-1C DATED OCTOBER 5, 2007 SUPERCEDES STANDARD PLAN ES-1C DATED MAY 1, 2006 - PAGE 402 OF THE STANDARD PLANS BOOK DATED MAY 2006.

REVISED STANDARD PLAN RSP ES-1C

2006 REVISED STANDARD PLAN RSP ES-1C

7-10-07

DIST	COUNTY	ROUTE	POST MILES TOTAL PROJECT	SHEET NO.	TOTAL SHEETS
03	ED	193	23.4	52	52

Jeffery G. McRae
REGISTERED ELECTRICAL ENGINEER

Jeffery G. McRae
No. E14512
Exp. 6-30-08
ELECTRICAL
REGISTERED PROFESSIONAL ENGINEER
STATE OF CALIFORNIA

October 5, 2007
PLANS APPROVAL DATE

The State of California or its officers or agents shall not be responsible for the accuracy or completeness of electronic copies of this plan sheet.

To accompany plans dated 3-26-12

LOOP INSTALLATION PROCEDURE

1. Loops shall be centered in lanes.
2. Saw slots in pavement for loop conductors as shown in details.
3. Distance between side of loop and a lead-in saw cut from adjacent detectors shall be 2'-0" minimum. Distance between lead-in saw cuts shall be 6" minimum.
4. Bottom of saw slot shall be smooth with no sharp edges.
5. Slots shall be washed until clean, blown out and thoroughly dried before installing loop conductors.
6. Adjacent loops on the same sensor unit channel shall be wound in opposite directions.
7. Identify and tag loop circuit pairs in the pull box with loop number, start (S) and finish (F) of conductor. Identify and tag lead-in-cable with sensor number and phase.
8. Install loop conductor in slot using a 3/16" to 1/4" thick wood paddle. Hold loop conductors with wood paddles (at the bottom of the sawed slot) during sealant placement.
9. No more than 2 twisted pairs shall be installed in one sawed slot.
10. Allow additional 5'-0" of slack length of conductor for the lead-in run to pull box.
11. The additional length of each conductor for each loop shall be twisted together into a pair (6 turns per 3'-4" minimum) before being placed in the slot and conduit leading to pull box.
12. Test each loop circuit for continuity, circuit resistance and insulation resistance at the pull box before filling slots.
13. Fill slots as shown in details.
14. Splice loop conductors to lead-in-cable. Splices shall be soldered.
15. End of lead-in-cable and Type 2 loop conductor shall be waterproofed prior to installing in conduit to prevent moisture from entering the cable.
16. Lead-in-cable shall not be spliced between the pull box and the controller cabinet terminals.
17. Test each loop circuit for continuity, circuit resistance and insulation resistance at the controller cabinet location.
18. Where loop conductors are not to be spliced to a lead-in-cable, the ends of the conductors shall be taped and waterproofed with electrical insulating coating.

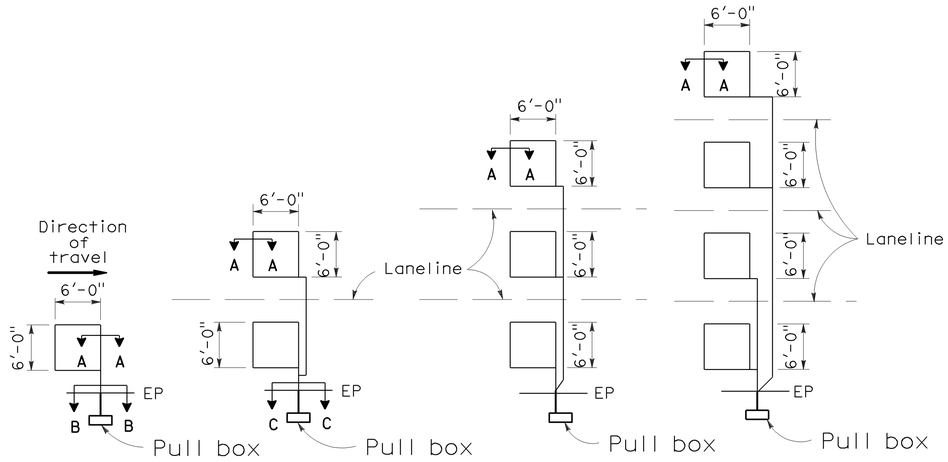

TYPE 1A INSTALLATION | TYPE 2A INSTALLATION | TYPE 3A INSTALLATION | TYPE 4A INSTALLATION

SAWCUT DETAILS

(Type A loop detector configurations illustrated)

1. 1A thru 4A = 1 Type A loop configuration in each lane.
2. 1B thru 4B = 1 Type B loop configuration in each lane.
3. 1C = 1 Type C loop configuration entering lanes as required.
4. 1D thru 4D = 1 Type D loop configuration in each lane.
5. 1E thru 4E = 1 Type E loop configuration in each lane.
6. 1Q thru 4Q = 1 Type Q loop configuration in each lane. (Use Type A, B, C, D, E or Q loop detector configurations only when specified or shown on plans)

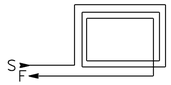

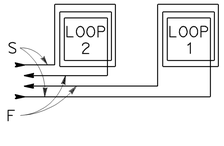

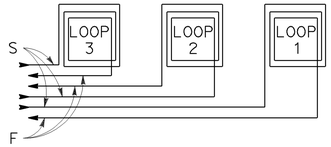

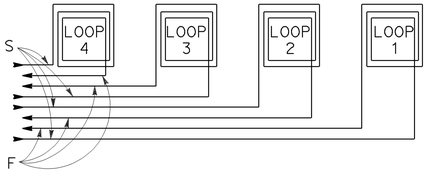

WINDING DETAILS

See Notes 6 and 7

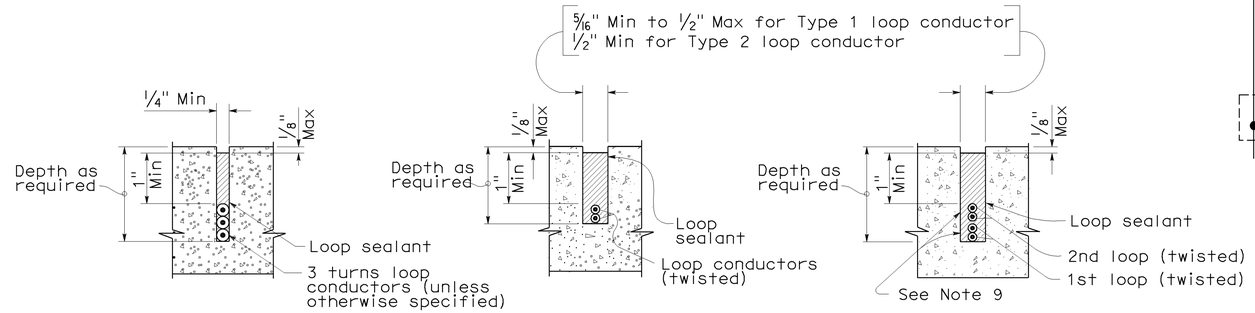

SECTION A-A | SECTION B-B | SECTION C-C

SLOT DETAILS - TYPE 1 AND TYPE 2 LOOP CONDUCTOR

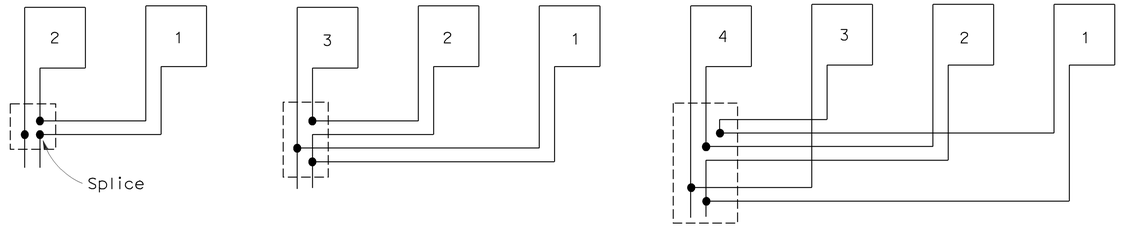

TYPICAL LOOP CONNECTIONS

(Dashed lines represent the pull box)

STATE OF CALIFORNIA
DEPARTMENT OF TRANSPORTATION

ELECTRICAL SYSTEMS (DETECTORS)

NO SCALE

RSP ES-5A DATED OCTOBER 5, 2007 SUPERCEDES STANDARD PLAN ES-5A
DATED MAY 1, 2006 - PAGE 423 OF THE STANDARD PLANS BOOK DATED MAY 2006.

REVISED STANDARD PLAN RSP ES-5A

2006 REVISED STANDARD PLAN RSP ES-5A

8-17-07