Dist	COUNTY	ROUTE	POST MILES TOTAL PROJECT	SHEET No.	TOTAL SHEETS
03	Yol	80	0.2/5.7	1	28

ACHSIM-0802(358)E

STATE OF CALIFORNIA
DEPARTMENT OF TRANSPORTATION

PROJECT PLANS FOR CONSTRUCTION ON
STATE HIGHWAY
IN YOLO COUNTY
IN AND NEAR DAVIS
FROM RICHARDS BOULEVARD OVERCROSSING
TO 0.1 MILE WEST OF YOLO CAUSEWAY (WEST)

TO BE SUPPLEMENTED BY STANDARD PLANS DATED MAY 2006

INDEX OF PLANS

SHEET No.	DESCRIPTION
1	TITLE AND LOCATION MAP
2	TYPICAL CROSS SECTIONS
3	CONSTRUCTION AREA SIGNS
4-7	STAGE CONSTRUCTION AND TRAFFIC HANDLING DETAILS AND QUANTITIES
8	PAVEMENT DELINEATION QUANTITIES
9	SUMMARY OF QUANTITIES
10	ELECTRICAL PLANS
11-28	REVISED AND NEW STANDARD PLANS

THE STANDARD PLANS LIST APPLICABLE TO THIS CONTRACT IS INCLUDED IN THE NOTICE TO BIDDERS AND SPECIAL PROVISIONS BOOK.

LOCATION MAP

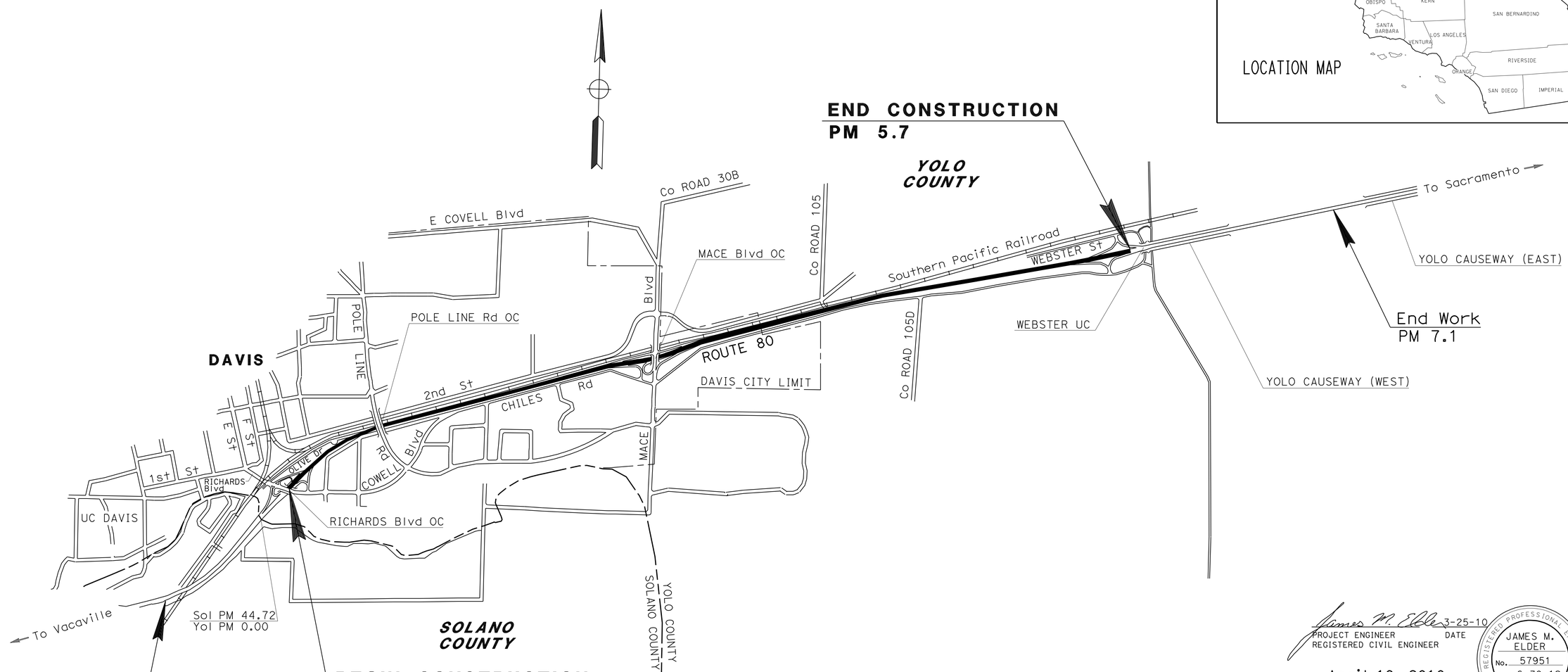

NO SCALE

THE CONTRACTOR SHALL POSSESS THE CLASS (OR CLASSES) OF LICENSE AS SPECIFIED IN THE "NOTICE TO BIDDERS."

PROJECT MANAGER M. MILLARD

DESIGN ENGINEER JIM ELDER

James M. Elder 3-25-10
PROJECT ENGINEER DATE
REGISTERED CIVIL ENGINEER

April 19, 2010
PLANS APPROVAL DATE

REGISTERED PROFESSIONAL ENGINEER JAMES M. ELDER No. 57951 Exp. 6-30-12 CIVIL STATE OF CALIFORNIA

THE STATE OF CALIFORNIA OR ITS OFFICERS OR AGENTS SHALL NOT BE RESPONSIBLE FOR THE ACCURACY OR COMPLETENESS OF SCANNED COPIES OF THIS PLAN SHEET.

CONTRACT No.	03-0F7004
PROJECT ID	0300000101

LAST REVISION 00-00-00

DATE PLOTTED => 30-JUN-2010
TIME PLOTTED => 10:37

Dist	COUNTY	ROUTE	POST MILES TOTAL PROJECT	SHEET No.	TOTAL SHEETS
03	Yol	80	0.2/5.7	2	28

REGISTERED CIVIL ENGINEER 3-25-10 DATE

4-19-10
PLANS APPROVAL DATE

REGISTERED PROFESSIONAL ENGINEER JAMES M. ELDER No. 57951 Exp. 6-30-12 CIVIL STATE OF CALIFORNIA

THE STATE OF CALIFORNIA OR ITS OFFICERS OR AGENTS SHALL NOT BE RESPONSIBLE FOR THE ACCURACY OR COMPLETENESS OF SCANNED COPIES OF THIS PLAN SHEET.

NOTES:

1. DIMENSIONS OF THE PAVEMENT STRUCTURES (STRUCTURAL SECTIONS) ARE SUBJECT TO TOLERANCES SPECIFIED IN THE STANDARD SPECIFICATIONS.
2. SUPERELEVATION AS SHOWN OR AS DIRECTED BY THE ENGINEER.
3. SEE SUMMARY OF QUANTITIES SHEETS FOR LOCATIONS OF THRIE BEAM BARRIER, EXACT LOCATIONS OF RECONSTRUCTION TO BE DETERMINED BY THE ENGINEER.
4. SHOULDER BACKING CROSS SLOPE SHALL BE 10:1 OR FLATTER. WHERE THERE IS INSUFFICIENT ROOM AND IF APPROVED BY THE ENGINEER, A 6:1 CROSS SLOPE WITH A 3′ MINIMUM WIDTH CAN BE USED.
5. THE TOE OF SHOULDER BACKING SHALL BE FLUSH WITH THE TOP OF ANY EXISTING DRAINAGE INLET OR VEGETATION CONTROL (MINOR CONCRETE).

ABBREVIATIONS

UB	UNTREATED BASE
ISM	IMPORTED SUBBASE MATERIAL
CTS	CEMENT TREATED SUBBASE

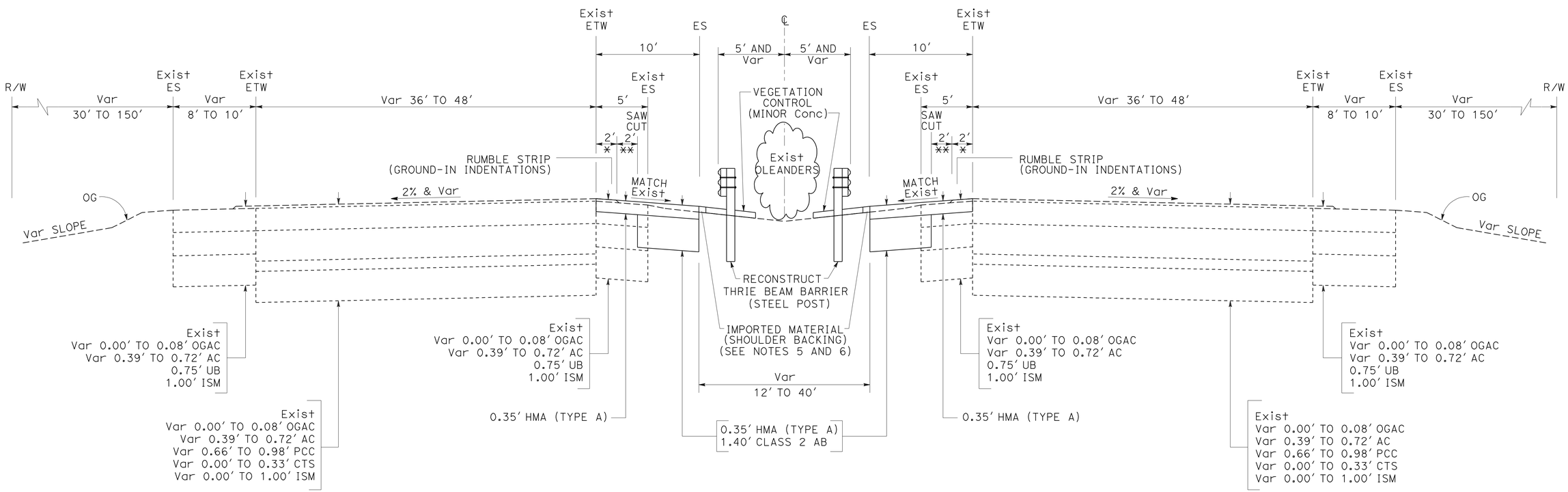

WESTBOUND

ROUTE 80

PM 0.2 TO PM 5.7

*COLD PLANE AC Pvmt (0.35′ Max)
**COLD PLANE AC Pvmt (0.25′ Max)

EASTBOUND

TYPICAL CROSS SECTIONS

NO SCALE

X-1

STATE OF CALIFORNIA - DEPARTMENT OF TRANSPORTATION
Caltrans
SOUTH REGION
OFFICE OF DESIGN, SOUTH
DESIGN BRANCH S11

FUNCTIONAL SUPERVISOR: JAMES M. ELDER
CALCULATED-DESIGNED BY: SYLVIA CHAN
CHECKED BY: CHRISTOPHER BRADANICK
REVISED BY
DATE REVISED

LAST REVISION 00-00-00 | DATE PLOTTED => 30-JUN-2010 | TIME PLOTTED => 10:19

Dist	COUNTY	ROUTE	POST MILES TOTAL PROJECT	SHEET No.	TOTAL SHEETS
03	Yol	80	0.2/5.7	3	28

REGISTERED CIVIL ENGINEER 3-25-10 DATE

4-19-10
PLANS APPROVAL DATE

REGISTERED PROFESSIONAL ENGINEER JAMES M. ELDER No. 57951 Exp. 6-30-12 CIVIL STATE OF CALIFORNIA

THE STATE OF CALIFORNIA OR ITS OFFICERS OR AGENTS SHALL NOT BE RESPONSIBLE FOR THE ACCURACY OR COMPLETENESS OF SCANNED COPIES OF THIS PLAN SHEET.

CONSTRUCTION AREA SIGNS (STATIONARY MOUNTED)

SIGN LETTER ○	SIGN CODE FEDERAL	SIGN CODE CALIFORNIA	PANEL SIZE	SIGN MESSAGE	NUMBER OF POSTS AND SIZE	NUMBER OF SIGNS
A	G20-1[Spec] (6)		84" x 42"	ROAD WORK NEXT 6 MILES	2 - 4" x 6"	4
B		C14	48" x 24"	END ROAD WORK	1 - 4" x 6"	2
C	W20-1	C23	48" x 48"	ROAD WORK AHEAD	1 - 6" x 6"	6
D	G20-2	C14	36" x 18"	END ROAD WORK	1 - 4" x 4"	8
E		C40(Mod)	96" x 60"	TRAFFIC FINES DOUBLED IN WORK ZONES	2 - 6" x 6"	2
F		C44	48" x 48"	TRUCKS ENTERING EXITING	1 - 4" x 6"	4

NOTES:
1. EXACT LOCATION OF SIGNS TO BE DETERMINED BY THE ENGINEER.
2. SEE STAGE CONSTRUCTION AND TRAFFIC HANDLING DETAILS FOR SIGN F AT THE TRUCK ACCESS OPENINGS.

(A) G20-1[Spec] (6)

8" C SERIES LETTERS

84" x 42"
RETROREFLECTIVE ORANGE BACKGROUND WITH BLACK LEGEND AND BORDER.

(E) C40(Mod) (CA)

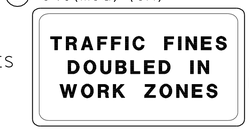

8" D SERIES LETTERS

96" x 60"
RETROREFLECTIVE WHITE BACKGROUND WITH BLACK LEGEND AND BORDER.

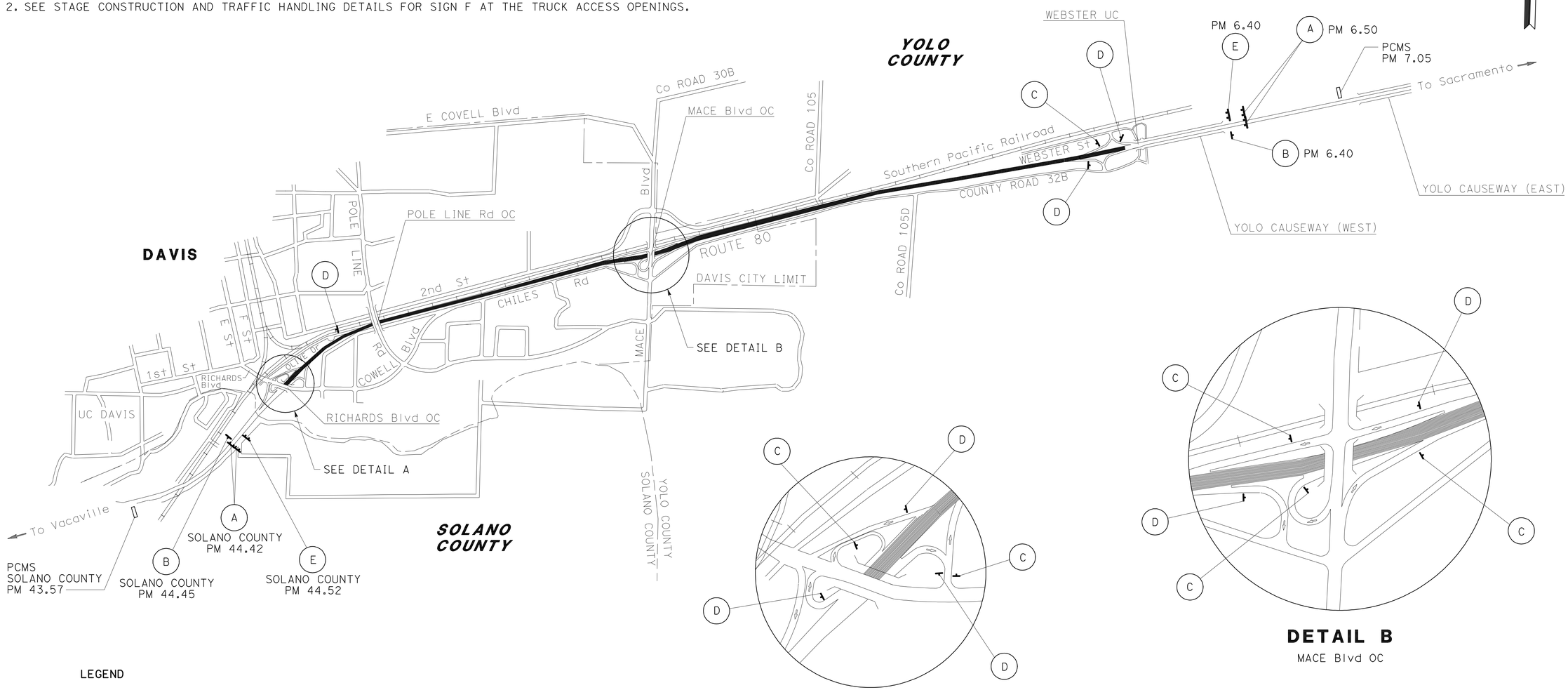

DETAIL A
RICHARDS Blvd OC

DETAIL B
MACE Blvd OC

LEGEND

⇨ DIRECTION OF TRAFFIC ON RAMP

▯ PORTABLE CHANGEABLE MESSAGE SIGN (PCMS)

(CA) CALIFORNIA SIGN CODE

THIS PLAN ACCURATE FOR CONSTRUCTION AREA SIGN WORK ONLY.

CONSTRUCTION AREA SIGNS

NO SCALE

CS-1

STATE OF CALIFORNIA - DEPARTMENT OF TRANSPORTATION
SOUTH REGION
OFFICE OF DESIGN, SOUTH
DESIGN BRANCH S11

FUNCTIONAL SUPERVISOR: JAMES M. ELDER
CALCULATED-DESIGNED BY: SYLVIA CHAN
CHECKED BY: CHRISTOPHER BRADANICK
REVISED BY
DATE REVISED

LAST REVISION 00-00-00
DATE PLOTTED => 30-JUN-2010
TIME PLOTTED => 10:19

Dist	COUNTY	ROUTE	POST MILES TOTAL PROJECT	SHEET No.	TOTAL SHEETS
03	Yol	80	0.2/5.7	4	28

REGISTERED CIVIL ENGINEER 3-25-10 DATE

4-19-10
PLANS APPROVAL DATE

REGISTERED PROFESSIONAL ENGINEER
JAMES M. ELDER
No. 57951
Exp. 6-30-12
CIVIL
STATE OF CALIFORNIA

THE STATE OF CALIFORNIA OR ITS OFFICERS OR AGENTS SHALL NOT BE RESPONSIBLE FOR THE ACCURACY OR COMPLETENESS OF SCANNED COPIES OF THIS PLAN SHEET.

NOTES:

1. ALL APPROACH ENDS OF TEMPORARY RAILING (TYPE K) SHALL BE A MINIMUM OF 15 FEET FROM THE EDGE OF TRAVELED WAY UNLESS CONFORMING TO THE EXISTING CONCRETE BARRIER OR PROTECTED BY A CRASH CUSHION.
2. EXISTING DELINEATION IS DETAIL 13 ON DETAIL 11, DETAIL 14 IS USED IN ADVANCE OF EXISTING EXIT RAMPS.
   REMOVE PAVEMENT MARKERS, AND COVER STRIPES WITH BLACK TEMPORARY TRAFFIC STRIPE (TAPE).
3. PLACE TEMPORARY PAVEMENT DELINEATION AT TRUCK ACCESS OPENING, SEE TRUCK ACCESS OPENING DETAIL.
4. PLACE TEMPORARY PAVEMENT DELINEATION, DETAIL 13 OR 14. SEE Std PLAN A20A FOR TYPES AND LOCATIONS.

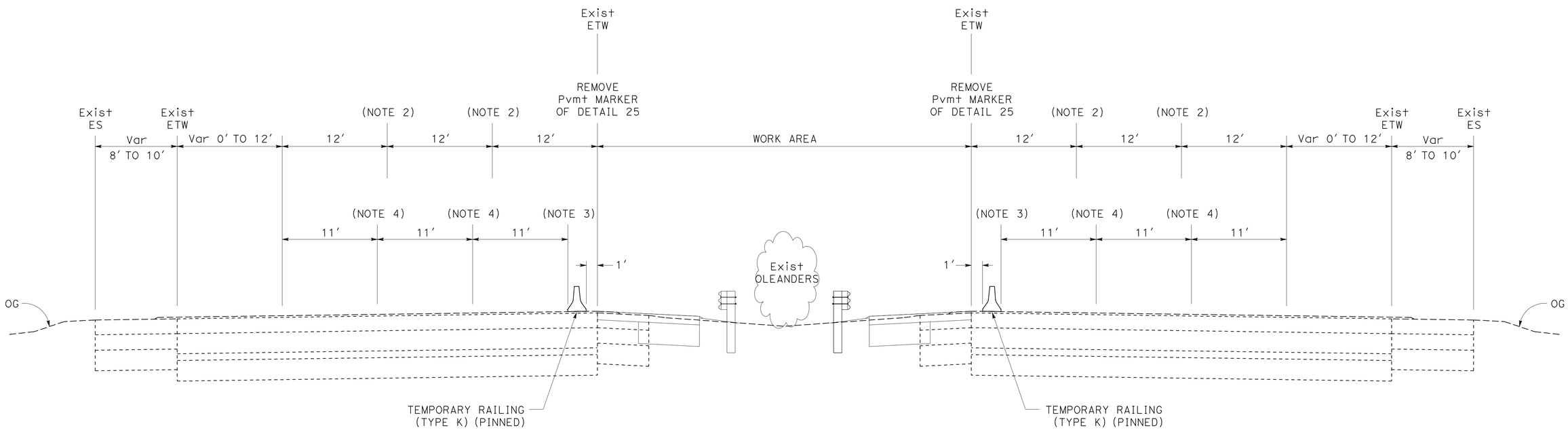

WESTBOUND

ROUTE 80

PM 0.2 TO PM 5.7

EASTBOUND

STAGE CONSTRUCTION AND TRAFFIC HANDLING DETAILS

NO SCALE

SCD-1

STATE OF CALIFORNIA - DEPARTMENT OF TRANSPORTATION
Caltrans
SOUTH REGION
OFFICE OF DESIGN, SOUTH
DESIGN BRANCH S11

FUNCTIONAL SUPERVISOR: JAMES M. ELDER
CALCULATED-DESIGNED BY: SYLVIA CHAN
CHECKED BY: CHRISTOPHER BRADANICK
REVISED BY
DATE REVISED

LAST REVISION 00-00-00
DATE PLOTTED => 30-JUN-2010
TIME PLOTTED => 10:19

Dist	COUNTY	ROUTE	POST MILES TOTAL PROJECT	SHEET No.	TOTAL SHEETS
03	Yol	80	0.2/5.7	5	28

REGISTERED CIVIL ENGINEER 3-25-10 DATE

4-19-10
PLANS APPROVAL DATE

REGISTERED PROFESSIONAL ENGINEER
JAMES M. ELDER
No. 57951
Exp. 6-30-12
CIVIL
STATE OF CALIFORNIA

THE STATE OF CALIFORNIA OR ITS OFFICERS OR AGENTS SHALL NOT BE RESPONSIBLE FOR THE ACCURACY OR COMPLETENESS OF SCANNED COPIES OF THIS PLAN SHEET.

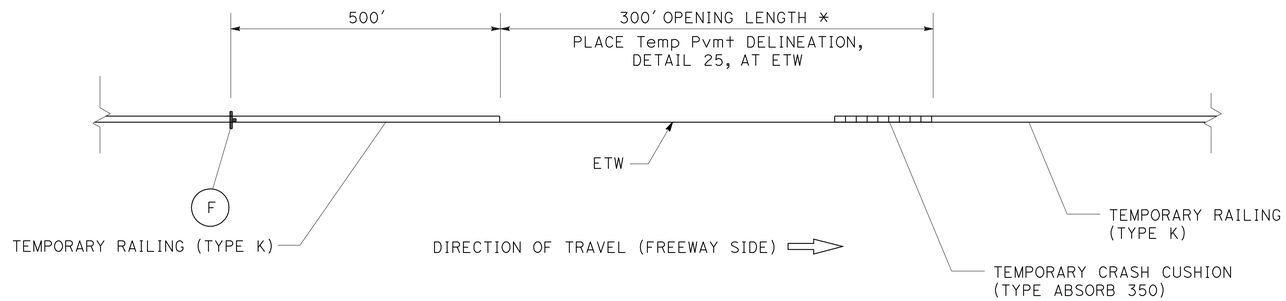

TRUCK ACCESS OPENING DETAIL

* EXACT LOCATIONS AND LENGTHS OF TRUCK ACCESS OPENINGS TO BE DETERMINED BY THE CONTRACTOR AND APPROVED BY THE ENGINEER.

LEGEND

(F) CONSTRUCTION AREA SIGN LETTER

STAGE CONSTRUCTION AND TRAFFIC HANDLING DETAILS

NO SCALE

SCD-2

STATE OF CALIFORNIA - DEPARTMENT OF TRANSPORTATION
Caltrans
SOUTH REGION
OFFICE OF DESIGN, SOUTH
DESIGN BRANCH S11

FUNCTIONAL SUPERVISOR: JAMES M. ELDER
CALCULATED-DESIGNED BY: SYLVIA CHAN
CHECKED BY: CHRISTOPHER BRADANICK
REVISED BY
DATE REVISED

LAST REVISION 00-00-00
DATE PLOTTED => 30-JUN-2010
TIME PLOTTED => 10:19

Dist	COUNTY	ROUTE	POST MILES TOTAL PROJECT	SHEET No.	TOTAL SHEETS
03	Yol	80	0.2/5.7	6	28

REGISTERED CIVIL ENGINEER 3-25-10 DATE

4-19-10
PLANS APPROVAL DATE

REGISTERED PROFESSIONAL ENGINEER JAMES M. ELDER No. 57951 Exp. 6-30-12 CIVIL STATE OF CALIFORNIA

THE STATE OF CALIFORNIA OR ITS OFFICERS OR AGENTS SHALL NOT BE RESPONSIBLE FOR THE ACCURACY OR COMPLETENESS OF SCANNED COPIES OF THIS PLAN SHEET.

TEMPORARY RAILING (TYPE K)

LOCATION PM TO PM	DIRECTION	LOCATION	TEMPORARY RAILING (TYPE K)	REMARKS
	EB/WB	L†/R†	LF	
0.2 TO 5.7	EB	L†	28,440	EXCLUDED 600′ FOR TWO TRUCK ACCESS OPENINGS
0.2 TO 5.7	WB	L†	28,440	EXCLUDED 600′ FOR TWO TRUCK ACCESS OPENINGS
TOTAL			56,880	

TEMPORARY CRASH CUSHION (TYPE ABSORB 350)

LOCATION PM	DIRECTION	LOCATION	TEMPORARY CRASH CUSHION (TYPE ABSORB 350)	REMARKS
	EB/WB	L†/R†	EA	
0.20	EB	L†	1	
1.18	EB	L†	1	AT TRUCK ACCESS OPENING
4.13	EB	L†	1	AT TRUCK ACCESS OPENING
1.55	WB	L†	1	AT TRUCK ACCESS OPENING
4.33	WB	L†	1	AT TRUCK ACCESS OPENING
5.70	WB	L†	1	
TOTAL			6	

CHANNELIZER (SURFACE MOUNTED)

LOCATION PM	DIRECTION	CHANNELIZER (SURFACE MOUNTED)
	EB/WB	EA
0.2	EB	10
5.7	WB	10
TOTAL		20

NOTE: PLACE CHANNELIZERS AT 50′ INTERVALS C-C.

STAGE CONSTRUCTION AND TRAFFIC HANDLING QUANTITIES

SCQ-1

STATE OF CALIFORNIA - DEPARTMENT OF TRANSPORTATION
Caltrans
SOUTH REGION
OFFICE OF DESIGN,SOUTH
DESIGN BRANCH S11

FUNCTIONAL SUPERVISOR: JAMES M. ELDER
CALCULATED-DESIGNED BY: SYLVIA CHAN
CHECKED BY: CHRISTOPHER BRADANICK
REVISED BY
DATE REVISED

LAST REVISION 00-00-00
DATE PLOTTED => 30-JUN-2010
TIME PLOTTED => 10:20

Dist	COUNTY	ROUTE	POST MILES TOTAL PROJECT	SHEET No.	TOTAL SHEETS
03	Yol	80	0.2/5.7	7	28

REGISTERED CIVIL ENGINEER 3-25-10 DATE

4-19-10
PLANS APPROVAL DATE

REGISTERED PROFESSIONAL ENGINEER JAMES M. ELDER No. 57951 Exp. 6-30-12 CIVIL STATE OF CALIFORNIA

THE STATE OF CALIFORNIA OR ITS OFFICERS OR AGENTS SHALL NOT BE RESPONSIBLE FOR THE ACCURACY OR COMPLETENESS OF SCANNED COPIES OF THIS PLAN SHEET.

TEMPORARY PAVEMENT DELINEATION

LOCATION PM	DIRECTION	(N) LENGTH	TEMPORARY TRAFFIC STRIPE (TAPE)			TEMPORARY PAVEMENT MARKER				REMARKS
			BLACK		4" YELLOW	TYPE A	TYPE C	TYPE G	TYPE H	
			FOR ETW	FOR LANE LINES	FOR TRUCK ACCESS OPENING	DETAIL 13 AND 14	DETAIL 14	DETAIL 13	DETAIL 25	
	EB/WB	LF	LF			EA				
0.20	EB	60	60	120		16		4	2	20:1 Min TAPER
0.20 TO 1.29	EB	5,756		11,512		960		242		
1.18	EB	300			300				8	AT TRUCK ACCESS OPENING
1.29 TO 2.43	EB	6,020		12,040		1,008	24	236		
2.43 TO 4.24	EB	9,557		19,114		1,600		402		
4.24 TO 5.38	EB	6,020		12,040		1,008	24	236		
4.13	EB	300			300				8	AT TRUCK ACCESS OPENING
5.38 TO 5.70	EB	1,690		3,380		288		74		
0.20 TO 0.23	WB	159		318		32		10		
0.23 TO 0.50	WB	1,426		2,852		240	8	56		
0.50 TO 0.95	WB	2,376		4,752		400	8	96		
0.95 TO 2.09	WB	6,020		12,040		1,008	24	236		
1.55	WB	300			300				8	AT TRUCK ACCESS OPENING
2.09 TO 2.98	WB	4,700		9,400		784		198		
2.98 TO 4.12	WB	6,020		12,040		1,008	24	236		
4.12 TO 5.70	WB	8,343		16,686		1,392		350		
4.33	WB	300			300				8	AT TRUCK ACCESS OPENING
5.70	WB	60	60	120		16		4	2	20:1 Min TAPER
SUBTOTAL			120	116,414	1,200	9,760	112	2,380	36	
TOTAL			117,734			12,288				

(N) NOT A SEPARATE PAY ITEM, FOR INFORMATION ONLY.

REMOVE PAVEMENT MARKER

LOCATION PM	DIRECTION	DETAIL No.	LENGTH	(N) REMOVE PAVEMENT MARKER				REMARKS
				NON-REFLECTIVE	RETROREFLECTIVE			
				TYPE A	TYPE C	TYPE G	TYPE H	
	EB/WB		LF	EA				
0.20	EB	25	60				2	20:1 Min TAPER
0.20	EB	12 AND 13	60	16		4		20:1 Min TAPER
0.20 TO 5.70	EB	25	29,040				606	
0.20 TO 5.70	EB	12 AND 13	27,312	4,552		1,140		
0.20 TO 5.70	EB	14A	1,728		48			
0.20 TO 5.70	WB	25	29,040				606	
0.20 TO 5.70	WB	12 AND 13	29,736	4,456		1,116		
0.20 TO 5.70	WB	14A	2,304		64			
5.70	WB	25	60				2	20:1 Min TAPER
5.70	WB	12 AND 13	60	16		4		20:1 Min TAPER
SUBTOTAL				9,040	112	2,264	1,216	
TOTAL				12,632				

(N) NOT A SEPARATE PAY ITEM, FOR INFORMATION ONLY.

STAGE CONSTRUCTION AND TRAFFIC HANDLING QUANTITIES

SCQ-2

REVISED BY | DATE REVISED
SYLVIA CHAN | CHRISTOPHER BRADANICK
CALCULATED-DESIGNED BY | CHECKED BY
FUNCTIONAL SUPERVISOR: JAMES M. ELDER

STATE OF CALIFORNIA - DEPARTMENT OF TRANSPORTATION
Caltrans
SOUTH REGION
OFFICE OF DESIGN, SOUTH
DESIGN BRANCH S11

LAST REVISION 00-00-00 | DATE PLOTTED => 30-JUN-2010 | TIME PLOTTED => 10:20

Dist	COUNTY	ROUTE	POST MILES TOTAL PROJECT	SHEET No.	TOTAL SHEETS
03	Yol	80	0.2/5.7	8	28

James M. Elder 3-25-10
REGISTERED CIVIL ENGINEER DATE

4-19-10
PLANS APPROVAL DATE

REGISTERED PROFESSIONAL ENGINEER
JAMES M. ELDER
No. 57951
Exp. 6-30-12
CIVIL
STATE OF CALIFORNIA

THE STATE OF CALIFORNIA OR ITS OFFICERS OR AGENTS SHALL NOT BE RESPONSIBLE FOR THE ACCURACY OR COMPLETENESS OF SCANNED COPIES OF THIS PLAN SHEET.

PAVEMENT MARKERS AND TRAFFIC LINES

LOCATION PM	DIRECTION	(N) LENGTH	4" THERMOPLASTIC TRAFFIC STRIPE			PAVEMENT MARKER (RETROREFLECTIVE)			REMARKS
			YELLOW	WHITE					
			DETAIL No.			TYPE			
			25	12	14A	C	G	H	
	EB/WB	LF	LF			EA			
0.20	EB	60	60	120			4	2	TAPER
0.20 TO 1.29	EB	5,756	5,756	11,512			242	121	
1.29 TO 2.43	EB	6,020	6,020	11,176	864	24	236	127	
2.43 TO 4.24	EB	9,557	9,557	19,114			402	201	
4.24 TO 5.38	EB	6,020	6,020	11,176	864	24	236	127	
5.38 TO 5.70	EB	1,690	1,690	3,380			74	37	
0.20 TO 0.23	WB	159	159	318			10	5	
0.23 TO 0.50	WB	1,426	1,426	2,564	288	8	56	31	
0.50 TO 0.95	WB	2,376	2,376	4,464	288	8	96	51	
0.95 TO 2.09	WB	6,020	6,020	11,176	864	24	236	127	
2.09 TO 2.98	WB	4,700	4,700	9,400			198	99	
2.98 TO 4.12	WB	6,020	6,020	11,176	864	24	236	127	
4.12 TO 5.70	WB	8,343	8,343	16,686			350	175	
5.70	WB	60	60	120			4	2	TAPER
SUBTOTAL			58,207	112,382	4,032	112	2,380	1,232	
TOTAL				174,621			3,724		

(N) NOT A SEPARATE PAY ITEM, FOR INFORMATION ONLY.

PAVEMANT DELINEATION QUANTITIES

PDQ-1

STATE OF CALIFORNIA - DEPARTMENT OF TRANSPORTATION
Caltrans
SOUTH REGION
OFFICE OF DESIGN,SOUTH
DESIGN BRANCH S11

FUNCTIONAL SUPERVISOR: JAMES M. ELDER
CALCULATED-DESIGNED BY: SYLVIA CHAN
CHECKED BY: CHRISTOPHER BRADANICK
REVISED BY
DATE REVISED

LAST REVISION 00-00-00
DATE PLOTTED => 30-JUN-2010
TIME PLOTTED => 10:20

Dist	COUNTY	ROUTE	POST MILES TOTAL PROJECT	SHEET No.	TOTAL SHEETS
03	Yol	80	0.2/5.7	9	28

REGISTERED CIVIL ENGINEER 3-25-10 DATE

4-19-10
PLANS APPROVAL DATE

REGISTERED PROFESSIONAL ENGINEER JAMES M. ELDER No. 57951 Exp. 6-30-12 CIVIL STATE OF CALIFORNIA

THE STATE OF CALIFORNIA OR ITS OFFICERS OR AGENTS SHALL NOT BE RESPONSIBLE FOR THE ACCURACY OR COMPLETENESS OF SCANNED COPIES OF THIS PLAN SHEET.

EARTHWORK QUANTITIES

LOCATION PM TO PM	DIRECTION	ROADWAY EXCAVATION	IMPORTED MATERIAL (SHOULDER BACKING)
	EB/WB	CY	TON
0.2 TO 5.7	EB	11,294	2,469
0.2 TO 5.7	WB	11,294	2,469
TOTAL		22,588	4,938

RUMBLE STRIP

LOCATION PM TO PM	DIRECTION	LOCATION	(N) LENGTH	RUMBLE STRIP
	EB/WB	Lt/Rt	LF	STA
0.2 TO 5.7	EB	Lt	29,040	291
0.2 TO 5.7	WB	Lt	29,040	291
TOTAL				582

(N) NOT A SEPARATE PAY ITEM, FOR INFORMATION ONLY.

ROADWAY QUANTITIES

LOCATION PM TO PM	DIRECTION	(N) LENGTH	COLD PLANE AC PAVEMENT		HOT MIX ASPHALT (TYPE A)	CLASS 2 AGGREGATE BASE
			0.35' Max	0.25' Max		
	EB/WB	LF	SQYD	SQYD	TON	CY
0.2 TO 5.7	EB	29,040	6,454	6,454	8,132	9,035
0.2 TO 5.7	WB	29,040	6,454	6,454	8,132	9,035
SUBTOTAL			12,908	12,908	16,264	18,070
TOTAL			25,816		16,264	18,070

(N) NOT A SEPARATE PAY ITEM, FOR INFORMATION ONLY.

RECONSTRUCT THRIE BEAM BARRIER

LOCATION PM TO PM	DIRECTION	LOCATION	RECONSTRUCT THRIE BEAM BARRIER (STEEL POST)	VEGETATION CONTROL (MINOR CONCRETE)
	EB/WB	Lt/Rt/ Med	LF	SQYD
0.2 TO 5.7	EB	Med	29,040	15,100
0.2 TO 5.7	WB	Med	29,040	15,100
TOTAL			58,080	30,200

TACK COAT

LOCATION PM TO PM	DIRECTION	(N) LENGTH	(N) SURFACE AREA		TACK COAT
			FOR HMA (TYPE A) OVER NEW HMA	FOR HMA (TYPE A) OVER Exist AC	
	EB/WB	LF	SQYD		TON
0.2 TO 5.7	EB	29,040	32,267	12,907	11
0.2 TO 5.7	WB	29,040	32,267	12,907	11
TOTAL					22

(N) NOT A SEPARATE PAY ITEM, FOR INFORMATION ONLY.

TEMPORARY CONSTRUCTION BMPS

ITEM / DESCRIPTION	UNIT	QUANTITY
TEMPORARY DRAINAGE INLET PROTECTION	EA	25
TEMPORARY FIBER ROLL	LF	14,520
TEMPORARY CONSTRUCTION ENTRANCE	EA	4
TEMPORARY COVER	SQYD	6,500
TEMPORARY HYDRAULIC MULCH (BONDED FIBER MATRIX)	SQYD	13,000
TEMPORARY CONCRETE WASHOUT FACILITY	EA	6

SUMMARY OF QUANTITIES

Q-1

REVISED BY | DATE REVISED
SYLVIA CHAN | CHRISTOPHER BRADANICK
CALCULATED-DESIGNED BY | CHECKED BY
FUNCTIONAL SUPERVISOR: JAMES M. ELDER
STATE OF CALIFORNIA - DEPARTMENT OF TRANSPORTATION
Caltrans
SOUTH REGION
OFFICE OF DESIGN, SOUTH
DESIGN BRANCH S11

LAST REVISION 00-00-00 | DATE PLOTTED => 30-JUN-2010 | TIME PLOTTED => 10:20

Dist	COUNTY	ROUTE	POST MILES TOTAL PROJECT	SHEET No.	TOTAL SHEETS
03	Yol	80	0.2/5.7	10	28

Normanye 3-25-10
REGISTERED ELECTRICAL ENGINEER

4-19-10
PLANS APPROVAL DATE

REGISTERED PROFESSIONAL ENGINEER NORMAN YE No. E-16913 Exp. 6-30-11 ELECTRICAL STATE OF CALIFORNIA

THE STATE OF CALIFORNIA OR ITS OFFICERS OR AGENTS SHALL NOT BE RESPONSIBLE FOR THE ACCURACY OR COMPLETENESS OF ELECTRONIC COPIES OF THIS PLAN SHEET.

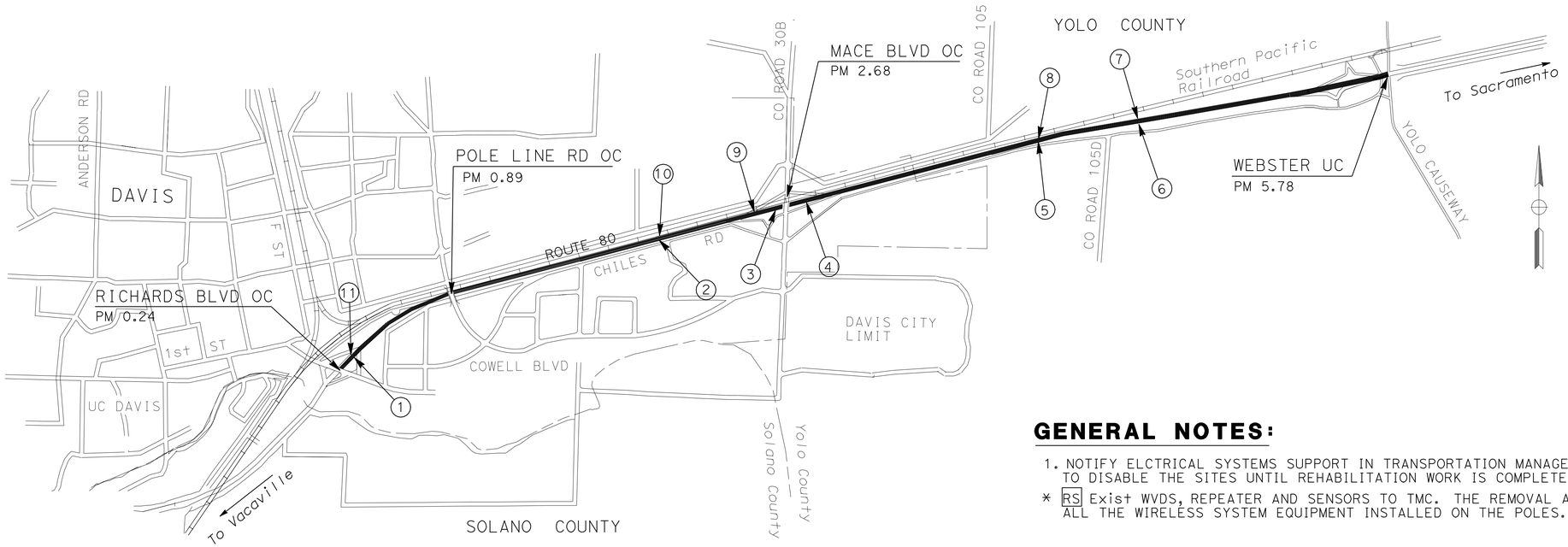

GENERAL NOTES:

1. NOTIFY ELCTRICAL SYSTEMS SUPPORT IN TRANSPORTATION MANAGEMENT CENTER BEFORE START OF WORK TO DISABLE THE SITES UNTIL REHABILITATION WORK IS COMPLETED.

* RS Exist WVDS, REPEATER AND SENSORS TO TMC. THE REMOVAL AND SALVAGING WILL INCLUDE THE POLES AND ALL THE WIRELESS SYSTEM EQUIPMENT INSTALLED ON THE POLES.

QUANTITY TABLE:

LOCATION No.	APPROXIMATE LOCATION	ELEMENTS	CO	RTE	APPROXIMATE POST MILE	SIDE OF FREEWAY	LOOP (6 X 6) (EACH)	SC (EACH)	CC (EACH)	No. 5 PULL BOX (EACH)	No. 5 (T) PULL BOX (EACH)	RC Exist dh (EACH)	TERMINATE CONDUIT 2" (EACH)	TERMINATE CONDUIT 3" (EACH)	DETECTOR TERMINATION SHOULDER	DLC (FT)	RS Exist WVDS SENSOR (EACH)	MVDS (FT)	CONDUIT 2" (FT)	CONDUIT 3" (FT)	TELEPHONE CABLE (FT)	STRANDED WIRE THW No. 6 (FT)	T&B 30" DEPTH (FT)	NOTES:
1	0.1 MI EAST OF RICHARDS BLVD OC	TMS/LIGHTING	Yol	80	0.34	EB	4	2	3	1		1	3		1	2200			100			750	100	
2	0.68 MI WEST OF MACE BLVD OC	MVDS	Yol	80	2	EB			1									50		50			50	
3	MACE BLVD OC	RMS	Yol	80	2.6	EB	2		1		1	1		2	1	640				20			20	
4	0.1 MI EAST OF MACE BLVD OC	RMS	Yol	80	2.78	EB	2		1		1	1		2	1	800				20			20	
5	1.78 MI WEST OF WEBSTER UC	TMS	Yol	80	4	EB	2		1		1			3	1	240				30			30	
6	1.28 MI WEST OF WEBSTER UC	TMS/WVDS	Yol	80	4.5	EB	2		1		1			3	1	240	6			30			30	*
7	1.28 MI WEST OF WEBSTER UC	TMS/WVDS	Yol	80	4.5	WB	2		1		1			3	1	1200	6			30			30	*
8	1.78 MI WEST OF WEBSTER UC	TMS	Yol	80	4	WB	2		1		1			3	1	1200				30			30	
9	0.2 MI WEST OF MACE BLVD OC	RMS	Yol	80	2.48	WB	2	2	2		1	1		2	1	500			80	20			100	
10	0.68 MI WEST OF MACE BLVD OC	MVDS	Yol	80	2	WB			1									50		50	200		50	
11	0.1 MI EAST OF RICHARDS BLVD OC	TMS/LIGHTING	Yol	80	0.34	WB	2	2	3	1		1	3		1	250			70			750	70	
						TOTAL:	20	6	16	2	7	5	6	18	9	7270	12	100	250	280	200	1500	530	

MODIFY TRAFFIC OPERATION SYSTEM (TOS)

NO SCALE

THIS PLAN IS ACCURATE FOR ELECTRICAL WORK ONLY

E-1

STATE OF CALIFORNIA - DEPARTMENT OF TRANSPORTATION
Caltrans
OFFICE OF ELECTRICAL DESIGN SACRAMENTO

FUNCTIONAL SUPERVISOR: NELSON LEE
CALCULATED-DESIGNED BY: YOUNG TON
CHECKED BY: NORMAN YEE
REVISED BY: 2-15-10
DATE REVISED: 2-15-10

LAST REVISION 2-15-10
DATE PLOTTED => 30-JUN-2010
TIME PLOTTED => 10:20

DIST	COUNTY	ROUTE	POST MILES TOTAL PROJECT	SHEET NO.	TOTAL SHEETS
03	Yol	80	0.2/5.7	11	28

Randell D. Hiatt
REGISTERED CIVIL ENGINEER

June 6, 2008
PLANS APPROVAL DATE

REGISTERED PROFESSIONAL ENGINEER
Randell D. Hiatt
No. C50200
Exp. 6-30-09
CIVIL
STATE OF CALIFORNIA

The State of California or its officers or agents shall not be responsible for the accuracy or completeness of electronic copies of this plan sheet.

To accompany plans dated 4-19-10

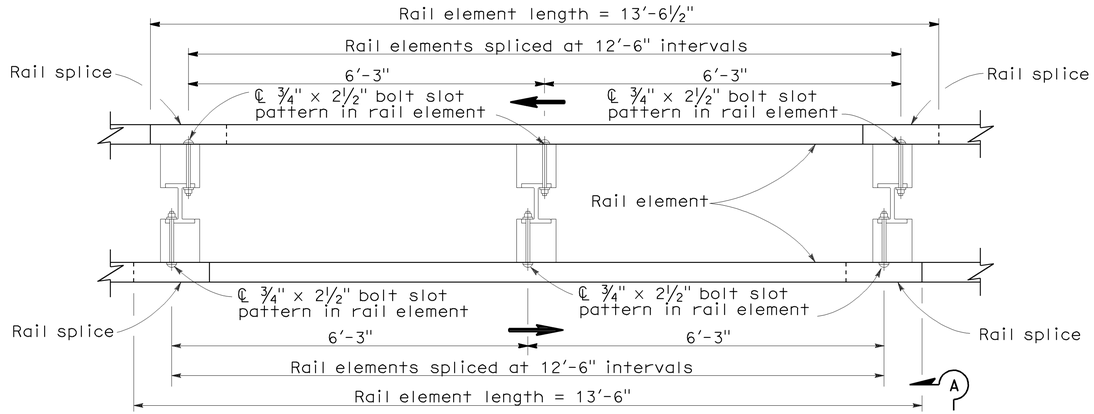

PLAN

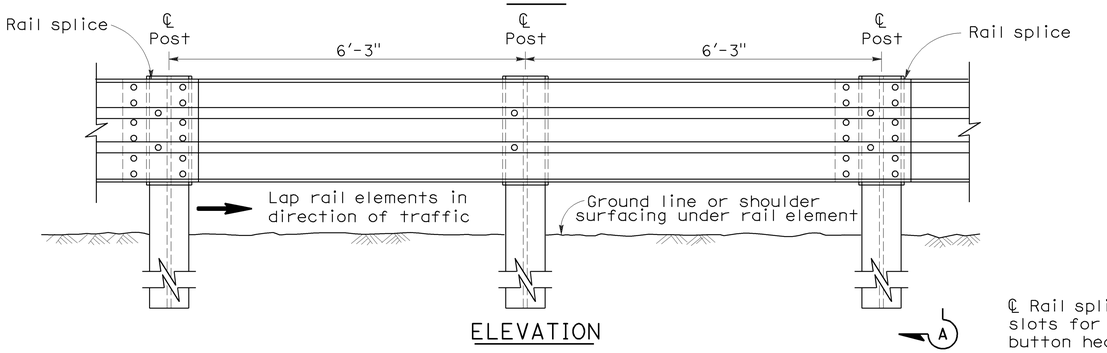

ELEVATION

DOUBLE THRIE BEAM BARRIER

(Steel post with notched wood or notched plastic blocks)
See Note 1

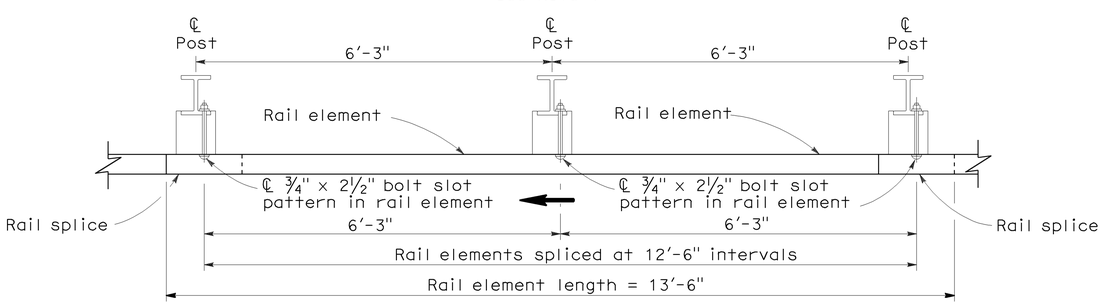

PLAN

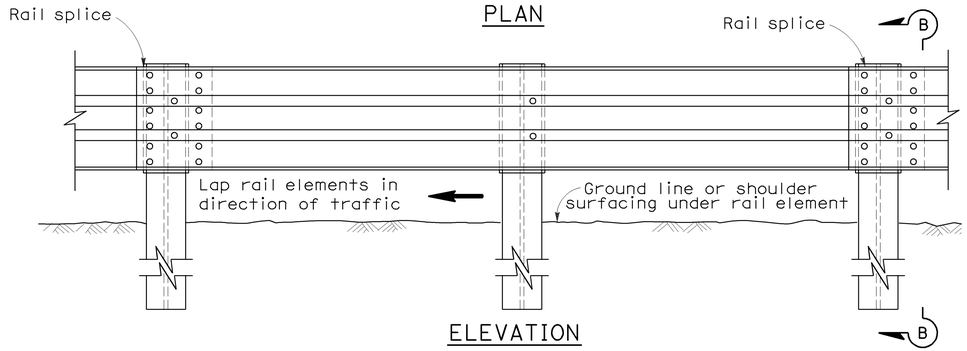

ELEVATION

SINGLE THRIE BEAM BARRIER

(Steel post with notched wood or notched plastic blocks)
See Note 1

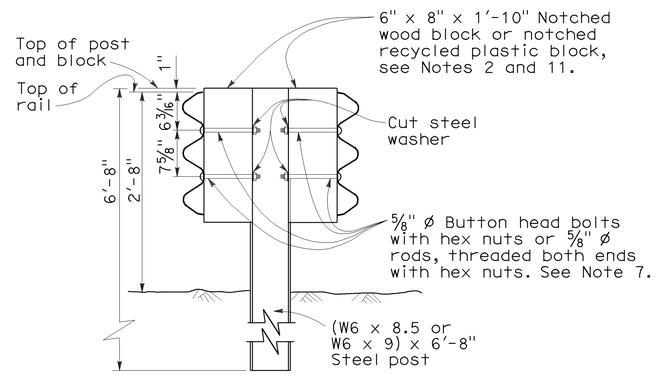

SECTION A-A

TYPICAL STEEL LINE POST INSTALLATION

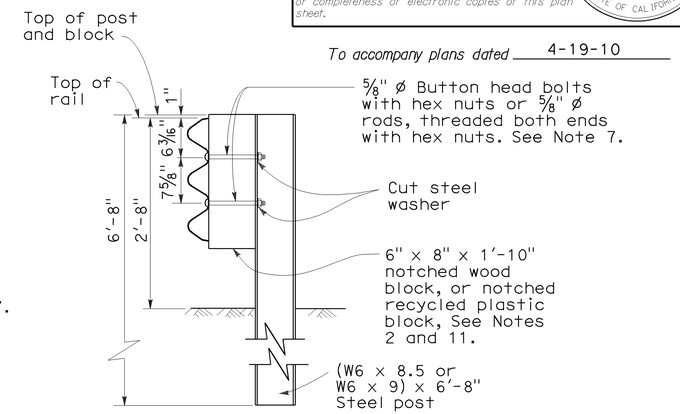

SECTION B-B

TYPICAL STEEL LINE POST INSTALLATION

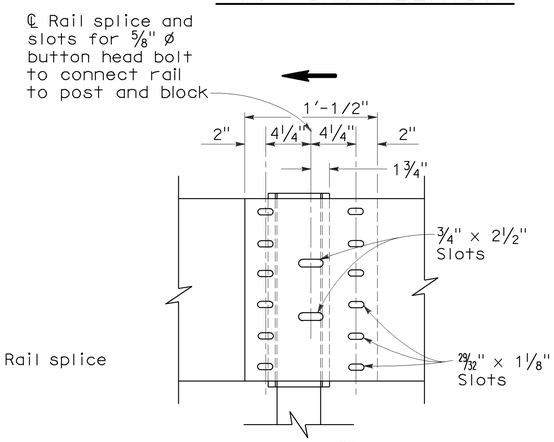

ELEVATION

RAIL ELEMENT SPLICE DETAIL

a) Connect the overlapped ends of the thrie beam rail elements with ⅝" ø x 1⅛" button head oval shoulder bolts inserted into the 29/32" x 1⅛" slots and bolted together with ⅝" ø x 1⅛" recessed hex nuts. Recess of hex nut points toward rail element. A total of 12 bolts and nuts are to be used at each rail splice connection.

b) The ends of the rail elements are to be overlapped in the direction of traffic (see details).

c) Where end cap is to be attached to the end of a rail element, a total of 4 of the above described splice bolts and nuts are to be used. Where a return cap is to be attached to the ends of rail elements, a total of 8 of the above described splice bolts and nuts are to be used.

NOTES:

1. For details of the cross section of the thrie beam rail element and details for wood post with wood block installations, see Standard Plan A78A.
2. For details of standard hardware, posts and blocks used to construct thrie beam barrier, see Revised Standard Plan RSP A78C1 and Standard Plan A78C2.
3. Thrie beam barrier post spacing to be 6'-3" center to center, except as otherwise noted.
4. Top of barrier rail to be 2'-8" above ground line or shoulder surfacing under the rail element.
5. For barrier end treatments and barrier connections, see Standard Plans A78E1, A78E2 and A78E3, Revised Standard Plans RSPs A78F1 and A78F2, Standard Plan A78G and Revised Standard Plan RSP A78H.
6. For connection to Concrete Barrier, see Revised Standard Plan RSP A78I.
7. Attach rail element to block and steel post with 2 bolts or rods on approaching traffic side of block and post web. No washer on rail face for rod or bolted connections to line post.
8. For details of thrie beam barrier on bridges, see Standard Plan A78D2. For details of thrie beam barrier at fixed objects, see Standard Plan A78D1.
9. Direction of traffic indicated by ⟶.
10. Notched face of block faces steel post.

STATE OF CALIFORNIA
DEPARTMENT OF TRANSPORTATION

THRIE BEAM BARRIER STANDARD BARRIER RAILING SECTION (STEEL POST WITH NOTCHED WOOD BLOCK OR NOTCHED RECYCLED PLASTIC BLOCK)

NO SCALE

RSP A78B DATED JUNE 6, 2008 SUPERSEDES STANDARD PLAN A78B DATED MAY 1, 2006 - PAGE 84 OF THE STANDARD PLANS BOOK DATED MAY 2006.

REVISED STANDARD PLAN RSP A78B

2006 REVISED STANDARD PLAN RSP A78B

5-14-08

DIST	COUNTY	ROUTE	POST MILES TOTAL PROJECT	SHEET No.	TOTAL SHEETS
03	Yol	80	0.2/5.7	12	28

Randell D. Hiatt
REGISTERED CIVIL ENGINEER

June 6, 2008
PLANS APPROVAL DATE

REGISTERED PROFESSIONAL ENGINEER
Randell D. Hiatt
No. C50200
Exp. 6-30-09
CIVIL
STATE OF CALIFORNIA

The State of California or its officers or agents shall not be responsible for the accuracy or completeness of electronic copies of this plan sheet.

To accompany plans dated 4-19-10

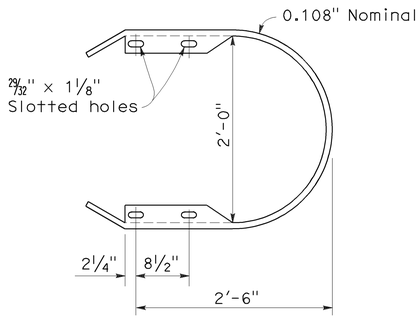

RETURN CAP
(TYPE TA)

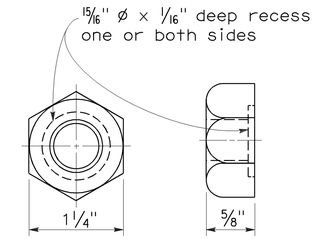

5/8" ø RECESS NUT

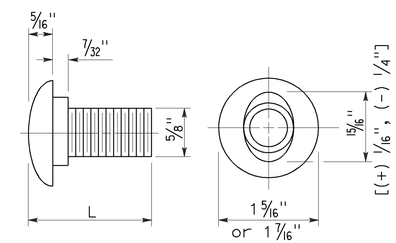

5/8" ø BUTTON HEAD BOLT

L	THREAD LENGTH
1 1/4"	full thread length
2"	full thread length
9 1/2"	4" Min thread length
18"	4" Min thread length

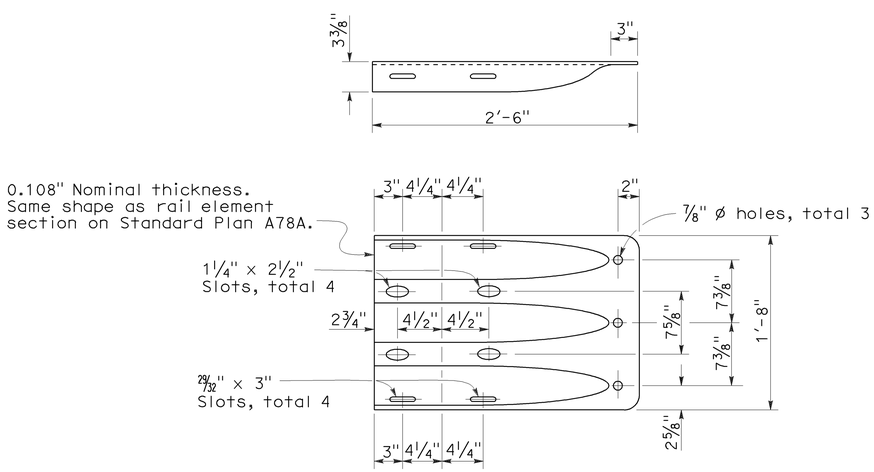

END CAP
(TYPE TC)

STATE OF CALIFORNIA
DEPARTMENT OF TRANSPORTATION

THRIE BEAM BARRIER STANDARD HARDWARE DETAILS

NO SCALE

RSP A78C1 DATED JUNE 6, 2008 SUPERSEDES STANDARD PLAN A78C1
DATED MAY 1, 2006 - PAGE 85 OF THE STANDARD PLANS BOOK DATED MAY 2006.

REVISED STANDARD PLAN RSP A78C1

2006 REVISED STANDARD PLAN RSP A78C1

4-21-08

DIST	COUNTY	ROUTE	POST MILES TOTAL PROJECT	SHEET NO.	TOTAL SHEETS
03	Yol	80	0.2/5.7	13	28

Randell D. Hiatt
REGISTERED CIVIL ENGINEER

October 20, 2006
PLANS APPROVAL DATE

REGISTERED PROFESSIONAL ENGINEER
Randell D. Hiatt
No. C50200
Exp. 6-30-07
CIVIL
STATE OF CALIFORNIA

The State of California or its officers or agents shall not be responsible for the accuracy or completeness of electronic copies of this plan sheet.

To accompany plans dated 4-19-10

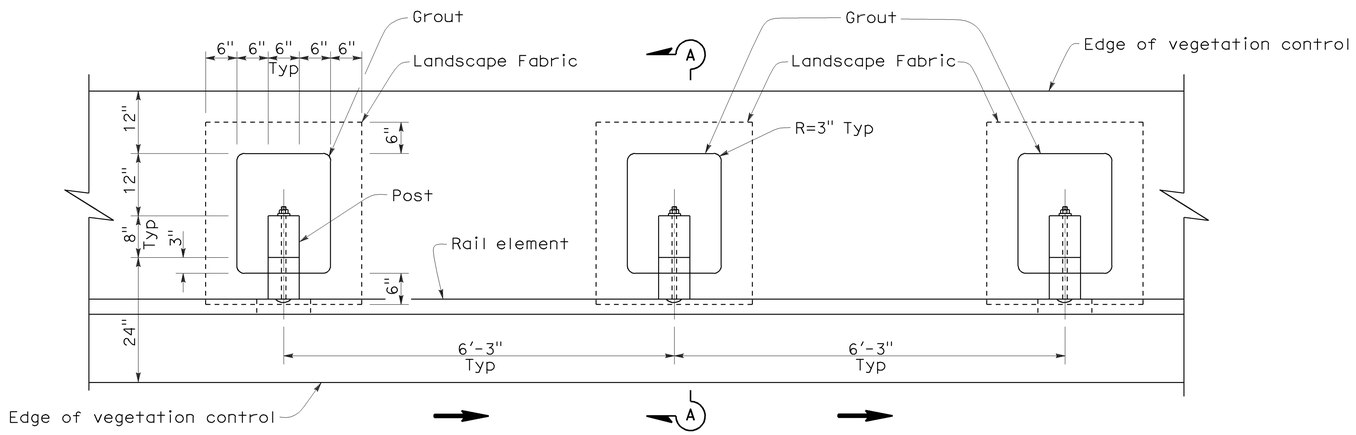

PLAN

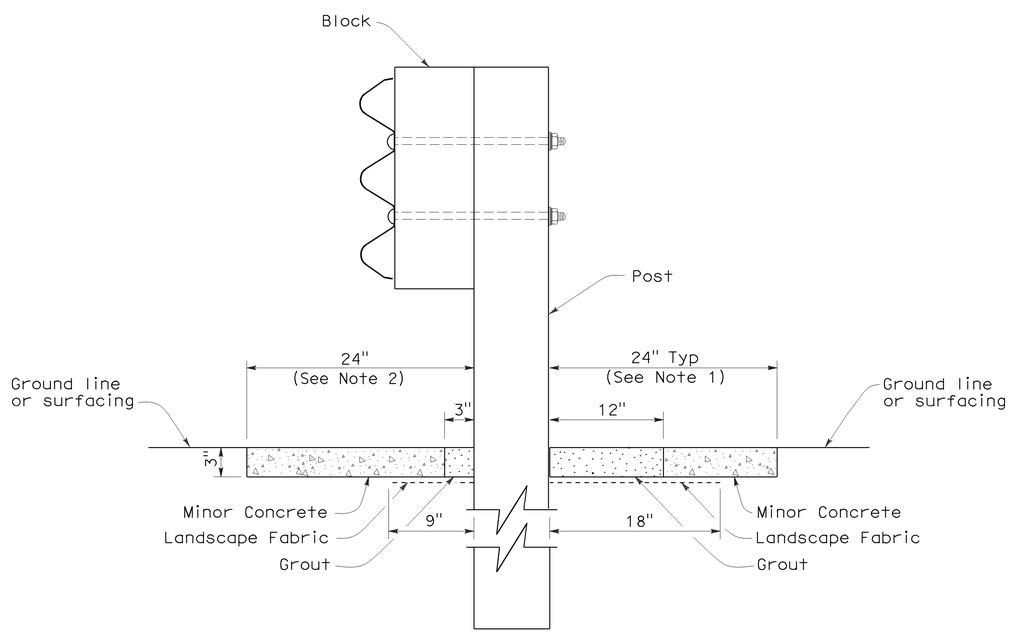

SECTION A-A

NOTES:

1. Where the distance between back of post and hinge point is less than 24", vegetation control to be constructed flush with the back edge of the post.
2. Where dike is constructed under barrier, construct vegetation control to back edge of dike. Where paved shoulder is constructed within 24" in front of the post, construct vegetation control to the edge of paved shoulder.
3. Direction of adjacent traffic indicated by ⟶ .

STATE OF CALIFORNIA
DEPARTMENT OF TRANSPORTATION

SINGLE THRIE BEAM BARRIER TYPICAL VEGETATION CONTROL STANDARD BARRIER RAILING SECTION

NO SCALE

NSP A78C3 DATED OCTOBER 20, 2006 SUPPLEMENTS THE STANDARD PLANS BOOK DATED MAY 2006.

NEW STANDARD PLAN NSP A78C3

2006 NEW STANDARD PLAN NSP A78C3

7-17-06

DIST	COUNTY	ROUTE	POST MILES TOTAL PROJECT	SHEET NO.	TOTAL SHEETS
03	Yol	80	0.2/5.7	14	28

Randell D. Hiatt
REGISTERED CIVIL ENGINEER

October 20, 2006
PLANS APPROVAL DATE

REGISTERED PROFESSIONAL ENGINEER
Randell D. Hiatt
No. C50200
Exp. 6-30-07
CIVIL
STATE OF CALIFORNIA

The State of California or its officers or agents shall not be responsible for the accuracy or completeness of electronic copies of this plan sheet.

To accompany plans dated 4-19-10

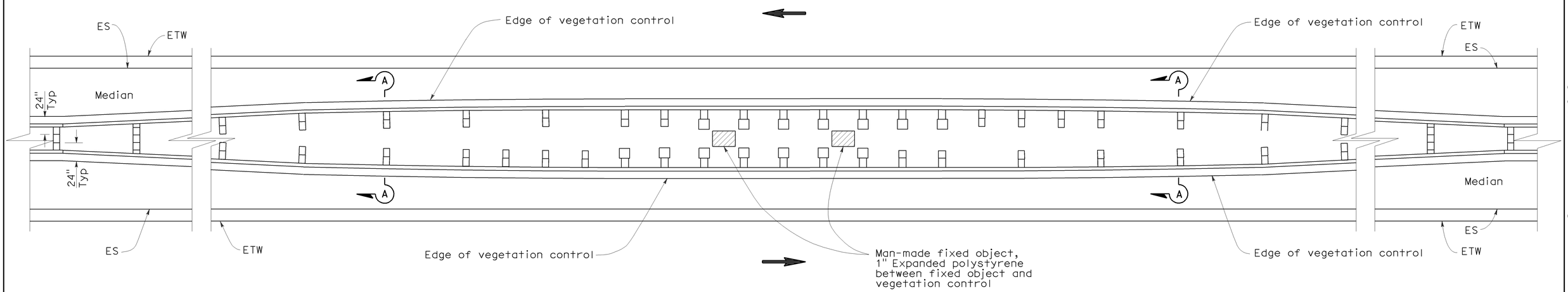

PLAN

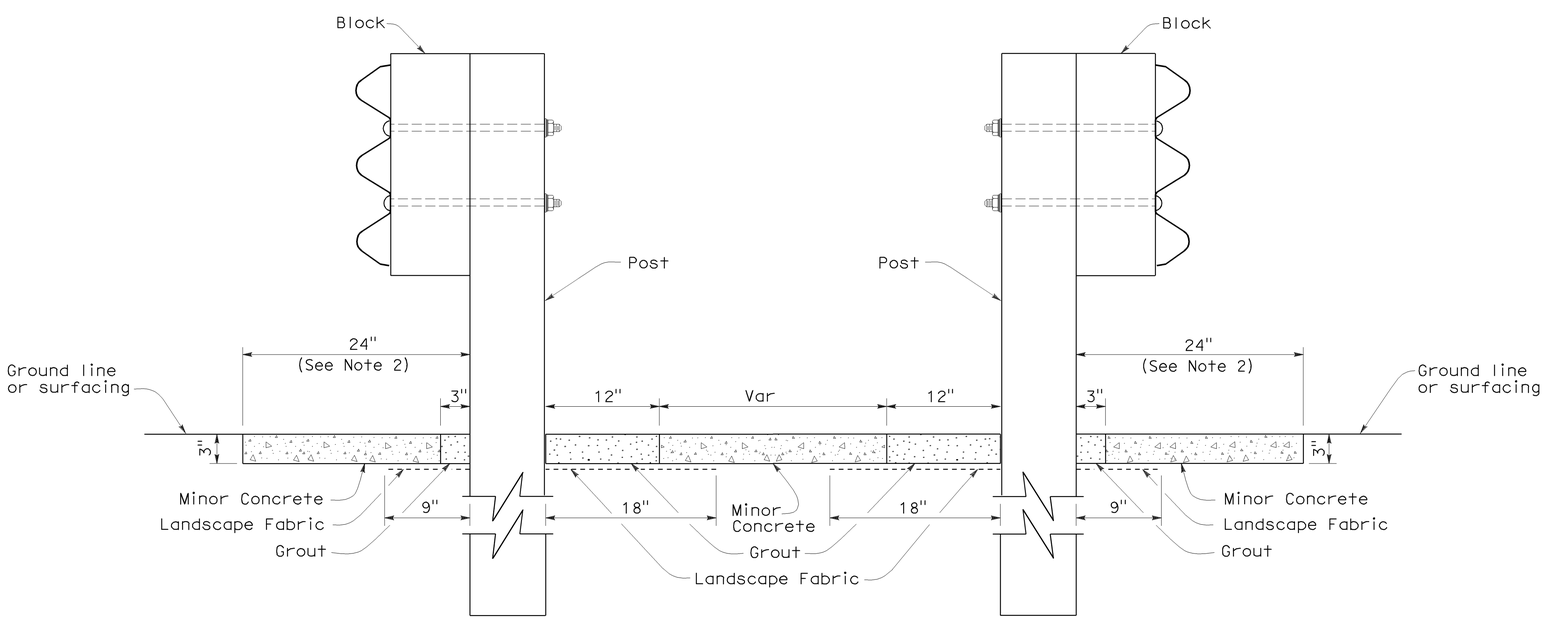

SECTION A-A

NOTES:

1. See New Standard Plan NSP A78C3 for additional vegetation control.
2. Where dike is constructed under barrier, construct vegetation control to back edge of dike. Where paved shoulder is constructed within 24" in front of the post, construct vegetation control to the edge of paved shoulder.
3. Direction of adjacent traffic indicated by ←.

STATE OF CALIFORNIA
DEPARTMENT OF TRANSPORTATION

THRIE BEAM BARRIER TYPICAL VEGETATION CONTROL AT FIXED OBJECTS IN MEDIAN

NO SCALE

NSP A78C5 DATED OCTOBER 20, 2006 SUPPLEMENTS THE STANDARD PLANS BOOK DATED MAY 2006.

NEW STANDARD PLAN NSP A78C5

2006 NEW STANDARD PLAN NSP A78C5

7-17-06

To accompany plans dated 4-19-10

DIST	COUNTY	ROUTE	POST MILES TOTAL PROJECT	SHEET NO.	TOTAL SHEETS
03	Yol	80	0.2/5.7	15	28

Randell D. Hiatt
REGISTERED CIVIL ENGINEER

June 6, 2008
PLANS APPROVAL DATE

REGISTERED PROFESSIONAL ENGINEER
Randell D. Hiatt
No. C50200
Exp. 6-30-09
CIVIL
STATE OF CALIFORNIA

The State of California or its officers or agents shall not be responsible for the accuracy or completeness of electronic copies of this plan sheet.

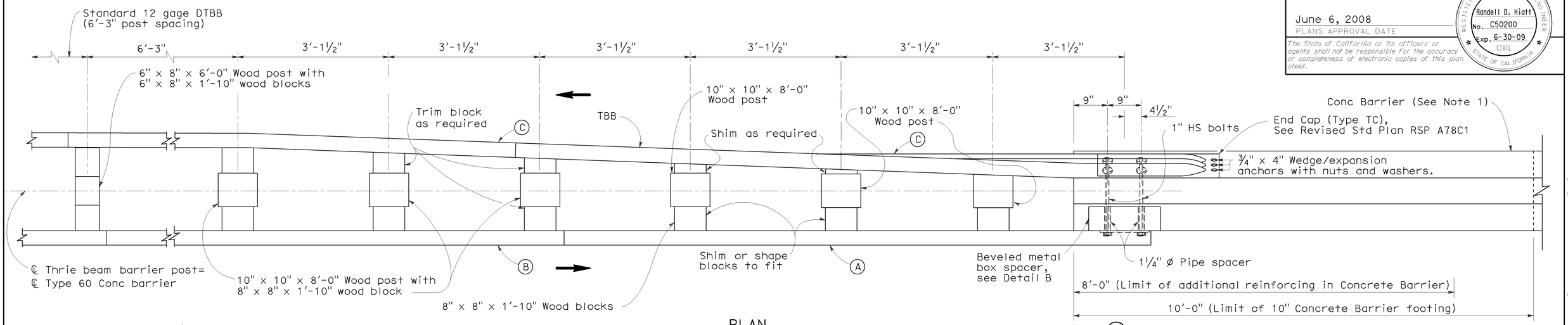

PLAN

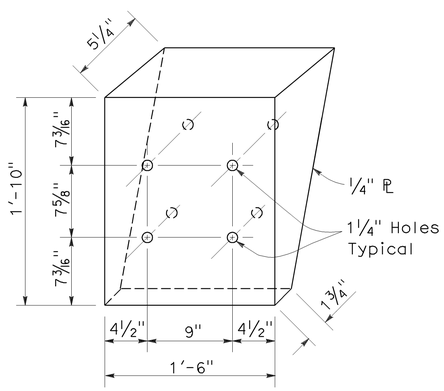

DETAIL B

Beveled metal box spacer
See Note 3

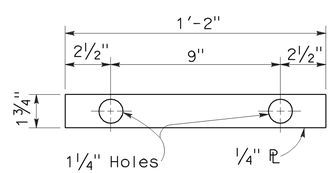

DETAIL C

PLATE 'A'

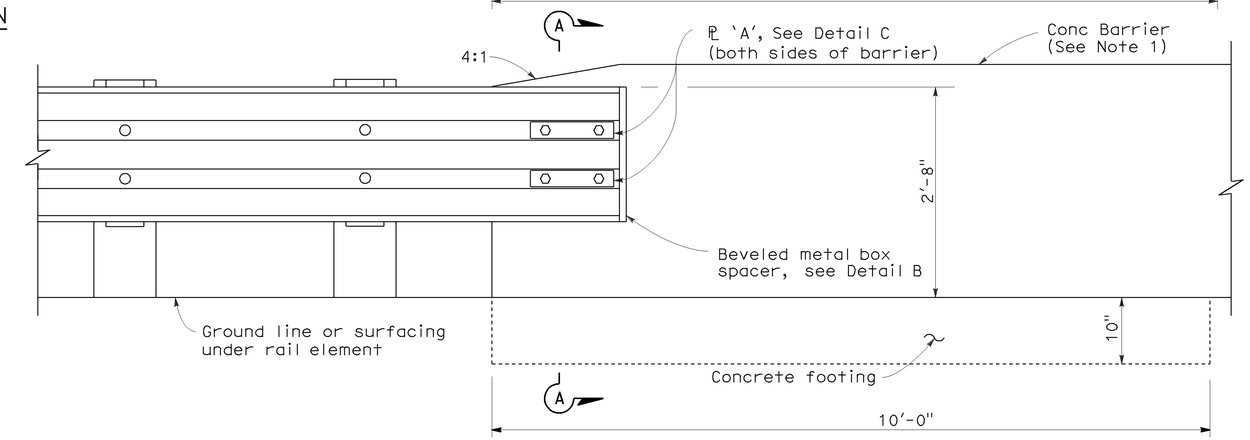

ELEVATION

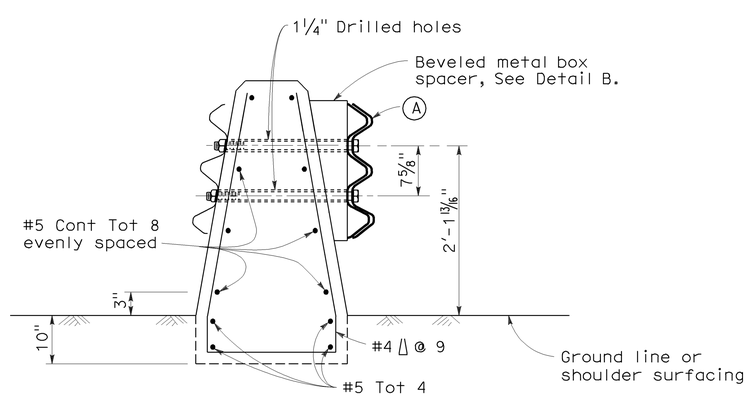

SECTION A-A

(Type 60 Conc Barrier shown)

LEGEND

(A) Nested thrie beam elements (one 12 gage element nested over one 10 gage element).

(B) One 10 gage thrie beam element.

(C) One 12 gage thrie beam element.

10 gage = 0.135" thick

12 gage = 0.108" thick

NOTES:

1. For details of Concrete Barrier Type 60, see Revised Standard Plan RSP A76A. Thrie beam barrier connections to Concrete Barrier Type 60S and Type 60G are similar to details shown on this plan.
2. For additional thrie beam barrier details, see Standard Plan A78A, Revised Standard Plans RSPs A78B and A78C1, and Standard Plan A78C2.
3. Where beveled metal box spacer is installed, place 1¼" ø x 3¼" and 1¼" ø x 2" pipe spacers on 1" HS bolts passing through interior of box.
4. Direction of traffic indicated by ➡.

STATE OF CALIFORNIA
DEPARTMENT OF TRANSPORTATION

DOUBLE THRIE BEAM BARRIER CONNECTION TO CONCRETE BARRIER

NO SCALE

RSP A78I DATED JUNE 6, 2008 SUPERSEDES STANDARD PLAN A78I
DATED MAY 1, 2006 - PAGE 96 OF THE STANDARD PLANS BOOK DATED MAY 2006.

REVISED STANDARD PLAN RSP A78I

2006 REVISED STANDARD PLAN RSP A78I

5-1-08

DIST	COUNTY	ROUTE	POST MILES TOTAL PROJECT	SHEET NO.	TOTAL SHEETS
03	Yol	80	0.2/5.7	16	28

Randell D. Hiatt
REGISTERED CIVIL ENGINEER

June 6, 2008
PLANS APPROVAL DATE

REGISTERED PROFESSIONAL ENGINEER
Randell D. Hiatt
No. C50200
Exp. 6-30-09
CIVIL
STATE OF CALIFORNIA

The State of California or its officers or agents shall not be responsible for the accuracy or completeness of electronic copies of this plan sheet.

To accompany plans dated 4-19-10

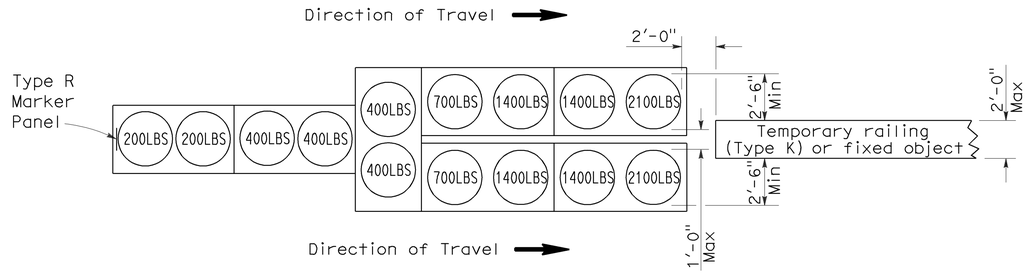

ARRAY 'TU14'

Approach speed 45 mph or more

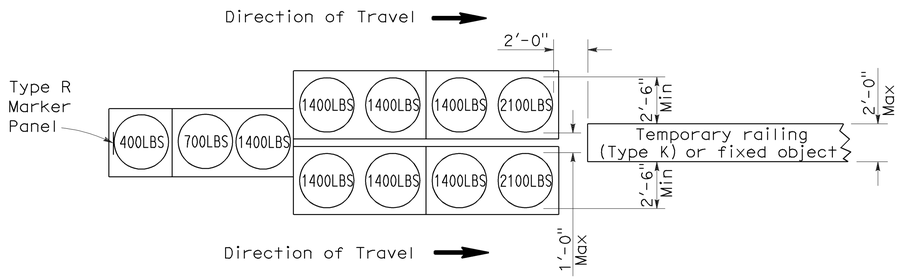

ARRAY 'TU11'

Approach speed less than 45 mph

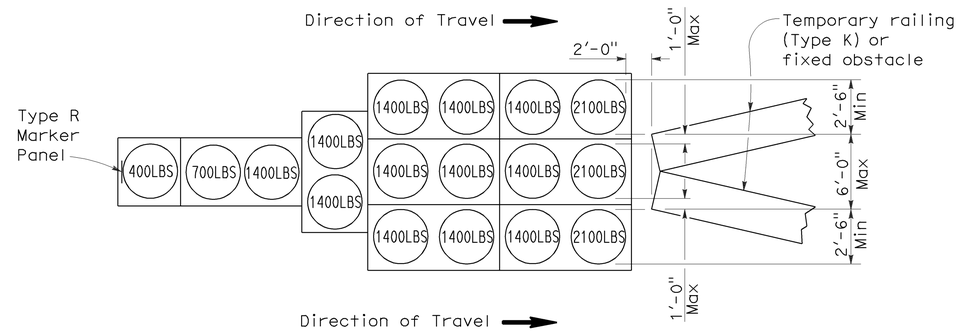

ARRAY 'TU17'

Approach speed less than 45 mph

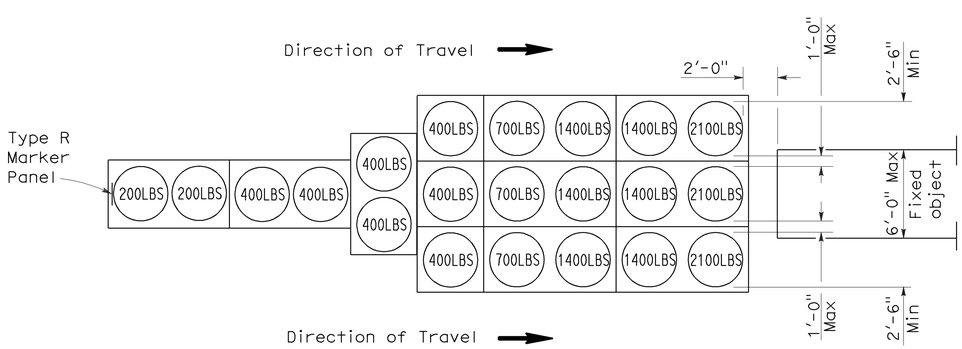

ARRAY 'TU21'

Approach speed 45 mph or more

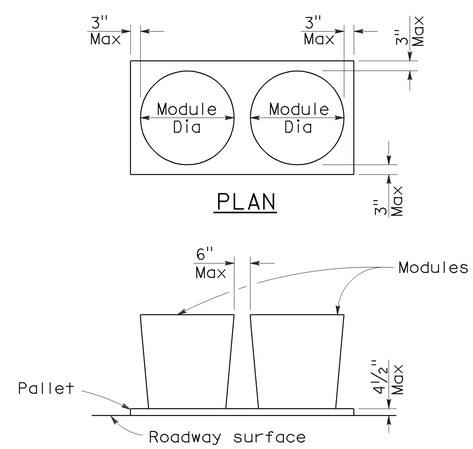

CRASH CUSHION PALLET DETAIL

See Note 7

NOTES:

1. (XXX) Indicates sand filled module location and weight of sand in pounds for each module. Module spacing is based on the greater diameter of the module.
2. All sand weights are nominal.
3. Temporary crash cushion arrays shall not encroach on the traveled way.
4. Place the top of Type R marker panel 1" below the module lid.
5. Refer to Standard Plan A73B for marker details.
6. Approach speeds indicated conform to NCHRP 350 Report criteria.
7. Use of pallets is optional.

STATE OF CALIFORNIA
DEPARTMENT OF TRANSPORTATION

TEMPORARY CRASH CUSHION, SAND FILLED (UNIDIRECTIONAL)

NO SCALE

RSP T1A DATED JUNE 6, 2008 SUPERSEDES STANDARD PLAN T1A
DATED MAY 1, 2006 - PAGE 211 OF THE STANDARD PLANS BOOK DATED MAY 2006.

REVISED STANDARD PLAN RSP T1A

2006 REVISED STANDARD PLAN RSP T1A

DIST	COUNTY	ROUTE	POST MILES TOTAL PROJECT	SHEET NO.	TOTAL SHEETS
03	Yol	80	0.2/5.7	17	28

Randell D. Hiatt
REGISTERED CIVIL ENGINEER

June 6, 2008
PLANS APPROVAL DATE

REGISTERED PROFESSIONAL ENGINEER
Randell D. Hiatt
No. C50200
Exp. 6-30-09
CIVIL
STATE OF CALIFORNIA

The State of California or its officers or agents shall not be responsible for the accuracy or completeness of electronic copies of this plan sheet.

To accompany plans dated 4-19-10

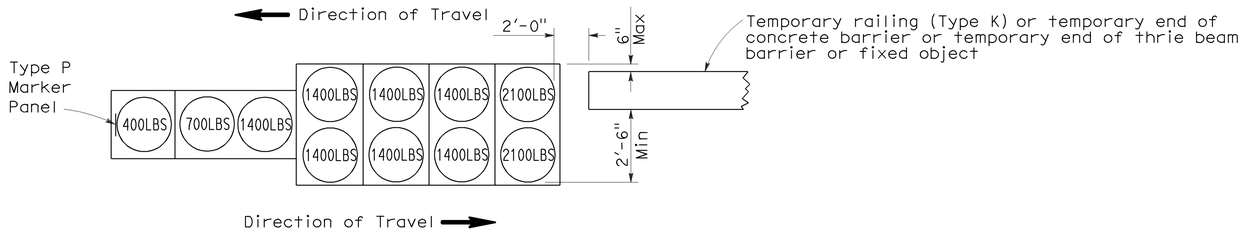

ARRAY 'TB11'

Approach speed less than 45 mph

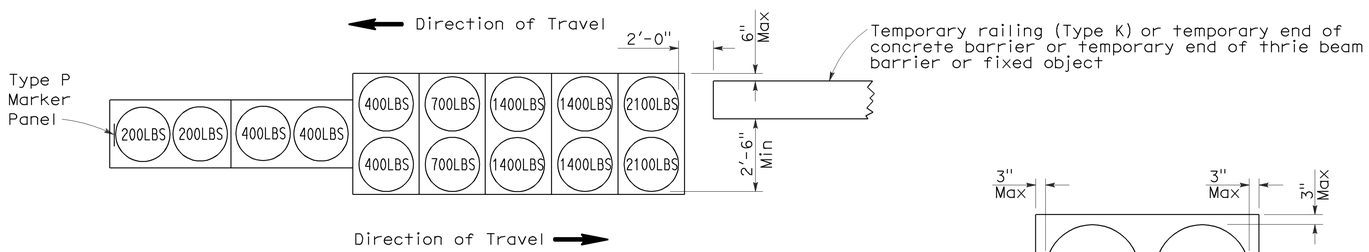

ARRAY 'TB14'

Approach speed 45 mph or more

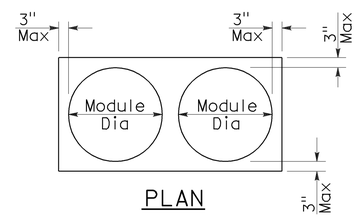

PLAN

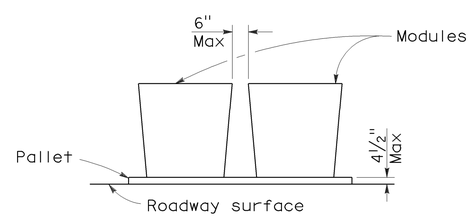

ELEVATION

CRASH CUSHION PALLET DETAIL

See Note 7

NOTES:

1. (XXX) Indicates sand filled module location and weight of sand in pounds for each module. Module spacing is based on the greater diameter of the module.
2. All sand weights are nominal.
3. Temporary crash cushion arrays shall not encroach on the traveled way.
4. Place the Type P marker panel so that the bottom of the panel rests upon the pallet.
5. Refer to Standard Plan A73B for marker details.
6. Approach speeds indicated conform to NCHRP 350 Report criteria.
7. Use of pallets is optional.

STATE OF CALIFORNIA
DEPARTMENT OF TRANSPORTATION

TEMPORARY CRASH CUSHION, SAND FILLED (BIDIRECTIONAL)

NO SCALE

RSP T1B DATED JUNE 6, 2008 SUPERSEDES STANDARD PLAN T1B
DATED MAY 1, 2006 - PAGE 212 OF THE STANDARD PLANS BOOK DATED MAY 2006.

REVISED STANDARD PLAN RSP T1B

2006 REVISED STANDARD PLAN RSP T1B

5-15-08

DIST	COUNTY	ROUTE	POST MILES TOTAL PROJECT	SHEET NO.	TOTAL SHEETS
03	Yol	80	0.2/5.7	18	28

Randell D. Hiatt
REGISTERED CIVIL ENGINEER

June 6, 2008
PLANS APPROVAL DATE

REGISTERED PROFESSIONAL ENGINEER
Randell D. Hiatt
No. C50200
Exp. 6-30-09
CIVIL
STATE OF CALIFORNIA

The State of California or its officers or agents shall not be responsible for the accuracy or completeness of electronic copies of this plan sheet.

To accompany plans dated 4-19-10

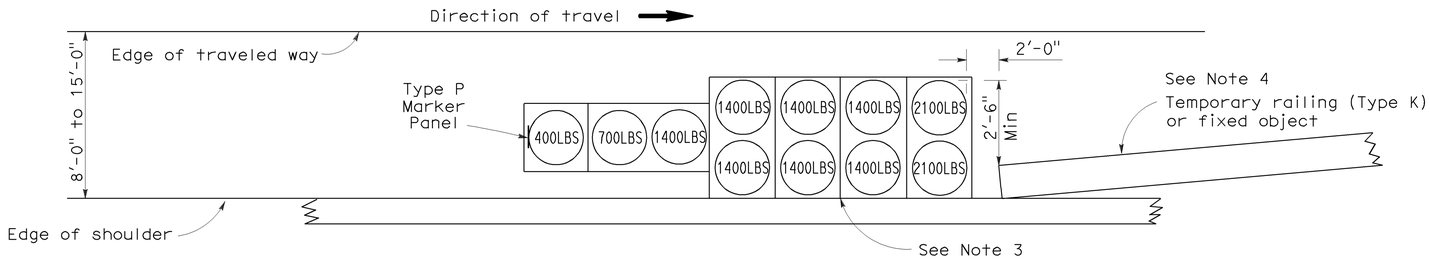

ARRAY 'TS11'

Approach speed less than 45 mph
See Note 9

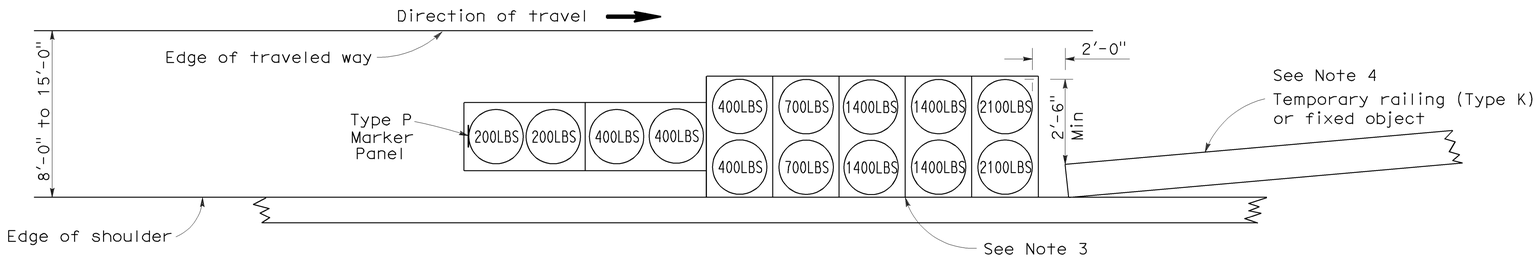

ARRAY 'TS14'

Approach speed 45 mph or more
See Note 9

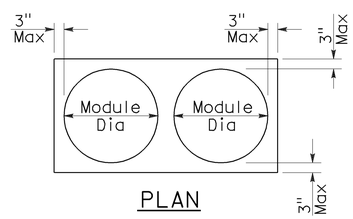

PLAN

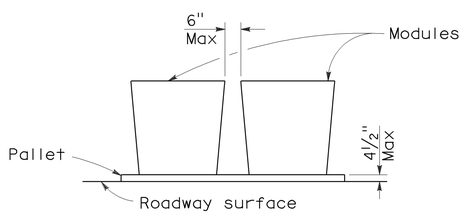

ELEVATION

CRASH CUSHION PALLET DETAIL

See Note 11

NOTES:

1. (XXX) Indicates sand filled module location and weight of sand in pounds for each module. Module spacing is based on the greater diameter of the module.
2. All sand weights are nominal.
3. The temporary crash cushion arrays shown on this plan shall be used only in locations where there will be traffic on one side of the temporary crash cushion array.
4. If the fixed object or approach end of the temporary railing is less than 15'-0" from the edge of traveled way, a temporary crash cushion is required in a construction or work zone.
5. Temporary crash cushion arrays shall not encroach on the traveled way.
6. Arrays for median shoulders shall conform to details shown on this plan for outside shoulders.
7. Place the Type P marker panel so that the bottom of the panel rests upon the pallet and faces traffic.
8. Refer to Standard Plan A73B for marker details.
9. For shoulder widths less than 8'-0", appropriate approved crash cushion protection, other than sand filled modules, shall be provided at fixed objects and at approach ends of temporary railing. The specific type of crash cushion shall be as shown on the project plans or as specified in the Special Provisions, or if not shown on the project plans or specified in the Special Provisions, shall be as approved by the Engineer.
10. Approach speeds indicated conform to NCHRP 350 Report criteria.
11. Use of pallets is optional.

STATE OF CALIFORNIA
DEPARTMENT OF TRANSPORTATION

TEMPORARY CRASH CUSHION, SAND FILLED (SHOULDER INSTALLATIONS)

NO SCALE

RSP T2 DATED JUNE 6, 2008 SUPERSEDES STANDARD PLAN T2
DATED MAY 1, 2006 - PAGE 213 OF THE STANDARD PLANS BOOK DATED MAY 2006.

REVISED STANDARD PLAN RSP T2

2006 REVISED STANDARD PLAN RSP T2

5-15-08

DIST	COUNTY	ROUTE	POST MILES TOTAL PROJECT	SHEET NO.	TOTAL SHEETS
03	Yol	80	0.2/5.7	19	28

REGISTERED CIVIL ENGINEER

November 17, 2006
PLANS APPROVAL DATE

REGISTERED PROFESSIONAL ENGINEER — Greg W. Edwards — No. C36386 — Exp. 6-30-08 — CIVIL — STATE OF CALIFORNIA

The State of California or its officers or agents shall not be responsible for the accuracy or completeness of electronic copies of this plan sheet.

To accompany plans dated 4-19-10

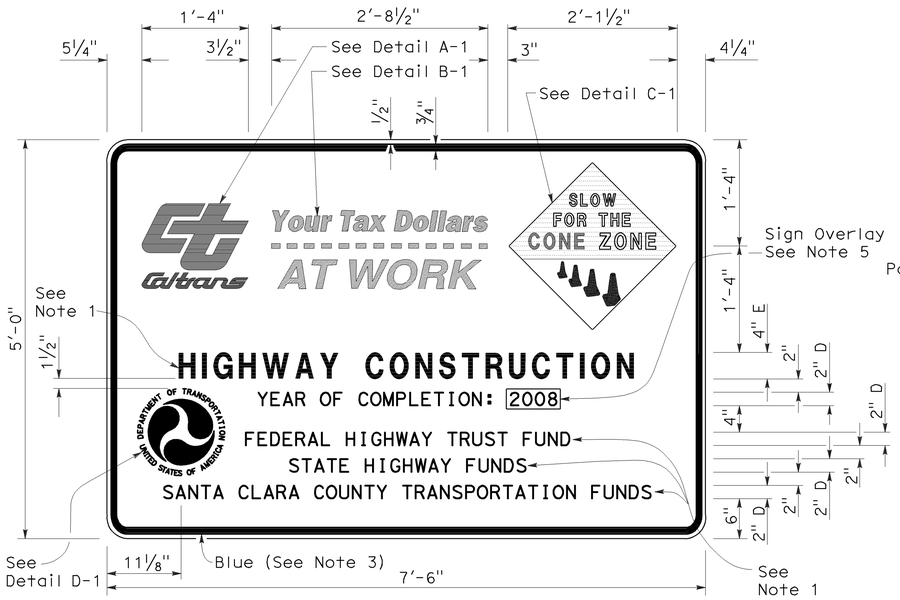

TYPE 1

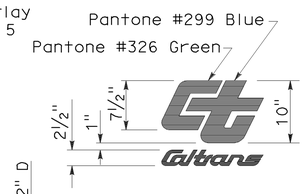

DETAIL A-1

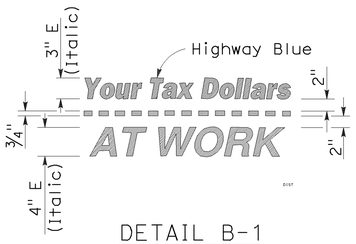

DETAIL B-1
(See Note 3)

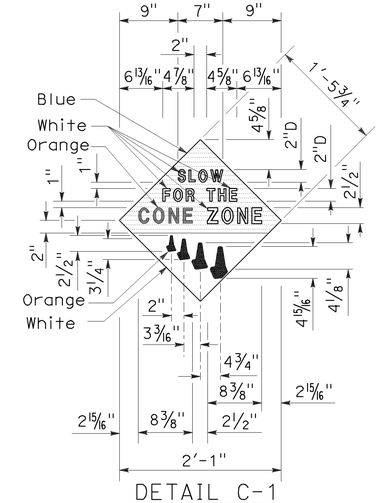

DETAIL C-1
(See Note 4)

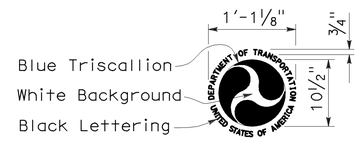

DETAIL D-1
(See Note 6)

NOTES:

1. The sign messages shown for type of project and fund types are examples only. See the Special Provisions for the applicable type of project and fund type messages to be used.
2. Except as otherwise shown, the legend of sign shall be black on a white background (non-reflective).
3. The border of the signs and details "B-1" and "B-2" shall be blue (non-reflective).
4. The diamond in details "C-1" and "C-2" shall be blue for the background of message, " SLOW FOR THE CONE ZONE", and white background for the orange cones. The color and type of font for the "SLOW FOR THE CONE ZONE" message shall be: "SLOW" white D; "FOR THE" white D; "CONE" orange Arial font; "ZONE" white Arial font.
5. Year of completion of project construction shown on the overlay is an example only. See the Special Provisions.
6. Use when the Project involves Federal Highway Trust Fund.

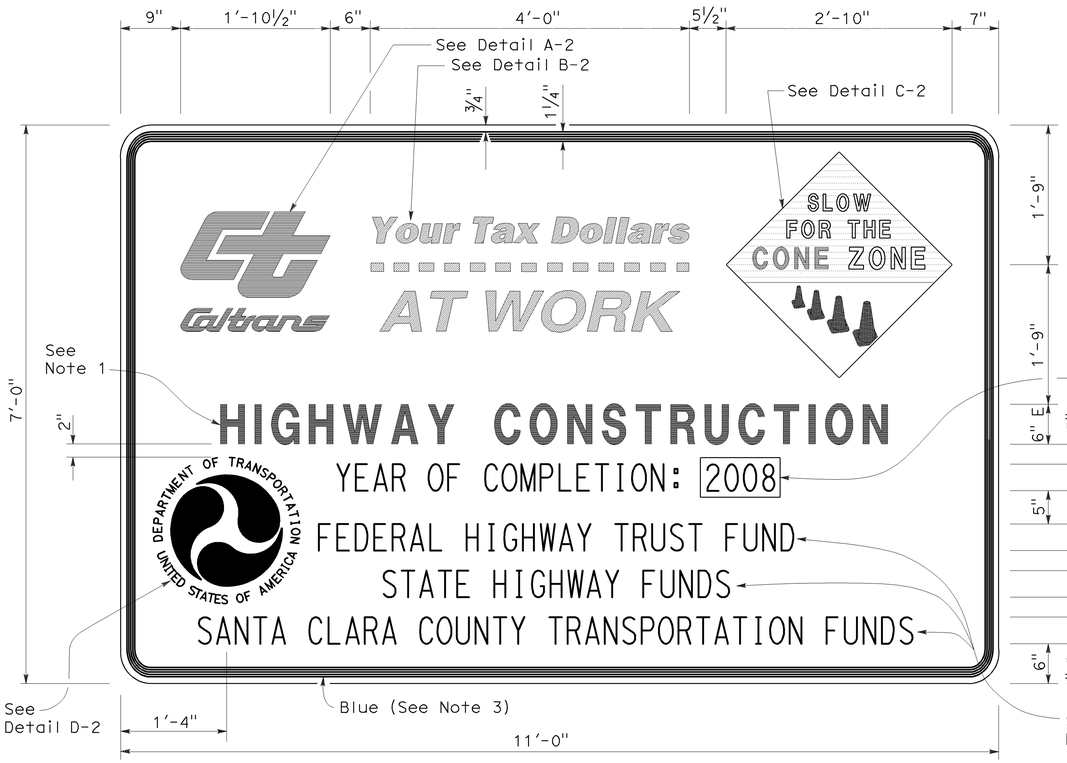

TYPE 2

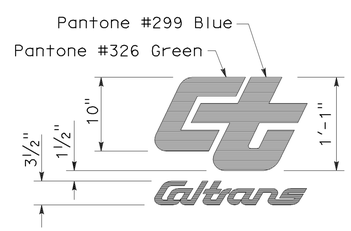

DETAIL A-2

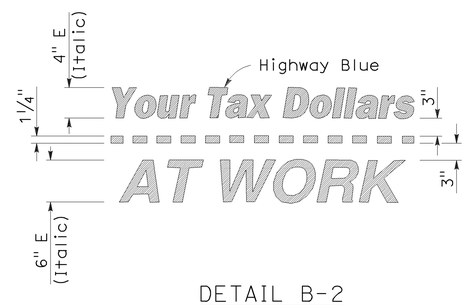

DETAIL B-2
(See Note 3)

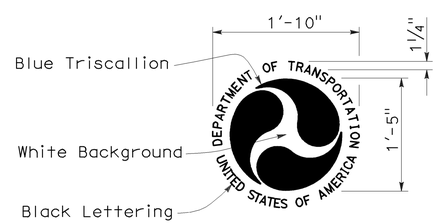

DETAIL D-2
(See Note 6)

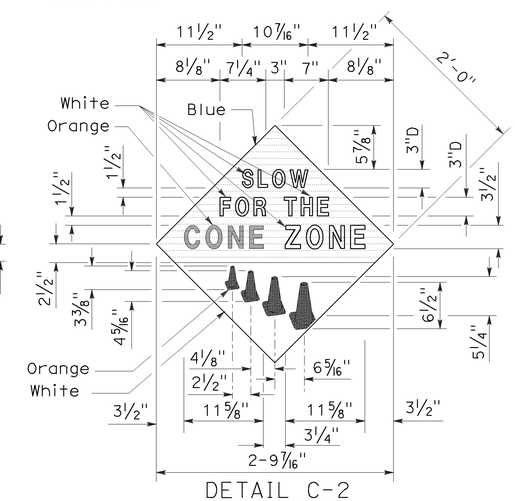

DETAIL C-2
(See Note 4)

STATE OF CALIFORNIA
DEPARTMENT OF TRANSPORTATION

CONSTRUCTION PROJECT FUNDING IDENTIFICATION SIGNS

NO SCALE

RSP T7 DATED NOVEMBER 17, 2006 SUPERSEDES STANDARD PLAN T7
DATED MAY 1, 2006 - PAGE 217 OF THE STANDARD PLANS BOOK DATED MAY 2006.

REVISED STANDARD PLAN RSP T7

2006 REVISED STANDARD PLAN RSP T7

9-7-06

DIST	COUNTY	ROUTE	POST MILES TOTAL PROJECT	SHEET NO.	TOTAL SHEETS
03	Yol	80	0.2/5.7	20	28

LICENSED LANDSCAPE ARCHITECT

April 3, 2009
PLANS APPROVAL DATE

The State of California or its officers or agents shall not be responsible for the accuracy or completeness of electronic copies of this plan sheet.

LICENSED LANDSCAPE ARCHITECT — Robert B. Schott — 3695 — 11-30-10 Renewal Date — 2-25-09 Date — STATE OF CALIFORNIA

To accompany plans dated 4-19-10

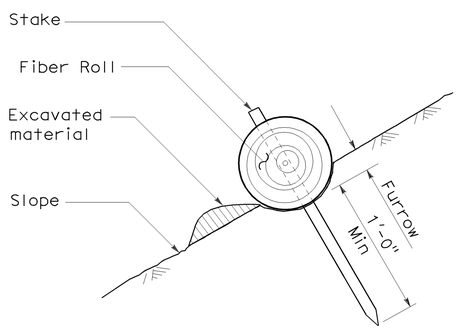

SECTION

TEMPORARY FIBER ROLL (TYPE 1)

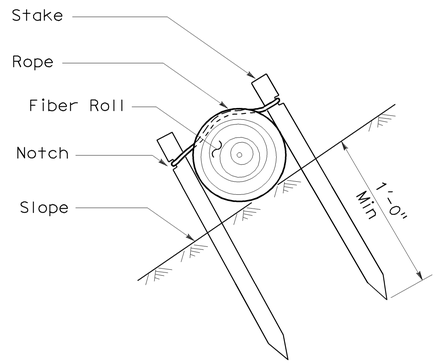

SECTION

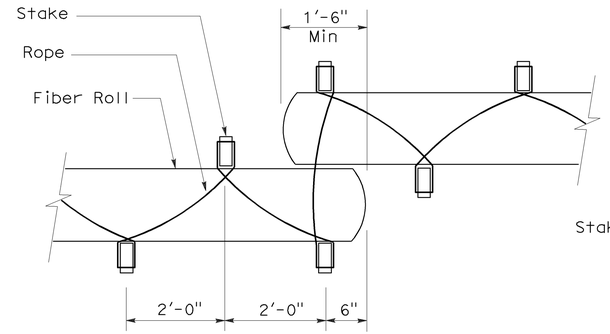

PLAN

TEMPORARY FIBER ROLL (TYPE 2)

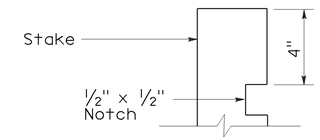

ELEVATION

STAKE NOTCH DETAIL

NOTES:

1. Temporary fiber roll spacing varies depending upon slope inclination.
2. Installations shown in the perspectives are for slope inclination of 10:1 and steeper.

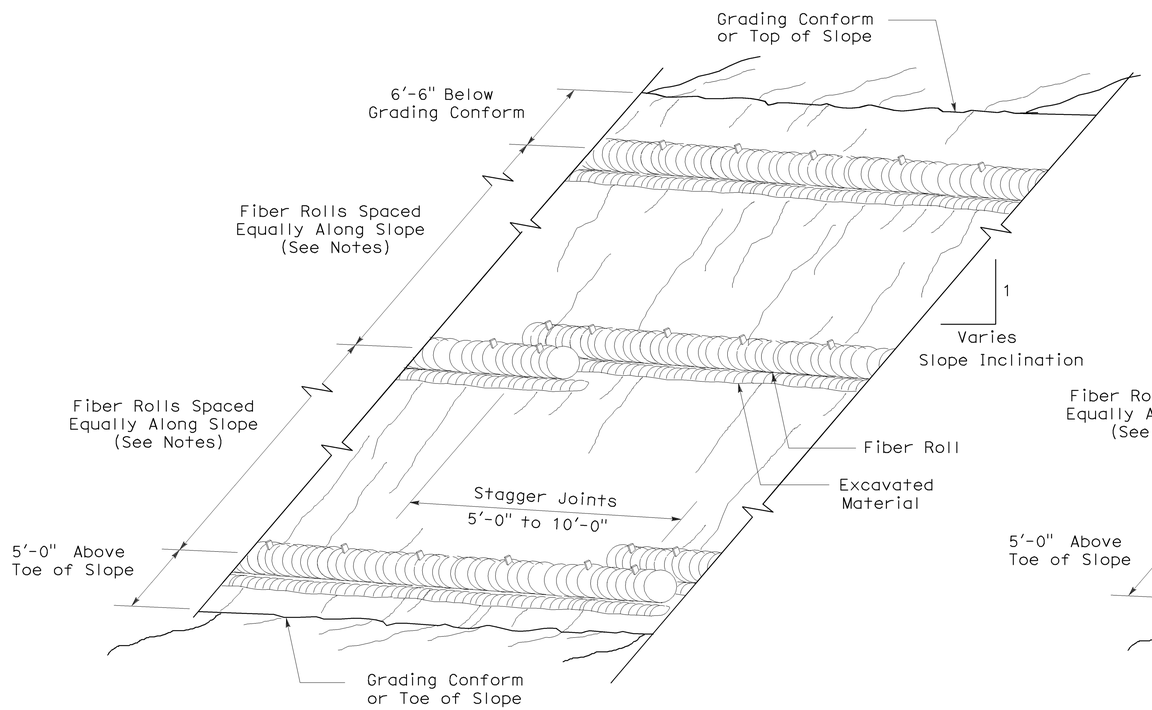

PERSPECTIVE

TEMPORARY FIBER ROLL (TYPE 1)

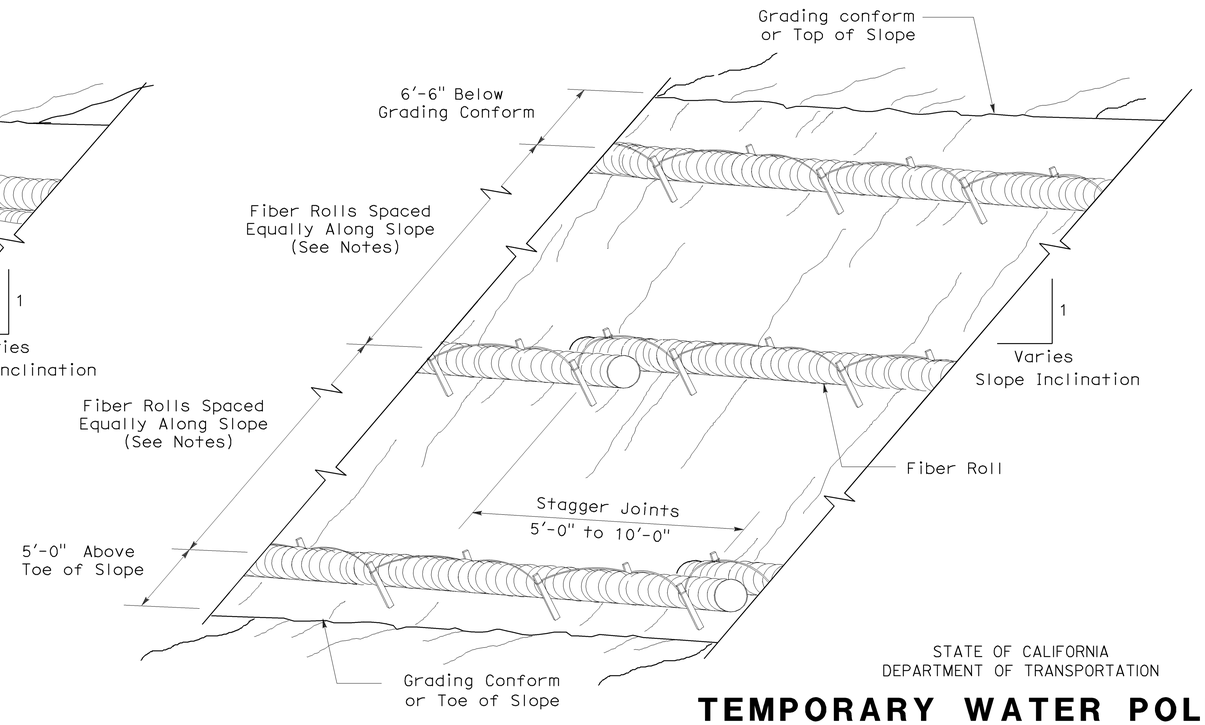

PERSPECTIVE

TEMPORARY FIBER ROLL (TYPE 2)

STATE OF CALIFORNIA
DEPARTMENT OF TRANSPORTATION

TEMPORARY WATER POLLUTION CONTROL DETAILS (TEMPORARY FIBER ROLL)

NO SCALE

RSP T56 DATED APRIL 3, 2009 SUPERSEDES STANDARD PLAN T56
DATED MAY 1, 2006 - PAGE 232 OF THE STANDARD PLANS BOOK DATED MAY 2006.

REVISED STANDARD PLAN RSP T56

2006 REVISED STANDARD PLAN RSP T56

2-23-09

DIST	COUNTY	ROUTE	POST MILES TOTAL PROJECT	SHEET NO.	TOTAL SHEETS
03	Yol	80	0.2/5.7	21	28

LICENSED LANDSCAPE ARCHITECT

August 15, 2008
PLANS Approval DATE

The State of California or its officers or agents shall not be responsible for the accuracy or completeness of electronic copies of this plan sheet.

LICENSED LANDSCAPE ARCHITECT Robert B. Schott 3635 Signature 11-04-08 Renewal Date 08-11-08 Date STATE OF CALIFORNIA

To accompany plans dated 4-19-10

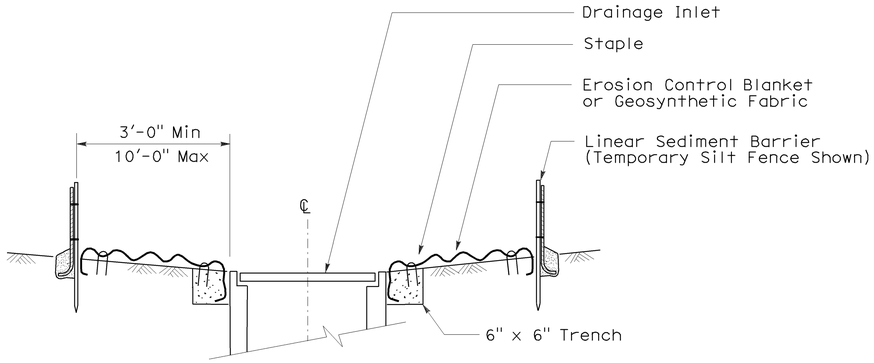

SECTION A-A

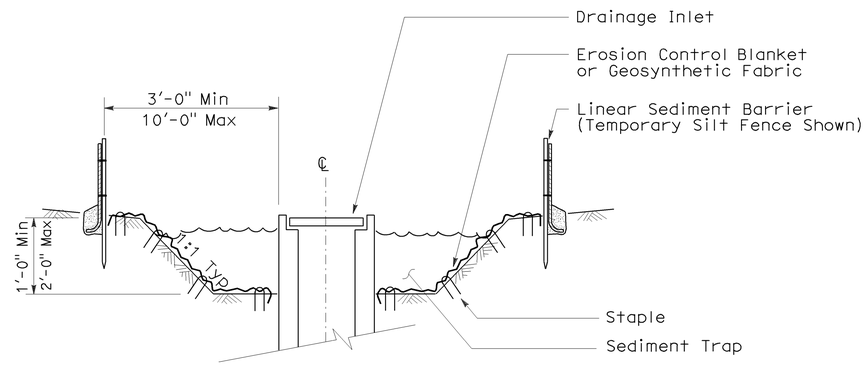

SECTION B-B

NOTES:

1. See Standard Plan T51 for Temporary Silt Fence.
2. Dimensions may vary to fit field conditions.

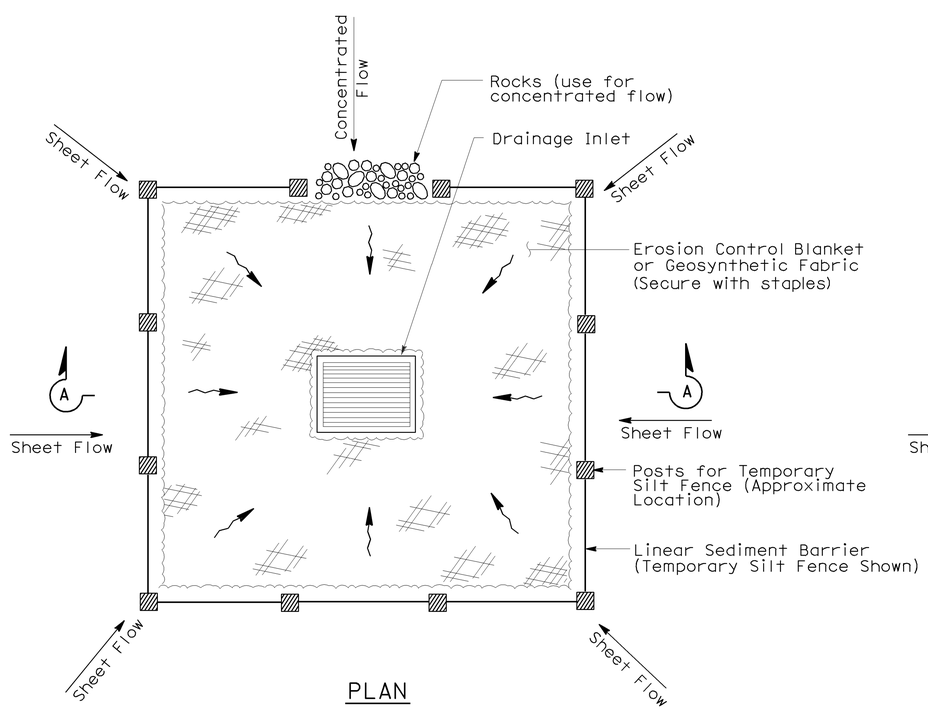

PLAN

TEMPORARY DRAINAGE INLET PROTECTION (TYPE 1)

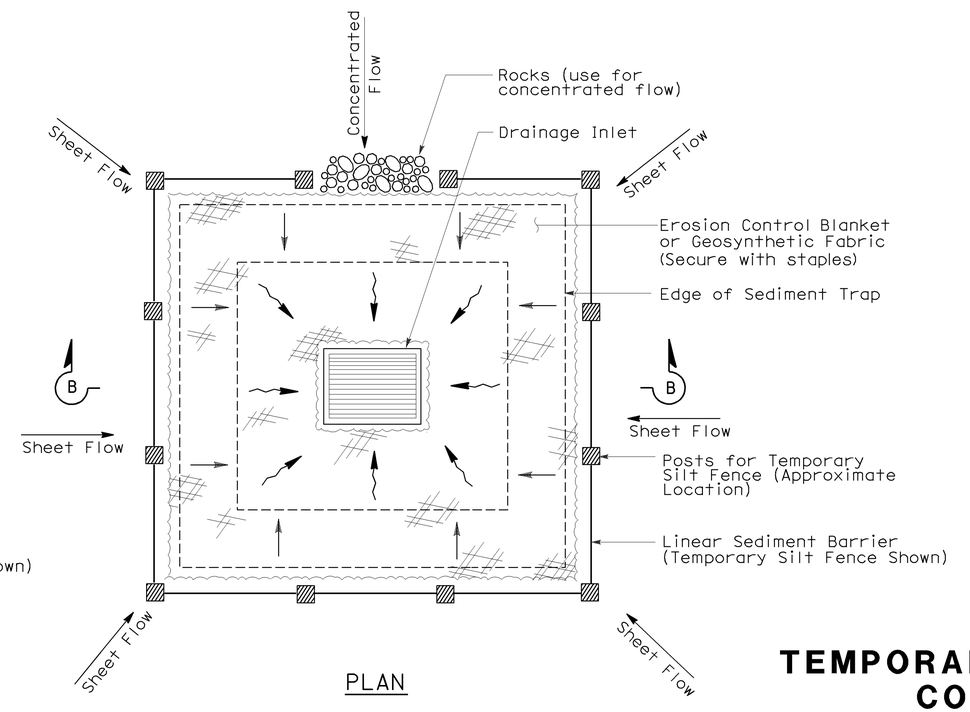

PLAN

TEMPORARY DRAINAGE INLET PROTECTION (TYPE 2) (EXCAVATED SEDIMENT TRAP)

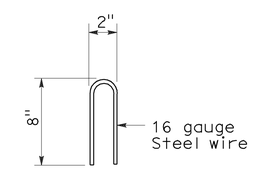

STAPLE DETAIL

STATE OF CALIFORNIA
DEPARTMENT OF TRANSPORTATION

TEMPORARY WATER POLLUTION CONTROL DETAILS (TEMPORARY DRAINAGE INLET PROTECTION)

NO SCALE

Nsp t61 dated august 15, 2008 supplements the standard plans book dated may 2006.

NEW STANDARD PLAN NSP T61

2006 NEW STANDARD PLAN NSP T61

7-11-08

DIST	COUNTY	ROUTE	POST MILES TOTAL PROJECT	SHEET NO.	TOTAL SHEETS
03	Yol	80	0.2/5.7	22	28

Robert B. Schott
LICENSED LANDSCAPE ARCHITECT

August 15, 2008
PLANS APPROVAL DATE

LICENSED LANDSCAPE ARCHITECT Robert B. Schott 3695 Signature 11-04-08 Renewal Date 08-11-08 Date STATE OF CALIFORNIA

The State of California or its officers or agents shall not be responsible for the accuracy or completeness of electronic copies of this plan sheet.

To accompany plans dated 4-19-10

2006 NEW STANDARD PLAN NSP T62

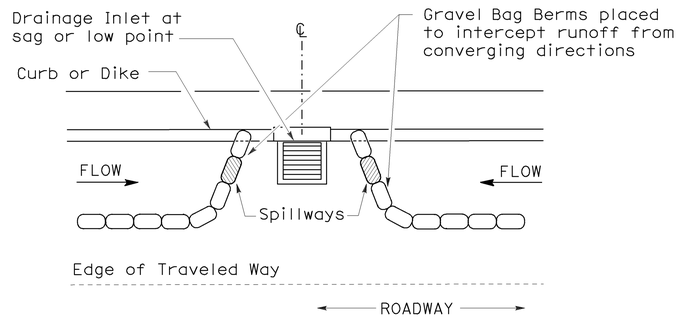

PLAN

CONFIGURATION FOR SAG POINT INLET (GRAVEL BAG BERM)

GRAVEL BAG BERM (TYPE 3A) SPACING TABLE

SLOPE OF ROADWAY (PERCENT)	1 to 3.9	4 to 5.9	6 to 7.9	8 to 10	10+
INTERVAL BETWEEN BERM	100′	75′	50′	25′	12′

For slope of less than 1%, install barriers only if erosion/sediment is prevalent

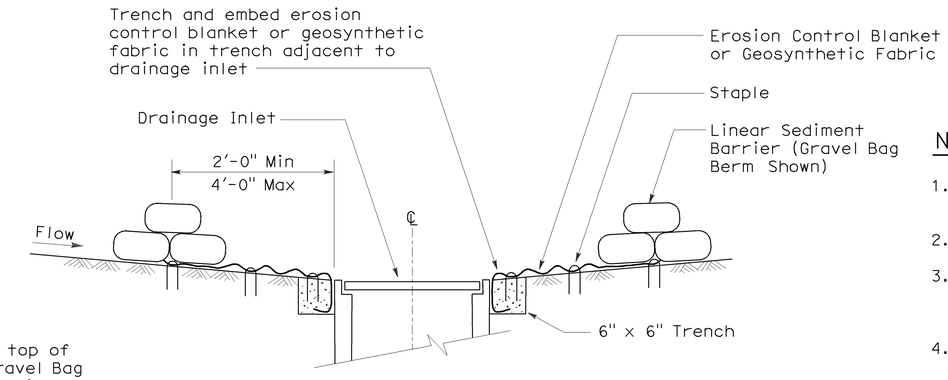

SECTION A-A

NOTES:

1. Place safety cones adjacent to drainage inlet protection.
2. Dimensions may vary to fit field conditions.
3. Install a minimum of 3 gravel bag berms upstream of each drainage inlet to be protected.
4. Position erosion control blanket or geosynthetic fabric at edge of concrete apron and secure in trench.
5. Erosion control blanket or geosynthetic fabric is not required if the area adjacent to the drainage inlet is vegetated or paved.

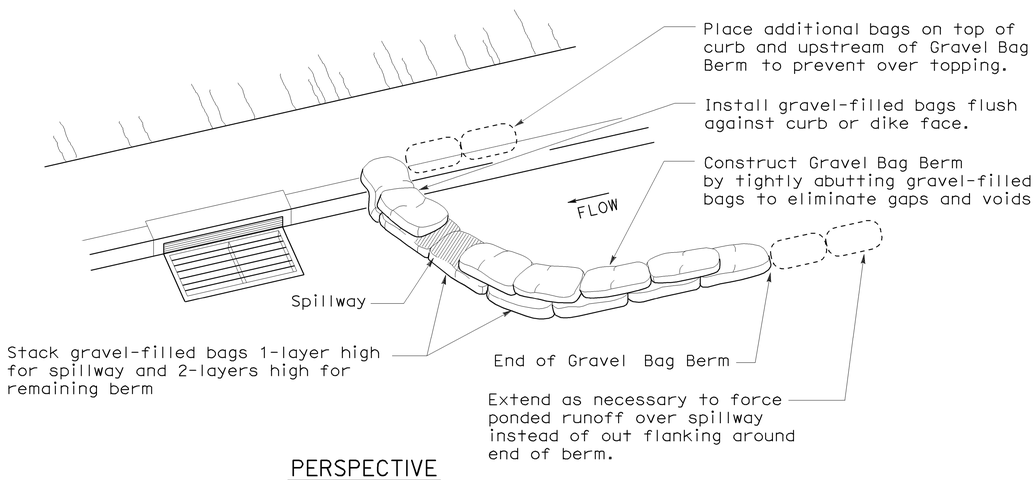

PERSPECTIVE

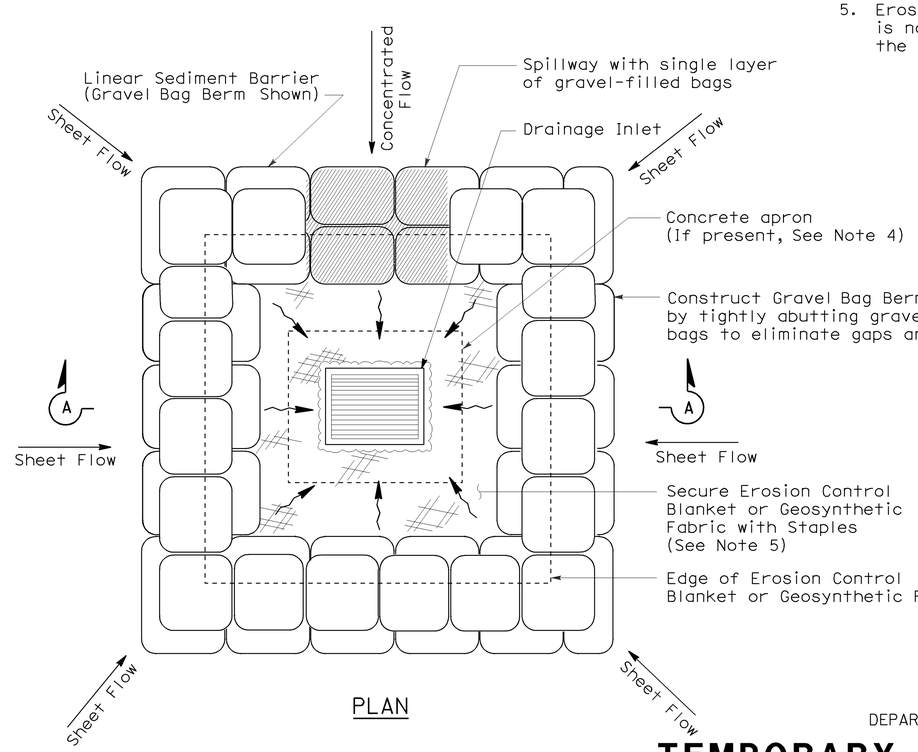

PLAN

TEMPORARY DRAINAGE INLET PROTECTION (TYPE 3B)

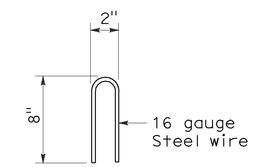

STAPLE DETAIL

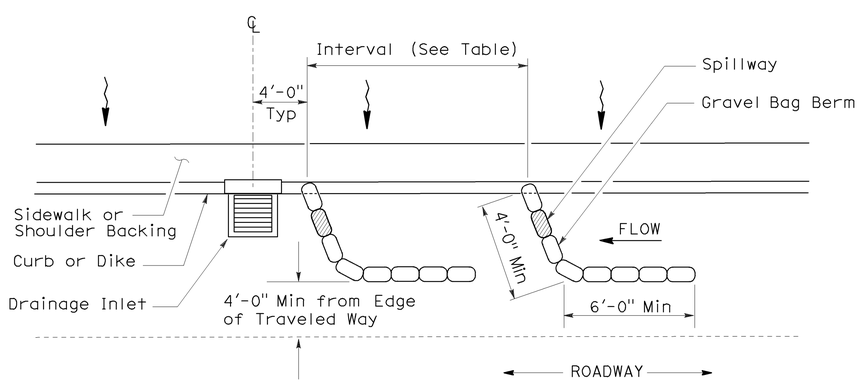

PLAN

TEMPORARY DRAINAGE INLET PROTECTION (TYPE 3A) (GRAVEL BAG BERM)

STATE OF CALIFORNIA
DEPARTMENT OF TRANSPORTATION

TEMPORARY WATER POLLUTION CONTROL DETAILS (TEMPORARY DRAINAGE INLET PROTECTION)

NO SCALE

NSP T62 DATED AUGUST 15, 2008 SUPPLEMENTS THE STANDARD PLANS BOOK DATED MAY 2006.

NEW STANDARD PLAN NSP T62

DIST	COUNTY	ROUTE	POST MILES TOTAL PROJECT	SHEET NO.	TOTAL SHEETS
03	Yol	80	0.2/5.7	23	28

Robert B Schott
LICENSED LANDSCAPE ARCHITECT

August 15, 2008
PLANS APPROVAL DATE

LICENSED LANDSCAPE ARCHITECT — Robert B. Schott — 3695 — Signature — 11-04-08 Renewal Date — 08-11-08 Date — STATE OF CALIFORNIA

The State of California or its officers or agents shall not be responsible for the accuracy or completeness of electronic copies of this plan sheet.

To accompany plans dated 4-19-10

FLEXIBLE SEDIMENT BARRIER SPACING TABLE

SLOPE OF ROADWAY (PERCENT)	0 to 0.9	1 to 1.9	2 to 2.9	3 to 4	5+
INTERVAL BETWEEN BARRIERS	50′	35′	30′	25′	20′
ANGLE FROM FACE OF CURB	70°	70°	70°	45°	45°
SUGGESTED BARRIER LENGTH	6′	6′	6′	6′	6′

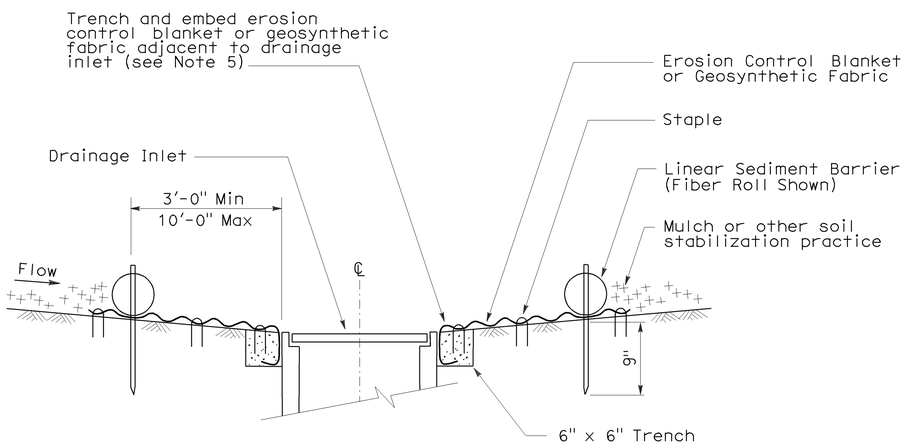

SECTION A-A

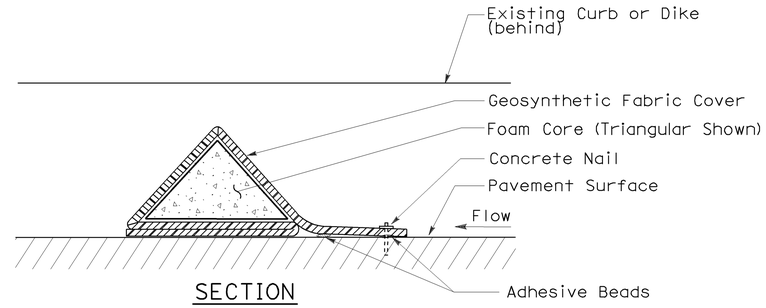

SECTION

FLEXIBLE SEDIMENT BARRIER DETAIL (FOAM BARRIER SHOWN)

NOTES:

1. See Standard Plan T51 for Temporary Silt Fence.
2. Dimensions may vary to fit field conditions.
3. Install a minimum of 3 flexible sediment barriers upstream of each drainage inlet to be protected.
4. Position erosion control blanket or geosynthetic fabric at edge of concrete apron and secure in trench.
5. Erosion control blanket or geosynthetic fabric is not required if the area adjacent to the drainage inlet is vegetated.

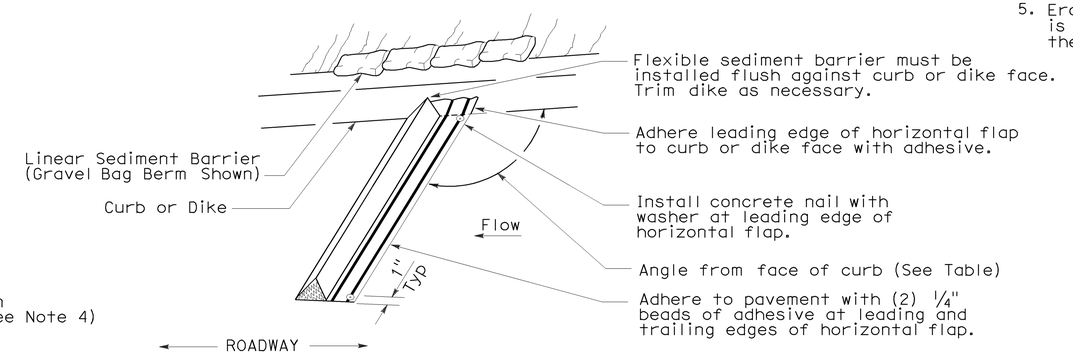

PERSPECTIVE

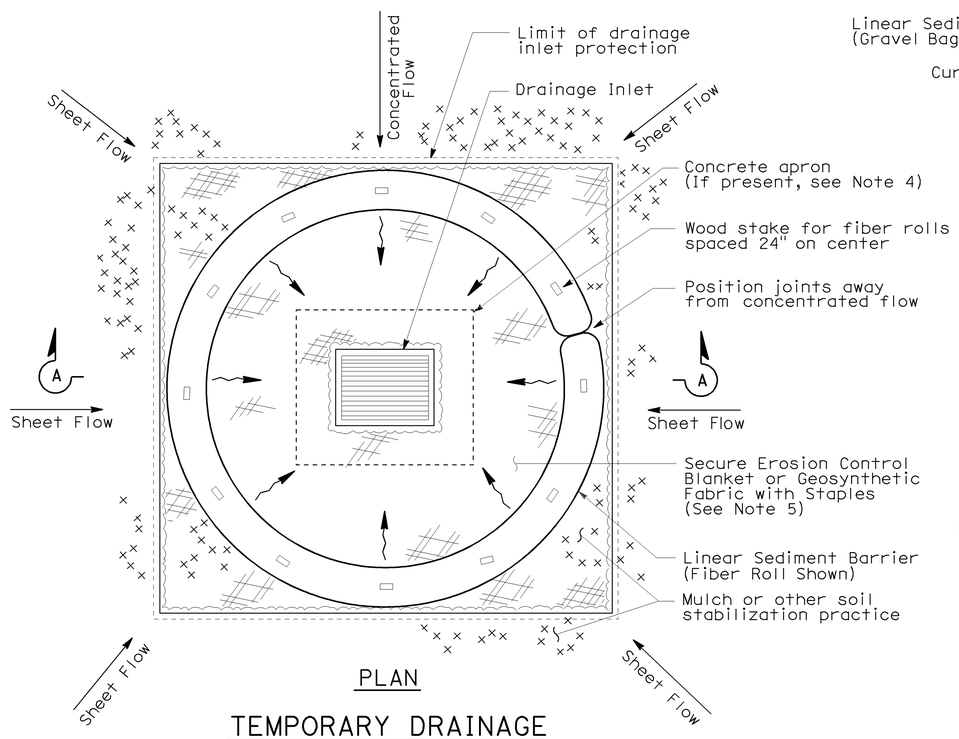

PLAN

TEMPORARY DRAINAGE INLET PROTECTION (TYPE 4A)

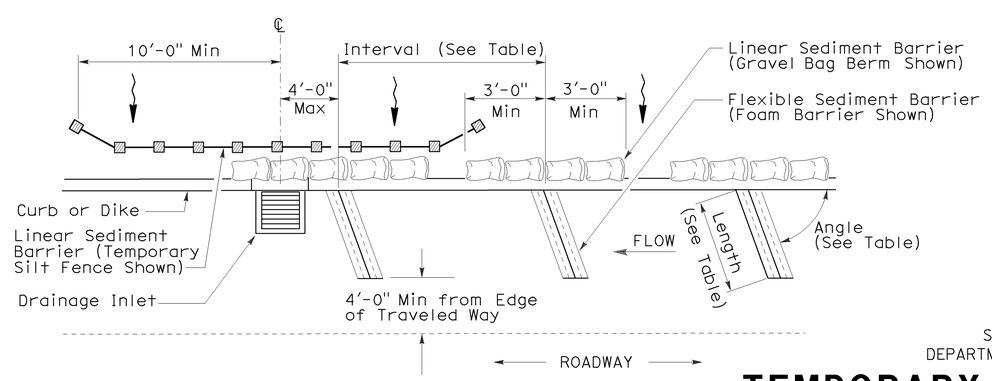

PLAN

TEMPORARY DRAINAGE INLET PROTECTION (TYPE 4B) FLEXIBLE SEDIMENT BARRIER

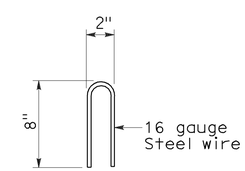

STAPLE DETAIL

STATE OF CALIFORNIA
DEPARTMENT OF TRANSPORTATION

TEMPORARY WATER POLLUTION CONTROL DETAILS (TEMPORARY DRAINAGE INLET PROTECTION)

NO SCALE

NSP T63 DATED AUGUST 15, 2008 SUPPLEMENTS THE STANDARD PLANS BOOK DATED MAY 2006.

NEW STANDARD PLAN NSP T63

2006 NEW STANDARD PLAN NSP T63

7-11-08

DIST	COUNTY	ROUTE	POST MILES TOTAL PROJECT	SHEET NO.	TOTAL SHEETS
03	Yol	80	0.2/5.7	24	28

LICENSED LANDSCAPE ARCHITECT

August 15, 2008
PLANS APPROVAL DATE

The State of California or its officers or agents shall not be responsible for the accuracy or completeness of electronic copies of this plan sheet.

LICENSED LANDSCAPE ARCHITECT Robert B. Schott 3635 Signature 11-04-08 Renewal Date 08-11-08 Date STATE OF CALIFORNIA

To accompany plans dated 4-19-10

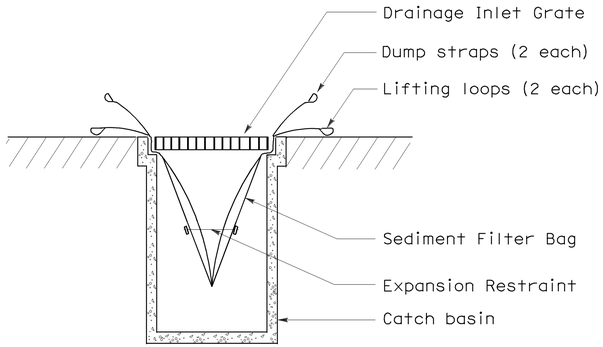

SECTION B-B

SEDIMENT FILTER BAG DETAIL

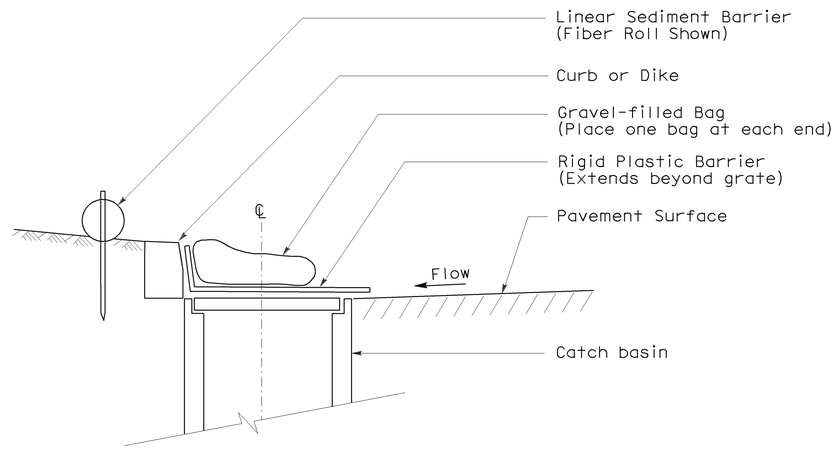

SECTION

TEMPORARY DRAINAGE INLET PROTECTION (TYPE 6A) (CATCH BASIN WITH GRATE)

NOTES:

1. See Standard Plan T51 for Temporary Silt Fence.
2. Dimensions may vary to fit field conditions.

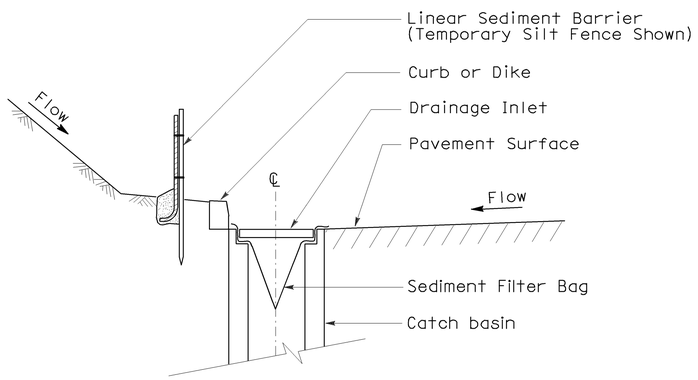

SECTION A-A

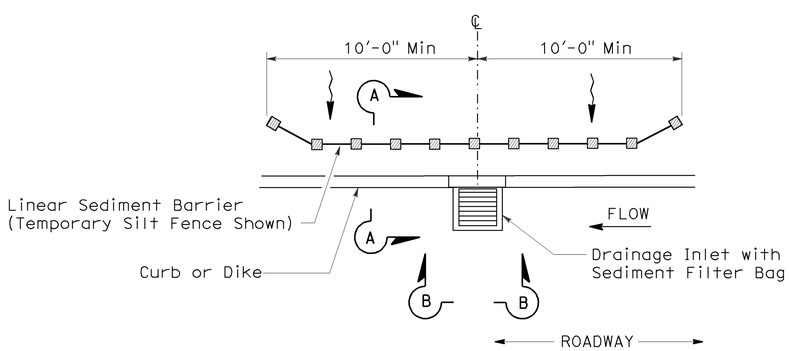

PLAN

TEMPORARY DRAINAGE INLET PROTECTION (TYPE 5) (SEDIMENT FILTER BAG)

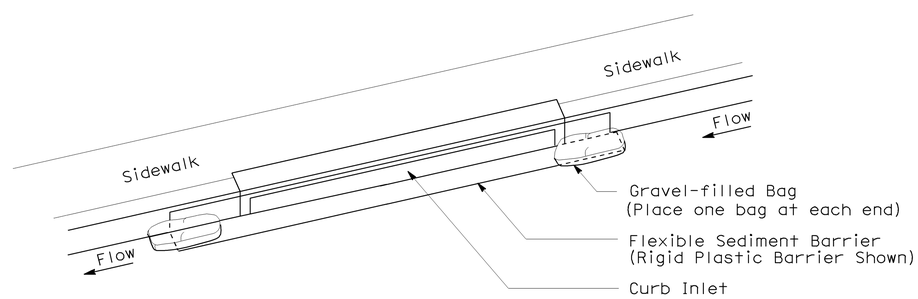

PERSPECTIVE

TEMPORARY DRAINAGE INLET PROTECTION (TYPE 6B) (CURB INLET WITHOUT GRATE)

STATE OF CALIFORNIA
DEPARTMENT OF TRANSPORTATION

TEMPORARY WATER POLLUTION CONTROL DETAILS (TEMPORARY DRAINAGE INLET PROTECTION)

NO SCALE

NSP T64 DATED AUGUST 15, 2008 SUPPLEMENTS THE STANDARD PLANS BOOK DATED MAY 2006.

NEW STANDARD PLAN NSP T64

2006 NEW STANDARD PLAN NSP T64

7-11-08

DIST	COUNTY	ROUTE	POST MILES TOTAL PROJECT	SHEET NO.	TOTAL SHEETS
03	Yol	80	0.2/5.7	25	28

REGISTERED ELECTRICAL ENGINEER

October 5, 2007
PLANS APPROVAL DATE

REGISTERED PROFESSIONAL ENGINEER
Jeffery G. McRae
No. E14512
Exp. 6-30-08
ELECTRICAL
STATE OF CALIFORNIA

The State of California or its officers or agents shall not be responsible for the accuracy or completeness of electronic copies of this plan sheet.

To accompany plans dated 4-19-10

ELECTROLIERS

STANDARD TYPES
15, 15D
15 STRUCTURE
21, 21D STRUCTURE
30
31
32
35
36-20A

High mast light pole

Double Arm lighting standard

Existing electrolier

Electrolier foundation (Future installation)

NOTES:

1. Luminaires shall be 310 W HPS when installed on Type 21, 21D, 30, 31, 32, 35 and 36-20A Standards, unless otherwise specified. Luminaires shall be 200 W HPS when installed on other type standards or poles, unless otherwise specified.
2. Luminaires shall be the cutoff type, ANSI Type Ⅲ medium cutoff lighting distribution, unless otherwise specified.
3. Variations noted adjacent to symbol on project plans.

Electrolier (see project notes or project plans)

Luminaire on wood pole

STANDARD NOTES:

- AB — Abandon. If applied to conduit, remove conductors.
- BC — Install pull box in existing conduit run.
- BP — Pedestrian barricade, type as indicated on plan.
- CB — Install conduit into existing pull box.
- CC — Connect new and existing conduit. Remove existing conductors and install conductors as indicated.
- CF — Conduit to remain for future use. Remove conductors. Install pull wire or rope.
- DH — Detector handhole.
- FA — Foundation to be abandoned.
- IS — Install sign on signal mast arm.
- NS — No slip base on standard.
- PEC — Photoelectric control.
- PEU — Photoelectric unit.
- RC — Equipment or material to be removed and become the property of the Contractor.
- RE — Remove electrolier, fuses and ballast. Tape ends of conductors.
- RL — Relocate equipment.
- RR — Remove and reuse equipment.
- RS — Remove and salvage equipment.
- SC — Splice new to existing conductors.
- SD — Service disconnect.
- SF — Standard to remain for future use. Remove luminaire, pole conductors, fuses and ballast.
- TSP — Telephone service point.

ABBREVIATIONS AND EQUIPMENT DESIGNATIONS

PROPOSED	EXISTING	
BBS	bbs	Battery backup system
BC	bc	Bolt circle
C	C	Conduit
CCTV	cctv	Closed circuit television
CKT	ckt	Circuit
CMS	cms	Changeable message sign
DLC	dlc	Loop detector lead-in cable
EMS	ems	Extinguishable message sign
EVC	evc	Emergency vehicle cable
EVD	evd	Emergency vehicle detector
FB	fb	Flashing beacon
FBCA	fbca	Flashing beacon control assembly
FBS	fbs	Flashing beacon with slip base
FO	fo	Fiber optic
G	G	Ground (Equipment Grounding Conductor)
GFCI	GFCI	Ground fault circuit interrupt
HAR	har	Highway advisory radio
HEX	hex	Hexagonal
HPS	hps	High pressure sodium
IISNS	iisns	Internally illuminated street name sign
ISL	isl	Induction sign lighting
LED	led	Light emitting diode
LMA	lma	Luminaire mast arm
LPS	lps	Low pressure sodium
LTG	ltg	Lighting
LUM	lum	Luminaire
MAT	mat	Mast arm mounting vehicle signal faces, top attachment
MAS	mas	Mast arm mounting vehicle signal faces, side attachment
MAS-4A	mas-4A	Mast arm mounting vehicle signal faces, side attachment - 4 signal section
MAS-4B	mas-4B	
MAS-4C	mas-4C	
MAS-5A	mas-5A	Mast arm mounting vehicle signal faces, side attachment - 5 signal section
MAS-5B	mas-5B	
MC	mc	Mercury contactor
M/M	m/m	Multiple to multiple transformer
MT	mt	Conduit with pull wire or rope only
MTG	mtg	Mounting
	mv	Mercury vapor lighting fixture
N	N	Neutral (Grounded Conductor)
NC	NC	Normally closed
NO	NO	Normally open
PB	pb	Pull box
PEC	pec	Photoelectric control (Type Ⅰ, Ⅱ, Ⅲ, Ⅳ or Ⅴ as shown)
PED	ped	Pedestrian
PEU	peu	Photoelectric unit
PPB	ppb	Pedestrian push button
RL		Relocated equipment
RM	rm	Ramp metering
SB	sb	Slip base
SIC	sic	Signal interconnect cable
SIG	sig	Signal
SMA	sma	Signal mast arm
SNS	sns	Street name sign
SP	sp	Service point
TDC	tdc	Telephone demarcation cabinet
TMS	tms	Traffic monitoring station
TOS	tos	Traffic Operations System
VEH	veh	Vehicle
XFMR	xfmr	Transformer
COMM	comm	Communication
RWIS	rwis	Roadway weather information system

SOFFIT AND WALL MOUNTED LUMINAIRES

Pendant, 70 W HPS unless otherwise specified.

Flush, 70 W HPS unless otherwise specified.

Wall surface, 70 W HPS unless otherwise specified.

Existing soffit or wall luminaire to remain unmodified.

Existing soffit or wall luminaire to be modified as specified.

NOTE:

Arrow indicates "street side" of luminaire.

STATE OF CALIFORNIA
DEPARTMENT OF TRANSPORTATION

ELECTRICAL SYSTEMS (SYMBOLS AND ABBREVIATIONS)

NO SCALE

RSP ES-1A DATED OCTOBER 5, 2007 SUPERSEDES STANDARD PLAN ES-1A DATED MAY 1, 2006 - PAGE 400 OF THE STANDARD PLANS BOOK DATED MAY 2006.

REVISED STANDARD PLAN RSP ES-1A

2006 REVISED STANDARD PLAN RSP ES-1A

DIST	COUNTY	ROUTE	POST MILES TOTAL PROJECT	SHEET NO.	TOTAL SHEETS
03	Yol	80	0.2/5.7	26	28

REGISTERED ELECTRICAL ENGINEER

October 5, 2007
PLANS APPROVAL DATE

REGISTERED PROFESSIONAL ENGINEER Jeffery G. McRae No. E14512 Exp. 6-30-08 ELECTRICAL STATE OF CALIFORNIA

The State of California or its officers or agents shall not be responsible for the accuracy or completeness of electronic copies of this plan sheet.

To accompany plans dated 4-19-10

CONDUIT

PROPOSED	EXISTING	
		Lighting Conduit, unless otherwise indicated or noted
		Traffic signal conduit
C	c	Communication conduit
T	t	Telephone conduit
F	f	Fire alarm conduit
FO	fo	Fiber optic conduit
		Conduit termination (RSP ES-9A C)
R	r	Conduit riser in/on structure or service pole

SERVICE EQUIPMENT

PROPOSED	EXISTING	
OH	oh	Overhead lines
U	U	Wood pole "U" indicates utility owned
		Pole guy with anchor
		Utility transformer - ground mounted
III		Service equipment enclosure type
		Service equipment enclosure door indicates front of enclosure
T	t	Telephone demarcation cabinet

POLE-MOUNTED SERVICE DESIGNATION

Type of installation

TYPE H SERVICE - 28'-10" ← Pole height above grade

ILLUMINATED OVERHEAD SIGN

PROPOSED	EXISTING	
		Overhead sign - Single post
		Overhead sign - Two post
		Overhead sign - Mounted on structure
		Overhead sign with electrolier

SIGNAL EQUIPMENT

PROPOSED	EXISTING	
		Pedestrian signal face
		Pedestrian push button post
		Pedestrian barricade
		Vehicle signal face (with backplate, 3-Section: red, yellow and green)
		Vehicle signal face with angle visors
PV	PV	Modifications of basic symbols: "L" indicates all non-arrow sections louvered "LG" indicates louvered green section only "PV" indicates 12" programmed visibility sections "8" indicates all 8" sections (only when specified)
		Type 15TS and Vehicle signal face
		Vehicle signal face with red, yellow and green left arrow sections
		Vehicle signal face with red and yellow sections and up green arrow
		Vehicle signal face (5 Section) with red, yellow and green sections and yellow and green right arrows
		Type 1 Standard and attached vehicle signal faces
		Standard with signal mast arm only and attached vehicle signal faces and internally illuminated street name sign
		Type 33 Standard, Left-turn vehicle signal face and sign
		Standard with luminaire and signal mast arms and attached vehicle signal faces
		Cantilever flashing beacon Type 9 Frame, with a sign unless otherwise specified or indicated
		Type 15-FBS Standard with two vehicle signal face sections with lens, backplate and visor with a sign
R	Y	Flashing beacon. One vehicle signal face section with lens, backplate and visor. "R" indicates red indication, "Y" indicates yellow indication
		Controller assembly. Door indicates front of cabinet

SIGNAL EQUIPMENT Cont

PROPOSED	EXISTING	
		Guard post
		Type 1 Standard with "Meter On" sign
		Emergency Vehicle detector

NOTES:

1. All signal sections shall be 12" unless shown otherwise.
2. Signal heads shall be provided with backplates unless shown otherwise.
3. Signal indication shall be LED.

STATE OF CALIFORNIA
DEPARTMENT OF TRANSPORTATION

ELECTRICAL SYSTEMS (SYMBOLS AND ABBREVIATIONS)

NO SCALE

RSP ES-1B DATED OCTOBER 5, 2007 SUPERCEDES STANDARD PLAN ES-1B DATED MAY 1, 2006 - PAGE 401 OF THE STANDARD PLANS BOOK DATED MAY 2006.

REVISED STANDARD PLAN RSP ES-1B

2006 REVISED STANDARD PLAN RSP ES-1B

7-10-07

DIST	COUNTY	ROUTE	POST MILES TOTAL PROJECT	SHEET NO.	TOTAL SHEETS
03	Yol	80	0.2/5.7	27	28

REGISTERED ELECTRICAL ENGINEER

October 5, 2007
PLANS APPROVAL DATE

REGISTERED PROFESSIONAL ENGINEER Jeffery G. McRae No. E14512 Exp. 6-30-08 ELECTRICAL STATE OF CALIFORNIA

The State of California or its officers or agents shall not be responsible for the accuracy or completeness of electronic copies of this plan sheet.

To accompany plans dated 4-19-10

EQUIPMENT IDENTIFICATION

ILLUMINATED SIGN IDENTIFICATION NUMBER:

Sign No. 12345 — Sign number - Place on post or structure

10 ISL SCI 1.0

- 1.0 — Transformer rating (kVA)
- SCI — Lighting control type
- ISL — Number and type of fixtures

Do NOT place on standard or structure

ELECTROLIER OR EQUIPMENT IDENTIFICATION NUMBER:

12345 - 15'-0"

- 15'-0" — Mast arm length, if shown. Do not place on standard or structure.
- 12345 — Equipment number - Place on standard or structure. Existing equipment numbers are shown in parenthesis

CONDUIT AND CONDUCTOR IDENTIFICATION:

1½"C, 2#10, 15#14, 2 DLC

- 2#10, 15#14, 2 DLC — Number and size of conductors and cables
- 1½"C — Size of conduit in inches

Ø1, Ø2, Ø2P, etc.	Traffic phase identification for signal faces, detectors and phase diagrams
1 2 3	Project note numbers
A B C	Equipment description, installation or item numbers
1 2 3	Conduit run numbers

SIGNAL AND LIGHTING STANDARD (TYPICAL DESIGNATION):

19A - 3 - 100

- 100 — Wind velocity = 100 mph
- 3 — Case 3 arm loading
- 19A — Standard type
- Standard Plan sheet number
- Detail number or letter

MISCELLANEOUS EQUIPMENT

PROPOSED	EXISTING	
CMS	cms	Changeable message sign
		Closed circuit television camera
		Highway advisory radio pole and antenna
EMS	ems	Extinguishable message sign
M V	m v	Detection device M = Microwave sensor V = Video image sensor

WIRING DIAGRAM LEGEND

P	Pole
CB	Circuit breaker
A	Ampere
V	Volt
M	Metered
UM	Unmetered
NB	Neutral bus
GB	Ground bus
G	Equipment grounding conductor
N	Grounded conductor (Neutral)

- External conductor
- Conductor or bus
- Tie point
- Contactor coil
- Contactor, Contact NO
- Terminal blocks
- Contactor, Contact NC
- Enclosure bond
- Grounding electrode
- Circuit breaker
- Receptacle

PULL BOXES

PROPOSED EXISTING

Pull box-No. 5 unless otherwise indicated or noted.

3 — 9A(21)

Pull box-Additional designations or descriptions

3	= No. 3½ pull box
5	= No. 5 pull box
6	= No. 6 pull box
7	= No. 7 (Ceiling pull box)
8	= No. 8 (Pendant soffit pull box)
9	= No. 9 pull box
9A	= No. 9A pull box

(C) = Communications pull box
(E) = Pull box with extension
(S) = Sprinkler control pull box
(21) = Anchor bolts and conduit for future installation of Type 21 Standard
(T) = Traffic pull box

VEHICLE DETECTORS

5 J 9 U

- U = Upper
- L = Lower
- 9 — Slot number in input file
- J — Input file (I or J)
- 5 — Phase

PROPOSED EXISTING

	Type A detector loop. Outline of sawcut shown.
	Type B detector loop. Outline of sawcut shown.
	Type C detector loop. Outline of sawcut shown.
	Type D detector loop. Outline of sawcut shown.
	Type E detector loop. Outline of sawcut shown.
	Type Q detector loop. Outline of sawcut shown.
	Magnetic detector
DH / dh	Detector handhole
	Microwave or video detection zone

STATE OF CALIFORNIA
DEPARTMENT OF TRANSPORTATION

ELECTRICAL SYSTEMS (SYMBOLS AND ABBREVIATIONS)

NO SCALE

RSP ES-1C DATED OCTOBER 5, 2007 SUPERCEDES STANDARD PLAN ES-1C DATED MAY 1, 2006 - PAGE 402 OF THE STANDARD PLANS BOOK DATED MAY 2006.

REVISED STANDARD PLAN RSP ES-1C

2006 REVISED STANDARD PLAN RSP ES-1C

DIST	COUNTY	ROUTE	POST MILES TOTAL PROJECT	SHEET NO.	TOTAL SHEETS
03	Yol	80	0.2/5.7	28	28

REGISTERED ELECTRICAL ENGINEER

October 5, 2007
PLANS APPROVAL DATE

REGISTERED PROFESSIONAL ENGINEER Jeffery G. McRae No. E14512 Exp. 6-30-08 ELECTRICAL STATE OF CALIFORNIA

The State of California or its officers or agents shall not be responsible for the accuracy or completeness of electronic copies of this plan sheet.

To accompany plans dated 4-19-10

2006 REVISED STANDARD PLAN RSP ES-5A

LOOP INSTALLATION PROCEDURE

1. Loops shall be centered in lanes.
2. Saw slots in pavement for loop conductors as shown in details.
3. Distance between side of loop and a lead-in saw cut from adjacent detectors shall be 2'-0" minimum. Distance between lead-in saw cuts shall be 6" minimum.
4. Bottom of saw slot shall be smooth with no sharp edges.
5. Slots shall be washed until clean, blown out and thoroughly dried before installing loop conductors.
6. Adjacent loops on the same sensor unit channel shall be wound in opposite directions.
7. Identify and tag loop circuit pairs in the pull box with loop number, start (S) and finish (F) of conductor. Identify and tag lead-in-cable with sensor number and phase.
8. Install loop conductor in slot using a 3/16" to 1/4" thick wood paddle. Hold loop conductors with wood paddles (at the bottom of the sawed slot) during sealant placement.
9. No more than 2 twisted pairs shall be installed in one sawed slot.
10. Allow additional 5'-0" of slack length of conductor for the lead-in run to pull box.
11. The additional length of each conductor for each loop shall be twisted together into a pair (6 turns per 3'-4" minimum) before being placed in the slot and conduit leading to pull box.
12. Test each loop circuit for continuity, circuit resistance and insulation resistance at the pull box before filling slots.
13. Fill slots as shown in details.
14. Splice loop conductors to lead-in-cable. Splices shall be soldered.
15. End of lead-in-cable and Type 2 loop conductor shall be waterproofed prior to installing in conduit to prevent moisture from entering the cable.
16. Lead-in-cable shall not be spliced between the pull box and the controller cabinet terminals.
17. Test each loop circuit for continuity, circuit resistance and insulation resistance at the controller cabinet location.
18. Where loop conductors are not to be spliced to a lead-in-cable, the ends of the conductors shall be taped and waterproofed with electrical insulating coating.

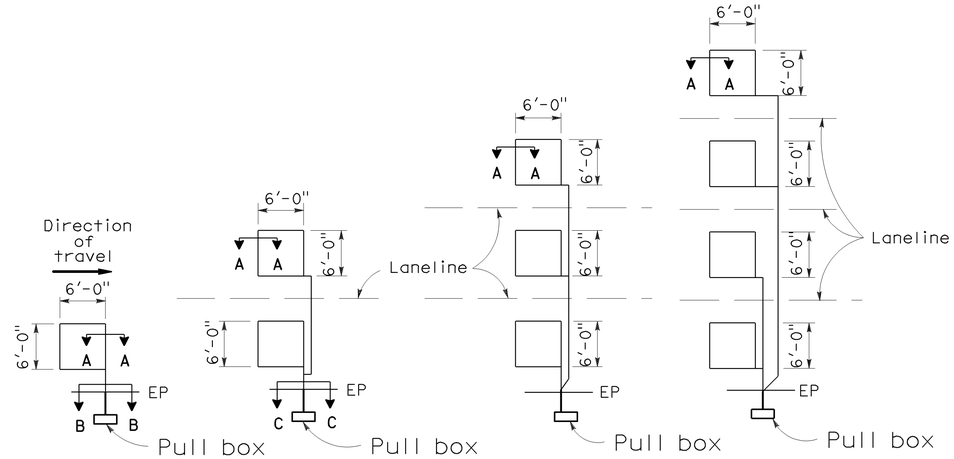

TYPE 1A INSTALLATION | TYPE 2A INSTALLATION | TYPE 3A INSTALLATION | TYPE 4A INSTALLATION

SAWCUT DETAILS

(Type A loop detector configurations illustrated)

1. 1A thru 4A = 1 Type A loop configuration in each lane.
2. 1B thru 4B = 1 Type B loop configuration in each lane.
3. 1C = 1 Type C loop configuration entering lanes as required.
4. 1D thru 4D = 1 Type D loop configuration in each lane.
5. 1E thru 4E = 1 Type E loop configuration in each lane.
6. 1Q thru 4Q = 1 Type Q loop configuration in each lane. (Use Type A, B, C, D, E or Q loop detector configurations only when specified or shown on plans)

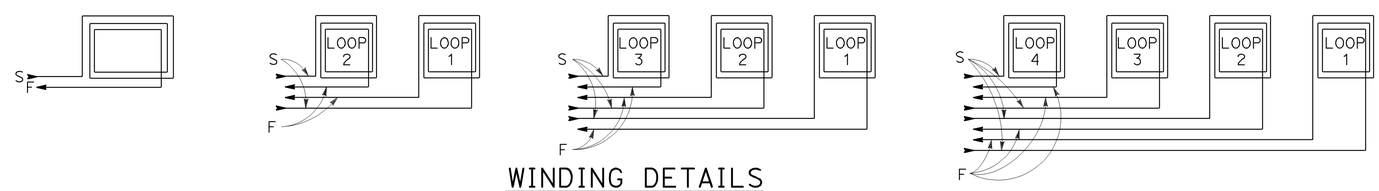

WINDING DETAILS

See Notes 6 and 7

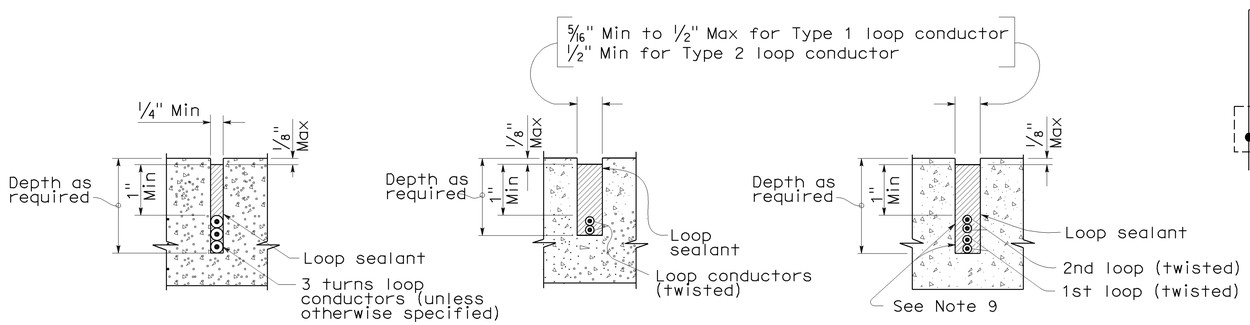

SECTION A-A | SECTION B-B | SECTION C-C

SLOT DETAILS - TYPE 1 AND TYPE 2 LOOP CONDUCTOR

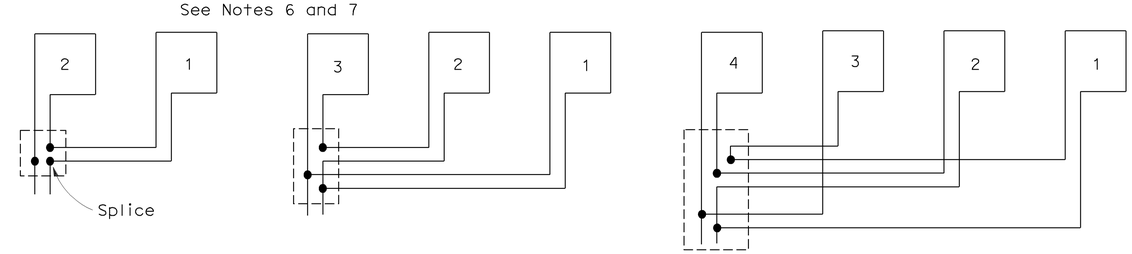

TYPICAL LOOP CONNECTIONS

(Dashed lines represent the pull box)

STATE OF CALIFORNIA
DEPARTMENT OF TRANSPORTATION

ELECTRICAL SYSTEMS (DETECTORS)

NO SCALE

RSP ES-5A DATED OCTOBER 5, 2007 SUPERCEDES STANDARD PLAN ES-5A DATED MAY 1, 2006 - PAGE 423 OF THE STANDARD PLANS BOOK DATED MAY 2006.

REVISED STANDARD PLAN RSP ES-5A

8-17-07