Dist	COUNTY	ROUTE	POST MILES TOTAL PROJECT	SHEET No.	TOTAL SHEETS
03	ED	50	R30.7/R31.7	1	119

STATE OF CALIFORNIA

DEPARTMENT OF TRANSPORTATION

ACBRNH-P050(133)E

PROJECT PLANS FOR CONSTRUCTION ON

STATE HIGHWAY

IN EL DORADO COUNTY
FROM 0.6 MILE WEST OF SLY PARK ROAD UNDERCROSSING
TO 0.4 MILE EAST OF SLY PARK ROAD UNDERCROSSING

TO BE SUPPLEMENTED BY STANDARD PLANS DATED 2010

INDEX OF PLANS

SHEET No.	DESCRIPTION
1	TITLE AND LOCATION MAP
2-6	TYPICAL CROSS SECTIONS
7-10	LAYOUTS
11	PROFILE AND SUPERELEVATION DIAGRAM
12-14	CONSTRUCTION DETAILS
15-20	DRAINAGE PLAN, PROFILE, DETAILS, QUANTITIES
21	UTILITY PLAN
22	CONSTRUCTION AREA SIGNS
23-42	STAGE CONSTRUCTION AND TRAFFIC HANDLING PLANS
43-48	PAVEMENT DELINEATION AND SIGN PLANS
49-57	SIGN DETAILS AND QUANTITIES
58-59	SUMMARY OF QUANTITES
60	EROSION CONTROL PLANS AND QUANTITIES
61-62	ELECTRICAL PLANS
63-92	REVISED STANDARD PLANS
STRUCTURE PLANS	
93-119	SLY PARK ROAD UNDERCROSSING

THE STANDARD PLANS LIST APPLICABLE TO THIS CONTRACT IS INCLUDED IN THE NOTICE TO BIDDERS AND SPECIAL PROVISIONS BOOK.

LOCATION MAP

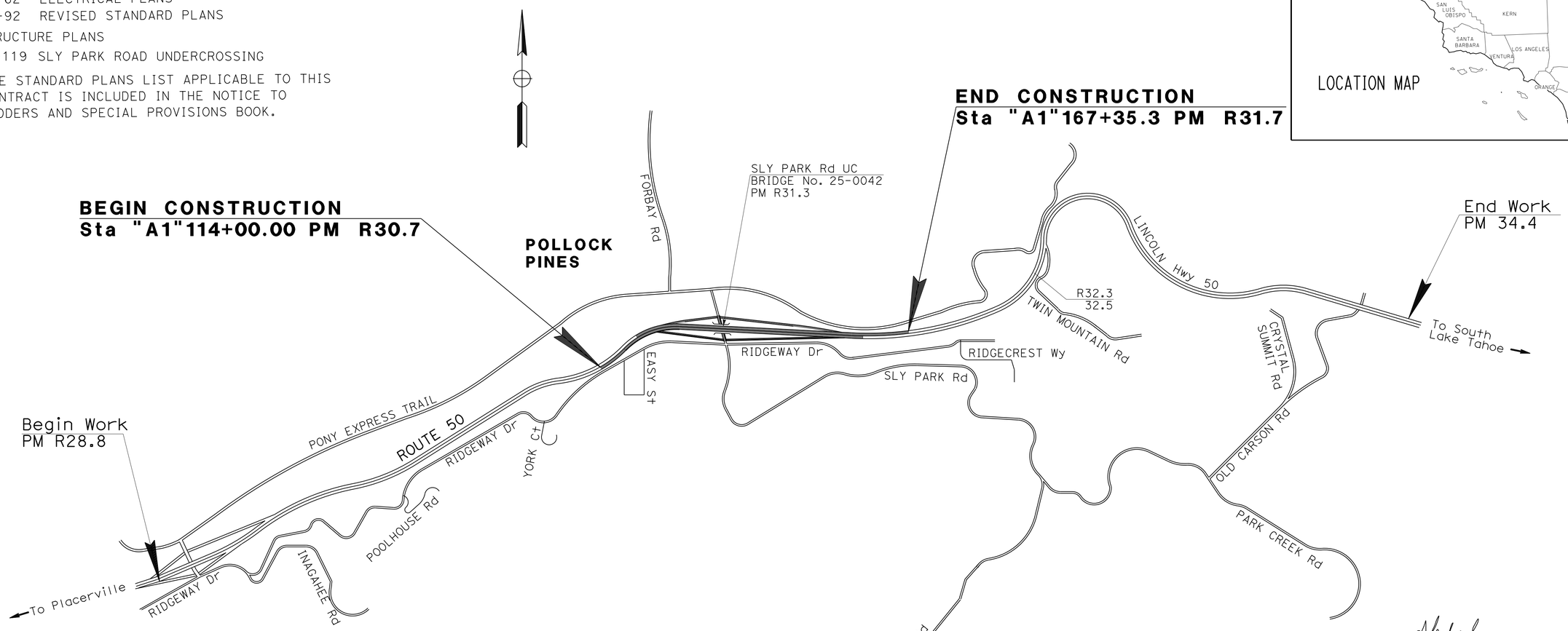

NO SCALE

PROJECT ENGINEER
REGISTERED CIVIL ENGINEER

8-19-13
DATE

August 19, 2013
PLANS APPROVAL DATE

REGISTERED PROFESSIONAL ENGINEER
N. SELWAL
No. 74816
Exp. 12-31-13
CIVIL
STATE OF CALIFORNIA

THE STATE OF CALIFORNIA OR ITS OFFICERS OR AGENTS SHALL NOT BE RESPONSIBLE FOR THE ACCURACY OR COMPLETENESS OF SCANNED COPIES OF THIS PLAN SHEET.

THE CONTRACTOR SHALL POSSESS THE CLASS (OR CLASSES) OF LICENSE AS SPECIFIED IN THE "NOTICE TO BIDDERS."

CONTRACT No.	03-0F2204
PROJECT ID	0300000072

PROJECT MANAGER: JOHN HOLDER
DESIGN ENGINEER: NESAR FORMOLI

LAST REVISION 00-00-00
DATE PLOTTED => 23-OCT-2013
TIME PLOTTED => 10:11

Dist	COUNTY	ROUTE	POST MILES TOTAL PROJECT	SHEET No.	TOTAL SHEETS
03	ED	50	R30.7/R31.7	2	119

REGISTERED CIVIL ENGINEER 8-19-13 DATE

8-19-13
PLANS APPROVAL DATE

REGISTERED PROFESSIONAL ENGINEER N. SELWAL No. 74816 Exp. 12-31-13 CIVIL STATE OF CALIFORNIA

THE STATE OF CALIFORNIA OR ITS OFFICERS OR AGENTS SHALL NOT BE RESPONSIBLE FOR THE ACCURACY OR COMPLETENESS OF SCANNED COPIES OF THIS PLAN SHEET.

NOTES:

1. DIMENSIONS OF THE PAVEMENT STRUCTURES (STRUCTURAL SECTIONS) ARE SUBJECT TO TOLERANCES SPECIFIED IN THE STANDARD SPECIFICATIONS.
2. SUPERELEVATIONS ARE SHOWN ON THE SUPERELEVATION DIAGRAM.
3. FOR EXACT LOCATION AND TYPE OF DIKE AND CONCRETE CURB, SEE LAYOUT SHEETS.
4. FOR RUMBLE STRIP LOCATION AND QUANTITY SEE LAYOUT AND SUMMARY OF QUANTITY SHEET.
5. SEE LAYOUT SHEETS FOR COLD PLANE AC Pvmt AT GORE AREAS.

PAVEMENT CLIMATE REGION

LOW MOUNTAIN

ABBREVIATIONS:

SCL - SAW CUT LINE
ESW - EDGE OF SIDEWALK
MGS - MIDWEST GUARDRAIL SYSTEM
HMA-A - HMA (TYPE A)

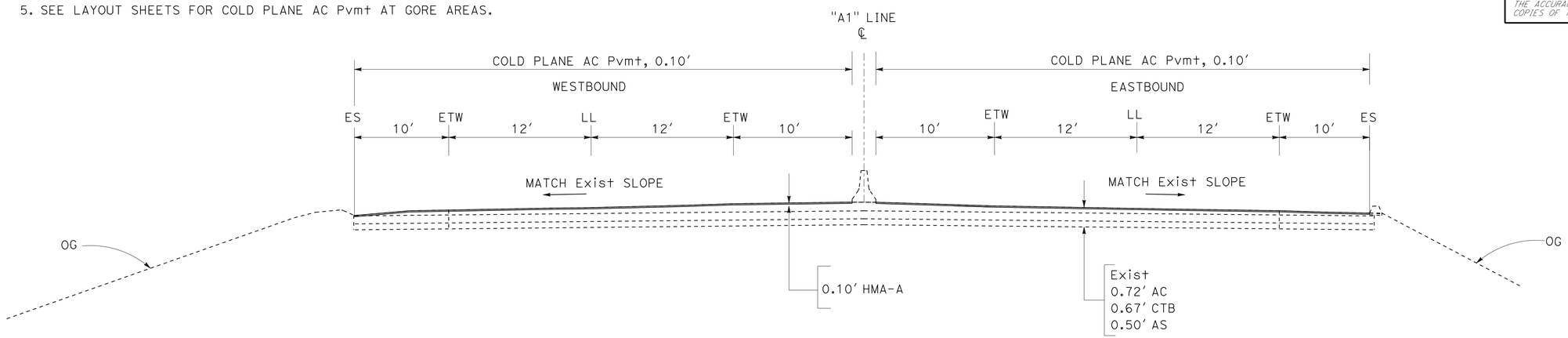

"A1" 130+22.00 TO 132+00.00

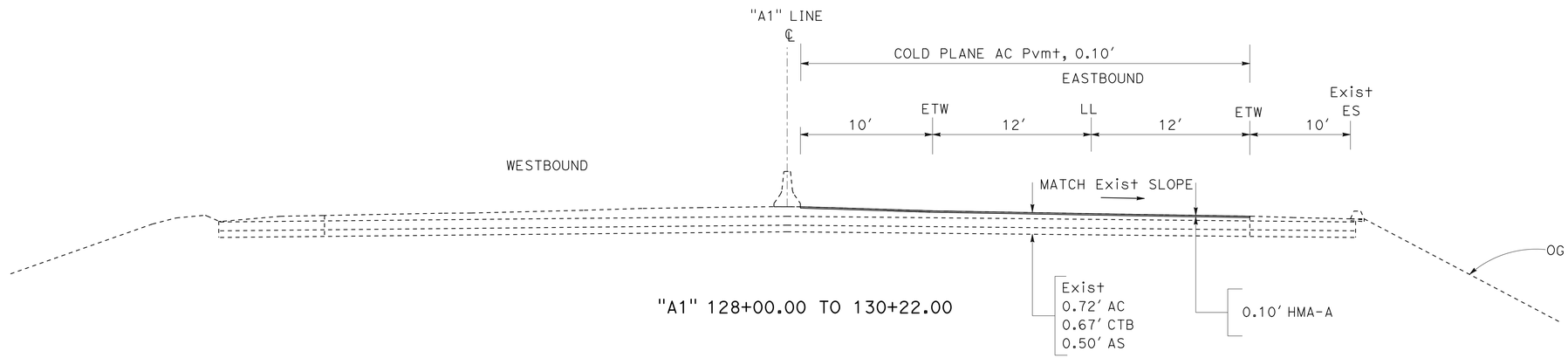

"A1" 128+00.00 TO 130+22.00

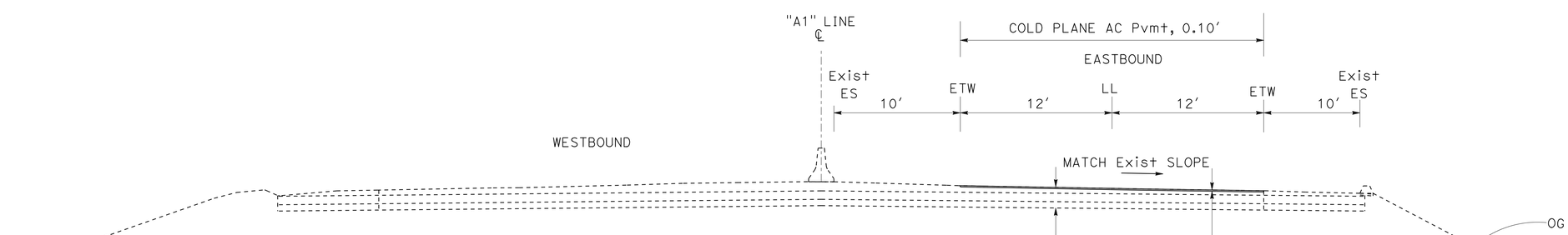

"A1" 114+00.00 TO 128+00.00

TYPICAL CROSS SECTIONS

NO SCALE

X-1

ROUTE 50

STATE OF CALIFORNIA - DEPARTMENT OF TRANSPORTATION
Caltrans
NORTH REGION
DIVISION OF ENGINEERING

FUNCTIONAL SUPERVISOR: NESAR FORMOLI
CALCULATED-DESIGNED BY: WESLEY LEE
CHECKED BY: NARAYAN SELWAL
REVISED BY
DATE REVISED

LAST REVISION 00-00-00
DATE PLOTTED => 23-OCT-2013
TIME PLOTTED => 10:11

Dist	COUNTY	ROUTE	POST MILES TOTAL PROJECT	SHEET No.	TOTAL SHEETS
03	ED	50	R30.7/R31.7	3	119

REGISTERED CIVIL ENGINEER 8-19-13 DATE

8-19-13
PLANS APPROVAL DATE

REGISTERED PROFESSIONAL ENGINEER
N. SELWAL
No. 74816
Exp. 12-31-13
CIVIL
STATE OF CALIFORNIA

THE STATE OF CALIFORNIA OR ITS OFFICERS OR AGENTS SHALL NOT BE RESPONSIBLE FOR THE ACCURACY OR COMPLETENESS OF SCANNED COPIES OF THIS PLAN SHEET.

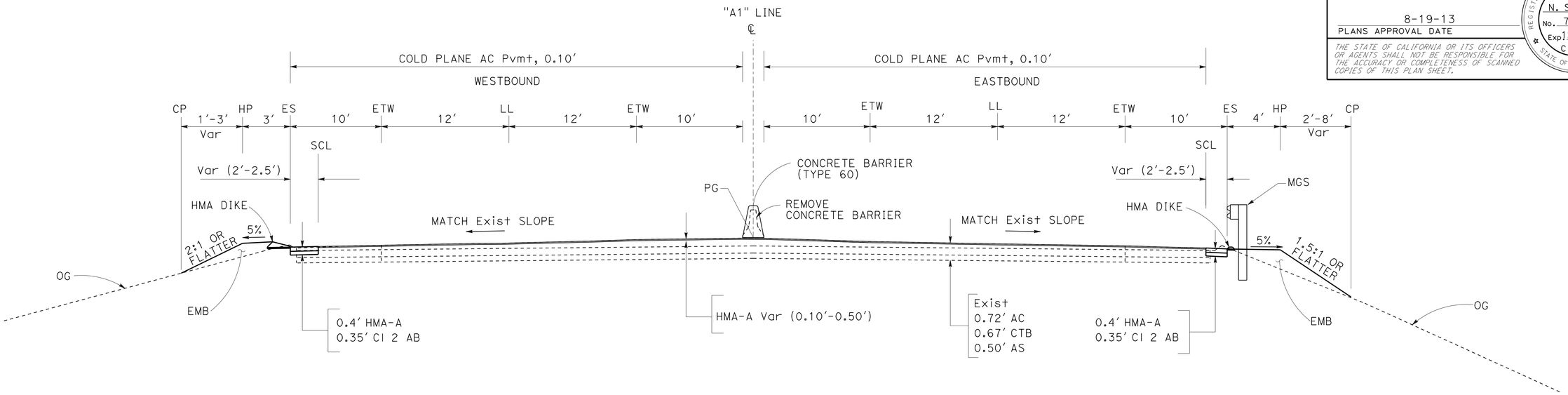

"A1" 140+93.00 TO 142+08.63

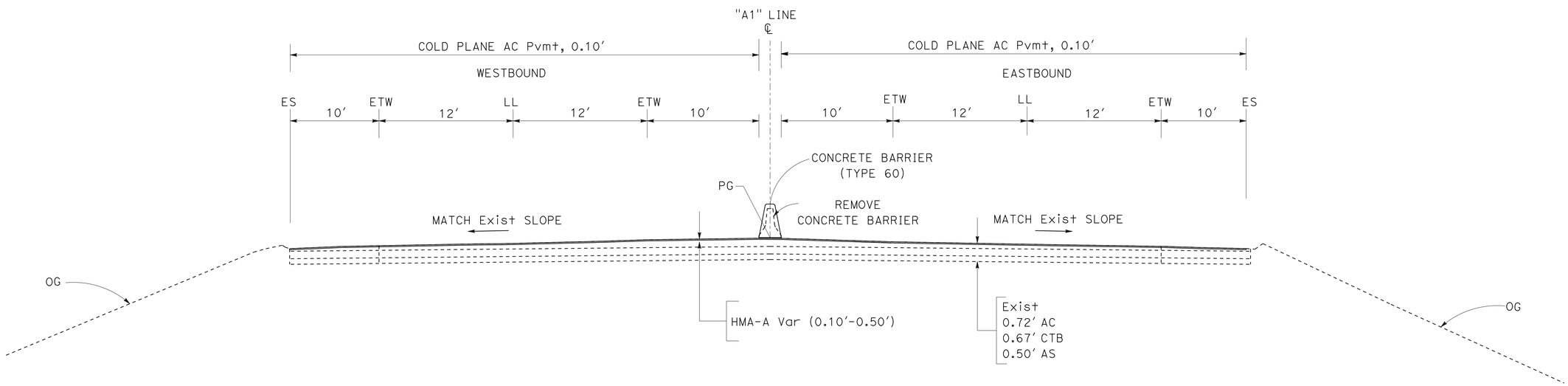

"A1" 144+75.90 TO 153+45.00

"A1" 132+00.00 TO 140+93.00

ROUTE 50

TYPICAL CROSS SECTIONS

NO SCALE

X-2

REVISED BY | DATE REVISED

WESLEY LEE | NARAYAN SELWAL

CALCULATED-DESIGNED BY | CHECKED BY

FUNCTIONAL SUPERVISOR | NESAR FORMOLI

STATE OF CALIFORNIA - DEPARTMENT OF TRANSPORTATION
Caltrans
NORTH REGION
DIVISION OF ENGINEERING

LAST REVISION 00-00-00 | DATE PLOTTED => 23-OCT-2013 | TIME PLOTTED => 10:11

Dist	COUNTY	ROUTE	POST MILES TOTAL PROJECT	SHEET No.	TOTAL SHEETS
03	ED	50	R30.7/R31.7	4	119

REGISTERED CIVIL ENGINEER 8-19-13 DATE

8-19-13
PLANS APPROVAL DATE

REGISTERED PROFESSIONAL ENGINEER
N. SELWAL
No. 74816
Exp 12-31-13
CIVIL
STATE OF CALIFORNIA

THE STATE OF CALIFORNIA OR ITS OFFICERS OR AGENTS SHALL NOT BE RESPONSIBLE FOR THE ACCURACY OR COMPLETENESS OF SCANNED COPIES OF THIS PLAN SHEET.

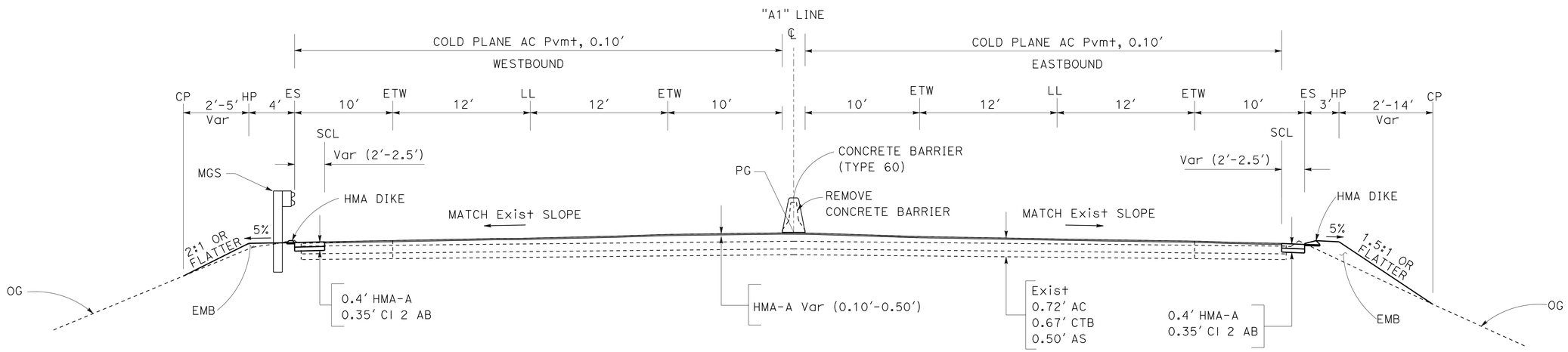

"A1" 143+41.88 TO 144+75.90

ROUTE 50

TYPICAL CROSS SECTIONS

NO SCALE

X-3

STATE OF CALIFORNIA - DEPARTMENT OF TRANSPORTATION
Caltrans®
NORTH REGION
DIVISION OF ENGINEERING

FUNCTIONAL SUPERVISOR: NESAR FORMOLI

CALCULATED-DESIGNED BY: WESLEY LEE
CHECKED BY: NARAYAN SELWAL

REVISED BY
DATE REVISED

LAST REVISION 00-00-00
DATE PLOTTED => 23-OCT-2013
TIME PLOTTED => 10:11

Dist	COUNTY	ROUTE	POST MILES TOTAL PROJECT	SHEET No.	TOTAL SHEETS
03	ED	50	R30.7/R31.7	5	119

REGISTERED CIVIL ENGINEER 8-19-13 DATE

8-19-13
PLANS APPROVAL DATE

REGISTERED PROFESSIONAL ENGINEER
N. SELWAL
No. 74816
Exp. 12-31-13
CIVIL
STATE OF CALIFORNIA

THE STATE OF CALIFORNIA OR ITS OFFICERS OR AGENTS SHALL NOT BE RESPONSIBLE FOR THE ACCURACY OR COMPLETENESS OF SCANNED COPIES OF THIS PLAN SHEET.

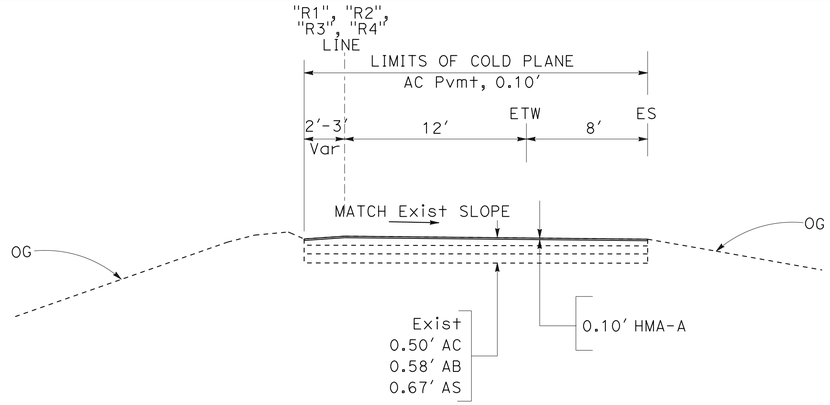

"R1", "R2", "R3" AND "R4" LINES

RAMPS

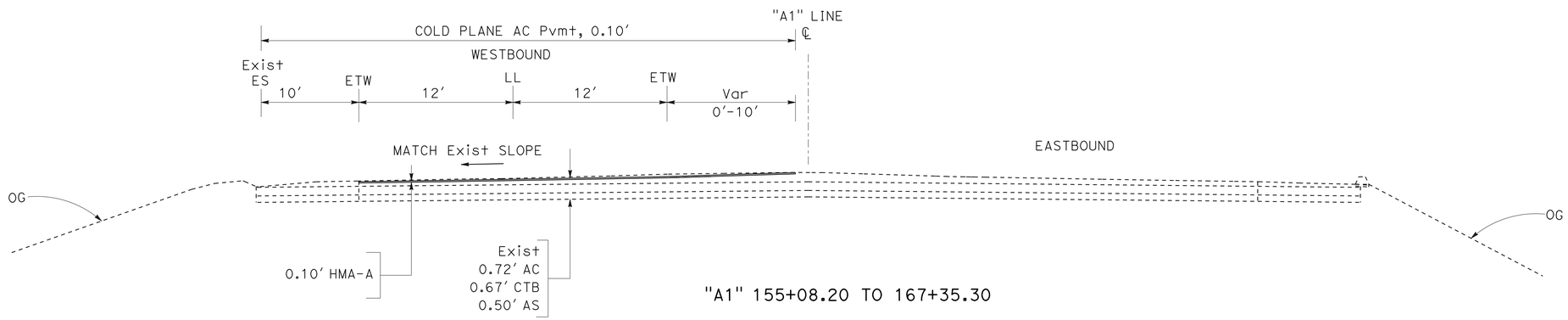

"A1" 155+08.20 TO 167+35.30

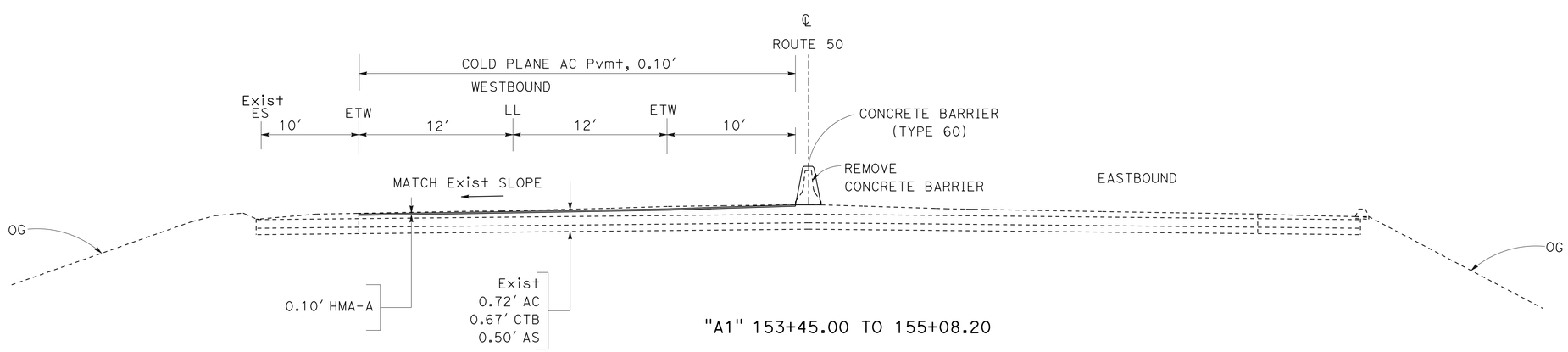

"A1" 153+45.00 TO 155+08.20

ROUTE 50

TYPICAL CROSS SECTIONS

NO SCALE

X-4

STATE OF CALIFORNIA - DEPARTMENT OF TRANSPORTATION
Caltrans®
NORTH REGION
DIVISION OF ENGINEERING

FUNCTIONAL SUPERVISOR: NESAR FORMOLI

CALCULATED-DESIGNED BY: WESLEY LEE
CHECKED BY: NARAYAN SELWAL

REVISED BY | DATE REVISED

LAST REVISION 00-00-00 | DATE PLOTTED => 23-OCT-2013 | TIME PLOTTED => 10:11

Dist	COUNTY	ROUTE	POST MILES TOTAL PROJECT	SHEET No.	TOTAL SHEETS
03	ED	50	R30.7/R31.7	6	119

REGISTERED CIVIL ENGINEER 8-19-13 DATE

8-19-13
PLANS APPROVAL DATE

REGISTERED PROFESSIONAL ENGINEER N. SELWAL No. 74816 Exp. 12-31-13 CIVIL STATE OF CALIFORNIA

THE STATE OF CALIFORNIA OR ITS OFFICERS OR AGENTS SHALL NOT BE RESPONSIBLE FOR THE ACCURACY OR COMPLETENESS OF SCANNED COPIES OF THIS PLAN SHEET.

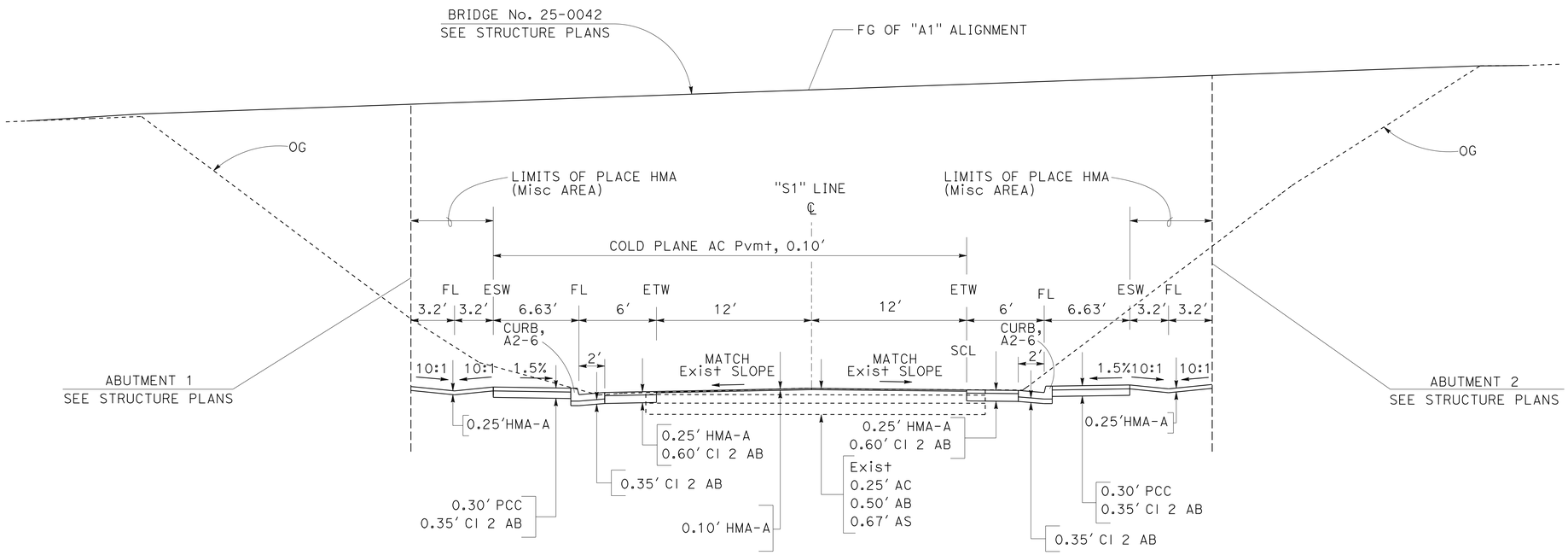

"S1" 14+60.00 TO 15+55.55

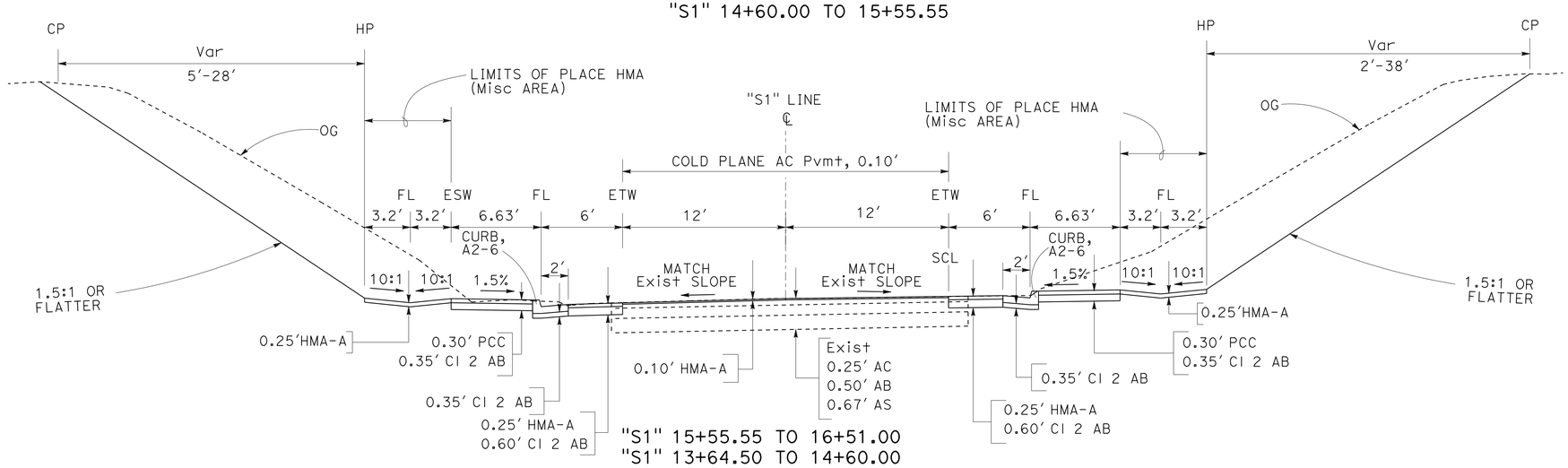

"S1" 15+55.55 TO 16+51.00
"S1" 13+64.50 TO 14+60.00

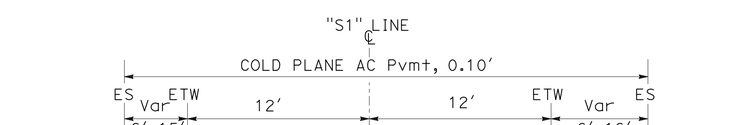

"S1" 16+51.00 TO 17+04.00
"S1" 13+64.50 TO 14+60.00

SLY PARK ROAD

TYPICAL CROSS SECTIONS

NO SCALE

X-5

STATE OF CALIFORNIA - DEPARTMENT OF TRANSPORTATION
Caltrans
NORTH REGION
DIVISION OF ENGINEERING

FUNCTIONAL SUPERVISOR: NESAR FORMOLI
CALCULATED-DESIGNED BY: WESLEY LEE
CHECKED BY: NARAYAN SELWAL
REVISED BY
DATE REVISED

LAST REVISION 00-00-00
DATE PLOTTED => 23-OCT-2013
TIME PLOTTED => 10:11

Dist	COUNTY	ROUTE	POST MILES TOTAL PROJECT	SHEET No.	TOTAL SHEETS
03	ED	50	R30.7/R31.7	7	119

REGISTERED CIVIL ENGINEER 8-19-13 DATE

8-19-13
PLANS APPROVAL DATE

REGISTERED PROFESSIONAL ENGINEER N. SELWAL No. 74816 Exp 12-31-13 CIVIL STATE OF CALIFORNIA

THE STATE OF CALIFORNIA OR ITS OFFICERS OR AGENTS SHALL NOT BE RESPONSIBLE FOR THE ACCURACY OR COMPLETENESS OF SCANNED COPIES OF THIS PLAN SHEET.

NOTES:

1. FOR COMPLETE RIGHT OF WAY AND ACCURATE ACCESS DATA, SEE RIGHT OF WAY RECORD MAPS AT DISTRICT OFFICE.
2. ALL STATION OFFSETS ARE FROM THE "A1" LINE UNLESS OTHERWISE NOTED.
3. SEE STRUCTURE PLANS FOR DETAILS OF CONCRETE BARRIER (TYPE 732, Mod), APPROACH SLAB, AND CONCRETE BARRIER (TYPE 60A).

CURVE DATA

No. ⊕	R	Δ	T	L
1	2800′	11°30′04″	281.97′	562.05′

LAYOUT
SCALE: 1"=50′

L-1

STATE OF CALIFORNIA - DEPARTMENT OF TRANSPORTATION
Caltrans
NORTH REGION
DIVISION OF ENGINEERING

FUNCTIONAL SUPERVISOR: NESAR FORMOLI
CALCULATED-DESIGNED BY: WESLEY LEE
CHECKED BY: NARAYAN SELWAL
REVISED BY
DATE REVISED

LAST REVISION 00-00-00
DATE PLOTTED => 23-OCT-2013
TIME PLOTTED => 10:11

Dist	COUNTY	ROUTE	POST MILES TOTAL PROJECT	SHEET No.	TOTAL SHEETS
03	ED	50	R30.7/R31.7	8	119

REGISTERED CIVIL ENGINEER 8-19-13 DATE

PLANS APPROVAL DATE 8-19-13

REGISTERED PROFESSIONAL ENGINEER N. SELWAL No. 74816 Exp. 12-31-13 CIVIL STATE OF CALIFORNIA

THE STATE OF CALIFORNIA OR ITS OFFICERS OR AGENTS SHALL NOT BE RESPONSIBLE FOR THE ACCURACY OR COMPLETENESS OF SCANNED COPIES OF THIS PLAN SHEET.

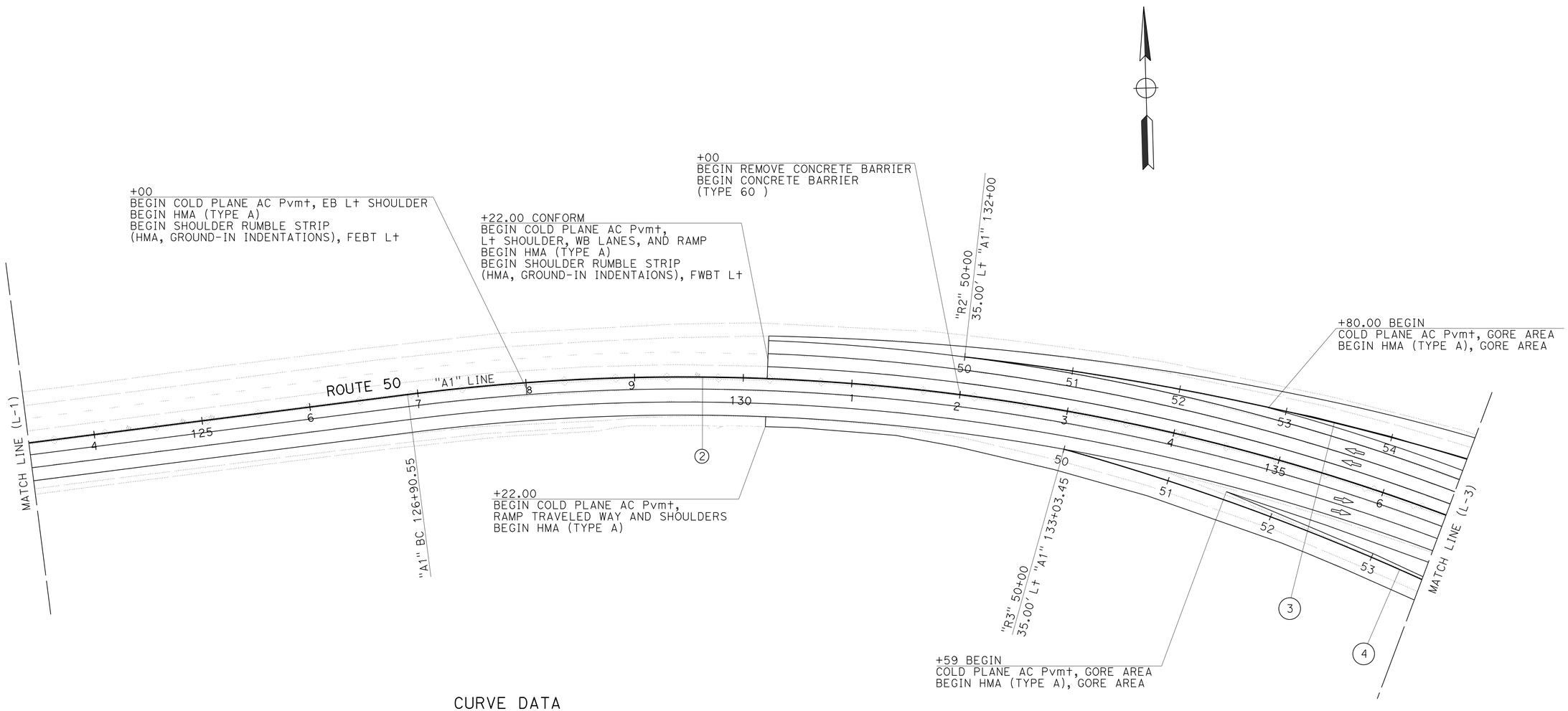

CURVE DATA

No. ⊕	R	Δ	T	L
2	2000′	34°26′38″	619.94′	1202.32′
3	2651′	11°40′35″	271.05′	540.22′
4	2270′	10°08′11″	201.36′	401.68′

LAYOUT

SCALE: 1"=50′

L-2

STATE OF CALIFORNIA - DEPARTMENT OF TRANSPORTATION
Caltrans®
NORTH REGION
DIVISION OF ENGINEERING

FUNCTIONAL SUPERVISOR: NESAR FORMOLI

CALCULATED-DESIGNED BY: WESLEY LEE
CHECKED BY: NARAYAN SELWAL

REVISED BY
DATE REVISED

LAST REVISION 00-00-00
DATE PLOTTED => 23-OCT-2013
TIME PLOTTED => 10:11

Dist	COUNTY	ROUTE	POST MILES TOTAL PROJECT	SHEET No.	TOTAL SHEETS
03	ED	50	R30.7/R31.7	9	119

REGISTERED CIVIL ENGINEER 8-19-13 DATE

8-19-13
PLANS APPROVAL DATE

REGISTERED PROFESSIONAL ENGINEER N. SELWAL No. 74816 Exp. 12-31-13 CIVIL STATE OF CALIFORNIA

THE STATE OF CALIFORNIA OR ITS OFFICERS OR AGENTS SHALL NOT BE RESPONSIBLE FOR THE ACCURACY OR COMPLETENESS OF SCANNED COPIES OF THIS PLAN SHEET.

NOTE:

1. FOR APPROACH SLABS, CONCRETE BARRIER (TYPE 60A), CONCRETE BARRIER (TYPE 732 MODIFIED), SEE STRUCTURE PLANS.

LEGEND

SAW CUT LINE

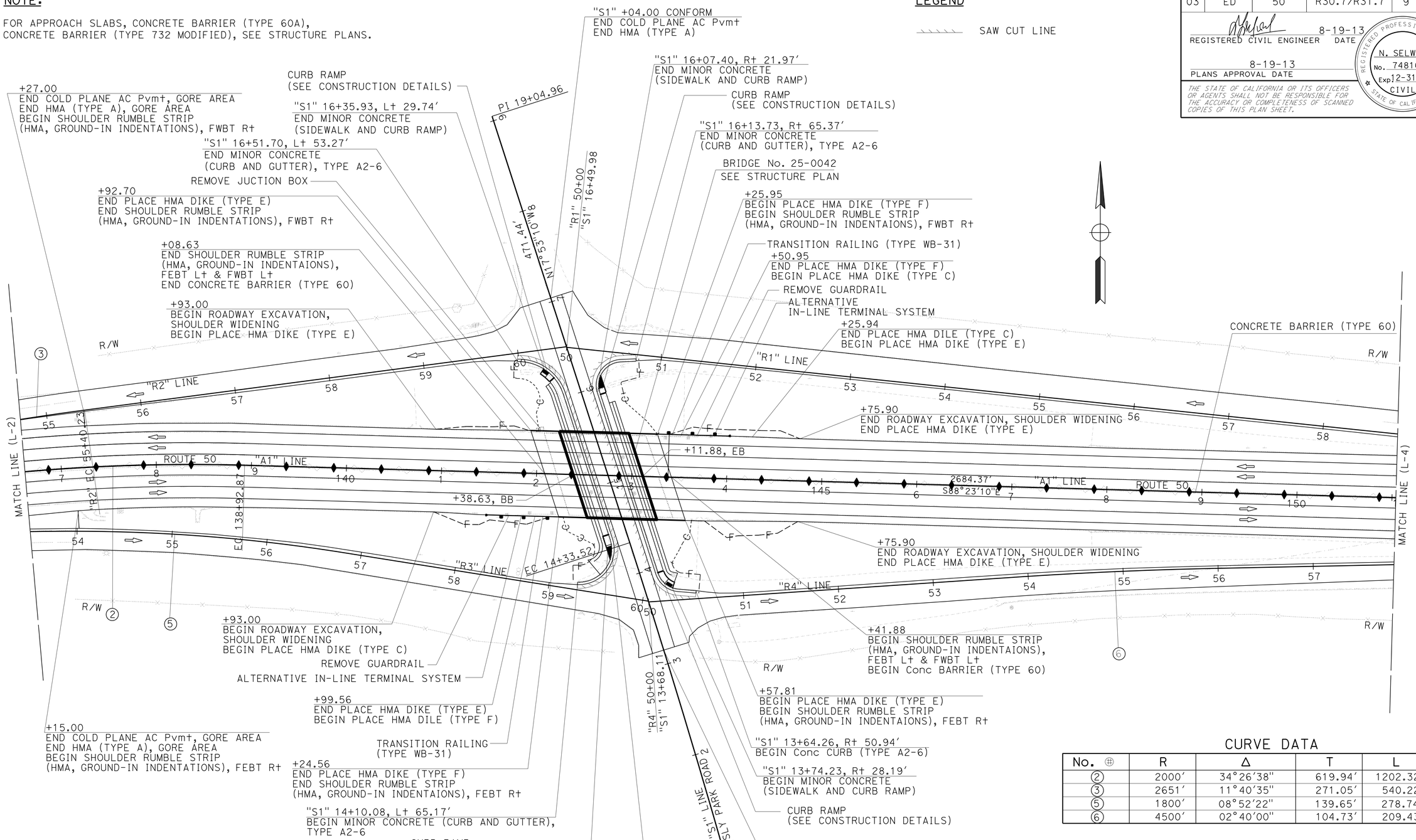

CURVE DATA

No.	R	Δ	T	L
2	2000'	34°26'38"	619.94'	1202.32'
3	2651'	11°40'35"	271.05'	540.22'
5	1800'	08°52'22"	139.65'	278.74'
6	4500'	02°40'00"	104.73'	209.43'

LAYOUT

SCALE: 1"=50'

L-3

STATE OF CALIFORNIA - DEPARTMENT OF TRANSPORTATION
Caltrans
NORTH REGION
DIVISION OF ENGINEERING

FUNCTIONAL SUPERVISOR: NESAR FORMOLI

WESLEY LEE
NARAYAN SELWAL

CALCULATED-DESIGNED BY
CHECKED BY
REVISED BY
DATE REVISED

LAST REVISION 00-00-00
DATE PLOTTED => 23-OCT-2013
TIME PLOTTED => 10:11

Dist	COUNTY	ROUTE	POST MILES TOTAL PROJECT	SHEET No.	TOTAL SHEETS
03	ED	50	R30.7/R31.7	10	119

REGISTERED CIVIL ENGINEER 8-19-13 DATE

8-19-13
PLANS APPROVAL DATE

REGISTERED PROFESSIONAL ENGINEER N. SELWAL No. 74816 Exp. 12-31-13 CIVIL STATE OF CALIFORNIA

THE STATE OF CALIFORNIA OR ITS OFFICERS OR AGENTS SHALL NOT BE RESPONSIBLE FOR THE ACCURACY OR COMPLETENESS OF SCANNED COPIES OF THIS PLAN SHEET.

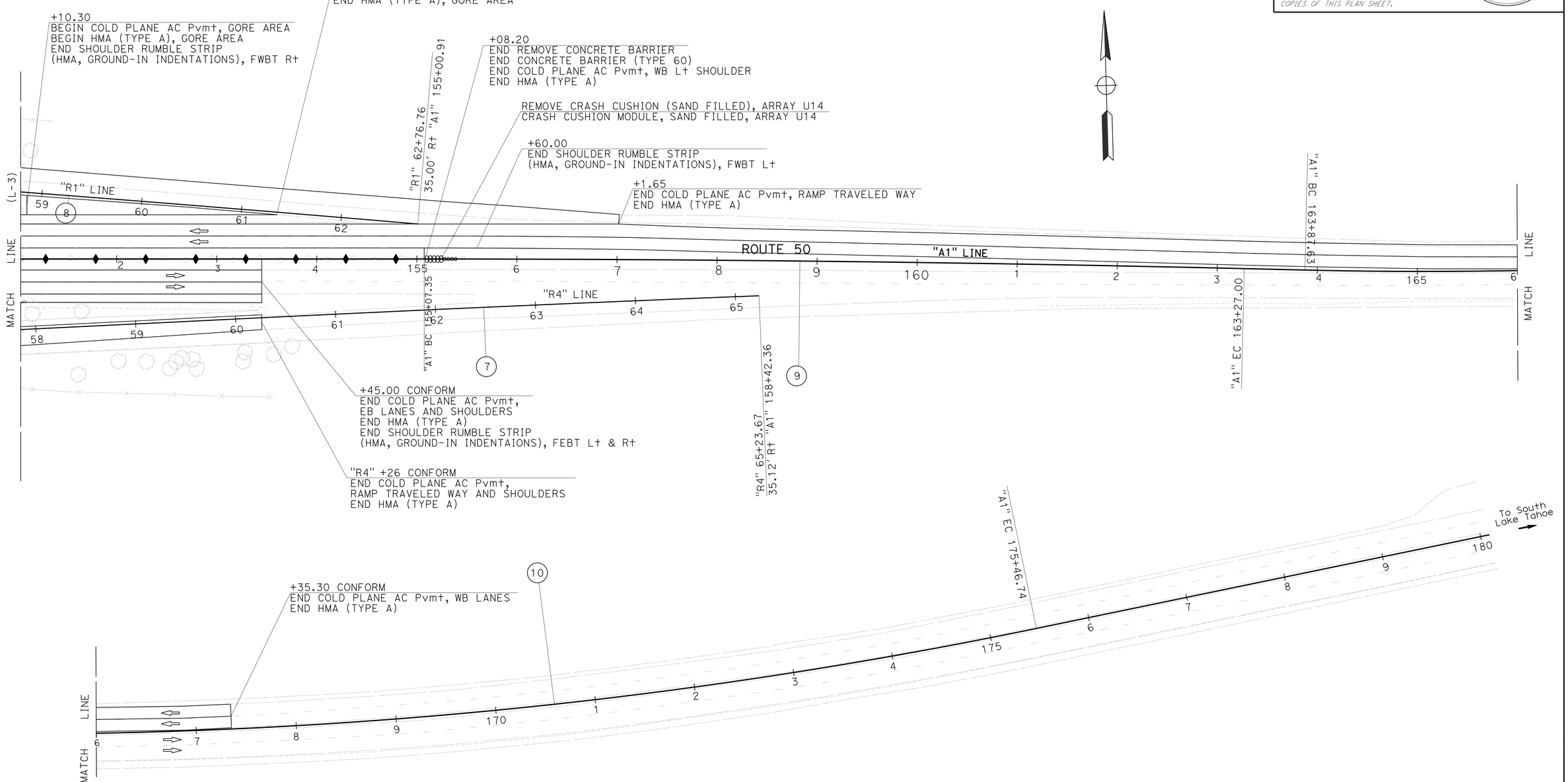

CURVE DATA

No. ⊕	R	Δ	T	L
7	50768′	00°33′25″	246.71′	493.41′
8	40482′	00°33′16″	195.89′	391.78′
9	35000′	01°20′30″	409.84′	819.64′
10	5100′	13°01′19″	582.06′	1159.11′

LAYOUT
SCALE: 1"=50′

L-4

STATE OF CALIFORNIA - DEPARTMENT OF TRANSPORTATION
Caltrans
NORTH REGION
DIVISION OF ENGINEERING

FUNCTIONAL SUPERVISOR: NESAR FORMOLI
CALCULATED-DESIGNED BY: WESLEY LEE
CHECKED BY: NARAYAN SELWAL
REVISED BY
DATE REVISED

LAST REVISION 00-00-00
DATE PLOTTED => 23-OCT-2013
TIME PLOTTED => 10:11

Dist	COUNTY	ROUTE	POST MILES TOTAL PROJECT	SHEET No.	TOTAL SHEETS
03	ED	50	R30.7/R31.7	11	119

REGISTERED CIVIL ENGINEER 8-19-13 DATE

8-19-13
PLANS APPROVAL DATE

REGISTERED PROFESSIONAL ENGINEER N. SELWAL No. 74816 Exp. 12-31-13 CIVIL STATE OF CALIFORNIA

THE STATE OF CALIFORNIA OR ITS OFFICERS OR AGENTS SHALL NOT BE RESPONSIBLE FOR THE ACCURACY OR COMPLETENESS OF SCANNED COPIES OF THIS PLAN SHEET.

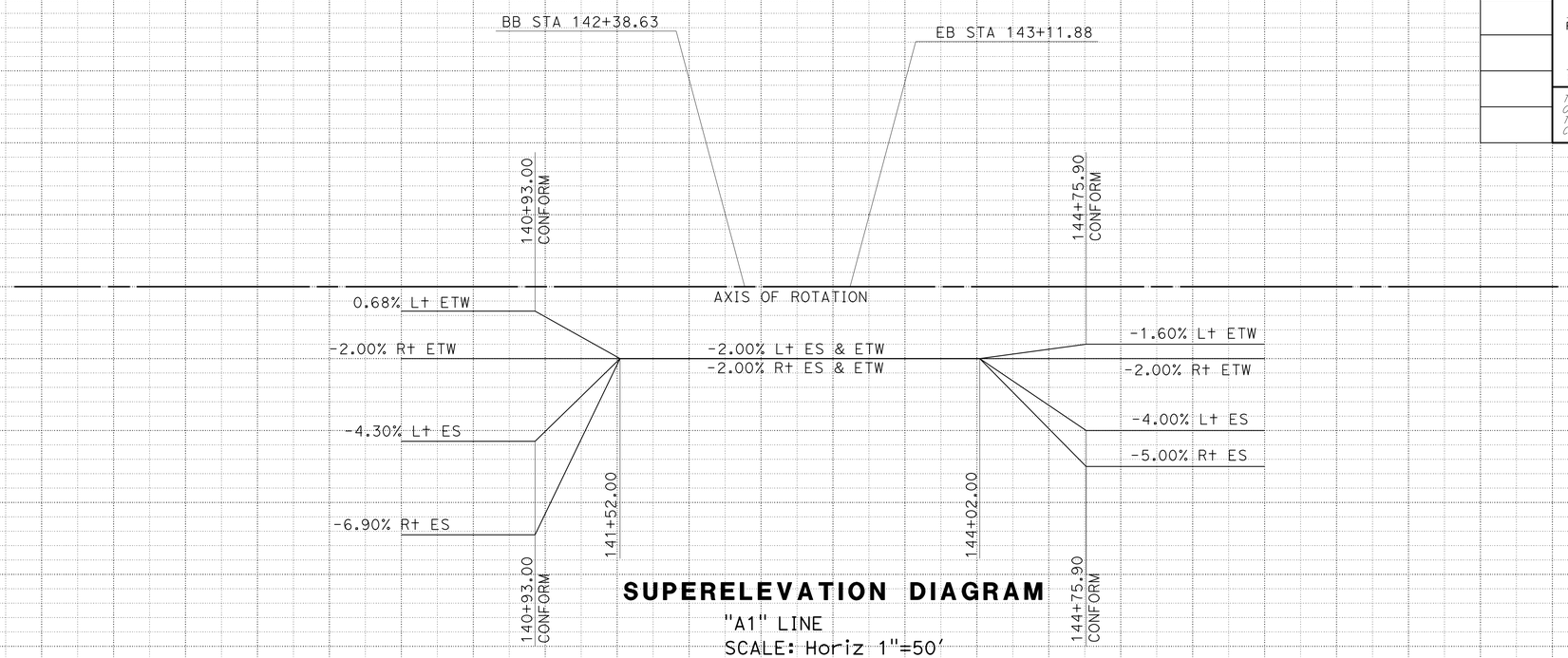

SUPERELEVATION DIAGRAM
"A1" LINE
SCALE: Horiz 1"=50'

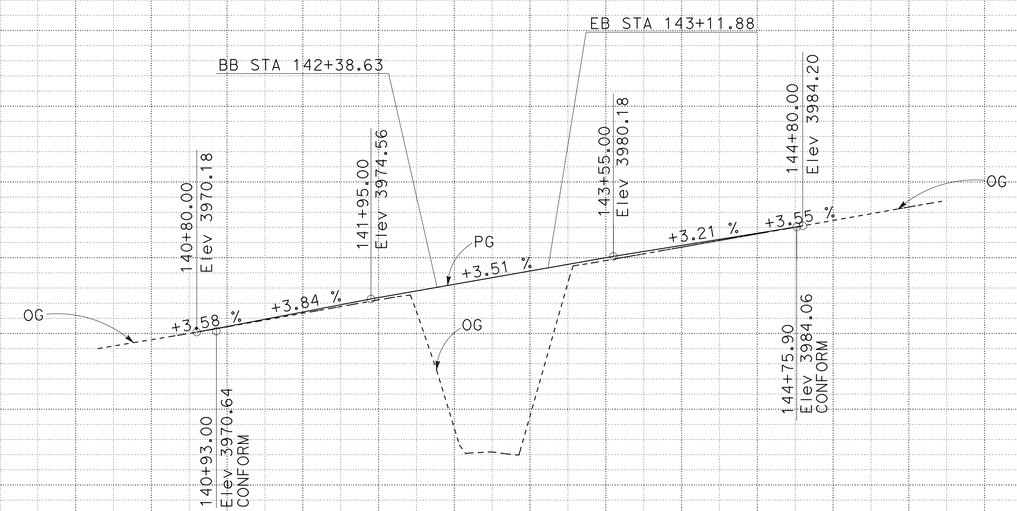

PROFILE
ROUTE 50
"A1" LINE
SCALE: Horiz 1"=50'
Vert 1"=10'

PROFILE AND SUPERELEVATION DIAGRAM

SCALE AS SHOWN

PS-1

STATION	8	9	140	1	2	3	4	145	TOTAL
CY Exc				63					
CY Emb				429					

STATE OF CALIFORNIA - DEPARTMENT OF TRANSPORTATION
Caltrans
NORTH REGION DIVISION OF ENGINEERING

FUNCTIONAL SUPERVISOR: NESAR FORMOLI
CALCULATED-DESIGNED BY: WESLEY LEE
CHECKED BY: NARAYAN SELWAL
REVISED BY
DATE REVISED

LAST REVISION 00-00-00
DATE PLOTTED => 23-OCT-2013
TIME PLOTTED => 10:11

Dist	COUNTY	ROUTE	POST MILES TOTAL PROJECT	SHEET No.	TOTAL SHEETS
03	ED	50	R30.7/R31.7	12	119

REGISTERED CIVIL ENGINEER 8-19-13 DATE

8-19-13
PLANS APPROVAL DATE

REGISTERED PROFESSIONAL ENGINEER N. SELWAL No. 74816 Exp. 12-31-13 CIVIL STATE OF CALIFORNIA

THE STATE OF CALIFORNIA OR ITS OFFICERS OR AGENTS SHALL NOT BE RESPONSIBLE FOR THE ACCURACY OR COMPLETENESS OF SCANNED COPIES OF THIS PLAN SHEET.

NOTES

1. PRECONSTRUCTION AND POST-CONSTRUCTION SURVEYS REQUIRED FOR CURB RAMP AT "S1" 14+33 LEFT AND "S1" 16+00 RIGTH.

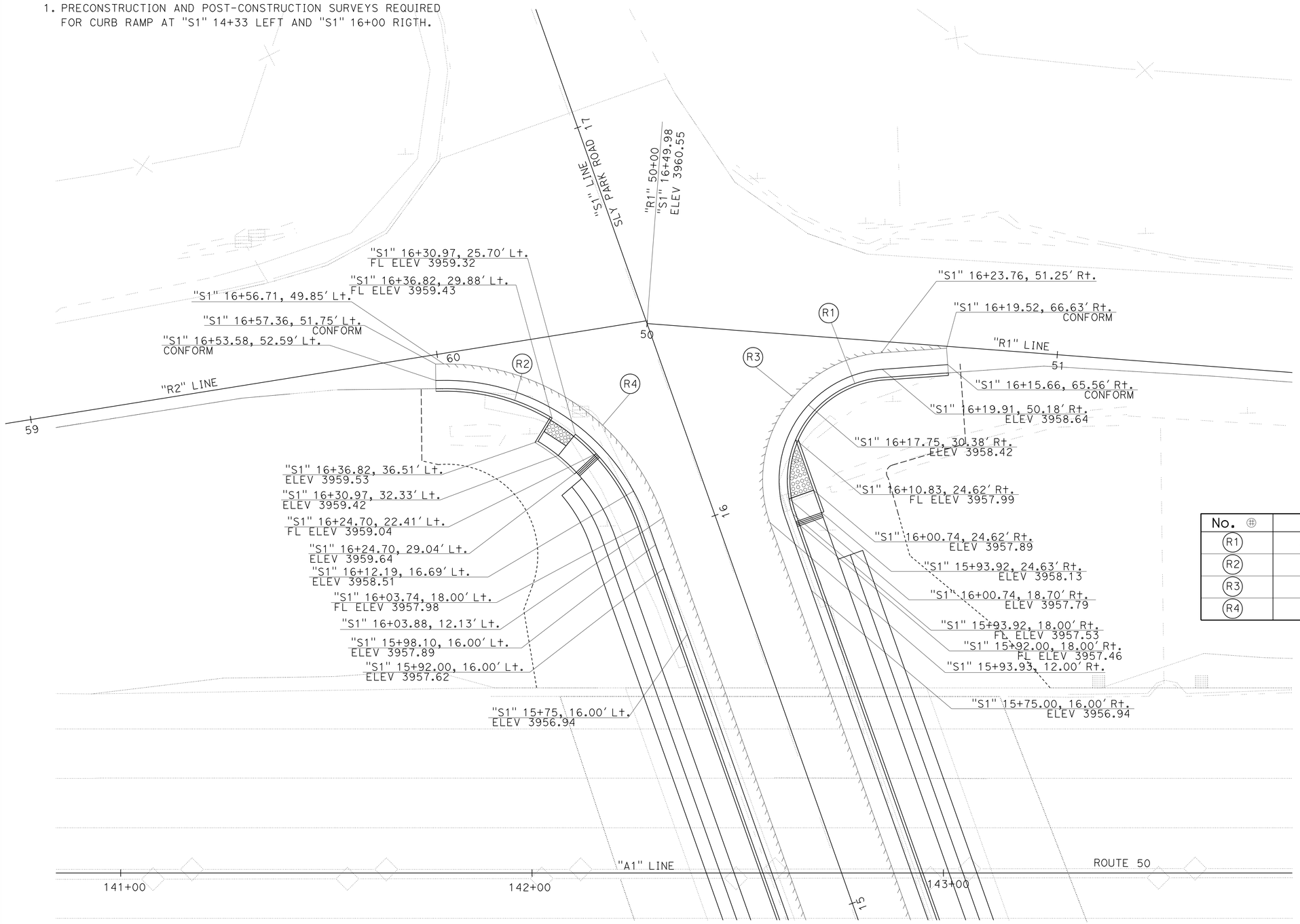

CURVE DATA

No. ⊕	R	Δ	T	L
R1	25'	105°20'30"	32.78'	45.96'
R2	50'	71°05'33"	35.73'	62.04'
R3	31'	105°20'42"	40.65'	57.00'
R4	56'	71°05'33"	40.01'	69.48'

CONSTRUCTION DETAILS

NO SCALE

C-1

STATE OF CALIFORNIA - DEPARTMENT OF TRANSPORTATION
Caltrans
NORTH REGION
DIVISION OF ENGINEERING

WESLEY LEE
NARAYAN SELWAL
NESAR FORMOLI

CALCULATED-DESIGNED BY | CHECKED BY | FUNCTIONAL SUPERVISOR | REVISED BY | DATE REVISED

LAST REVISION 00-00-00 | DATE PLOTTED => 23-OCT-2013 | TIME PLOTTED => 10:11

Dist	COUNTY	ROUTE	POST MILES TOTAL PROJECT	SHEET No.	TOTAL SHEETS
03	ED	50	R30.7/R31.7	13	119

REGISTERED CIVIL ENGINEER 8-19-13 DATE

8-19-13
PLANS APPROVAL DATE

REGISTERED PROFESSIONAL ENGINEER N. SELWAL No. 74816 Exp. 12-31-13 CIVIL STATE OF CALIFORNIA

THE STATE OF CALIFORNIA OR ITS OFFICERS OR AGENTS SHALL NOT BE RESPONSIBLE FOR THE ACCURACY OR COMPLETENESS OF SCANNED COPIES OF THIS PLAN SHEET.

NOTES

1. PRECONSTRUCTION AND POST-CONSTRUCTION SURVEYS REQUIRED FOR CURB RAMP AT "S1" 14+33 LEFT AND "S1" 16+00 RIGTH.

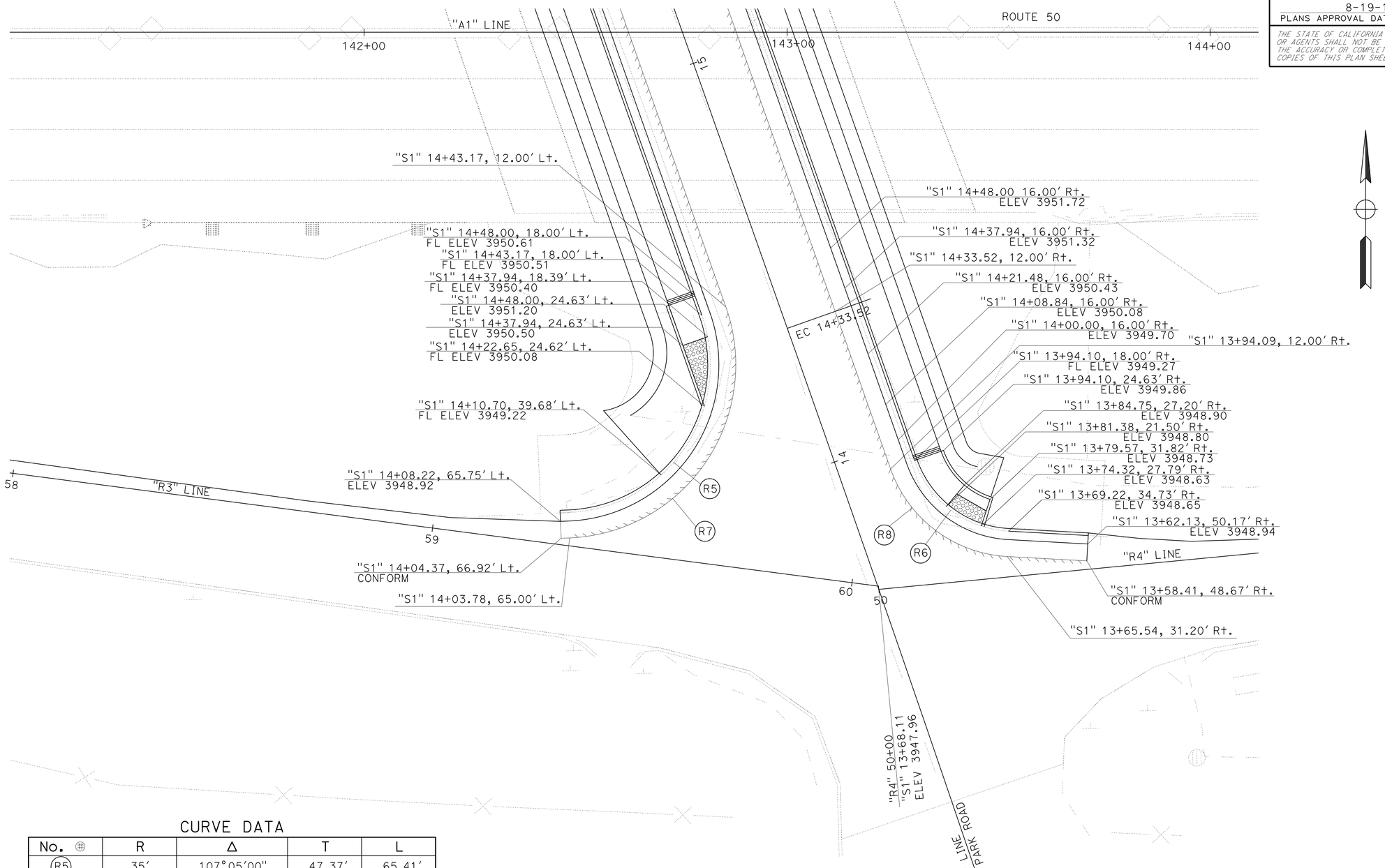

CURVE DATA

No. ⊕	R	Δ	T	L
R5	35'	107°05'00"	47.37'	65.41'
R6	25'	67°32'40"	16.72'	29.47'
R7	41'	107°04'57"	55.49'	76.63'
R8	31'	67°31'45"	20.72'	36.54'

CONSTRUCTION DETAILS

NO SCALE

C-2

STATE OF CALIFORNIA - DEPARTMENT OF TRANSPORTATION
Caltrans
NORTH REGION
DIVISION OF ENGINEERING

FUNCTIONAL SUPERVISOR: NESAR FORMOLI
CALCULATED-DESIGNED BY: WESLEY LEE
CHECKED BY: NARAYAN SELWAL
REVISED BY
DATE REVISED

LAST REVISION 00-00-00
DATE PLOTTED => 23-OCT-2013
TIME PLOTTED => 10:11

Dist	COUNTY	ROUTE	POST MILES TOTAL PROJECT	SHEET No.	TOTAL SHEETS
03	ED	50	R30.7/R31.7	14	119

REGISTERED CIVIL ENGINEER 8-19-13 DATE

8-19-13
PLANS APPROVAL DATE

REGISTERED PROFESSIONAL ENGINEER
N. SELWAL
No. 74816
Exp. 12-31-13
CIVIL
STATE OF CALIFORNIA

THE STATE OF CALIFORNIA OR ITS OFFICERS OR AGENTS SHALL NOT BE RESPONSIBLE FOR THE ACCURACY OR COMPLETENESS OF SCANNED COPIES OF THIS PLAN SHEET.

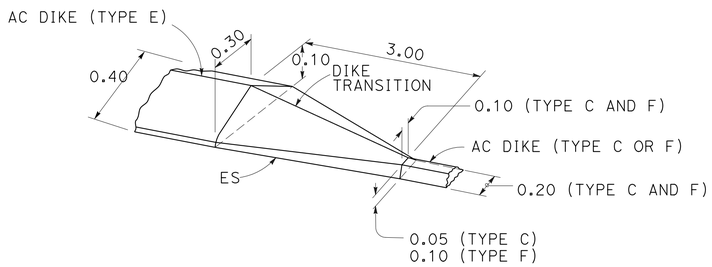

DIKE TRANSITION TYPE E TO TYPE C OR TYPE F

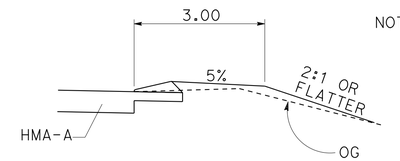

NOTE: FOR DETAILS NOT SHOWN, SEE STANDARD PLAN A87B

MOUNTABLE HMA DIKE (TYPE E)

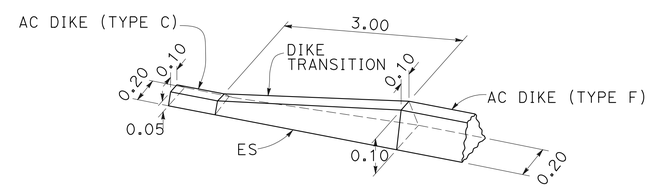

DIKE TRANSITION TYPE C TO TYPE F

NOTE: ALL DIMENSIONS ARE IN FEET

CONSTRUCTION DETAILS

NO SCALE

C-3

STATE OF CALIFORNIA - DEPARTMENT OF TRANSPORTATION
Caltrans
NORTH REGION
DIVISION OF ENGINEERING

FUNCTIONAL SUPERVISOR: NESAR FORMOLI
CALCULATED-DESIGNED BY: WESLEY LEE
CHECKED BY: NARAYAN SELWAL
REVISED BY
DATE REVISED

LAST REVISION 00-00-00
DATE PLOTTED => 23-OCT-2013
TIME PLOTTED => 10:11

Dist	COUNTY	ROUTE	POST MILES TOTAL PROJECT	SHEET No.	TOTAL SHEETS
03	ED	50	R30.7/R31.7	15	119

REGISTERED CIVIL ENGINEER 8-19-13 DATE

8-19-13
PLANS APPROVAL DATE

REGISTERED PROFESSIONAL ENGINEER N. SELWAL No. 74816 Exp. 12-31-13 CIVIL STATE OF CALIFORNIA

THE STATE OF CALIFORNIA OR ITS OFFICERS OR AGENTS SHALL NOT BE RESPONSIBLE FOR THE ACCURACY OR COMPLETENESS OF SCANNED COPIES OF THIS PLAN SHEET.

NOTES:

1. FOR ACCURATE RIGHT OF WAY DATA, CONTACT RIGHT OF WAY ENGINEERING AT THE DISTRICT OFFICE.
2. SEE DRAINAGE DETAIL SHEETS FOR RERFERENCED DETAILS.

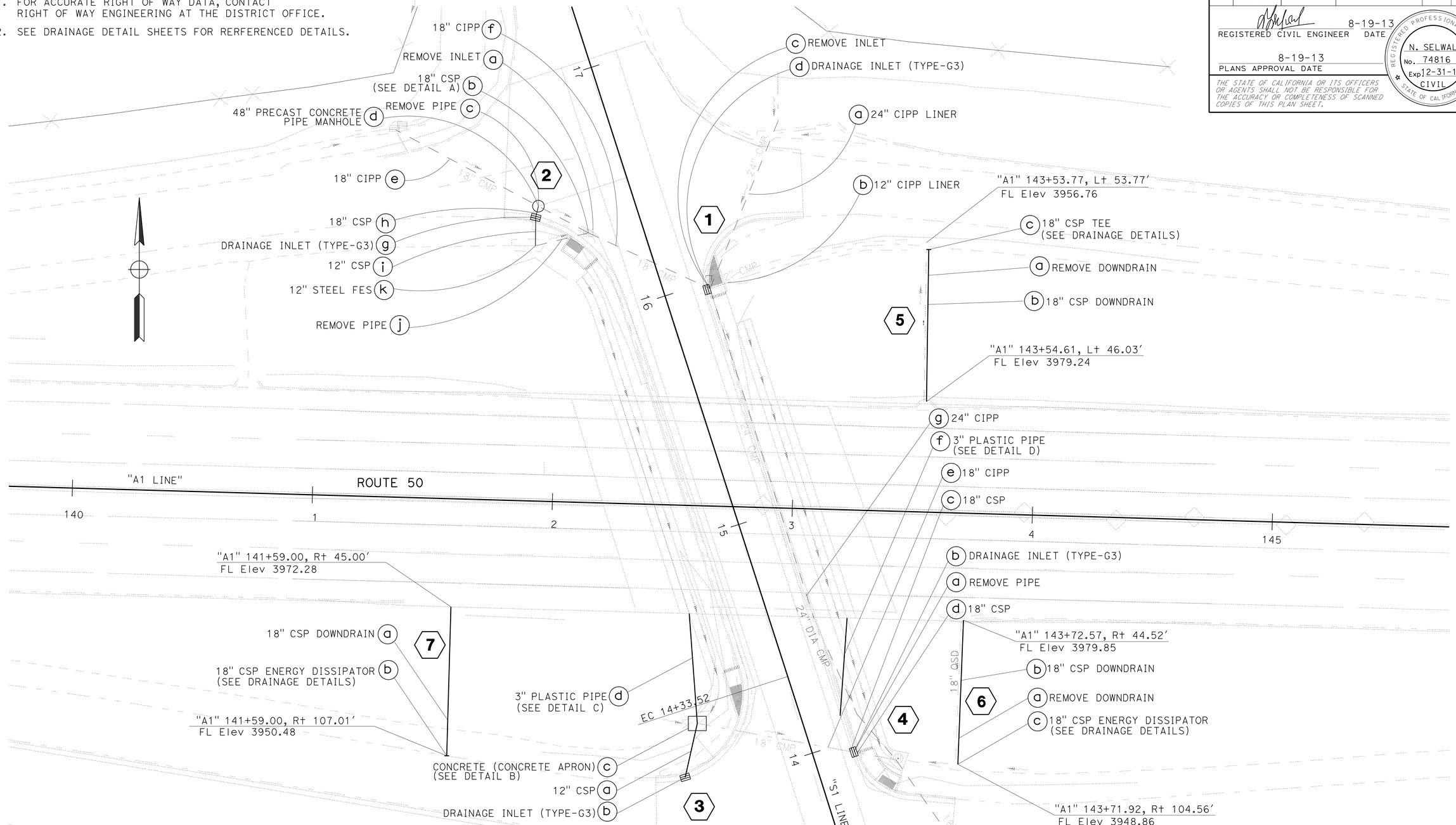

DRAINAGE PLAN

SCALE: 1"=20'

D-1

APPROVED FOR DRAINAGE WORK ONLY

STATE OF CALIFORNIA - DEPARTMENT OF TRANSPORTATION
Caltrans
NORTH REGION
DIVISION OF ENGINEERING

FUNCTIONAL SUPERVISOR: NESAR FORMOLI
CALCULATED-DESIGNED BY: WESLEY LEE
CHECKED BY: NARAYAN SELWAL
REVISED BY
DATE REVISED

LAST REVISION | DATE PLOTTED => 23-OCT-2013 | TIME PLOTTED => 10:11
00-00-00

Dist	COUNTY	ROUTE	POST MILES TOTAL PROJECT	SHEET No.	TOTAL SHEETS
03	ED	50	R30.7/R31.7	16	119

REGISTERED CIVIL ENGINEER 8-19-13 DATE

8-19-13
PLANS APPROVAL DATE

REGISTERED PROFESSIONAL ENGINEER N. SELWAL No. 74816 Exp. 12-31-13 CIVIL STATE OF CALIFORNIA

THE STATE OF CALIFORNIA OR ITS OFFICERS OR AGENTS SHALL NOT BE RESPONSIBLE FOR THE ACCURACY OR COMPLETENESS OF SCANNED COPIES OF THIS PLAN SHEET.

NOTE: DRAINAGE PROFILE FOR DRAINAGE SYSTEM No. 5, 6 AND 7 ARE NOT SHOWN.
SEE DRAINAGE QUANTITIES SHEET FOR INFORMATION.

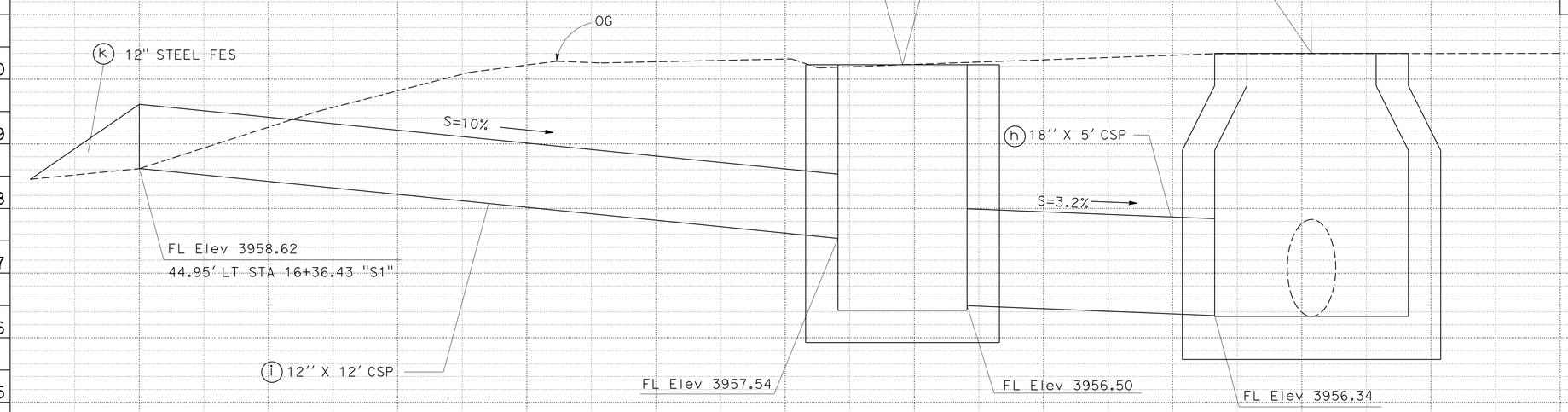

DRAINAGE SYSTEM No. 2

NOTE: DRAINAGE UNITS a b c e f j NOT SHOWN.
SEE DRAINAGE QUANTITIES SHEET FOR INFORMATION.

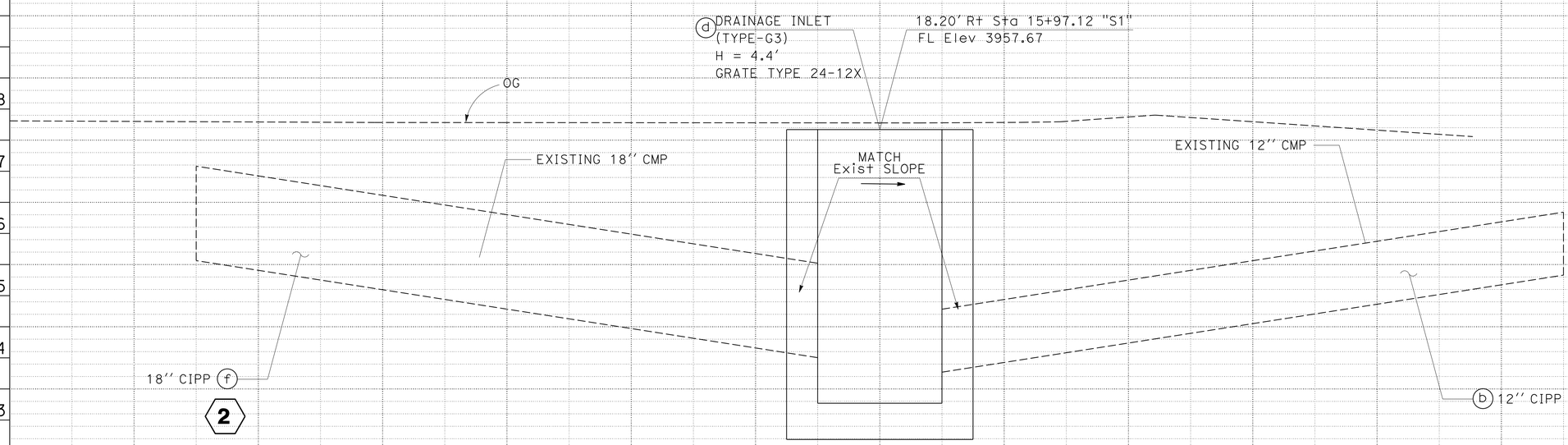

DRAINAGE SYSTEM No. 1

NOTE: DRAINAGE UNITS a c NOT SHOWN.
SEE DRAINAGE QUANTITIES SHEET FOR INFORMATION.

DRAINAGE PROFILE

SCALE: 1" = 1'

DP-1

STATION		TOTAL
CY	Exc	
	Emb	

STATE OF CALIFORNIA - DEPARTMENT OF TRANSPORTATION
NORTH REGION DIVISION OF ENGINEERING
Caltrans

FUNCTIONAL SUPERVISOR: NESAR FORMOLI
CALCULATED-DESIGNED BY: WESLEY LEE
CHECKED BY: NARAYAN SELWAL
REVISED BY / DATE REVISED

LAST REVISION 00-00-00 DATE PLOTTED => 23-OCT-2013 TIME PLOTTED => 10:11

Dist	COUNTY	ROUTE	POST MILES TOTAL PROJECT	SHEET No.	TOTAL SHEETS
03	ED	50	R30.7/R31.7	17	119

REGISTERED CIVIL ENGINEER 8-19-13 DATE

8-19-13
PLANS APPROVAL DATE

REGISTERED PROFESSIONAL ENGINEER N. SELWAL No. 74816 Exp. 12-31-13 CIVIL STATE OF CALIFORNIA

THE STATE OF CALIFORNIA OR ITS OFFICERS OR AGENTS SHALL NOT BE RESPONSIBLE FOR THE ACCURACY OR COMPLETENESS OF SCANNED COPIES OF THIS PLAN SHEET.

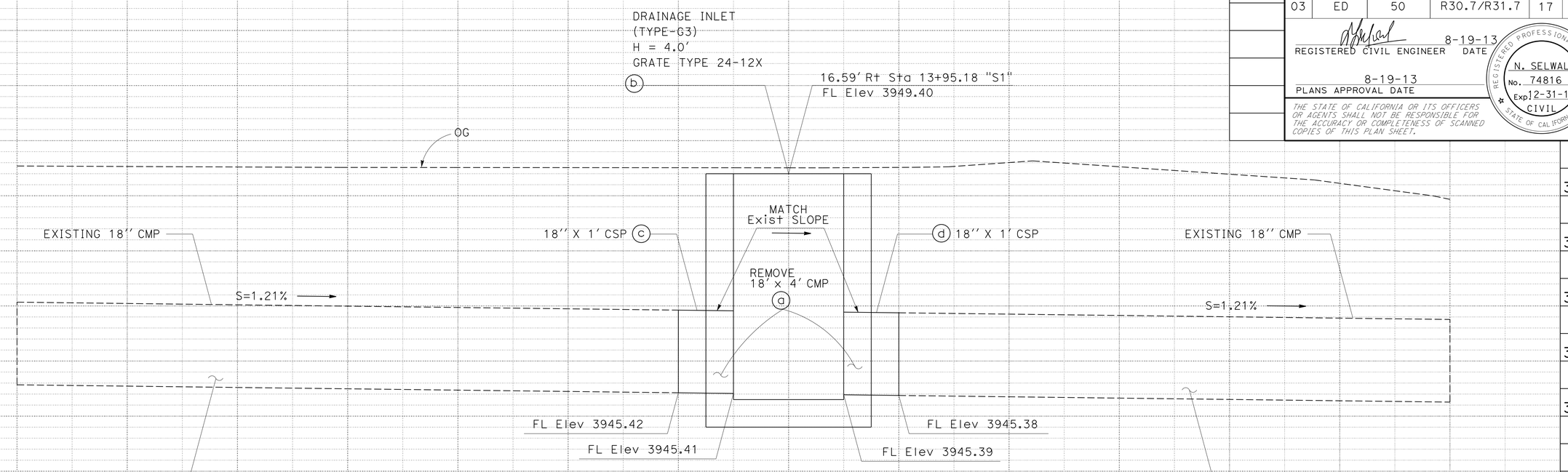

DRAINAGE SYSTEM No. 4

NOTE: DRAINAGE UNITS (f) (g) NOT SHOWN.

SEE DRAINAGE QUANTITIES SHEET FOR INFORMATION.

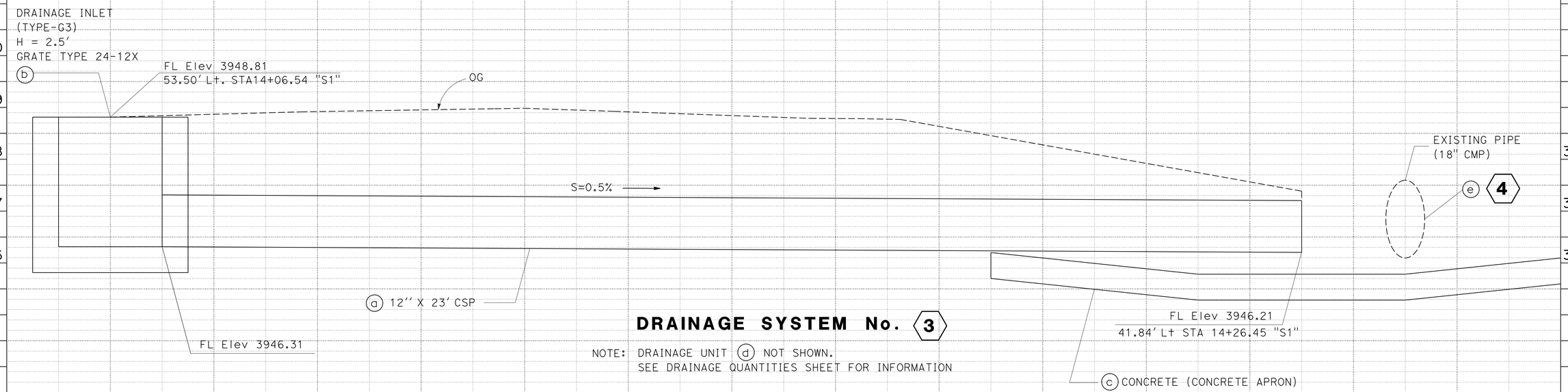

DRAINAGE SYSTEM No. 3

NOTE: DRAINAGE UNIT (d) NOT SHOWN.
SEE DRAINAGE QUANTITIES SHEET FOR INFORMATION

DRAINAGE PROFILE

SCALE: 1" = 1'

DP-2

STATION		TOTAL
CY	Exc	
	Emb	

REVISED BY | DATE REVISED

WESLEY LEE | NARAYAN SELWAL

CALCULATED-DESIGNED BY | CHECKED BY

FUNCTIONAL SUPERVISOR | NESAR FORMOLI

STATE OF CALIFORNIA - DEPARTMENT OF TRANSPORTATION
NORTH REGION
DIVISION OF ENGINEERING
Caltrans

LAST REVISION 00-00-00 | DATE PLOTTED => 23-OCT-2013 | TIME PLOTTED => 10:11

Dist	COUNTY	ROUTE	POST MILES TOTAL PROJECT	SHEET No.	TOTAL SHEETS
03	ED	50	R30.7/R31.7	18	119

REGISTERED CIVIL ENGINEER 8-19-13 DATE

8-19-13
PLANS APPROVAL DATE

REGISTERED PROFESSIONAL ENGINEER N. SELWAL No. 74816 Exp. 12-31-13 CIVIL STATE OF CALIFORNIA

THE STATE OF CALIFORNIA OR ITS OFFICERS OR AGENTS SHALL NOT BE RESPONSIBLE FOR THE ACCURACY OR COMPLETENESS OF SCANNED COPIES OF THIS PLAN SHEET.

NOTE: DETAIL A, NOT USED / INTENTIONALLY NOT SHOWN.

LEGEND

CONCRETE

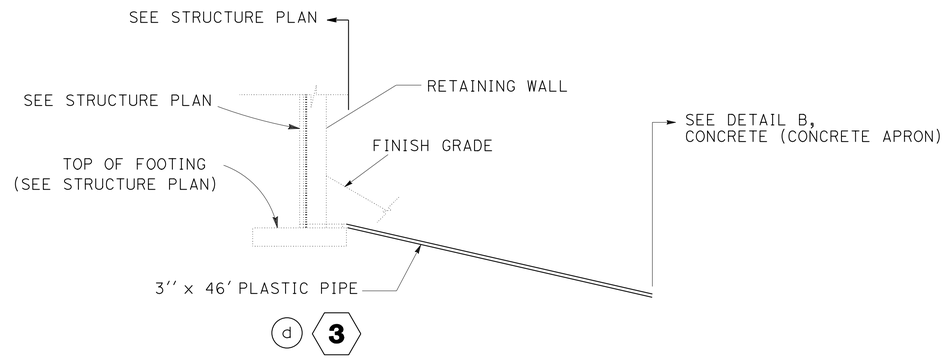

BRIDGE ABUTMENT DRAINAGE CONNECTION

DETAIL C

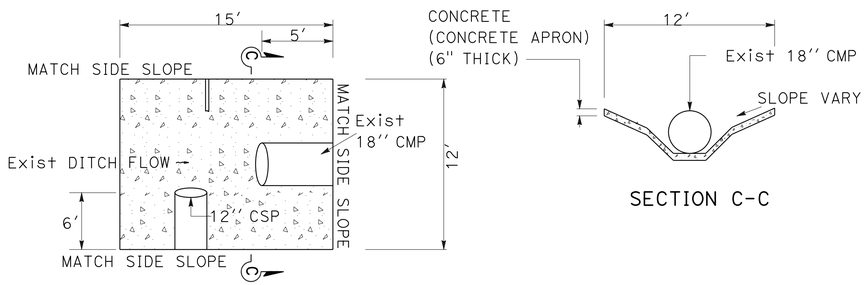

SECTION C-C

CONCRETE (CONCRETE APRON)

DETAIL B

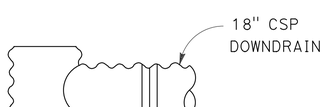

18" CSP ENERGY DISSIPATOR

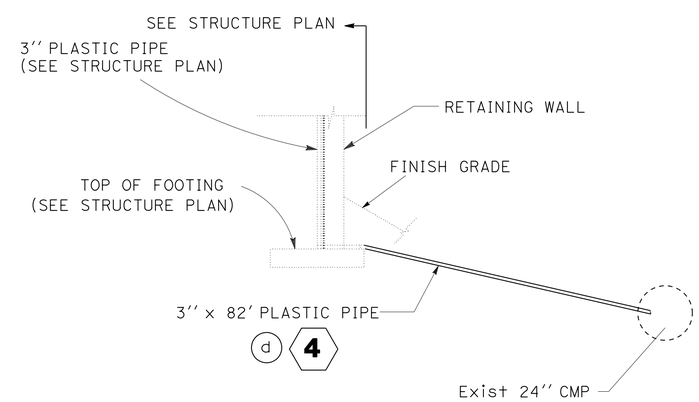

BRIDGE ABUTMENT DRAINAGE CONNECTION

DETAIL D

DRAINAGE DETAILS

NO SCALE **DD-1**

STATE OF CALIFORNIA - DEPARTMENT OF TRANSPORTATION
Caltrans
NORTH REGION
DIVISION OF ENGINEERING

FUNCTIONAL SUPERVISOR: NESAR FORMOLI

CALCULATED-DESIGNED BY: WESLEY LEE
CHECKED BY: NARAYAN SELWAL

REVISED BY | DATE REVISED

LAST REVISION 04-03-11 | DATE PLOTTED => 23-OCT-2013 | TIME PLOTTED => 10:11

Dist	COUNTY	ROUTE	POST MILES TOTAL PROJECT	SHEET No.	TOTAL SHEETS
03	ED	50	R30.7/R31.7	19	119

REGISTERED CIVIL ENGINEER 8-19-13 DATE

8-19-13
PLANS APPROVAL DATE

REGISTERED PROFESSIONAL ENGINEER N. SELWAL No. 74816 Exp. 12-31-13 CIVIL STATE OF CALIFORNIA

THE STATE OF CALIFORNIA OR ITS OFFICERS OR AGENTS SHALL NOT BE RESPONSIBLE FOR THE ACCURACY OR COMPLETENESS OF SCANNED COPIES OF THIS PLAN SHEET.

NOTES:

1. INLET BOTTOM REINFORCEMENT NOT REQUIRED. SEE STANDARD PLAN D74C FOR ALTERNATIVE REINFORCED BOTTOM AND ALTERNATIVE HALF ROUND BOTTOM.
2. STEPS - NONE REQUIRED WHERE "H" IS LESS THAN 2'-6". WHERE "H" IS 2'-6" OR MORE, INSTALL STEPS WITH LOWEST RUNG 12" ABOVE THE FLOOR AND HIGHEST RUNG NOT MORE THAN 6" BELOW TOP OF CONE SECTION OR RISER SECTION IF NO CONE SECTION USED. THE DISTANCE BETWEEN STEPS SHALL NOT EXCEED 12" AND SHALL BE UNIFORM THROUGHOUT THE LENGTH OF THE WALL. PLACE STEPS IN THE SIDE WITHOUT AN OPENING. STEPS INSERTS MAY BE SUBSTITUTED FOR THE BAR STEPS. STEP INSERTS SHALL COMPLY WITH STATE INDUSTRIAL SAFETY REQUIREMENTS. SEE STANDARD PLAN D74C AND D75C FOR STEP DETAILS.
3. JOINTS MAY BE EITHER KEYED OR TONGUE AND GROOVE.
4. FRAME SHALL BE SECURED TO GRADE RINGS WITH CEMENT MORTAR.
5. BASIN FLOORS SHALL HAVE WOOD TROWEL FINISH AND A MINIMUM SLOPE OF 1:4 FROM ALL DIRECTIONS TOWARD OUTLET PIPE.
6. MINIMUM CLEAR DISTANCE BETWEEN ALL PIPE OUTSIDE DIAMETERS AT THE MANHOLE SHALL BE THE GREATER OF: 8" OR HALF THE OUTER DIAMETER OF THE SMALLER PIPE.
7. CAST-IN-PLACE MANHOLE WALLS MAY BE APPROVED BY THE ENGINEER. ALL CAST-IN-PLACE MANHOLES MUST BE FORMED IN A CIRCULAR SHAPE CONSISTENT WITH THE DIAMETER SPECIFIED ON THE PLANS AND REQUIRED TO FIT UPPER PRECAST SECTIONS. PRECAST RINGS SHALL BE SET WET OR REQUIRED KEY FORM SHALL BE INCLUDED IN THE FORM WORK TO ACCEPT THE PRECAST KEY.CONCRETE SHALL BE CONSOLIDATED BY A ACCEPTABLE METHOD TO ENSURE ALL VOIDS ARE REMOVED.
8. THE MANHOLE FRAME AND COVER SHALL BE MADE OF GRAY CAST IRON. MASS FOR PAYMENT IS 435 LBS. SEE STANDARD PLAN B7-11 FOR DETAILS.
9. ALL PARTS OF THE MANHOLE FRAME AND COVER EXCEPT MACHINED SURFACES SHALL BE COATED WITH ASPHALTUM PAINT.
10. THE MANHOLE FRAME AND COVER SHALL BE TESTED FOR ACCURACY OF FIT AND SHALL BE MARKED IN SETS BEFORE DELIVERY. THE COVER SHALL FIT THE FRAME SNUGLY BUT NOT TIGHTLY.

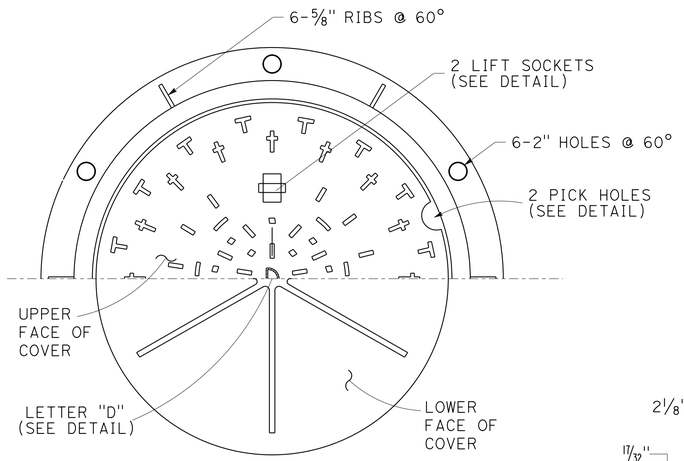

HALF PLAN OF MH FRAME AND COVER

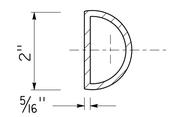

LETTER "D" DETAIL

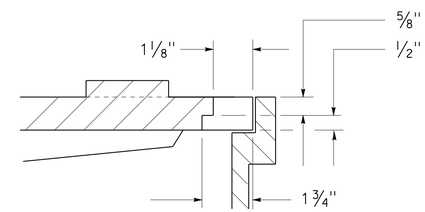

PICK HOLE DETAIL

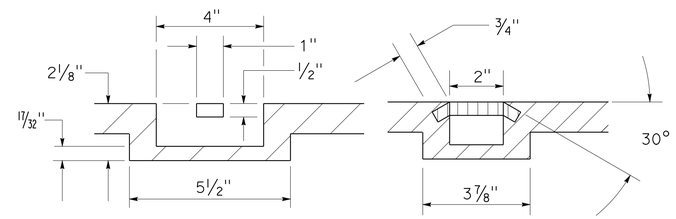

LIFT SOCKET DETAIL

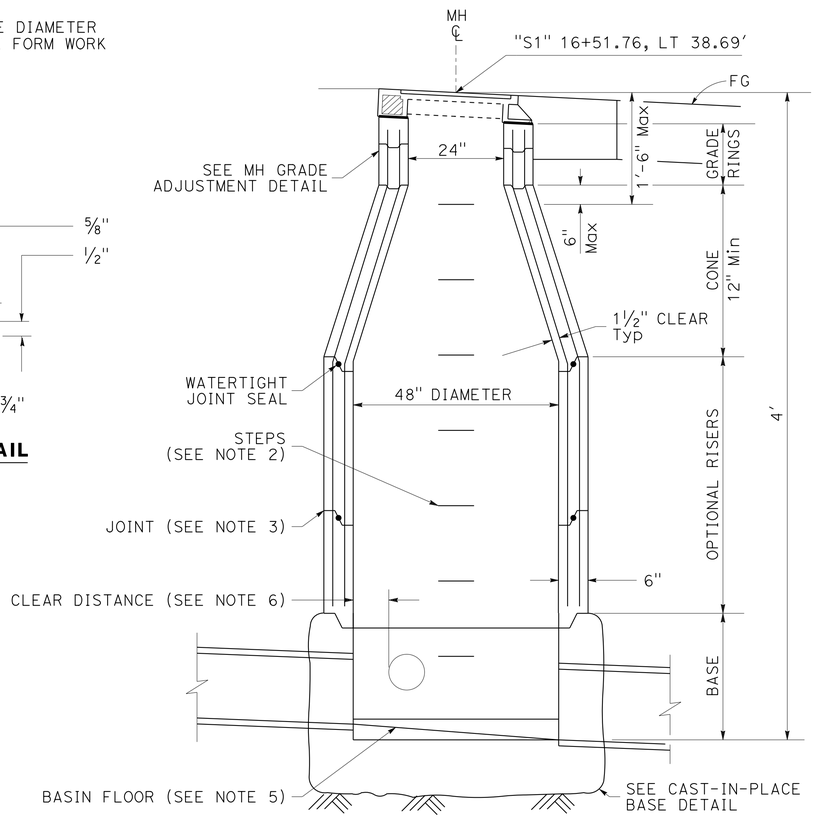

MH ELEVATION

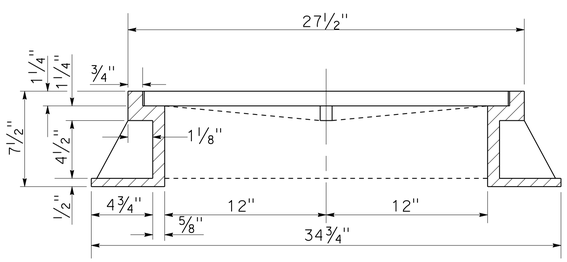

SECTION ON ℄ THROUGH FRAME

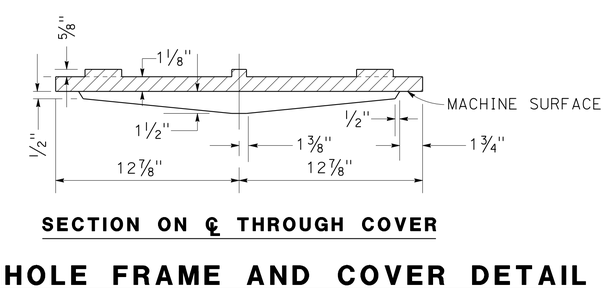

SECTION ON ℄ THROUGH COVER

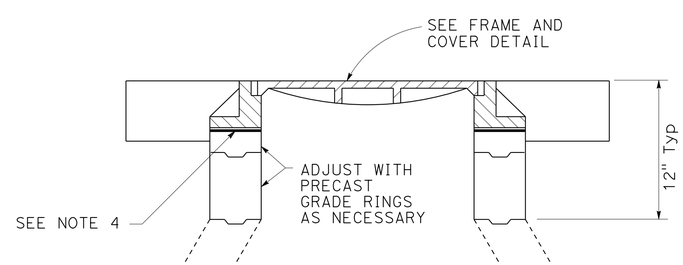

MH GRADE ADJUSTMENT DETAIL

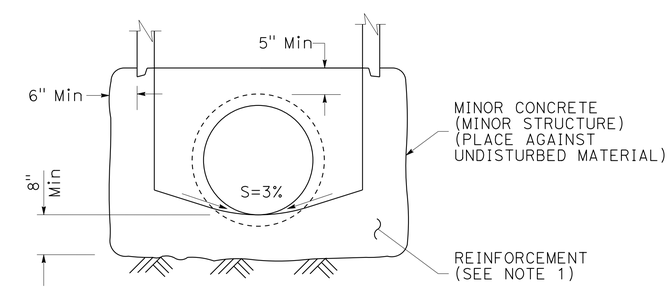

CAST-IN-PLACE BASE

MANHOLE FRAME AND COVER DETAIL

DRAINAGE DETAILS

NO SCALE **DD-2**

STATE OF CALIFORNIA - DEPARTMENT OF TRANSPORTATION
NORTH REGION
DIVISION OF ENGINEERING
Caltrans

FUNCTIONAL SUPERVISOR: NESAR FORMOLI
CALCULATED-DESIGNED BY: WESLEY LEE
CHECKED BY: NARAYAN SELWAL
REVISED BY
DATE REVISED

LAST REVISION 00-00-00
DATE PLOTTED => 23-OCT-2013
TIME PLOTTED => 10:12

Dist	COUNTY	ROUTE	POST MILES TOTAL PROJECT	SHEET No.	TOTAL SHEETS
03	ED	50	R30.7/R31.7	20	119

REGISTERED CIVIL ENGINEER 8-19-13 DATE

8-19-13
PLANS APPROVAL DATE

REGISTERED PROFESSIONAL ENGINEER N. SELWAL No. 74816 Exp 12-31-13 CIVIL STATE OF CALIFORNIA

THE STATE OF CALIFORNIA OR ITS OFFICERS OR AGENTS SHALL NOT BE RESPONSIBLE FOR THE ACCURACY OR COMPLETENESS OF SCANNED COPIES OF THIS PLAN SHEET.

NOTES:
1. ALL CULVERT JOINTS SHALL BE POSITIVE.
2. LENGTHS OF PIPES, DOWNDRAINS AND ANGLES OF ELBOWS SHALL BE VERIFIED IN THE FIELD BY THE CONTRACTOR.
3. PLASTIC PIPE SHALL BE SMOOTH INTERIOR WALL TYPE WITH WATER TIGHT JOINTS.

DRAINAGE QUANITITES

DRAINAGE SYSTEM No.	DRAINAGE UNIT	12" CURED-IN-PLACE PIPE LINER	18" CURED-IN-PLACE PIPE LINER	24" CURED-IN-PLACE PIPE LINER	REMOVE INLET	REMOVE PIPE	18" CSP (.109" THICK)	12" STEEL FLARED END SECTION	48" PRECAST CONCRETE PIPE MAN HOLE	12" CSP	18" CSP ENERGY DISSIPATOR (0.64" THICK)	REMOVE DOWNDRAIN	18" CSP DOWNDRAIN (.109" THICK)	3" PLASTIC PIPE	CONCRETE (CONCRETE APRON)	MINOR CONCRETE (MINOR STRUCTURE)	MISCELLANEOUS IRON & STEEL	INLET TYPE	DRAINAGE INLET FRAME AND GRATE TYPE	CLEANING, INSPECTING, AND PREPARING CULVERT	REMARKS	DRAINAGE SYSTEM No.	DRAINAGE UNIT
		LF	LF	LF	EA	LF	LF	EA	EA	LF	EA	EA	LF	LF	CY	CY	LB	(N)	(N)	LF			
1	a			85																85		1	a
	b	11																		11			b
	c				1																		c
	d															1.32	239	G-3	24-12X		DRAINAGE INLET (TYPE-G3), H=4.4′		d
2	a				1																	2	a
	b						6																b
	c					4																	c
	d								1												H=4.0′		d
	e		68																	68			e
	f		80																	80			f
	g															1.25	239	G-3	24-12X		DRAINAGE INLET (TYPE-G3), H=4.0′		g
	h						5																h
	i									12													i
	j					23																	j
	k							1															k
3	a									23												3	a
	b															1.03	239	G-3	24-12X		DRAINAGE INLET (TYPE-G3), H=2.5′		b
	c														3.5								c
	d													46									d
4	a					4																4	a
	b															1.25	239	G-3	24-12X		DRAINAGE INLET (TYPE-G3), H=4.0′		b
	c						1																c
	d						1																d
	e		84																	84			e
	f													82									f
	g			214																214			g
5	a											1										5	a
	b												67										b
	c										1												c
6	a											1										6	a
	b												70										b
	c										1												c
7	a												52									7	a
	b										1												b
SUBTOTAL		11	232	299	2	31	13	1	1	35	3	2	189	128	3.5	4.85	956			542			
TOTAL		11	232	299	2	31	13	1	1	35	3	2	189	128	3.5	4.85	956			542			

(N) - NOT A SEPARATE PAY ITEM, FOR INFORMATION ONLY

DRAINAGE QUANITIES

DQ-1

STATE OF CALIFORNIA - DEPARTMENT OF TRANSPORTATION
Caltrans
NORTH REGION
DIVISION OF ENGINEERING

FUNCTIONAL SUPERVISOR: NESAR FORMOLI
CALCULATED-DESIGNED BY: WESLEY LEE
CHECKED BY: NARAYAN SELWAL
REVISED BY
DATE REVISED

LAST REVISION 00-00-00
DATE PLOTTED => 23-OCT-2013
TIME PLOTTED => 10:12

Dist	COUNTY	ROUTE	POST MILES TOTAL PROJECT	SHEET No.	TOTAL SHEETS
03	ED	50	R30.7/R31.7	21	119

Russell F. Petty 7-24-13
REGISTERED CIVIL ENGINEER DATE

8-19-13
PLANS APPROVAL DATE

REGISTERED PROFESSIONAL ENGINEER
RUSSELL F. PETTY
No. 72008
Exp. 06-30-14
CIVIL
STATE OF CALIFORNIA

THE STATE OF CALIFORNIA OR ITS OFFICERS OR AGENTS SHALL NOT BE RESPONSIBLE FOR THE ACCURACY OR COMPLETENESS OF SCANNED COPIES OF THIS PLAN SHEET.

NOTES:

1. FOR ACCURATE RIGHT OF WAY DATA, CONTACT RIGHT OF WAY ENGINEERING AT THE DISTRICT OFFICE.
2. NOT ALL UTILITIES OUTSIDE OF THE STATE RIGHT OF WAY ARE SHOWN.

ABBREVIATIONS:

EID = EL DORADO IRRIGATION DISTRICT
PH = POTHOLE

LEGEND:

POTHOLE LOCATION

UTILITY/OWNERSHIP:

TELEPHONE/AMERICAN TELEPHONE & TELEGRAPH (AT&T)
WATER/EL DORADO IRRIGATION DISTRICT (EID)
ELECTRIC/PACIFIC GAS & ELECTRIC (PG&E)
TELEVISION, HIGH SPEED INTERNET/COMCAST COMMUNICATIONS (COMCAST)

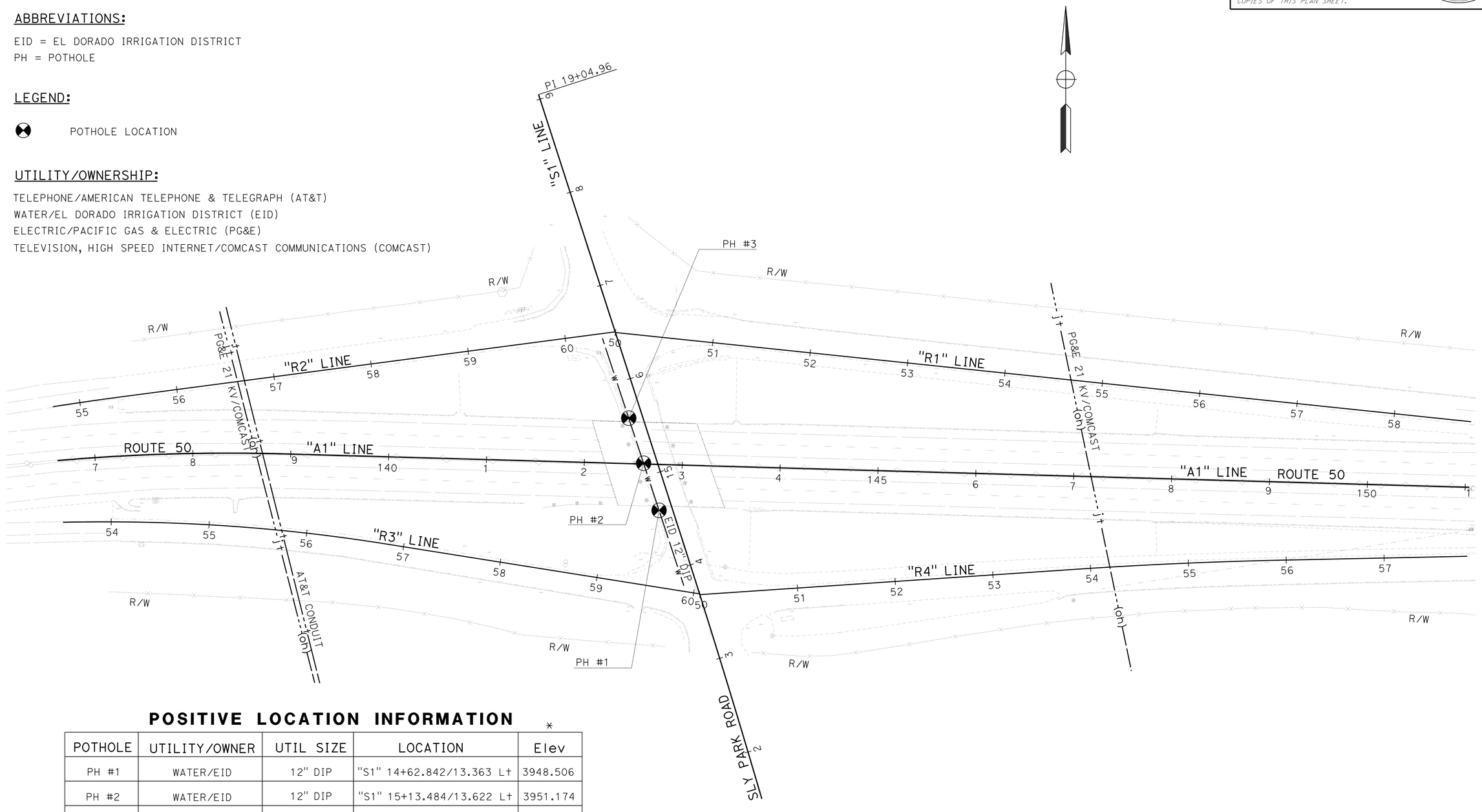

POSITIVE LOCATION INFORMATION

POTHOLE	UTILITY/OWNER	UTIL SIZE	LOCATION	Elev *
PH #1	WATER/EID	12" DIP	"S1" 14+62.842/13.363 Lt	3948.506
PH #2	WATER/EID	12" DIP	"S1" 15+13.484/13.622 Lt	3951.174
PH #3	WATER/EID	12" DIP	"S1" 15+61.971/13.480 Lt	3953.143

* ELEVATION IS TO TOP OF PIPE

APPROVED FOR UTILITY INFORMATION ONLY

UTILITY PLAN

SCALE : 1" = 50'

U-1

STATE OF CALIFORNIA - DEPARTMENT OF TRANSPORTATION
Caltrans
NORTH REGION
DIVISION OF ENGINEERING

FUNCTIONAL SUPERVISOR: CHARLES W. LAUGHLIN
CALCULATED-DESIGNED BY: OLAWALE AJAYI
CHECKED BY: RUSSELL F. PETTY
REVISED BY
DATE REVISED

LAST REVISION 7-24-13
DATE PLOTTED => 23-OCT-2013
TIME PLOTTED => 10:12

Dist	COUNTY	ROUTE	POST MILES TOTAL PROJECT	SHEET No.	TOTAL SHEETS
03	ED	50	R30.7/R31.7	22	119

REGISTERED CIVIL ENGINEER 8-19-13 DATE

8-19-13
PLANS APPROVAL DATE

REGISTERED PROFESSIONAL ENGINEER N. SELWAL No. 74816 Exp 12-31-13 CIVIL STATE OF CALIFORNIA

THE STATE OF CALIFORNIA OR ITS OFFICERS OR AGENTS SHALL NOT BE RESPONSIBLE FOR THE ACCURACY OR COMPLETENESS OF SCANNED COPIES OF THIS PLAN SHEET.

STATIONARY MOUNTED CONSTRUCTION AREA SIGNS

SIGN LETTER	SIGN CODE FEDERAL	SIGN CODE CALIFORNIA	PANEL SIZE	SIGN MESSAGE	NUMBER OF POST AND SIZE	NUMBER OF SIGNS
A	W20-1		48" X 48"	ROAD WORK AHEAD	1 - 6" X 6"	4
B		C40(MOD)	96" X 60"	TRAFFIC FINES DOUBLED IN WORK ZONES	2 - 6" X 6"	2
C	G20-2		36" X 18"	END ROAD WORK	1 - 4" X 4"	4
D	W20-1		60" X 60"	ROAD WORK AHEAD	2 - 4" X 6"	2
E		C14	48" X 24"	END ROAD WORK	1 - 4" X 6"	2

NOTES:
1. EXACT CONSTRUCTION AREA SIGN LOCATION TO BE DETERMINED BY THE ENGINEER.
2. FOR ADDITIONAL STATIONARY MOUNTED CONSTRUCTION AREA SIGNS, SEE SHEET THQ-2, DE-1.

LEGEND

(X) CONSTRUCTION AREA SIGN LETTER

<CA> CALIFORNIA SIGN CODE

(B) C40(Mod)<CA>

TRAFFIC FINES
DOUBLED IN
WORK ZONES

8" D SERIES LETTERS

96"x60"

RETROREFLECTIVE WHITE BACKGROUND WITH BLACK LEGEND AND BORDER.

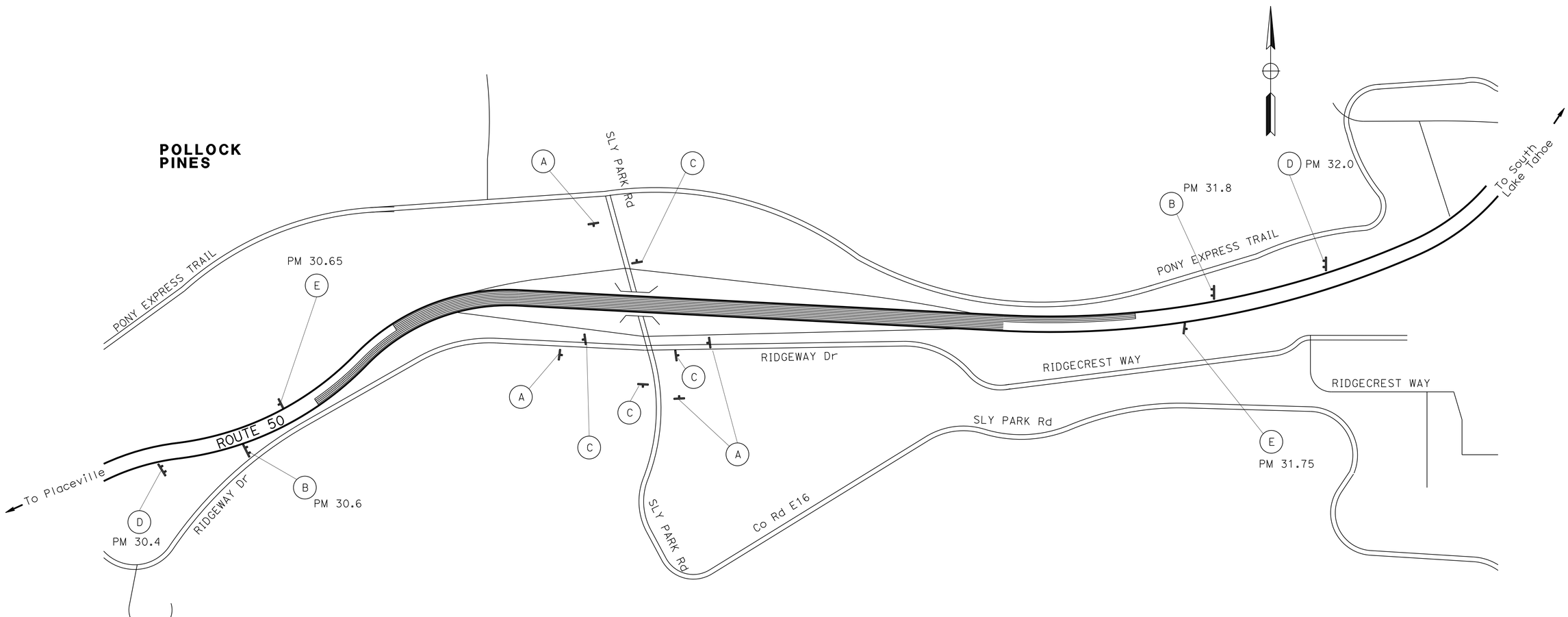

CONSTRUCTION AREA SIGNS

NO SCALE

CS-1

APPROVED FOR CONSTRUCTION AREA SIGN WORK ONLY

STATE OF CALIFORNIA - DEPARTMENT OF TRANSPORTATION
NORTH REGION DIVISION OF ENGINEERING
Caltrans

FUNCTIONAL SUPERVISOR: NESAR FORMOLI
CALCULATED-DESIGNED BY: WESLEY LEE
CHECKED BY: NARAYAN SELWAL
REVISED BY
DATE REVISED

LAST REVISION 00-00-00
DATE PLOTTED => 23-OCT-2013
TIME PLOTTED => 10:12

Dist	COUNTY	ROUTE	POST MILES TOTAL PROJECT	SHEET No.	TOTAL SHEETS
03	ED	50	R30.7/R31.7	23	119

REGISTERED CIVIL ENGINEER 8-19-13 DATE

8-19-13
PLANS APPROVAL DATE

REGISTERED PROFESSIONAL ENGINEER N. SELWAL No. 74816 Exp 12-31-13 CIVIL STATE OF CALIFORNIA

THE STATE OF CALIFORNIA OR ITS OFFICERS OR AGENTS SHALL NOT BE RESPONSIBLE FOR THE ACCURACY OR COMPLETENESS OF SCANNED COPIES OF THIS PLAN SHEET.

NOTES:

1. INDEX NOTES DO NOT REPRESENT AN ORDER OF WORK AS INDICATED.
2. ALL CHANNELZIERS (SURFACE MOUNTED) SHALL BE INSTALLED ON 50′ CENTERS UNLESS OTHERWISE SHOWN.
3. ALL TRAFFIC PLASTIC DRUMS SHALL BE INSTALLED ON 25′ CENTERS UNLESS OTHERWISE SHOWN.
4. FOR ADDITIONAL STATIONARY MOUNTED CONSTRUCTION AREA SIGNS, SEE SHEETS CS-1, DE-1 & THQ-2.
5. ALL SIGN CODES SHOWN ARE FEDERAL SIGN CODES UNLESS OTHERWISE DESIGNATED AS CALIFORNIA SIGN CODES.
6. SEE SUMMARY OF QUANTITIES SHEET FOR REMOVE CONCRETE BARRIER QUANTITY.
7. ALL STATION OFFSETS ARE FROM "A1" LINE UNLESS OTHERWISE NOTED.

LEGEND:

- CONSTRUCTION THIS STAGE
- NO/P — PAVEMENT DELINEATION DETAIL NUMBER P=PAINT
- DIRECTION OF TRAFFIC THIS STAGE
- CHANGE IN STRIPING PATTERN
- X — CONSTRUCTION AREA SIGN LETTER
- X — ROADSIDE SIGN NUMBER
- CHANNELIZER (SURFACE MOUNTED)
- TEMPORARY RAILING (TYPE K)
- SIGN-SINGLE POST
- <CA> — CALIFORNIA SIGN CODE
- TYPE 1 (24′) ARROW
- Type V ARROW
- Type VI ARROW
- PLASTIC TRAFFIC DRUMS
- TYPE III BARRICADE

ABBREVIATIONS:

RPM	REMOVE PAVEMENT MARKING
S	"STOP" PAVEMENT MARKING
A	"AHEAD" TEMPORARY PAVEMENT MARKING
MSG	MIDWEST GUARDRAIL SYSTEM

STAGE 1

THE INTENT OF THIS STAGE IS TO REMOVE A PORTION OF THE EXISTING BRIDGE ON SOUTH SIDE OF THE HIGHWAY AND TO BUILD THE SAME PORTION FOR THE NEW BRIDGE. TRAFFIC IN BOTH DIRECTIONS WILL BE DETOURED TO WEST BOUND SIDE OF THE HIGHWAY. ONE LANE IN EACH DIRECTION WILL REMAIN OPEN.
SLY PARK ROAD WILL BE COMPLETELY CLOSED DURING REMOVAL OF EXISTING BRIDGE (5 NIGHTS) AND DURING ERECTION OF GIRDERS FOR NEW BRIDGE (5 NIGHTS). TRAFFIC WILL BE DETOURED FROM SLY PARK ROAD FOR THAT PERIOD OF TIME. SEE SLY PARK ROAD DETOUR PLAN SHEET DE-1 & DE-2.

STAGE 1 CONSTRUCTION (WORK TO BE PERFORMED):

- A1 CONSTRUCT CROSS OVER USING TEMPORARY RAILING (TYPE K) AND TEMPORARY CRASH CUSHION (TYPE ABSORB 350) AS SHOWN
- A2 DISMANTLE AND REMOVE SOUTH SIDE OF THE EXISTING BRIDGE AS SHOWN IN STRUCTURE PLANS
- A3 CONSTRUCT SOUTH SIDE OF NEW BRIDGE AS SHOWN IN STRUCTURE PLANS.
- A4 CONSTRUCT TYPE 732 (Mod) BARRIER, MGS, TERMINAL SYSTEM, AND DOWNDRAINS
- A5 CONSTRUCT SHOULDER WIDENING
- A6 OVERLAY PAVEMENT TO CONFORM TO THE NEW BRIDGE

STAGE 2

THE INTENT OF THIS STAGE IS TO REMOVE REMAINING PORTION OF THE EXISTING BRIDGE AND TO BUILD THE SAME PORTION FOR THE NEW BRIDGE. TRAFFIC IN BOTH DIRECTIONS WILL BE DETOURED TO THE NEWLY CONSTRUCTED BRIDGE IN STAGE 1. ONE LANE IN EACH DIRECTION WILL REMAIN OPEN.
AS MENTIONED IN STAGE 1, SLY PARK ROAD WILL BE COMPLETELY CLOSED DURING ROMOVAL OF EXISTING BRIDGE (5 NIGHTS) AND DURING ERECTION OF GIRDERS FOR THE NEW BRIDGE (5 NIGHTS). TRAFFIC WILL BE DETOURED FROM SLY PARK ROAD FOR THAT PERIOD OF TIME. SEE SLY PARK ROAD DETOUR PLAN SHEET DE-1 & DE-2.

STAGE 2 CONSTRUCTION (WORK TO BE PERFORMED):

- B1 MODIFY CROSS OVER USING TEMPORARY RAILING (TYPE K) AND TEMPORARY CRASH CUSHION (TYPE ABSORB 350) AS SHOWN
- B2 DISMANTLE AND REMOVE REMAINING PORTION OF THE EXISTING BRIDGE
- B3 CONSTRUCT NORTH SIDE OF NEW BRIDGE AS SHOWN IN STRUCTURE PLANS
- B4 CONSTRUCT TYPE 732 (Mod) BARRIER, MGS, TERMINAL SYSTEM, AND DOWNDRAINS
- B5 OVERLAY PAVEMENT TO CONFORM TO THE NEW BRIDGE

STAGE 3

THE INTENT OF THIS STAGE IS TO CONSTRUCT CONCRETE BARRIER (TYPE 60), COLD PLAN AC Pvmt AND OVERLAY PAVEMENT, ADD FINAL STRIPING AND SIGNING ON ROUTE 50. SIMILARLY, THE INTENT IS TO COMPLETE CONSTRUCTION ON SLY PARK ROAD INCLUDING SIDEWALKS, CURB RAMPS, DRAINAGE & PAVEMENT WORK. ONE-WAY REVERSIBLE TRAFFIC CONTROL WITH FLAGGERS WILL BE USED AS NEEDED, FOR SLY PARK ROAD.

STAGE 3 CONSTRUCTION (WORK TO BE PERFORMED):

ROUTE 50:

- C1 COLD PLANE EXISTING PAVEMENT AND OVERLAY WITH HMA (TYPE A) AS SHOWN IN LAYOUT PLANS
- C2 FINAL STRIPING, SIGNING, AND DELINEATION
- C3 PLACE TEMPORARY RAILING (TYPE K), AND TEMPORARY CRASH CUSHION (TYPE ABSORB 350) AS SHOWN
- C4 CONSTRUCT CONCRETE BARRIER (TYPE 60)

SLY PARK ROAD:

- C5 CONSTRUCT DRAINAGE SYSTEMS.
- C6 WIDEN THE SHOULDERS & CONSTRUCT SIDEWALKS AND CURB RAMPS
- C7 PLACE LANDCAPING ITEMS
- C8 HMA (TYPE A) OVERLAY, FINAL STRIPING AND SIGNING

INDEX SHEET
STAGE CONSTRUCTION AND TRAFFIC HANDLING PLAN

SC-1

REVISED BY | DATE REVISED
CHUCK COOK | NARAYAN SELWAL
CALCULATED-DESIGNED BY | CHECKED BY
FUNCTIONAL SUPERVISOR | NESAR FORMOLI
STATE OF CALIFORNIA - DEPARTMENT OF TRANSPORTATION
Caltrans
NORTH REGION DIVISION OF ENGINEERING

LAST REVISION 00-00-00 | DATE PLOTTED => 23-OCT-2013 | TIME PLOTTED => 10:12

Dist	COUNTY	ROUTE	POST MILES TOTAL PROJECT	SHEET No.	TOTAL SHEETS
03	ED	50	R30.7/R31.7	24	119

REGISTERED CIVIL ENGINEER 8-19-13 DATE

8-19-13
PLANS APPROVAL DATE

REGISTERED PROFESSIONAL ENGINEER
N. SELWAL
No. 74816
Exp 12-31-13
CIVIL
STATE OF CALIFORNIA

THE STATE OF CALIFORNIA OR ITS OFFICERS OR AGENTS SHALL NOT BE RESPONSIBLE FOR THE ACCURACY OR COMPLETENESS OF SCANNED COPIES OF THIS PLAN SHEET.

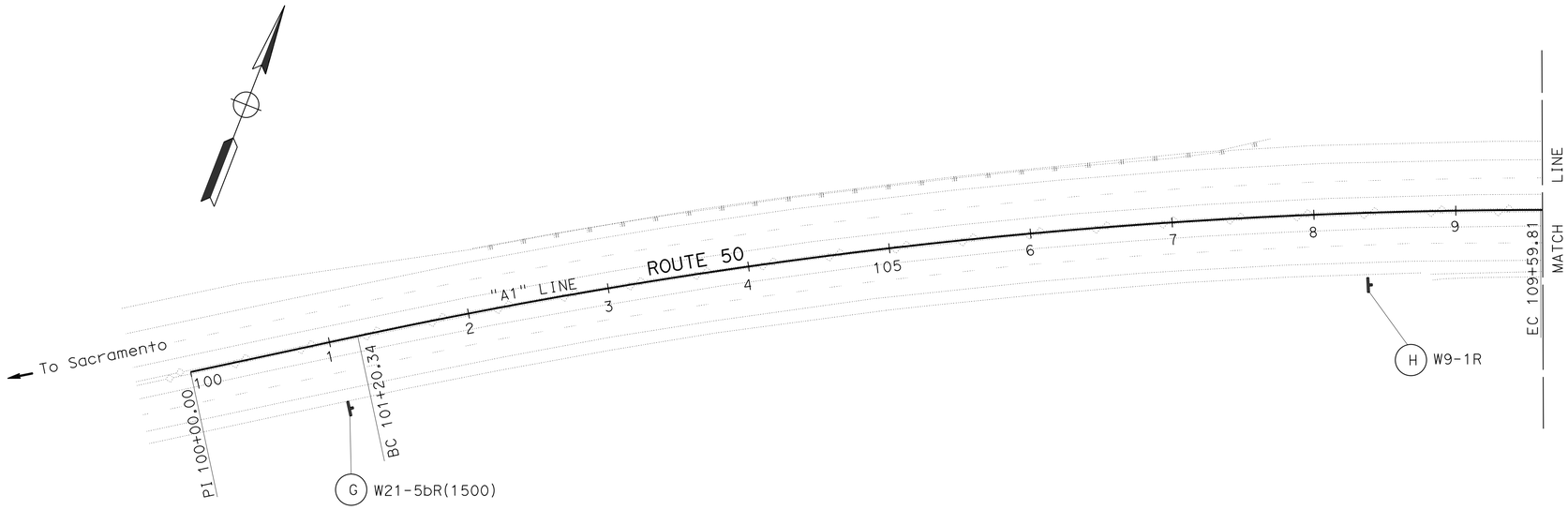

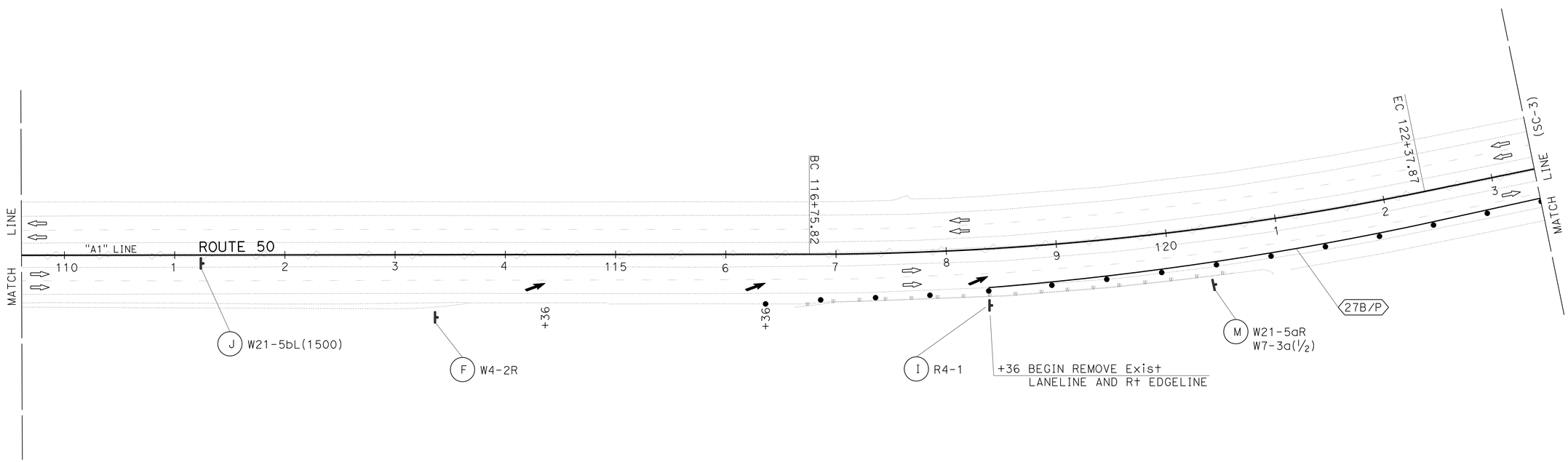

APPROVED FOR STAGE CONSTRUCTION AND TRAFFIC HANDLING WORK ONLY

STAGE 1
STAGE CONSTRUCTION AND TRAFFIC HANDLING PLAN
SC-2

STATE OF CALIFORNIA - DEPARTMENT OF TRANSPORTATION
Caltrans
NORTH REGION
DIVISION OF ENGINEERING

FUNCTIONAL SUPERVISOR: NESAR FORMOLI
CALCULATED-DESIGNED BY: NARAYAN SELWAL
CHECKED BY: CHUCK COOK
REVISED BY
DATE REVISED

LAST REVISION 00-00-00
DATE PLOTTED => 23-OCT-2013
TIME PLOTTED => 10:12

Dist	COUNTY	ROUTE	POST MILES TOTAL PROJECT	SHEET No.	TOTAL SHEETS
03	ED	50	R30.7/R31.7	25	119

REGISTERED CIVIL ENGINEER 8-19-13 DATE

8-19-13
PLANS APPROVAL DATE

REGISTERED PROFESSIONAL ENGINEER N. SELWAL No. 74816 Exp. 12-31-13 CIVIL STATE OF CALIFORNIA

THE STATE OF CALIFORNIA OR ITS OFFICERS OR AGENTS SHALL NOT BE RESPONSIBLE FOR THE ACCURACY OR COMPLETENESS OF SCANNED COPIES OF THIS PLAN SHEET.

NOTE:

DETAIL 36 TO BE PLACED WITHOUT RETROREFLECTIVE PAVEMENT MARKERS.

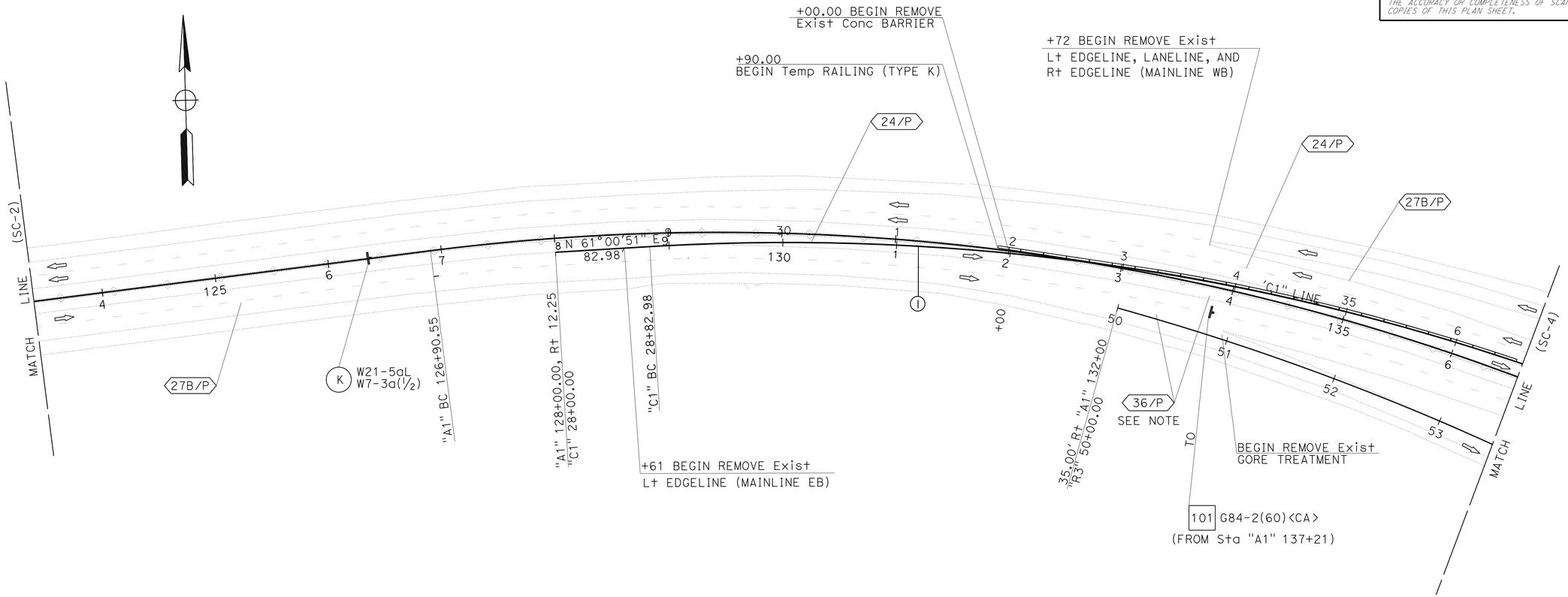

CURVE DATA

No.	R	△	T	L	ALIGNMENT
1	2010′	30°31′36″	548.49′	1070.91′	C1

APPROVED FOR STAGE CONSTRUCTION AND TRAFFIC HANDLING WORK ONLY

STAGE 1
STAGE CONSTRUCTION AND TRAFFIC HANDLING PLAN
SC-3

STATE OF CALIFORNIA - DEPARTMENT OF TRANSPORTATION
Caltrans
NORTH REGION
DIVISION OF ENGINEERING

FUNCTIONAL SUPERVISOR: NESAR FORMOLI
CALCULATED-DESIGNED BY: NARAYAN SELWAL
CHECKED BY: CHUCK COOK
REVISED BY
DATE REVISED

LAST REVISION 00-00-00
DATE PLOTTED => 23-OCT-2013
TIME PLOTTED => 10:12

Dist	COUNTY	ROUTE	POST MILES TOTAL PROJECT	SHEET No.	TOTAL SHEETS
03	ED	50	R30.7/R31.7	26	119

REGISTERED CIVIL ENGINEER 8-19-13 DATE

8-19-13
PLANS APPROVAL DATE

REGISTERED PROFESSIONAL ENGINEER N. SELWAL No. 74816 Exp 12-31-13 CIVIL STATE OF CALIFORNIA

THE STATE OF CALIFORNIA OR ITS OFFICERS OR AGENTS SHALL NOT BE RESPONSIBLE FOR THE ACCURACY OR COMPLETENESS OF SCANNED COPIES OF THIS PLAN SHEET.

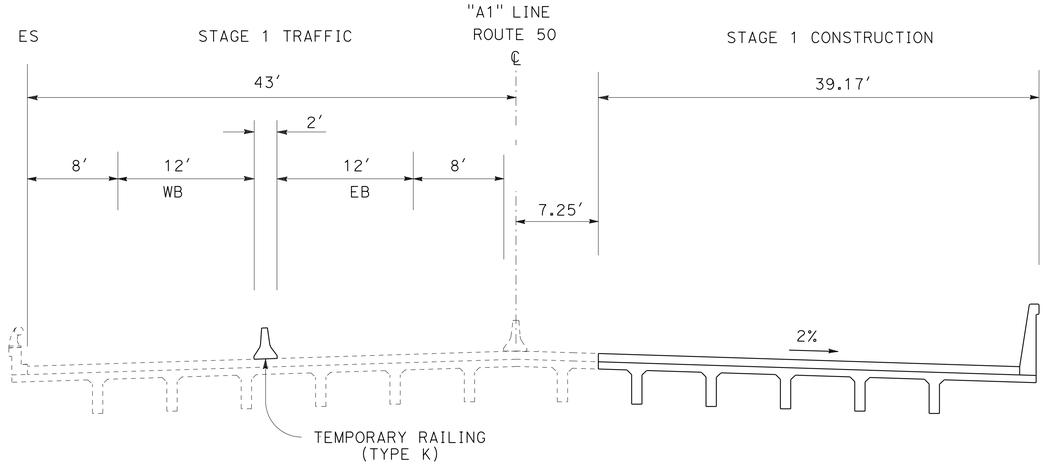

TYPICAL SECTION AT BRIDGE
AT BRIDGE

CURVE DATA

No.	R	Δ	T	L	ALIGNMENT
1	2010′	30°31′36"	548.49′	1070.91′	C1
2	4012′	04°53′46"	171.52′	342.83′	C1
3	4800′	04°41′59"	196.98′	393.73′	C1

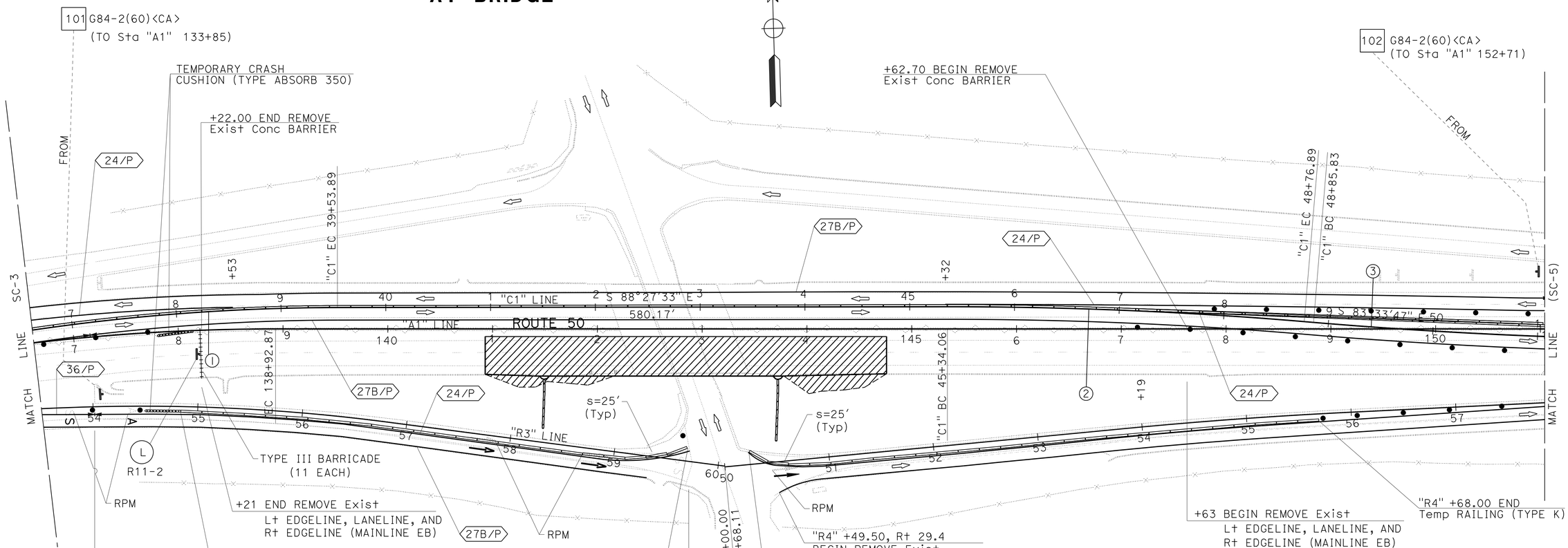

APPROVED FOR STAGE CONSTRUCTION AND TRAFFIC HANDLING WORK ONLY

STAGE 1
STAGE CONSTRUCTION AND TRAFFIC HANDLING PLAN

SC-4

REVISED BY	DATE REVISED

CALCULATED-DESIGNED BY: CHUCK COOK
CHECKED BY: NARAYAN SELWAL
FUNCTIONAL SUPERVISOR: NESAR FORMOLI

STATE OF CALIFORNIA - DEPARTMENT OF TRANSPORTATION
Caltrans
NORTH REGION
DIVISION OF ENGINEERING

LAST REVISION 00-00-00 | DATE PLOTTED => 23-OCT-2013 | TIME PLOTTED => 10:12

Dist	COUNTY	ROUTE	POST MILES TOTAL PROJECT	SHEET No.	TOTAL SHEETS
03	ED	50	R30.7/R31.7	27	119

REGISTERED CIVIL ENGINEER 8-19-13 DATE

8-19-13
PLANS APPROVAL DATE

REGISTERED PROFESSIONAL ENGINEER N. SELWAL No. 74816 Exp. 12-31-13 CIVIL STATE OF CALIFORNIA

THE STATE OF CALIFORNIA OR ITS OFFICERS OR AGENTS SHALL NOT BE RESPONSIBLE FOR THE ACCURACY OR COMPLETENESS OF SCANNED COPIES OF THIS PLAN SHEET.

NOTE:

DETAIL 36 TO BE PLACED WITHOUT RETROREFLECTIVE PAVEMENT MARKERS.

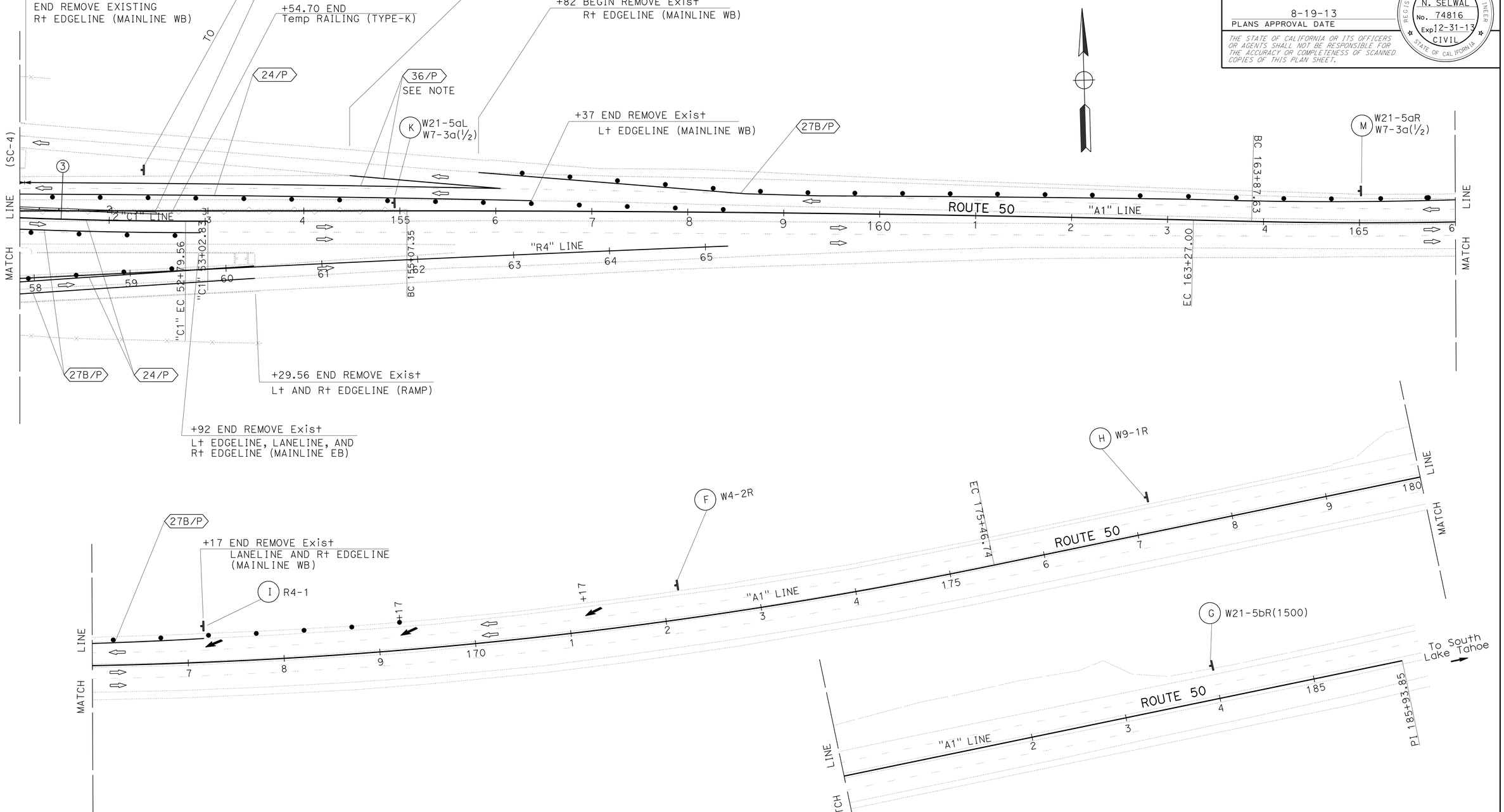

CURVE DATA

No.	R	Δ	T	L	ALIGNMENT
3	4800′	04°41′59"	196.98′	393.73′	C1

APPROVED FOR STAGE CONSTRUCTION AND TRAFFIC HANDLING WORK ONLY

STAGE 1
STAGE CONSTRUCTION AND TRAFFIC HANDLING PLAN

SC-5

STATE OF CALIFORNIA - DEPARTMENT OF TRANSPORTATION
Caltrans
NORTH REGION
DIVISION OF ENGINEERING

FUNCTIONAL SUPERVISOR: NESAR FORMOLI
CALCULATED-DESIGNED BY: CHUCK COOK
CHECKED BY: NARAYAN SELWAL
REVISED BY
DATE REVISED

LAST REVISION 00-00-00
DATE PLOTTED => 23-OCT-2013
TIME PLOTTED => 10:12

Dist	COUNTY	ROUTE	POST MILES TOTAL PROJECT	SHEET No.	TOTAL SHEETS
03	ED	50	R30.7/R31.7	28	119

REGISTERED CIVIL ENGINEER 8-19-13 DATE

PLANS APPROVAL DATE 8-19-13

REGISTERED PROFESSIONAL ENGINEER N. SELWAL No. 74816 Exp 12-31-13 CIVIL STATE OF CALIFORNIA

THE STATE OF CALIFORNIA OR ITS OFFICERS OR AGENTS SHALL NOT BE RESPONSIBLE FOR THE ACCURACY OR COMPLETENESS OF SCANNED COPIES OF THIS PLAN SHEET.

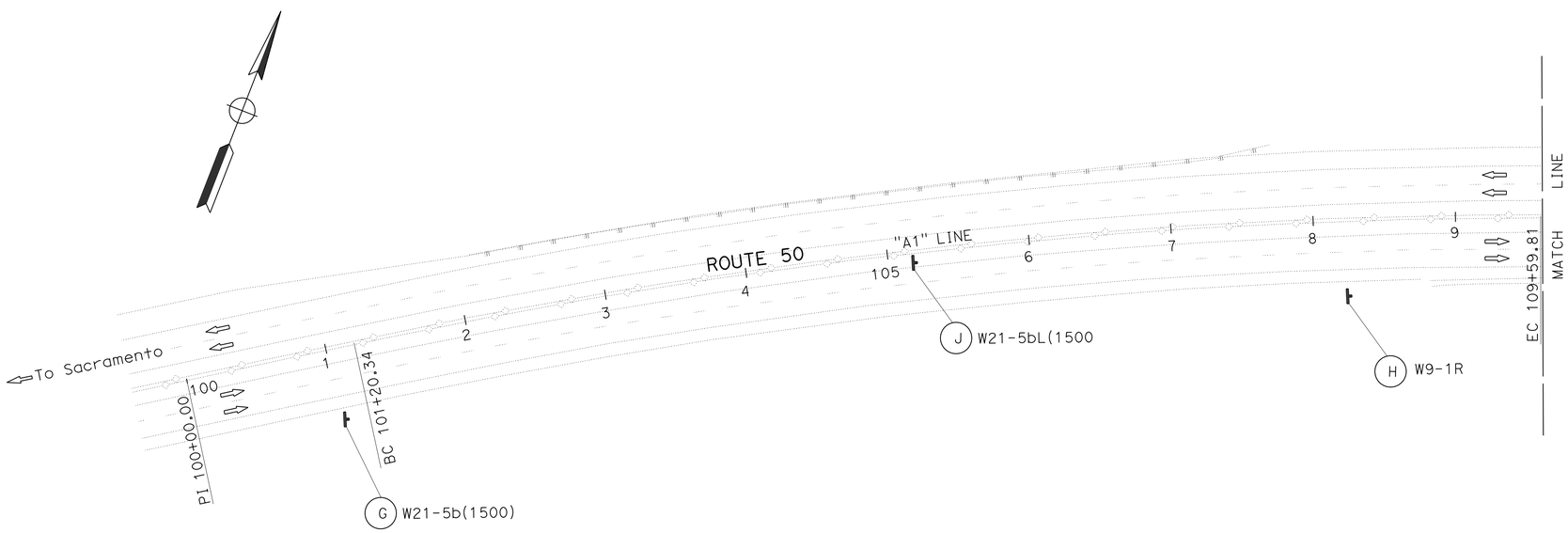

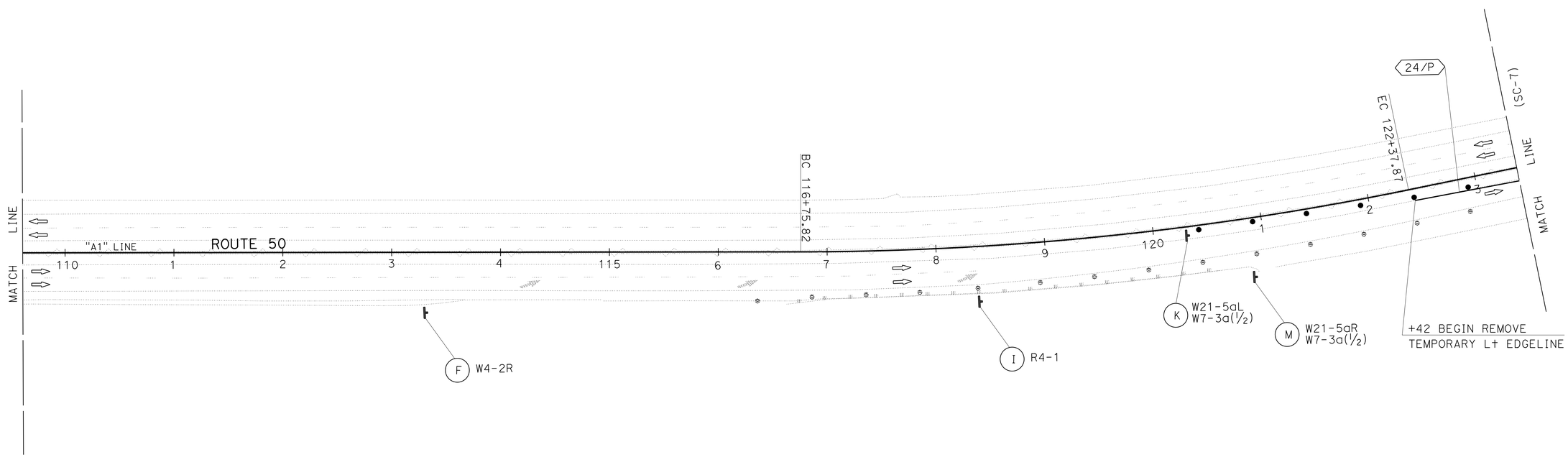

APPROVED FOR STAGE CONSTRUCTION AND TRAFFIC HANDLING WORK ONLY

STAGE 2
STAGE CONSTRUCTION AND TRAFFIC HANDLING PLAN

SC-6

STATE OF CALIFORNIA - DEPARTMENT OF TRANSPORTATION
Caltrans
NORTH REGION
DIVISION OF ENGINEERING

FUNCTIONAL SUPERVISOR: NESAR FORMOLI

CALCULATED-DESIGNED BY: CHUCK COOK
CHECKED BY: NARAYAN SELWAL

REVISED BY
DATE REVISED

LAST REVISION 00-00-00
DATE PLOTTED => 23-OCT-2013
TIME PLOTTED => 10:12

Dist	COUNTY	ROUTE	POST MILES TOTAL PROJECT	SHEET No.	TOTAL SHEETS
03	ED	50	R30.7/R31.7	29	119

REGISTERED CIVIL ENGINEER 8-19-13 DATE

8-19-13
PLANS APPROVAL DATE

REGISTERED PROFESSIONAL ENGINEER N. SELWAL No. 74816 Exp. 12-31-13 CIVIL STATE OF CALIFORNIA

THE STATE OF CALIFORNIA OR ITS OFFICERS OR AGENTS SHALL NOT BE RESPONSIBLE FOR THE ACCURACY OR COMPLETENESS OF SCANNED COPIES OF THIS PLAN SHEET.

NOTE:

DETAIL 36 AND 36A TO BE PLACED WITHOUT RETROREFLECTIVE PAVEMENT MARKERS.

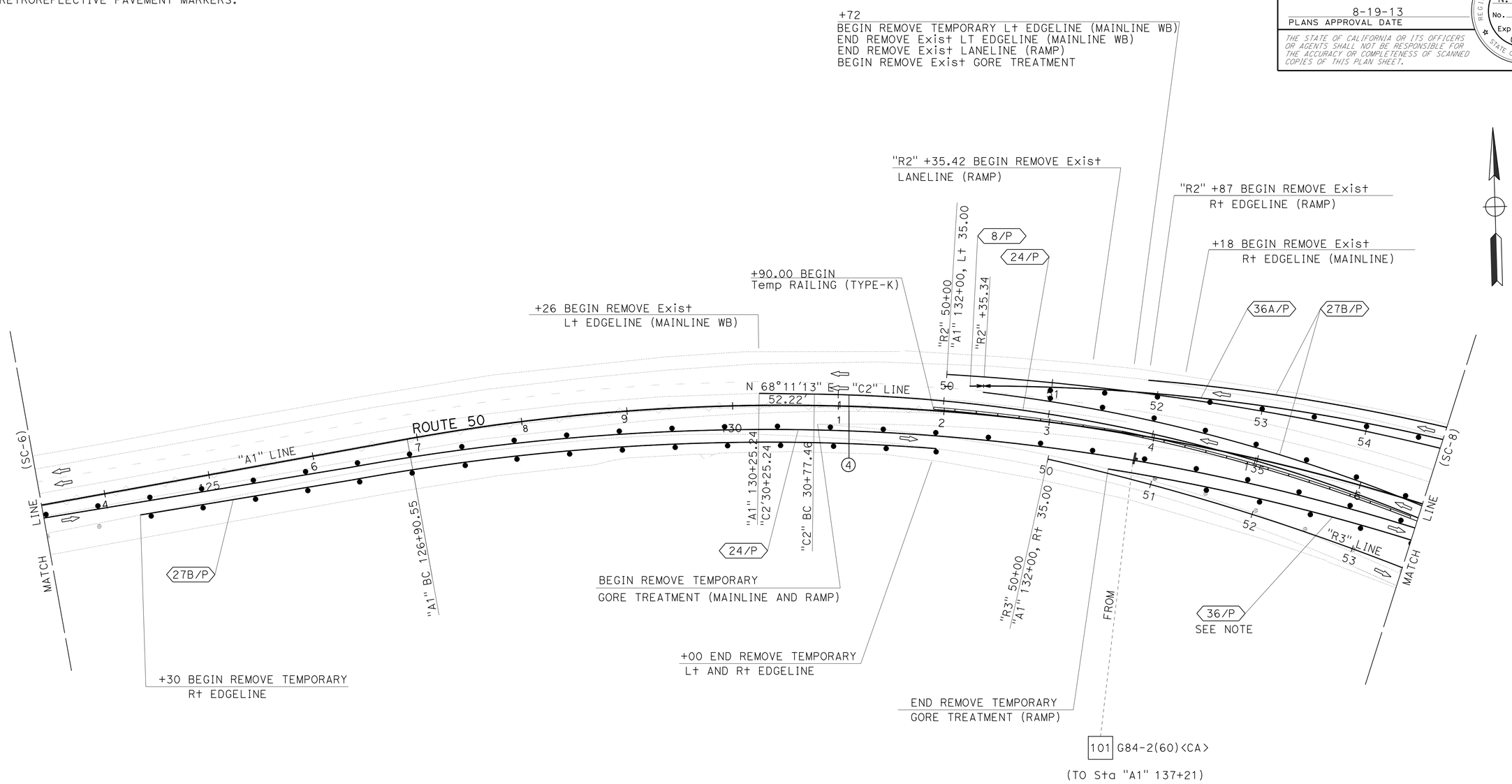

CURVE DATA

No.	R	Δ	T	L	ALIGNMENT
4	1550′	23°25′37″	321.37′	633.76′	C2

APPROVED FOR STAGE CONSTRUCTION AND TRAFFIC HANDLING WORK ONLY

STAGE 2
STAGE CONSTRUCTION AND TRAFFIC HANDLING PLAN
SC-7

STATE OF CALIFORNIA - DEPARTMENT OF TRANSPORTATION
Caltrans
NORTH REGION DIVISION OF ENGINEERING

FUNCTIONAL SUPERVISOR: NESAR FORMOLI
CALCULATED-DESIGNED BY: NARAYAN SELWAL
CHECKED BY: CHUCK COOK
REVISED BY
DATE REVISED

LAST REVISION 00-00-00
DATE PLOTTED => 23-OCT-2013
TIME PLOTTED => 10:12

Dist	COUNTY	ROUTE	POST MILES TOTAL PROJECT	SHEET No.	TOTAL SHEETS
03	ED	50	R30.7/R31.7	30	119

REGISTERED CIVIL ENGINEER 8-19-13 DATE

PLANS APPROVAL DATE 8-19-13

REGISTERED PROFESSIONAL ENGINEER N. SELWAL No. 74816 Exp. 12-31-13 CIVIL STATE OF CALIFORNIA

THE STATE OF CALIFORNIA OR ITS OFFICERS OR AGENTS SHALL NOT BE RESPONSIBLE FOR THE ACCURACY OR COMPLETENESS OF SCANNED COPIES OF THIS PLAN SHEET.

NOTE:

DETAIL 36 AND 36A TO BE PLACED WITHOUT RETROREFLECTIVE PAVEMENT MARKERS.

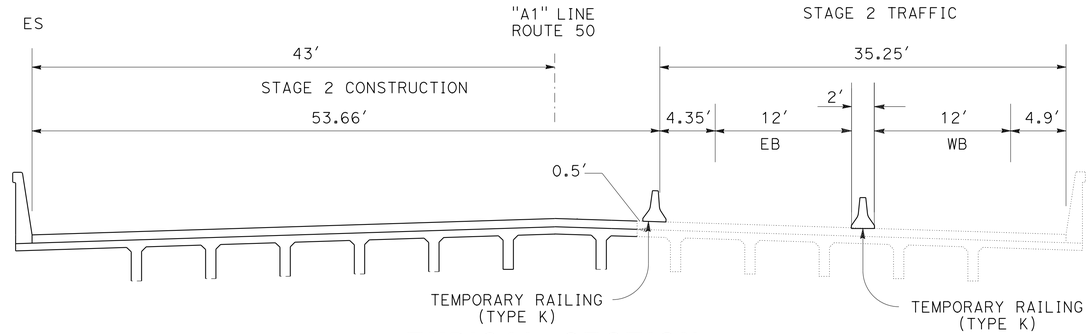

TYPICAL SECTION AT BRIDGE

CURVE DATA

No.	R	Δ	T	L	ALIGNMENT
4	1550'	23°25'37"	321.37'	633.76'	C2
5	7000'	04°12'52"	257.56'	514.88'	C2
6	6000'	05°01'41"	263.44'	526.54'	C2

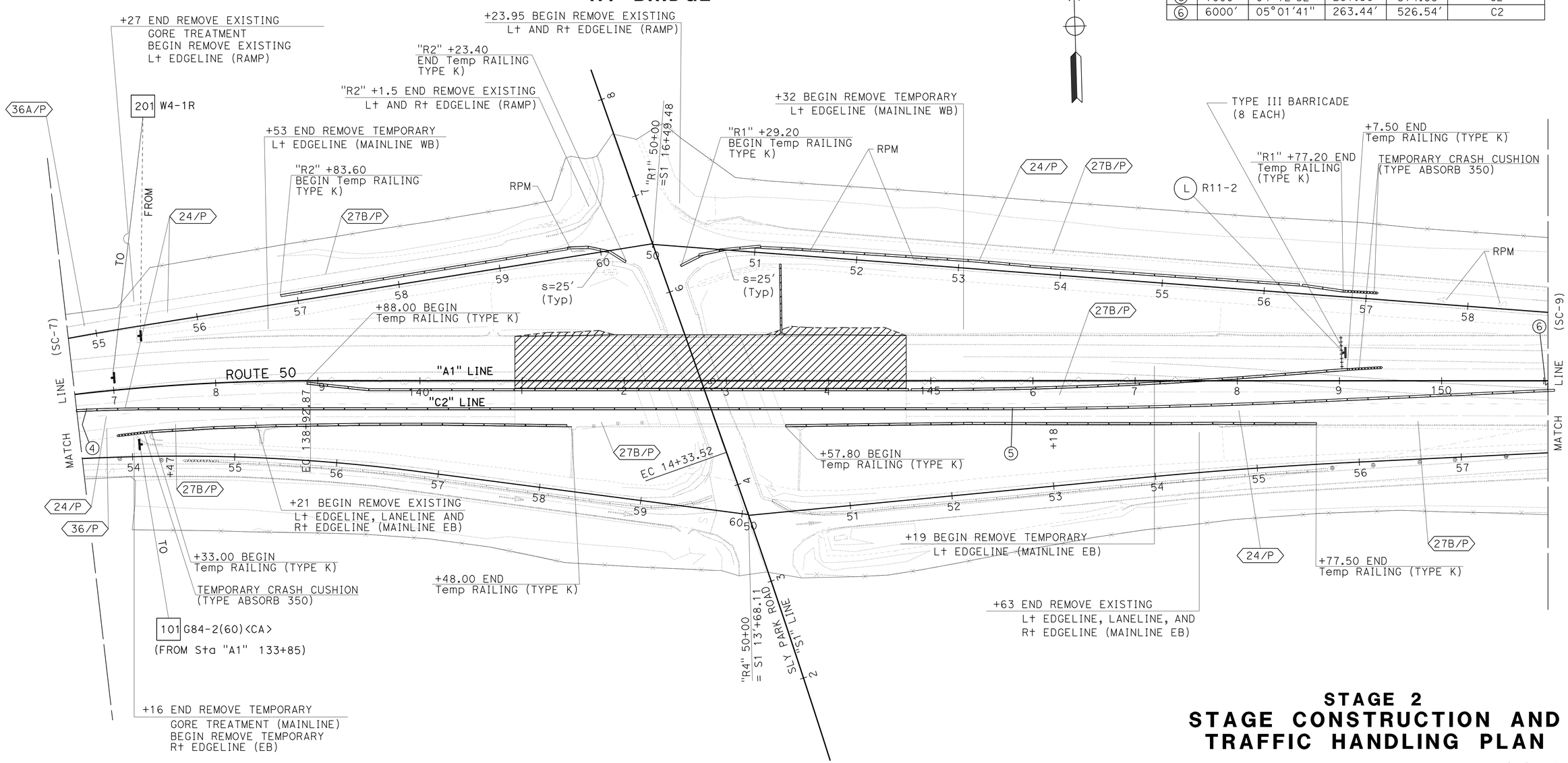

APPROVED FOR STAGE CONSTRUCTION AND TRAFFIC HANDLING WORK ONLY

STAGE 2
STAGE CONSTRUCTION AND TRAFFIC HANDLING PLAN

SC-8

STATE OF CALIFORNIA - DEPARTMENT OF TRANSPORTATION
NORTH REGION
DIVISION OF ENGINEERING

FUNCTIONAL SUPERVISOR: NESAR FORMOLI
CALCULATED-DESIGNED BY: CHUCK COOK
CHECKED BY: NARAYAN SELWAL
REVISED BY
DATE REVISED

LAST REVISION 00-00-00
DATE PLOTTED => 23-OCT-2013
TIME PLOTTED => 10:12

Dist	COUNTY	ROUTE	POST MILES TOTAL PROJECT	SHEET No.	TOTAL SHEETS
03	ED	50	R30.7/R31.7	31	119

REGISTERED CIVIL ENGINEER 8-19-13 DATE

8-19-13
PLANS APPROVAL DATE

REGISTERED PROFESSIONAL ENGINEER N. SELWAL No. 74816 Exp. 12-31-13 CIVIL STATE OF CALIFORNIA

THE STATE OF CALIFORNIA OR ITS OFFICERS OR AGENTS SHALL NOT BE RESPONSIBLE FOR THE ACCURACY OR COMPLETENESS OF SCANNED COPIES OF THIS PLAN SHEET.

NOTE

DETAIL 36 TO BE PLACED WITHOUT RETROREFLECTIVE PAVEMENT MARKERS.

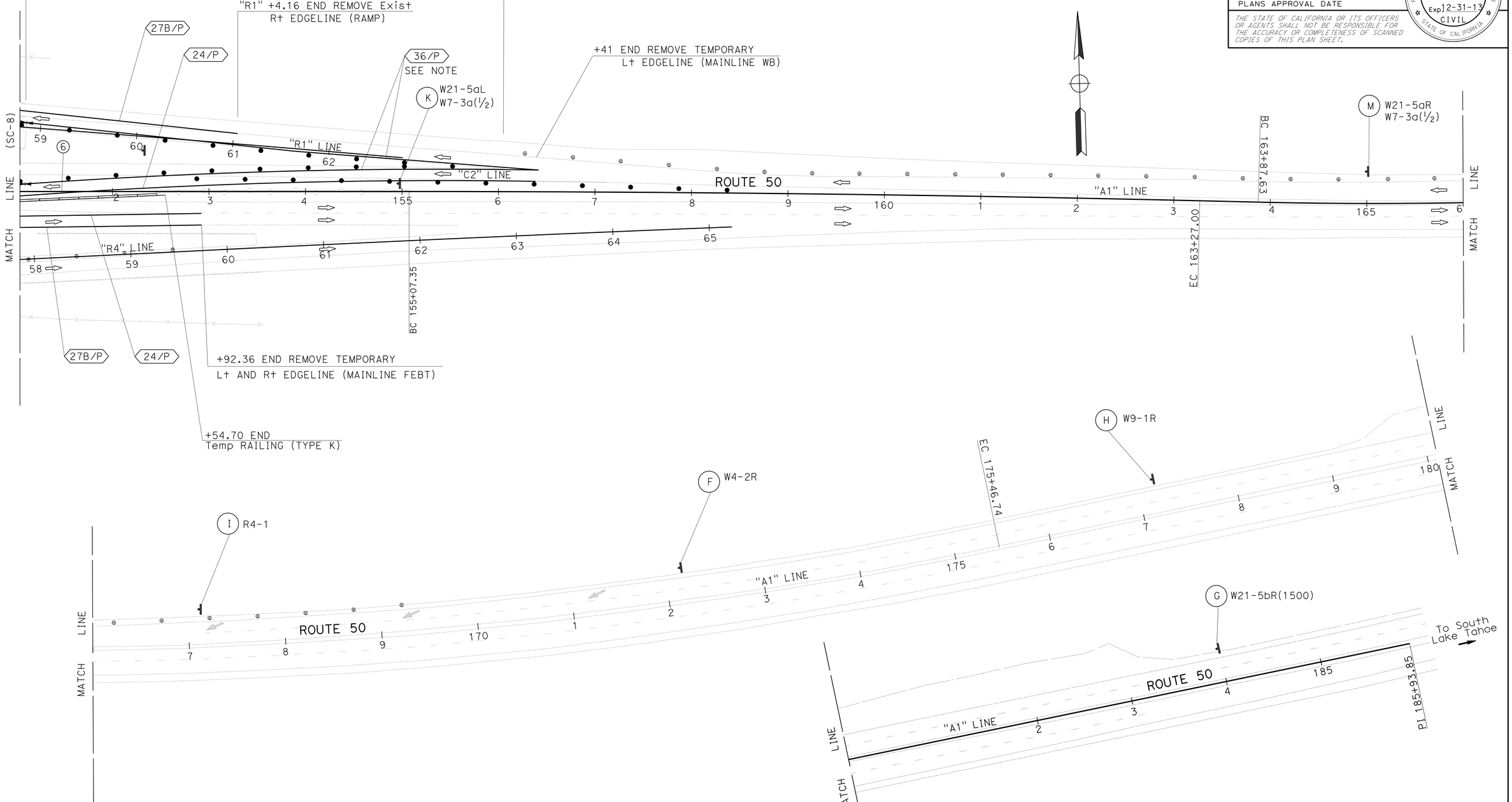

CURVE DATA

N.	R	△	T	L	ALIGNMENT
6	6000′	05°01′41″	263.44′	526.54′	C2

APPROVED FOR STAGE CONSTRUCTION AND TRAFFIC HANDLING WORK ONLY

STAGE 2
STAGE CONSTRUCTION AND TRAFFIC HANDLING PLAN

SC-9

STATE OF CALIFORNIA - DEPARTMENT OF TRANSPORTATION
Caltrans
NORTH REGION
DIVISION OF ENGINEERING

FUNCTIONAL SUPERVISOR: NESAR FORMOLI
CALCULATED-DESIGNED BY: CHUCK COOK
CHECKED BY: NARAYAN SELWAL
REVISED BY / DATE REVISED

LAST REVISION 00-00-00 | DATE PLOTTED => 23-OCT-2013 | TIME PLOTTED => 10:12

Dist	COUNTY	ROUTE	POST MILES TOTAL PROJECT	SHEET No.	TOTAL SHEETS
03	ED	50	R30.7/R31.7	32	119

REGISTERED CIVIL ENGINEER 8-19-13 DATE

8-19-13
PLANS APPROVAL DATE

REGISTERED PROFESSIONAL ENGINEER
N. SELWAL
No. 74816
Exp. 12-31-13
CIVIL
STATE OF CALIFORNIA

THE STATE OF CALIFORNIA OR ITS OFFICERS OR AGENTS SHALL NOT BE RESPONSIBLE FOR THE ACCURACY OR COMPLETENESS OF SCANNED COPIES OF THIS PLAN SHEET.

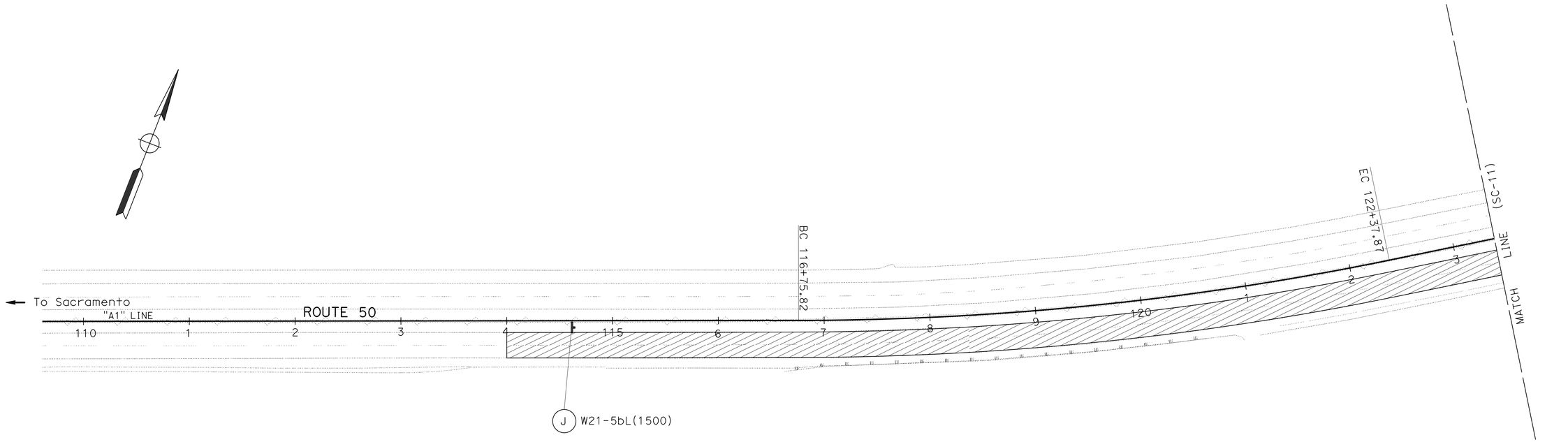

APPROVED FOR STAGE CONSTRUCTION AND TRAFFIC HANDLING WORK ONLY

STAGE 3
STAGE CONSTRUCTION AND TRAFFIC HANDLING PLAN

SC-10

STATE OF CALIFORNIA - DEPARTMENT OF TRANSPORTATION
Caltrans
NORTH REGION
DIVISION OF ENGINEERING

FUNCTIONAL SUPERVISOR: NESAR FORMOLI

CALCULATED-DESIGNED BY: CHUCK COOK
CHECKED BY: NARAYAN SELWAL

REVISED BY
DATE REVISED

LAST REVISION 00-00-00
DATE PLOTTED => 23-OCT-2013
TIME PLOTTED => 10:12

Dist	COUNTY	ROUTE	POST MILES TOTAL PROJECT	SHEET No.	TOTAL SHEETS
03	ED	50	R30.7/R31.7	33	119

REGISTERED CIVIL ENGINEER 8-19-13 DATE

PLANS APPROVAL DATE 8-19-13

REGISTERED PROFESSIONAL ENGINEER N. SELWAL No. 74816 Exp. 12-31-13 CIVIL STATE OF CALIFORNIA

THE STATE OF CALIFORNIA OR ITS OFFICERS OR AGENTS SHALL NOT BE RESPONSIBLE FOR THE ACCURACY OR COMPLETENESS OF SCANNED COPIES OF THIS PLAN SHEET.

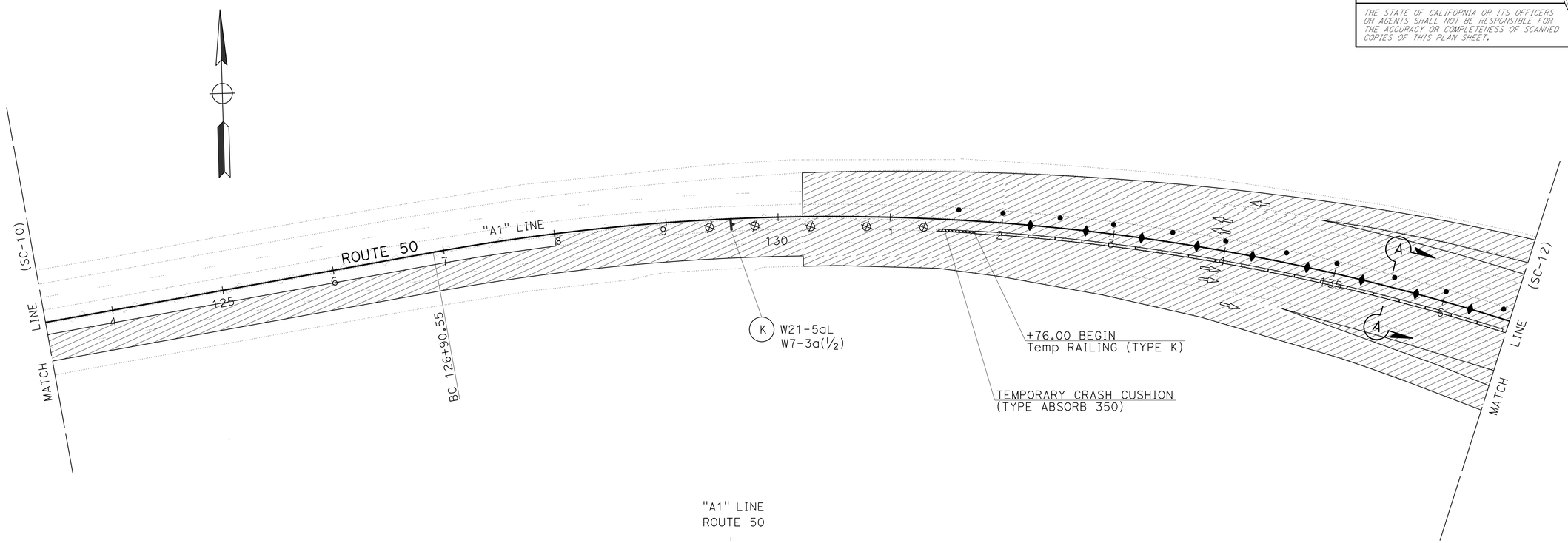

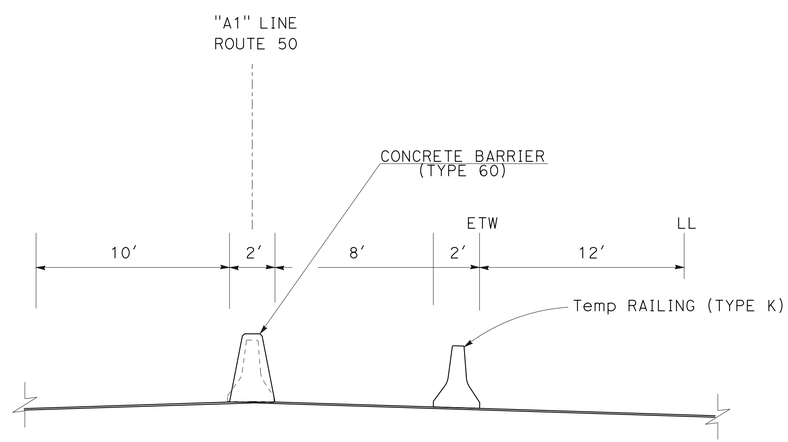

SECTION A-A

APPROVED FOR STAGE CONSTRUCTION AND TRAFFIC HANDLING WORK ONLY

STAGE 3
STAGE CONSTRUCTION AND TRAFFIC HANDLING PLAN

SC-11

STATE OF CALIFORNIA - DEPARTMENT OF TRANSPORTATION
Caltrans
NORTH REGION
DIVISION OF ENGINEERING

FUNCTIONAL SUPERVISOR: NESAR FORMOLI

CALCULATED-DESIGNED BY: CHUCK COOK
CHECKED BY: NARAYAN SELWAL

REVISED BY
DATE REVISED

LAST REVISION 00-00-00
DATE PLOTTED => 23-OCT-2013
TIME PLOTTED => 10:12

Dist	COUNTY	ROUTE	POST MILES TOTAL PROJECT	SHEET No.	TOTAL SHEETS
03	ED	50	R30.7/R31.7	34	119

REGISTERED CIVIL ENGINEER 8-19-13 DATE

PLANS APPROVAL DATE 8-19-13

REGISTERED PROFESSIONAL ENGINEER N. SELWAL No. 74816 Exp. 12-31-13 CIVIL STATE OF CALIFORNIA

THE STATE OF CALIFORNIA OR ITS OFFICERS OR AGENTS SHALL NOT BE RESPONSIBLE FOR THE ACCURACY OR COMPLETENESS OF SCANNED COPIES OF THIS PLAN SHEET.

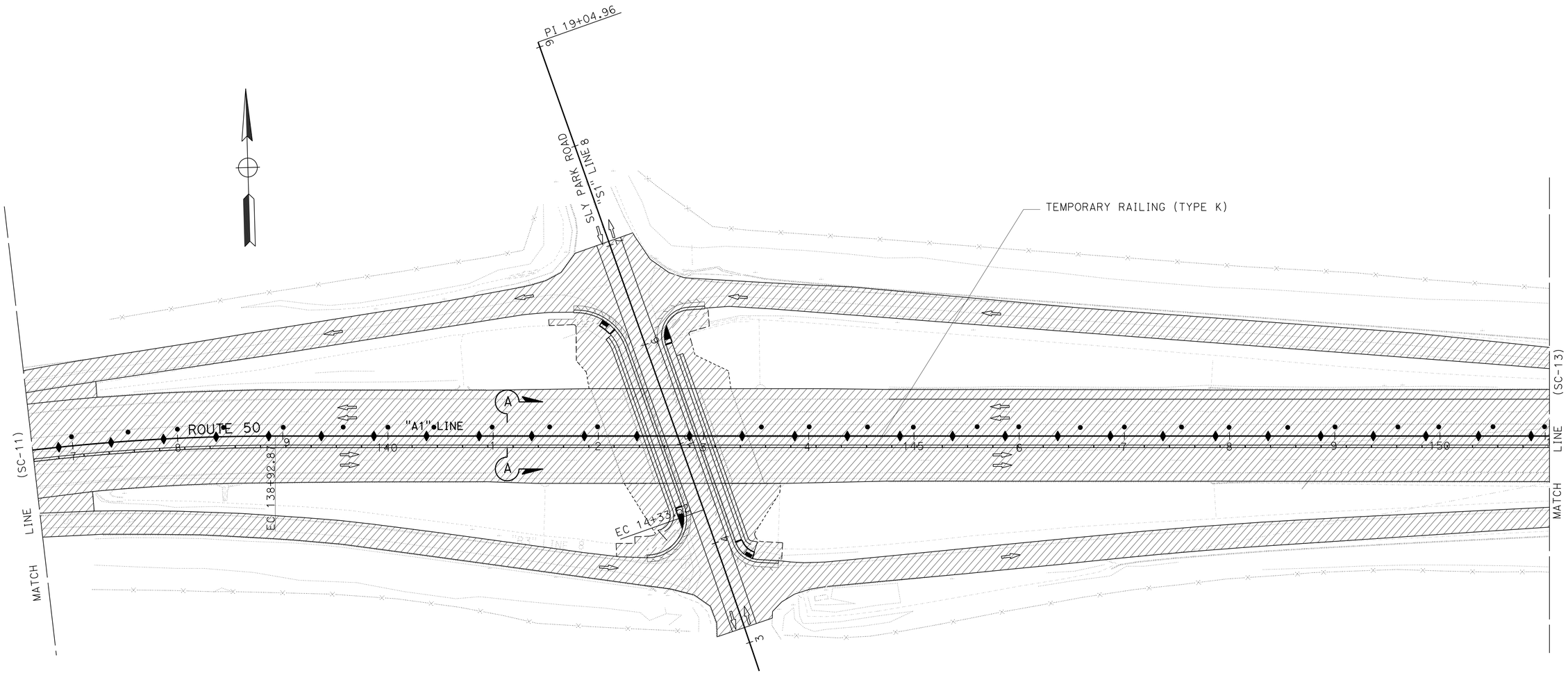

NOTE: SEE SHEET SC-11 FOR SECTION A-A

APPROVED FOR STAGE CONSTRUCTION AND TRAFFIC HANDLING WORK ONLY

STAGE 3
STAGE CONSTRUCTION AND TRAFFIC HANDLING PLAN
SC-12

STATE OF CALIFORNIA - DEPARTMENT OF TRANSPORTATION
Caltrans
NORTH REGION
DIVISION OF ENGINEERING

FUNCTIONAL SUPERVISOR: NESAR FORMOLI

CALCULATED-DESIGNED BY: CHUCK COOK
CHECKED BY: NARAYAN SELWAL

REVISED BY
DATE REVISED

LAST REVISION 00-00-00
DATE PLOTTED => 23-OCT-2013
TIME PLOTTED => 10:12

Dist	COUNTY	ROUTE	POST MILES TOTAL PROJECT	SHEET No.	TOTAL SHEETS
03	ED	50	R30.7/R31.7	35	119

REGISTERED CIVIL ENGINEER 8-19-13 DATE

8-19-13
PLANS APPROVAL DATE

REGISTERED PROFESSIONAL ENGINEER
N. SELWAL
No. 74816
Exp. 12-31-13
CIVIL
STATE OF CALIFORNIA

THE STATE OF CALIFORNIA OR ITS OFFICERS OR AGENTS SHALL NOT BE RESPONSIBLE FOR THE ACCURACY OR COMPLETENESS OF SCANNED COPIES OF THIS PLAN SHEET.

NOTE: SEE SHEET SC-11 FOR SECTION A-A

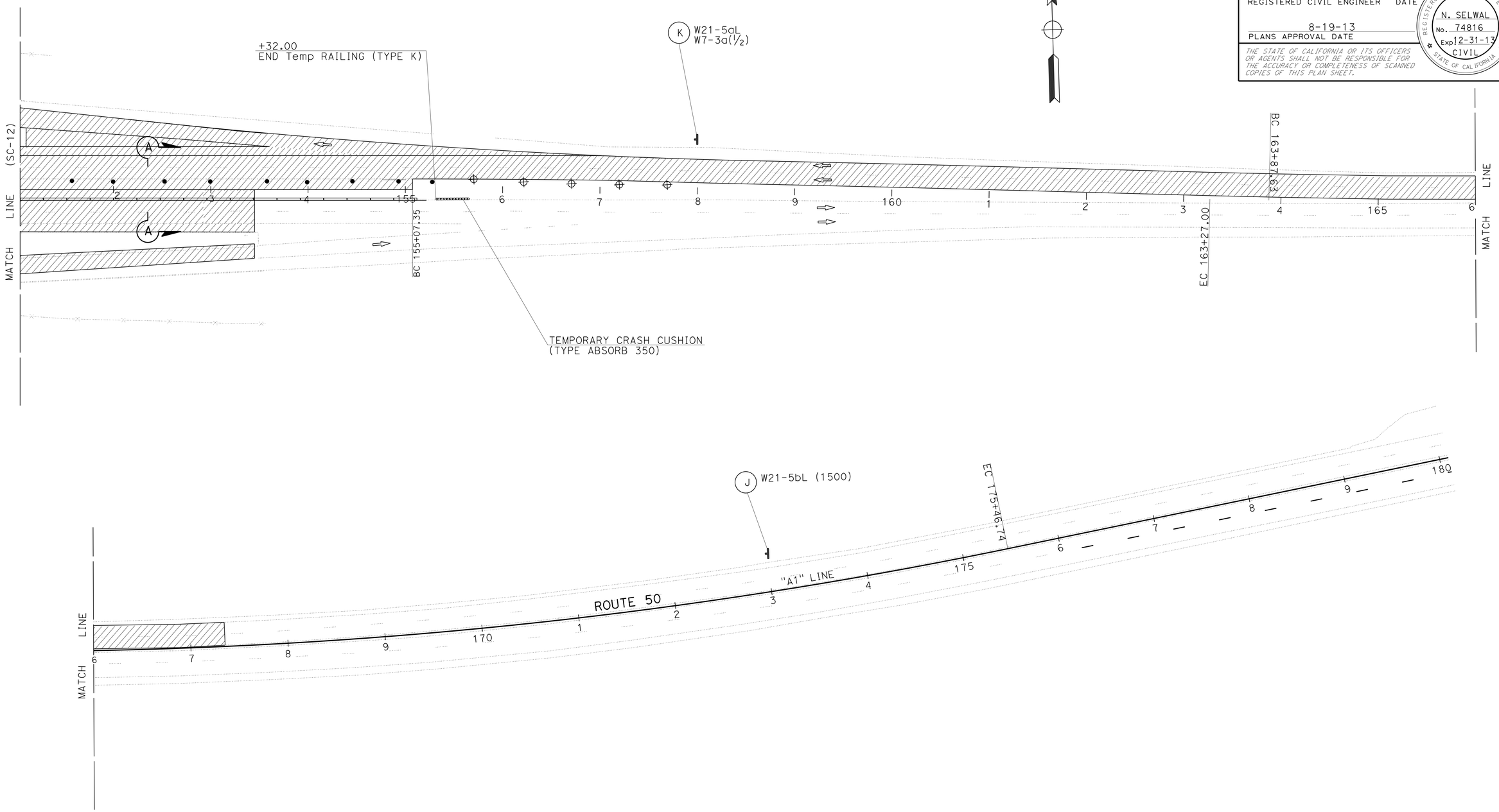

APPROVED FOR STAGE CONSTRUCTION AND TRAFFIC HANDLING WORK ONLY

STAGE 3
STAGE CONSTRUCTION AND TRAFFIC HANDLING PLAN

SC-13

STATE OF CALIFORNIA - DEPARTMENT OF TRANSPORTATION
Caltrans
NORTH REGION
DIVISION OF ENGINEERING

FUNCTIONAL SUPERVISOR: NESAR FORMOLI

CALCULATED-DESIGNED BY: CHUCK COOK
CHECKED BY: NARAYAN SELWAL

REVISED BY | DATE REVISED

LAST REVISION 00-00-00 | DATE PLOTTED => 23-OCT-2013 | TIME PLOTTED => 10:12

Dist	COUNTY	ROUTE	POST MILES TOTAL PROJECT	SHEET No.	TOTAL SHEETS
03	ED	50	R30.7/R31.7	36	119

REGISTERED CIVIL ENGINEER 8-19-13 DATE

8-19-13
PLANS APPROVAL DATE

REGISTERED PROFESSIONAL ENGINEER N. SELWAL No. 74816 Exp 12-31-13 CIVIL STATE OF CALIFORNIA

THE STATE OF CALIFORNIA OR ITS OFFICERS OR AGENTS SHALL NOT BE RESPONSIBLE FOR THE ACCURACY OR COMPLETENESS OF SCANNED COPIES OF THIS PLAN SHEET.

NOTE:

1. SEE SHEETS DE-1 TO DE-3 FOR LOCATION AND QUANTITIES OF ADDITIONAL CONSTRUCTION AREA SIGNS FOR SLY PARK Rd DETOUR.
2. SLY PARK ROAD TO BE CLOSED ON NIGHTS WHILE DISMANTLING THE EXISTING BRIDGE AND ERECTING NEW GIRDERS.

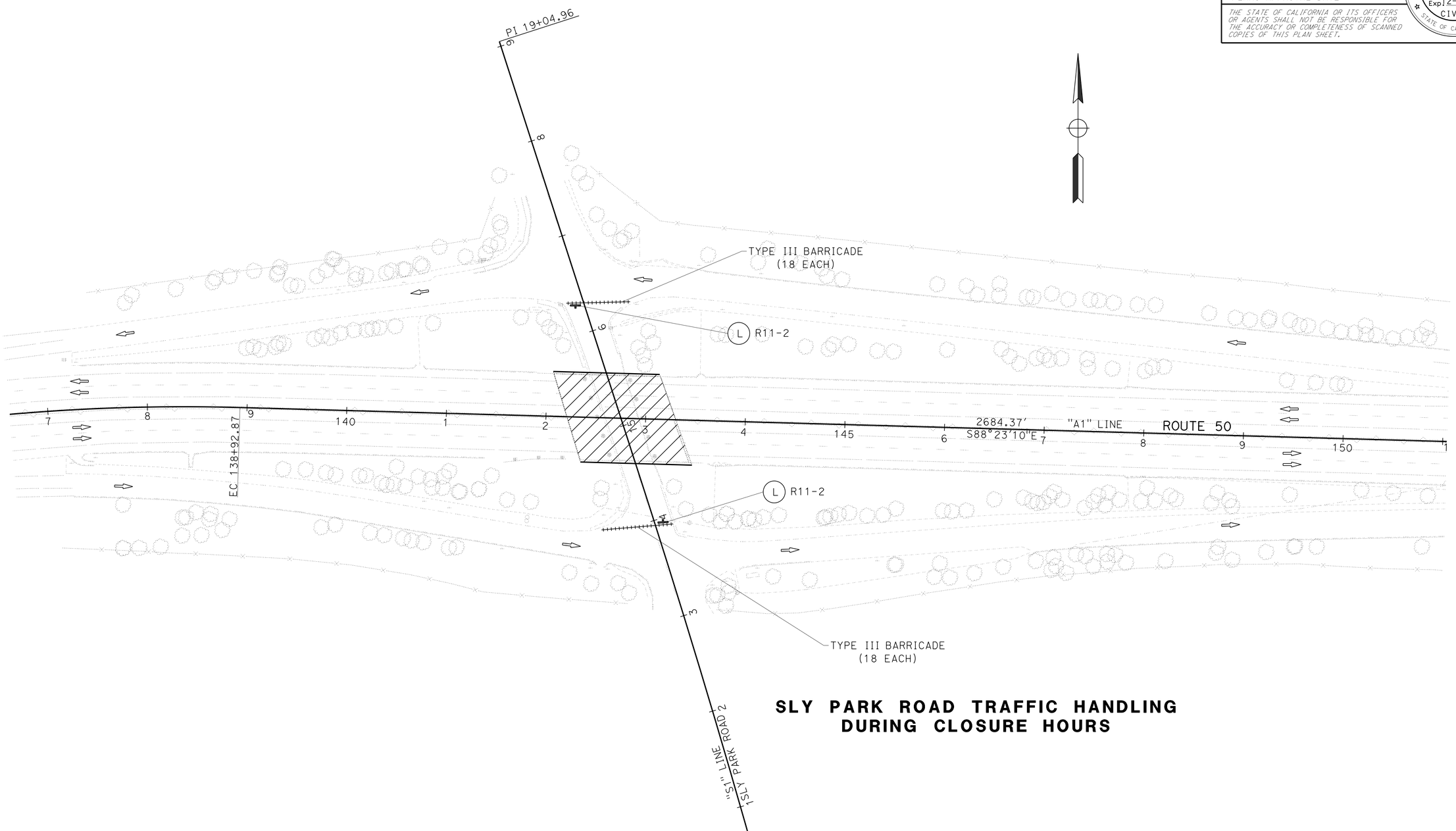

SLY PARK ROAD TRAFFIC HANDLING DURING CLOSURE HOURS

STAGE CONSTRUCTION DETAILS

NO SCALE

SCD-1

STATE OF CALIFORNIA - DEPARTMENT OF TRANSPORTATION
Caltrans
NORTH REGION
DIVISION OF ENGINEERING

FUNCTIONAL SUPERVISOR: NESAR FORMOLI
CALCULATED-DESIGNED BY: WESLEY LEE
CHECKED BY: NARAYAN SELWAL
REVISED BY
DATE REVISED

LAST REVISION 00-00-00
DATE PLOTTED => 23-OCT-2013
TIME PLOTTED => 10:12

Dist	COUNTY	ROUTE	POST MILES TOTAL PROJECT	SHEET No.	TOTAL SHEETS
03	ED	50	R30.7/R31.7	37	119

REGISTERED CIVIL ENGINEER 8-19-13 DATE

PLANS APPROVAL DATE 8-19-13

REGISTERED PROFESSIONAL ENGINEER N. SELWAL No. 74816 Exp. 12-31-13 CIVIL STATE OF CALIFORNIA

THE STATE OF CALIFORNIA OR ITS OFFICERS OR AGENTS SHALL NOT BE RESPONSIBLE FOR THE ACCURACY OR COMPLETENESS OF SCANNED COPIES OF THIS PLAN SHEET.

NOTE (THIS SHEET ONLY):

TAPER HMA (TYPE 2) FOR 2' ON ALL SIDES TO CONFORM TO EXSITING DI GRATE.

LEGEND:

COLD PLANE AC Pvmt, 0.10' PLACE HMA (TYPE A) OVERLAY, 0.10' TO 0.25'

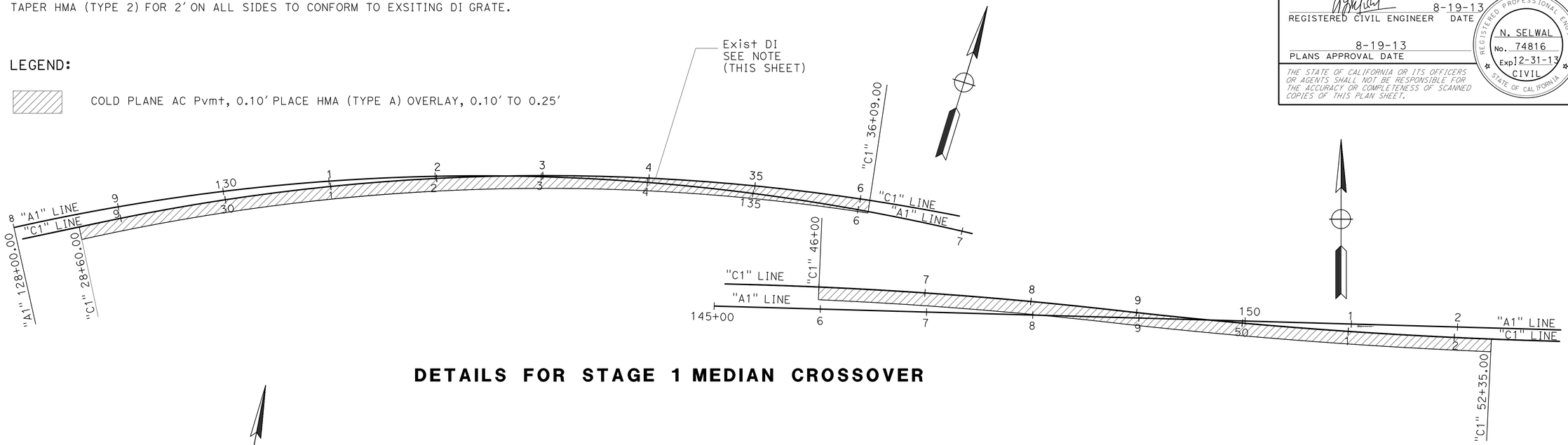

DETAILS FOR STAGE 1 MEDIAN CROSSOVER

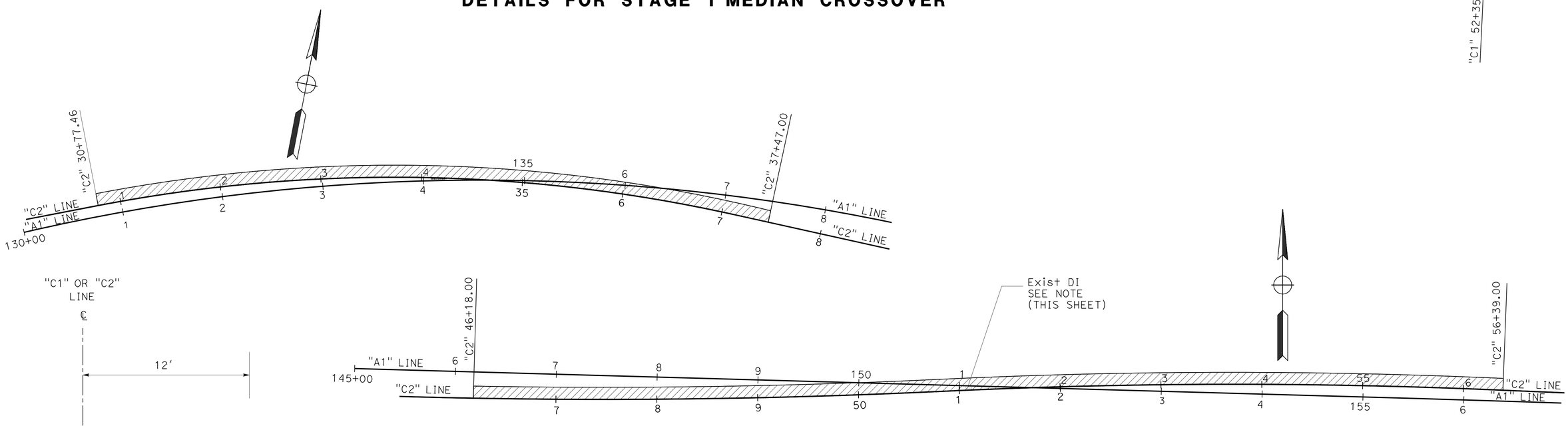

DETAILS FOR STAGE 2 MEDIAN CROSSOVER

STAGE CONSTRUCTION DETAILS

NO SCALE

SCD-2

STATE OF CALIFORNIA - DEPARTMENT OF TRANSPORTATION

Caltrans

NORTH REGION
DIVISION OF ENGINEERING

FUNCTIONAL SUPERVISOR: NESAR FORMOLI

CALCULATED-DESIGNED BY: WESLEY LEE

CHECKED BY: NARAYAN SELWAL

REVISED BY | DATE REVISED

LAST REVISION 00-00-00 | DATE PLOTTED => 23-OCT-2013 | TIME PLOTTED => 10:12

Dist	COUNTY	ROUTE	POST MILES TOTAL PROJECT	SHEET No.	TOTAL SHEETS
03	ED	50	R30.7/R31.7	38	119

REGISTERED CIVIL ENGINEER 8-19-13 DATE

8-19-13
PLANS APPROVAL DATE

REGISTERED PROFESSIONAL ENGINEER N. SELWAL No. 74816 Exp. 12-31-13 CIVIL STATE OF CALIFORNIA

THE STATE OF CALIFORNIA OR ITS OFFICERS OR AGENTS SHALL NOT BE RESPONSIBLE FOR THE ACCURACY OR COMPLETENESS OF SCANNED COPIES OF THIS PLAN SHEET.

REMOVE PAINTED PAVEMENT MARKING (WATER BLASTING)

STAGE	DESCRIPTION	SQFT
1	STOP	22
	AHEAD	31
	TYPE V	99
2	TYPE V	99
	AHEAD	31
	STOP	22
	TOTAL	304

REMOVE PAINTED TRAFFIC STRIPE (WATER BLASTING)

DETAIL	STAGE 1	STAGE 2
	LF	LF
LANELINE	5,859	236
R+ EDGELINE	7,092	6,869
GORE	980	4,526
SUBTOTAL	19,285	17,571
TOTAL	25,562	

TEMPORARY TRAFFIC STRIPE (PAINT)

STAGE	DETAIL	LF
1	36	1,146
	27B	7,889
	24	3,681
2	36/36A	1,943
	27B	5,239
	8	60
	24	4,565
	TOTAL	24,523

NOTE: DETAILS 36 AND 36A TO BE PLACED WITHOUT RETROREFLECTIVE PAVEMENT MARKERS.

TEMPORARY RAILING (TYPE K)

LOCATION	STAGE	LF
"A1" 131+90.00 TO 152+54.70	1	2064.70
"A1" 131+90.00 TO 152+54.70	2	2064.70
"A1" 138+88.00 TO 149+07.50	2	1019.50
"A1" 137+33.00 TO 141+48.00	2	415.00
"A1" 143+57.80 TO 148+77.50	2	519.70
"A1" 131+76.00 TO 155+32.00	3	2356.00
"R3" 54+83.40 TO 59+69.00	1	485.60
"R4" 50+24.00 TO 55+68.00	1	544.00
"R2" 56+83.60 TO 60+23.40	2	339.80
"R1" 50+29.20 TO 56+77.20	2	648.00
	TOTAL	10457.00

TEMPORARY PAVEMENT MARKING (PAINT)

STAGE	DESCRIPTION	SQFT
1	STOP	22
	AHEAD	31
	TYPE V	99
	TYPE VI	252
2	TYPE V	99
	AHEAD	31
	STOP	22
	TOTAL	556

STAGING ROADWAY QUANTITIES

LOCATION	STAGE	COLD PLANE AC Pvm+	HMA-A	TACK COAT	DESCRIPTION
		SQYD	TON	TON	
"C1" 28+60.00 TO 36+09.00	1	999	66.58	0.46	MEDIAN CROSS OVER
"C1" 46+00.00 TO 52+35.00	1	847	56.44	0.39	MEDIAN CROSS OVER
"C2" 30+77.46 TO 37+47.00	2	893	59.51	0.41	MEDIAN CROSS OVER
"C2" 46+18.00 TO 56+39.00	2	1,362	90.76	0.62	MEDIAN CROSS OVER
	SUBTOTAL	4,101	273.29	1.88	
	TOTAL	**	**	**	

** FOR TOTAL QUANTITY, SEE ROADWAY ITEMS TABLE ON SUMMARY OF QUANTITIES SHEET Q-1.

TEMPORARY CRASH CUSHION MODULE (TYPE ABSORB 350)

LOCATION	STAGE	EA
"A1" 148+00.00	1	1
"R3" 54+83.00	1	1
"A1" 137+33.00	2	1
"A1" 149+07.50	2	1
"R1" 56+08.00	2	1
"A1" 155+32.00	3	1
"A1" 131+76.00	3	1
	TOTAL	7

CHANNELIZER - PLASTIC DRUM - BARRICADE

LOCATION	STAGE	CHANNELIZER (SURFACE MOUNTED)	TRAFFIC PLASTIC DRUM	TYPE III BARRICADE
		EA	EA	EA
"A1" 116+36.00 TO 169+17.00	1	116		11
"R3" 50+00.00 TO 54+50.00	1	18		-
"R4" 55+60.00 TO 60+00.00	1	10	-	-
"A1" 120+00.00 TO 157+00.00	2	90		8
"R2" 50+00.00 TO 57+00.00	2	12		-
"R1" 57+00.00 TO 62+25.84	2	12	-	-
"A1" 129+00.00 TO 158+00.00	3	45	10	-
"S1" 14+00.00 TO 16+00.00	1&2	-	-	36
	TOTAL	303	10	55

REMOVE YELLOW PAINTED TRAFFIC STRIPE (HAZARDOUS WASTE) WATER BLASTING

DETAIL	STAGE 1	STAGE 2
	LF	LF
L+ EDGELINE	5,354	5,940
TOTAL	11,294	

TRAFFIC HANDLING QUANTITIES

THQ-1

REVISED BY | DATE REVISED
CHUCK COOK | NARAYAN SELWAL
CALCULATED-DESIGNED BY | CHECKED BY
FUNCTIONAL SUPERVISOR | NESAR FORMOLI
STATE OF CALIFORNIA - DEPARTMENT OF TRANSPORTATION
NORTH REGION DIVISION OF ENGINEERING
Caltrans

LAST REVISION 00-00-00 | DATE PLOTTED => 23-OCT-2013 | TIME PLOTTED => 10:12

Dist	COUNTY	ROUTE	POST MILES TOTAL PROJECT	SHEET No.	TOTAL SHEETS
03	ED	50	R30.7/R31.7	39	119

REGISTERED CIVIL ENGINEER 8-19-13 DATE

8-19-13
PLANS APPROVAL DATE

REGISTERED PROFESSIONAL ENGINEER N. SELWAL No. 74816 Exp. 12-31-13 CIVIL STATE OF CALIFORNIA

THE STATE OF CALIFORNIA OR ITS OFFICERS OR AGENTS SHALL NOT BE RESPONSIBLE FOR THE ACCURACY OR COMPLETENESS OF SCANNED COPIES OF THIS PLAN SHEET.

ADDITIONAL STATIONARY MOUNTED CONSTRUCTION AREA SIGNS

SIGN LETTER	SIGN CODE FEDERAL	SIGN CODE CALIFORNIA	PANEL SIZE	SIGN MESSAGE	NUMBER OF POST AND SIZE	NUMBER OF SIGNS
F	W4-2R		48" X 48"	RIGHT LANE ENDS (SYMBOL)	1- 6" X 6"	2
G	W21-5bR(1500)		48" X 48"	RIGHT SHOULDER CLOSED 1500 FT	1- 6" X 6"	2
H	W9-1R		48" X 48"	RIGHT LANE ENDS	1- 6" X 6"	2
I	R4-1		36" X 48"	DO NOT PASS	1- 4" X 6"	2
J	W21-5bL(1500)		48" X 48"	LEFT SHOULDER CLOSED 1500 FT	1- 6" X 6"	2
K	W21-5aL W7-3a(1/2)		48" X 48" 24" X 18"	LEFT SHOULDER CLOSED NEXT 1/2 MILE	1- 6" X 6"	2
L	R11-2		48" X 30"	ROAD CLOSED	ON BARRICADE	4
M	W21-5aR W7-3a(1/2)		48" X 48" 24" X 18"	RIGHT SHOULDER CLOSED NEXT 1/2 MILE	1- 6" X 6"	2

NOTES:

1. EXACT SIGN LOCATION TO BE DETERMINED BY THE ENGINEER.
2. FOR ADDITIONAL STATIONARY MOUNTED CONSTRUCTION AREA SIGNS, SEE SHEETS CS-1 AND DE-1

TRAFFIC HANDLING ROADSIDE SIGN QUANTITIES

STAGE	RELOCATE ROADSIDE SIGN (EACH)
1	2
2	1
3	0
SHEET TOTAL	3

NOTE:
FOR ADDITIONAL RELOCATE ROADSIDE SIGN QUANTITIES, SEE SHEET SQ-1 AND SQ-2.

ROADSIDE SIGN - ADDITIONAL STATIONARY MOUNTED CONSTRUCTION AREA SIGN

SIGN NUMBER No.	SIGN CODE FEDERAL	SIGN CODE CALIFORNIA	STAGE 1 ROADSIDE SIGN: RELOCATE ROADSIDE SIGN (EACH)	STAGE 1 CONSTRUCTION AREA SIGN: SIGN TO REMAIN	STAGE 1 CONSTRUCTION AREA SIGN: REMOVE SIGN	STAGE 1 CONSTRUCTION AREA SIGN: RELOCATE SIGN	STAGE 2 ROADSIDE SIGN: RELOCATE ROADSIDE SIGN (EACH)	STAGE 2 CONSTRUCTION AREA SIGN: SIGN TO REMAIN	STAGE 2 CONSTRUCTION AREA SIGN: REMOVE SIGN	STAGE 2 CONSTRUCTION AREA SIGN: RELOCATE SIGN	STAGE 3 ROADSIDE SIGN: RELOCATE ROADSIDE SIGN (EACH)	STAGE 3 CONSTRUCTION AREA SIGN: SIGN TO REMAIN	STAGE 3 CONSTRUCTION AREA SIGN: REMOVE SIGN	STAGE 3 CONSTRUCTION AREA SIGN: RELOCATE SIGN	"FINAL" CONSTRUCTION AREA SIGN: REMOVE SIGN
101		G84-2(60)	1							X		X			X
102		G84-2(60)	1					X						X	X
201	W4-1R						1							X	X
TOTAL			2				1				0				

TRAFFIC HANDLING QUANTITIES

THQ-2

STATE OF CALIFORNIA - DEPARTMENT OF TRANSPORTATION
Caltrans
NORTH REGION DIVISION OF ENGINEERING

FUNCTIONAL SUPERVISOR: NESAR FORMOLI
CALCULATED-DESIGNED BY: CHUCK COOK
CHECKED BY: NARAYAN SELWAL
REVISED BY
DATE REVISED

LAST REVISION 00-00-00
DATE PLOTTED => 23-OCT-2013
TIME PLOTTED => 10:12

Dist	COUNTY	ROUTE	POST MILES TOTAL PROJECT	SHEET No.	TOTAL SHEETS
03	ED	50	R30.7/R31.7	40	119

REGISTERED CIVIL ENGINEER 8-19-13 DATE

8-19-13
PLANS APPROVAL DATE

REGISTERED PROFESSIONAL ENGINEER N. SELWAL No. 74816 Exp. 12-31-13 CIVIL STATE OF CALIFORNIA

THE STATE OF CALIFORNIA OR ITS OFFICERS OR AGENTS SHALL NOT BE RESPONSIBLE FOR THE ACCURACY OR COMPLETENESS OF SCANNED COPIES OF THIS PLAN SHEET.

ADDITIONAL STATIONARY MOUNTED CONSTRUCTION AREA SIGNS

SIGN LETTER	SIGN CODE	PANEL SIZE	SIGN MESSAGE	NUMBER OF POST AND SIZE	NUMBER OF SIGNS	REMARKS
S	SPEC1 M4-10R	54" X 30" 48" X 18"	SLY PARK ROAD DETOUR	1'-6" X 6"	6	
T	SPEC1 M4-10L	54" X 30" 48" X 18"	SLY PARK ROAD DETOUR	1'-6" X 6"	4	
U	M4-8A	24" X 18"	END DETOUR	1'-4" X 4"	2	
V	W20-2	36" X 36"	DETOUR AHEAD	1'-4" X 6"	2	
W	W20-3	36" X 36"	ROAD CLOSED AHEAD	1'-4" X 6"	2	
X	R5-6 R9-3a	24" X 24" 24" X 24"	NO BIKE SYMBOL NO PEDESTRAIN SYMBOL	1'-4" X 6"	2	SEE NOTE 4

SPEC1

SLY PARK
ROAD

6" E SERIES LETTERS

54"x30"

RETROREFLECTIVE ORANGE BACKGROUND WITH BLACK LEGEND AND BORDER.

NOTES:

1. EXACT SIGN LOCATIONS TO BE DETERMINED BY THE ENGINEER.
2. FOR ADDITIONAL STATIONARY MOUNTED CONSTRUCTION AREA SIGNS, SEE SHEET CS-1 AND THQ-2.
3. THIS PLAN ACCURATE FOR SLY PARK ROAD DETOUR TRAFFIC HANDLING ONLY.
4. CONTRACTOR IS TO PROVIDE SERVICE PATROL TRUCK FOR PEDESTRAINS & BICYCLISTS.

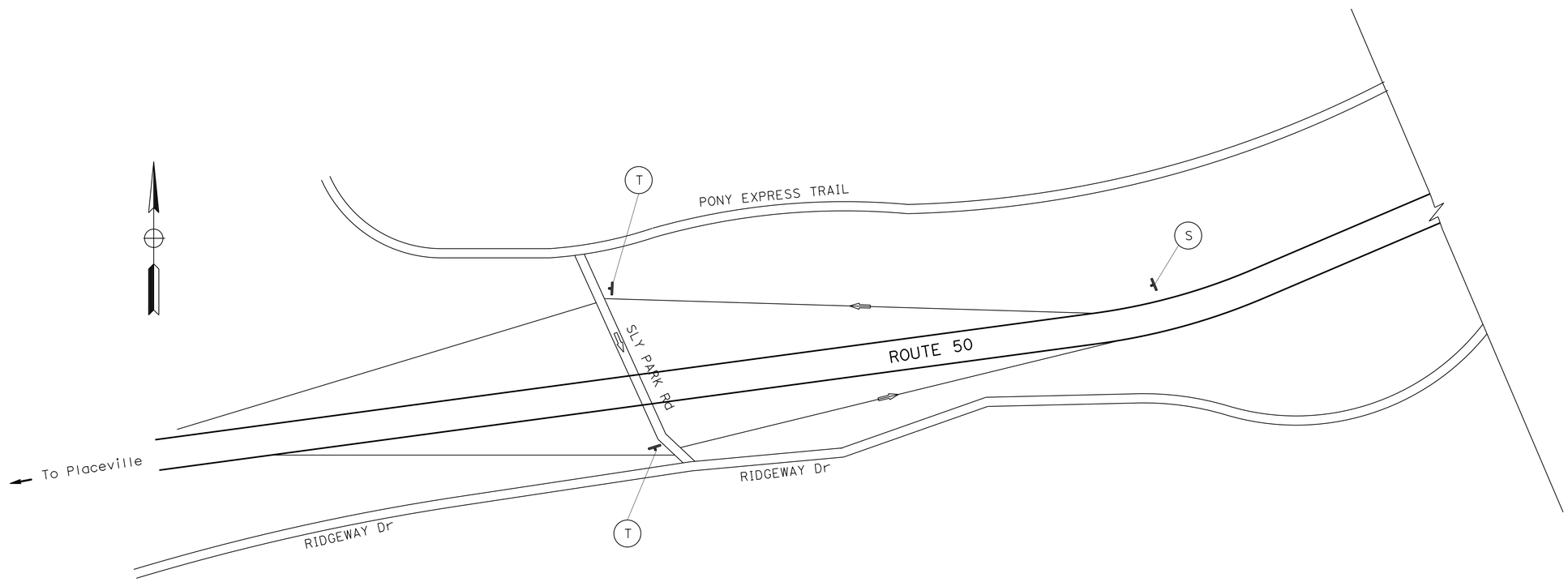

SLY PARK ROAD DETOUR

APPROVED FOR DETOUR WORK ONLY

DETOUR PLAN

NO SCALE

DE-1

STATE OF CALIFORNIA - DEPARTMENT OF TRANSPORTATION
Caltrans
NORTH REGION
DIVISION OF ENGINEERING

FUNCTIONAL SUPERVISOR: NESAR FORMOLI
CALCULATED-DESIGNED BY: WESLEY LEE
CHECKED BY: NARAYAN SELWAL
REVISED BY
DATE REVISED

LAST REVISION 00-00-00
DATE PLOTTED => 23-OCT-2013
TIME PLOTTED => 10:12

Dist	COUNTY	ROUTE	POST MILES TOTAL PROJECT	SHEET No.	TOTAL SHEETS
03	ED	50	R30.7/R31.7	41	119

REGISTERED CIVIL ENGINEER 8-19-13 DATE

8-19-13
PLANS APPROVAL DATE

REGISTERED PROFESSIONAL ENGINEER
N. SELWAL
No. 74816
Exp. 12-31-13
CIVIL
STATE OF CALIFORNIA

THE STATE OF CALIFORNIA OR ITS OFFICERS OR AGENTS SHALL NOT BE RESPONSIBLE FOR THE ACCURACY OR COMPLETENESS OF SCANNED COPIES OF THIS PLAN SHEET.

NOTE:

SIGN (L) IS THE SAME SIGN THAT IS SHOWN ON SHEET SCD-1 AND THQ-2.

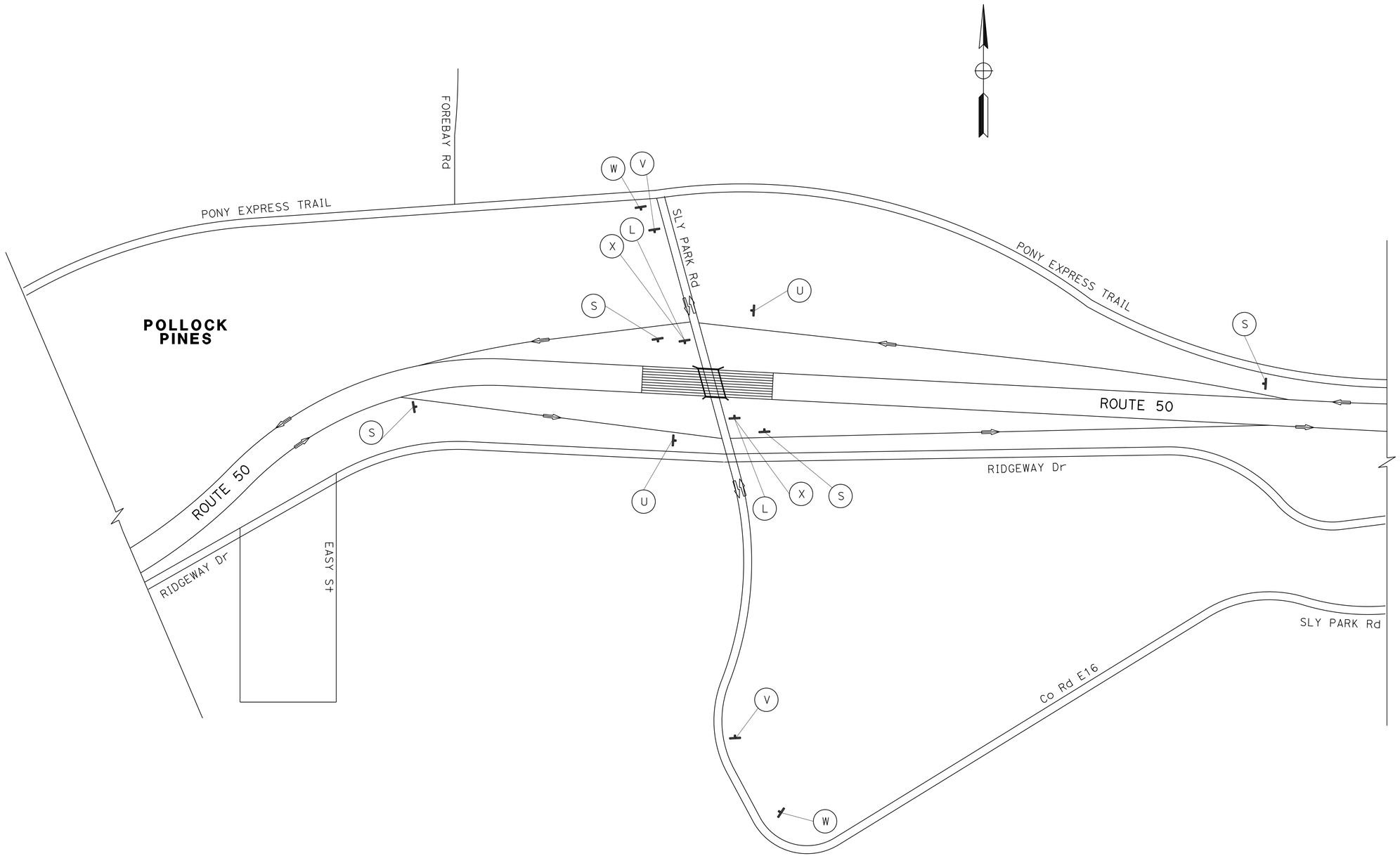

SLY PARK ROAD DETOUR

DETOUR PLAN

NO SCALE

APPROVED FOR DETOUR WORK ONLY

DE-2

STATE OF CALIFORNIA - DEPARTMENT OF TRANSPORTATION
Caltrans
NORTH REGION
DIVISION OF ENGINEERING

FUNCTIONAL SUPERVISOR: NESAR FORMOLI
CALCULATED-DESIGNED BY: WESLEY LEE
CHECKED BY: NARAYAN SELWAL
REVISED BY
DATE REVISED

LAST REVISION 00-00-00
DATE PLOTTED => 23-OCT-2013
TIME PLOTTED => 10:12

Dist	COUNTY	ROUTE	POST MILES TOTAL PROJECT	SHEET No.	TOTAL SHEETS
03	ED	50	R30.7/R31.7	42	119

REGISTERED CIVIL ENGINEER 8-19-13 DATE

8-19-13
PLANS APPROVAL DATE

REGISTERED PROFESSIONAL ENGINEER
N. SELWAL
No. 74816
Exp 12-31-13
CIVIL
STATE OF CALIFORNIA

THE STATE OF CALIFORNIA OR ITS OFFICERS OR AGENTS SHALL NOT BE RESPONSIBLE FOR THE ACCURACY OR COMPLETENESS OF SCANNED COPIES OF THIS PLAN SHEET.

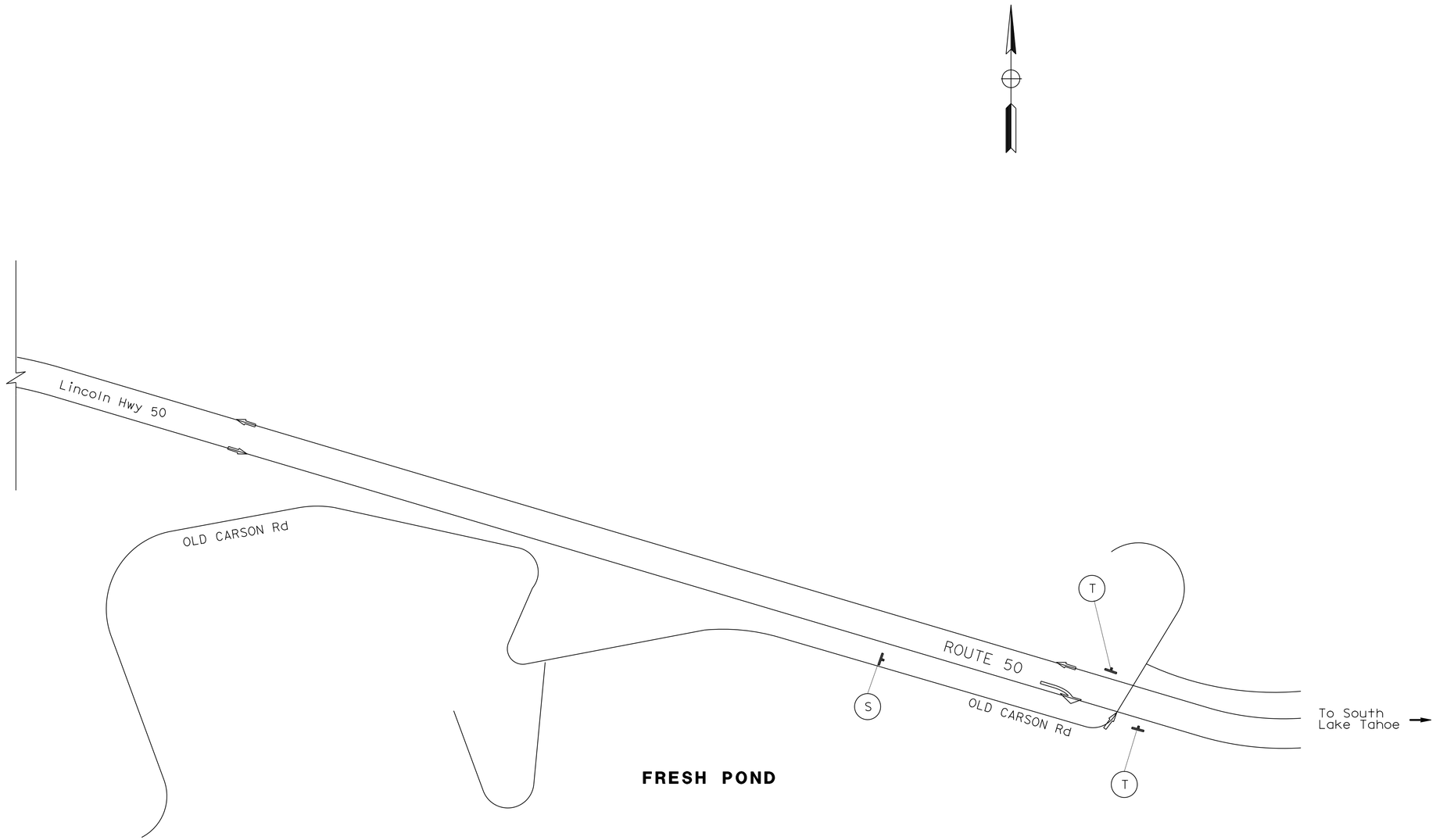

SLY PARK ROAD DETOUR

APPROVED FOR DETOUR WORK ONLY

DETOUR PLAN

NO SCALE

DE-3

STATE OF CALIFORNIA - DEPARTMENT OF TRANSPORTATION
Caltrans
NORTH REGION
DIVISION OF ENGINEERING

FUNCTIONAL SUPERVISOR: NESAR FORMOLI
CALCULATED-DESIGNED BY: WESLEY LEE
CHECKED BY: NARAYAN SELWAL
REVISED BY
DATE REVISED

LAST REVISION 00-00-00
DATE PLOTTED => 23-OCT-2013
TIME PLOTTED => 10:12

Dist	COUNTY	ROUTE	POST MILES TOTAL PROJECT	SHEET No.	TOTAL SHEETS
03	ED	50	R30.7/R31.7	43	119

REGISTERED CIVIL ENGINEER 8-19-13 DATE

8-19-13
PLANS APPROVAL DATE

REGISTERED PROFESSIONAL ENGINEER
N. SELWAL
No. 74816
Exp 12-31-13
CIVIL
STATE OF CALIFORNIA

THE STATE OF CALIFORNIA OR ITS OFFICERS OR AGENTS SHALL NOT BE RESPONSIBLE FOR THE ACCURACY OR COMPLETENESS OF SCANNED COPIES OF THIS PLAN SHEET.

LEGEND

	LIMIT OF STRIPING PATTERN
	CHANGE IN STRIPING PATTERN
No.	PAVEMENT DELINEATION DETAIL NUMBER
No./R	PAVEMENT DELINEATION DETAIL NUMBER RECESSED TRAFFIC STRIPE
LL/R	LIMIT LINE (RECESSED)
	TYPE I(24') ARROW
	TYPE V ARROW
S	"STOP" PAVEMENT MARKING
A	"AHEAD" PAVEMENT MARKING
Sht-No.	ROADSIDE SIGN NUMBER
<CA>	CALIFORNIA SIGN CODE
	SIGN - SSBM
	REMOVE ROADSIDE SIGN
No.	BRIDGE MOUNTED SIGN NUMBER

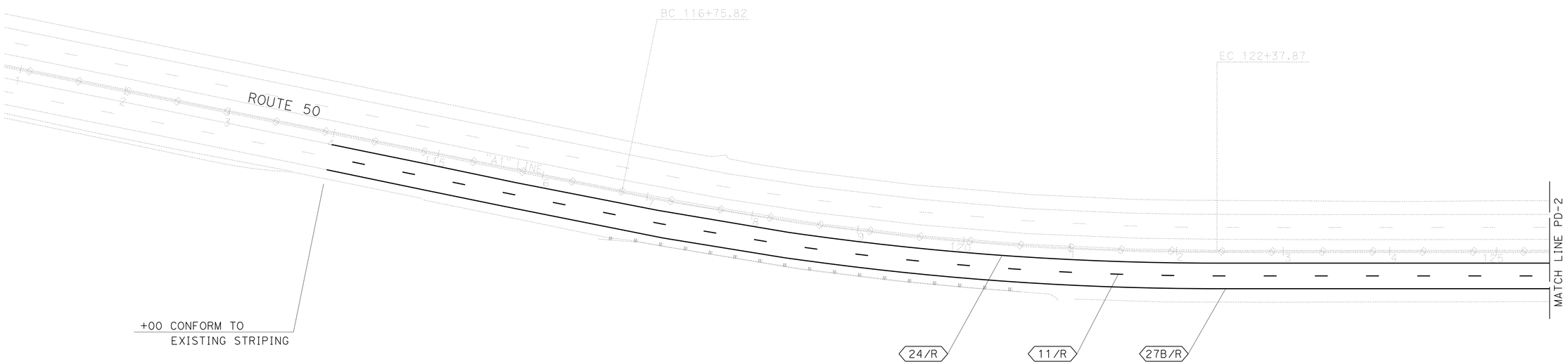

NOTES:

1. ALL LANES SHALL BE 12' WIDE UNLESS OTHERWISE SHOWN.
2. ALL EXISTING SIGNS NOT SHOWN FOR REMOVAL, OR RESETTING SHALL REMAIN IN PLACE.
3. ALL SIGN CODES SHOWN ARE FEDERAL SIGN CODES UNLESS OTHERWISE DESIGNATED AS CALIFORNIA SIGN CODES.

PAVEMENT DELINEATION AND SIGN PLAN

SCALE: 1"=50'

PD-1

APPROVED FOR PAVEMENT DELINEATION AND SIGN WORK ONLY

STATE OF CALIFORNIA - DEPARTMENT OF TRANSPORTATION
Caltrans
TRAFFIC

FUNCTIONAL SUPERVISOR: SERGIO ACEVES
CALCULATED-DESIGNED BY: CHUCK COOK
CHECKED BY: NARAYAN SELWAL
REVISED BY
DATE REVISED

LAST REVISION 07-08-13
DATE PLOTTED => 23-OCT-2013
TIME PLOTTED => 10:12

Dist	COUNTY	ROUTE	POST MILES TOTAL PROJECT	SHEET No.	TOTAL SHEETS
03	ED	50	R30.7/R31.7	44	119

REGISTERED CIVIL ENGINEER 8-19-13 DATE

8-19-13
PLANS APPROVAL DATE

REGISTERED PROFESSIONAL ENGINEER
N. SELWAL
No. 74816
Exp 12-31-13
CIVIL
STATE OF CALIFORNIA

THE STATE OF CALIFORNIA OR ITS OFFICERS OR AGENTS SHALL NOT BE RESPONSIBLE FOR THE ACCURACY OR COMPLETENESS OF SCANNED COPIES OF THIS PLAN SHEET.

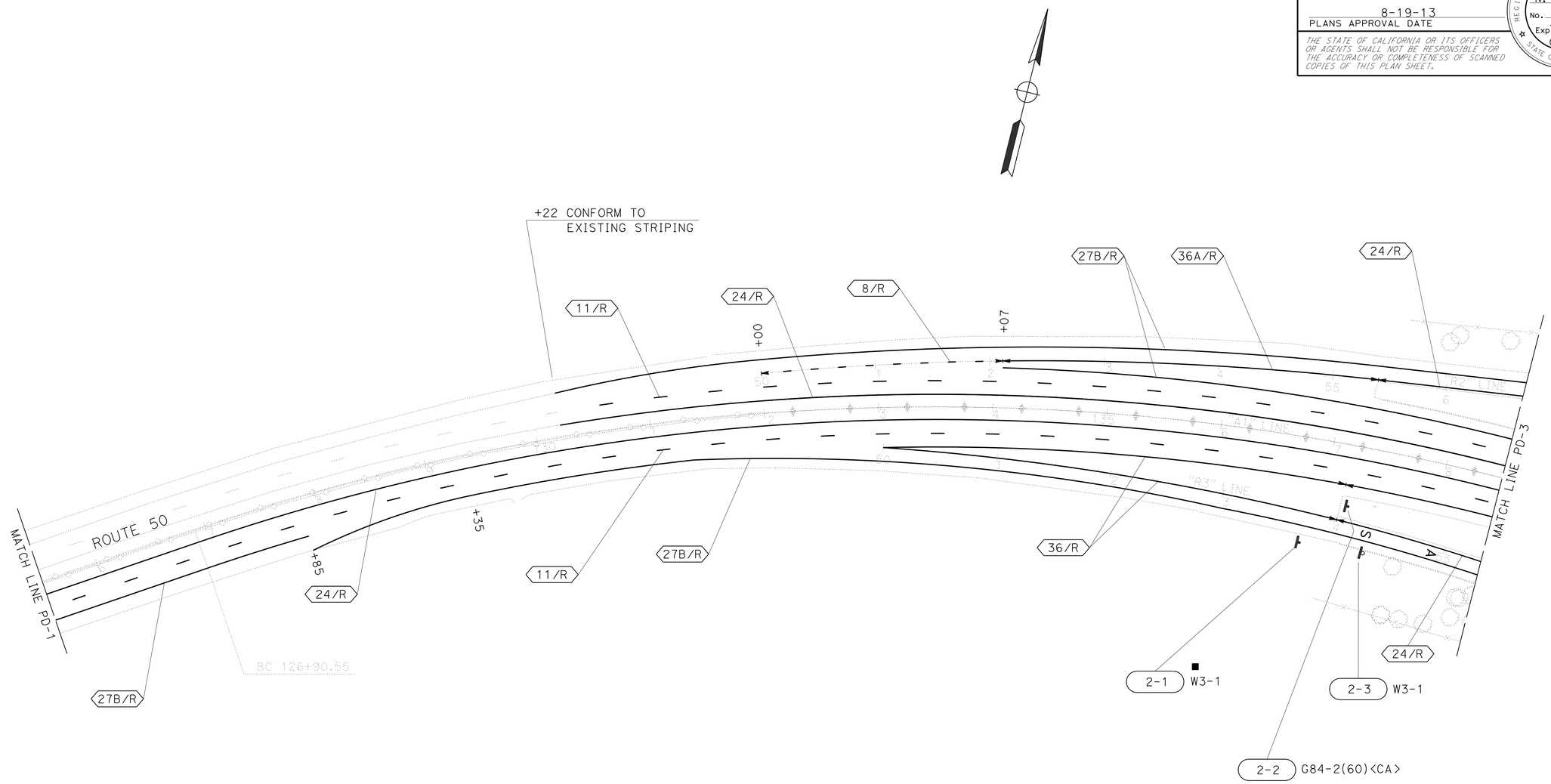

PAVEMENT DELINEATION AND SIGN PLAN

SCALE: 1"=50'

PD-2

APPROVED FOR PAVEMENT DELINEATION AND SIGN WORK ONLY

STATE OF CALIFORNIA - DEPARTMENT OF TRANSPORTATION
Caltrans
TRAFFIC

FUNCTIONAL SUPERVISOR: SERGIO ACEVES
CALCULATED-DESIGNED BY: CHUCK COOK
CHECKED BY: NARAYAN SELWAL
REVISED BY
DATE REVISED

LAST REVISION 07-08-13
DATE PLOTTED => 23-OCT-2013
TIME PLOTTED => 10:12

Dist	COUNTY	ROUTE	POST MILES TOTAL PROJECT	SHEET No.	TOTAL SHEETS
03	ED	50	R30.7/R31.7	45	119

REGISTERED CIVIL ENGINEER 8-19-13 DATE

8-19-13
PLANS APPROVAL DATE

REGISTERED PROFESSIONAL ENGINEER N. SELWAL No. 74816 Exp. 12-31-13 CIVIL STATE OF CALIFORNIA

THE STATE OF CALIFORNIA OR ITS OFFICERS OR AGENTS SHALL NOT BE RESPONSIBLE FOR THE ACCURACY OR COMPLETENESS OF SCANNED COPIES OF THIS PLAN SHEET.

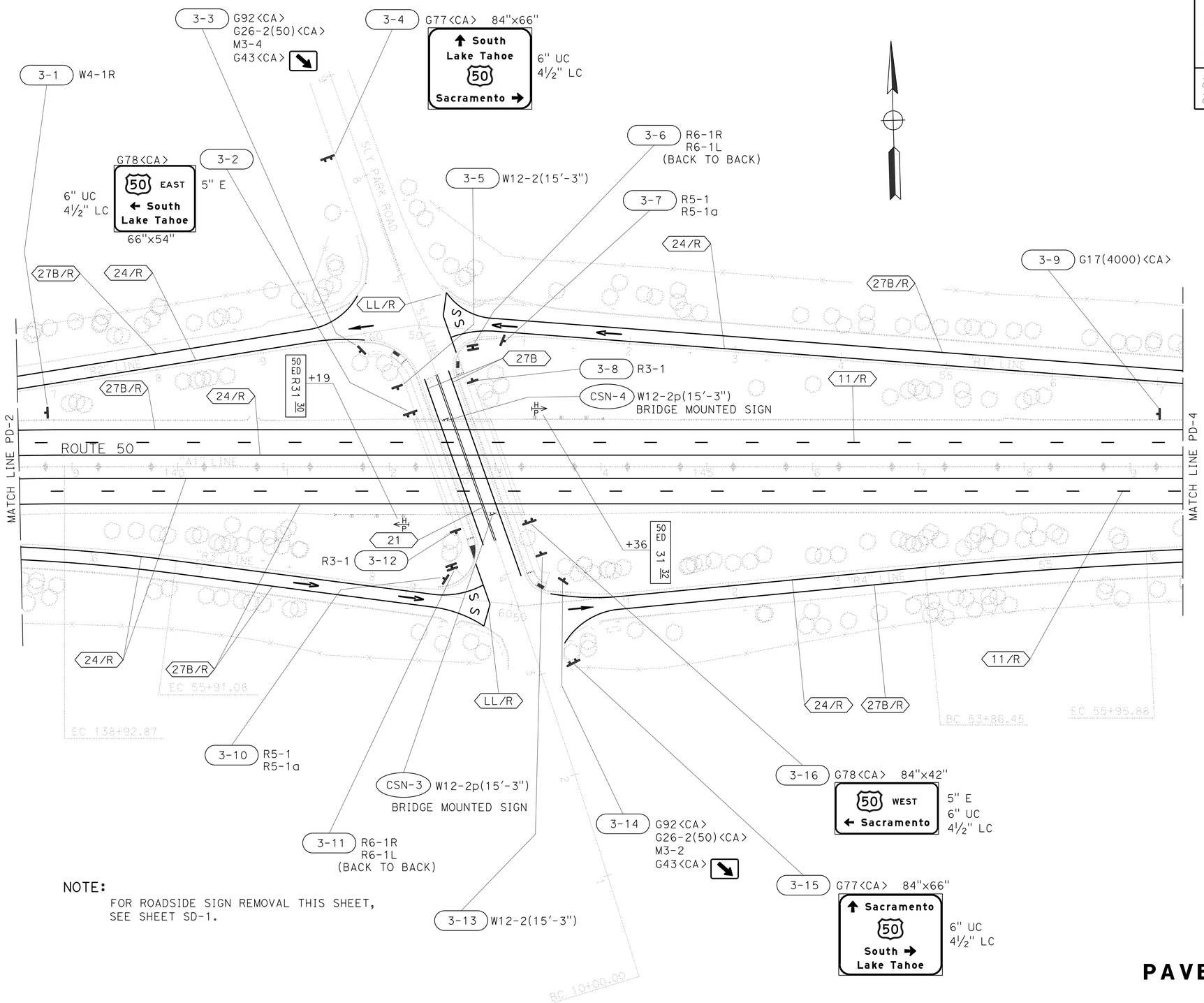

NOTE:
FOR ROADSIDE SIGN REMOVAL THIS SHEET, SEE SHEET SD-1.

PAVEMENT DELINEATION AND SIGN PLAN

SCALE: 1"=50'

PD-3

APPROVED FOR PAVEMENT DELINEATION AND SIGN WORK ONLY

STATE OF CALIFORNIA - DEPARTMENT OF TRANSPORTATION
Caltrans
TRAFFIC

FUNCTIONAL SUPERVISOR: SERGIO ACEVES
CALCULATED-DESIGNED BY: NARAYAN SELWAL
CHECKED BY: CHUCK COOK
REVISED BY
DATE REVISED

LAST REVISION 08-07-13
DATE PLOTTED => 23-OCT-2013
TIME PLOTTED => 10:12

Dist	COUNTY	ROUTE	POST MILES TOTAL PROJECT	SHEET No.	TOTAL SHEETS
03	ED	50	R30.7/R31.7	46	119

REGISTERED CIVIL ENGINEER 8-19-13 DATE

8-19-13
PLANS APPROVAL DATE

REGISTERED PROFESSIONAL ENGINEER
N. SELWAL
No. 74816
Exp 12-31-13
CIVIL
STATE OF CALIFORNIA

THE STATE OF CALIFORNIA OR ITS OFFICERS OR AGENTS SHALL NOT BE RESPONSIBLE FOR THE ACCURACY OR COMPLETENESS OF SCANNED COPIES OF THIS PLAN SHEET.

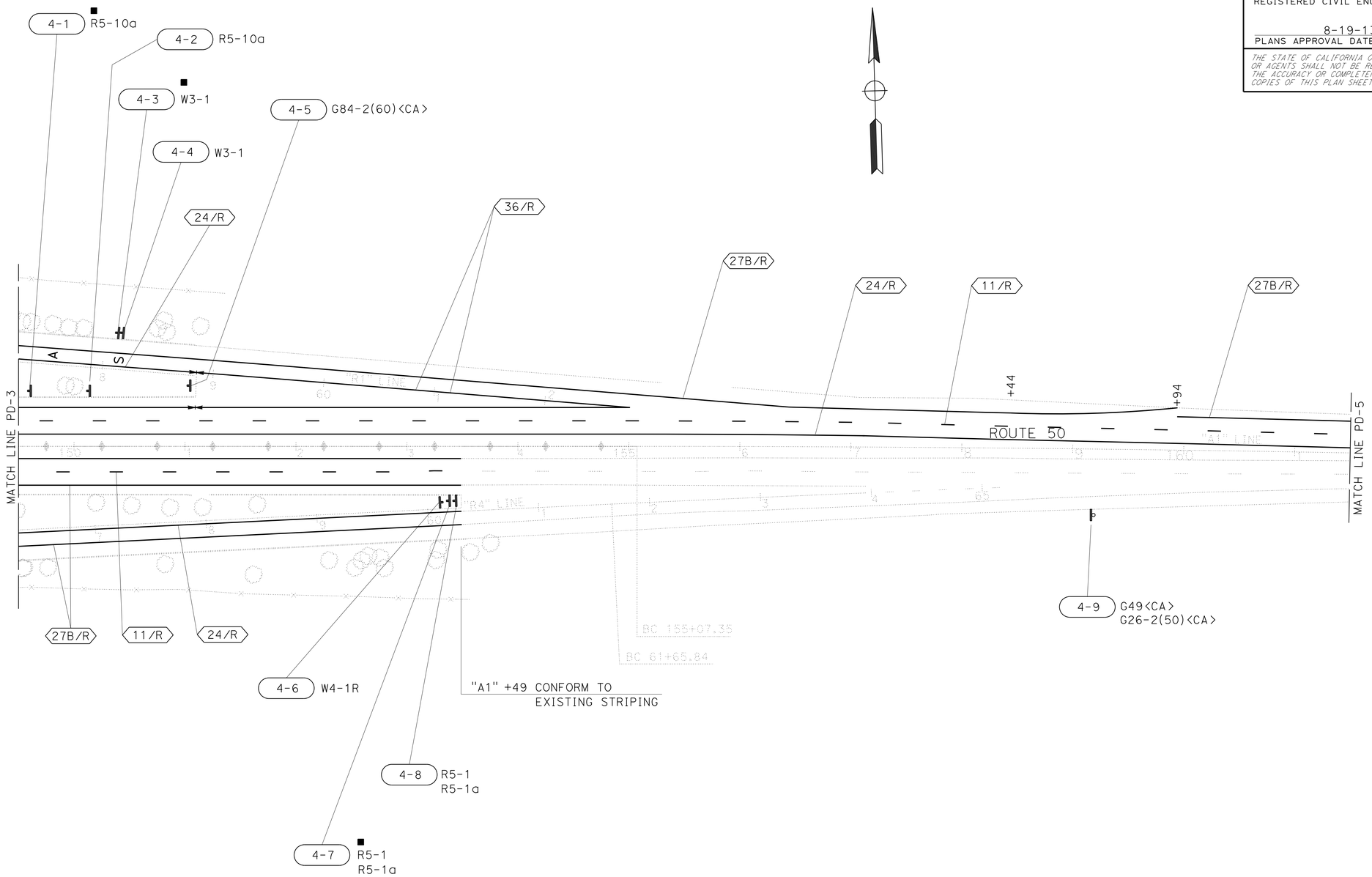

PAVEMENT DELINEATION AND SIGN PLAN

SCALE: 1"=50'

PD-4

APPROVED FOR PAVEMENT DELINEATION AND SIGN WORK ONLY

STATE OF CALIFORNIA - DEPARTMENT OF TRANSPORTATION
Caltrans
TRAFFIC

FUNCTIONAL SUPERVISOR: SERGIO ACEVES
CALCULATED-DESIGNED BY: NARAYAN SELWAL
CHECKED BY: CHUCK COOK
REVISED BY
DATE REVISED

LAST REVISION 07-08-13 | DATE PLOTTED => 23-OCT-2013 | TIME PLOTTED => 10:12

Dist	COUNTY	ROUTE	POST MILES TOTAL PROJECT	SHEET No.	TOTAL SHEETS
03	ED	50	R30.7/R31.7	47	119

REGISTERED CIVIL ENGINEER 8-19-13 DATE

8-19-13
PLANS APPROVAL DATE

REGISTERED PROFESSIONAL ENGINEER
N. SELWAL
No. 74816
Exp 12-31-13
CIVIL
STATE OF CALIFORNIA

THE STATE OF CALIFORNIA OR ITS OFFICERS OR AGENTS SHALL NOT BE RESPONSIBLE FOR THE ACCURACY OR COMPLETENESS OF SCANNED COPIES OF THIS PLAN SHEET.

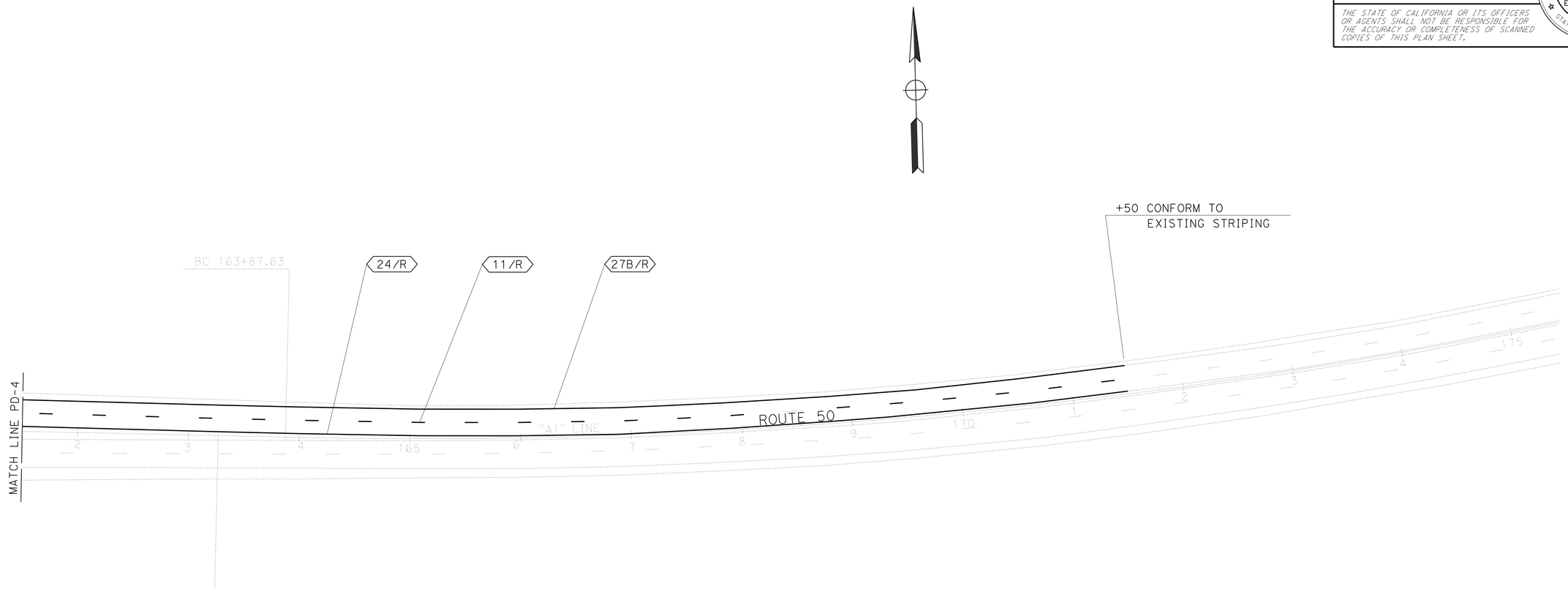

PAVEMENT DELINEATION AND SIGN PLAN

SCALE: 1"=50'

PD-5

APPROVED FOR PAVEMENT DELINEATION AND SIGN WORK ONLY

STATE OF CALIFORNIA - DEPARTMENT OF TRANSPORTATION
Caltrans
TRAFFIC

FUNCTIONAL SUPERVISOR: SERGIO ACEVES
CALCULATED-DESIGNED BY: CHUCK COOK
CHECKED BY: NARAYAN SELWAL
REVISED BY
DATE REVISED

LAST REVISION 07-08-13
DATE PLOTTED => 23-OCT-2013
TIME PLOTTED => 10:12

Dist	COUNTY	ROUTE	POST MILES TOTAL PROJECT	SHEET No.	TOTAL SHEETS
03	ED	50	R30.7/R31.7	48	119

REGISTERED CIVIL ENGINEER 8-19-13 DATE

8-19-13
PLANS APPROVAL DATE

REGISTERED PROFESSIONAL ENGINEER N. SELWAL No. 74816 Exp 12-31-13 CIVIL STATE OF CALIFORNIA

THE STATE OF CALIFORNIA OR ITS OFFICERS OR AGENTS SHALL NOT BE RESPONSIBLE FOR THE ACCURACY OR COMPLETENESS OF SCANNED COPIES OF THIS PLAN SHEET.

4" TWO-COMPONENT PAINT TRAFFIC STRIPE (RECESSED)

DETAIL NUMBER	LINEAR FEET
24	9,648
27B	9,968
TOTAL	19,616

4" TWO-COMPONENT PAINT TRAFFIC STRIPE

DETAIL NUMBER	LINEAR FEET
21	332
27B	372
TOTAL	704

4" TWO-COMPONENT PAINT TRAFFIC STRIPE (RECESSED, BROKEN 17 - 7)

DETAIL NUMBER	LINEAR FEET
8	207
TOTAL	207

TWO-COMPONENT PAINT PAVEMENT MARKING

DESCRIPTION	NUMBER	SQUARE FEET
TYPE I(24') ARROW	2	62
TYPE V ARROW	4	132
"STOP"	6	132
"AHEAD"	2	62
TOTAL		388

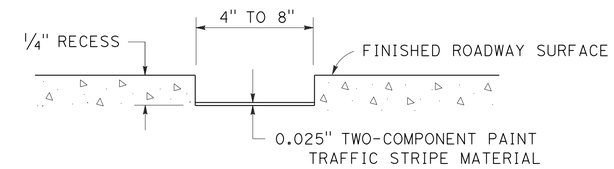

DETAIL FOR RECESSED TWO-COMPONENT PAINT TRAFFIC STRIPE

NO SCALE

4" TWO-COMPONENT PAINT TRAFFIC STRIPE (RECESSED, BROKEN 36 - 12)

DETAIL NUMBER	LINEAR FEET
11	8077
TOTAL	8077

TWO-COMPONENT PAINT PAVEMENT MARKING (RECESSED)

DESCRIPTION	NUMBER	SQUARE FEET
LIMIT LINE	2	143
TOTAL		143

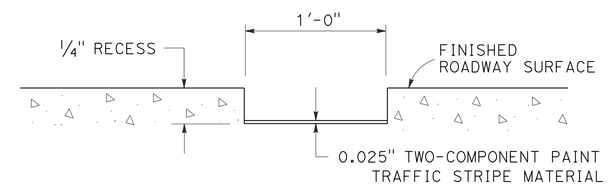

DETAIL FOR RECESSED TWO-COMPONENT PAINT PAVEMENT MARKING (LIMIT LINE)

NO SCALE

8" TWO-COMPONENT PAINT TRAFFIC STRIPE (RECESSED)

DETAIL NUMBER	LINEAR FEET
36	1612
36A	320
TOTAL	1932

HIGHWAY POST MARKER

SHEET NUMBER	HIGHWAY POST MARKER
	EACH
PD-3	2
TOTAL	2

PAVEMENT DELINEATION DETAILS AND QUANTITIES

PDQ-1

STATE OF CALIFORNIA - DEPARTMENT OF TRANSPORTATION
Caltrans
TRAFFIC

FUNCTIONAL SUPERVISOR: SERGIO ACEVES
CALCULATED-DESIGNED BY: NARAYAN SELWAL
CHECKED BY: CHUCK COOK
REVISED BY
DATE REVISED

LAST REVISION 07-08-13
DATE PLOTTED => 23-OCT-2013
TIME PLOTTED => 10:12

Dist	COUNTY	ROUTE	POST MILES TOTAL PROJECT	SHEET No.	TOTAL SHEETS
03	ED	50	R30.7/R31.7	49	119

REGISTERED CIVIL ENGINEER 8-19-13 DATE

8-19-13
PLANS APPROVAL DATE

REGISTERED PROFESSIONAL ENGINEER N. SELWAL No. 74816 Exp 12-31-13 CIVIL STATE OF CALIFORNIA

THE STATE OF CALIFORNIA OR ITS OFFICERS OR AGENTS SHALL NOT BE RESPONSIBLE FOR THE ACCURACY OR COMPLETENESS OF SCANNED COPIES OF THIS PLAN SHEET.

LEGEND

(Sht-No.)	ROADSIDE SIGN NUMBER
<CA>	CALIFORNIA SIGN CODE
■	REMOVE ROADSIDE SIGN
▲	RESET ROADSIDE SIGN

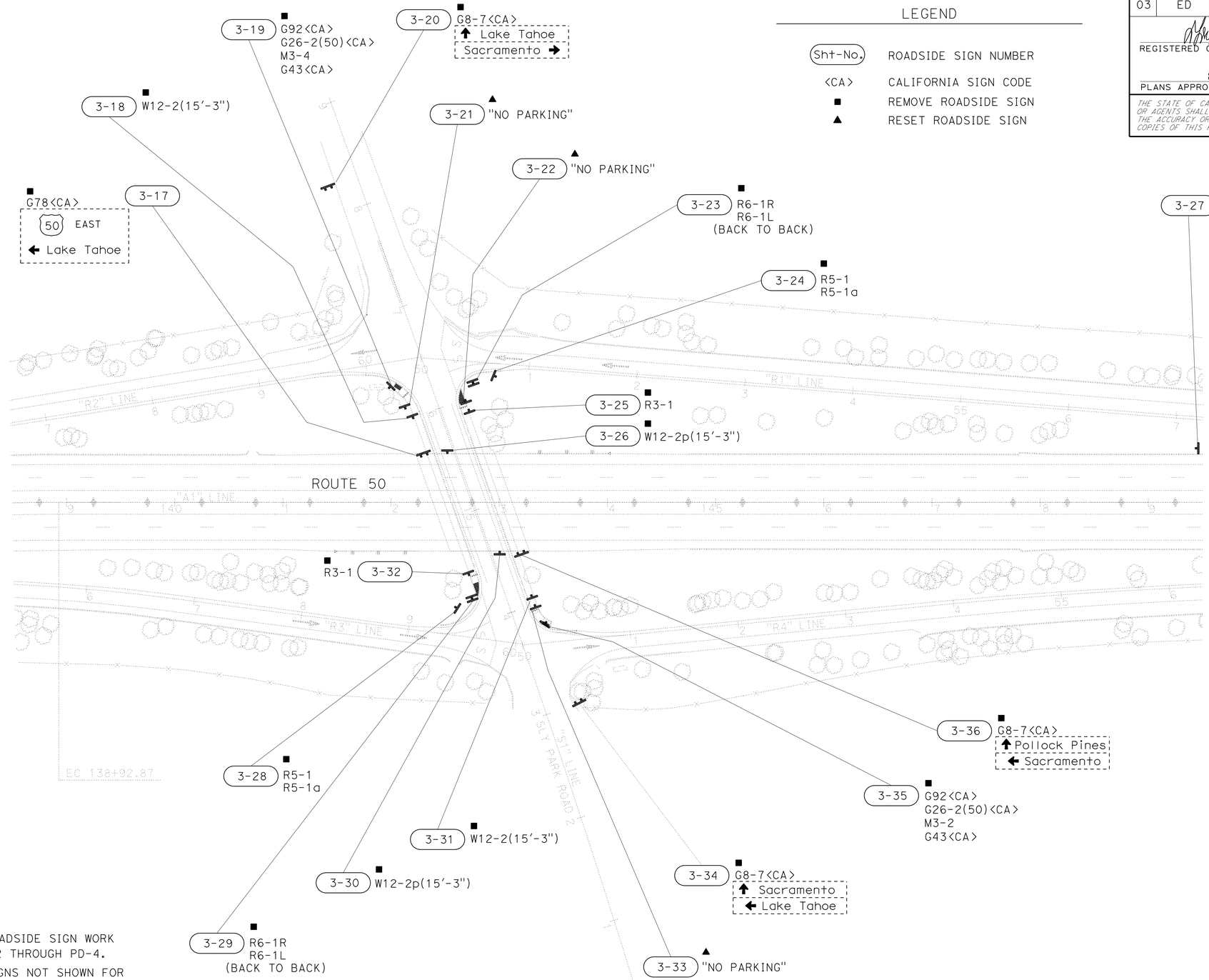

NOTES:

1. FOR ADDITION ROADSIDE SIGN WORK SEE SHEETS PD-2 THROUGH PD-4.
2. ALL EXISTING SIGNS NOT SHOWN FOR REMOVAL OR RESETTING SHALL REMAIN IN PLACE.
3. ALL SIGN CODES SHOWN ARE FEDERAL SIGN CODES UNLESS OTHERWISE DESIGNATED AS CALIFORNIA SIGN CODES.

SIGN DETAILS
EXISTING SIGN RESETTING AND REMOVAL DETAILS
SCALE: 1"=50'

APPROVED FOR SIGN WORK ONLY

SD-1

STATE OF CALIFORNIA - DEPARTMENT OF TRANSPORTATION
Caltrans
TRAFFIC

FUNCTIONAL SUPERVISOR: SERGIO ACEVES
CALCULATED-DESIGNED BY: CHUCK COOK
CHECKED BY: NARAYAN SELWAL
REVISED BY
DATE REVISED

LAST REVISION 07-08-13
DATE PLOTTED => 23-OCT-2013
TIME PLOTTED => 10:12

Dist	COUNTY	ROUTE	POST MILES TOTAL PROJECT	SHEET No.	TOTAL SHEETS
03	ED	50	R30.7/R31.7	50	119

REGISTERED CIVIL ENGINEER 8-19-13 DATE

8-19-13
PLANS APPROVAL DATE

REGISTERED PROFESSIONAL ENGINEER N. SELWAL No. 74816 Exp 12-31-13 CIVIL STATE OF CALIFORNIA

THE STATE OF CALIFORNIA OR ITS OFFICERS OR AGENTS SHALL NOT BE RESPONSIBLE FOR THE ACCURACY OR COMPLETENESS OF SCANNED COPIES OF THIS PLAN SHEET.

G26-1(50)<CA>

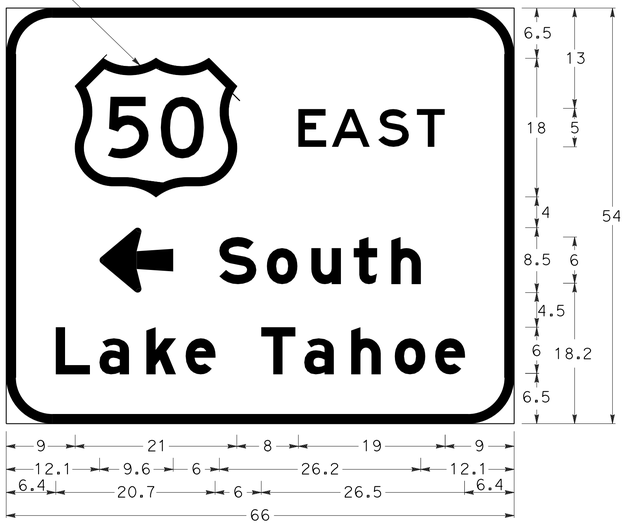

1" BORDER WITH 6" RADIUS
"EAST" E
ARROW - 6"UC- 1 LINE 9.6" 180°
"South" E Mod
"Lake Tahoe" E Mod

G78<CA>
3-2

G26-1(50)<CA>

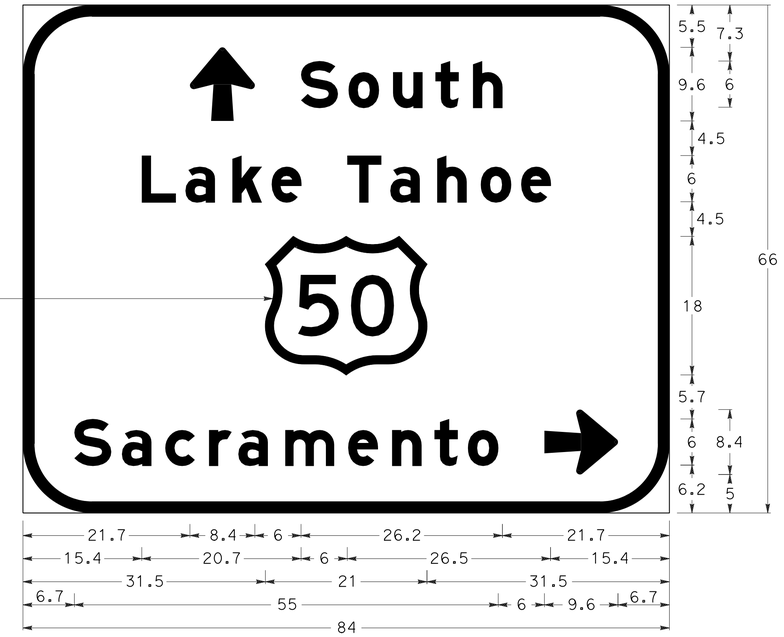

1" BORDER WITH 9" RADIUS
ARROW - 6"UC- 1 LINE 9.6" 90°
"South" E Mod
"Lake Tahoe" E Mod
"Sacramento" E Mod
ARROW - 6"UC- 1 LINE 9.6" 0°

G77<CA>
3-4

G26-1(50)<CA>

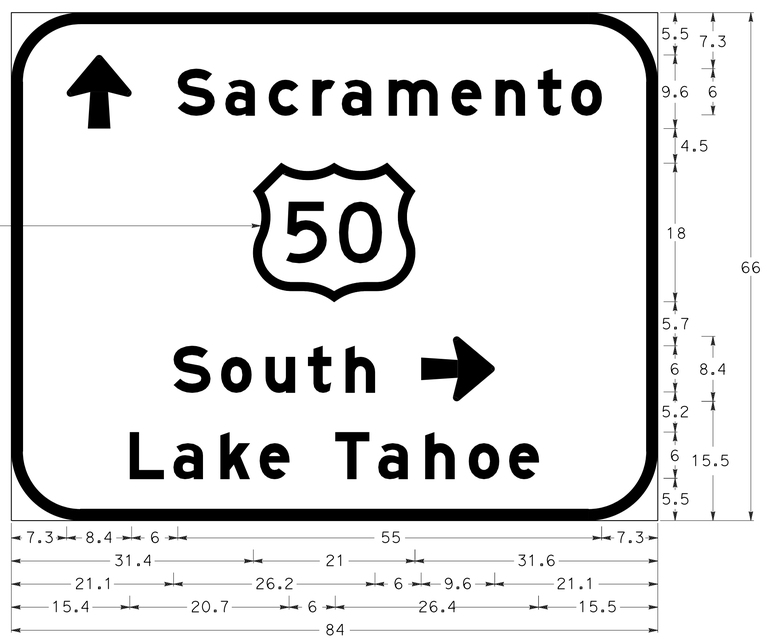

1" BORDER WITH 9" RADIUS
ARROW - 6"UC- 1 LINE 9.6" 90°
"Sacramento" E Mod
"South" E Mod
ARROW - 6"UC- 1 LINE 9.6" 0°
"Lake Tahoe" E Mod

G77<CA>
3-17

G26-1(50)<CA>

1" BORDER WITH 6" RADIUS
"WEST" E
ARROW - 6"UC- 1 LINE 9.6" 180°
"Sacramento" E Mod

G78<CA>
3-18

NOTE:
ALL SIGN PANEL DIMENSIONS ARE IN INCHES.

SIGN DETAILS

NO SCALE

SD-2

STATE OF CALIFORNIA - DEPARTMENT OF TRANSPORTATION
Caltrans
TRAFFIC

FUNCTIONAL SUPERVISOR: SERGIO ACEVES
CALCULATED-DESIGNED BY: NARAYAN SELWAL
CHECKED BY: CHUCK COOK
REVISED BY
DATE REVISED

LAST REVISION 07-09-13
DATE PLOTTED => 23-OCT-2013
TIME PLOTTED => 10:12

Dist	COUNTY	ROUTE	POST MILES TOTAL PROJECT	SHEET No.	TOTAL SHEETS
03	ED	50	R30.7/R31.7	51	119

REGISTERED CIVIL ENGINEER 8-19-13 DATE

8-19-13
PLANS APPROVAL DATE

REGISTERED PROFESSIONAL ENGINEER N. SELWAL No. 74816 Exp 12-31-13 CIVIL STATE OF CALIFORNIA

THE STATE OF CALIFORNIA OR ITS OFFICERS OR AGENTS SHALL NOT BE RESPONSIBLE FOR THE ACCURACY OR COMPLETENESS OF SCANNED COPIES OF THIS PLAN SHEET.

NOTES:

1. THE SIGN POST SHALL HAVE 7/16" DIAMETER PERFORATIONS 1" ON CENTER ON ALL FOUR SIDES FOR THE FULL LENGTH.
2. USE TWO DRIVE RIVETS TO FASTEN ASSEMBLED SIGN AND SIGN POST INTO ANCHOR SLEEVE. INSTALL DRIVE RIVETS INTO THE SIDES FACING TRAFFIC.
3. ALL METAL SIGN POSTS AND ANCHOR SLEEVES SHALL BE GALVANIZED.
4. ALL ANCHOR SLEEVES SHALL BE EMBEDDED IN PCC.
5. BALANCED SINGLE POST INSTALLATIONS OF SINGLE SHEET ALUMINUM PANEL SIGNS REQUIRE BACK BRACES WHEN 2'-10" OR MORE IN LENGTH.
6. WOOD BLOCK SPACERS ARE NOT REQUIRED FOR SIGNS MOUNTED ON METAL POSTS.
7. ATTACH RECTANGULAR SIGN PANEL TO SIGN POST WITH BOLTS AT TOP AND BOTTOM. CENTER MAY BE ATTACHED WITH EITHER BOLT OR 3/8" DRIVE RIVET.
8. ATTACH DIAMOND SIGN PANEL TO SIGN POST WITH BOLT AT CENTER. TOP AND BOTTOM MAY BE ATTACHED WITH EITHER BOLTS OR 3/8" DRIVE RIVETS.
9. FOR DETAILS NOT SHOWN, SEE STANDARD PLANS RS1 AND RS2.

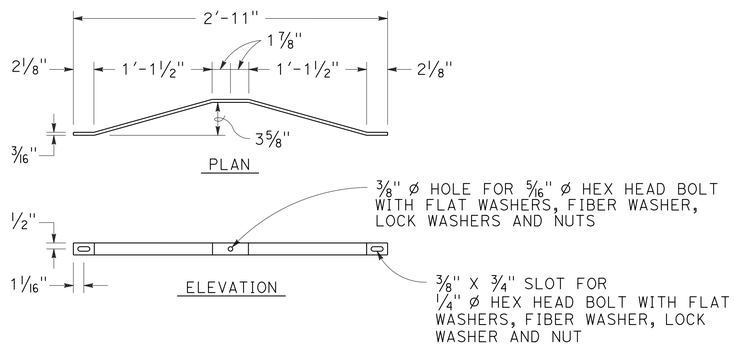

BACK BRACE DETAILS

SEE NOTE 5

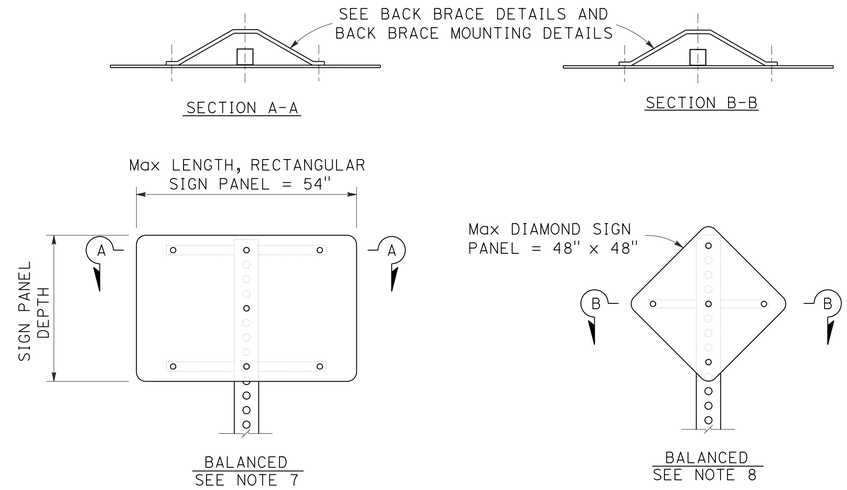

SINGLE POST INSTALLATION

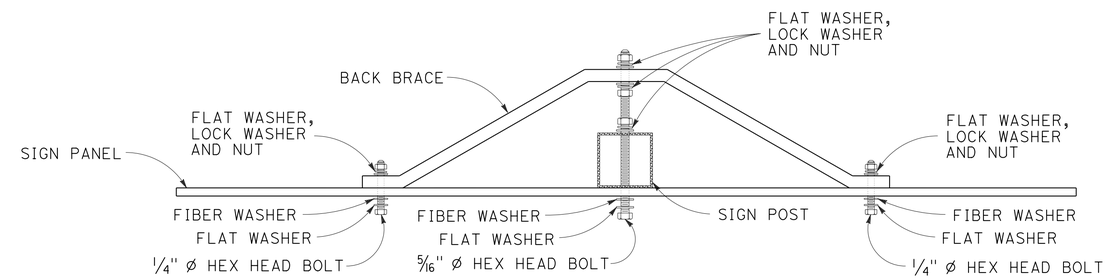

BACK BRACE MOUNTING DETAIL

SEE NOTES 6, 7 AND 8

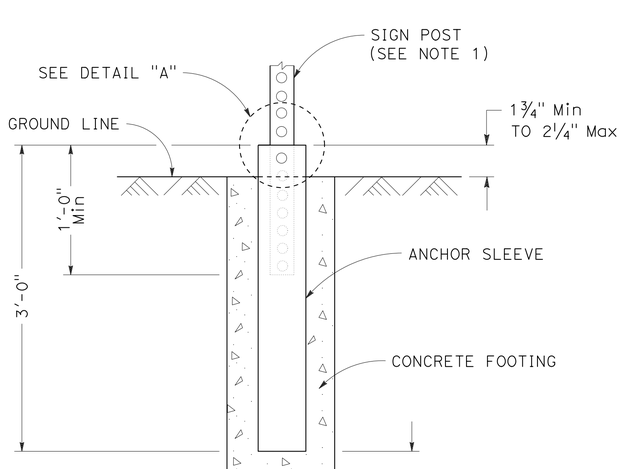

ANCHOR SLEEVE DETAIL

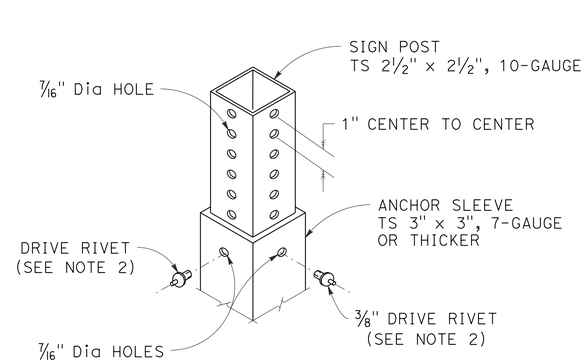

DETAIL "A"

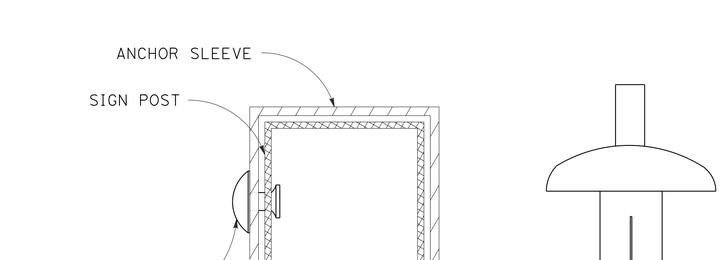

FASTENER DETAILS

SIGN DETAILS

NO SCALE

APPROVED FOR SIGN WORK ONLY

SD-3

STATE OF CALIFORNIA - DEPARTMENT OF TRANSPORTATION
Caltrans® TRAFFIC

FUNCTIONAL SUPERVISOR: SERGIO ACEVES
CALCULATED-DESIGNED BY: NARAYAN SELWAL
CHECKED BY: CHUCK COOK
REVISED BY
DATE REVISED

LAST REVISION 07-09-13 | DATE PLOTTED => 23-OCT-2013 | TIME PLOTTED => 10:12

Dist	COUNTY	ROUTE	POST MILES TOTAL PROJECT	SHEET No.	TOTAL SHEETS
03	ED	50	R30.7/R31.7	52	119

REGISTERED CIVIL ENGINEER 8-19-13 DATE

PLANS APPROVAL DATE 8-19-13

REGISTERED PROFESSIONAL ENGINEER N. SELWAL No. 74816 Exp 12-31-13 CIVIL STATE OF CALIFORNIA

THE STATE OF CALIFORNIA OR ITS OFFICERS OR AGENTS SHALL NOT BE RESPONSIBLE FOR THE ACCURACY OR COMPLETENESS OF SCANNED COPIES OF THIS PLAN SHEET.

OVERHEAD SIGN QUANTITIES

SIGN NUMBER (Sht-No.)	FURNISH SIGN STRUCTURE (BRIDGE MOUNTED WITHOUT WALKWAY)	INSTALL SIGN STRUCTURE (BRIDGE MOUNTED WITHOUT WALKWAY)
	LB	LB
CSN-3	159	159
CSN-4	159	159
TOTAL	318	318

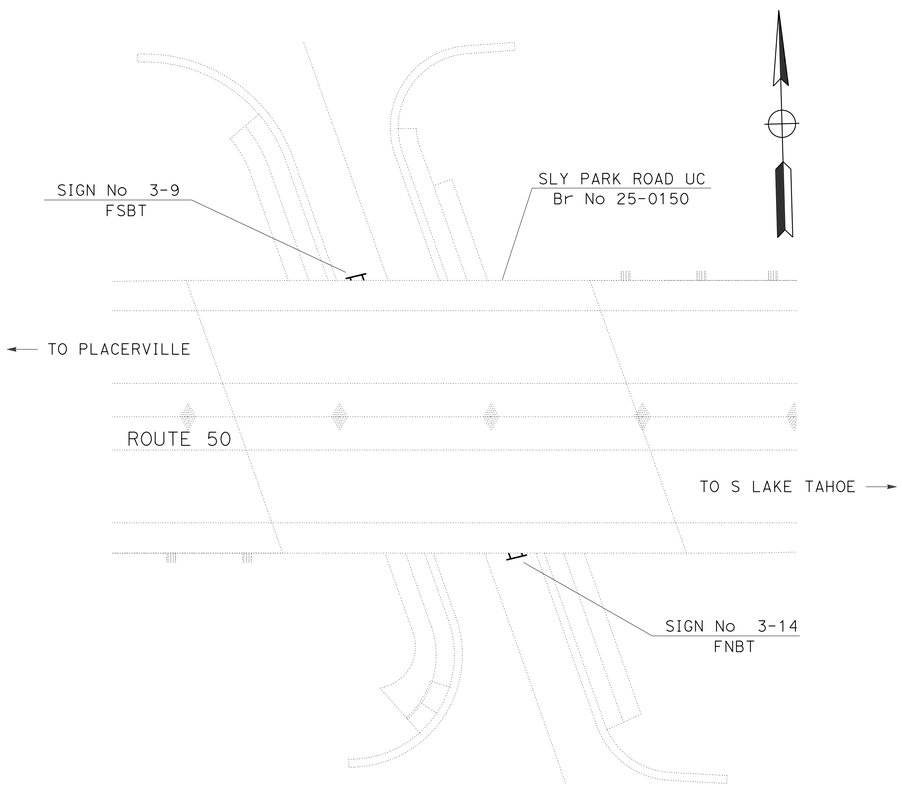

LOCATION PLAN
NO SCALE

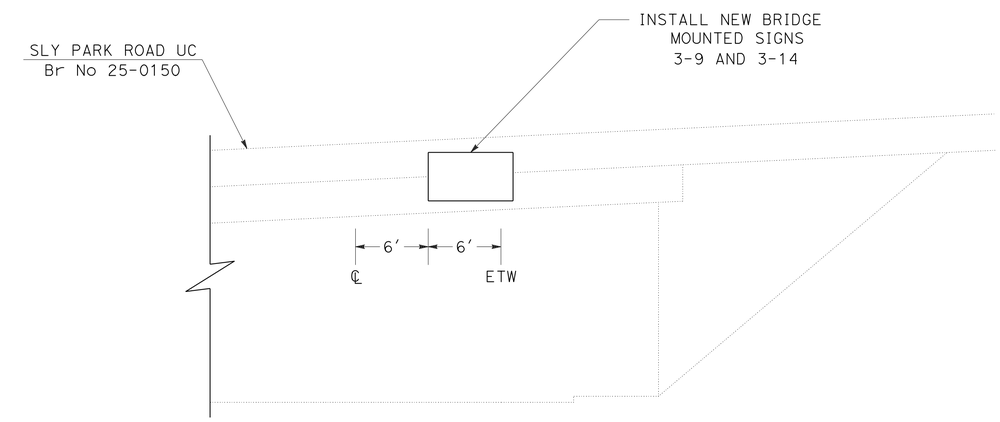

NB AND SB ELEVATION PLAN
NO SCALE

SIGN DETAILS AND QUANTITIES

NO SCALE

SD-4

STATE OF CALIFORNIA - DEPARTMENT OF TRANSPORTATION
TRAFFIC
Caltrans

FUNCTIONAL SUPERVISOR: SERGIO ACEVES
CALCULATED-DESIGNED BY: NARAYAN SELWAL
CHECKED BY: CHUCK COOK
REVISED BY
DATE REVISED

LAST REVISION 07-09-13
DATE PLOTTED => 23-OCT-2013
TIME PLOTTED => 10:12

DIST	COUNTY	ROUTE	POST MILES TOTAL PROJECT	SHEET No.	TOTAL SHEETS
03	ED	50	R30.7/R31.7	53	119

REGISTERED CIVIL ENGINEER 8/1/13 DATE

8-19-13
PLANS APPROVAL DATE

REGISTERED PROFESSIONAL ENGINEER TAMARA S. MARCHENKO No. C76837 Exp. 12/31/13 CIVIL STATE OF CALIFORNIA

The State of California or its officers or agents shall not be responsible for the accuracy or completeness of electronic copies of this plan sheet.

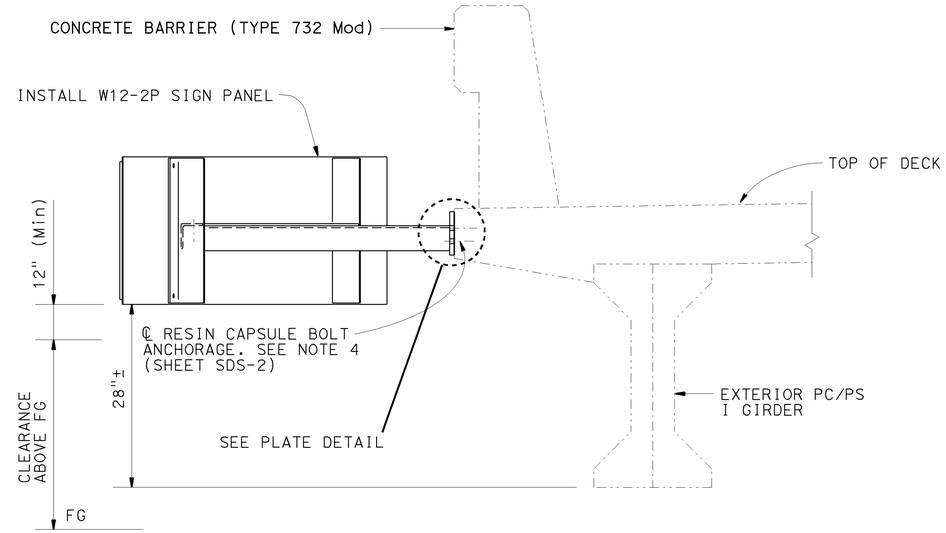

TYPICAL SECTION

LEGEND

Indicates existing structure

Indicates new construction

NOTES:

1. For sign locations, see "SIGN PLANS" sheet SD-4.
2. Resin capsule bolt must not interfere with existing reinforcement.
3. Contractor must verify reinforcement location before drilling and adjust plate location to avoid existing reinforcement.

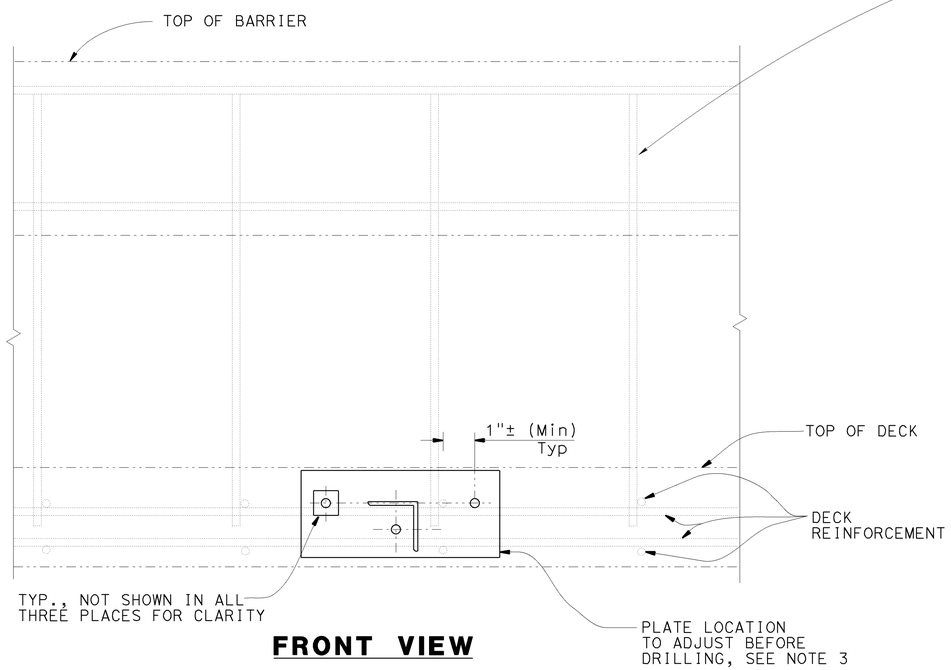

FRONT VIEW

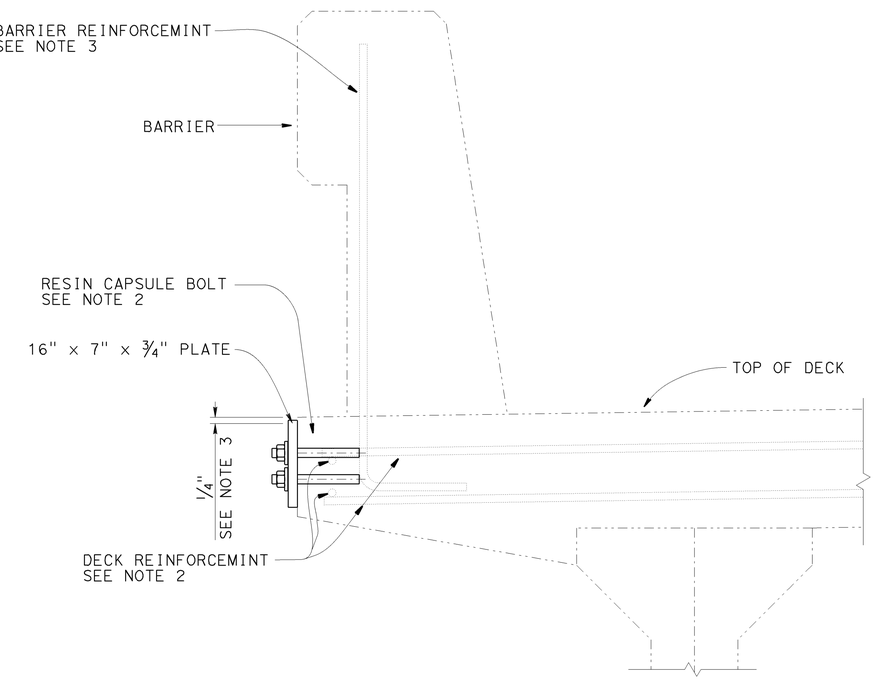

SIDE VIEW

NOTE:
THE CONTRACTOR SHALL VERIFY ALL CONTROLLING FIELD DIMENSIONS BEFORE ORDERING OR FABRICATING ANY MATERIAL.

PLATE DETAIL

BRANCH CHIEF DAVID NEUMANN	DESIGN	BY T MARCHENKO	CHECKED A GUTIERREZ
	DETAILS	BY H NGUYEN/S JIANG	CHECKED T MARCHENKO
	QUANTITIES	BY T MARCHENKO	CHECKED X A GUTIERREZ

STATE OF CALIFORNIA
DEPARTMENT OF TRANSPORTATION

DIVISION OF ENGINEERING SERVICES
STRUCTURE DESIGN
SPECIAL DESIGN BRANCH

BRIDGE NO. 25-0150
POST MILE 31.30

BRIDGE MOUNTED SIGNS - SKEWED
TYPICAL SECTIONS

SDS-1

STRUCTURES DESIGN SPECIAL DESIGN SHEET (ENGLISH) (REV. 09-01-10)

ORIGINAL SCALE IN INCHES FOR REDUCED PLANS 0 1 2 3

UNIT: 3619
PROJECT NUMBER & PHASE: 0300000072
CONTRACT NO.: 03-0F2201

DISREGARD PRINTS BEARING EARLIER REVISION DATES

REVISION DATES 4-25-13 6-27-13

SHEET 1 OF 2

FILE => 03-0f2201a.dgn

USERNAME => s128478 DATE PLOTTED => 12-AUG-2013 TIME PLOTTED => 07:59

DIST	COUNTY	ROUTE	POST MILES TOTAL PROJECT	SHEET No.	TOTAL SHEETS
03	ED	50	R30.7/R31.7	54	119

REGISTERED CIVIL ENGINEER — DATE 8/1/13

8-19-13
PLANS APPROVAL DATE

REGISTERED PROFESSIONAL ENGINEER TAMARA S. MARCHENKO No. C76837 Exp. 12/31/13 CIVIL STATE OF CALIFORNIA

The State of California or its officers or agents shall not be responsible for the accuracy or completeness of electronic copies of this plan sheet.

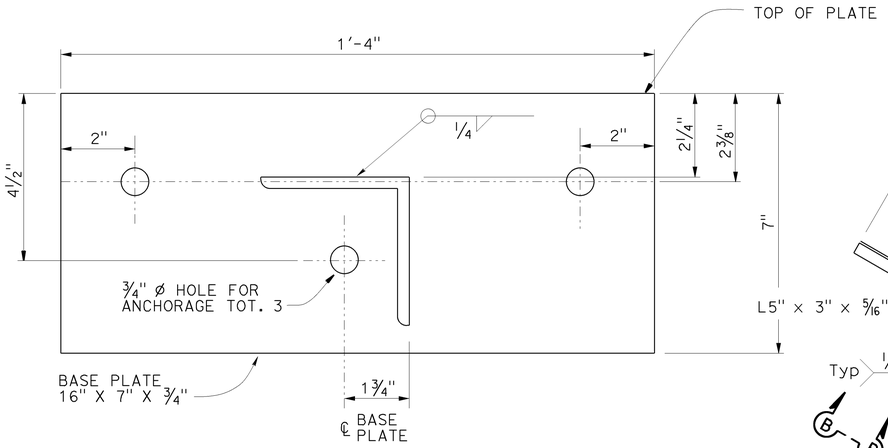

SECTION A-A

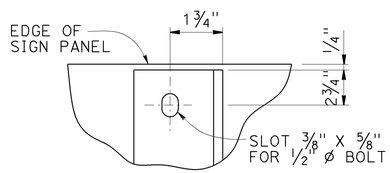

VIEW B-B

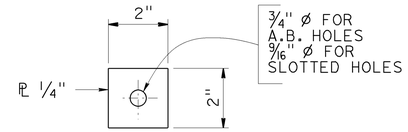

PLATE WASHERS DETAIL

USE PLATE WASHER OVER ALL SLOTTED HOLES END ANCHOR BOLT HOLES.

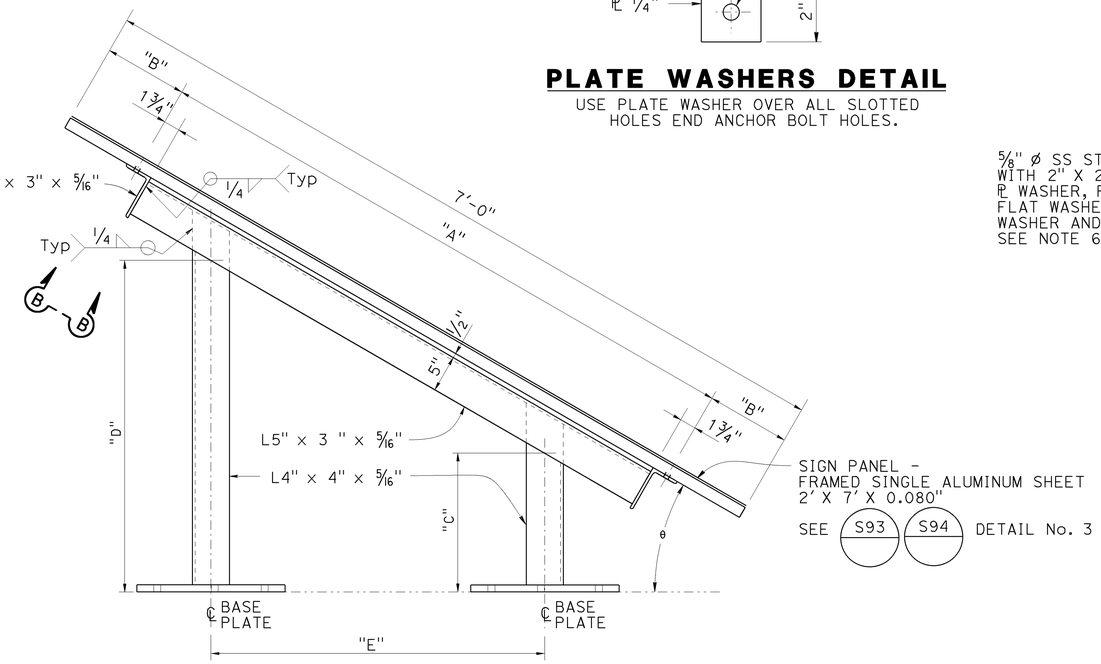

PLAN

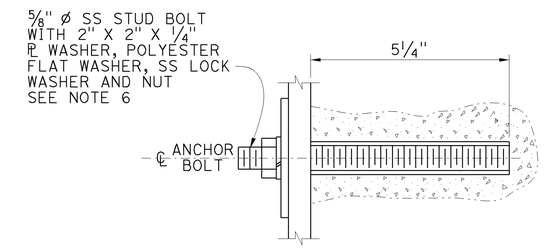

RESIN CAPSULE BOLT ANCHORAGE

NOTE: RESIN CAPSULE ANCHORAGE IS SUBJECT TO APPROVAL OF ENGINEER. INSTALLATION PROCEDURES SHALL COMPLY WITH MANUFACTURERS INSTRUCTIONS.

SIGN SKEW SEE NOTE 1	"A"	"B"	"C"	"D"	"E"
10 DEGREES	4'-6"	1'-3"	1'-0"	1'-6 3/8"	3'-0"

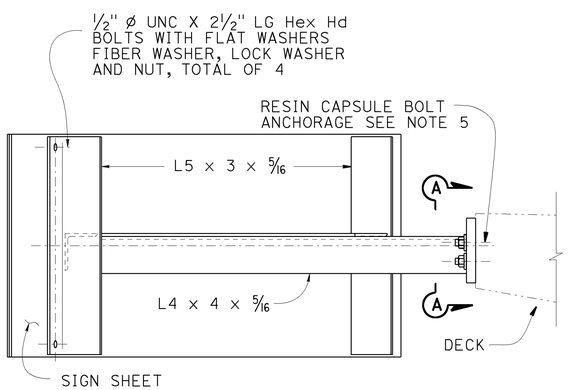

SIDE VIEW

NOTE:
THE CONTRACTOR SHALL VERIFY ALL CONTROLLING FIELD DIMENSIONS BEFORE ORDERING OR FABRICATING ANY MATERIAL.

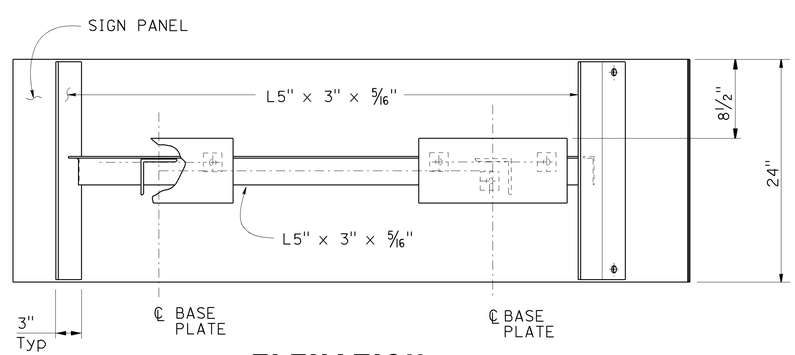

ELEVATION

LEGEND:

- - - - - - - - Indicates existing structure.
———————— Indicates new construction

NOTES:

1. Sign angle "e" shall be 10° less than bridge skew angle.
2. All steel must be galvanized after fabrication.
3. Sign panel orientation:
   The top of the sign panel shall be parallel to the bridge profile, if the profile is less than 4% slope. When projile exceeds 4%, construct the top of sign panel level.
4. Resin capsule anchorage is subject to Engineer approval. Installation procedure must comply with manufacturer instructions.
5. Resin capsule bolt anchors must be installed in sound concrete free of cracks and delaminating.
6. For anchorage use stainless steel ASTM F593 Alloy 316.

BRANCH CHIEF DAVID NEUMANN

	BY	CHECKED
DESIGN	T MARCHENKO	D VORA
DETAILS	H NGUYEN	T MARCHENKO
QUANTITIES	T MARCHENKO	X D VORA

STATE OF CALIFORNIA
DEPARTMENT OF TRANSPORTATION

DIVISION OF ENGINEERING SERVICES
STRUCTURE DESIGN
SPECIAL DESIGN BRANCH

BRIDGE NO. 25-0150
POST MILE 31.30

BRIDGE MOUNTED SIGNS - SKEWED
CONSTRUCTION DETAILS

SDS-2

STRUCTURES DESIGN SPECIAL DESIGN SHEET (ENGLISH) (REV. 09-01-10)

ORIGINAL SCALE IN INCHES FOR REDUCED PLANS 0 1 2 3

UNIT: 3619
PROJECT NUMBER & PHASE: 0300000072
CONTRACT NO.: 03-0F2201

DISREGARD PRINTS BEARING EARLIER REVISION DATES

REVISION DATES 4-23-13 — SHEET 2 OF 2

FILE => 03-0f2201b.dgn

USERNAME => s128478 DATE PLOTTED => 12-AUG-2013 TIME PLOTTED => 08:01

Dist	COUNTY	ROUTE	POST MILES TOTAL PROJECT	SHEET No.	TOTAL SHEETS
03	ED	50	R30.7/R31.7	55	119

REGISTERED CIVIL ENGINEER 8-19-13 DATE

8-19-13
PLANS APPROVAL DATE

REGISTERED PROFESSIONAL ENGINEER N. SELWAL No. 74816 Exp 12-31-13 CIVIL STATE OF CALIFORNIA

THE STATE OF CALIFORNIA OR ITS OFFICERS OR AGENTS SHALL NOT BE RESPONSIBLE FOR THE ACCURACY OR COMPLETENESS OF SCANNED COPIES OF THIS PLAN SHEET.

ROADSIDE SIGN QUANTITIES

SIGN NUMBER (SHT-NO.)	SIGN CODE FEDERAL	SIGN CODE CALIFORNIA	PANEL SIZE INCHES	"C" DIM IN FEET	POST SIZE AND LENGTH METAL POST 2½"x2½"	POST SIZE AND LENGTH 4" x 6"	ROADSIDE SIGN ONE POST EA	ROADSIDE SIGN TWO POST EA	INSTALL SIGN (SSBM) EA	REMOVE ROADSIDE SIGN EA	RELOCATE ROADSIDE SIGN EA	RESET ROADSIDE SIGN EA	REMARKS
2-1	W3-1									1			
2-2		G84-2(60)	54 x 48	7	12′		1						
2-3	W3-1		48 x 48	7	12′				1				SEE NOTE 4
3-1	W4-1R		48 x 48	7	14′		1						
3-2		G78	66 x 54	7		18′		1					
3-3	M3-4	G92 G26-2(50) G43	48 x 30 24 x 24 24 x 12 21 x 15	2	10′		1						
3-4		G77	84 x 66	5				1					
3-5	W12-2(15′-3")		36 x 36	7	14′		1						
3-6	R6-1R R6-1L		54 x 18 54 x 18	1.5	6′		1						BACK TO BACK
3-7	R5-1 R5-1a		36 x 36 36 x 24	4	10′		1						
3-8	R3-1		24 x 24	7	10′		1						
3-9		G17(4000)	36 x 18	7	10′		1						
3-10	R5-1 R5-1a		36 x 36 36 x 24	4	10′		1						
3-11	R6-1R R6-1L		54 x 18 54 x 18	1.5	6′		1						BACK TO BACK
3-12	R3-1		24 x 24	7	10′		1						
3-13	W12-2(15′-3")		36 x 36	7	14′		1						
3-14	M3-2	G92 G26-2(50) G43	48 x 30 24 x 24 24 x 12 21 x 15	2	10′		1						
3-15		G77	84 x 66	5				1					
3-16		G78	84 x 42	7		16′		1					
3-17		G78								1			
3-18		W12-2(15′-3")								1			
3-19	M3-4	G92 G26-2(50) G43								1			
3-20		G8-7								1			
3-21		"NO PARKING"										1	
3-22		"NO PARKING"										1	
SHEET TOTAL							13	4	1	5	0	2	

NOTES:

1. EXACT LOCATION AND POSITION OF ROADSIDE SIGNS TO BE DETERMINED BY THE ENGINEER.
2. POST LENGTHS GIVEN ARE APPROXIMATE.
3. "C" DIM = VERTICAL CLEARANCE EP TO BOTTOM OF SIGN PANEL.
4. SIGN PANEL TO BE MOUNTED ON ELECTROLIER.

REVISED BY | DATE REVISED
CHUCK COOK | NARAYAN SELWAL
CALCULATED-DESIGNED BY | CHECKED BY
FUNCTIONAL SUPERVISOR | SERGIO ACEVES
STATE OF CALIFORNIA - DEPARTMENT OF TRANSPORTATION
Caltrans
TRAFFIC

SIGN QUANTITIES

SQ-1

LAST REVISION 07-09-13 | DATE PLOTTED => 23-OCT-2013 | TIME PLOTTED => 10:12

Dist	COUNTY	ROUTE	POST MILES TOTAL PROJECT	SHEET No.	TOTAL SHEETS
03	ED	50	R30.7/R31.7	56	119

REGISTERED CIVIL ENGINEER 8-19-13 DATE

PLANS APPROVAL DATE 8-19-13

REGISTERED PROFESSIONAL ENGINEER N. SELWAL No. 74816 Exp 12-31-13 CIVIL STATE OF CALIFORNIA

THE STATE OF CALIFORNIA OR ITS OFFICERS OR AGENTS SHALL NOT BE RESPONSIBLE FOR THE ACCURACY OR COMPLETENESS OF SCANNED COPIES OF THIS PLAN SHEET.

ROADSIDE SIGN QUANTITIES (CONTINUED)

SIGN NUMBER (SHT-NO.)	SIGN CODE FEDERAL	SIGN CODE CALIFORNIA	PANEL SIZE INCHES	"C" DIM IN FEET	POST SIZE AND LENGTH METAL POST 2½"x2½"	POST SIZE AND LENGTH 4" x 6"	ROADSIDE SIGN ONE POST EA	ROADSIDE SIGN TWO POST EA	INSTALL SIGN (SSBM) EA	REMOVE ROADSIDE SIGN EA	RELOCATE ROADSIDE SIGN EA	RESET ROADSIDE SIGN EA	REMARKS
3-23	R6-1R R6-1L									1			
3-24	R5-1 R5-1a									1			
3-25	R3-1									1			
3-26	W12-2p(15'-3")									1			
3-27		G17(4000)								1			
3-28	R5-1 R5-1a									1			
3-29	R6-1R R6-1L									1			
3-30	W12-2p(15'-3")									1			
3-31	W12-2(15'-3")									1			
3-32	R3-1									1			
3-33		"NO PARKING"										1	
3-34		G8-7								1			
3-35	M3-2	G92 G26-2(50) G43								1			
3-36		G8-7								1			
4-1	R5-10a									1			
4-2	R5-10a		30 x 36	7	12'		1						
4-3	W3-1									1			
4-4	W3-1		48 x 48		14'		1						
4-5		G84-2(60)	54 x 48	7	12'		1						
4-6	W4-1R		48 x 48	7	14'		1						
4-7	R5-1 R5-1a									1			
4-8	R5-1 R5-1a		36 x 36 36 x 24	4	10'		1						
4-9		G49 G26-2(50)	30 x 15 30 x 30	5					1 1				SEE NOTE 4
SHEET TOTAL							5	0	2	16	0	1	
SHEET TOTAL FROM SQ-1							13	4	1	5	0	2	
SHEET TOTAL FROM THQ-2							0	0	0	0	3	0	
TOTAL							18	4	3	21	3	3	

SIGN QUANTITIES

SQ-2

STATE OF CALIFORNIA - DEPARTMENT OF TRANSPORTATION
Caltrans
TRAFFIC

FUNCTIONAL SUPERVISOR: SERGIO ACEVES
CALCULATED-DESIGNED BY: NARAYAN SELWAL
CHECKED BY: CHUCK COOK
REVISED BY
DATE REVISED

LAST REVISION 07-09-13
DATE PLOTTED => 23-OCT-2013
TIME PLOTTED => 10:12

Dist	COUNTY	ROUTE	POST MILES TOTAL PROJECT	SHEET No.	TOTAL SHEETS
03	ED	50	R30.7/R31.7	57	119

REGISTERED CIVIL ENGINEER 8-19-13 DATE

8-19-13
PLANS APPROVAL DATE

REGISTERED PROFESSIONAL ENGINEER N. SELWAL No. 74816 Exp 12-31-13 CIVIL STATE OF CALIFORNIA

THE STATE OF CALIFORNIA OR ITS OFFICERS OR AGENTS SHALL NOT BE RESPONSIBLE FOR THE ACCURACY OR COMPLETENESS OF SCANNED COPIES OF THIS PLAN SHEET.

SIGN PANEL QUANTITIES

SIGN CODE FEDERAL	SIGN CODE CALIFORNIA	SIGN MESSAGE/DESCRIPTION	PANEL SIZE L x D INCHES	PANEL AREA SQFT	NUMBER OF PANELS	BACKGROUND SHEETING COLOR	BACKGROUND RETROREFLECTIVE ASTM TYPE	LEGEND SHEETING COLOR	LEGEND RETROREFLECTIVE ASTM TYPE	PROTECTIVE-FILM OVERLAY PREMIUM	FURNISH SINGLE SHEET ALUMINUM SIGN UNFRAMED 0.063" SQFT	UNFRAMED 0.080" SQFT	FRAMED 0.063" SQFT	FRAMED 0.080" SQFT
W3-1		STOP AHEAD (SYMBOL)	48 x 48	16.00	2	YELLOW	IX	BLACK RED,WHITE	 IX	X		32.00		
W4-1R		MERGE (SYMBOL)	48 x 48	16.00	2	YELLOW	IX	BLACK		X		32.00		
W12-2(15'-3")		LOW CLEARANCE SIGN	36 x 36	9.00	2	YELLOW	III	BLACK		X	18.00			
W12-2p(15'-3")		VERTICAL CLEARANCE PLATE	84 x 24	14.00	2	YELLOW	III	BLACK		X				28.00
R3-1		NO RIGHT TURN (SYMBOL)	24 x 24	4.00	2	WHITE	IX	BLACK RED	 IX	X	8.00			
R5-1		DO NOT ENTER	36 x 36	9.00	3	RED	IX	WHITE	IX	X	27.00			
R5-1a		WRONG WAY	36 x 24	6.00	3	RED	IX	WHITE	IX	X	18.00			
R5-10a		NO PEDESTRIANS BICYCLES MOTOR-DRIVEN CYCLES	30 x 36	7.50	1	WHITE	IX	BLACK		X	7.50			
R6-1L		ONE WAY (ARROW)	54 x 18	6.75	2	WHITE	III	BLACK		X		13.50		
R6-1R		ONE WAY (ARROW)	54 x 18	6.75	2	WHITE	III	BLACK		X		13.50		
	G17(4000)	ELEVATION 4000 FT	36 x 18	4.50	1	GREEN	III	WHITE	III	X	4.50			
	G26-2(50)	US 50 (ROUTE MARKER)	24 x 24	4.00	2	WHITE	III	BLACK		X	8.00			
	G26-2(50)	US 50 (ROUTE MARKER)	30 x 30	6.25	1	WHITE	III	BLACK		X	6.25			
	G43	DIRECTIONAL ARROW	21 x 15	2.19	2	WHITE	III	BLACK		X	4.38			
	G49	NORTH	30 x 15	3.13	1	WHITE	III	BLACK		X	3.13			
	G84-2(60)	EXIT (60) WITH ARROW	54 x 48	18.00	2	GREEN	III	WHITE	III	X		36.00		
	G78	SIGN 3-2, SEE SHEET SD-2	66 x 54	24.75	1	GREEN	III	WHITE	IX	X			24.75	
	G78	SIGN 3-4, SEE SHEET SD-2	84 x 66	38.50	1	GREEN	III	WHITE	IX	X				38.50
	G78	SIGN 3-17, SEE SHEET SD-2	84 x 66	38.50	1	GREEN	III	WHITE	IX	X				38.50
	G78	SIGN 3-18, SEE SHEET SD-2	84 x 42	24.50	1	GREEN	III	WHITE	IX	X				24.50
	G92	FREEWAY ENTRANCE	48 x 30	10.00	2	GREEN	IX	WHITE	IX	X		20.00		
	M3-2	EAST	24 x 12	2.00	1	WHITE	III	BLACK		X	2.00			
	M3-4	WEST	24 x 12	2.00	1	WHITE	III	BLACK		X	2.00			
TOTAL											108.76	147.00	24.75	129.50

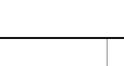

L = LENGTH OF PANEL
D = DEPTH OF PANEL

NOTE:
FOR G26-1<CA> SHIELDS, USE RETROREFLECTIVE ASTM TYPE III WHITE SHEETING FOR BACKGROUND.

SIGN QUANTITIES

SQ-3

STATE OF CALIFORNIA - DEPARTMENT OF TRANSPORTATION
Caltrans
TRAFFIC

FUNCTIONAL SUPERVISOR: SERGIO ACEVES
CALCULATED-DESIGNED BY: NARAYAN SELWAL
CHECKED BY: CHUCK COOK
REVISED BY
DATE REVISED

LAST REVISION 07-09-13
DATE PLOTTED => 23-OCT-2013
TIME PLOTTED => 10:12

Dist	COUNTY	ROUTE	POST MILES TOTAL PROJECT	SHEET No.	TOTAL SHEETS
03	ED	50	R30.7/R31.7	58	119

REGISTERED CIVIL ENGINEER 8-19-13 DATE

PLANS APPROVAL DATE 8-19-13

REGISTERED PROFESSIONAL ENGINEER N. SELWAL No. 74816 Exp. 12-31-13 CIVIL STATE OF CALIFORNIA

THE STATE OF CALIFORNIA OR ITS OFFICERS OR AGENTS SHALL NOT BE RESPONSIBLE FOR THE ACCURACY OR COMPLETENESS OF SCANNED COPIES OF THIS PLAN SHEET.

(N)- NOT A SEPARATE PAY ITEM, FOR INFORMATION ONLY.

ROADWAY ITEMS

LOCATION	ROADWAY EXCAVATION *	(N) EMBANKMENT *	** COLD PLANE ASPHALT CONCRETE PAVEMENT	CLASS 2 AGRGREGATE BASE	HOT MIX ASPHALT (TYPE A)	TACK COAT	PLACE HMA (Misc AREA)	DESCRIPTION
	CY	CY	SQYD	CY	TON	TON	SQYD	
"A1" 114+00.00 TO 140+93.00	-	-	15,142	-	1009.46	6.94		COLD PLANE AC Pvmt & OVERLAY
"A1" 140+93.00 TO 144+75.90	63	429	2458	16	281.95	1.13		COLD PLANE AC Pvmt, OVERLAY & SHOULDER WIDENING
"A1" 144+75.90 TO 167+35.30	-	-	12,903	-	860.19	5.91		COLD PLANE AC Pvmt & OVERLAY
"S1" 13+15.00 TO 17+04.00	1403	12	2152	199	254.23	1.00	390	HMA-A DITCHES
RAMP "R1", "R2", "R3" & "R4"			9820	-	654.67	4.50		COLD PLANE AC Pvmt & OVERLAY
DIKE TABLE					9.52			
STAGE CONSTRUCTION QUANTITIES			4101		273.29	1.88		MEDIAN CROSS OVER
SUBTOTAL	1466	441	46,576	215	3343.31	21.36	390	
TOTAL	1466	-	46,576	215	3343.31	21.36	390	

* SHRINKAGE AND SWELLING FACTORS ARE NOT INCLUDED.

** INCLEDES COLD PLANE AC Pvmt AT GORE AREAS.

REMOVE CRASH CUSHION (SAND FILLED)

LOCATION	EA	REMARKS
"A1" 155+10.00	14	ARRAY U14
TOTAL	14	

CONCRETE BARRIER

STATION	Conc BARRIER (TYPE 60)	REMARKS
	LF	
"A" 132+00.00 TO 132+15.00	15.00	Conc BARRIER TRANSITION
"A" 132+15.00 TO 142+08.63	993.63	
"A" 143+41.88 TO 155+08.20	1166.32	
TOTAL	2174.95	

CRASH CUSHION MODULE, SAND FILLED

LOCATION	EA	REMARKS
" A1" 155+10.00	14	ARRAY U14
TOTAL	14	

CONCRETE CURBS, CURB RAMPS AND SIDEWALKS

LOCATION	MINOR CONCRETE (CURB AND GUTTER)	MINOR CONCRETE (SIDEWALK AND CURB RAMP)	(N) CLASS 2 AB	* PRE/POST CONSTRUCTION SURVEYS
	CY	CY	CY	EA
"S1" 13+64.54 TO 16+13.13, Rt	18.20	18.24	34.00	2
"S1" 14+10.75 TO 16+51.10, Lt	17.12	17.11	32.00	0
TOTAL	35.32	35.35	-	2

NOTES:

QUANTITY FOR CL 2 AB UNDER Conc CURB AND SIDEWALK IS INCLUDED IN "S1" QUANTITIES IN " ROADWAY ITEMS" TABLE.

* SEE CONSTRUCTION DETAILS.

DIKE

LOCATION	PLACE HMA DIKE (TYPE C)	PLACE HMA DIKE (TYPE E)	PLACE HMA DIKE (TYPE F)	** HOT MIX ASPHALT (TYPE A)
	LF	LF	LF	TON
"A1"140+93.00 TO 141+99.56, Rt	106.56	-	-	0.81
"A1"141+99.56 TO 142+24.56, Rt	-	-	25.00	0.33
"A1"143+57.81 TO 144+75.90, Rt	-	118.10	-	3.07
"A1"140+93.00 TO 141+92.70, Lt	-	99.70	-	2.59
"A1"143+25.95 TO 143+50.95, Lt	-	-	25.00	0.33
"A1"143+50.95 TO 144+25.94, Lt	75.00			0.57
"A1"144+25.94 TO 144+95.90, Lt		69.96		1.82
SUBTOTAL	181.56	287.76	50.00	9.52
TOTAL	181.56	287.76	50.00	-

** SEE "ROADWAY ITEMS" TABLE FOR TOTAL QUANTITY.

REMOVE JUCNTION BOX

LOCATION	EA
" A1" 142+04.00, Lt 46.00	1
TOTAL	1

REMOVE CONCRETE BARRIER

LOCATION	LENGTH (LF)
"A1" 132+00 TO 155+08.20	2308.20
TOTAL	2308.20

SUMMARY OF QUANTITIES

Q-1

REVISED BY | DATE REVISED

WESLEY LEE | NARAYAN SELWAL

CALCULATED-DESIGNED BY | CHECKED BY

FUNCTIONAL SUPERVISOR: NESAR FORMOLI

STATE OF CALIFORNIA - DEPARTMENT OF TRANSPORTATION

Caltrans®

NORTH REGION DIVISION OF ENGINEERING

LAST REVISION 00-00-00 | DATE PLOTTED => 23-OCT-2013 TIME PLOTTED => 10:13

Dist	COUNTY	ROUTE	POST MILES TOTAL PROJECT	SHEET No.	TOTAL SHEETS
03	ED	50	R30.7/R31.7	59	119

REGISTERED CIVIL ENGINEER 8-19-13 DATE

8-19-13
PLANS APPROVAL DATE

REGISTERED PROFESSIONAL ENGINEER
N. SELWAL
No. 74816
Exp. 12-31-13
CIVIL
STATE OF CALIFORNIA

THE STATE OF CALIFORNIA OR ITS OFFICERS OR AGENTS SHALL NOT BE RESPONSIBLE FOR THE ACCURACY OR COMPLETENESS OF SCANNED COPIES OF THIS PLAN SHEET.

SHOULDER RUMBLE STRIP
(HMA, GROUND-IN INDENTATIONS)

LOCATION	DIRECTION	SHOULDER (L+)	SHOULDER (R+)
		STA	STA
"A1" 128+00.00 TO 142+08.63	EB	-	15
"A1" 143+41.88 TO 153+45.00	EB	-	11
"A1" 137+15.00 TO 142+24.56	EB	6	-
"A1" 142+57.81 TO 153+45.00	EB	11	-
"A1" 130+22.00 TO 142+08.63	WB	-	12
"A1" 143+41.88 TO 155+60.00	WB	-	13
"A1" 137+27.00 TO 141+92.70	WB	5	-
"A1" 143+25.95 TO 151+10.30	WB	8	-
SUBTOTAL		30	51
TOTAL		81	

MIDWEST GUARDRAIL SYSTEM

LOCATION	TRANSITION RAILING (TYPE WB-31)	ALTERNATIVE IN-LINE TERMINAL SYSTEM	(N) LAYOUT TYPE	REMOVE GUARDRAIL	VEGETATION CONTROL (MINOR CONCRETE)
	EA	EA		LF	SQYD
"A1" 141+49.56 TO 142+24.56, R+	1	1	12A	75.00	25
"A1" 143+25.94 TO 144+00.94, L+	1	1	12A	75.00	25
TOTAL	2	2	-	150.00	50

(N)- NOT A SEPARATE PAY ITEM, FOR INFORMATION ONLY.

TEMPORARY FIBER ROLL

LOCATION	LF
"A1" 141+25 TO 142+15.93, R+	91
"A1" 144+02 TO 144+75.90, R+	74
"A1" 143+63.34 TO 144+35.00, L+	72
"S1" 13+61.50 TO 14+30.00, R+	69
"S1" 14+30.00 TO 14+60.00, R+	60
"S1" 15+50.00 TO 15+75.00, R+	50
"S1" 15+75.00 TO 16+51.00, R+ & L+	152
TOTAL	568

TEMPORARY DRAINAGE INLET PROTECTION

LOCATION	EA
"S1" 13+86.77 R+	1
"S1" 14+26.45 R+	1
"S1" 15+97.12 L+	1
"S1" 15+97.25 L+	1
"S1" 16+34.76 L+	1
"S1" 16+35.92 L+	1
TOTAL	6

TEMPORARY SILT FENCE

LOCATION	LF
"A1" 141+25 TO 142+15.93, R+	91
"A1" 144+02 TO 144+75.90, R+	74
"A1" 143+63.34 TO 144+35.00, L+	72
"S1" 13+61.50 TO 14+60.00, R+	99
"S1" 15+50 TO 16+51.00, R+	101
"S1" 14+43.17 TO 14+60.00, L+	17
"S1" 15+75.00 TO 16+51.00, L+	76
TOTAL	530

DETECTABLE WARNING SURFACE

LOCATION	SQFT	COMMENTS
"S1" LINE RIGHT	72	
"S1" LINE LEFT	72	
TOTAL	144	

SUMMARY OF QUANTITIES

Q-2

STATE OF CALIFORNIA - DEPARTMENT OF TRANSPORTATION
Caltrans
NORTH REGION
DIVISION OF ENGINEERING

FUNCTIONAL SUPERVISOR: NESAR FORMOLI
CALCULATED-DESIGNED BY: WESLEY LEE
CHECKED BY: NARAYAN SELWAL
REVISED BY
DATE REVISED

LAST REVISION 00-00-00
DATE PLOTTED => 23-OCT-2013
TIME PLOTTED => 10:13

Dist	COUNTY	ROUTE	POST MILES TOTAL PROJECT	SHEET No.	TOTAL SHEETS
03	ED	50	R30.7/R31.7	60	119

LICENSED LANDSCAPE ARCHITECT

8-19-13
PLANS APPROVAL DATE

LICENSED LANDSCAPE ARCHITECT
LESLEY E. PHILLIPS
No. 5066
Signature
03-31-14
Renewal date
7-23-13
Date
STATE OF CALIFORNIA

THE STATE OF CALIFORNIA OR ITS OFFICERS OR AGENTS SHALL NOT BE RESPONSIBLE FOR THE ACCURACY OR COMPLETENESS OF SCANNED COPIES OF THIS PLAN SHEET.

EROSION CONTROL QUANTITIES

LOCATION	RECP (NETTING)	EROSION CONTROL (BONDED FIBER MATRIX)	FIBER ROLLS
	SQFT	SQFT	LF
A	1780	1780	200
B	1900	1900	260
C	1430	1430	140
D	1960	1960	200
TOTAL	7070	7070	800

LEGENDS:

C + F — CUT/FILL LINE

EROSION CONTROL
RECP(NETTING)
EROSION CONTROL (BONDED FIBER MATRIX)

FR — FIBER ROLLS

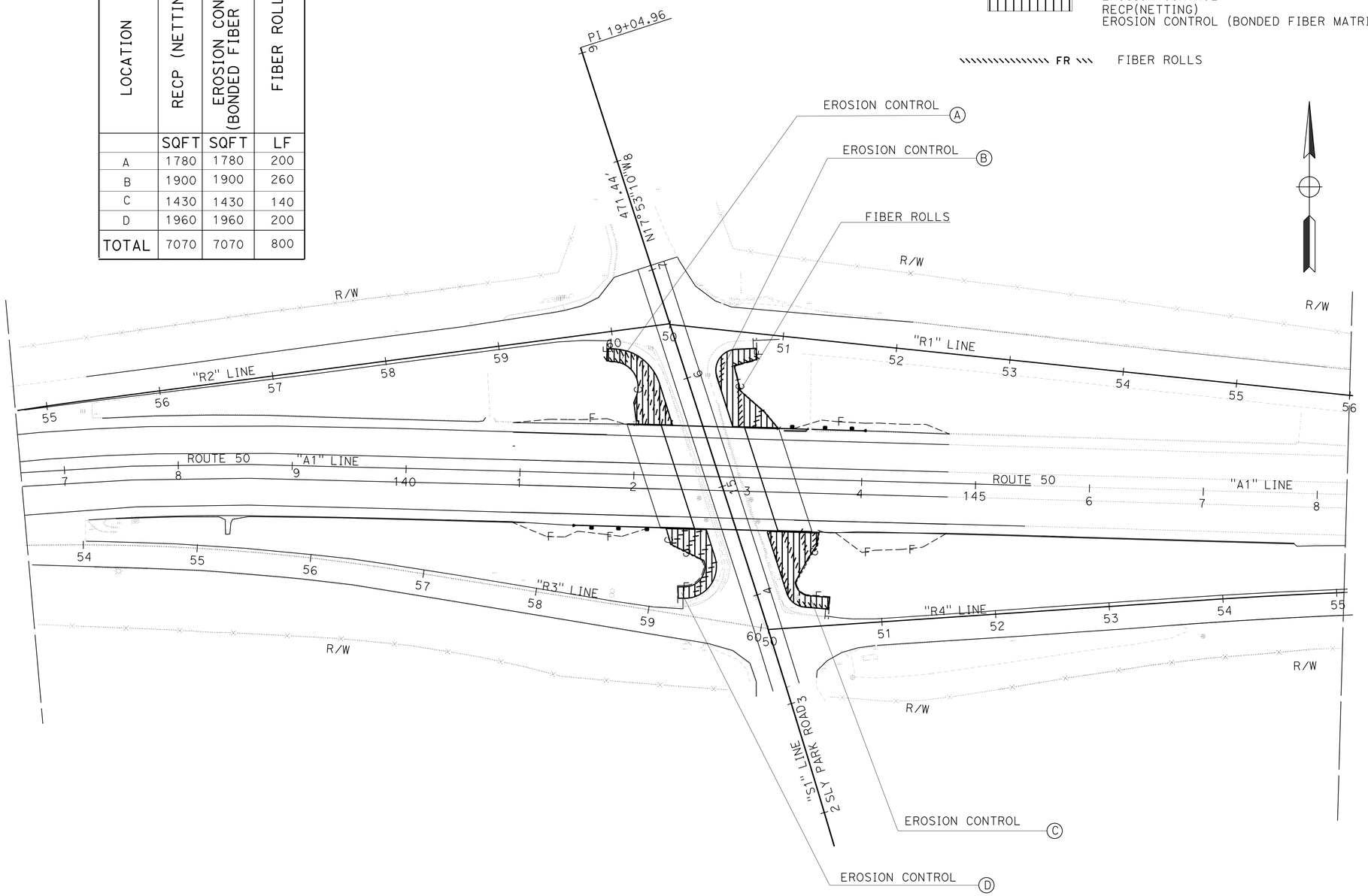

APPROVED FOR EROSION CONTROL WORK ONLY

EROSION CONTROL PLANS AND QUANTITIES

SCALE: 1"=50'

EC-1

STATE OF CALIFORNIA - DEPARTMENT OF TRANSPORTATION
Caltrans® LANDSCAPE ARCHITECTURE

SENIOR LANDSCAPE ARCHITECT: T CHRIS JOHNSON

CALCULATED-DESIGNED BY: LESLEY E. PHILLIPS
CHECKED BY: WESLEY LEE

REVISED BY
DATE REVISED

LAST REVISION 00-00-00
DATE PLOTTED => 23-OCT-2013
TIME PLOTTED => 10:13

Dist	COUNTY	ROUTE	POST MILES TOTAL PROJECT	SHEET No.	TOTAL SHEETS
03	ED	50	R30.7/R31.7	61	119

H. Golban 8-19-13
REGISTERED ELECTRICAL ENGINEER DATE

8-19-13
PLANS APPROVAL DATE

REGISTERED PROFESSIONAL ENGINEER H. Golban No. E 17928 Exp. 9/30/14 ELECTRICAL STATE OF CALIFORNIA

THE STATE OF CALIFORNIA OR ITS OFFICERS OR AGENTS SHALL NOT BE RESPONSIBLE FOR THE ACCURACY OR COMPLETENESS OF SCANNED COPIES OF THIS PLAN SHEET.

NOTE:

FOR ACCURATE RIGHT OF WAY DATA, CONTACT
RIGHT OF WAY ENGINEERING AT THE DISTRICT OFFICE.

LEGEND (THIS SHEET ONLY):

1. Exist TYPE R CONTROLLER CABINET
2. Exist TYPE III-AF SERVICE EQUIPMENT ENCLOSURE Ctid No. 0325050R031301
3. 2#8, 4 DLC
4. 8 DLC

ABBREVATIONS:

CS - COUNT STATION
PG&E - PACIFIC GAS AND ELECTRIC

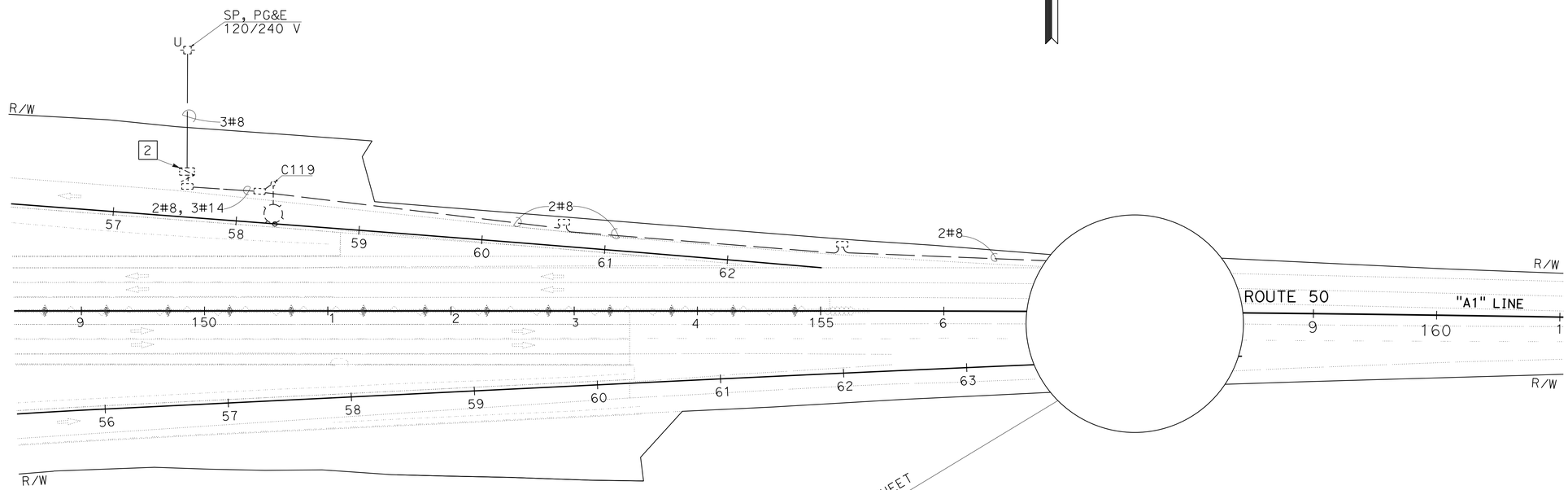

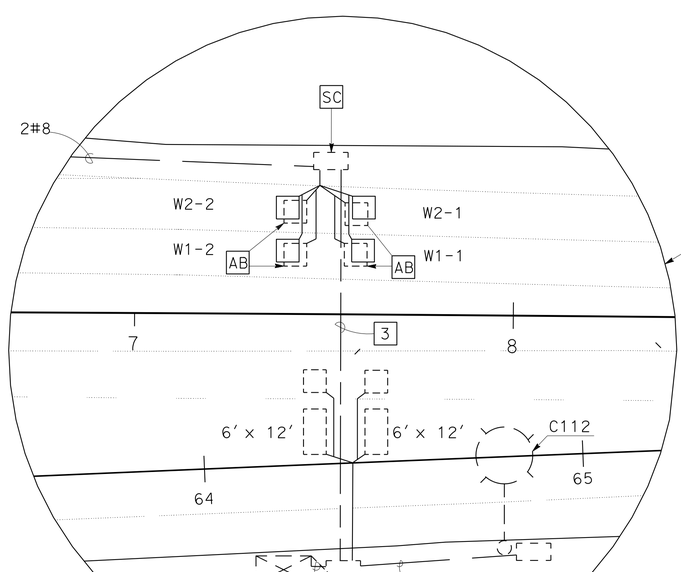

DETAIL 'A'

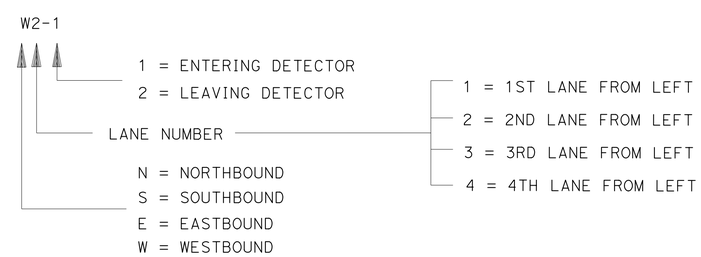

FREEWAY DETECTOR IDENTIFICATION

MODIFY TRAFFIC MONITORING STATION (COUNT)

SCALE: 1" = 50'

APPROVED FOR ELECTRICAL WORK ONLY

E-1

STATE OF CALIFORNIA - DEPARTMENT OF TRANSPORTATION
Caltrans
ELECTRICAL DESIGN

FUNCTIONAL SUPERVISOR: NELSON LEE

CALCULATED-DESIGNED BY: OANH D NGUYEN
CHECKED BY: HABIB GOLBAN

REVISED BY | DATE REVISED

LAST REVISION 09-17-13 | DATE PLOTTED => 23-OCT-2013 | TIME PLOTTED => 10:13

Dist	COUNTY	ROUTE	POST MILES TOTAL PROJECT	SHEET No.	TOTAL SHEETS
03	ED	50	R30.7/R31.7	62	119

H. Golban 8-19-13
REGISTERED ELECTRICAL ENGINEER DATE

8-19-13
PLANS APPROVAL DATE

REGISTERED PROFESSIONAL ENGINEER
HABIB GOLBAN
No. E17928
Exp. 09-30-14
ELECTRICAL
STATE OF CALIFORNIA

THE STATE OF CALIFORNIA OR ITS OFFICERS OR AGENTS SHALL NOT BE RESPONSIBLE FOR THE ACCURACY OR COMPLETENESS OF SCANNED COPIES OF THIS PLAN SHEET.

MODIFY TRAFFIC MONITORING STATION (COUNT)

SHEET No.	(N) SC LOOP WIRES TO DLC	(N) TYPE A LOOP
	EA	EA
E-1	1	4

(N) - NOT A SEPARATE PAY ITEM, FOR INFORMATION ONLY

ELECTRICAL QUANTITIES

E-2

STATE OF CALIFORNIA - DEPARTMENT OF TRANSPORTATION
Caltrans® ELECTRICAL DEIGN

FUNCTIONAL SUPERVISOR: NELSON LEE
CALCULATED-DESIGNED BY: OANH D NGUYEN
CHECKED BY: HABIB GOLBAN
REVISED BY
DATE REVISED

LAST REVISION 08-19-13
DATE PLOTTED => 23-OCT-2013
TIME PLOTTED => 10:13

M

Maint	MAINTENANCE
Max	MAXIMUM
MB	METAL BEAM
MBB	METAL BEAM BARRIER
MBGR	METAL BEAM GUARD RAILING
Med	MEDIAN
MGS	MIDWEST GUARDRAIL SYSTEM
MH	MANHOLE
Min	MINIMUM
Misc	MISCELLANEOUS
Misc I & S	MISCELLANEOUS IRON AND STEEL
Mkr	MARKER
Mod	MODIFIED,
	MODIFY
Mon	MONUMENT
MP	METAL PLATE
MPGR	METAL PLATE GUARD RAILING
MR	MOVEMENT RATING
MSE	MECHANICALLY STABILIZED EMBANKMENT
Mt	MOUNTAIN, MOUNT
Mtl	MATERIAL
MVP	MAINTENANCE VEHICLE PULLOUT

N

N	NORTH
NB	NORTHBOUND
No.	NUMBER (MUST HAVE PERIOD)
Nos.	NUMBERS (MUST HAVE PERIOD)
NPS	NOMINAL PIPE SIZE
NS	NEAR SIDE
NSP	NEW STANDARD PLAN
NTS	NOT TO SCALE

O

Oblr	OBLITERATE
OC	OVERCROSSING
OD	OUTSIDE DIAMETER
OF	OUTSIDE FACE
OG	ORIGINAL GROUND
OGAC	OPEN GRADED ASPHALT CONCRETE
OGFC	OPEN GRADED FRICTION COURSE
OH	OVERHEAD
OHWM	ORDINARY HIGH WATER MARK
O-O	OUT TO OUT
Opp	OPPOSITE
OSD	OVERSIDE DRAIN

P

P	PAGE
PAP	PERFORATED ALUMINUM PIPE
PB	PULL BOX
PC	POINT OF CURVATURE,
	PRECAST
PCC	POINT OF COMPOUND CURVE,
	PORTLAND CEMENT CONCRETE
PCMS	PORTABLE CHANGEABLE MESSAGE SIGN
PCP	PERFORATED CONCRETE PIPE,
	PRESTRESSED CONCRETE PIPE
PCVC	POINT OF COMPOUND VERTICAL CURVE
PEC	PERMIT TO ENTER AND CONSTRUCT
Ped	PEDESTRIAN
Ped OC	PEDESTRIAN OVERCROSSING
Ped UC	PEDESTRIAN UNDERCROSSING
Perm Mtl	PERMEABLE MATERIAL

P continued

PG	PROFILE GRADE
PI	POINT OF INTERSECTION
PJP	PARTIAL JOINT PENETRATION
Pkwy	PARKWAY
ℙ,PL	PLATE
P/L	PROPERTY LINE
PM	POST MILE,
	TIME FROM NOON TO MIDNIGHT
PN	PAVING NOTCH
POC	POINT OF HORIZONTAL CURVE
POT	POINT OF TANGENT
POVC	POINT OF VERTICAL CURVE
PP	PIPE PILE,
	PLASTIC PIPE,
	POWER POLE
PPL	PREFORMED PERMEABLE LINER
PPP	PERFORATED PLASTIC PIPE
PRC	POINT OF REVERSE CURVE
PRF	PAVEMENT REINFORCING FABRIC
PRVC	POINT OF REVERSE VERTICAL CURVE
PS&E	PLANS, SPECIFICATIONS AND ESTIMATES
PS, P/S	PRESTRESSED
PSP	PERFORATED STEEL PIPE
PT	POINT OF TANGENCY
PVC	POLYVINYL CHLORIDE
Pvmt	PAVEMENT

Q

Qty	QUANTITY

R

R	RADIUS
R & D	REMOVE AND DISPOSE
R & S	REMOVE AND SALVAGE
R/C	RATE OF CHANGE
RCA	REINFORCED CONCRETE ARCH
RCB	REINFORCED CONCRETE BOX
RCP	REINFORCED CONCRETE PIPE
RCPA	REINFORCED CONCRETE PIPE ARCH
Rd	ROAD
Reinf	REINFORCED,
	REINFORCEMENT,
	REINFORCING
Rel	RELOCATE
Repl	REPLACEMENT
Ret	RETAINING
Rev	REVISED, REVISION
Rdwy	ROADWAY
RHMA	RUBBERIZED HOT MIX ASPHALT
Riv	RIVER
RM	ROAD-MIXED
RP	RADIUS POINT,
	REFERENCE POINT
RR	RAILROAD
RSP	ROCK SLOPE PROTECTION,
	REVISED STANDARD PLAN
Rt	RIGHT
Rte	ROUTE
RW	REDWOOD,
	RETAINING WALL
R/W	RIGHT OF WAY
Rwy	RAILWAY

S

S	SOUTH,
	SUPPLEMENT
SAE	STRUCTURE APPROACH EMBANKMENT
Salv	SALVAGE
SAPP	STRUCTURAL ALUMINUM PLATE PIPE
SB	SOUTHBOUND
SC	SAND CUSHION
SCSP	SLOTTED CORRUGATED STEEL PIPE
SD	STORM DRAIN
Sec	SECOND,
	SECTION
Sep	SEPARATION
SG	SUBGRADE
Shld	SHOULDER
Sht	SHEET
Sim	SIMILAR
₤	STATION LINE
SM	SELECTED MATERIAL
Spec	SPECIAL,
	SPECIFICATIONS
SPP	SLOTTED PLASTIC PIPE
SS	SLOPE STAKE
SSBM	STRAP AND SADDLE BRACKET METHOD
SSD	STRUCTURAL SECTION DRAIN
SSPA	STRUCTURAL STEEL PLATE ARCH
SSPP	STRUCTURAL STEEL PLATE PIPE
SSPPA	STRUCTURAL STEEL PLATE PIPE ARCH
SSRP	STEEL SPIRAL RIB PIPE
St	STREET
Sta	STATION
STBB	SINGLE THRIE BEAM BARRIER
Std	STANDARD
Str	STRUCTURE
Surf	SURFACING
SW	SIDEWALK,
	SOUND WALL
Swr	SEWER
Sym	SYMMETRICAL
S4S	SURFACE 4 SIDES

T

T	SEMI-TANGENT
Tan	TANGENT
TBB	THRIE BEAM BARRIER
Tbr	TIMBER
TC	TOP OF CURB
TCB	TRAFFIC CONTROL BOX
TCE	TEMPORARY CONSTRUCTION EASEMENT
Tel	TELEPHONE
Temp	TEMPORARY
TG	TOP OF GRADE
Tot	TOTAL
TP	TELEPHONE POLE
TPB	TREATED PERMEABLE BASE
TPM	TREATED PERMEABLE MATERIAL
Trans	TRANSITION

T continued

TS	TRANSVERSE,
	TRAFFIC SIGNAL,
	TUBULAR STEEL
Typ	TYPICAL

U

UC	UNDERCROSSING
UD	UNDERDRAIN
UG	UNDERGROUND
UON	UNLESS OTHERWISE NOTED
UP	UNDERPASS

V

V	VALVE,
	DESIGN SPEED
Var	VARIABLE,
	VARIES
VC	VERTICAL CURVE
VCP	VITRIFIED CLAY PIPE
Vert	VERTICAL
Via	VIADUCT
Vol	VOLUME

W

W	WEST,
	WIDTH
WB	WESTBOUND
WH	WEEP HOLE
WM	WIRE MESH
WS	WATER SURFACE
WSP	WELDED STEEL PIPE
Wt	WEIGHT
WV	WATER VALVE
WW	WINGWALL
WWLOL	WINGWALL LAYOUT LINE

X

X Sec	CROSS SECTION
Xing	CROSSING

Y

Yr	YEAR
Yrs	YEARS

Dist	COUNTY	ROUTE	POST MILES TOTAL PROJECT	SHEET No.	TOTAL SHEETS
03	ED	50	R30.7/R31.7	63	119

Grace M. Tsushima
REGISTERED CIVIL ENGINEER

July 19, 2013
PLANS APPROVAL DATE

REGISTERED PROFESSIONAL ENGINEER Grace M. Tsushima No. C49814 Exp. 9-30-14 CIVIL STATE OF CALIFORNIA

THE STATE OF CALIFORNIA OR ITS OFFICERS OR AGENTS SHALL NOT BE RESPONSIBLE FOR THE ACCURACY OR COMPLETENESS OF SCANNED COPIES OF THIS PLAN SHEET.

TO ACCOMPANY PLANS DATED 8-19-13

UNIT OF MEASUREMENT SYMBOLS:

Some of the symbols used in the project plan quantity tables and in the Bid Item List are:

TABLE A

SYMBOL USED	DEFINITIONS
ACRE	ACRE
CF	CUBIC FOOT
CY	CUBIC YARD
EA	EACH
GAL	GALLON
LB	POUND
LF	LINEAR FOOT
SQFT	SQUARE FOOT
SQYD	SQUARE YARD
STA	100 FEET
TAB	TABLET
TON	2,000 POUNDS

Some of the symbols used in the plans other than in the project plan quantity tables are:

TABLE B

SYMBOL USED	DEFINITIONS
ksi	KIPS PER SQUARE INCH
ksf	KIPS PER SQUARE FOOT
psi	POUNDS PER SQUARE INCH
psf	POUNDS PER SQUARE FOOT
lb/ft^3, pcf	POUNDS PER CUBIC FOOT
tsf	TONS PER SQUARE FOOT
mph, MPH *	MILES PER HOUR
ø	NOMINAL DIAMETER
oz	OUNCE
lb	POUND
kip	1,000 POUNDS
cal	CALORIE
ft	FOOT OR FEET
gal	GALLON

* For use on a sign panel only

STATE OF CALIFORNIA
DEPARTMENT OF TRANSPORTATION

ABBREVIATIONS (SHEET 2 OF 2)

NO SCALE

RSP A10B DATED JULY 19, 2013 SUPERSEDES STANDARD PLAN A10B DATED MAY 20, 2011 - PAGE 2 OF THE STANDARD PLANS BOOK DATED 2010.

REVISED STANDARD PLAN RSP A10B

2010 REVISED STANDARD PLAN RSP A10B

6-7-13

Dist	COUNTY	ROUTE	POST MILES TOTAL PROJECT	SHEET No.	TOTAL SHEETS
03	ED	50	R30.7/R31.7	64	119

REGISTERED CIVIL ENGINEER

July 19, 2013
PLANS APPROVAL DATE

REGISTERED PROFESSIONAL ENGINEER Roberta L. McLaughlin No. C40375 Exp. 3-31-15 CIVIL STATE OF CALIFORNIA

THE STATE OF CALIFORNIA OR ITS OFFICERS OR AGENTS SHALL NOT BE RESPONSIBLE FOR THE ACCURACY OR COMPLETENESS OF SCANNED COPIES OF THIS PLAN SHEET.

TO ACCOMPANY PLANS DATED 8-19-13

EXIT RAMP NEUTRAL AREA (GORE) TREATMENT

DETAIL 36

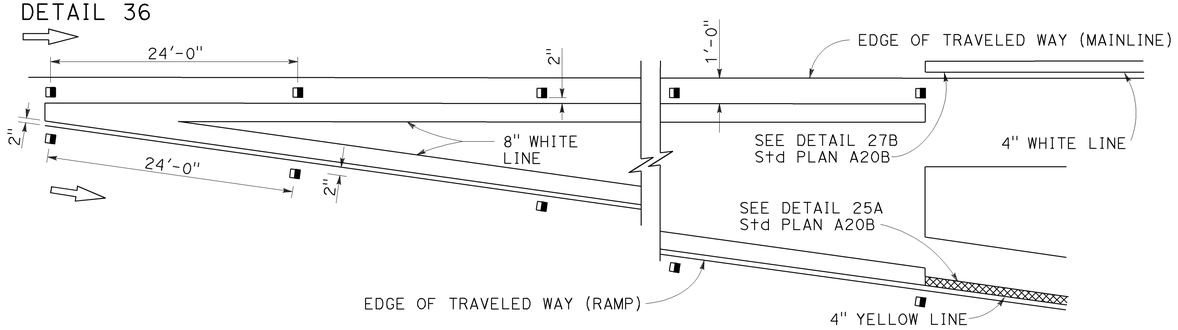

ENTRANCE RAMP NEUTRAL AREA (MERGE) TREATMENT

DETAIL 36A

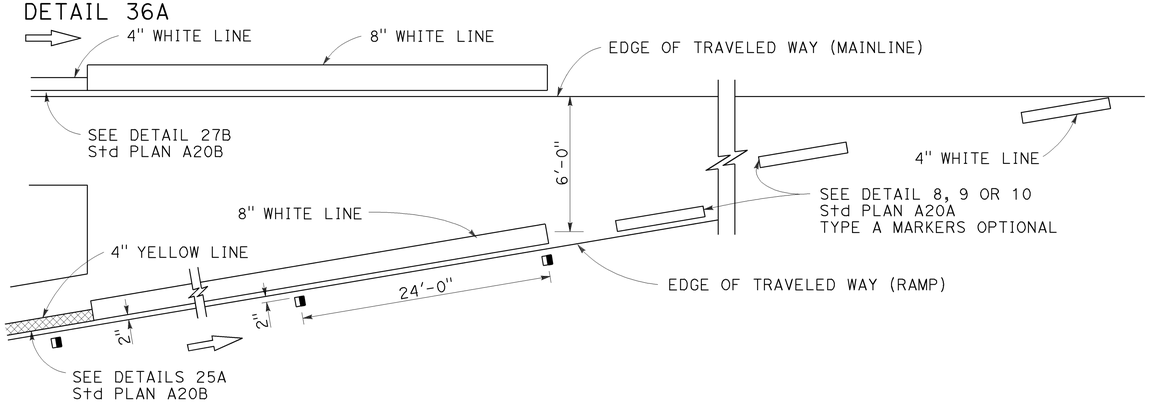

ENTRANCE RAMP NEUTRAL AREA (ACCELERATION LANE) TREATMENT

DETAIL 36B

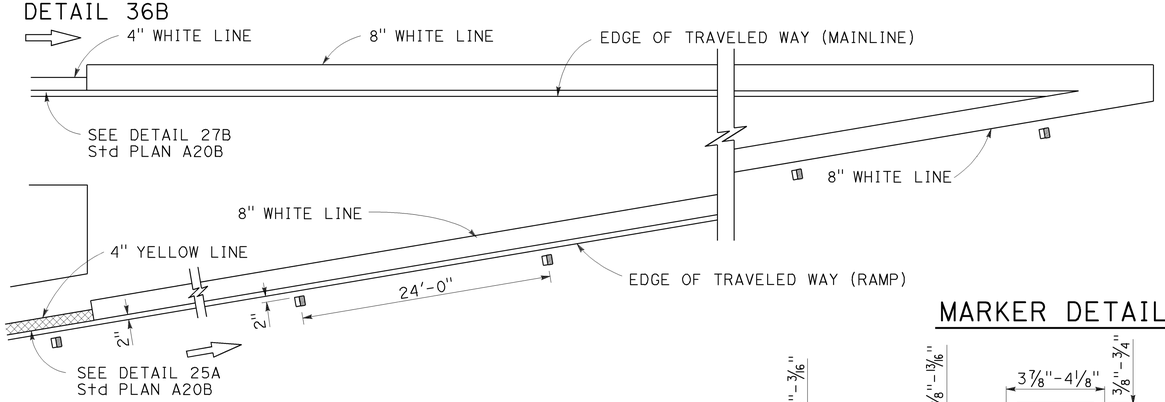

LANE DROP AT EXIT RAMPS

DETAIL 37

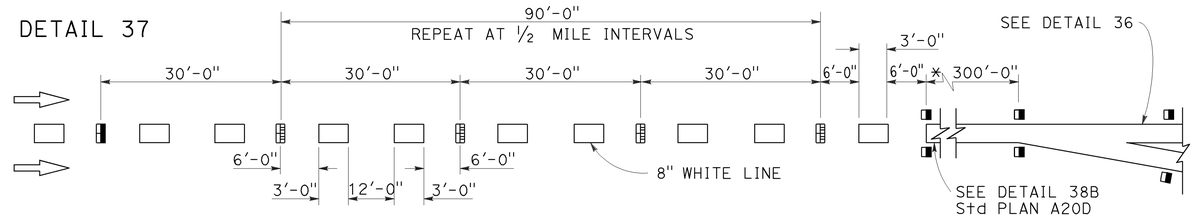

DETAIL 37A

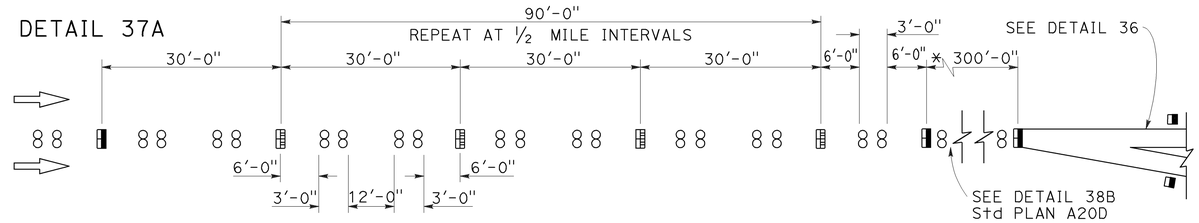

* The solid channelizing line shown may be omitted on short auxiliary lanes where weaving length is critical.

LANE DROP AT INTERSECTIONS

DETAIL 37B

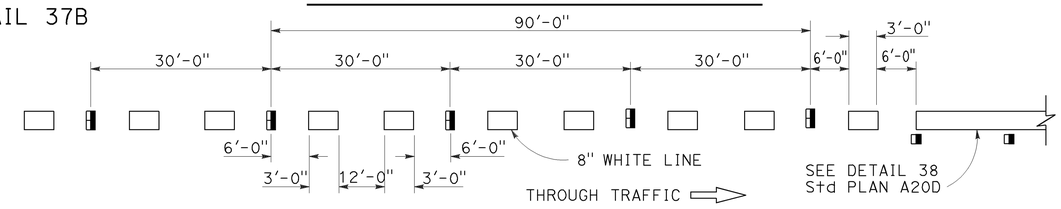

DETAIL 37C

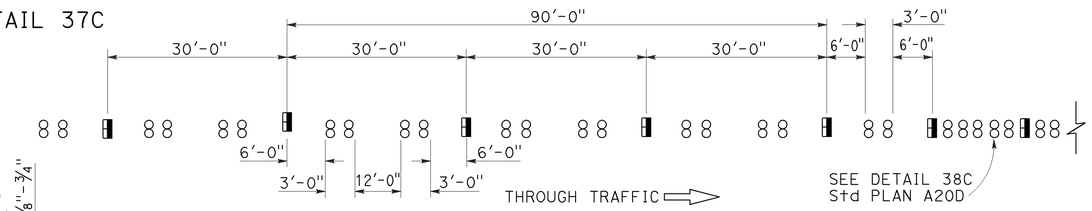

MARKER DETAILS

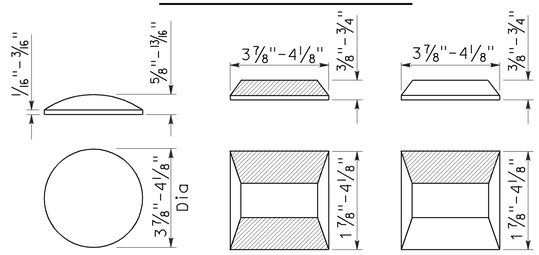

RETROREFLECTIVE FACE

LEGEND:

MARKERS

- TYPE A WHITE NON-REFLECTIVE
- TYPE C RED-CLEAR RETROREFLECTIVE
- TYPE G ONE-WAY CLEAR RETROREFLECTIVE

STATE OF CALIFORNIA
DEPARTMENT OF TRANSPORTATION

PAVEMENT MARKERS AND TRAFFIC LINE TYPICAL DETAILS

NO SCALE

RSP A20C DATED JULY 19, 2013 SUPERSEDES STANDARD PLAN A20C DATED MAY 20, 2011 - PAGE 11 OF THE STANDARD PLANS BOOK DATED 2010.

REVISED STANDARD PLAN RSP A20C

2010 REVISED STANDARD PLAN RSP A20C

4-29-13

Dist	COUNTY	ROUTE	POST MILES TOTAL PROJECT	SHEET No.	TOTAL SHEETS
03	ED	50	R30.7/R31.7	65	119

REGISTERED CIVIL ENGINEER

April 20, 2012
PLANS APPROVAL DATE

REGISTERED PROFESSIONAL ENGINEER
Roberta L. McLaughlin
No. C40375
Exp. 3-31-13
CIVIL
STATE OF CALIFORNIA

THE STATE OF CALIFORNIA OR ITS OFFICERS OR AGENTS SHALL NOT BE RESPONSIBLE FOR THE ACCURACY OR COMPLETENESS OF SCANNED COPIES OF THIS PLAN SHEET.

TO ACCOMPANY PLANS DATED 8-19-13

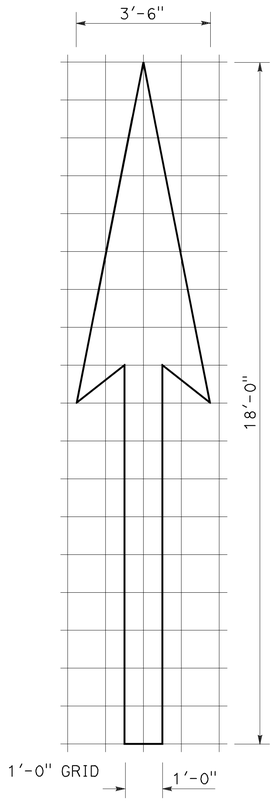

A=25 ft^2

TYPE I 18'-0" ARROW

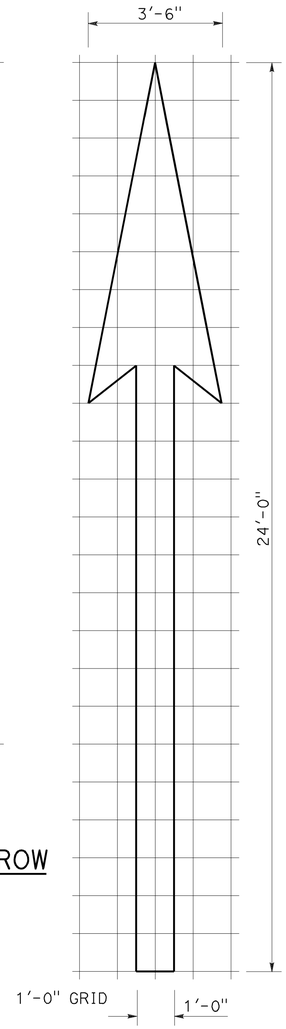

A=31 ft^2

TYPE I 24'-0" ARROW

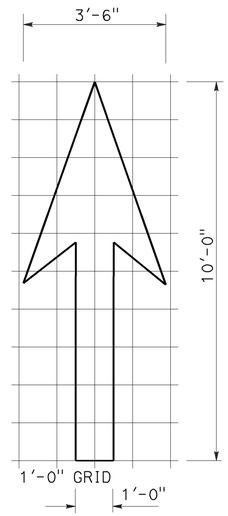

A=14 ft^2

TYPE I 10'-0" ARROW

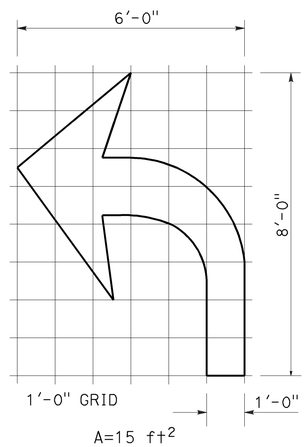

A=15 ft^2

TYPE IV (L) ARROW

(For Type IV (R) arrow, use mirror image)

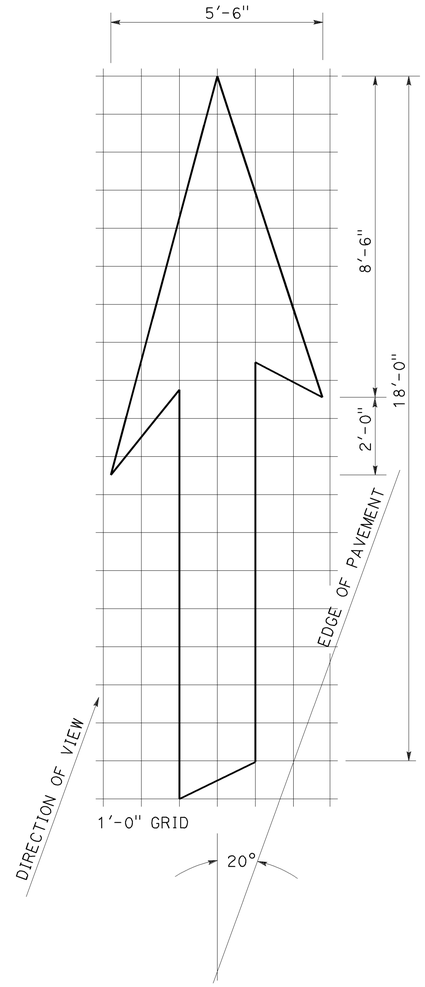

A=42 ft^2

TYPE VI ARROW

Right lane drop arrow
(For left lane, use mirror image)

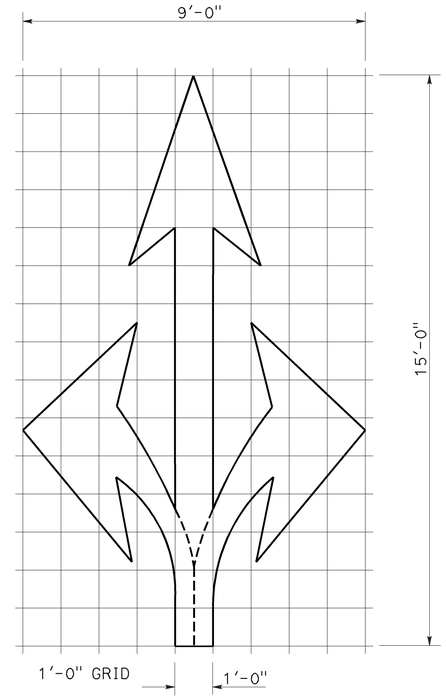

A=36 ft^2

TYPE VIII ARROW

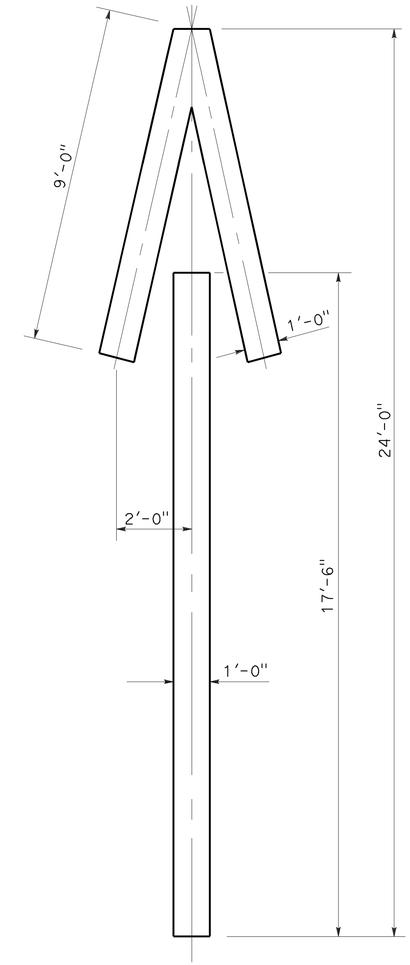

A=33 ft^2

TYPE V ARROW

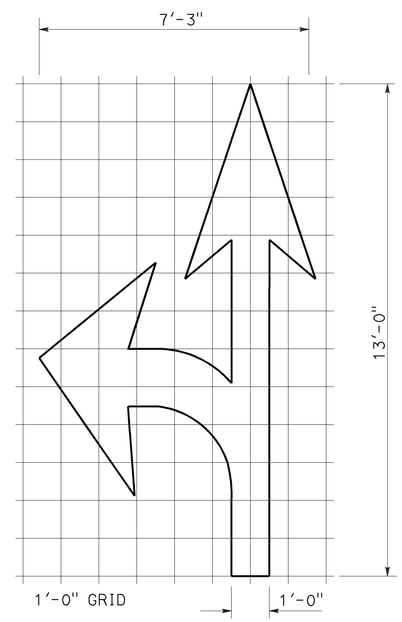

A=27 ft^2

TYPE VII (L) ARROW

(For Type VII (R) arrow, use mirror image)

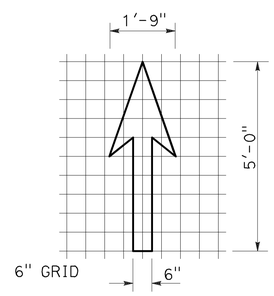

A=3.5 ft^2

BIKE LANE ARROW

NOTE:
Minor variations in dimensions may be accepted by the Engineer.

STATE OF CALIFORNIA
DEPARTMENT OF TRANSPORTATION

PAVEMENT MARKINGS ARROWS

NO SCALE

RSP A24A DATED APRIL 20, 2012 SUPERSEDES STANDARD PLAN A24A DATED MAY 20, 2011 - PAGE 13 OF THE STANDARD PLANS BOOK DATED 2010.

REVISED STANDARD PLAN RSP A24A

2010 REVISED STANDARD PLAN RSP A24A

3-14-12

Dist	COUNTY	ROUTE	POST MILES TOTAL PROJECT	SHEET No.	TOTAL SHEETS
03	ED	50	R30.7/R31.7	66	119

REGISTERED CIVIL ENGINEER

July 20, 2012
PLANS APPROVAL DATE

REGISTERED PROFESSIONAL ENGINEER
Roberta L. McLaughlin
No. C40375
Exp. 3-31-13
CIVIL
STATE OF CALIFORNIA

THE STATE OF CALIFORNIA OR ITS OFFICERS OR AGENTS SHALL NOT BE RESPONSIBLE FOR THE ACCURACY OR COMPLETENESS OF SCANNED COPIES OF THIS PLAN SHEET.

TO ACCOMPANY PLANS DATED 8-19-13

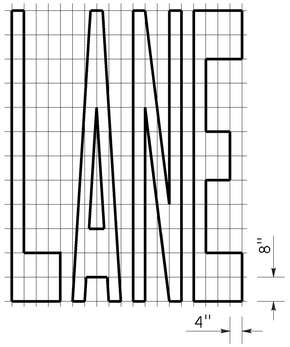

A=24 ft²

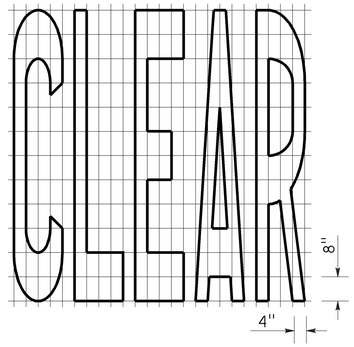

A=27 ft²

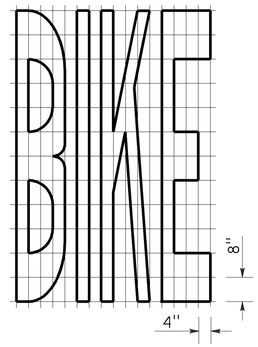

A=21 ft²

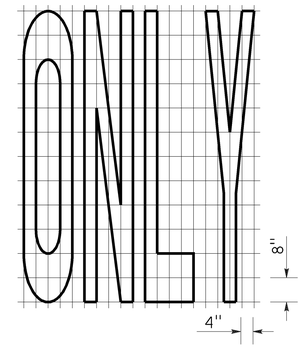

A=22 ft²

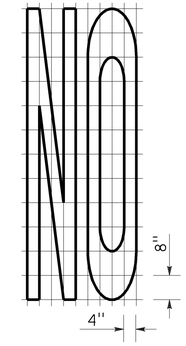

A=14 ft²

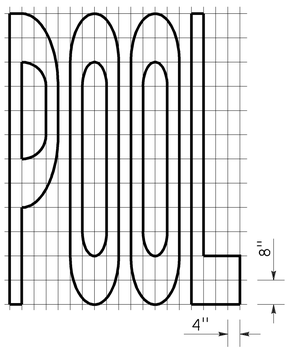

A=23 ft²

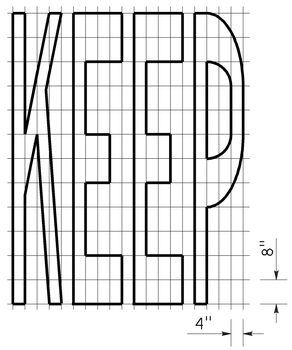

A=24 ft²

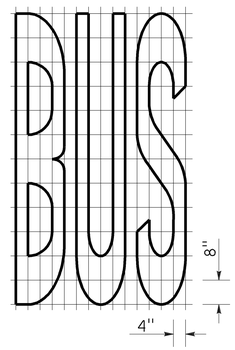

A=20 ft²

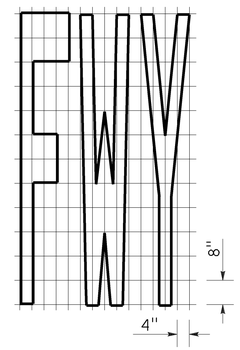

A=16 ft²

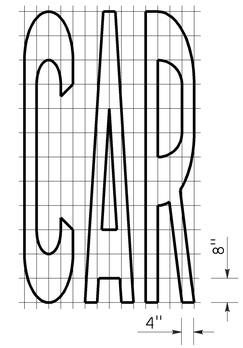

A=17 ft²

WORD MARKINGS			
ITEM	ft²	ITEM	ft²
LANE	24	NO	14
POOL	23	BIKE	21
CAR	17	BUS	20
CLEAR	27	ONLY	22
KEEP	24	FWY	16

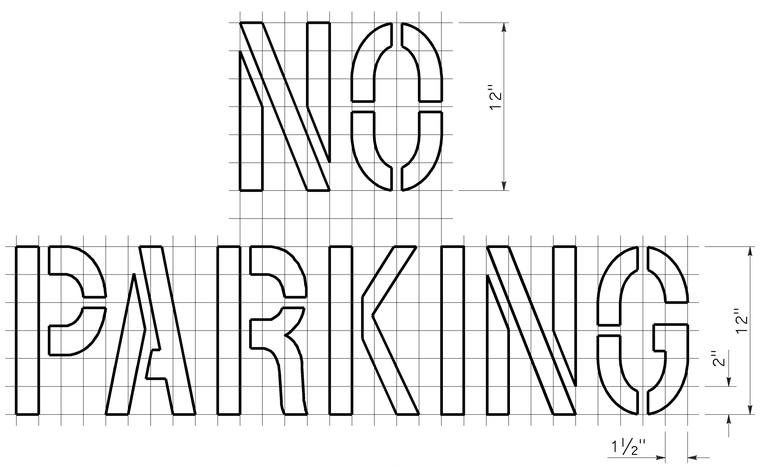

A=2 ft²
See Notes 6 and 7

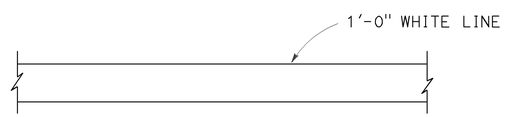

LIMIT LINE (STOP LINE)

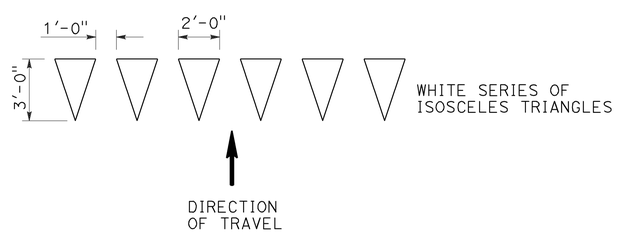

YIELD LINE

NOTES:

1. If a message consists of more than one word, it should read "UP", i.e., the first word should be nearest the driver.
2. The space between words should be at least four times the height of the characters for low speed roads, but not more than ten times the height of the characters. The space may be reduced appropriately where there is limited space because of local conditions.
3. Minor variations in dimensions may be accepted by the Engineer.
4. Portions of a letter, number or symbol may be separated by connecting segments not to exceed 2" in width.
5. The words "NO PARKING" pavement marking is to be used for parking facilities. For typical locations of markings, see Standard Plans A90A and A90B.
6. The words "NO PARKING", shall be painted in white letters no less than 1'-0" high on a contrasting background and located so that it is visible to traffic enforcement officials.

STATE OF CALIFORNIA
DEPARTMENT OF TRANSPORTATION

PAVEMENT MARKINGS WORDS, LIMIT AND YIELD LINES

NO SCALE

RSP A24E DATED JULY 20, 2012 SUPERSEDES STANDARD PLAN A24E
DATED MAY 20, 2011 - PAGE 17 OF THE STANDARD PLANS BOOK DATED 2010.

REVISED STANDARD PLAN RSP A24E

2010 REVISED STANDARD PLAN RSP A24E

Dist	COUNTY	ROUTE	POST MILES TOTAL PROJECT	SHEET No.	TOTAL SHEETS
03	ED	50	R30.7/R31.7	67	119

Randell D. Hiatt
REGISTERED CIVIL ENGINEER

July 19, 2013
PLANS APPROVAL DATE

REGISTERED PROFESSIONAL ENGINEER
Randell D. Hiatt
No. C50200
Exp. 6-30-15
CIVIL
STATE OF CALIFORNIA

THE STATE OF CALIFORNIA OR ITS OFFICERS OR AGENTS SHALL NOT BE RESPONSIBLE FOR THE ACCURACY OR COMPLETENESS OF SCANNED COPIES OF THIS PLAN SHEET.

TO ACCOMPANY PLANS DATED 8-19-13

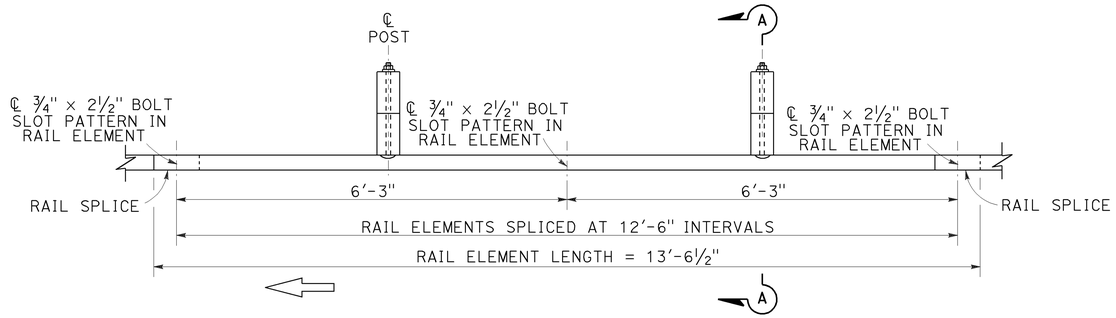

PLAN

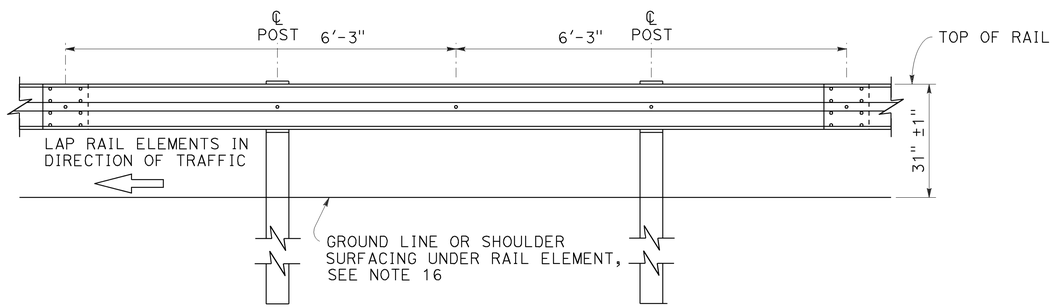

ELEVATION

MIDWEST GUARDRAIL SYSTEM WITH WOOD POST AND BLOCKS

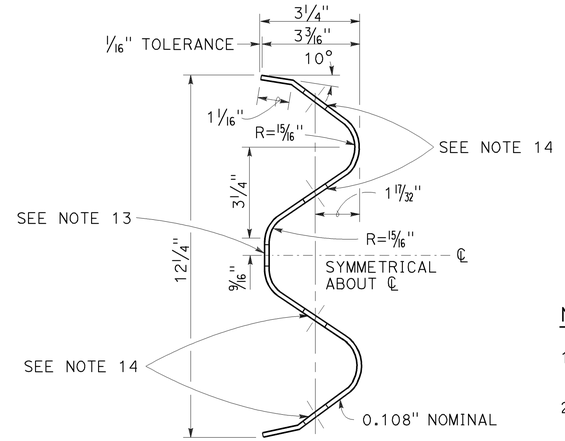

SECTION THRU RAIL ELEMENT

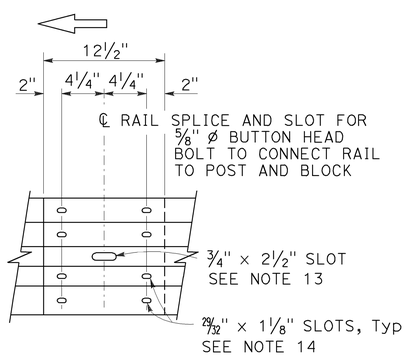

ELEVATION

RAIL ELEMENT SPLICE DETAIL

a) Connect the over lapped end of the rail elements with ⅝" ø × 1⅜" button head oval shoulder splice bolts inserted into the 29/32" × 1⅛" slots and bolted together with ⅝" ø recessed hex nuts. Recess of hex nut points toward rail element. A total of 8 bolts and nuts are to be used at each rail splice connection.

b) The ends of the rail elements are to be overlapped in the direction of traffic (see details).

c) Where end cap is to be attached to the end of a rail element, a total of 4 of the above described splice bolts and nuts are to be used.

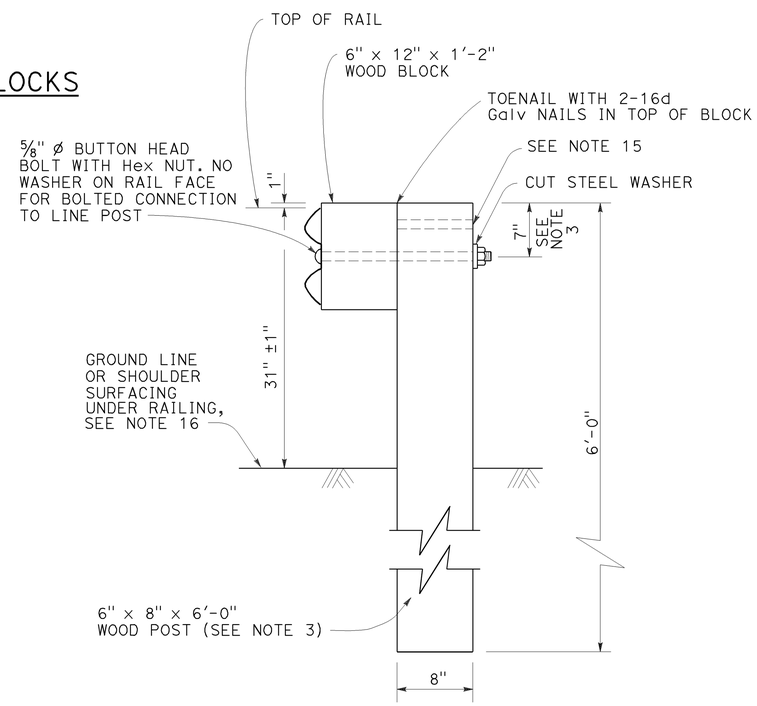

SECTION A-A

TYPICAL WOOD LINE POST INSTALLATION

See Note 4

NOTES:

1. For details of steel post installations, see Revised Standard Plan RSP A77L2.
2. For details of standard hardware used to construct MGS, see Revised Standard Plan RSP A77M1.
3. For details of wood posts and wood blocks used to construct MGS, see Revised Standard Plan RSP A77N1.
4. For additional installation details, see Revised Standard Plan RSP A77N3.
5. MGS post spacing to be 6'-3" center to center, except as otherwise noted.
6. For MGS typical layouts, see the A77P, A77Q and A77R Series of Standard Plans.
7. If railing is connected to terminal system end treatment, use 31" height terminal system end treatment.
8. For MGS end anchor details, see Revised Standard Plans RSP A77S1 and RSP A77T2.
9. For details of MGS transition to bridge railing, see Revised Standard Plan RSP A77U4.
10. For additional details of MSG connection to bridge railing, see Revised Standard Plans RSP A77U1, RSP A77U2 and RSP A77V1.
11. For MGS connection details to abutments and walls, see Revised Standard Plan RSP A77U3.
12. For typical MGS delineation and dike positioning details, see Revised Standard Plan RSP A77N4.
13. Slotted hole for bolted connection of rail element to block and post. See "Section Thru Rail Element".
14. Slotted holes for splice bolts to overlap ends of rail element. See "Section Thru Rail Element".
15. Additional hole in uppermost portion of line post is for potential future adjustments of railing height. See Revised Standard Plan RSP A77N1.
16. Install posts in soil.

STATE OF CALIFORNIA
DEPARTMENT OF TRANSPORTATION

MIDWEST GUARDRAIL SYSTEM STANDARD RAILING SECTION (WOOD POST WITH WOOD BLOCK)

NO SCALE

RSP A77L1 DATED JULY 19, 2013 SUPPLEMENTS STANDARD PLANS BOOK DATED 2010.

REVISED STANDARD PLAN RSP A77L1

2010 REVISED STANDARD PLAN RSP A77L1

7-3-13

Dist	COUNTY	ROUTE	POST MILES TOTAL PROJECT	SHEET No.	TOTAL SHEETS
03	ED	50	R30.7/R31.7	68	119

Randell D. Hiatt
REGISTERED CIVIL ENGINEER

July 19, 2013
PLANS APPROVAL DATE

REGISTERED PROFESSIONAL ENGINEER
Randell D. Hiatt
No. C50200
Exp. 6-30-15
CIVIL
STATE OF CALIFORNIA

THE STATE OF CALIFORNIA OR ITS OFFICERS OR AGENTS SHALL NOT BE RESPONSIBLE FOR THE ACCURACY OR COMPLETENESS OF SCANNED COPIES OF THIS PLAN SHEET.

TO ACCOMPANY PLANS DATED 8-19-13

2010 REVISED STANDARD PLAN RSP A77M1

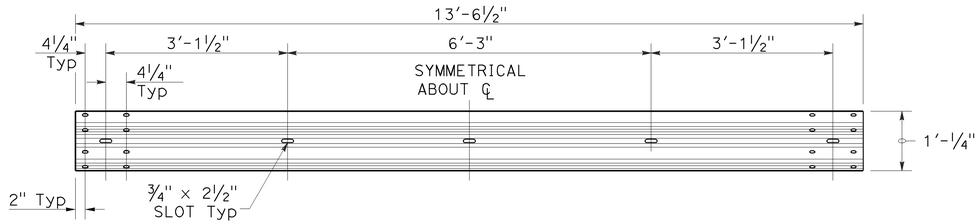

TYPICAL RAIL ELEMENT

NOTE:

1. Slotted holes for splice bolts to overlap ends of rail element.

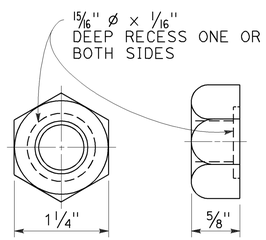

⅝" ø RECESS NUT

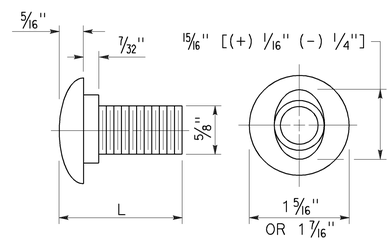

⅝" ø BUTTON HEAD BOLT

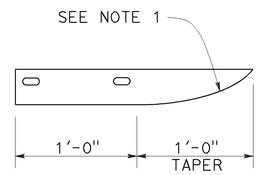

PLAN

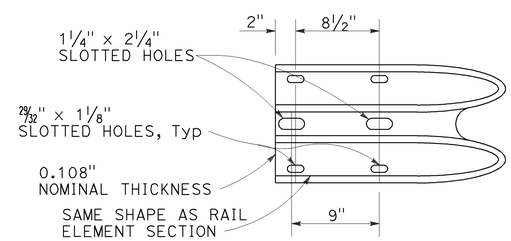

ELEVATION
END CAP
(TYPE A)

BUTTON HEAD BOLT

L	THREAD LENGTH
1⅜"	FULL THREAD LENGTH
2"	FULL THREAD LENGTH
10"	4" Min THREAD LENGTH
18"	4" Min THREAD LENGTH
20"	4" Min THREAD LENGTH
22"	4" Min THREAD LENGTH
26"	4" Min THREAD LENGTH
36"	4" Min THREAD LENGTH
** 2¾"	2" Min THREAD LENGTH
** 19"	4" Min THREAD LENGTH

** For nested rail applications.

STATE OF CALIFORNIA
DEPARTMENT OF TRANSPORTATION

MIDWEST GUARDRAIL SYSTEM STANDARD HARDWARE

NO SCALE

RSP A77M1 DATED JULY 19, 2013 SUPPLEMENTS THE STANDARD PLANS BOOK DATED 2010.

REVISED STANDARD PLAN RSP A77M1

Dist	COUNTY	ROUTE	POST MILES TOTAL PROJECT	SHEET No.	TOTAL SHEETS
03	ED	50	R30.7/R31.7	69	119

Randell D. Hiatt
REGISTERED CIVIL ENGINEER

July 19, 2013
PLANS APPROVAL DATE

REGISTERED PROFESSIONAL ENGINEER
Randell D. Hiatt
No. C50200
Exp. 6-30-15
CIVIL
STATE OF CALIFORNIA

THE STATE OF CALIFORNIA OR ITS OFFICERS OR AGENTS SHALL NOT BE RESPONSIBLE FOR THE ACCURACY OR COMPLETENESS OF SCANNED COPIES OF THIS PLAN SHEET.

TO ACCOMPANY PLANS DATED 8-19-13

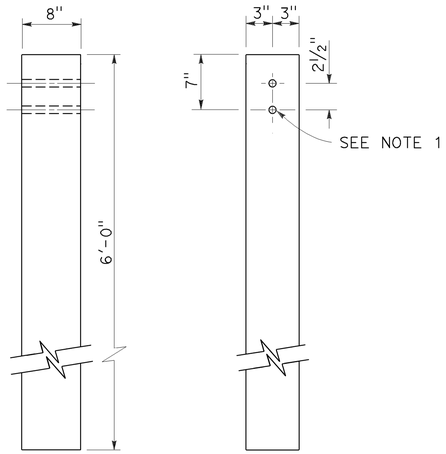

SIDE FRONT

6" x 8" WOOD POST
See Note 3

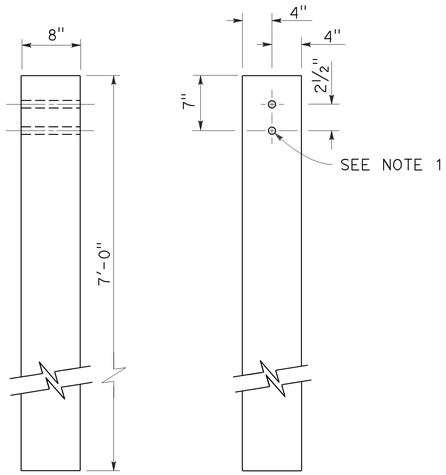

SIDE FRONT

8" x 8" WOOD POST
See Note 4

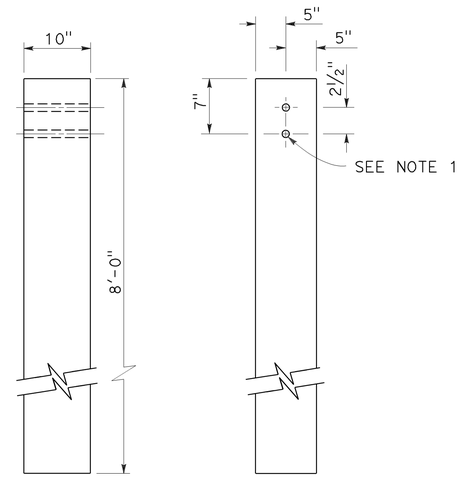

SIDE FRONT

10" x 10" WOOD POST
See Note 5

NOTES:

1. All holes in wood posts and blocks shall be 3/4" Dia ± 1/16".
2. Dimensions shown for wood post are nominal.
3. This post and block combination used for standard line post sections of MGS.
4. This post and 8" x 12" block combination used for line post sections of MGS on narrow roadways.
5. This post and 8" x 12" block combination is typically used where strengthened line post sections of MGS are warranted to shield fixed objects.
6. See Revised Standard Plan RSP A77L3 for use of 6" x 8" and 8" x 8" wood blocks.

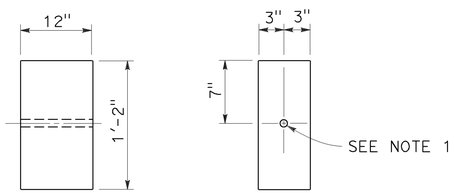

SIDE FRONT

6" x 12" WOOD BLOCK
See Note 3

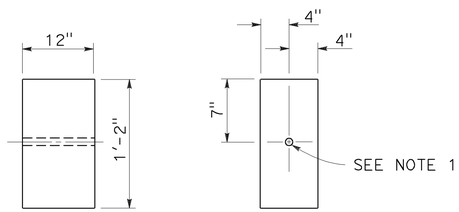

SIDE FRONT

8" x 12" WOOD BLOCK

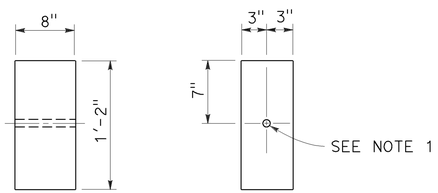

SIDE FRONT

6" x 8" WOOD BLOCK
Only for use with metal beam guard rail see Note 6

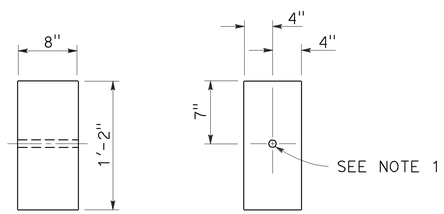

SIDE FRONT

8" x 8" WOOD BLOCK
Only for use with metal beam guard rail see Note 6

STATE OF CALIFORNIA
DEPARTMENT OF TRANSPORTATION

MIDWEST GUARDRAIL SYSTEM WOOD POST AND WOOD BLOCK DETAILS

NO SCALE

RSP A77N1 DATED JULY 19, 2013 SUPPLEMENTS THE STANDARD PLANS BOOK DATED 2010.

REVISED STANDARD PLAN RSP A77N1

2010 REVISED STANDARD PLAN RSP A77N1

7-3-13

Dist	COUNTY	ROUTE	POST MILES TOTAL PROJECT	SHEET No.	TOTAL SHEETS
03	ED	50	R30.7/R31.7	70	119

Randell D. Hiatt
REGISTERED CIVIL ENGINEER

July 19, 2013
PLANS APPROVAL DATE

REGISTERED PROFESSIONAL ENGINEER
Randell D. Hiatt
No. C50200
Exp. 6-30-15
CIVIL
STATE OF CALIFORNIA

THE STATE OF CALIFORNIA OR ITS OFFICERS OR AGENTS SHALL NOT BE RESPONSIBLE FOR THE ACCURACY OR COMPLETENESS OF SCANNED COPIES OF THIS PLAN SHEET.

TO ACCOMPANY PLANS DATED 8-19-13

2010 REVISED STANDARD PLAN RSP A77N3

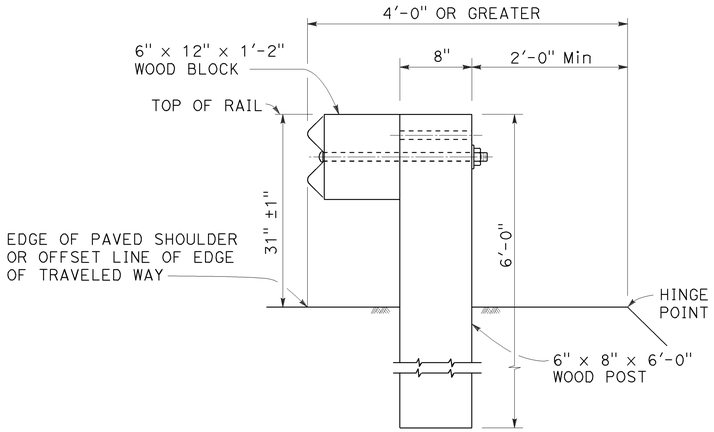

DETAIL A

TYPICAL ROADWAY INSTALLATION

See Note 1

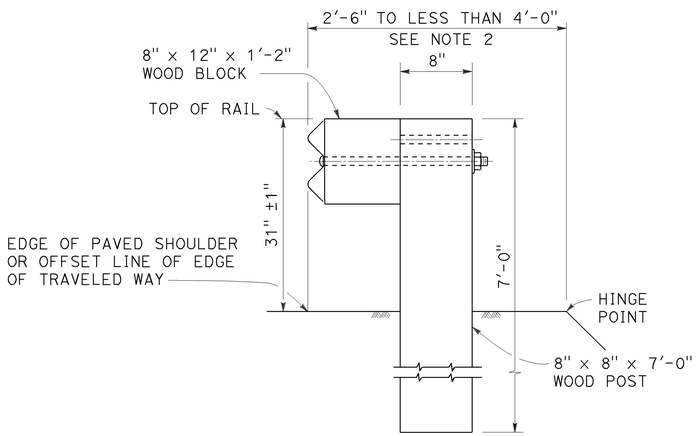

DETAIL B

NARROW ROADWAY INSTALLATION

See Note 1

POST EMBEDMENT

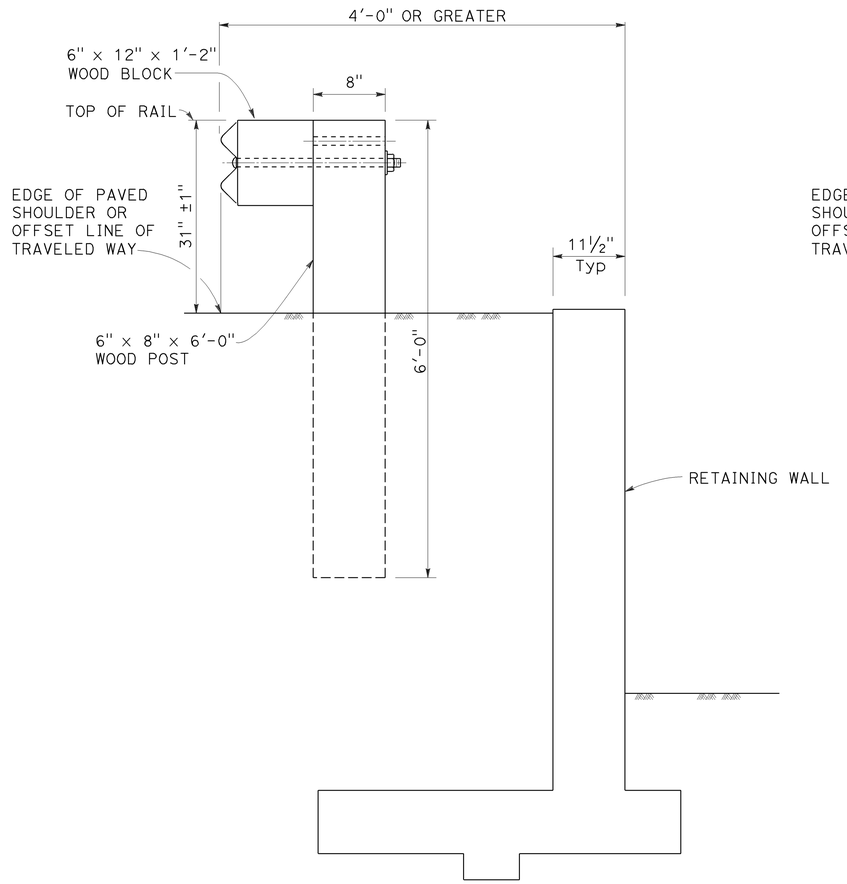

DETAIL C

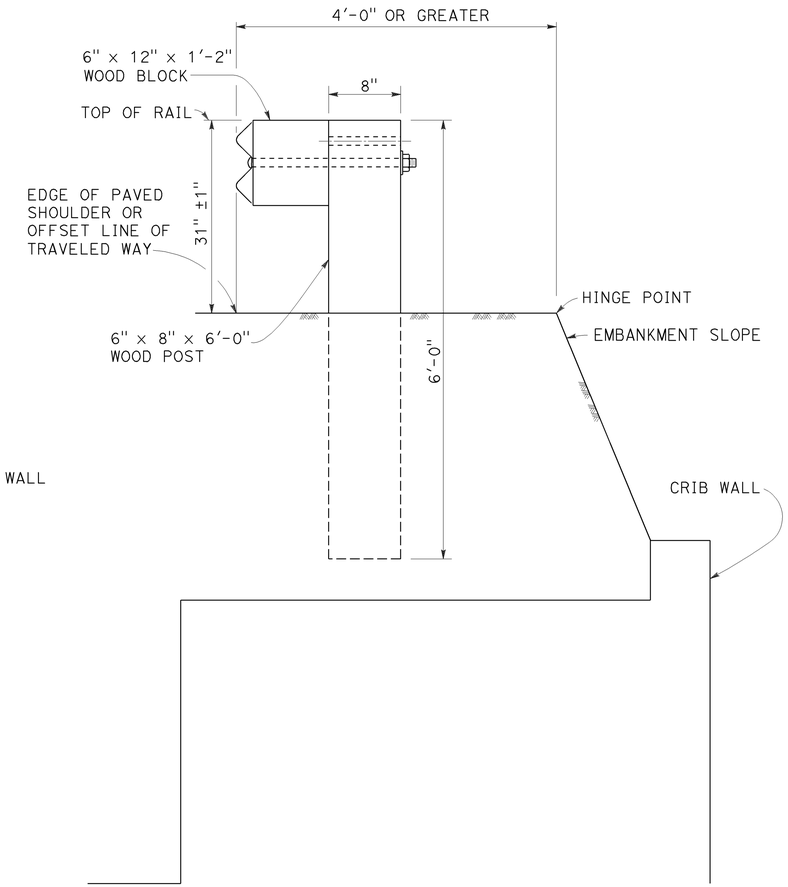

DETAIL D

INSTALLATION AT EARTH RETAINING WALLS

NOTES:

1. These installation details also applicable to steel line post installations. For Detail A, C, and D, where steel line post installations are constructed, W6 x 8.5 or W6 x 9 steel post, 6'-0" in length, with 6" x 12" x 1'-2" notched wood blocks or notched recycled plastic blocks are to be used in place of the size of wood post and wood block shown. For Detail B, where steel line post installations are constructed, or W6 x 15 steel post, 8'-0" in length, with 8" x 12" x 1'-2" notched wood blocks or notched recycled plastic blocks are to be used in place of the size of wood post and wood block shown. For additional installation details, see Revised Standard Plan RSP A77L1 and RSP A77L2.
2. Where the distance between the face of the rail and the hinge point is less than 2'-6", see the Project Plans for special details.
3. For dike positioning with MGS installations, see Revised Standard Plan RSP A77N4.

STATE OF CALIFORNIA
DEPARTMENT OF TRANSPORTATION

MIDWEST GUARDRAIL SYSTEM TYPICAL LINE POST EMBEDMENT AND HINGE POINT OFFSET DETAILS

NO SCALE

RSP A77N3 DATED JULY 19, 2013 SUPPLEMENTS THE STANDARD PLANS BOOK DATED 2010.

REVISED STANDARD PLAN RSP A77N3

Dist	COUNTY	ROUTE	POST MILES TOTAL PROJECT	SHEET No.	TOTAL SHEETS
03	ED	50	R30.7/R31.7	71	119

Randell D. Hiatt
REGISTERED CIVIL ENGINEER

July 19, 2013
PLANS APPROVAL DATE

REGISTERED PROFESSIONAL ENGINEER
Randell D. Hiatt
No. C50200
Exp. 6-30-15
CIVIL
STATE OF CALIFORNIA

THE STATE OF CALIFORNIA OR ITS OFFICERS OR AGENTS SHALL NOT BE RESPONSIBLE FOR THE ACCURACY OR COMPLETENESS OF SCANNED COPIES OF THIS PLAN SHEET.

TO ACCOMPANY PLANS DATED 8-19-13

NOTES:

1. When necessary to place dike more than 7" in front of face of MGS, only Type C dike may be used. For dike details, see Revised Standard Plan RSP A87B.
2. For standard railing post embedment, see Revised Standard Plan RSP A77N3.
3. MGS delineation to be used where shown on the Project Plans.
4. When dike or curb is placed under MGS, the maximum height of the dike or curb shall be 6". Mountable dike should not be used. For dike and curb details, see Revised Standard Plans RSP A87A and RSP A87B.
5. For details of typical distance between the face of rail and hinge point, see Revised Standard Plan RSP A77N3.
6. For steel line posts, use 1/4 - 20 self-tapping screws in 0.22" diameter holes or 1/4" bolts in 9/32" diameter holes.

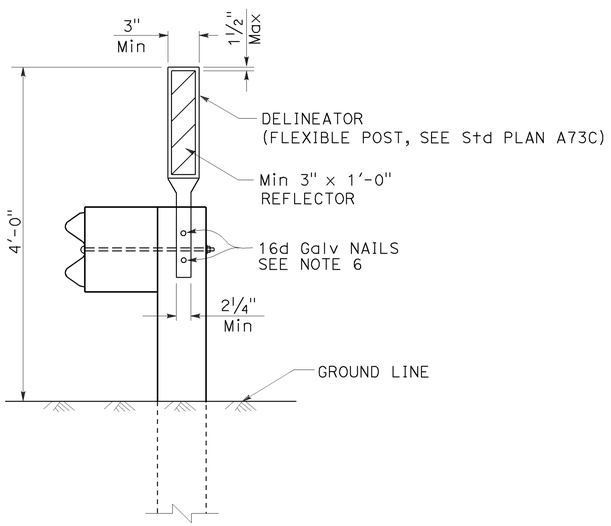

MGS DELINEATION
See Note 3

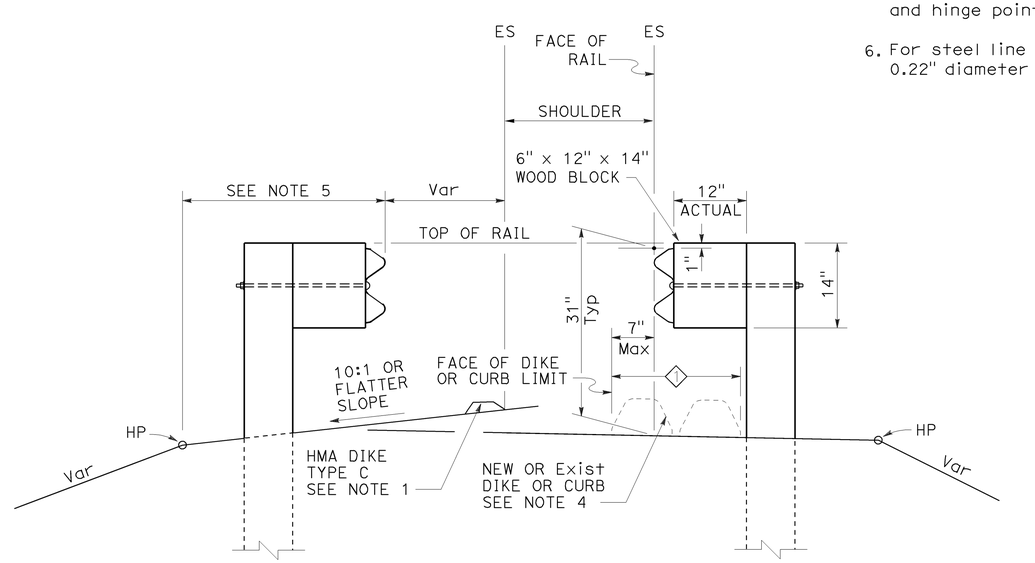

DIKE POSITIONING
See Note 1

1 PERMISSIBLE DIKE OR CURB PLACEMENT AREA

STATE OF CALIFORNIA
DEPARTMENT OF TRANSPORTATION

MIDWEST GUARDRAIL SYSTEM TYPICAL RAILING DELINEATION AND DIKE POSITIONING DETAILS

NO SCALE

RSP A77N4 DATED JULY 19, 2013 SUPPLEMENTS THE STANDARD PLANS BOOK DATED 2010.

REVISED STANDARD PLAN RSP A77N4

2010 REVISED STANDARD PLAN RSP A77N4

7-10-13

Dist	COUNTY	ROUTE	POST MILES TOTAL PROJECT	SHEET No.	TOTAL SHEETS
03	ED	50	R30.7/R31.7	72	119

Randell D. Hiatt
REGISTERED CIVIL ENGINEER

July 19, 2013
PLANS APPROVAL DATE

REGISTERED PROFESSIONAL ENGINEER
Randell D. Hiatt
No. C50200
Exp. 6-30-15
CIVIL
STATE OF CALIFORNIA

THE STATE OF CALIFORNIA OR ITS OFFICERS OR AGENTS SHALL NOT BE RESPONSIBLE FOR THE ACCURACY OR COMPLETENESS OF SCANNED COPIES OF THIS PLAN SHEET.

TO ACCOMPANY PLANS DATED 8-19-13

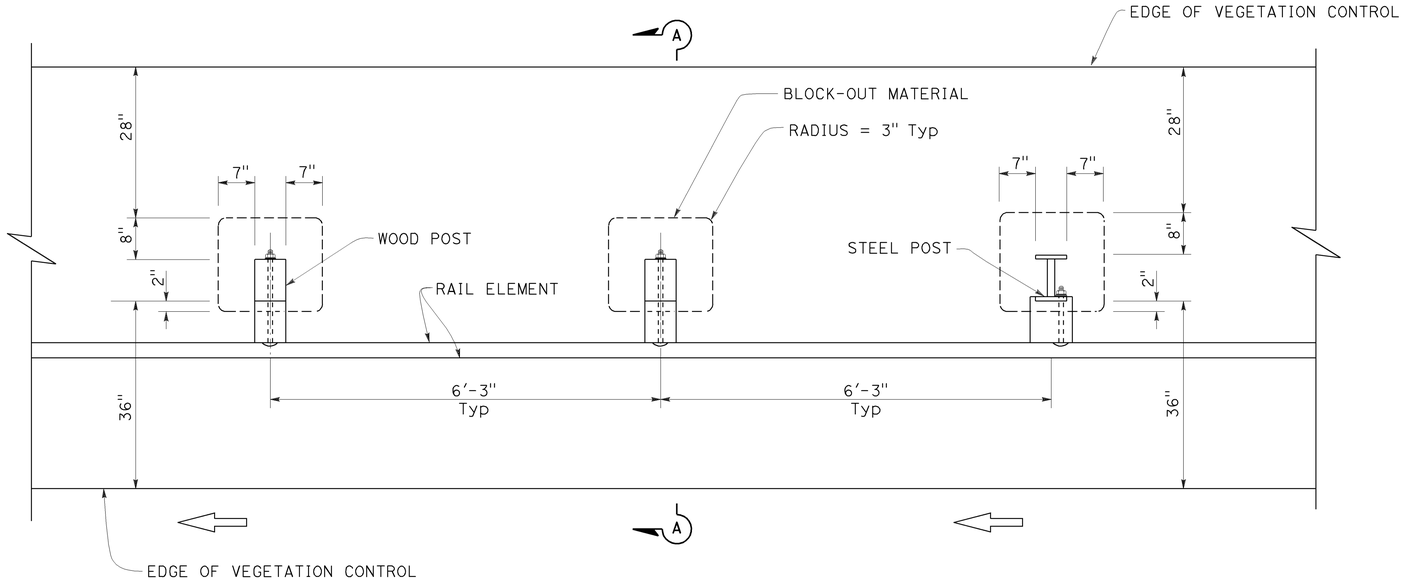

PLAN

NOTES:

1. Where the distance between back of post and hinge point is less than 42", construct vegetation control to 6" from hinge point while maintaining the 8" block-out at back of post. If the 8" block-out at back of post can not be maintained, construct vegetation control flush with the back edge of post.
2. Where dike is constructed under railing, construct vegetation control to back edge of dike. Where paved shoulder is constructed within 36" in front of the post, construct vegetation control to the edge of paved shoulder.
3. For wood post sizes, see Revised Standard Plan RSP A77N1.
4. For steel post sizes, see Revised Standard Plan RSP A77N2.
5. For details not shown, see Revised Standard Plans RSP A77L1 and RSP A77L2.

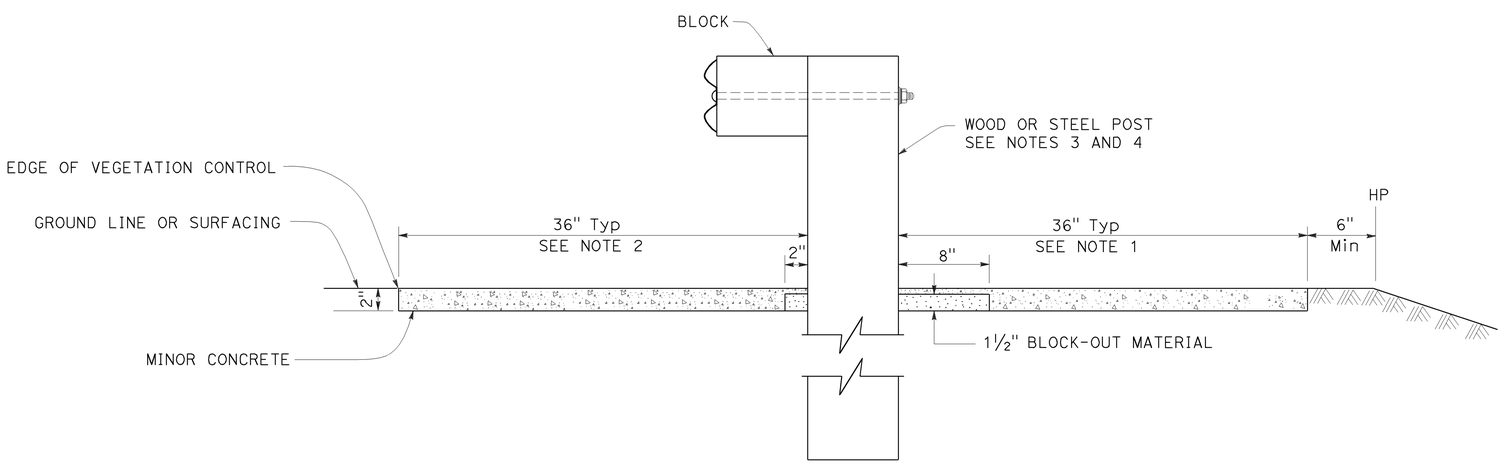

SECTION A-A

STATE OF CALIFORNIA
DEPARTMENT OF TRANSPORTATION

MIDWEST GUARDRAIL SYSTEM TYPICAL VEGETATION CONTROL STANDARD RAILING SECTION

NO SCALE

RSP A77N5 DATED JULY 19, 2013 SUPPLEMENTS THE STANDARD PLANS BOOK DATED 2010.

REVISED STANDARD PLAN RSP A77N5

2010 REVISED STANDARD PLAN RSP A77N5

7-3-13

Dist	COUNTY	ROUTE	POST MILES TOTAL PROJECT	SHEET No.	TOTAL SHEETS
03	ED	50	R30.7/R31.7	73	119

Randell D. Hiatt
REGISTERED CIVIL ENGINEER

July 19, 2013
PLANS APPROVAL DATE

REGISTERED PROFESSIONAL ENGINEER
Randell D. Hiatt
No. C50200
Exp. 6-30-15
CIVIL
STATE OF CALIFORNIA

THE STATE OF CALIFORNIA OR ITS OFFICERS OR AGENTS SHALL NOT BE RESPONSIBLE FOR THE ACCURACY OR COMPLETENESS OF SCANNED COPIES OF THIS PLAN SHEET.

TO ACCOMPANY PLANS DATED 8-19-13

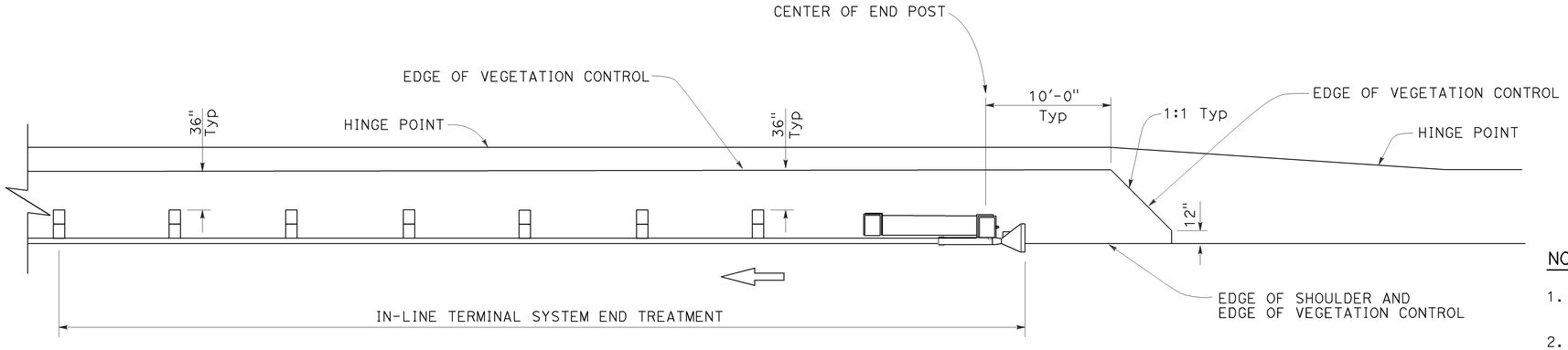

PLAN

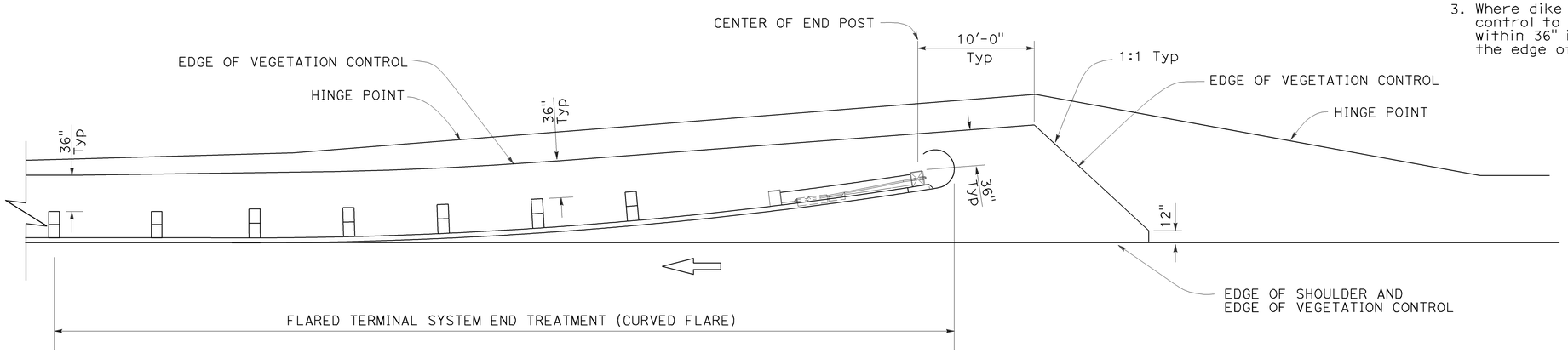

PLAN

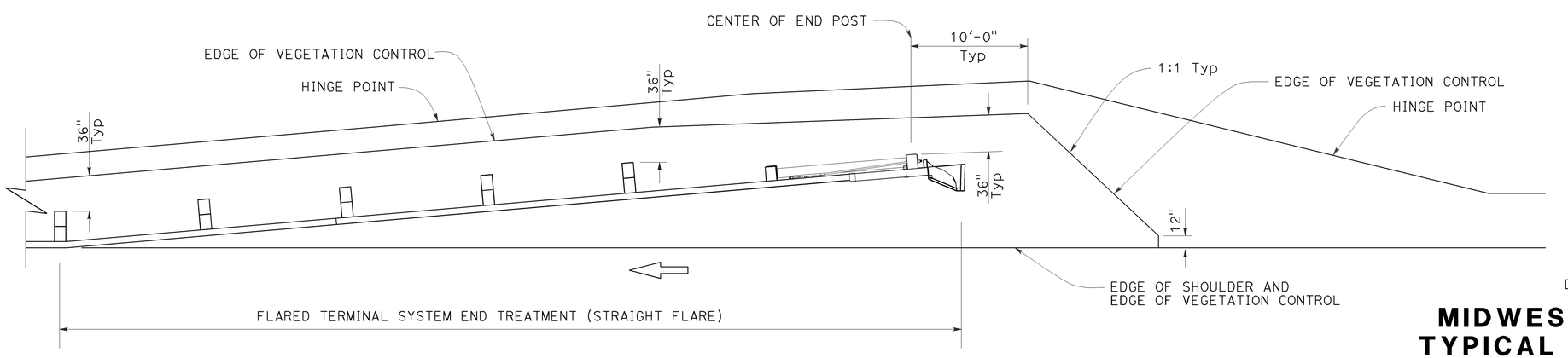

PLAN

NOTES:

1. See Revised Standard Plan RSP A77N5 for additional vegetation control details.
2. Where the distance between back of post and hinge point is less than 42", construct vegetation control to 6" from hinge point while maintaining the 8" block-out at back of post. If the 8" block-out at back of post can not be maintained, construct vegetation control flush with the back edge of post.
3. Where dike is constructed under railing, construct vegetation control to back edge of dike. Where paved shoulder is constructed within 36" in front of the post, construct vegetation control to the edge of paved shoulder.

STATE OF CALIFORNIA
DEPARTMENT OF TRANSPORTATION

MIDWEST GUARDRAIL SYSTEM TYPICAL VEGETATION CONTROL FOR TERMINAL SYSTEM END TREATMENTS

NO SCALE

RSP A77N6 DATED JULY 19, 2013 SUPPLEMENTS THE STANDARD PLANS BOOK DATED 2010.

REVISED STANDARD PLAN RSP A77N6

2010 REVISED STANDARD PLAN RSP A77N6

Dist	COUNTY	ROUTE	POST MILES TOTAL PROJECT	SHEET No.	TOTAL SHEETS
03	ED	50	R30.7/R31.7	74	119

Randell D. Hiatt
REGISTERED CIVIL ENGINEER

July 19, 2013
PLANS APPROVAL DATE

REGISTERED PROFESSIONAL ENGINEER
Randell D. Hiatt
No. C50200
Exp. 6-30-15
CIVIL
STATE OF CALIFORNIA

THE STATE OF CALIFORNIA OR ITS OFFICERS OR AGENTS SHALL NOT BE RESPONSIBLE FOR THE ACCURACY OR COMPLETENESS OF SCANNED COPIES OF THIS PLAN SHEET.

TO ACCOMPANY PLANS DATED 8-19-13

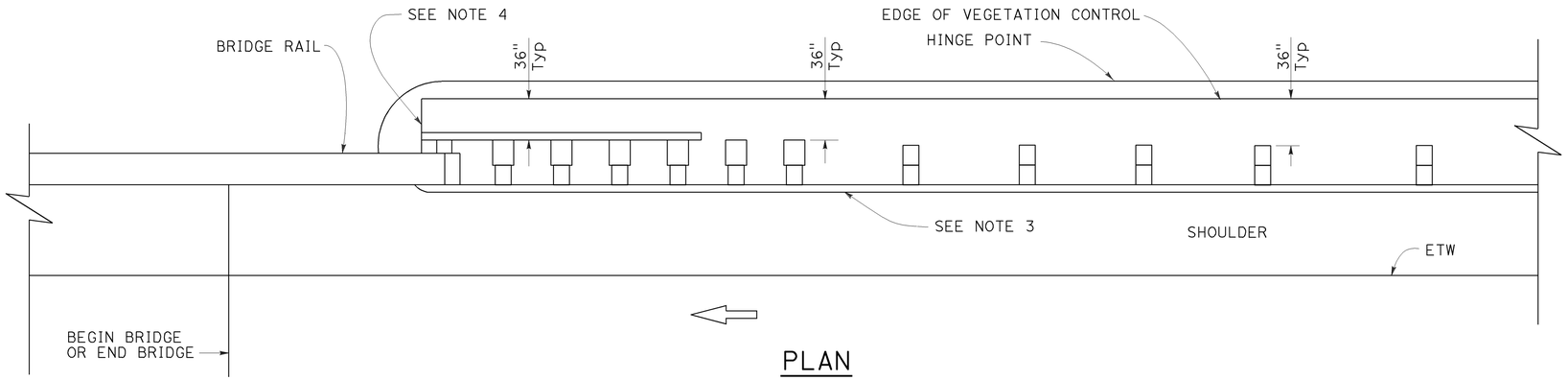

PLAN

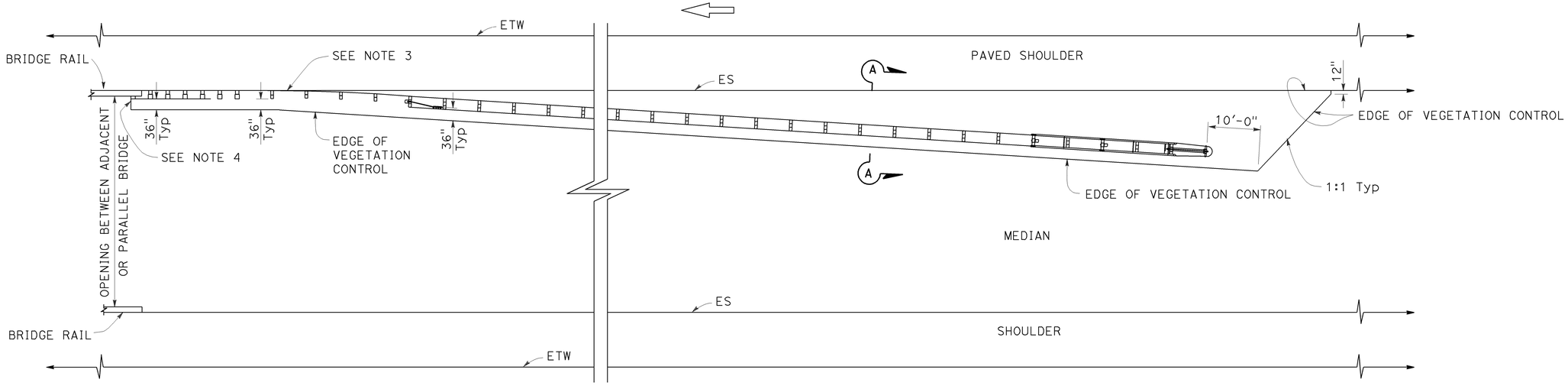

PLAN

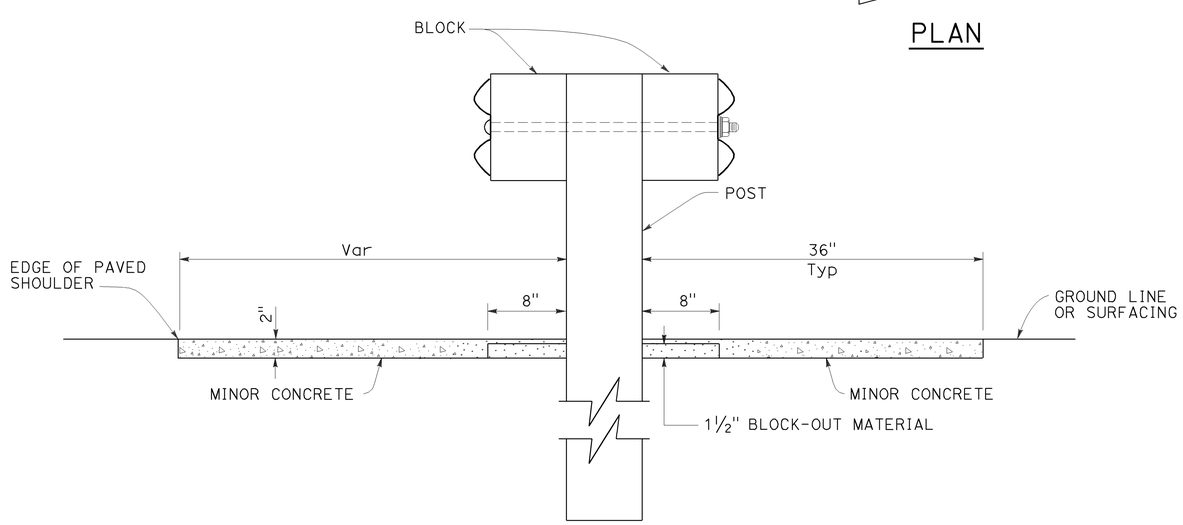

SECTION A-A

NOTES:

1. See Revised Standard Plan RSP A77N5 for additional vegetation control details.
2. Where the distance between back of post and hinge point is less than 42", construct vegetation control to 6" from hinge point while maintaining the 8" block-out at back of post. If the 8" block-out at back of post can not be maintained, construct vegetation control flush with the back edge of post.
3. Where dike is constructed under railing, construct vegetation control to back edge of dike. Where paved shoulder is constructed within 36" in front of the post, construct vegetation control to the edge of paved shoulder.
4. End vegetation control at end of backside rail element.

STATE OF CALIFORNIA
DEPARTMENT OF TRANSPORTATION

MIDWEST GUARDRAIL SYSTEM TYPICAL VEGETATION CONTROL AT STRUCTURE APPROACH

NO SCALE

RSP A77N7 DATED JULY 19, 2013 SUPPLEMENTS THE STANDARD PLANS BOOK DATED 2010.

REVISED STANDARD PLAN RSP A77N7

2010 REVISED STANDARD PLAN RSP A77N7

6-12-13

Dist	COUNTY	ROUTE	POST MILES TOTAL PROJECT	SHEET No.	TOTAL SHEETS
03	ED	50	R30.7/R31.7	75	119

Randell D. Hiatt
REGISTERED CIVIL ENGINEER

July 19, 2013
PLANS APPROVAL DATE

REGISTERED PROFESSIONAL ENGINEER
Randell D. Hiatt
No. C50200
Exp. 6-30-15
CIVIL
STATE OF CALIFORNIA

THE STATE OF CALIFORNIA OR ITS OFFICERS OR AGENTS SHALL NOT BE RESPONSIBLE FOR THE ACCURACY OR COMPLETENESS OF SCANNED COPIES OF THIS PLAN SHEET.

TO ACCOMPANY PLANS DATED 8-19-13

2010 REVISED STANDARD PLAN RSP A77Q1

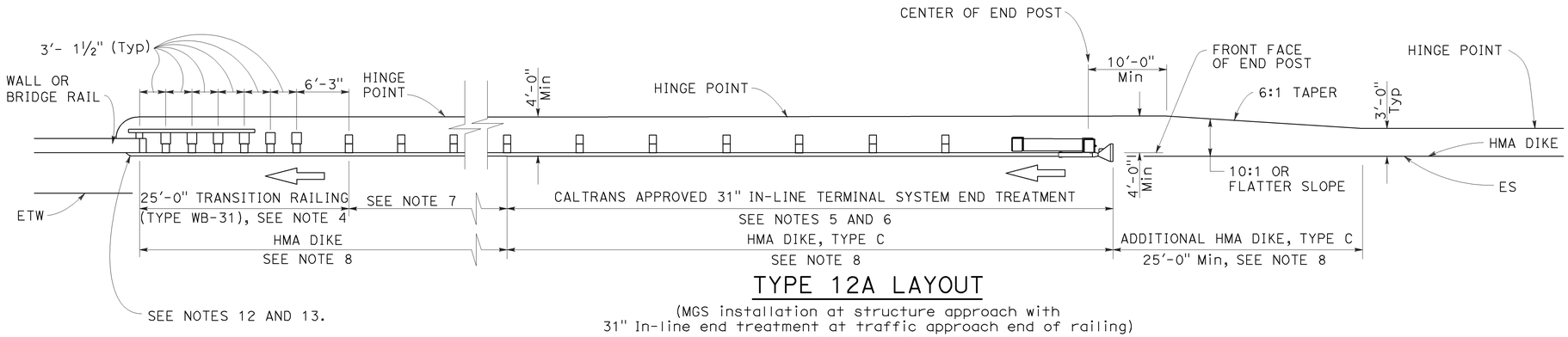

TYPE 12A LAYOUT

(MGS installation at structure approach with
31" In-line end treatment at traffic approach end of railing)
See Notes 9

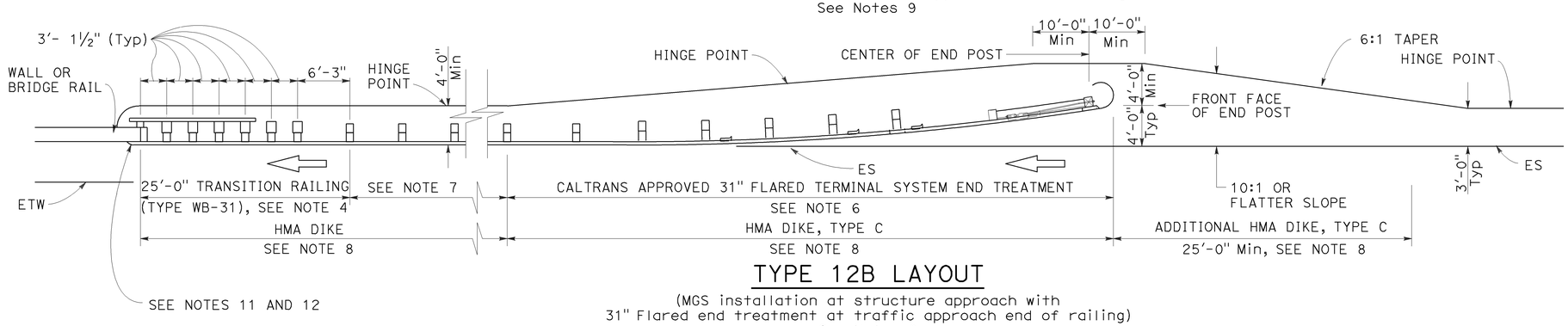

TYPE 12B LAYOUT

(MGS installation at structure approach with
31" Flared end treatment at traffic approach end of railing)
See Notes 9

NOTES:

1. Line post, blocks and hardware to be used are shown on Revised Standard Plans RSP A77L1, RSP A77L2, RSP A77M1, RSP A77N1 and RSP A77N2.
2. MGS post spacing to be 6'-3" center to center, except as otherwise noted.
3. Except as noted, line posts are 6" x 8" x 6'-0" wood with 6" x 12" x 1'-2" wood blocks. W6 x 8.5 or W6 x 9 steel posts, 6'-0" in length, with 6" x 12" x 1'-2" notched wood blocks or plastic blocks may be used for 6" x 8" x 6'-0" wood posts with 6" x 12" x 1'-2" wood blocks where applicable and when specified.
4. For Transition Railing (Type WB-31) details for Types 12A and 12B Layouts, see Revised Standard Plan RSP A77U4.
5. 31" in-line terminal system end treatments are used where site conditions will not accommodate a 31" flared end treatment.
6. The type 31" of terminal system end treatment to be used will be shown on the Project Plans.
7. Dependent on site conditions (embankment height, side slopes, or other fixed objects), it may be advisable to construct additional guard railing (a length equal to multiples of 12'-6" with 6'-3" post spacing) between the transition railing and end treatment. A 12.5 degree angle of departure can be drawn on the Project Plans from the edge of traveled way through the outer most point of the fixed object to determine the additional length of railing needed.
8. Where placement of dike is required with guard railing installations, see Revised Standard Plan RSP A77N4 for dike positioning details.
9. Type 12A or Type 12B Layouts are typically used:
   a. To the right of approaching traffic, at the end of a structure, on two-lane conventional highway where the roadbed width across the structure is less than 40 feet.
   b. To the left of approaching traffic, at the end of a structure, on two-lane conventional highway where the roadbed width across the structure is less than 40 feet.
   c. To the right of approaching traffic at the end of each structure on multilane freeways or expressways with separate adjacent or parallel bridges.
   d. To the right of approaching traffic at the end of the structure on multilane freeways or expressways with decked median on the bridge.
10. See Revised Standard Plan RSP A77Q3 for typical layout used left of approaching traffic at the ends of each structure on multilane freeways or expressways with separate adjacent or parallel bridges.
11. For additional details of typical connections to bridge rail, see Connection Detail AA on Revised Standard Plans RSP A77U1 and RSP A77U2 and Connection Detail FF on Revised Standard Plans RSP A77V1 and RSP A77V2.
12. For additional details of a typical connection to walls or abutments, see Revised Standard Plan RSP A77U3.

STATE OF CALIFORNIA
DEPARTMENT OF TRANSPORTATION

MIDWEST GUARDRAIL SYSTEM TYPICAL LAYOUTS FOR STRUCTURE APPROACH

NO SCALE

RSP A77Q1 DATED JULY 19, 2013 SUPPLEMENTS THE STANDARD PLANS BOOK DATED 2010.

REVISED STANDARD PLAN RSP A77Q1

Dist	COUNTY	ROUTE	POST MILES TOTAL PROJECT	SHEET No.	TOTAL SHEETS
03	ED	50	R30.7/R31.7	76	119

Randell D. Hiatt
REGISTERED CIVIL ENGINEER

July 19, 2013
PLANS APPROVAL DATE

REGISTERED PROFESSIONAL ENGINEER
Randell D. Hiatt
No. C50200
Exp. 6-30-15
CIVIL
STATE OF CALIFORNIA

THE STATE OF CALIFORNIA OR ITS OFFICERS OR AGENTS SHALL NOT BE RESPONSIBLE FOR THE ACCURACY OR COMPLETENESS OF SCANNED COPIES OF THIS PLAN SHEET.

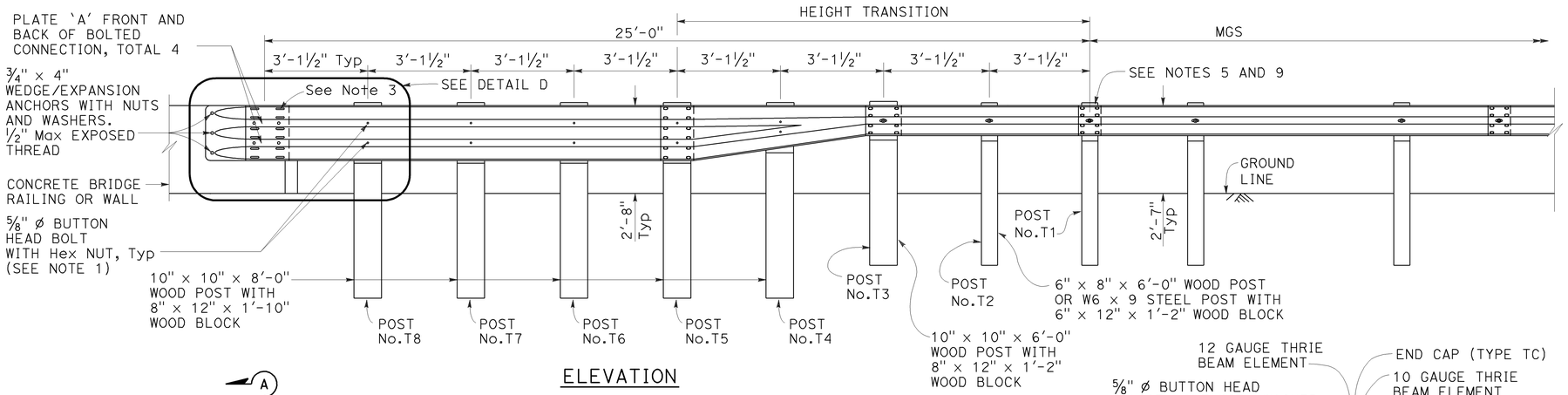

ELEVATION

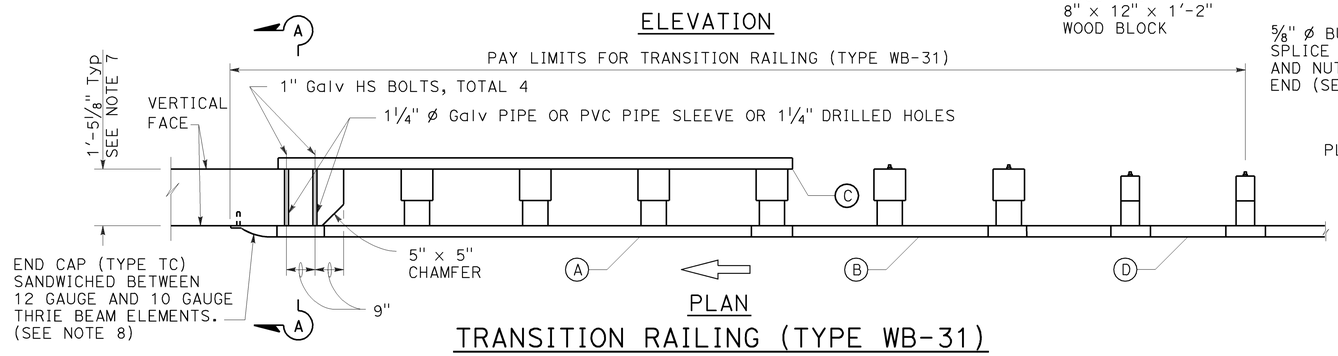

PLAN

TRANSITION RAILING (TYPE WB-31)

(No Blockout Attachment)

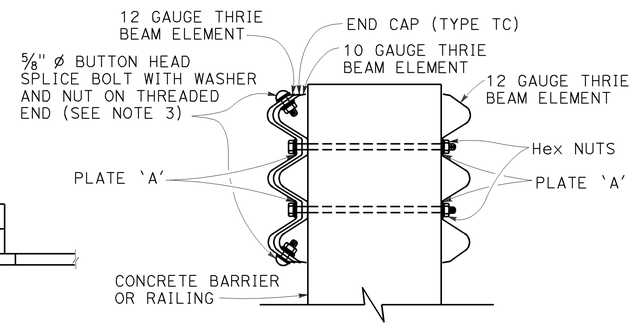

SECTION A-A

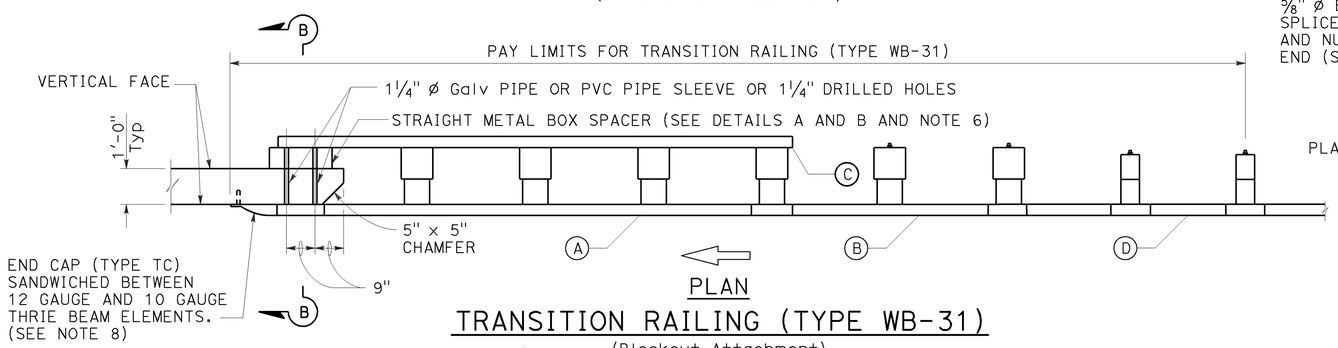

PLAN

TRANSITION RAILING (TYPE WB-31)

(Blockout Attachment)

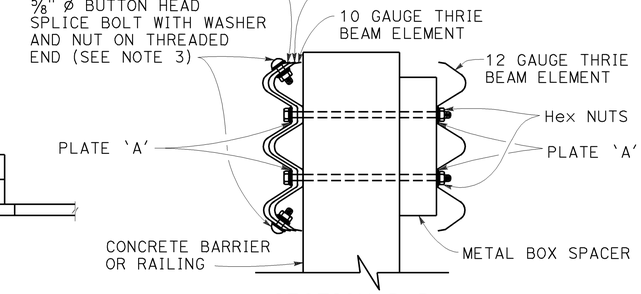

SECTION B-B

NOTES:

TO ACCOMPANY PLANS DATED 8-19-13

1. Use 5/8" ø Button head bolts and hex nuts for connections to posts. No washer on rail face for bolted connections to post.
2. The nested rail elements, end cap, and 'W' beam to thrie beam element may be spliced together prior to bolting the elements to the wood post and concrete barrier or railing.
3. Exterior splice bolt holes for rail element splices at Post No. T5 and the connection to the concrete barrier or railing shall be the standard 29/32" x 1 1/8" slot size. Interior splice bolt holes at these locations may be increased up to 1 1/4" ø. Only the top 4 and the bottom 4 splice bolts with washers and nuts are required for rail splices at Post No. T5 and the connection to the concrete barrier or railing.
4. The top elevation of Posts No. T2 through No. T7 shall not project more than 1" above the top elevation of the rail element.
5. Typically, the railing connected to Transition Railing (Type WB-31) will be either standard railing section of MGS with height transition ratio of 150:1 or a Caltrans approved 31" end treatment attached to Post No. T1.
6. The depth of the metal box spacer varies from the 9 1/8" to 1 1/2" and is dependent on the width of the concrete railing or wall. The combined dimension for the depth of the metal box spacer plus the width of railing or wall is typically 21 1/8". Where the space between the backside of the concrete railing or wall and the rear thrie beam element is less than 1 1/2", metal plates similar to Plate 'A' are to be used as spacers.
7. Where the width of the concrete railing or wall is greater than 17 1/8", wood blocks are to be used to fill the space created between the backside of Posts No. T4 through No. T7 and the rear thrie beam element. These wood blocks shall be 8" in width and 1'-2" in length. The dimension between the front thrie beam element and the rear thrie beam element is to match the width of the concrete railing or wall.
8. End cap may be installed over 12 gauge and 10 gauge thrie beam elements where transition railing is installed on the departure end of bridge railing.
9. Conform standard railing section height to 31" at Post No. T1 using height transition ratio of 150:1.

LEGEND:

(A) NESTED THRIE BEAM ELEMENTS (ONE 12 GAUGE ELEMENT NESTED OVER ONE 10 GAUGE ELEMENT).

(B) ONE ASYMMETRICAL 10 GAUGE "W" BEAM TO THRIE BEAM ELEMENT.

(C) ONE 12 GAUGE THRIE BEAM ELEMENT.

(D) ONE 10 GAUGE "W" BEAM RAIL ELEMENT (7'-3 1/2" LENGTH)

10 GAUGE = 0.138" THICK
12 GAUGE = 0.108" THICK

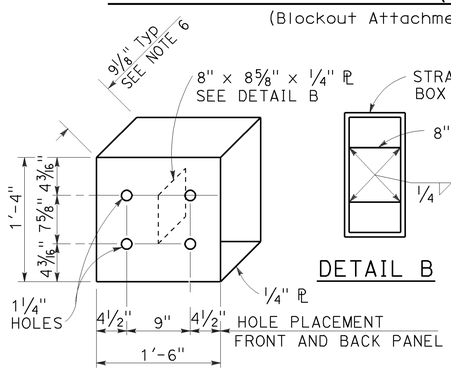

DETAIL A

STRAIGHT METAL BOX SPACER

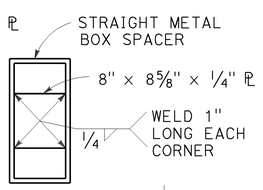

DETAIL B

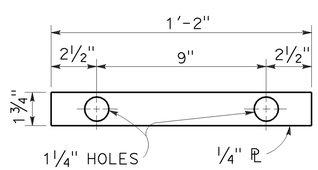

DETAIL C

PLATE 'A'

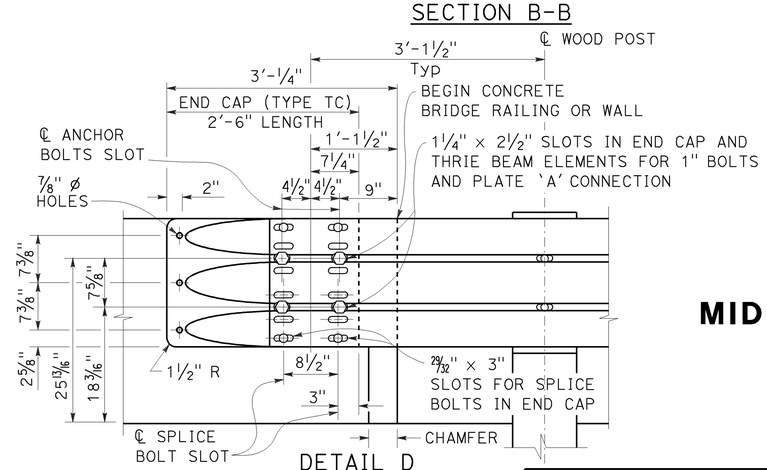

DETAIL D

STATE OF CALIFORNIA
DEPARTMENT OF TRANSPORTATION

MIDWEST GUARDRAIL SYSTEM TRANSITION RAILING (TYPE WB-31)

NO SCALE

RSP A77U4 DATED JULY 19, 2013 SUPPLEMENTS THE STANDARD PLANS BOOK DATED 2010.

REVISED STANDARD PLAN RSP A77U4

2010 REVISED STANDARD PLAN RSP A77U4

7-8-13

Dist	COUNTY	ROUTE	POST MILES TOTAL PROJECT	SHEET No.	TOTAL SHEETS
03	ED	50	R30.7/R31.7	77	119

REGISTERED CIVIL ENGINEER

July 19, 2013
PLANS APPROVAL DATE

REGISTERED PROFESSIONAL ENGINEER Michael Janzen No. 44788 Exp. 03-31-14 CIVIL STATE OF CALIFORNIA

THE STATE OF CALIFORNIA OR ITS OFFICERS OR AGENTS SHALL NOT BE RESPONSIBLE FOR THE ACCURACY OR COMPLETENESS OF SCANNED COPIES OF THIS PLAN SHEET.

TO ACCOMPANY PLANS DATED 8-19-13

2010 REVISED STANDARD PLAN RSP A87A

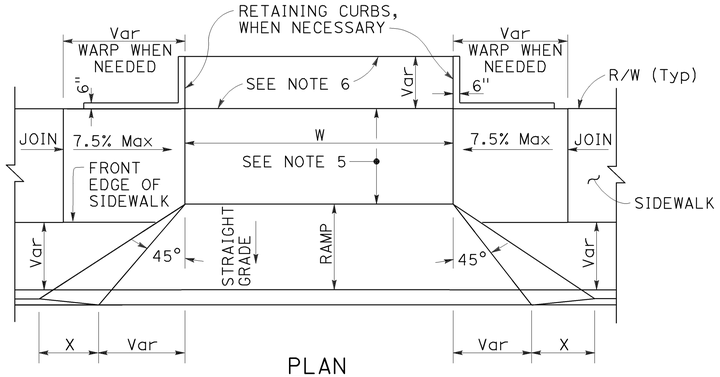

PLAN

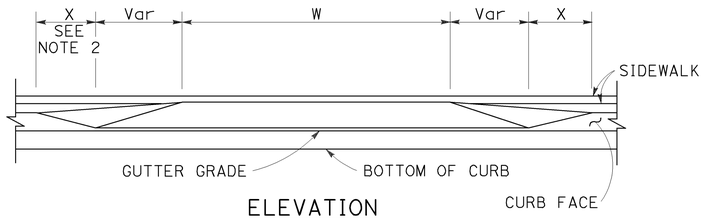

ELEVATION

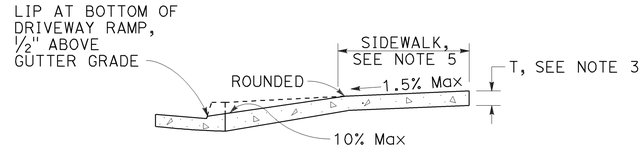

CASE A

Typical driveway, sidewalk not depressed

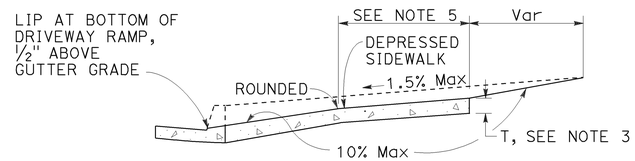

CASE B

Driveway with depressed sidewalk

SECTIONS

DRIVEWAYS

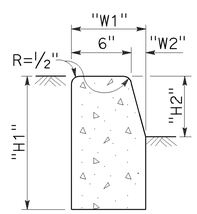

TYPE A1 CURBS

See Table A

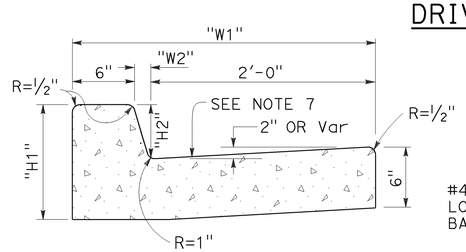

TYPE A2 CURBS

See Table A

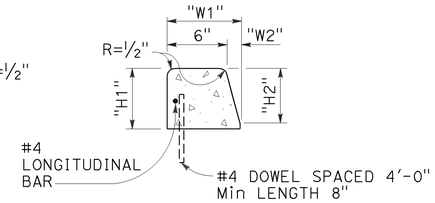

TYPE A3 CURBS

Superimposed on existing pavement
See Table A

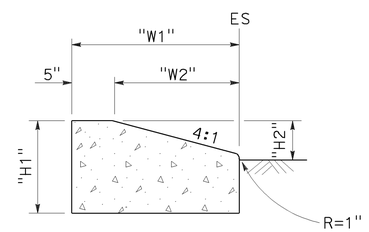

TYPE D CURBS

See Table A

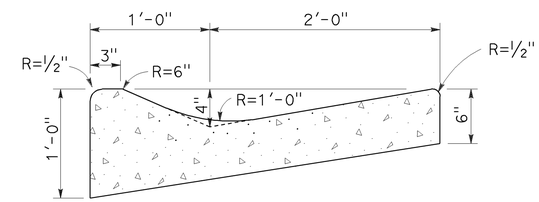

TYPE E CURB

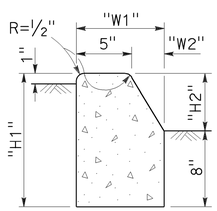

TYPE B1 CURBS

See Table A

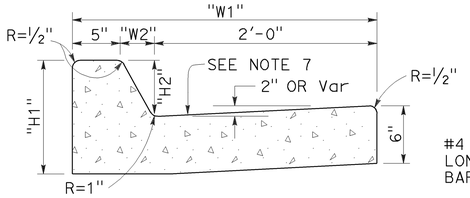

TYPE B2 CURBS

See Table A

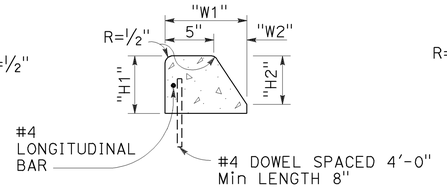

TYPE B3 CURBS

Superimposed on existing pavement
See Table A

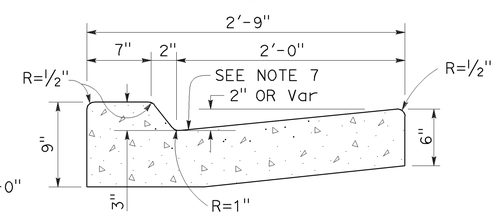

TYPE B4 CURBS

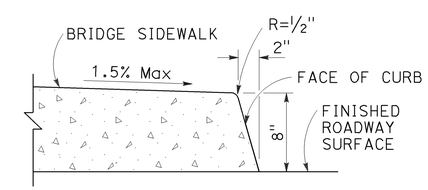

TYPE H CURB

On Bridges

CURBS

TABLE A

CURB TYPE	DIMENSIONS			
	"H1"	"H2"	"W1"	"W2"
A1-6	1'-2"	6"	7½"	1½"
A1-8	1'-4"	8"	8"	2"
A2-6	1'-0"	6"	2'-7½"	1½"
A2-8	1'-2"	8"	2'-8"	2"
A3-6	6"	5"	7¼"	1¼"
A3-8	8"	7"	7¾"	1¾"
B1-4	1'-0"	4"	7½"	2½"
B1-6	1'-2"	6"	9"	4"
B2-4	10"	4"	2'-7½"	2½"
B2-6	1'-0"	6"	2'-9"	4"
B3-4	4"	3"	7"	2"
B3-6	6"	5"	8½"	3½"
D-4	10"	4"	1'-6"	1'-1"
D-6	1'-0"	6"	2'-2"	1'-9"

CURB QUANTITIES

TYPE	CUBIC YARDS PER LINEAR FOOT
A1-6	0.02585
A1-8	0.03084
A2-6	0.05903
A2-8	0.06379
A3-6	0.01036
A3-8	0.01435
B1-4	0.02185
B1-6	0.02930
B2-4	0.05515
B2-6	0.06171
B3-4	0.00641
B3-6	0.01074
B4	0.05709
D-4	0.04083
D-6	0.06804
E	0.06661

NOTES:

1. Case A driveway section typically applies.
2. X=3'-0" except for curb heights over 10" where 4:1 slopes shall be used on curb slope.
3. Sidewalk and ramp thickness "T" at driveway shall be 4" for residental and 6" for commercial.
4. Difference in slope of the driveway ramp and the slope of a line between the gutter and a point on the roadway 5'-0" from gutter line shall not exceed 15%. Reduce driveway ramp slope, not gutter slope, where required.
5. Minimum width of clear passageway for sidewalk shall be 4'-2".
6. Retaining curbs and acquisition of construction easement may be necessary for narrow sidewalks or curb heights in excess of 6".
7. Across the pedestrian route at curb ramp locations, the gutter pan slope shall not exceed 1" of depth for each 2'-0" of width.

STATE OF CALIFORNIA
DEPARTMENT OF TRANSPORTATION

CURBS AND DRIVEWAYS

NO SCALE

RSP A87A DATED JULY 19, 2013 SUPERSEDES STANDARD PLAN A87A
DATED MAY 20, 2011 - PAGE 119 OF THE STANDARD PLANS BOOK DATED 2010.

REVISED STANDARD PLAN RSP A87A

Dist	COUNTY	ROUTE	POST MILES TOTAL PROJECT	SHEET No.	TOTAL SHEETS
03	ED	50	R30.7/R31.7	78	119

REGISTERED CIVIL ENGINEER

July 19, 2013
PLANS APPROVAL DATE

REGISTERED PROFESSIONAL ENGINEER
Michael Janzen
No. 44788
Exp. 03-31-14
CIVIL
STATE OF CALIFORNIA

THE STATE OF CALIFORNIA OR ITS OFFICERS OR AGENTS SHALL NOT BE RESPONSIBLE FOR THE ACCURACY OR COMPLETENESS OF SCANNED COPIES OF THIS PLAN SHEET.

TO ACCOMPANY PLANS DATED 8-19-13

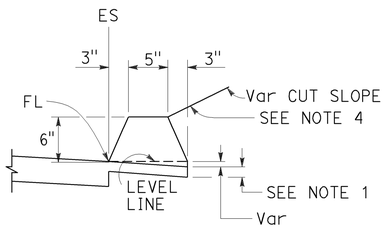

TYPE A
See Note 3

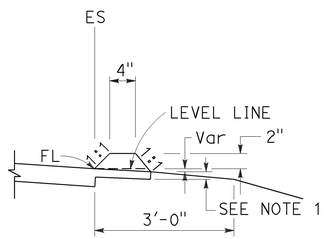

TYPE C

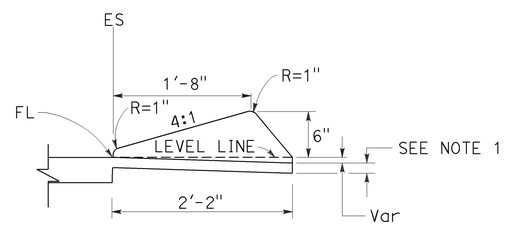

TYPE D

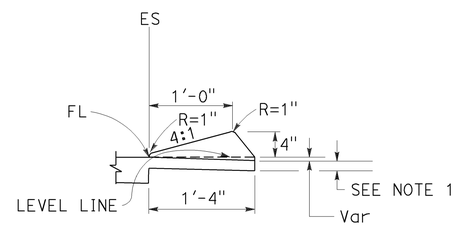

TYPE E

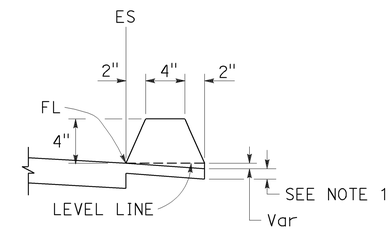

TYPE F
See Note 5

DIKES

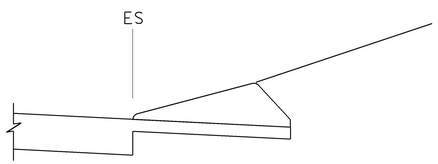

CASE C-1
Cut Slope

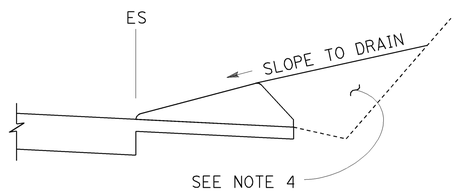

CASE C-2
Cut Slope

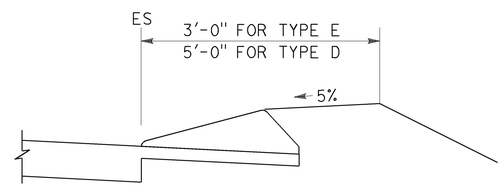

CASE F

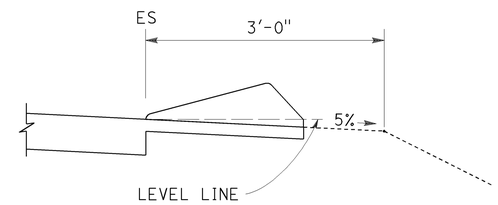

CASE R
See Note 2

TYPE D AND E BACKFILL DETAILS

NOTES:

1. For HMA shoulders only, extend top layer of HMA placed on the shoulder under dike with no joint at the ES. For projects with OGFC shoulders, do not extend OGFC under dike. See project plans for modified dike detail.
2. Case R applies to retrofit only projects where restrictive conditions do not provide enough width for Case F backfill.
3. Type A dike only to be used where restrictive slope conditions do not provide enough width to use Type D or Type E dike.
4. Fill and compact with excavated material to top of dike.
5. Use Type F dike, where dike is required with guard railing installations. See Revised Standard Plan RSP A77N4 for dike positioning details.

DIKE QUANTITIES

TYPE	CUBIC YARDS PER LINEAR FOOT
A	0.0135
C	0.0038
D	0.0293
E	0.0130
F	0.0066

Quantities based on 5% cross slope.

STATE OF CALIFORNIA
DEPARTMENT OF TRANSPORTATION

HOT MIX ASPHALT DIKES

NO SCALE

RSP A87B DATED JULY 19, 2013 SUPERSEDES STANDARD PLAN A87B DATED MAY 20, 2011 - PAGE 120 OF THE STANDARD PLANS BOOK DATED 2010.

REVISED STANDARD PLAN RSP A87B

2010 REVISED STANDARD PLAN RSP A87B

6-27-13

Dist	COUNTY	ROUTE	POST MILES TOTAL PROJECT	SHEET No.	TOTAL SHEETS
03	ED	50	R30.7/R31.7	79	119

REGISTERED CIVIL ENGINEER

July 19, 2013
PLANS APPROVAL DATE

REGISTERED PROFESSIONAL ENGINEER Hector David Cordova No. C41957 Exp. 3-31-14 CIVIL STATE OF CALIFORNIA

THE STATE OF CALIFORNIA OR ITS OFFICERS OR AGENTS SHALL NOT BE RESPONSIBLE FOR THE ACCURACY OR COMPLETENESS OF SCANNED COPIES OF THIS PLAN SHEET.

TO ACCOMPANY PLANS DATED 8-19-13

2010 REVISED STANDARD PLAN RSP A88A

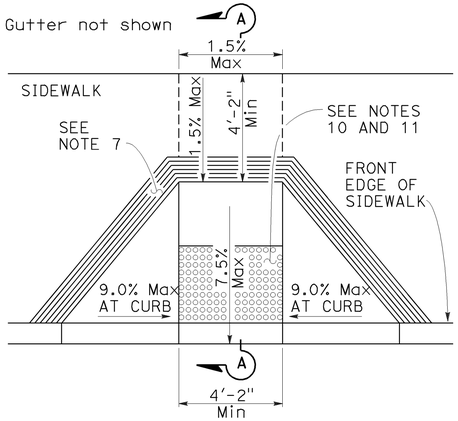

CASE A

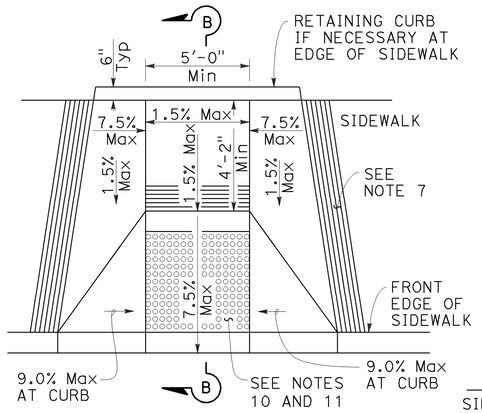

CASE B

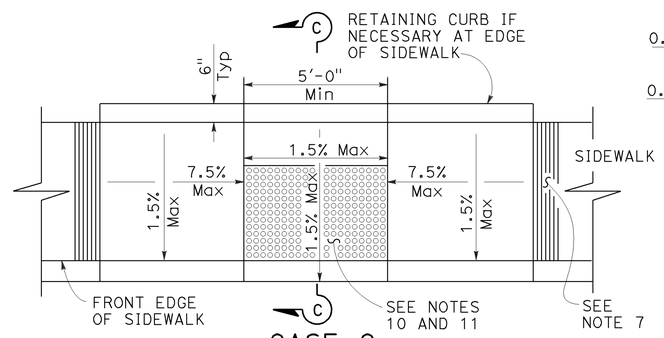

CASE C

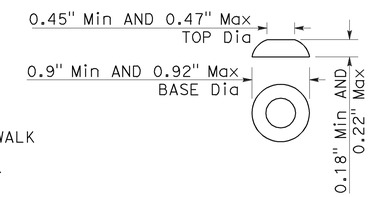

RAISED TRUNCATED DOME

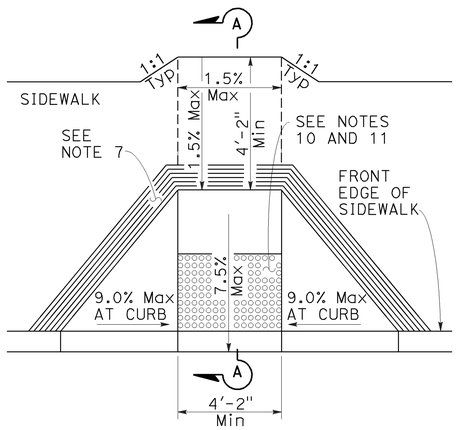

CASE D

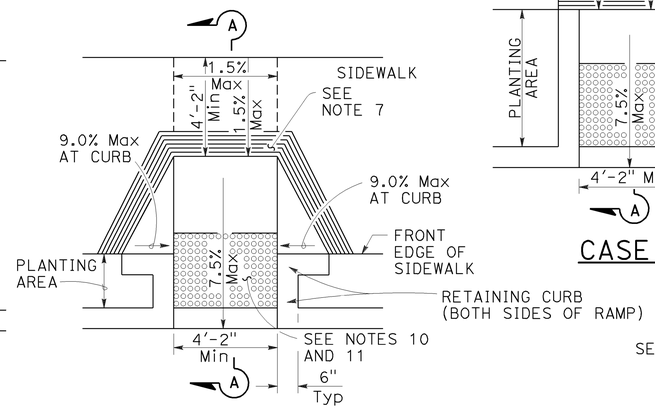

CASE E

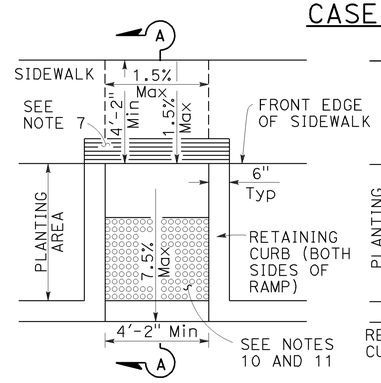

CASE F

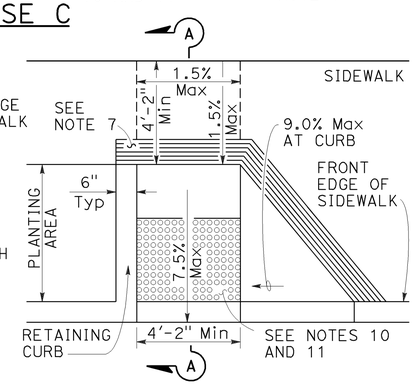

CASE G

See Note 4

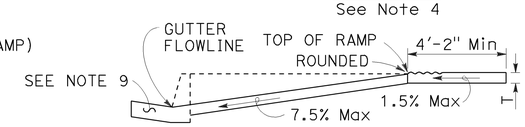

SECTION A-A

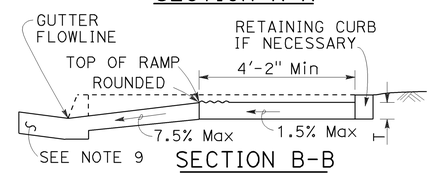

SECTION B-B

Depress entire sidewalk as required

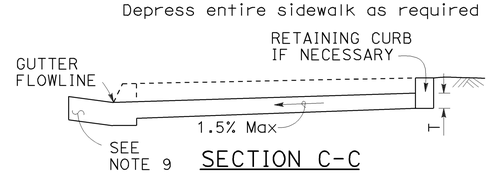

SECTION C-C

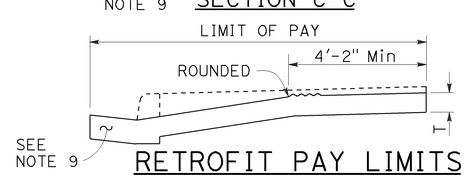

RETROFIT PAY LIMITS

Existing curb and sidewalk

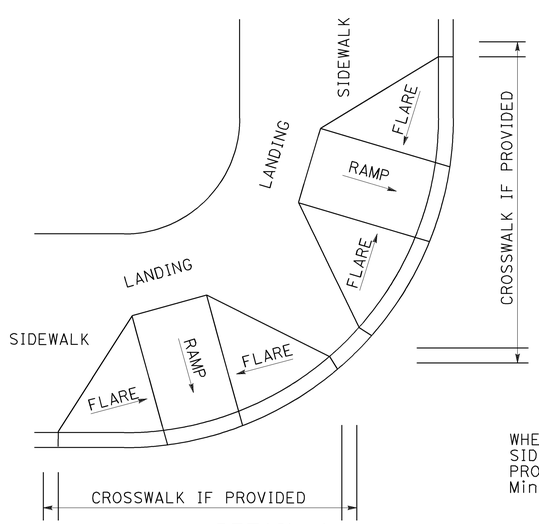

DETAIL A

TYPICAL TWO-RAMP CORNER INSTALLATION

See Note 1

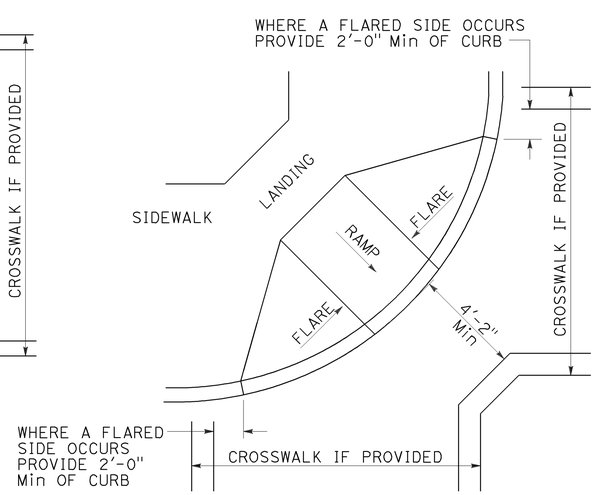

DETAIL B

TYPICAL ONE-RAMP CORNER INSTALLATION

See Notes 1 and 3

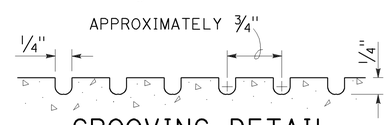

GROOVING DETAIL

NOTES:

1. As site conditions dictate, Case A through Case G curb ramps may be used for corner installations similar to those shown in Detail A and Detail B. The case of curb ramps used in Detail A do not have to be the same. Case A through Case G curb ramps also may be used at mid block locations, as site conditions dictate.
2. If distance from curb to back of sidewalk is too short to accommodate ramp and 4'-2" platform (landing) as shown in Case A, the sidewalk may be depressed longitudinally as in Case B, or C or may be widened as in Case D.
3. When ramp is located in center of curb return, crosswalk configuration must be similar to that shown for Detail B.
4. As site conditions dictate, the retaining curb side and the flared side of the Case G ramp shall be constructed in reversed position.
5. If located on a curve, the sides of the ramp need not be parallel, but the minimum width of the ramp shall be 4'-2".
6. Side slope of ramp flares vary uniformly from a maximum of 9.0% at curb to conform with longitudinal sidewalk slope adjacent to top of the ramp, except in Case C and Case F.
7. The curb ramp shall be outlined, as shown, with a 1'-0" wide border with 1/4" grooves approximately 3/4" on center. See grooving detail.
8. Transitions from ramps and landing to walks, gutters or streets shall be flush (no lip) and free of abrupt changes.
9. Counter slopes of adjoining gutters and road surfaces immediately adjacent to and within 24 inches of the curb ramp shall not be steeper than 1:20 (5.0%). Gutter pan slope shall not exceed 1" of depth for each 2'-0" of width.
10. Curb ramps shall have a detectable warning surface that extends the full width and 3'-0" depth of the ramp. Detectable Warning Surfaces shall conform to the details on this plan and the requirements in the Standard Specifications.
11. The edge of the detectable warning surface nearest the street shall be between 6" and 8" from the gutter flowline.
12. Sidewalk and ramp thickness, "T", shall be 3 1/2" minimum.
13. Utility pull boxes, manholes, vaults and all other utility facilities within the boundaries of the curb ramp will be relocated or adjusted to grade by the owner prior to, or in conjunction with, curb ramp construction.
14. Detectable warning surface may have to be cut to allow removal of utility covers while maintaining full detectable warning width and depth.

RAISED TRUNCATED DOME PATTERN (IN-LINE)

DETECTABLE WARNING SURFACE

See Note 10

STATE OF CALIFORNIA
DEPARTMENT OF TRANSPORTATION

CURB RAMP DETAILS

NO SCALE

RSP A88A DATED JULY 19, 2013 SUPERSEDES STANDARD PLAN A88A
DATED MAY 20, 2011 - PAGE 121 OF THE STANDARD PLANS BOOK DATED 2010.

REVISED STANDARD PLAN RSP A88A

7-8-13

Dist	COUNTY	ROUTE	POST MILES TOTAL PROJECT	SHEET No.	TOTAL SHEETS
03	ED	50	R30.7/R31.7	80	119

REGISTERED CIVIL ENGINEER

July 19, 2013
PLANS APPROVAL DATE

REGISTERED PROFESSIONAL ENGINEER Hector David Cordova No. C41957 Exp. 3-31-14 CIVIL STATE OF CALIFORNIA

THE STATE OF CALIFORNIA OR ITS OFFICERS OR AGENTS SHALL NOT BE RESPONSIBLE FOR THE ACCURACY OR COMPLETENESS OF SCANNED COPIES OF THIS PLAN SHEET.

TO ACCOMPANY PLANS DATED 8-19-13

Gutter not shown

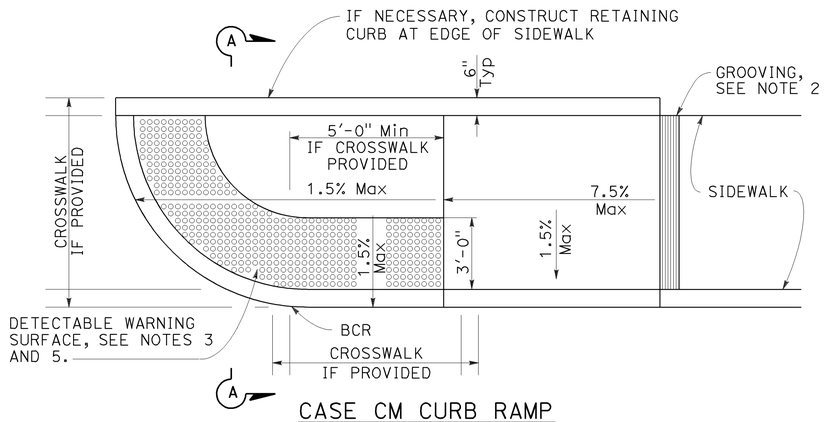

CASE CM CURB RAMP

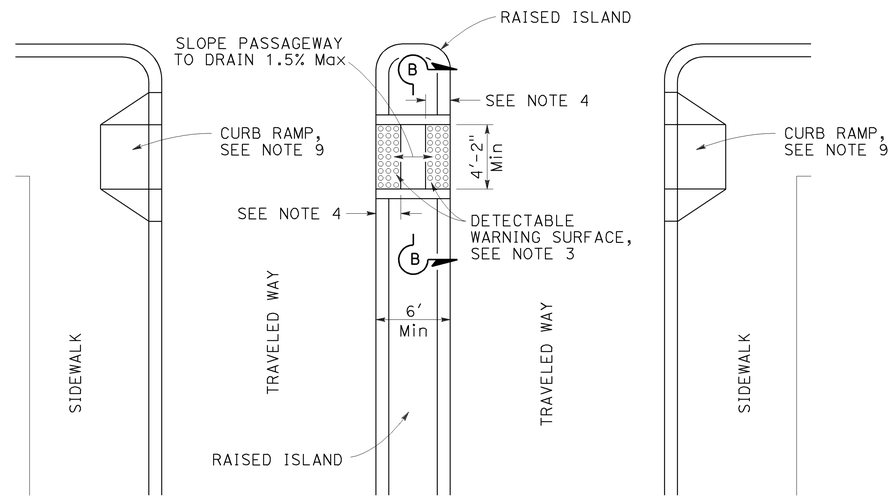

TYPE A PASSAGEWAY

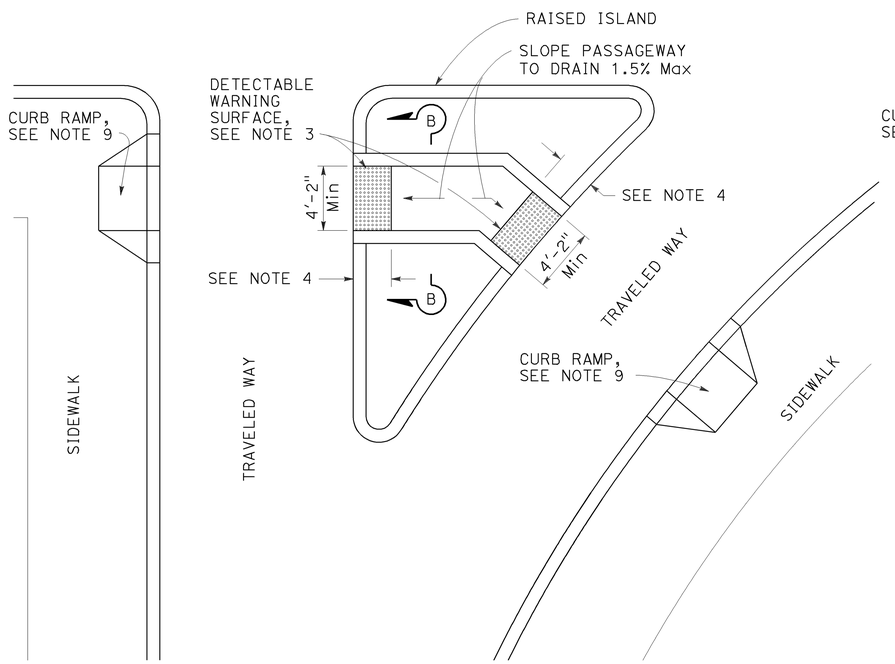

TYPE B PASSAGEWAY

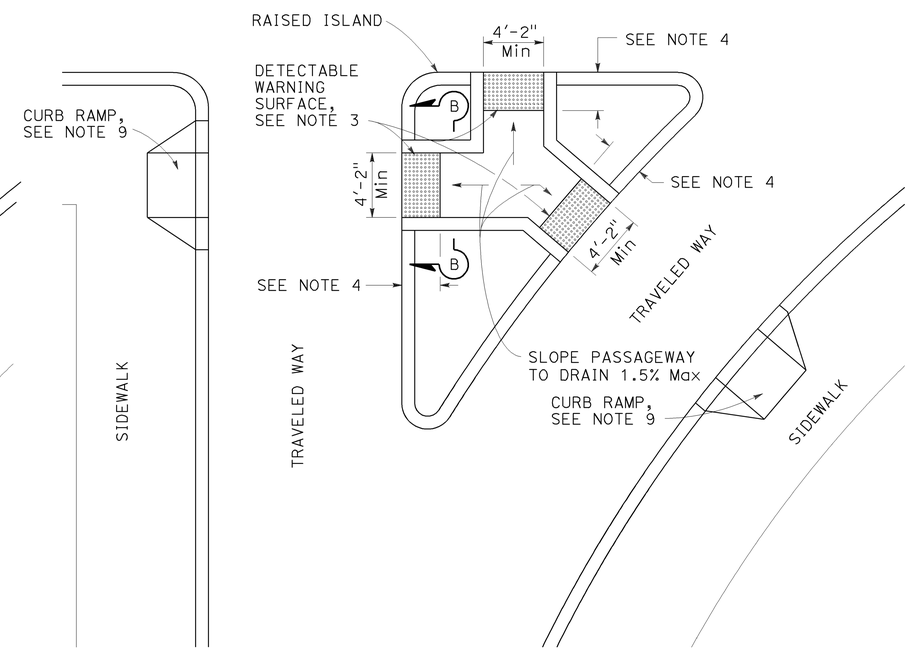

TYPE C PASSAGEWAY

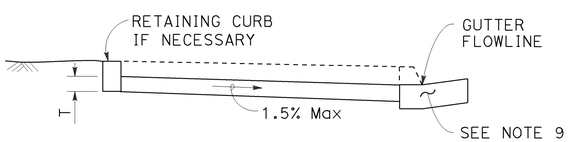

SECTION A-A

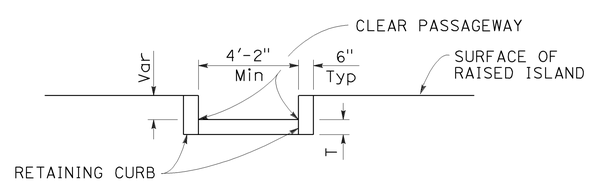

SECTION B-B

NOTES:

1. Sidewalk, ramp and passageway thickness, "T", shall be 3½" minimum.
2. For details of grooving used with Case CM curb ramp, see Revised Standard Plan RSP A88A.
3. For details of detectable warning surfaces, see Revised Standard Plan RSP A88A.
4. Where an island passageway length is greater than or equal to 6'-0", but less than 8'-0", each detectable warning surface shall extend the full width and 2'-0" depth of the passageway length. Where an island passageway length is greater than or equal to 8'-0", each detectable warning surface shall extend the full width and 3'-0" depth of the passageway length.
5. For Case CM curb ramp, the edge of the detectable warning surface nearest the street shall be between 6" and 8" from the gutter flowline.
6. Transitions from ramps to walks, gutters or streets shall be flush (no lip) and free of abrupt changes.
7. Utility pull boxes, manholes, vaults and all other utility facilities within the boundaries of the curb ramp will be relocated or adjusted to grade by the owner prior to, or in conjunction with, curb ramp construction.
8. Detectable warning surface may have to be cut to allow removal of utility covers while maintaining full detectable warning width and depth.
9. For additional curb ramp details, see Revised Standard Plan RSP A88A.

STATE OF CALIFORNIA
DEPARTMENT OF TRANSPORTATION

CURB RAMP AND ISLAND PASSAGEWAY DETAILS

NO SCALE

RSP A88B DATED JULY 19, 2013 SUPERSEDES STANDARD PLAN A88B DATED MAY 20, 2011 - PAGE 122 OF THE STANDARD PLANS BOOK DATED 2010.

REVISED STANDARD PLAN RSP A88B

2010 REVISED STANDARD PLAN RSP A88B

6-25-13

TO ACCOMPANY PLANS DATED _____

Dist	COUNTY	ROUTE	POST MILES TOTAL PROJECT	SHEET No.	TOTAL SHEETS
03	ED	50	R30.7/R31.7	81	119

REGISTERED CIVIL ENGINEER

October 19, 2012
PLANS APPROVAL DATE

REGISTERED PROFESSIONAL ENGINEER Glenn DeCou No. C34547 Exp. 9-30-13 CIVIL STATE OF CALIFORNIA

THE STATE OF CALIFORNIA OR ITS OFFICERS OR AGENTS SHALL NOT BE RESPONSIBLE FOR THE ACCURACY OR COMPLETENESS OF SCANNED COPIES OF THIS PLAN SHEET.

8-19-13

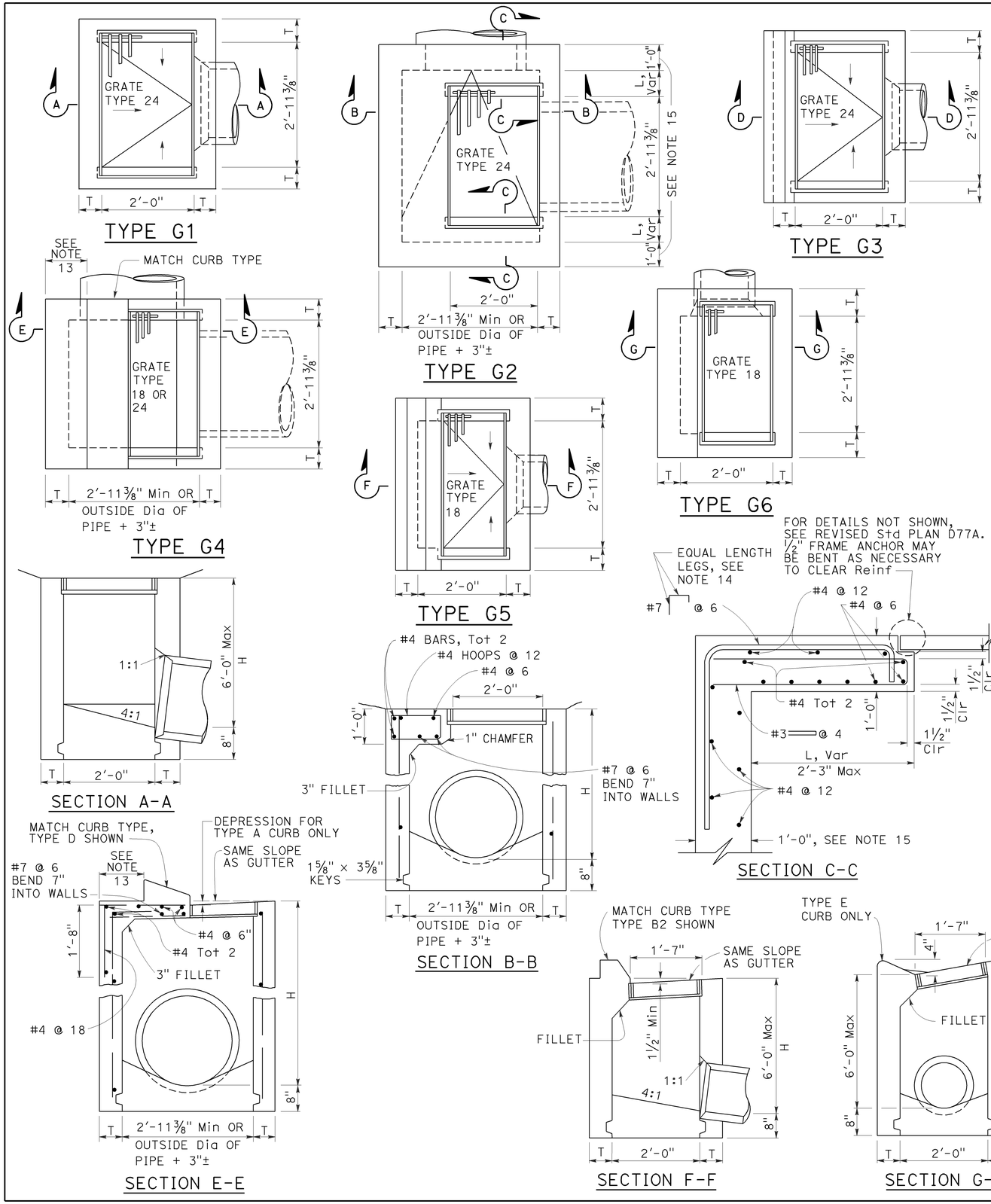

NOTES:

1. "H" is the difference in elevation between the outlet pipe flow line and the normal gutter grade line undepressed.
2. For "T" wall thickness, see Table A below.
3. Wall reinforcing not required when "H" is 8'-0" or less and the unsupported width or length is 7'-0" or less. Walls exceeding these limits shall be reinforced with #4 bars @ 1'-6" ± centers placed 1½" clear to inside of box unless otherwise shown.
4. Inlet bottom reinforcing not required. See Standard Plan D74C for alternative reinforced bottom and alternative half round bottom.
5. Steps-None required where "H" is less than 2'-6". Where "H" is 2'-6" or more, install steps with lowest rung 1'-0" above the floor and highest rung not more than 6" below top of inlet. The distance between steps shall not exceed 1'-0" and shall be uniform throughout the length of the wall. Place steps in the wall without an opening. Steps inserts may be substituted for the bar steps. Step inserts shall comply with State Industrial Safety requirements. See Standard Plan D74C for step details.
6. Details shown apply to both metal and concrete pipe.
7. Pipe(s) can be placed in any wall.
8. Curb section shall match adjacent curb.
9. Basin floors shall have wood trowel finish and a minimum slope of 12:3 from all directions toward outlet pipe.
10. Set inlet so that grate bars are parallel to direction of principal surface flow.
11. See Revised Standard Plans D77A and D77B for grate and frame details and weights of miscellaneous iron and steel.
12. See Standard Plan D78A for gutter depression details.
13. This dimenison will vary with different grates, curbs types, box width and wall thickness.
14. Bar may be rotated as necessary to clear opening. Where "L" is 6" or less, bar may be omitted.
15. Where "L" is 6" or less, wall thickness shall be as shown in Table A.
16. Cast-in-place inlets to be formed around all pipes/stubs intersecting the inlet, and concrete poured in one continuous operation. Precast inlets shall have mortared connections conforming to details for Type GCP Inlet shown on Standard Plan D75B. See Standard Specifications for mortar composition.

TABLE A

CONCRETE QUANTITIES				
TYPE	H=3'-0" TO 8'-0" (T=6")		H=8'-1" TO 20'-0" (T=8")	
	H=3'-0" (CY)	ADDITIONAL PCC PER FOOT (CY)	H=8'-1" (CY)	ADDITIONAL PCC PER FOOT (CY)
G-1	0.95	0.220	See Note A	SEE NOTE A
G-2*	1.31	0.255	3.50	0.357
G-3	1.03	0.220	See Note A	SEE NOTE A
G-4* (TYPE 24)	1.27	0.255	3.48	0.357
G-4* (TYPE 18)	1.30	0.255	3.50	0.357
G-5	1.02	0.220	SEE NOTE A	SEE NOTE A
G-6	1.04	0.220	SEE NOTE A	SEE NOTE A

TABLE BASED ON 8" FLOOR SLAB. NO DEDUCTIONS ARE TO BE MADE TO THESE QUANTITIES BECAUSE OF PIPE OPENINGS, DIFFERENT FLOOR ALTERNATIVES OR DIFFERENT CURB TYPES. * QUANTITIES FOR TYPE G-2 AND G-4 INLETS BASED ON THE MINIMUM INTERIOR DIMENSIONS.

NOTE A:

Maximum allowable height 6'-0".

STATE OF CALIFORNIA
DEPARTMENT OF TRANSPORTATION

DRAINAGE INLETS

NO SCALE

RSP D73 DATED OCTOBER 19, 2012 SUPERSEDES STANDARD PLAN D73 DATED MAY 20, 2011 - PAGE 156 OF THE STANDARD PLANS BOOK DATED 2010.

REVISED STANDARD PLAN RSP D73

2010 REVISED STANDARD PLAN RSP D73

7-19-12

Dist	COUNTY	ROUTE	POST MILES TOTAL PROJECT	SHEET No.	TOTAL SHEETS
03	ED	50	R30.7/R31.7	82	119

LICENSED LANDSCAPE ARCHITECT

July 19, 2013
PLANS APPROVAL DATE

THE STATE OF CALIFORNIA OR ITS OFFICERS OR AGENTS SHALL NOT BE RESPONSIBLE FOR THE ACCURACY OR COMPLETENESS OF SCANNED COPIES OF THIS PLAN SHEET.

LICENSED LANDSCAPE ARCHITECT — Gregory A. Balzer 2576 — 6-28-13 Expiration Date — 2-28-15 Renewal Date — 7-19-13 Date — STATE OF CALIFORNIA

TO ACCOMPANY PLANS DATED 8-19-13

2010 REVISED STANDARD PLAN RSP H1

A

AB	AGGREGATE BASE
ABS	ACRYLONITRILE-BUTADIENE-STYRENE
AC	ASPHALT CONCRETE
ACC	ARMOR-CLAD CONDUCTORS
Adj	ADJACENT/ADJUSTABLE
AIC	AUXILIARY IRRIGATION CONTROLLER
Alt	ALTERNATIVE
AMEND	AMENDMENT
ARV	AIR RELEASE VALVE
AUTO	AUTOMATIC
AUX	AUXILIARY
AVB	ATMOSPHERIC VACUUM BREAKER

B

B&B	BALLED AND BURLAPPED
B/B	BRASS/BRONZE
B/B/PL	BRASS/BRONZE/PLASTIC
B/PL	BRASS/PLASTIC
BFM	BONDED FIBER MATRIX
Bit Ctd	BITUMINOUS COATED
BP	BOOSTER PUMP
BPA	BACKFLOW PREVENTER ASSEMBLY
BPE	BACKFLOW PREVENTER ENCLOSURE
BV	BALL VALVE

C

C	CONDUIT
CAP	CORRUGATED ALUMINUM PIPE
CARV	COMBINATION AIR RELEASE VALVE
CB	COUPLING BAND
CCA	CAM COUPLER ASSEMBLY
CEC	CONTROLLER ENCLOSURE CABINET
CHDPE	CORRUGATED HIGH DENSITY POLYETHYLENE
CL	CHAIN LINK
CNC	CONTROL AND NEUTRAL CONDUCTORS
Conc	CONCRETE
CP	COPPER PIPE
CS	COMPOST SOCK
CSP	CORRUGATED STEEL PIPE
CST	CENTER STRIP
CV	CHECK VALVE

D

Dia	DIAMETER
DIP	DUCTILE IRON PIPE
DIT	DRIP IRRIGATION TUBING
DG	DECOMPOSED GRANITE
DN	DIAMETER NOMINAL
DVA	DRIP VALVE ASSEMBLY

E

EC	EROSION CONTROL
ECTC	EROSION CONTROL TECHNOLOGY COUNCIL
Elect	ELECTRIC/ELECTRICAL
Elev	ELEVATION
ELL	ELBOW
ENCL	ENCLOSURE
EP	EDGE OF PAVEMENT
ES	EDGE OF SHOULDER
EST	END STRIP
ESTB	ESTABLISHMENT
ETW	EDGE OF TRAVELED WAY

F

F	FULL CIRCLE
F/P	FULL/PART CIRCLE
FCV	FLOW CONTROL VALVE
FERT	FERTILIZER
FG	FINISHED GRADE
FH	FLEXIBLE HOSE
FIPT	FEMALE IRON PIPE THREAD
FIS	FERTILIZER INJECTOR SYSTEM
FL	FLOW LINE
FR	FIBER ROLL
FS	FLOW SENSOR
FSC	FLOW SENSOR CABLE
FV	FLUSH VALVE

G

Galv	GALVANIZED
GARV	GARDEN VALVE
GARVA	GARDEN VALVE ASSEMBLY
GM	GRAVEL MULCH
GPH	GALLONS PER HOUR
GPM	GALLONS PER MINUTE
GSP	GALVANIZED STEEL PIPE
GV	GATE VALVE

H

H	HALF CIRCLE
HDPE	HIGH DENSITY POLYETHYLENE
HP	HORSEPOWER/HINGE POINT
HPL	HIGH PRESSURE LINE
Hwy	HIGHWAY

I

IC	IRRIGATION CONTROLLER
ICC	IRRIGATION CONTROLLER(S) IN CONTROLLER ENCLOSURE CABINET
ID	INSIDE DIAMETER
IFS	IRRIGATION FILTRATION SYSTEM
IPS	IRON PIPE SIZE
IPT	IRON PIPE THREAD
Irr	IRRIGATION

L

L	LENGTH

M

Max	MAXIMUM
MBGR	METAL BEAM GUARD RAILING
MCV	MANUAL CONTROL VALVE
MIC	MASTER IRRIGATION CONTROLLER
Min	MINIMUM
MIPT	MALE IRON PIPE THREAD
Misc	MISCELLANEOUS
Mtl	MATERIAL
MVP	MAINTENANCE VEHICLE PULLOUT

N

NCN	NO COMMON NAME
NL	NOZZLE LINE
No.	NUMBER
NPT	NATIONAL PIPE THREAD

O

O/C	ON CENTER
OD	OUTSIDE DIAMETER
OL	OVERLAP

P

P	PART CIRCLE
PB	PULL BOX
PCC	PORTLAND CEMENT CONCRETE
PE	POLYETHYLENE
Pkt	PACKET
PL	PLASTIC
PLS	PURE LIVE SEED
PLT	PLANT/PLANTING
PLT ESTB	PLANT ESTABLISHMENT
PM	POST MILE
PR	PRESSURE RATED
PRLV	PRESSURE RELIEF VALVE
PRV	PRESSURE REGULATING VALVE
PVC	POLYVINYL CHLORIDE
Pvmt	PAVEMENT

Q

Q	QUARTER CIRCLE
QCV	QUICK COUPLING VALVE

R

R	RADIUS
RCP	REINFORCED CONCRETE PIPE
RCV	REMOTE CONTROL VALVE
RCVM	REMOTE CONTROL VALVE (MASTER)
RCVMF	REMOTE CONTROL VALVE (MASTER) W/FLOW SENSOR
RCVP	REMOTE CONTROL VALVE W/PRESSURE REGULATOR
RCW	RECYCLED WATER
RECP	ROLLED EROSION CONTROL PRODUCT
REQ	REQUIRED
RICS	REMOTE IRRIGATION CONTROL SYSTEM
R/W	RIGHT OF WAY

S

S	SLIP
SCH	SCHEDULE
SF	STATE-FURNISHED
Shld	SHOULDER
Sq	SQUARE
SST	SIDE STRIP
Sta	STATION
Std	STANDARD
SW	SIDEWALK/SOUND WALL

T

T	THIRD CIRCLE/THREAD
TLS	TRUCK LOADING STANDPIPE
TQ	THREE QUARTER CIRCLE
TRM	TURF REINFORCEMENT MAT
TT	TWO-THIRDS CIRCLE
TWSA	TREE WELL SPRINKLER ASSEMBLY
Typ	TYPICAL

U

UG	UNDERGROUND

W

W	WIDTH
W/	WITH
WM	WATER METER
WS	WYE STRAINER
WSA	WYE STRAINER ASSEMBLY
WSP	WELDED STEEL PIPE
WWM	WELDED WIRE MESH

NOTE:
For additional abbreviations, see Standard Plans A10A and A10B.

STATE OF CALIFORNIA
DEPARTMENT OF TRANSPORTATION

LANDSCAPE AND EROSION CONTROL ABBREVIATIONS

NO SCALE

RSP H1 DATED JULY 19, 2013 SUPERSEDES STANDARD PLAN H1 DATED MAY 20, 2011 - PAGE 218 OF THE STANDARD PLANS BOOK DATED 2010.

REVISED STANDARD PLAN RSP H1

6-28-13

TO ACCOMPANY PLANS DATED 8-19-13

Dist	COUNTY	ROUTE	POST MILES TOTAL PROJECT	SHEET No.	TOTAL SHEETS
03	ED	50	R30.7/R31.7	83	119

REGISTERED CIVIL ENGINEER

April 19, 2013
PLANS APPROVAL DATE

REGISTERED PROFESSIONAL ENGINEER Gurinderpal Bhullar No. C48815 Exp. 9-30-14 CIVIL STATE OF CALIFORNIA

THE STATE OF CALIFORNIA OR ITS OFFICERS OR AGENTS SHALL NOT BE RESPONSIBLE FOR THE ACCURACY OR COMPLETENESS OF SCANNED COPIES OF THIS PLAN SHEET.

NOTES:

See Revised Standard Plan RSP T9 for tables.

Use cone spacing X for taper segment, Y for tangent segment or Z for conflict situations, as approriate, per Table 1, unless X, Y, or Z cone spacing is shown on this sheet.

Unless otherwise specified in the special provisions, all temporary warning signs shall have black legend on fluorescent orange background.

California codes are designated by (CA). Otherwise, Federal (MUTCD) codes are shown.

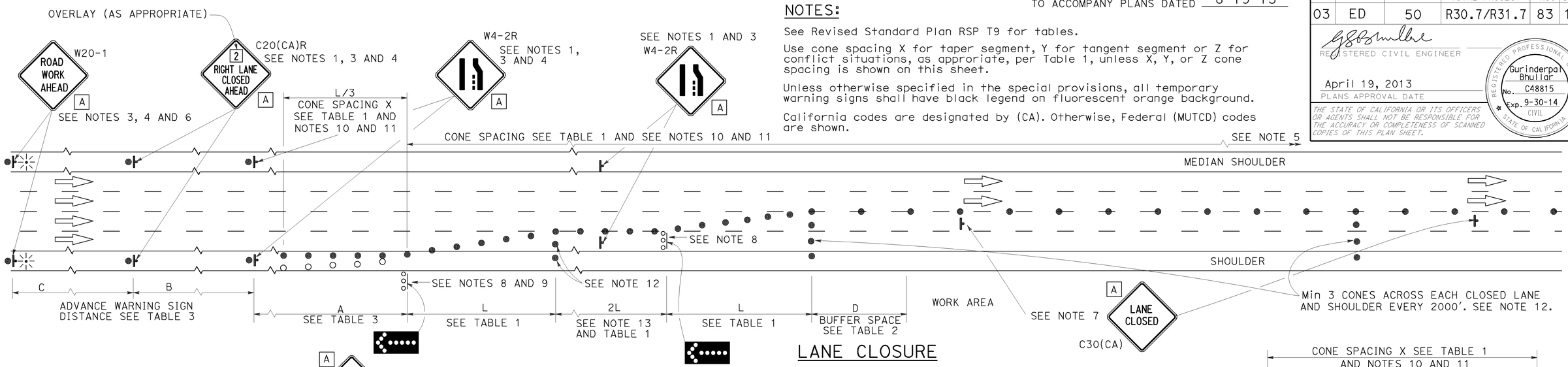

LANE CLOSURE

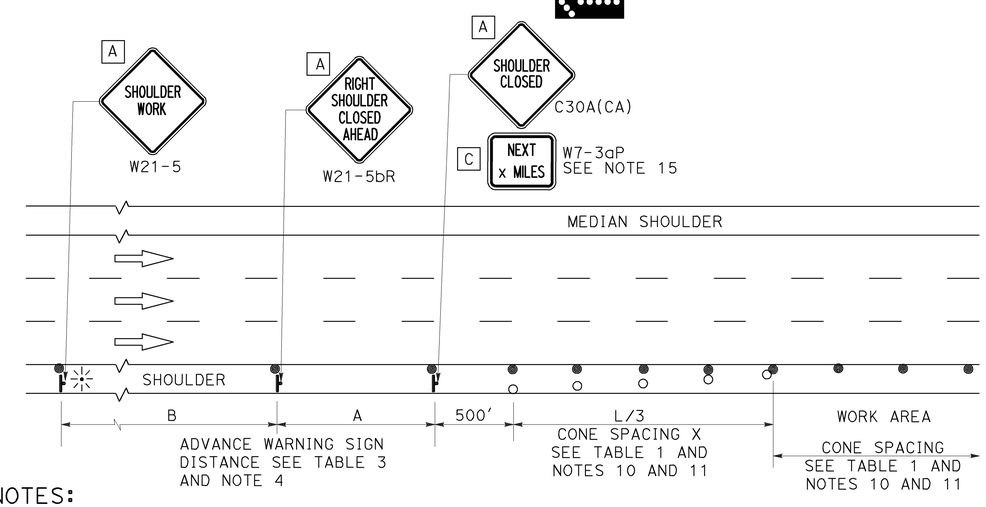

SHOULDER CLOSURE

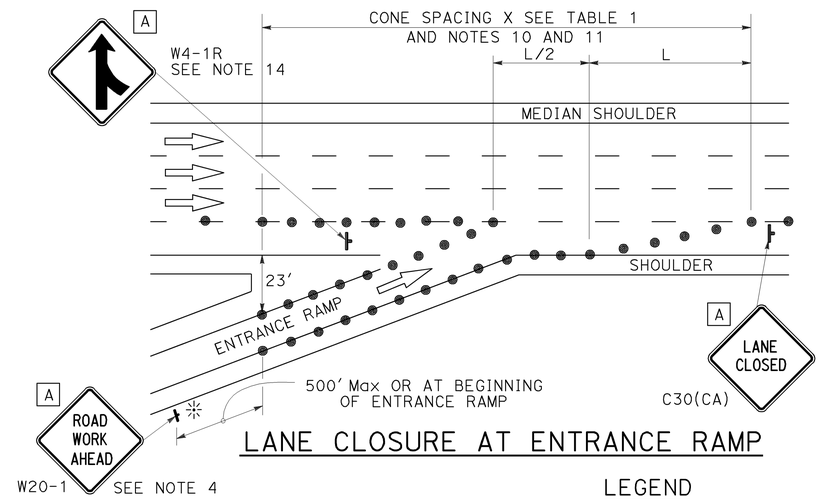

LANE CLOSURE AT ENTRANCE RAMP

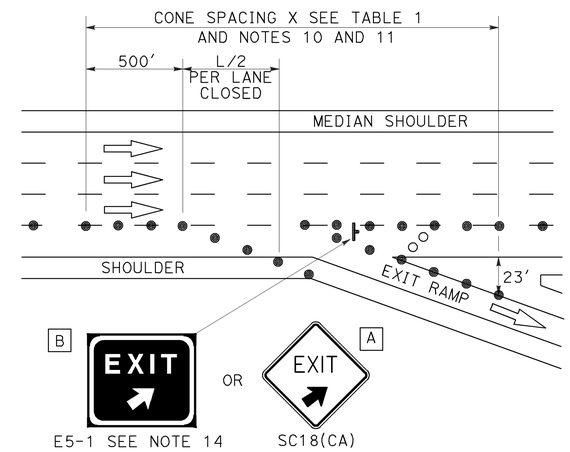

LANE CLOSURE AT EXIT RAMP

NOTES:

1. Median lane closures shall conform to the details as shown except that C20(CA)L and W4-2L signs shall be used.
2. At least one person shall be assigned to provide full time maintenance of traffic control devices for lane closures.
3. Duplicate sign installations are not required:
   a) On opposite shoulder if at least one-half of the available lanes remain open to traffic.
   b) In the median if the width of the median shoulder is less than 8' and the outside lanes are to be closed.
4. Each advance warning sign on each side of the roadway shall be equipped with at least two flags for daytime closure. Each flag shall be at least 16" x 16" in size and shall be orange or fluorescent red-orange in color. Flashing beacons shall be placed at the locations indicated for lane closure during hours of darkness.
5. A G20-2 "END ROAD WORK" sign, with minimum size of 48" x 24" as appropriate, shall be placed at the end of the lane closure unless the end of work area is obvious or ends within a larger project's limits.
6. If the W20-1 sign would follow within 2000' of a stationary W20-1 or G20-1 "ROAD WORK NEXT _____ MILES", use a C20(CA) sign for the first advance warning sign.
7. Place a C30(CA) sign every 2000' throughout length of lane closure.
8. One flashing arrow sign for each lane closed. The flashing arrow signs shall be Type I.
9. A minimum 1500' of sight distance shall be provided where possible for vehicles approaching the first flashing arrow sign. Lane closures shall not begin at top of crest vertical curve or on a horizontal curve.
10. All cones used for lane closures during the hours of darkness shall be fitted with retroreflective bands (or sleeves) as specified in the specifications.
11. Portable delineators, placed at one-half the spacing indicated for traffic cones may be used instead of cones for daytime closures only.
12. Unless otherwise specified in the special provisions, a minimum of 3 cones shall be placed transversely across each closed lane and shoulder at each location where a taper across a traffic lane ends and every 2000' as shown on the "Lane Closure" detail. Two Type II barricades may be used instead of the 3 cones. The transverse alignment of the cones or barricades on the closed shoulder may be shifted from the transverse alignment to provide access to the work.
13. Unless otherwise specified in the special provisions, the 2L tangent shown along lane lines shall be used between the L tapers required for each closed traffic lane.
14. Unless otherwise specified in the special provisions, the E5-1 or SC18(CA) and W4-1 signs shall be used as shown.
15. A W7-3aP "NEXT____ MILES" plaque must be used if theshoulder closure extends beyond the distance that can be perceived by road users.

LEGEND

- TRAFFIC CONE
- TRAFFIC CONE (OPTIONAL TAPER)
- TEMPORARY TRAFFIC CONTROL SIGN
- FLASHING ARROW SIGN (FAS)
- FAS SUPPORT OR TRAILER
- PORTABLE FLASHING BEACON

SIGN PANEL SIZE (Min)

A	48" x 48"
B	72" x 60"
C	36" x 30"

STATE OF CALIFORNIA
DEPARTMENT OF TRANSPORTATION

TRAFFIC CONTROL SYSTEM FOR LANE CLOSURE ON FREEWAYS AND EXPRESSWAYS

NO SCALE

RSP T10 DATED APRIL 19, 2013 SUPERSEDES STANDARD PLAN T10 DATED MAY 20, 2011 - PAGE 237 OF THE STANDARD PLANS BOOK DATED 2010.

REVISED STANDARD PLAN RSP T10

2010 REVISED STANDARD PLAN RSP T10

12-18-12

Dist	COUNTY	ROUTE	POST MILES TOTAL PROJECT	SHEET No.	TOTAL SHEETS
03	ED	50	R30.7/R31.7	84	119

REGISTERED CIVIL ENGINEER

April 19, 2013
PLANS APPROVAL DATE

REGISTERED PROFESSIONAL ENGINEER
Gurinderpal Bhullar
No. C48815
Exp. 9-30-14
CIVIL
STATE OF CALIFORNIA

THE STATE OF CALIFORNIA OR ITS OFFICERS OR AGENTS SHALL NOT BE RESPONSIBLE FOR THE ACCURACY OR COMPLETENESS OF SCANNED COPIES OF THIS PLAN SHEET.

TO ACCOMPANY PLANS DATED 8-19-13

NOTES:

See Revised Standard Plan RSP T9 for tables.

Use cone spacing X for taper segment, Y for tangent segment or Z for conflict situations, as approriate, per Table 1, unless X, Y, or Z cone spacing is shown on this sheet.

Unless otherwise specified in the special provisions, all temporary warning signs shall have black legend on fluorescent orange background.

California codes are designated by (CA). Otherwise, Federal (MUTCD) codes are shown.

TYPICAL LANE CLOSURE WITH REVERSIBLE CONTROL

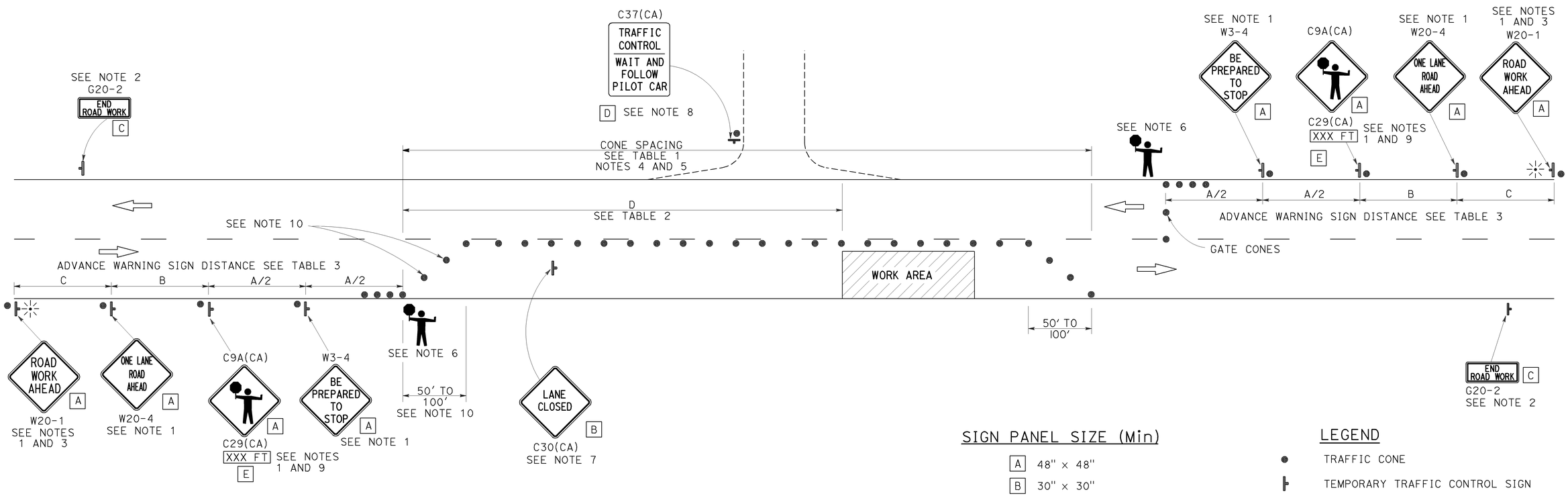

SIGN PANEL SIZE (Min)

A	48" × 48"
B	30" × 30"
C	36" × 18"
D	36" × 42"
E	20" × 7"

LEGEND

- TRAFFIC CONE
- TEMPORARY TRAFFIC CONTROL SIGN
- PORTABLE FLASHING BEACON
- FLAGGER

NOTES:

1. Each advance warning sign in each direction of travel shall be equipped with at least two flags for daytime closure. Each flag shall be at least 16" x 16" in size and shall be orange or fluorescent red-orange in color. Flashing beacons shall be placed at the locations indicated for lane closure during hours of darkness.
2. A G20-2 "END ROAD WORK" sign, as appropriate, shall be placed at the end of the lane control unless the end of work area is obvious, or ends within a larger project's limits.
3. If the W20-1 sign would follow within 2000' of a stationary W20-1 or G20-1 "ROAD WORK NEXT _____ MILES", use a W20-4 sign for the first advance warning sign.
4. All cones used for lane closures during the hours of darkness shall be fitted with retroreflective bands (or sleeves) as specified in the specifications.
5. Portable delineators, placed at one-half the spacing indicated for traffic cones, may be used instead of cones for daytime closures only.
6. Additional advance flaggers may be required. Flagger should stand in a conspicuous place, be visible to approaching traffic as well as approaching vehicles after the first vehicle has stopped. During the hours of darkness, the flagging-station and flagger shall be illuminated and clearly visible to approaching traffic. The illumination footprint of the lighting on the ground shall be at least 20' in diameter. Place a minimum of four cones at 50' intervals in advance of flagger station as shown.
7. Place C30(CA) "LANE CLOSED" sign at 500' to 1000' intervals throughout extended work areas. They are optional if the work area is visible from the flagger station.
8. When a pilot car is used, place a C37(CA) "TRAFFIC CONTROL-WAIT AND FOLLOW PILOT CAR" sign with black legend on white background at all intersections, driveways and alleys without a flagger within traffic control area. Signs shall be clean and visible at all times. Where traffic can not be effectively self-regulated, at least one flagger shall be used at each intersection within traffic control area.
9. An optional C29(CA) sign may be placed below the C9A(CA) sign.
10. Either traffic cones or barricades shall be placed on the taper. Barricades shall be Type I, II, or III.

STATE OF CALIFORNIA
DEPARTMENT OF TRANSPORTATION

TRAFFIC CONTROL SYSTEM FOR LANE CLOSURE ON TWO LANE CONVENTIONAL HIGHWAYS

NO SCALE

RSP T13 DATED APRIL 19, 2013 SUPERSEDES STANDARD PLAN T13 DATED MAY 20, 2011 - PAGE 241 OF THE STANDARD PLANS BOOK DATED 2010.

REVISED STANDARD PLAN RSP T13

2010 REVISED STANDARD PLAN RSP T13

4-2-13

Dist	COUNTY	ROUTE	POST MILES TOTAL PROJECT	SHEET No.	TOTAL SHEETS
03	ED	50	R30.7/R31.7	85	119

Gary Wang
REGISTERED CIVIL ENGINEER

April 20, 2012
PLANS APPROVAL DATE

REGISTERED PROFESSIONAL ENGINEER
Gary Wang
No. C58298
Exp. 6-30-12
CIVIL
STATE OF CALIFORNIA

THE STATE OF CALIFORNIA OR ITS OFFICERS OR AGENTS SHALL NOT BE RESPONSIBLE FOR THE ACCURACY OR COMPLETENESS OF SCANNED COPIES OF THIS PLAN SHEET.

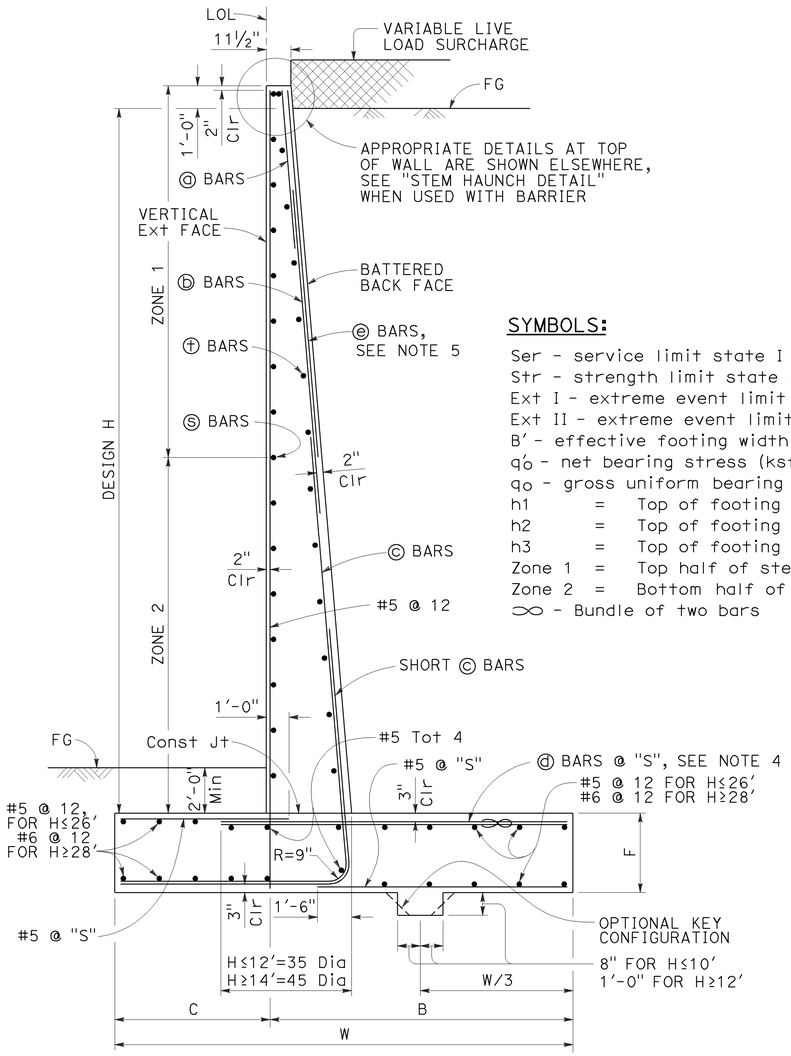

TYPICAL SECTION

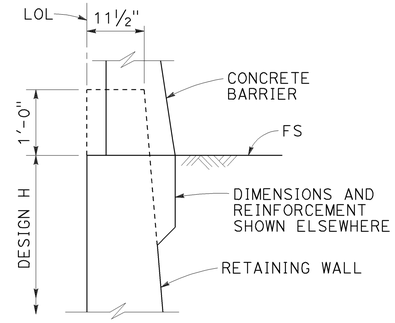

STEM HAUNCH DETAIL

SYMBOLS:

Ser - service limit state I
Str - strength limit state I
Ext I - extreme event limit state I
Ext II - extreme event limit state II
B' - effective footing width (ft)
q_o' - net bearing stress (ksf), OG assumed to be FG at toe
q_o - gross uniform bearing stress (ksf)
h1 = Top of footing to top of short ⓒ bar
h2 = Top of footing to top of ⓒ bar
h3 = Top of footing to top of ⓑ bar
Zone 1 = Top half of stem height
Zone 2 = Bottom half of stem height
∞ - Bundle of two bars

DESIGN CONDITIONS:

Design H may be exceeded by 6" before going to the next size. Special footing design is required where foundation material is incapable of supporting bearing stress listed in the table.

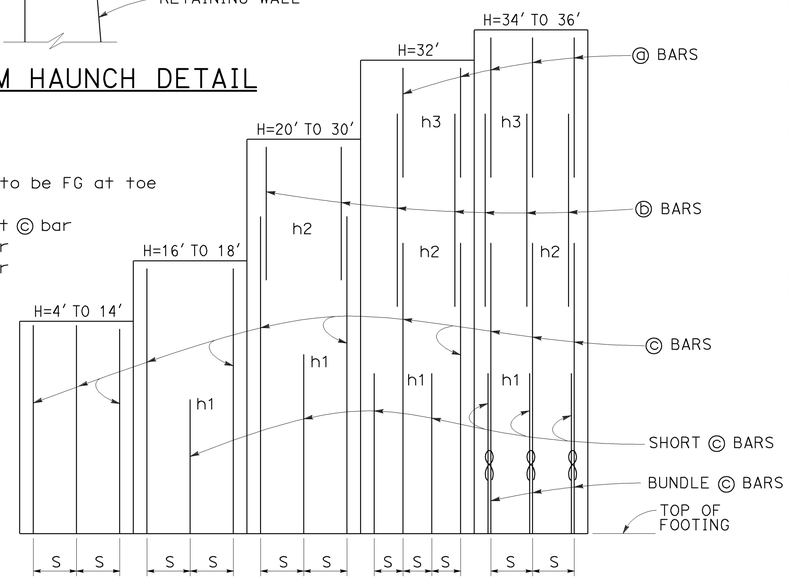

ELEVATION

DESIGN NOTES:

TO ACCOMPANY PLANS DATED 8-19-13

DESIGN: AASHTO LRFD Bridge Design Specifications, 4th Edition with California Amendments

LS: Varied surcharge on level ground surface

DC: Stem Architectural Treatment of thickness up to 6" of concrete (75 psf) considered

CT: 54 kip transverse force applied at He = 32", distributed over 10 feet at the top of wall and 1 : 1 distribution down and outward. Distribution below footing taken no less than 40'.

SEISMIC: $k_h = 0.2$, $k_v = 0.0$

SOIL: $\phi = 34°$, $\gamma = 120$ pcf

REINFORCED CONCRETE: f'c = 3,600 psi
fy = 60,000 psi

LOAD COMBINATIONS AND LIMIT STATES:

Service I	$Q = 1.00DC+1.00EV+1.00EH+1.00LS$
Strength I	$Q = \alpha DC+\beta EV+\eta EH+1.75LS$
Extreme I	$Q = 1.00DC+1.00EV+1.00EH+1.00EQD+1.00EQE$
Extreme II	$Q = 1.00DC+1.00EV+1.00EH+1.00CT$

Where:

Q:	Force Effects
α:	1.25 or 0.90, Whichever Controls Design
β:	1.35 or 1.00, Whichever Controls Design
η:	1.50 or 0.90, Whichever Controls Design
DC:	Dead Load of Structure Components
EH:	Horizontal Earth Fill Pressure
EV:	Vertical Earth Pressure from Earth Fill Weight
LS:	Live Load Surcharge
EQE:	Seismic Earth Pressure
EQD:	Soil and Structural and Nonstructural Components Inertia
CT:	Vehicular Collision Force

TABLE OF REINFORCING STEEL, DIMENSIONS AND DATA

DESIGN H	4'	6'	8'	10'	12'	14'	16'	18'	20'	22'	24'	26'	28'	30'	32'	34'	36'
W	6'-10"	7'-0"	7'-3"	7'-7"	8'-4"	9'-7"	10'-9"	12'-0"	13'-3"	14'-6"	15'-9"	17'-1"	18'-5"	19'-10"	21'-2"	22'-7"	24'-0"
C	2'-2"	2'-3"	2'-3"	2'-4"	2'-6"	3'-0"	3'-6"	4'-0"	4'-6"	5'-0"	5'-5"	6'-0"	6'-6"	7'-2"	7'-8"	8'-2"	9'-0"
B	4'-8"	4'-9"	5'-0"	5'-3"	5'-10"	6'-7"	7'-3"	8'-0"	8'-9"	9'-6"	10'-4"	11'-1"	11'-11"	12'-8"	13'-6"	14'-5"	15'-0"
F	1'-4"	1'-4"	1'-4"	1'-4"	1'-6"	1'-8"	1'-8"	1'-9"	1'-9"	1'-11"	2'-2"	2'-5"	2'-10"	3'-3"	3'-6"	4'-0"	4'-3"
BATTER	½: 12	½: 12	½: 12	½: 12	½: 12	½: 12	½: 12	½: 12	½: 12	½: 12	⅝: 12	⅝: 12	¾: 12	⅞: 12	1 : 12	1 : 12	1 : 12
SPACING "S"	9"	9"	9"	9"	9"	7"	6"	5"	6"	6"	6"	6"	6"	6"	6"	10"	8"
ⓐ BARS	-	-	-	-	-	-	-	-	-	-	-	-	-	-	#7	#7	#6
ⓑ BARS	-	-	-	-	-	-	-	-	#7	#7	#7	#7	#7	#7	#9	#9	#8
ⓒ BARS	#6	#6	#6	#6	#6	#6	#7	#7	#8	#9	#9	#10	#10	#10	#11	#11	#11
ⓓ BARS	#5	#5	#6	#6	#6	#6	#9	#8	#8	#9	#9	#10	#10	#10	#11	#11	#11
h1	-	-	-	-	-	-	5'-9"	5'-10"	8'-0"	9'-0"	10'-1"	11'-0"	12'-1"	13'-0"	13'-0"	12'-7"	11'-6"
h2	-	-	-	-	-	-	-	-	10'-5"	13'-0"	14'-7"	17'-6"	19'-0"	20'-5"	19'-0"	18'-0"	20'-2"
h3	-	-	-	-	-	-	-	-	-	-	-	-	-	-	21'-2"	21'-10"	24'-0"
ZONE 1 ⓢ BARS	#5 @ 18	#5 @ 18	#5 @ 18	#5 @ 18	#5 @ 18	#5 @ 18	#5 @ 18	#5 @ 18	#5 @ 18	#5 @ 18	#5 @ 12	#5 @ 12	#5 @ 12	#5 @ 12	#5 @ 12	#5 @ 12	#5 @ 12
ZONE 2 ⓢ BARS	#5 @ 18	#5 @ 18	#5 @ 18	#5 @ 18	#5 @ 18	#5 @ 18	#5 @ 12	#5 @ 12	#5 @ 12	#5 @ 12	#5 @ 12	#5 @ 12	#6 @ 12	#6 @ 12	#6 @ 12	#7 @ 12	#7 @ 12
ZONE 1 ⓣ BARS	#4 @ 18	#4 @ 18	#4 @ 18	#4 @ 18	#4 @ 18	#4 @ 18	#4 @ 18	#4 @ 18	#4 @ 18	#4 @ 18	#4 @ 12	#4 @ 12	#4 @ 18	#4 @ 12	#4 @ 12	#4 @ 12	#4 @ 12
ZONE 2 ⓣ BARS	#4 @ 18	#4 @ 18	#4 @ 18	#4 @ 18	#4 @ 18	#4 @ 18	#4 @ 18	#4 @ 18	#4 @ 18	#4 @ 18	#4 @ 12	#4 @ 12	#4 @ 12	#4 @ 12	#5 @ 12	#5 @ 12	#5 @ 12
Ser: B', q_o'	6.8, 0.7	6.5, 1.0	6.2, 1.3	6.0, 1.6	6.3, 2.0	7.5, 2.1	8.6, 2.2	9.8, 2.3	11.0, 2.4	12.1, 2.5	13.2, 2.8	14.4, 2.9	15.5, 3.1	16.8, 3.3	18.0, 3.5	19.2, 3.7	20.6, 3.7
Str: B', q_o	6.6, 1.6	5.0, 1.8	3.6, 2.3	3.0, 3.3	3.2, 4.0	4.3, 3.8	5.3, 3.7	6.4, 3.7	7.4, 3.8	8.2, 4.1	9.0, 4.4	9.9, 4.6	10.7, 4.9	11.7, 5.2	12.6, 5.4	13.6, 5.8	14.6, 5.9
Ext I: B', q_o	5.2, 1.1	4.7, 1.5	3.9, 2.2	3.1, 3.4	2.8, 4.8	3.2, 5.3	3.6, 5.7	4.1, 6.1	4.6, 6.4	5.0, 6.9	5.3, 7.6	5.8, 8.1	6.1, 8.9	6.7, 9.4	7.1, 10.0	7.5, 10.7	8.2, 10.9
Ext II: B', q_o	2.6, 2.2	2.7, 2.6	2.8, 3.1	2.9, 3.6	3.7, 3.6	5.2, 3.3	6.7, 3.1	8.3, 3.0	9.8, 3.0	11.2, 3.1	12.5, 3.2	13.9, 3.4	15.2, 3.6	16.7, 3.8	18.0, 4.0	19.3, 4.2	20.8, 4.3

NOTES:

1. For details not shown and drainage notes see RSP B3-5
2. For wall stem joint details see B0-3 / 3-3 and B0-3 / 3-4
3. At ⓒ bars:
   H ≤ 6', no splices are allowed within 1'-8" above the top of footing.
   H > 6', no splices are allowed within H/4 above the top of footing.
4. Bundle ⓓ bars for H = 34' & 36'.
5. Provide #6 @ 10" x 15'-0" ⓔ bars over a distance of 8'-0" measured from all expansion joints, begin wall and end wall locations. For H ≤ 14', hook ⓔ bar into footing and reduce bar length as needed to maintain Min Clr cover.

STATE OF CALIFORNIA
DEPARTMENT OF TRANSPORTATION

RETAINING WALL TYPE 1 (CASE 1)

NO SCALE

RSP B3-1A DATED APRIL 20, 2012 SUPPLEMENTS THE STANDARD PLANS BOOK DATED 2010.

REVISED STANDARD PLAN RSP B3-1A

2010 REVISED STANDARD PLAN RSP B3-1A

2-22-12

Dist	COUNTY	ROUTE	POST MILES TOTAL PROJECT	SHEET No.	TOTAL SHEETS
03	ED	50	R30.7/R31.7	86	119

Gary Wang
REGISTERED CIVIL ENGINEER

April 20, 2012
PLANS APPROVAL DATE

REGISTERED PROFESSIONAL ENGINEER
Gary Wang
No. C58298
Exp. 6-30-12
CIVIL
STATE OF CALIFORNIA

THE STATE OF CALIFORNIA OR ITS OFFICERS OR AGENTS SHALL NOT BE RESPONSIBLE FOR THE ACCURACY OR COMPLETENESS OF SCANNED COPIES OF THIS PLAN SHEET.

TO ACCOMPANY PLANS DATED 8-19-13

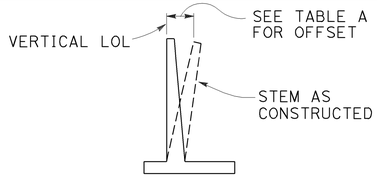

APPROXIMATE WALL OFFSET VALUES

Values for offseting forms to be determined by the Engineer.

TABLE A

H	OFFSET
4'-12'	H/200
14'-16'	H/160
18'-20'	H/140
22'-24'	H/130
26'-36'	2½"

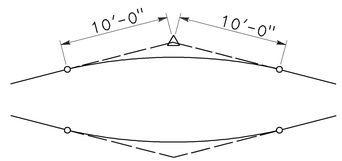

20'-0" VC AT TOP OF WALL SLOPE CHANGE

Where shown on the plans

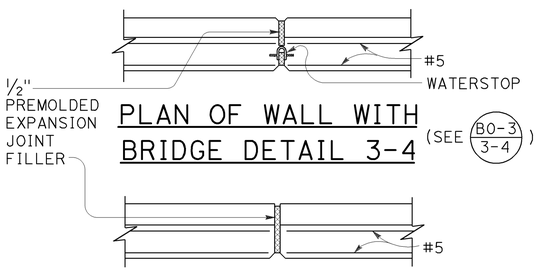

PLAN OF WALL WITH BRIDGE DETAIL 3-4

(SEE B0-3 / 3-4)

PLAN OF WALL WITH EXPANSION JOINT ONLY

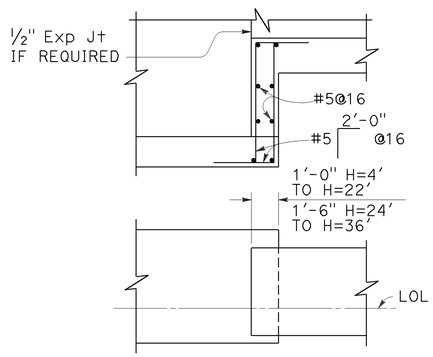

FOOTING STEP

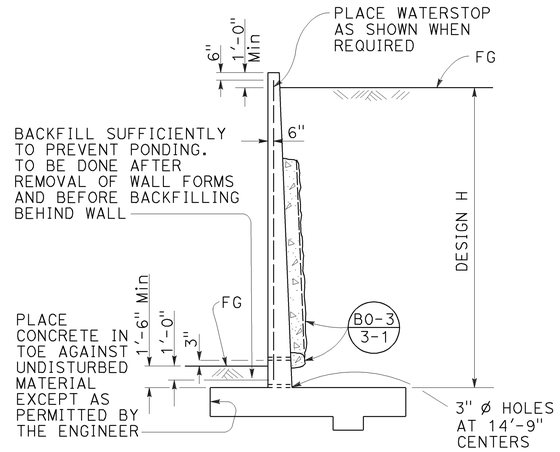

DESIGN AND DRAINAGE

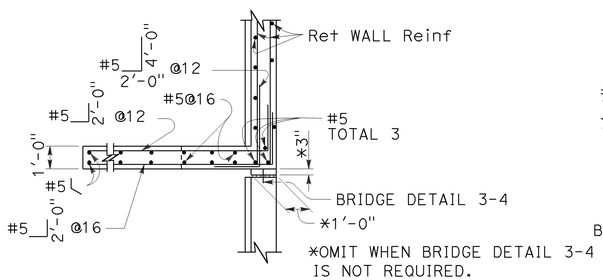

PLAN

(For return wall Type "A")

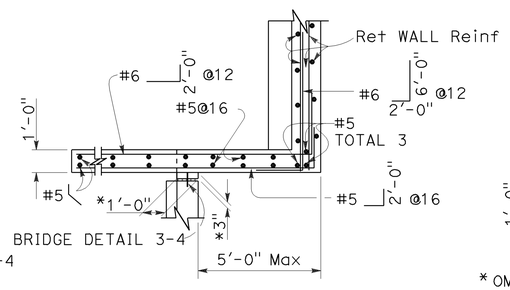

PLAN

(For return wall Type "B")

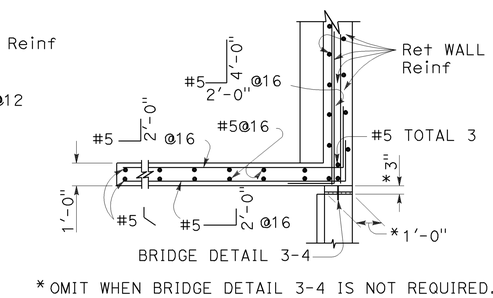

*OMIT WHEN BRIDGE DETAIL 3-4 IS NOT REQUIRED.

PLAN

(For return wall Type "C")

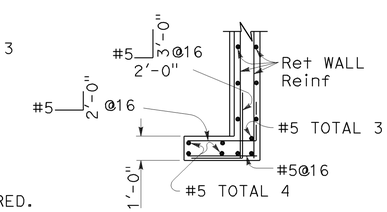

PLAN

(For return wall Type "D")

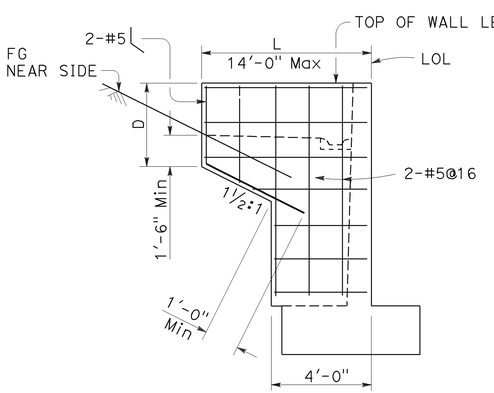

ELEVATION

RETURN WALL TYPE "A"

Use where H=8' or less

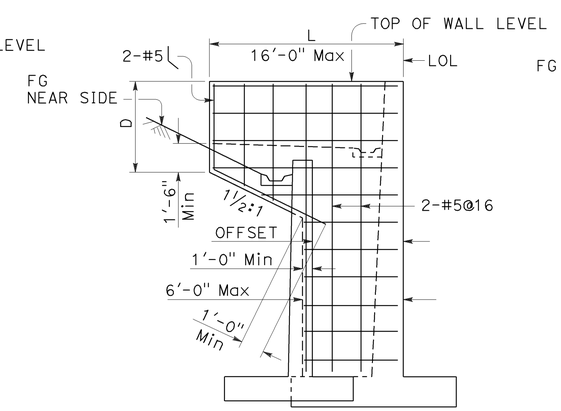

ELEVATION

RETURN WALL TYPE "B"

Use where H=10' or more on offset walls

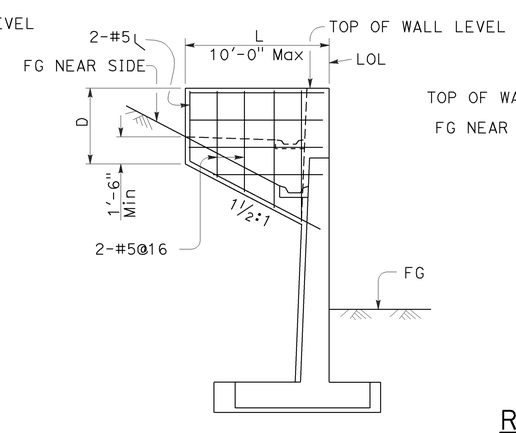

ELEVATION

RETURN WALL TYPE "C"

Use where H=10' or more on straight walls

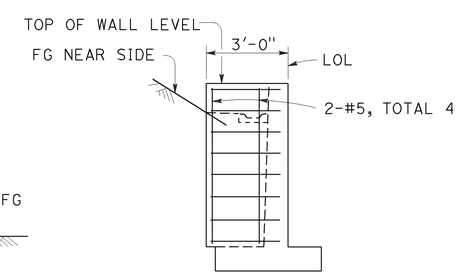

ELEVATION

RETURN WALL TYPE "D"

Use where H=6' or less

DESIGN CONDITIONS:

Design "H" may be exceeded by 6" before going to the next size. Special footing design is required where foundation material is incapable of supporting bearing stress listed in table

Return wall not required unless shown elsewhere

DESIGN NOTES:

DESIGN: AASHTO LRFD Bridge Design Specifications, 4th edition with California Amendments

LIVE LOAD: Surcharge on level ground surface

SOIL: ø = 34°
γ = 120 pcf

REINFORCED CONCRETE: fy = 60,000 psi
fc' = 3,600 psi

STATE OF CALIFORNIA
DEPARTMENT OF TRANSPORTATION

RETAINING WALL DETAILS No. 1

NO SCALE

RSP B3-5 DATED APRIL 20, 2012 SUPERSEDES STANDARD PLAN B3-5 DATED MAY 20, 2011 - PAGE 277 OF THE STANDARD PLANS BOOK DATED 2010.

REVISED STANDARD PLAN RSP B3-5

2010 REVISED STANDARD PLAN RSP B3-5

Dist	COUNTY	ROUTE	POST MILES TOTAL PROJECT	SHEET No.	TOTAL SHEETS
03	ED	50	R30.7/R31.7	87	119

REGISTERED CIVIL ENGINEER

July 19, 2013
PLANS APPROVAL DATE

REGISTERED PROFESSIONAL ENGINEER
Tillat Satter
No. C42892
Exp. 3-31-14
CIVIL
STATE OF CALIFORNIA

THE STATE OF CALIFORNIA OR ITS OFFICERS OR AGENTS SHALL NOT BE RESPONSIBLE FOR THE ACCURACY OR COMPLETENESS OF SCANNED COPIES OF THIS PLAN SHEET.

TO ACCOMPANY PLANS DATED 8-19-13

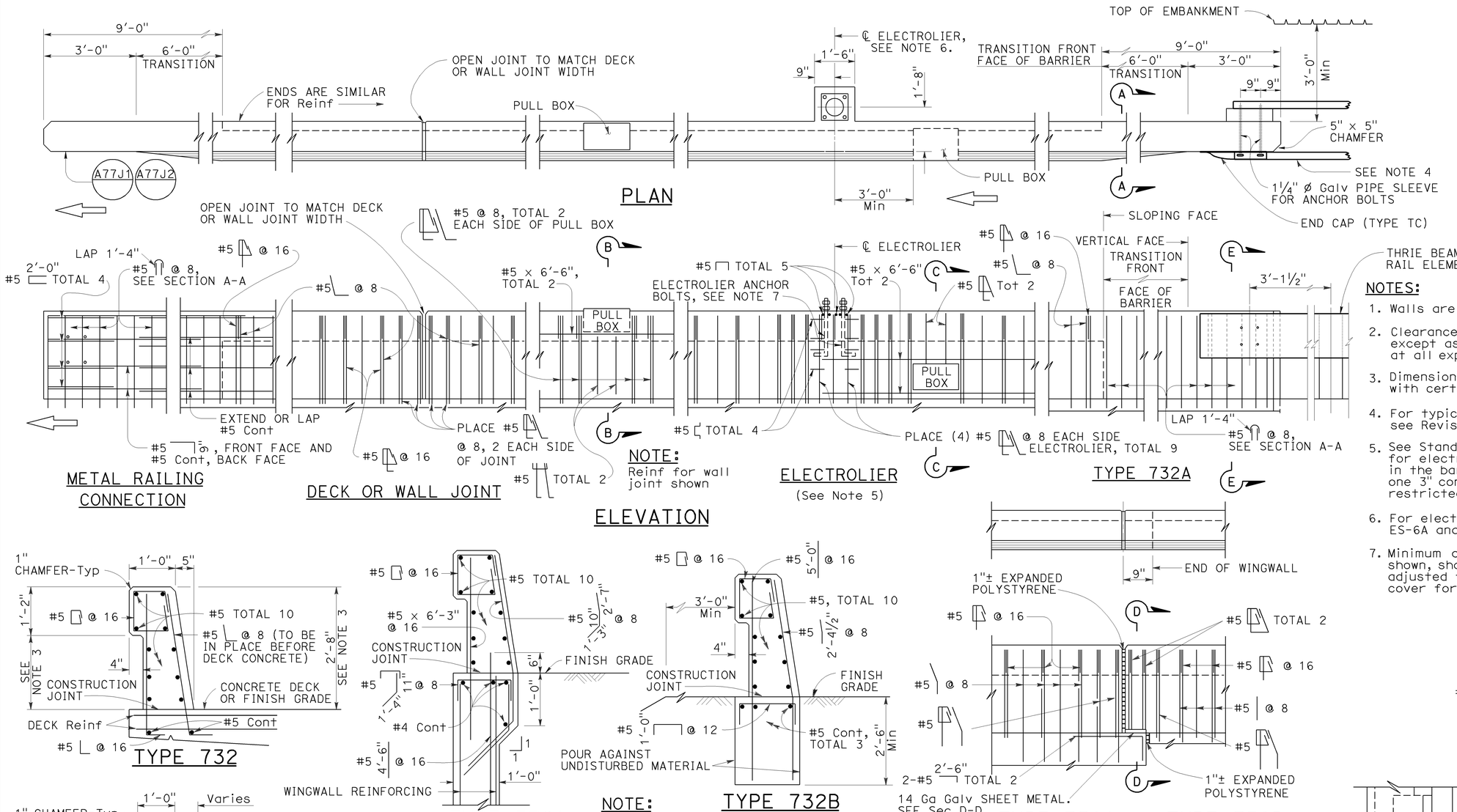

NOTES:

1. Walls are to be backfilled before barrier is placed.
2. Clearance to reinforcing steel in barrier to be 1", except as noted. Longitudinal reinforcement to stop at all expansion joints.
3. Dimensions may vary with roadway cross slope and with certain thickness of surfacing. See Project Plans.
4. For typical metal railing connection details not shown, see Revised Standard Plans RSP A77U1 and RSP A77U2.
5. See Standard Plans ES-9A, ES-9B, ES-9C, ES-9D and ES-9E for electrical details. The maximum number of conduits in the barrier is limited to two 2" conduits along with one 3" conduit. When a 3" conduit is used, it is restricted to the base of the barrier.
6. For electrolier mounting details, See Standard Plans ES-6A and ES-6B.
7. Minimum concrete edge distance, to the reinforcing shown, shall be maintained. Edge distance may be adjusted to accommodate increase in concrete cover for architectual treatment.

TYPE 732

TYPE 732A

TYPE 732B

NOTE: Types 732A and 732B are similar to Type 732 except as noted.

TYPE 732A TYPE 732B

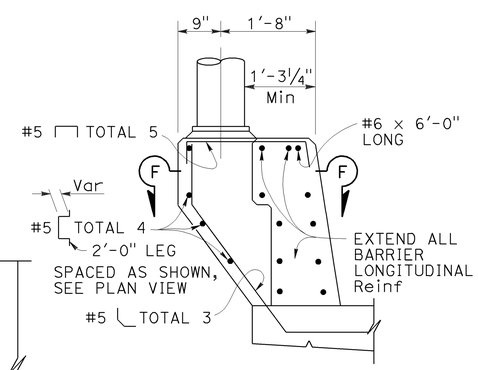

PEDESTAL ELEVATION

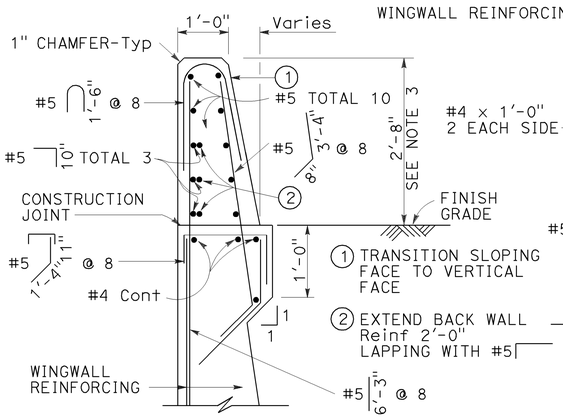

SECTION A-A

Details shown for barrier anchorage to Type 732A. Anchorage for barrier Types 732 and 732A are similar to their respective details.

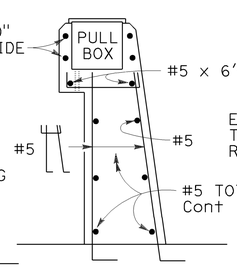

SECTION B-B

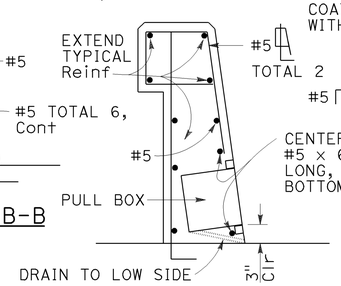

SECTION C-C
See Notes

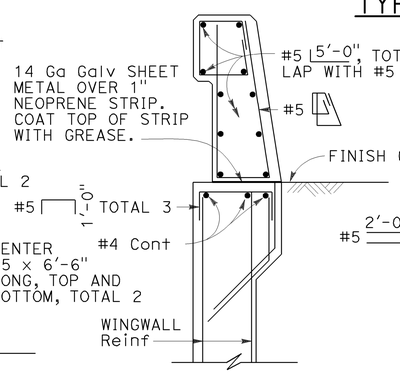

SECTION D-D

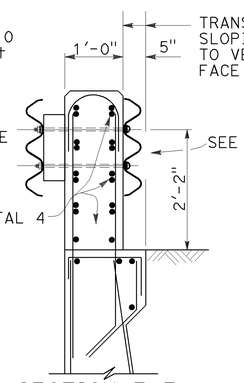

SECTION E-E
See Notes

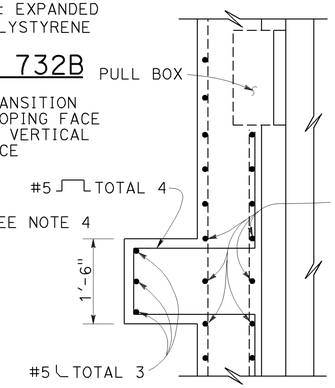

SECTION F-F

STATE OF CALIFORNIA
DEPARTMENT OF TRANSPORTATION

CONCRETE BARRIER TYPE 732

NO SCALE

RSP B11-55 DATED JULY 19, 2013 SUPERSEDES STANDARD PLAN B11-55 DATED MAY 20, 2011 - PAGE 297 OF THE STANDARD PLANS BOOK DATED 2010.

REVISED STANDARD PLAN RSP B11-55

2010 REVISED STANDARD PLAN RSP B11-55

6-27-13

Dist	COUNTY	ROUTE	POST MILES TOTAL PROJECT	SHEET No.	TOTAL SHEETS
03	ED	50	R30.7/R31.7	88	119

Theresa Gabriel
REGISTERED ELECTRICAL ENGINEER

July 19, 2013
PLANS APPROVAL DATE

REGISTERED PROFESSIONAL ENGINEER
Theresa Aziz Gabriel
No. E15129
Exp. 6-30-14
ELECTRICAL
STATE OF CALIFORNIA

THE STATE OF CALIFORNIA OR ITS OFFICERS OR AGENTS SHALL NOT BE RESPONSIBLE FOR THE ACCURACY OR COMPLETENESS OF SCANNED COPIES OF THIS PLAN SHEET.

TO ACCOMPANY PLANS DATED 8-19-13

LEGEND:

AB	ABANDON. IF APPLIED TO CONDUIT, REMOVE CONDUCTORS
BC	INSTALL PULL BOX IN EXISTING CONDUIT RUN
BP	PEDESTRIAN BARRICADE, TYPE AS INDICATED ON PLAN
CB	INSTALL CONDUIT INTO EXISTING PULL BOX
CC	CONNECT NEW AND EXISTING CONDUIT. REMOVE EXISTING CONDUCTORS AND INSTALL CONDUCTORS AS INDICATED
CF	CONDUIT TO REMAIN FOR FUTURE USE. REMOVE CONDUCTORS. INSTALL PULL TAPE
DH	DETECTOR HANDHOLE
FA	FOUNDATION TO BE ABANDONED
IS	INSTALL SIGN ON SIGNAL MAST ARM
NS	NO SLIP BASE ON STANDARD
PEC	PHOTOELECTRIC CONTROL
PEU	PHOTOELECTRIC UNIT
RC	EQUIPMENT OR MATERIAL TO BE REMOVED AND BECOME THE PROPERTY OF THE CONTRACTOR
RE	REMOVE ELECTROLIER, FUSES AND BALLAST. TAPE ENDS OF CONDUCTORS
RL	RELOCATE EQUIPMENT
RR	REMOVE AND REUSE EQUIPMENT
RS	REMOVE AND SALVAGE EQUIPMENT
SC	SPLICE NEW TO EXISTING CONDUCTORS
SD	SERVICE DISCONNECT
TSP	TELEPHONE SERVICE POINT

ABBREVIATIONS

APS	ACCESSIBLE PEDESTRIAN SIGNAL
BBS	BATTERY BACKUP SYSTEM
BC	BOLT CIRCLE
BPB	BICYCLE PUSH BUTTON
C	CONDUIT
CB	CIRCUIT BREAKER
CCTV	CLOSED CIRCUIT TELEVISION
Ckt	CIRCUIT
CMS	CHANGEABLE MESSAGE SIGN
Ctid	CALTRANS IDENTIFICATION
Comm	COMMUNICATION
DLC	LOOP DETECTOR LEAD-IN CABLE
EMS	EXTINGUISHABLE MESSAGE SIGN
EVUC	EMERGENCY VEHICLE UNIT CABLE
EVUD	EMERGENCY VEHICLE UNIT DETECTOR
FB	FLASHING BEACON
FBCA	FLASHING BEACON CONTROL ASSEMBLY
FBS	FLASHING BEACON WITH SLIP BASE
FO	FIBER OPTIC
G	EQUIPMENT GROUNDING CONDUCTOR
GB	GROUND BUS
GFCI	GROUND FAULT CIRCUIT INTERRUPTER
HAR	HIGHWAY ADVISORY RADIO
Hex	HEXAGONAL
HPS	HIGH PRESSURE SODIUM
IISNS	INTERNALLY ILLUMINATED STREET NAME SIGN
ISL	INDUCTION SIGN LIGHTING
LED	LIGHT EMITTING DIODE
LMA	LUMINAIRE MAST ARM
LPS	LOW PRESSURE SODIUM
Ltg	LIGHTING
Lum	LUMINAIRE
M	METERED
MAT	MAST ARM MOUNTING TOP ATTACHMENT
MAS	MAST ARM MOUNTING SIDE ATTACHMENT
M/M	MULTIPLE TO MULTIPLE TRANSFORMER
Mtg	MOUNTING
MV	MERCURY VAPOR LIGHTING FIXTURE
MVDS	MICROWAVE VEHICLE DETECTION SYSTEM
N	NEUTRAL (GROUNDED CONDUCTOR)
NB	NEUTRAL BUS
NC	NORMALLY CLOSE
NO	NORMALLY OPEN
P	CIRCUIT BREAKER'S POLE
PB	PULL BOX
PBA	PUSH BUTTON ASSEMBLY
PEC	PHOTOELECTRIC CONTROL
Ped	PEDESTRIAN
PEU	PHOTOELECTRIC UNIT
PT	CONDUIT WITH PULL TAPE
RE	RELOCATED EQUIPMENT
RM	RAMP METERING
RWIS	ROADSIDE WEATHER INFORMATION SYSTEM
SB	SLIP BASE
SIC	SIGNAL INTERCONNECT CABLE
Sig	SIGNAL
SMA	SIGNAL MAST ARM
SNS	STREET NAME SIGN
SP	SERVICE POINT
TDC	TELEPHONE DEMARCATION CABINET
TMS	TRAFFIC MONITORING STATION
TOS	TRAFFIC OPERATIONS SYSTEM
Veh	VEHICLE
VIVDS	VIDEO IMAGE VEHICLE DETECTION SYSTEM
WIM	WEIGH-IN-MOTION
Xfmr	TRANSFORMER

SOFFIT AND WALL MOUNTED LUMINAIRES

PENDANT, 70 W HPS UNLESS OTHERWISE SPECIFIED

FLUSH, 70 W HPS UNLESS OTHERWISE SPECIFIED

WALL SURFACE, 70 W HPS UNLESS OTHERWISE SPECIFIED

EXISTING SOFFIT OR WALL LUMINAIRE TO REMAIN UNMODIFIED

EXISTING SOFFIT OR WALL LUMINAIRE TO BE MODIFIED AS SPECIFIED

NOTE:

Arrow indicates "street side" of luminaire.

COMMONLY USED SYMBOLS FOR UNITED STATES CUSTOMARY UNITS OF MEASUREMENT:

SYMBOL USED	DEFINITIONS
Ω	OHMS
min	MINUTE
s	SECOND
bps	BITS PER SECOND
Bps	BYTES PER SECOND
A	AMPERE
V	VOLT
V(dc)	VOLT (DIRECT CURRENT)
V(ac)	VOLT (ALTERNATING CURRENT)
FC	FOOT - CANDLE
W	WATTS
VA	VOLT-AMPERE
M	MEGA
k	KILO
m	MILLI
μ	MICRO
P	PICO
Hz	HERTZ

MISCELLANEOUS ELECTROLIERS

NEW	EXISTING	
		LUMINAIRE ON WOOD POLE
		NON-STANDARD ELECTROLIER (SEE PROJECT NOTES OR PROJECT PLANS)
		CITY ELECTROLIER
		ELECTROLIER FOUNDATION (FUTURE INSTALLATION)

NOTES:

1. HPS luminaires shall be 310 W HPS when installed on Type 21, 21D, 30, 31 and 32 Standards, unless otherwise specified. HPS luminaires shall be 200 W when installed on other type standards or poles, unless otherwise specified.
2. LED luminaires shall be 235 W when installed on Type 21, 21D, 30, 31 and 32 Standards, unless otherwise specified. LED luminaires shall be 165 W when installed on other type standards or poles, unless otherwise specified.
3. Luminaires shall be the cutoff type, ANSI Type III medium cutoff lighting distribution, unless otherwise specified.

STANDARD ELECTROLIER

NEW	EXISTING	STANDARD TYPE
		15
		15D
		15 STRUCTURE
		15D STRUCTURE
		21
		21D
		21 STRUCTURE
		21D STRUCTURE
		30
		31
		32

STATE OF CALIFORNIA
DEPARTMENT OF TRANSPORTATION

ELECTRICAL SYSTEMS (LEGEND AND ABBREVIATIONS)

NO SCALE

RSP ES-1A DATED JULY 19, 2013 SUPERSEDES STANDARD PLAN ES-1A DATED MAY 20, 2011 - PAGE 425 OF THE STANDARD PLANS BOOK DATED 2010.

REVISED STANDARD PLAN RSP ES-1A

2010 REVISED STANDARD PLAN RSP ES-1A

Dist	COUNTY	ROUTE	POST MILES TOTAL PROJECT	SHEET No.	TOTAL SHEETS
03	ED	50	R30.7/R31.7	89	119

Theresa Gabriel
REGISTERED ELECTRICAL ENGINEER

July 19, 2013
PLANS APPROVAL DATE

REGISTERED PROFESSIONAL ENGINEER Theresa Aziz Gabriel No. E15129 Exp. 6-30-14 ELECTRICAL STATE OF CALIFORNIA

THE STATE OF CALIFORNIA OR ITS OFFICERS OR AGENTS SHALL NOT BE RESPONSIBLE FOR THE ACCURACY OR COMPLETENESS OF SCANNED COPIES OF THIS PLAN SHEET.

TO ACCOMPANY PLANS DATED 8-19-13

CONDUIT

NEW	EXISTING	
		LIGHTING CONDUIT, UNLESS OTHERWISE INDICATED OR NOTED
		TRAFFIC SIGNAL CONDUIT
C	c	COMMUNICATION CONDUIT
T	t	TELEPHONE CONDUIT
F	f	FIRE ALARM CONDUIT
FO	fo	FIBER OPTIC CONDUIT
		CONDUIT TERMINATION
R	r	CONDUIT RISER ATTACHED TO THE STRUCTURE OR SERVICE POLE

SERVICE EQUIPMENT

NEW	EXISTING	
OH	oh	OVERHEAD LINES
U	U	WOOD POLE, "U" INDICATES UTILITY OWNED
		POLE GUY WITH ANCHOR
		UTILITY TRANSFORMER - GROUND MOUNTED
III	III	SERVICE EQUIPMENT ENCLOSURE TYPE. DOOR INDICATES FRONT OF ENCLOSURE
T	t	TELEPHONE DEMARCATION CABINET

POLE-MOUNTED SERVICE DESIGNATION

TYPE H SERVICE, 28'-10" — TYPE OF INSTALLATION AND POLE HEIGHT ABOVE GRADE

FLASHING BEACON

NEW	EXISTING	
R	R	FLASHING BEACON (ONE VEHICLE SIGNAL HEAD WITH BACKPLATE AND VISOR) "R" INDICATES RED INDICATION, "Y" INDICATES YELLOW INDICATION
Y Y	Y Y	FLASHING BEACON WITH TYPE 15-FBS STANDARD AND A SIGN.
R R	R R	FLASHING BEACON WITH TYPES 9, 9A OR 9B SIGN UNLESS OTHERWISE SPECIFIED OR INDICATED

SIGNAL EQUIPMENT

NEW	EXISTING	
C	C	PEDESTRIAN SIGNAL HEAD "C" INDICATES COUNTDOWN PEDESTRIAN HEAD
		PUSH BUTTON ASSEMBLY POST
		PEDESTRIAN BARRICADE
		VEHICLE SIGNAL HEAD (WITH BACKPLATE AND 3-SECTIONS: RED, YELLOW AND GREEN)
		VEHICLE SIGNAL HEAD WITH ANGLE VISOR
PV	PV	MODIFICATIONS OF BASIC SYMBOL: "L" INDICATES ALL NON-ARROW SECTIONS LOUVERED "LG" INDICATES LOUVERED GREEN SECTION ONLY "PV" INDICATES ALL 12" SECTIONS PROGRAMMED VISIBILITY "8" INDICATES ALL 8" SECTIONS (ONLY WHEN SPECIFIED)
		VEHICLE SIGNAL HEAD CONSISTING OF RED, YELLOW AND GREEN LEFT ARROW SECTIONS
		VEHICLE SIGNAL HEAD CONSISTING OF RED AND YELLOW SECTIONS WITH AN UP GREEN ARROW SECTION
		VEHICLE SIGNAL HEAD (5 SECTION) CONSISTING OF RED, YELLOW AND GREEN SECTIONS WITH YELLOW AND GREEN RIGHT ARROW SECTIONS
		TYPE 15TS STANDARD WITH VEHICLE SIGNAL HEAD AND LUMINAIRE
		TYPE 21TS STANDARD WITH VEHICLE SIGNAL HEAD AND LUMINAIRE
		STANDARD WITH LUMINAIRE AND SIGNAL MAST ARMS AND ATTACHED VEHICLE SIGNAL HEADS
		TYPE 1 STANDARD WITH ATTACHED VEHICLE SIGNAL HEADS
		STANDARD WITH A SIGNAL MAST ARM, ATTACHED VEHICLE SIGNAL HEADS AND INTERNALLY ILLUMINATED STREET NAME SIGN
		CONTROLLER ASSEMBLY. DOOR INDICATES FRONT OF CABINET

SIGNAL EQUIPMENT Cont

NEW	EXISTING	
		GUARD POST
		TYPE 1 STANDARD WITH RAMP METERING SIGN
		OPTICAL DETECTOR FOR THE EMERGENCY VEHICLE DETECTION SYSTEM

NOTES:

1. All signal sections shall be 12" unless shown otherwise.
2. Signal heads shall be provided with backplates unless shown otherwise.

ILLUMINATED OVERHEAD SIGN

NEW	EXISTING	
		SINGLE POST, SINGLE ILLUMINATED SIGN, BALANCED BUTTERFLY
		SINGLE POST, DOUBLE ILLUMINATED SIGN, BALANCED BUTTERFLY
		SINGLE POST, SINGLE ILLUMINATED SIGN, FULL CANTILEVER
		DOUBLE POST, SINGLE ILLUMINATED SIGN
		SINGLE ILLUMINATED SIGN MOUNTED ON STRUCTURE
		DOUBLE POST, SINGLE ILLUMINATED SIGN WITH ELECTROLIER

STATE OF CALIFORNIA
DEPARTMENT OF TRANSPORTATION

ELECTRICAL SYSTEMS (LEGEND AND ABBREVIATIONS)

NO SCALE

RSP ES-1B DATED JULY 19, 2013 SUPERSEDES STANDARD PLAN ES-1B DATED MAY 20, 2011 - PAGE 426 OF THE STANDARD PLANS BOOK DATED 2010.

REVISED STANDARD PLAN RSP ES-1B

2010 REVISED STANDARD PLAN RSP ES-1B

7-15-13

Dist	COUNTY	ROUTE	POST MILES TOTAL PROJECT	SHEET No.	TOTAL SHEETS
03	ED	50	R30.7/R31.7	90	119

Theresa Gabriel
REGISTERED ELECTRICAL ENGINEER

July 19, 2013
PLANS APPROVAL DATE

REGISTERED PROFESSIONAL ENGINEER
Theresa Aziz Gabriel
No. E15129
Exp. 6-30-14
ELECTRICAL
STATE OF CALIFORNIA

THE STATE OF CALIFORNIA OR ITS OFFICERS OR AGENTS SHALL NOT BE RESPONSIBLE FOR THE ACCURACY OR COMPLETENESS OF SCANNED COPIES OF THIS PLAN SHEET.

TO ACCOMPANY PLANS DATED 8-19-13

EQUIPMENT IDENTIFICATION

ILLUMINATED SIGN IDENTIFICATION NUMBER:

SIGN No. 12345

10 ISL SCI 1.0

- SIGN NUMBER - PLACE ON POST OR STRUCTURE
- TRANSFORMER RATING (kVA)
- LIGHTING CONTROL TYPE
- NUMBER AND TYPE OF FIXTURES

} DO NOT PLACE ON STANDARD OR STRUCTURE

ELECTROLIER OR EQUIPMENT IDENTIFICATION NUMBER:

12345 - 15'-0"

- MAST ARM LENGTH, IF SHOWN. DO NOT PLACE ON STANDARD OR STRUCTURE
- EQUIPMENT NUMBER - PLACE ON STANDARD OR STRUCTURE. EXISTING EQUIPMENT NUMBERS ARE SHOWN IN PARENTHESIS

CONDUIT AND CONDUCTOR IDENTIFICATION:

1½"C, 2#10, 15#14, 2 DLC, 12P#18

- PAIR
- NUMBER AND SIZE OF CONDUCTORS AND CABLES
- SIZE OF CONDUIT IN INCHES

ø1, ø2, ø2P, etc.	TRAFFIC PHASE IDENTIFICATION FOR SIGNAL FACES, DETECTORS AND PHASE DIAGRAMS
1 2 3	LEGEND NUMBERS
A B C	EQUIPMENT, SIGNAL POLES, INSTALLATION OR ITEMS
1 2 3	CONDUIT RUN NUMBERS

SIGNAL AND LIGHTING STANDARD (TYPICAL DESIGNATION):

19A - 3 - 100

- WIND VELOCITY = 100 mph
- CASE 3 ARM LOADING
- STANDARD TYPE
- STANDARD PLAN SHEET NUMBER
- DETAIL, NUMBER, SECTION, TYPE OR ELEVATION

MISCELLANEOUS EQUIPMENT

NEW	EXISTING	
CMS	cms	CHANGEABLE MESSAGE SIGN
		CLOSED CIRCUIT TELEVISION CAMERA
		HIGHWAY ADVISORY RADIO POLE AND ANTENNA
EMS	ems	EXTINGUISHABLE MESSAGE SIGN
M V	m v	DETECTION DEVICE M = MICROWAVE SENSOR V = VIDEO IMAGE SENSOR

WIRING DIAGRAM LEGEND

----	EXTERNAL CONDUCTOR
	CONDUCTOR OR BUS
	TIE POINT
	CONTACTOR COIL
	CONTACTOR, NO CONTACT
	TERMINAL BLOCKS
	CONTACTOR, NC CONTACT
	ENCLOSURE BOND
	GROUNDING ELECTRODE
	CIRCUIT BREAKER
	RECEPTACLE

PULL BOXES

NEW	EXISTING	
		PULL BOX, No. 5 UNLESS OTHERWISE INDICATED OR NOTED
3	9A(21)	PULL BOX, ADDITIONAL DESIGNATIONS OR DESCRIPTIONS

3 No. 3½ PULL BOX
5 No. 5 PULL BOX
6 No. 6 PULL BOX
7 No. 7 (CEILING PULL BOX)
8 No. 8 (PENDANT SOFFIT PULL BOX)
9 No. 9 PULL BOX
9A No. 9A PULL BOX

(C) COMMUNICATIONS PULL BOX
(E) PULL BOX WITH EXTENSION
(S) SPRINKLER CONTROL PULL BOX
(21) ANCHOR BOLTS AND CONDUIT FOR FUTURE INSTALLATION OF TYPE 21 STANDARD
(T) TRAFFIC PULL BOX

VEHICLE DETECTORS

5 J 9 U

- VEHICLE DETECTOR DESIGNATION
- U = UPPER
  L = LOWER
- SLOT NUMBER IN INPUT FILE
- INPUT FILE (I OR J)
- PHASE

NEW	EXISTING	
		TYPE A DETECTOR LOOP. OUTLINE OF SAWCUT SHOWN
		TYPE B DETECTOR LOOP. OUTLINE OF SAWCUT SHOWN
		TYPE C DETECTOR LOOP. OUTLINE OF SAWCUT SHOWN
		TYPE D DETECTOR LOOP. OUTLINE OF SAWCUT SHOWN
		TYPE E DETECTOR LOOP. OUTLINE OF SAWCUT SHOWN
		TYPE Q DETECTOR LOOP. OUTLINE OF SAWCUT SHOWN
		MAGNETIC DETECTOR
DH	dh	DETECTOR HANDHOLE
		MICROWAVE OR VIDEO DETECTION ZONE

STATE OF CALIFORNIA
DEPARTMENT OF TRANSPORTATION

ELECTRICAL SYSTEMS (LEGEND AND ABBREVIATIONS)

NO SCALE

RSP ES-1C DATED JULY 19, 2013 SUPERSEDES STANDARD PLAN ES-1C DATED MAY 20, 2011 - PAGE 427 OF THE STANDARD PLANS BOOK DATED 2010.

REVISED STANDARD PLAN RSP ES-1C

2010 REVISED STANDARD PLAN RSP ES-1C

7-11-13

Dist	COUNTY	ROUTE	POST MILES TOTAL PROJECT	SHEET No.	TOTAL SHEETS
03	ED	50	R30.7/R31.7	91	119

Theresa Gabriel
REGISTERED ELECTRICAL ENGINEER

July 19, 2013
PLANS APPROVAL DATE

REGISTERED PROFESSIONAL ENGINEER Theresa Aziz Gabriel No. E15129 Exp. 6-30-14 ELECTRICAL STATE OF CALIFORNIA

THE STATE OF CALIFORNIA OR ITS OFFICERS OR AGENTS SHALL NOT BE RESPONSIBLE FOR THE ACCURACY OR COMPLETENESS OF SCANNED COPIES OF THIS PLAN SHEET.

TO ACCOMPANY PLANS DATED 8-19-13

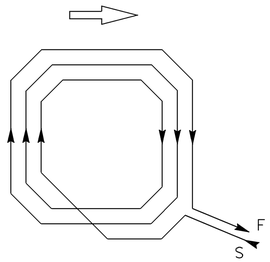

WINDING DETAIL

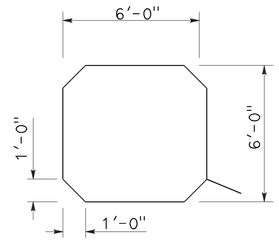

SAWCUT DETAIL

TYPE A LOOP DETECTOR CONFIGURATION

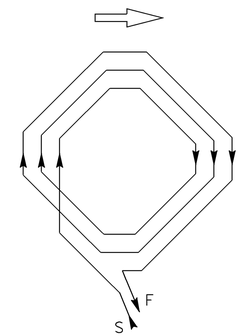

WINDING DETAIL

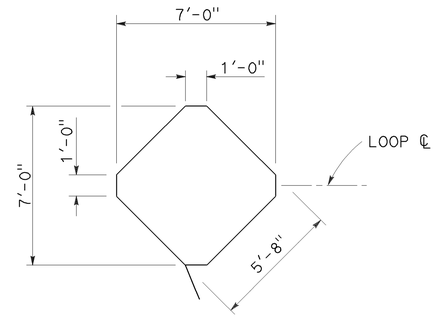

SAWCUT DETAIL

TYPE B LOOP DETECTOR CONFIGURATION

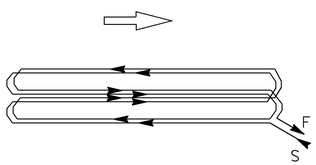

WINDING DETAIL

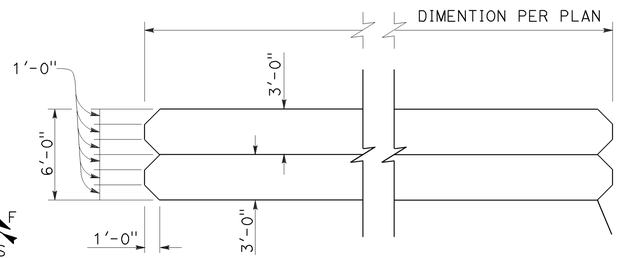

SAWCUT DETAIL

TYPE C LOOP DETECTOR CONFIGURATION

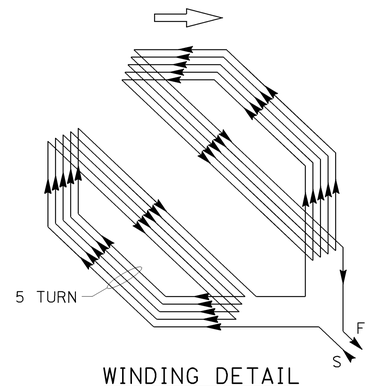

WINDING DETAIL

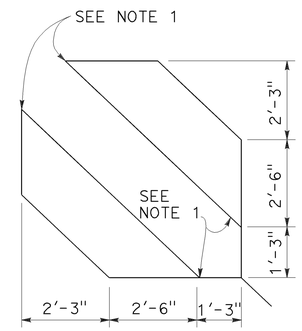

SAWCUT DETAIL

TYPE D LOOP DETECTOR CONFIGURATION

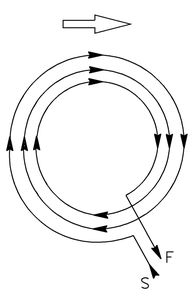

WINDING DETAIL

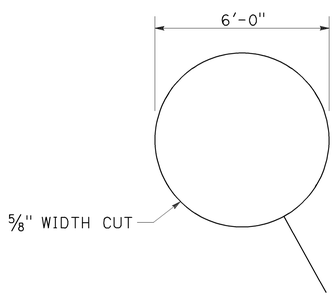

SAWCUT DETAIL

TYPE E LOOP DETECTOR CONFIGURATION

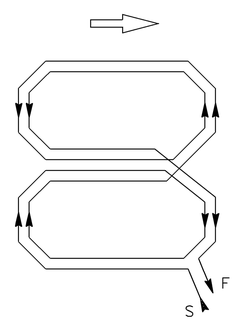

WINDING DETAIL

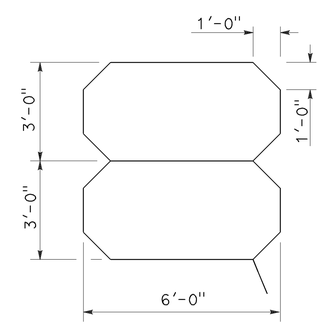

SAWCUT DETAIL

TYPE Q LOOP DETECTOR CONFIGURATION

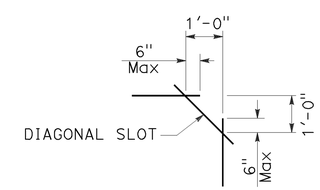

PLAN VIEW OF DIAGONAL SLOT AT CORNERS

NOTES:

1. Round corners of acute angle sawcuts to prevent damage to conductors.
2. Typical distance separating loops from edge to edge is 10' for Type A, B, D and E installation in single lane.

STATE OF CALIFORNIA
DEPARTMENT OF TRANSPORTATION

ELECTRICAL SYSTEMS (DETECTORS)

NO SCALE

RSP ES-5B DATED JULY 19, 2013 SUPERSEDES STANDARD PLAN ES-5B DATED MAY 20, 2011 - PAGE 449 OF THE STANDARD PLANS BOOK DATED 2010.

REVISED STANDARD PLAN RSP ES-5B

2010 REVISED STANDARD PLAN RSP ES-5B

7-9-13

Dist	COUNTY	ROUTE	POST MILES TOTAL PROJECT	SHEET No.	TOTAL SHEETS
03	ED	50	R30.7/R31.7	92	119

Theresa Gabriel
REGISTERED ELECTRICAL ENGINEER

July 19, 2013
PLANS APPROVAL DATE

REGISTERED PROFESSIONAL ENGINEER Theresa Aziz Gabriel No. E15129 Exp. 6-30-14 ELECTRICAL STATE OF CALIFORNIA

THE STATE OF CALIFORNIA OR ITS OFFICERS OR AGENTS SHALL NOT BE RESPONSIBLE FOR THE ACCURACY OR COMPLETENESS OF SCANNED COPIES OF THIS PLAN SHEET.

TO ACCOMPANY PLANS DATED 8-19-13

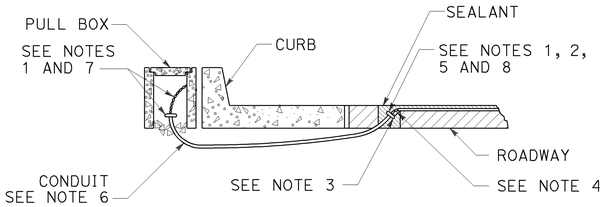

TYPE A
CURB TERMINATION DETAIL

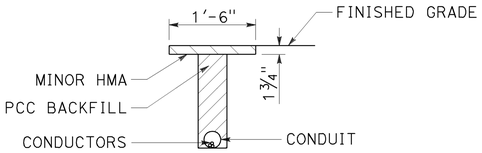

"T" TRENCH
DETAIL T

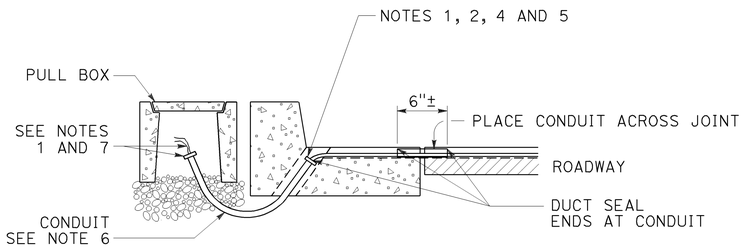

CROSS SECTION

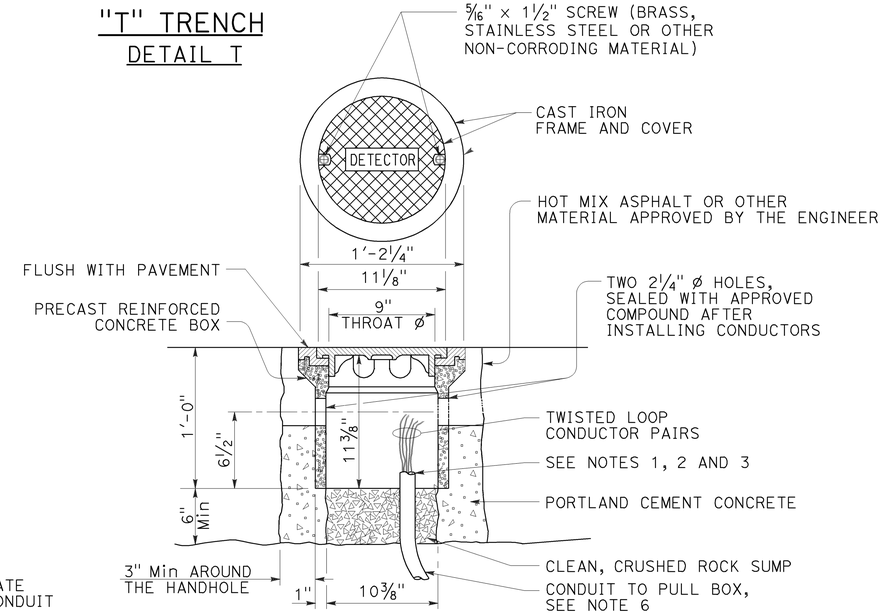

DETECTOR HANDHOLE DETAIL

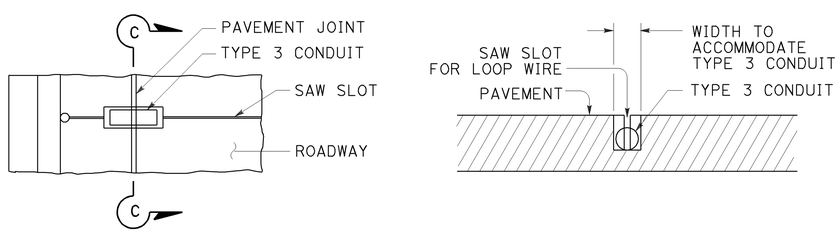

PLAN VIEW

SECTION C-C

TYPE B
CURB TERMINATION DETAIL

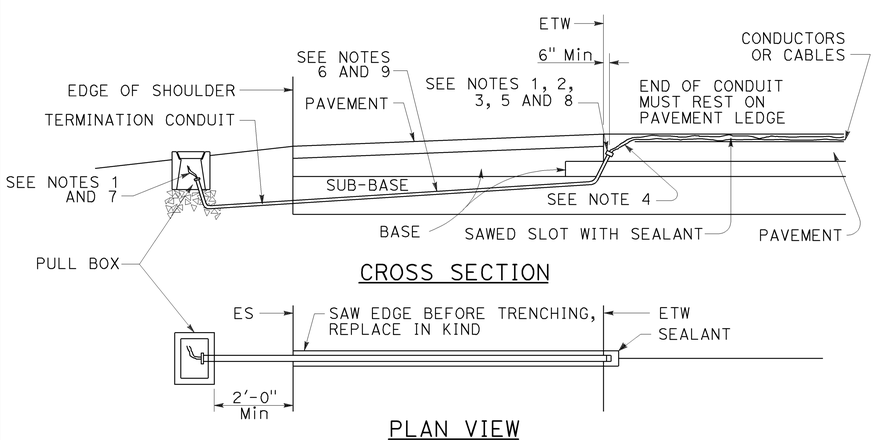

CROSS SECTION

PLAN VIEW

SHOULDER TERMINATION DETAILS

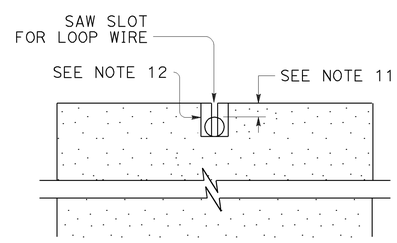

SECTION A-A

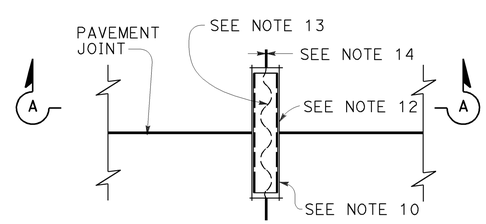

PLAN VIEW

TYPICAL LOOP LEAD-IN DETAIL AT PAVEMENT JOINT

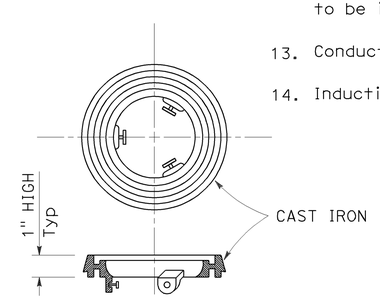

LOCKING GRADE RING

NOTES:

1. Bushing shall be used at end of conduit.
2. Tape detector conductors or cables 3" each side of bushings.
3. Install duct seal compound to each end of termination conduit before installing sealant.
4. Round all sharp edges where detector conductors or cables have to pass.
5. End of conduit shall be 3⅛" below roadway surface.
6.

Conduit size	Loop conductors
1"C minimum	1 to 2 pairs
1½"C minimum	3 to 4 pairs
2"C minimum	5 or more pairs

7. Splice detector conductors or cables to detector lead-in-cable.
8. Location of detector handhole when shown on plans.
9. When the shoulder and traveled way are paved with the same material and there is no joint between them, the conduit shall extend only 2'-0" into the shoulder pavement.
10. ¾"C, Type 3 conduit 6" long minimum, plug both ends with duct compound to keep out sealant.
11. ½" Minimum between top of conduit and pavement surface.
12. Sawcut shall not exceed 1" in width and ⅛" longer than conduit to be installed.
13. Conductors with ½" minimum slack inside conduit.
14. Inductive loop detector saw slot.

STATE OF CALIFORNIA
DEPARTMENT OF TRANSPORTATION

ELECTRICAL SYSTEMS (CURB TERMINATION AND HANDHOLE)

NO SCALE

RSP ES-5D DATED JULY 19, 2013 SUPERSEDES STANDARD PLAN ES-5D DATED MAY 20, 2011 - PAGE 451 OF THE STANDARD PLANS BOOK DATED 2010.

REVISED STANDARD PLAN RSP ES-5D

2010 REVISED STANDARD PLAN RSP ES-5D

DIST	COUNTY	ROUTE	POST MILES TOTAL PROJECT	SHEET No.	TOTAL SHEETS
03	ED	50	R30.7/R31.7	93	119

REGISTERED CIVIL ENGINEER 5-23-13 DATE

8-19-13
PLANS APPROVAL DATE

REGISTERED PROFESSIONAL ENGINEER Seung Pyo Hong No. 6-30-14 Exp. 75797 CIVIL STATE OF CALIFORNIA

The State of California or its officers or agents shall not be responsible for the accuracy or completeness of electronic copies of this plan sheet.

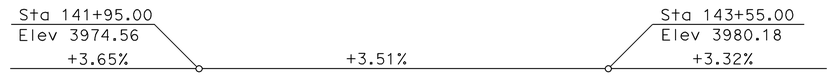

PROFILE GRADE

NO SCALE

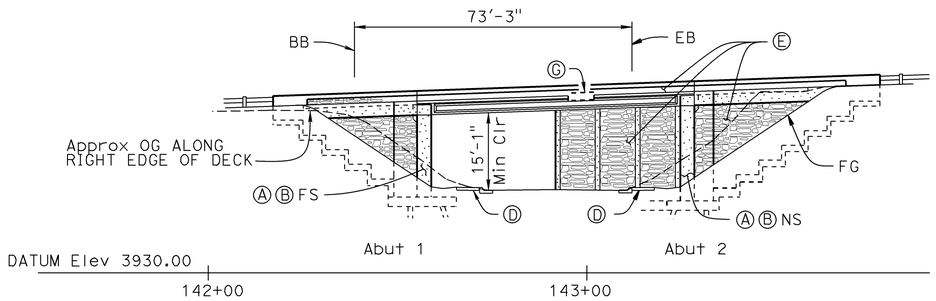

ELEVATION

1" = 20'

LEGEND:

- Indicates existing bridge
- Indicates new construction
- Indicates existing bridge to be removed
- Indicates limits of prepare bridge deck and place Polyester Concrete Overlay
- Indicates Point of Minimum Vertical Clearance

NOTE:

For "TYPICAL SECTION", see "GENERAL PLAN NO. 2" sheet

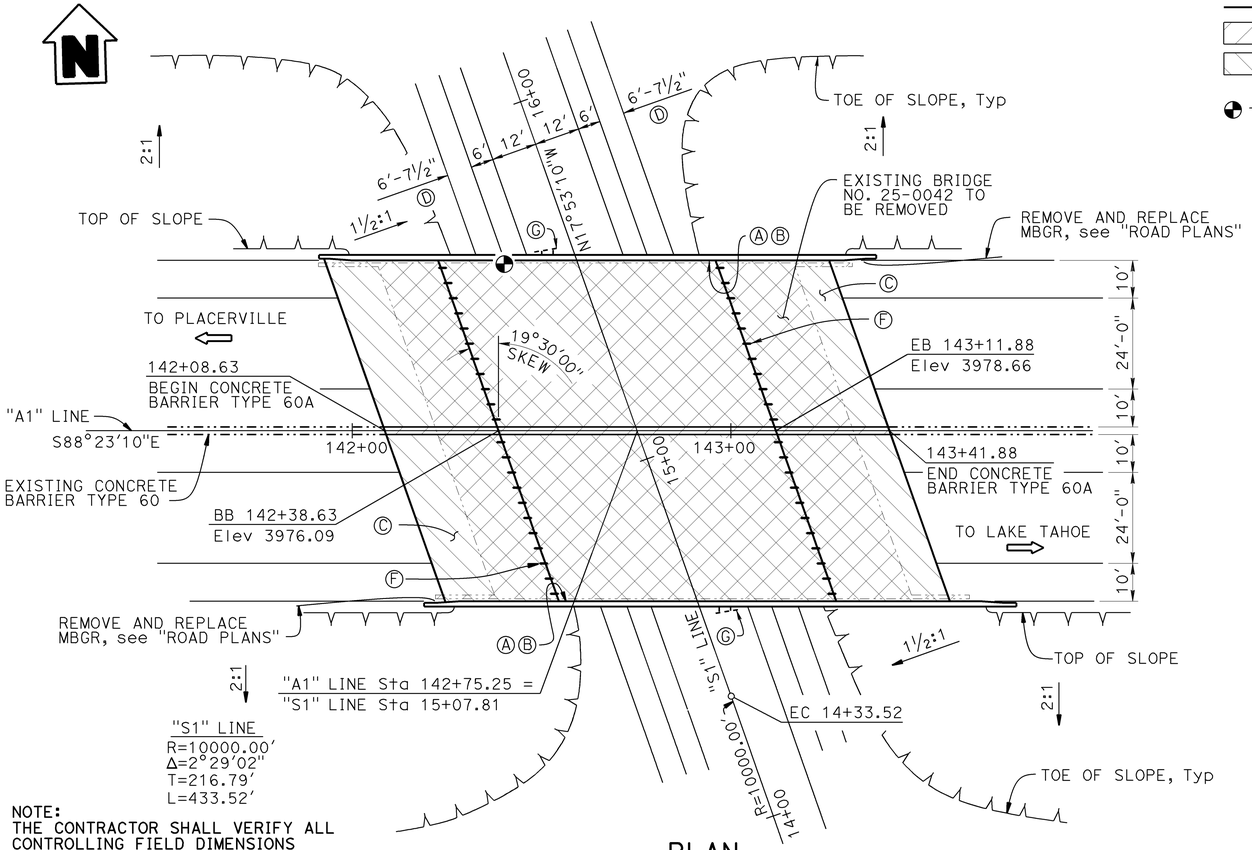

"S1" LINE
R=10000.00'
Δ=2°29'02"
T=216.79'
L=433.52'

NOTE:
THE CONTRACTOR SHALL VERIFY ALL CONTROLLING FIELD DIMENSIONS BEFORE ORDERING OR FABRICATING ANY MATERIAL.

PLAN

1" = 20'

QUANTITIES

SALVAGE METAL BRIDGE RAILING	279	LF
PREPARE CONCRETE BRIDGE DECK SURFACE	11,726	SQFT
FURNISH POLYESTER CONCRETE OVERLAY	977	CF
PLACE POLYESTER CONCRETE OVERLAY	11,726	SQFT
BRIDGE REMOVAL	LUMP	SUM
STRUCTURE EXCAVATION (BRIDGE)	2,799	CY
STRUCTURE BACKFILL (BRIDGE)	1,618	CY
FURNISH STEEL PILING (HP 14 X 117)	2,238	LF
DRIVE STEEL PILE (HP 14 X 117)	80	EA
STRUCTURAL CONCRETE, BRIDGE FOOTING	395	CY
STRUCTURAL CONCRETE, BRIDGE	987	CY
STRUCTURAL CONCRETE, APPROACH SLAB (TYPE N)	200	CY
CONCRETE SURFACE TEXTURE	6,060	SQFT
FURNISH PRECAST PRESTRESSED CONCRETE GIRDER (70'-80')	16	EA
ERECT PRECAST PRESTRESSED CONCRETE GIRDER	16	EA
SNOWPLOW DEFLECTOR	44	EA
JOINT SEAL (MR 1")	197	LF
BAR REINFORCING STEEL (BRIDGE)	156,304	LB
BAR REINFORCING STEEL (EPOXY COATED) (BRIDGE)	60,525	LB
PREPARE AND STAIN CONCRETE	5,022	SQFT
CONCRETE BARRIER (TYPE 60A)	134	LF
CONCRETE BARRIER (TYPE 732 MODIFIED)	317	LF

NOTES:

Ⓐ Paint "Bridge No. 25-0150"
Ⓑ Paint "SLY PARK ROAD UC"
Ⓒ Approach Slab Type N(30S)
Ⓓ Sidewalk, see "ROAD PLANS"
Ⓔ Concrete Surface Texture
Ⓕ Snowplow Deflector
Ⓖ Bridge Mounted Sign, see "ROAD PLANS"

For "GENERAL NOTES" and "INDEX TO PLANS", see "INDEX TO PLANS NO. 1" sheet

For "PILE DATA TABLE", see "INDEX TO PLANS NO. 2" sheet

Joseph E Downing
DESIGN ENGINEER

	BY	CHECKED
DESIGN	Seung Pyo Hong	Eric G Burgeson
DETAILS	Nancy C Gwynn	Eric G Burgeson
QUANTITIES	Ashraf Ahmed	Seung Pyo Hong

LOAD & RESISTANCE FACTOR DESIGN — LIVE LOADING: HL93 W/"LOW-BOY"; PERMIT DESIGN VEHICLE

	BY	CHECKED
LAYOUT	Seung Pyo Hong	Eric G Burgeson
SPECIFICATIONS	Todd Geerts	Todd Geerts (PLANS AND SPECS COMPARED)

ORIGINAL SCALE IN INCHES FOR REDUCED PLANS 0 1 2 3

STATE OF CALIFORNIA
DEPARTMENT OF TRANSPORTATION

DIVISION OF ENGINEERING SERVICES
STRUCTURE DESIGN
DESIGN BRANCH 3

BRIDGE NO. 25-0150
POST MILE R031.30

SLY PARK ROAD UC (REPLACE)
GENERAL PLAN NO. 1

UNIT: 3578
PROJECT NUMBER & PHASE: 03000000721
CONTRACT NO.: 03-0F2201

DISREGARD PRINTS BEARING EARLIER REVISION DATES

REVISION DATES: 5-1-12 | 1-3-13 | 4-1-13

SHEET 1 OF 27

USERNAME => s124832 DATE PLOTTED => 01-AUG-2013 TIME PLOTTED => 13:07

FILE => 25-0150-a-gp01.dgn

STRUCTURES DESIGN GENERAL PLAN SHEET (ENGLISH) (REV.09-01-10)

DIST	COUNTY	ROUTE	POST MILES TOTAL PROJECT	SHEET No.	TOTAL SHEETS
03	ED	50	R30.7/R31.7	94	119

REGISTERED CIVIL ENGINEER 5-23-13 DATE

5-23-13
PLANS APPROVAL DATE

REGISTERED PROFESSIONAL ENGINEER Seung Pyo Hong No. 6-30-14 Exp. 75797 CIVIL STATE OF CALIFORNIA

The State of California or its officers or agents shall not be responsible for the accuracy or completeness of electronic copies of this plan sheet.

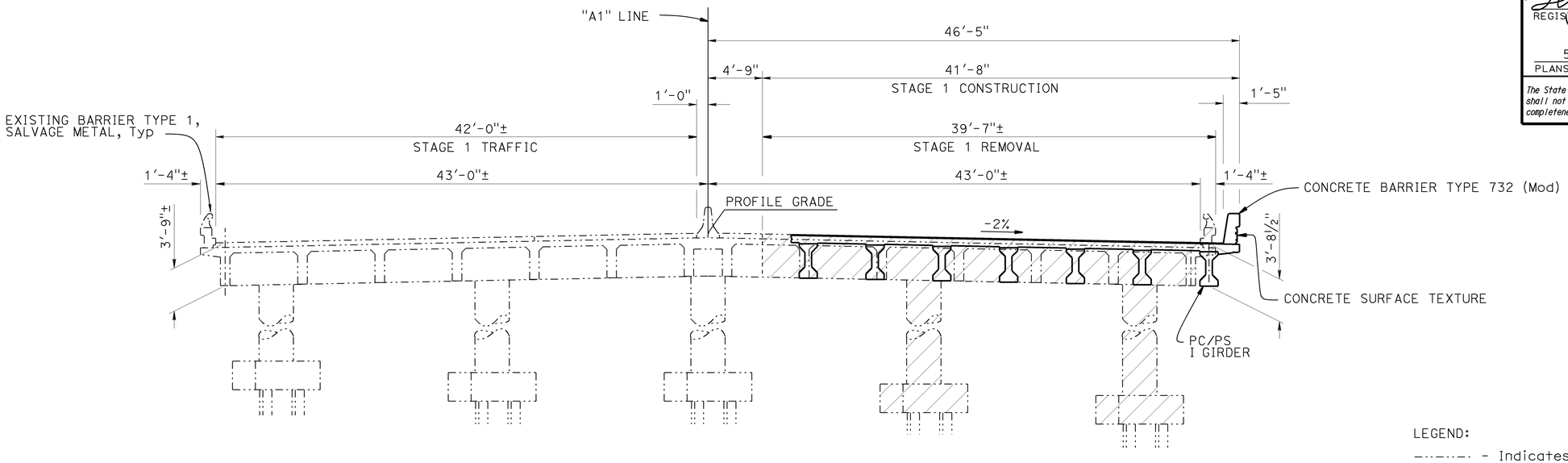

TYPICAL SECTION - STAGE 1

3/16" = 1'-0"

LEGEND:

- - - - - - - Indicates existing structure
——— Indicates new construction
/////// Indicates existing bridge concrete removal

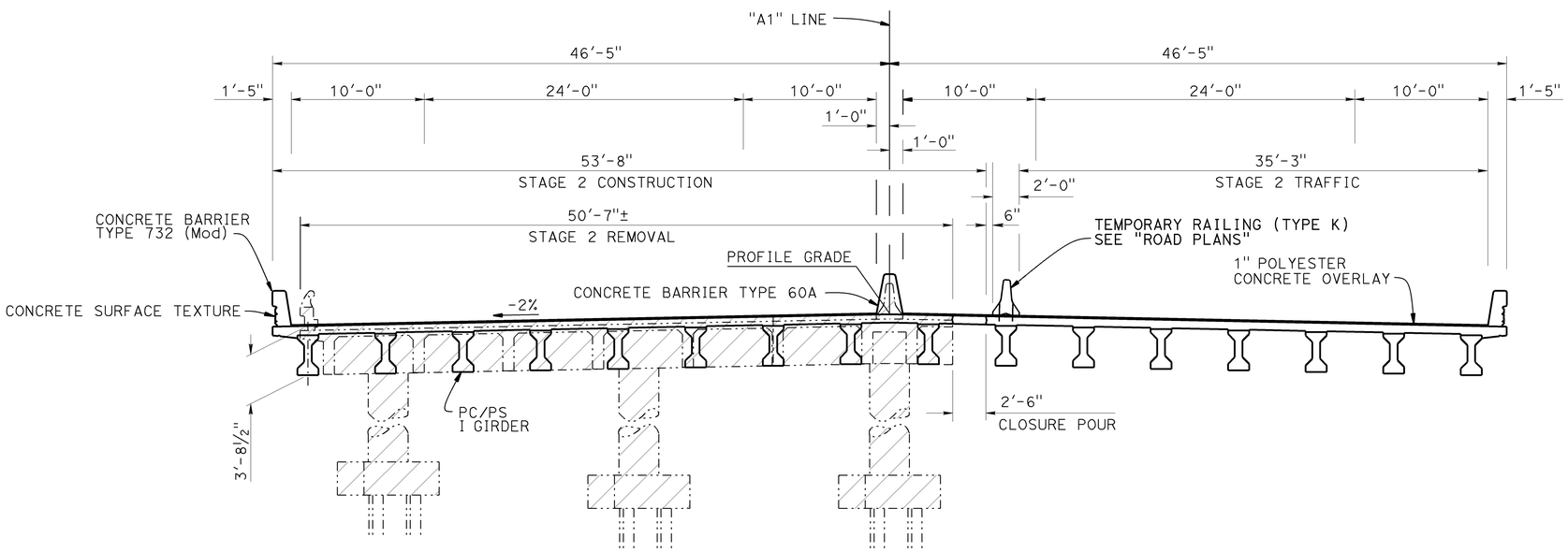

TYPICAL SECTION - STAGE 2

3/16" = 1'-0"

NOTE:
THE CONTRACTOR SHALL VERIFY ALL CONTROLLING FIELD DIMENSIONS BEFORE ORDERING OR FABRICATING ANY MATERIAL.

DESIGN	BY Seung Pyo Hong	CHECKED Eric G Burgeson	LOAD & RESISTANCE FACTOR DESIGN	LIVE LOADING: HL93 W/"LOW-BOY"; PERMIT DESIGN VEHICLE	
DETAILS	BY Nancy C Gwynn	CHECKED Eric G Burgeson	LAYOUT	BY Seung Pyo Hong	CHECKED Eric G Burgeson
QUANTITIES	BY Ashraf Ahmed	CHECKED Seung Pyo Hong	SPECIFICATIONS	BY Todd Geerts	PLANS AND SPECS COMPARED Todd Geerts

X
DESIGN ENGINEER

STATE OF CALIFORNIA
DEPARTMENT OF TRANSPORTATION

DIVISION OF ENGINEERING SERVICES
STRUCTURE DESIGN
DESIGN BRANCH 3

BRIDGE NO. 25-0150
POST MILE R031.30

SLY PARK ROAD UC (REPLACE)
GENERAL PLAN NO. 2

ORIGINAL SCALE IN INCHES FOR REDUCED PLANS 0 1 2 3

UNIT: 3578
PROJECT NUMBER & PHASE: 03000000721
CONTRACT NO.: 03-0F2201

DISREGARD PRINTS BEARING EARLIER REVISION DATES

REVISION DATES: 6-06-12 10-16-12 12-11-12 3-22-13

SHEET 2 OF 27

USERNAME => s124832 DATE PLOTTED => 01-AUG-2013 TIME PLOTTED => 13:07

FILE => 25-0150-a-gp02.dgn

DIST	COUNTY	ROUTE	POST MILES TOTAL PROJECT	SHEET No.	TOTAL SHEETS
03	ED	50	R30.7/R31.7	95	119

REGISTERED CIVIL ENGINEER 5-23-13 DATE

8-19-13
PLANS APPROVAL DATE

REGISTERED PROFESSIONAL ENGINEER Seung Pyo Hong No. 6-30-14 Exp. 75797 CIVIL STATE OF CALIFORNIA

The State of California or its officers or agents shall not be responsible for the accuracy or completeness of scanned copies of this plan sheet.

GENERAL NOTES
LOAD AND RESISTANCE FACTOR DESIGN

DESIGN:
AASHTO LRFD Bridge Design Specifications, 4th edition with the California Amendments

SEISMIC DESIGN:
Caltrans Seismic Design Criteria (SDC), Version 1.6 dated November 2010

DEAD LOAD:
Includes 35 psf for future wearing surface.

LIVE LOADING:
HL93 and permit design load

SEISMIC LOADING:
See "SITE SPECIFIC ARS CURVE"

REINFORCED CONCRETE:
fy = 60 ksi
f'c = 3.6 ksi @ 28 days
n = 8
See prestressing notes on "PRECAST PRESTRESSED I GIRDER" sheet

STRUCTURAL STEEL (new construction):
fy = 50 ksi (ASTM A709)

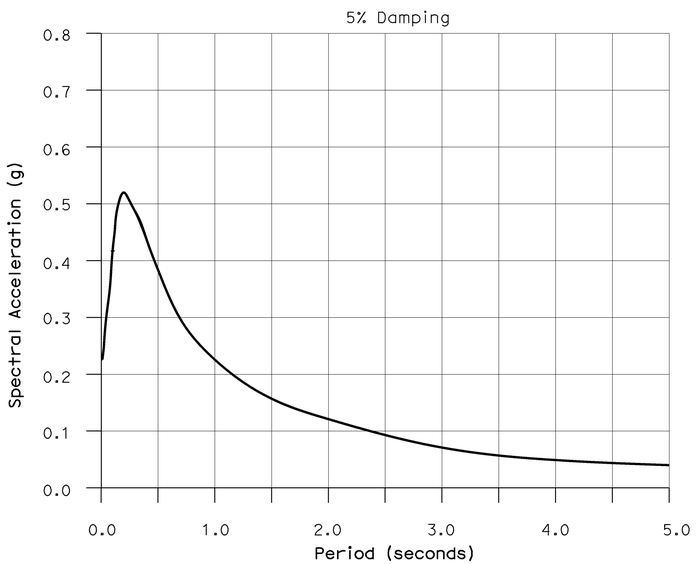

SITE SPECIFIC ARS CURVE
NO SCALE

INDEX TO PLANS

SHEET NO.	TITLE
1	GENERAL PLAN NO. 1
2	GENERAL PLAN NO. 2
3	INDEX TO PLANS NO. 1
4	INDEX TO PLANS NO. 2
5	DECK CONTOURS
6	FOUNDATION PLAN
7	ABUTMENT 1 LAYOUT
8	ABUTMENT 2 LAYOUT
9	ABUTMENT DETAILS NO. 1
10	ABUTMENT DETAILS NO. 2
11	ABUTMENT DETAILS NO. 3
12	RETAINING WALL DETAILS NO. 1
13	RETAINING WALL DETAILS NO. 2
14	TYPICAL SECTION
15	GIRDER LAYOUT
16	GIRDER DETAILS
17	CONCRETE REMOVAL DETAILS
18	SNOWPLOW DEFLECTOR DETAILS
19	PRECAST PRESTRESSED I GIRDER
20	CONCRETE SURFACE TEXTURE DETAILS
21	STRUCTURE APPROACH TYPE N(30S)
22	STRUCTURE APPROACH DRAINAGE DETAILS
23	LOG OF TEST BORINGS 1 OF 5
24	LOG OF TEST BORINGS 2 OF 5
25	LOG OF TEST BORINGS 3 OF 5
26	LOG OF TEST BORINGS 4 OF 5
27	LOG OF TEST BORINGS 5 OF 5

STANDARD PLANS Dated 2010

A10A	ABBREVIATIONS (SHEET 1 OF 2)
RSP A10B	ABBREVIATIONS (SHEET 2 OF 2)
A10C	LINES AND SYMBOLS (SHEET 1 OF 3)
A10D	LINES AND SYMBOLS (SHEET 2 OF 3)
A10E	LINES AND SYMBOLS (SHEET 3 OF 3)
A10F	LEGEND - SOIL (SHEET 1 OF 2)
A10G	LEGEND - SOIL (SHEET 2 OF 2)
A10H	LEGEND - ROCK
A62C	LIMITS OF PAYMENT FOR EXCAVATION AND BACKFILL BRIDGE
A76A	CONCRETE BARRIER TYPE 60
BO-1	BRIDGE DETAILS
BO-3	BRIDGE DETAILS
BO-5	BRIDGE DETAILS
BO-13	BRIDGE DETAILS
RSP B3-1A	RETAINING WALL TYPE 1 (CASE 1)
RSP B3-5	RETAINING WALL DETAILS NO. 1
B6-21	JOINT SEALS (MAXIMUM MOVEMENT RATING = 2")
RSP B11-55	CONCRETE BARRIER TYPE 732

STANDARD PLAN SHEET No.

DETAIL No.

	BY	CHECKED
DESIGN	Seung Pyo Hong	Eric G Burgeson
DETAILS	Nancy C Gwynn	Eric G Burgeson
QUANTITIES	Ashraf Ahmed	Seung Pyo Hong

STATE OF CALIFORNIA
DEPARTMENT OF TRANSPORTATION

DIVISION OF ENGINEERING SERVICES
STRUCTURE DESIGN
DESIGN BRANCH 3

BRIDGE NO. 25-0150
POST MILE R031.30

SLY PARK ROAD UC (REPLACE)
INDEX TO PLANS NO. 1

STRUCTURES DESIGN DETAIL SHEET (ENGLISH) (REV. 09-01-10)

ORIGINAL SCALE IN INCHES FOR REDUCED PLANS 0 1 2 3

UNIT: 3578
PROJECT NUMBER & PHASE: 03000000721
CONTRACT NO.: 03-0F2201

DISREGARD PRINTS BEARING EARLIER REVISION DATES

REVISION DATES 12-14-12 12-14-12 4-11-13

SHEET 3 OF 27

FILE => 25-0150-a-itp01.dgn

USERNAME => s124832 DATE PLOTTED => 01-AUG-2013 TIME PLOTTED => 13:07

DIST	COUNTY	ROUTE	POST MILES TOTAL PROJECT	SHEET No.	TOTAL SHEETS
03	ED	50	R30.7/R31.7	96	119

REGISTERED CIVIL ENGINEER 5-23-13 DATE

8-19-13
PLANS APPROVAL DATE

REGISTERED PROFESSIONAL ENGINEER Seung Pyo Hong No. 6-30-14 Exp. 75797 CIVIL STATE OF CALIFORNIA

The State of California or its officers or agents shall not be responsible for the accuracy or completeness of scanned copies of this plan sheet.

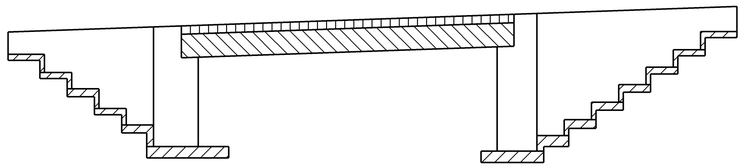

- Structural Concrete, Bridge
- Structural Concrete, Bridge Footing
- Prestressed I Girder, see "PRESTRESSED I GIRDER" sheet
- Structural Concrete, Bridge (5.0 ksi @ 28 days)

CONCRETE STRENGTH AND TYPE LIMITS

NO SCALE

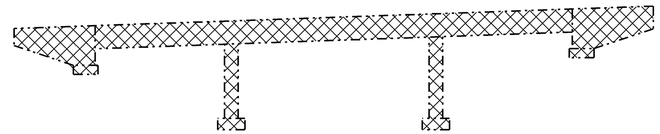

- Limits of Bridge Removal (Existing)

NOTE:
For Abutment removal limits, see "CONCRETE REMOVAL DETAILS" sheet

LIMITS OF EXISTING BRIDGE REMOVAL

NO SCALE

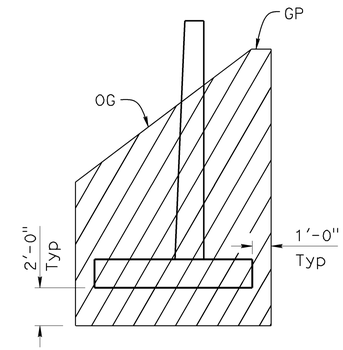

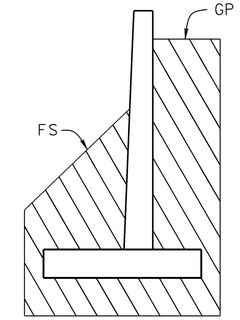

- Structure Excavation
- Structure Backfill

LIMITS OF PAYMENT FOR STRUCTURE EXCAVATION & BACKFILL AT RETAINING WALLS

NO SCALE

PILE DATA TABLE

Location	Stage	Pile Type (kips)	Nominal Resistance		Design Tip Elevation (ft)	Specified Tip Elevation (ft)	Nominal Driving Resistance (kips)
			Compression (kips)	Tension (kips)			
Abutment 1	Stage 2	HP 14X117	400	0	3919 (a)	3919	400
	Stage 1	HP 14X117	400	0	3924 (a)	3924	400
Abutment 2	Stage 2	HP 14X117	400	0	3922 (a)	3922	400
	Stage 1	HP 14X117	400	0	3922 (a)	3922	400

Note:
Design Tip Elevations are controlled by (a) Compression

	BY	CHECKED
DESIGN	Seung Pyo Hong	Eric G Burgeson
DETAILS	Nancy C Gwynn	Eric G Burgeson
QUANTITIES	Ashraf Ahmed	Seung Pyo Hong

STATE OF CALIFORNIA
DEPARTMENT OF TRANSPORTATION

DIVISION OF ENGINEERING SERVICES
STRUCTURE DESIGN
DESIGN BRANCH 3

BRIDGE NO. 25-0150
POST MILE R031.30

SLY PARK ROAD UC (REPLACE)
INDEX TO PLANS NO. 2

STRUCTURES DESIGN DETAIL SHEET (ENGLISH) (REV. 09-01-10)

ORIGINAL SCALE IN INCHES FOR REDUCED PLANS 0 1 2 3

UNIT: 3578
PROJECT NUMBER & PHASE: 03000000721
CONTRACT NO.: 03-0F2201

DISREGARD PRINTS BEARING EARLIER REVISION DATES

REVISION DATES 12-4-12 4-10-13 5-22-13

SHEET 4 OF 27

FILE => 25-0150-a-itp02.dgn

USERNAME => s124832 DATE PLOTTED => 01-AUG-2013 TIME PLOTTED => 13:07

DIST	COUNTY	ROUTE	POST MILES TOTAL PROJECT	SHEET No.	TOTAL SHEETS
03	ED	50	R30.7/R31.7	97	119

REGISTERED CIVIL ENGINEER 5-23-13 DATE

8-19-13
PLANS APPROVAL DATE

REGISTERED PROFESSIONAL ENGINEER Seung Pyo Hong No. 6-30-14 Exp. 75797 CIVIL STATE OF CALIFORNIA

The State of California or its officers or agents shall not be responsible for the accuracy or completeness of scanned copies of this plan sheet.

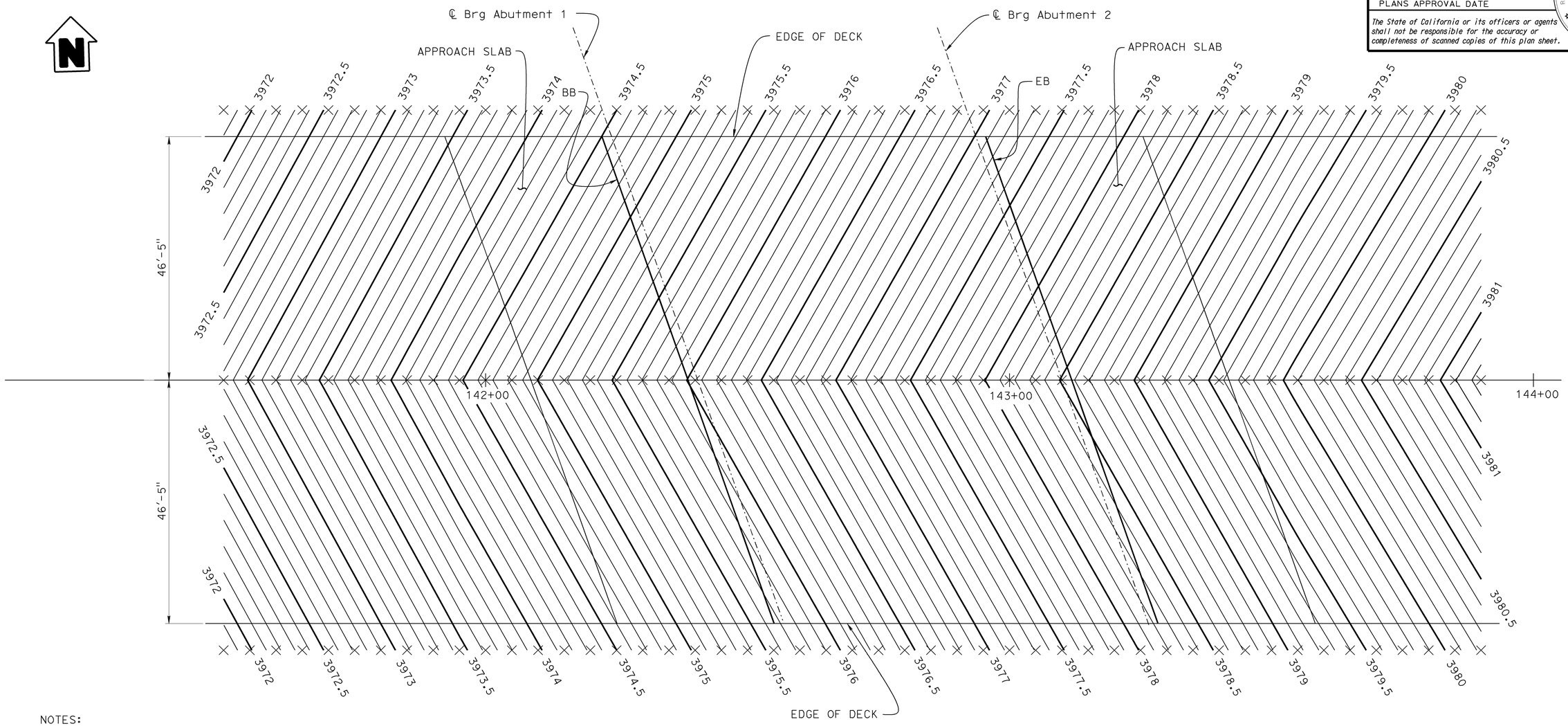

NOTES:

1. Top of polyester concrete overlay shall match the profile grade. The contours shown are for top of concrete deck and approach slab and have been adjusted by lowering 1" from the profile grade
2. Contours are at 0.1' intervals
3. Contours do not include camber

LEGEND:

X - Indicates 5' intervals along Station Line

PLAN
1" = 10'

	BY	CHECKED
DESIGN	Seung Pyo Hong	Eric G Burgeson
DETAILS	Nancy C Gwynn	Eric G Burgeson
QUANTITIES	Ashraf Ahmed	Seung Pyo Hong

STATE OF CALIFORNIA
DEPARTMENT OF TRANSPORTATION

DIVISION OF ENGINEERING SERVICES
STRUCTURE DESIGN
DESIGN BRANCH 3

BRIDGE NO. 25-0150
POST MILE R031.30

SLY PARK ROAD UC (REPLACE)
DECK CONTOURS

STRUCTURES DESIGN DETAIL SHEET (ENGLISH) (REV. 09-01-10)

ORIGINAL SCALE IN INCHES FOR REDUCED PLANS 0 1 2 3

UNIT: 3578
PROJECT NUMBER & PHASE: 03000000721
CONTRACT NO.: 03-0F2201

DISREGARD PRINTS BEARING EARLIER REVISION DATES

REVISION DATES: 8-23-12

SHEET 5 OF 27

FILE => 25-0150-d-dc.dgn

USERNAME => s124632 DATE PLOTTED => 01-AUG-2013 TIME PLOTTED => 13:07

DIST	COUNTY	ROUTE	POST MILES TOTAL PROJECT	SHEET No.	TOTAL SHEETS
03	ED	50	R30.7/R31.7	98	119

REGISTERED CIVIL ENGINEER 5-23-13 DATE

8-19-13
PLANS APPROVAL DATE

REGISTERED PROFESSIONAL ENGINEER SEUNG PYO HONG No. 75797 Exp. 6-30-13 CIVIL STATE OF CALIFORNIA

The State of California or its officers or agents shall not be responsible for the accuracy or completeness of electronic copies of this plan sheet.

CURVE DATA

No.	R	Δ	T	L
Ⓐ	10000.00	2°29′02″	216.79	433.52

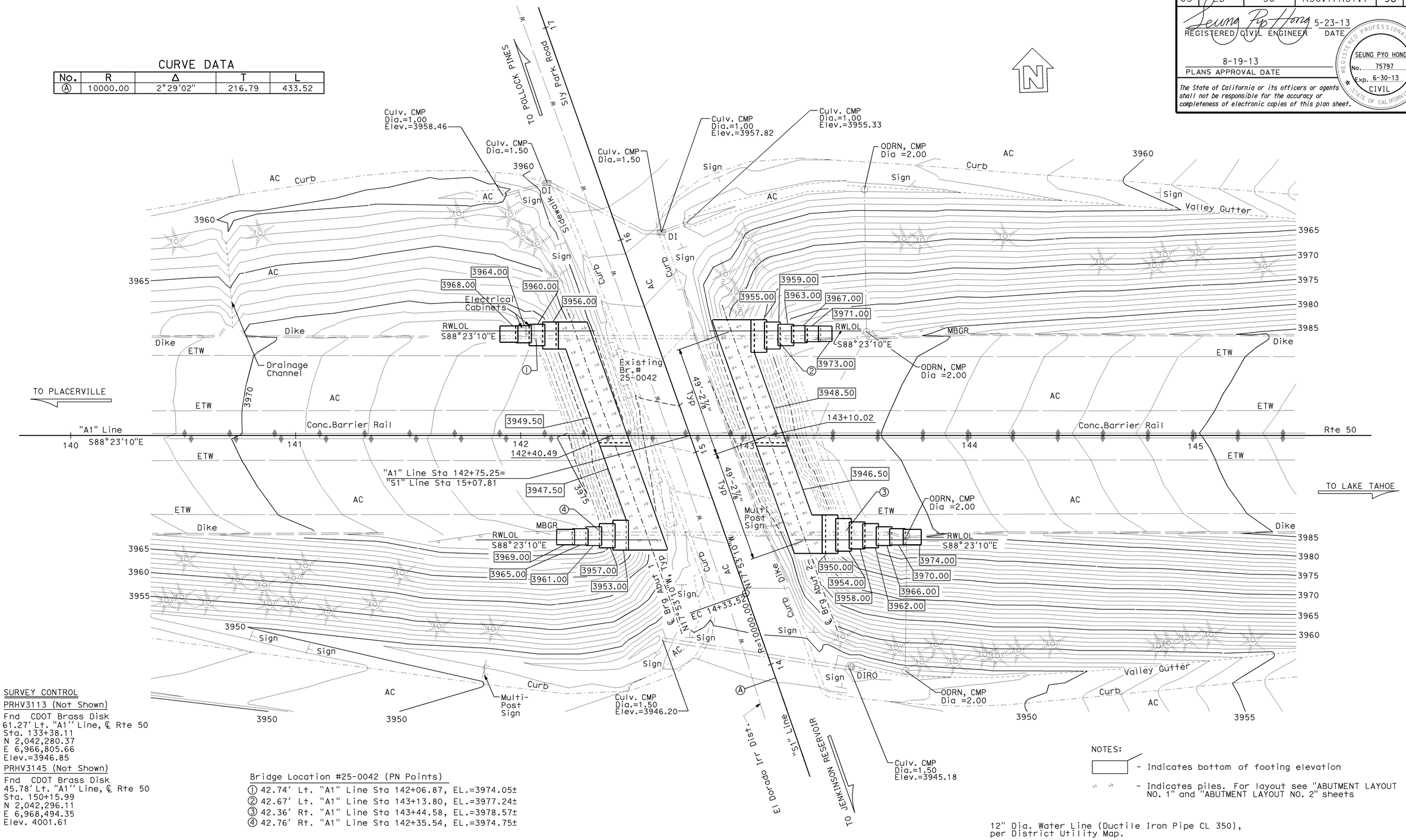

SURVEY CONTROL

PRHV3113 (Not Shown)

Fnd CDOT Brass Disk
61.27′ Lt. "A1" Line, ℄ Rte 50
Sta. 133+38.11
N 2,042,280.37
E 6,966,805.66
Elev.=3946.85

PRHV3145 (Not Shown)

Fnd CDOT Brass Disk
45.78′ Lt. "A1" Line, ℄ Rte 50
Sta. 150+15.99
N 2,042,296.11
E 6,968,494.35
Elev. 4001.61

Bridge Location #25-0042 (PN Points)

① 42.74′ Lt. "A1" Line Sta 142+06.87, EL.=3974.05±
② 42.67′ Lt. "A1" Line Sta 143+13.80, EL.=3977.24±
③ 42.36′ Rt. "A1" Line Sta 142+44.58, EL.=3978.57±
④ 42.76′ Rt. "A1" Line Sta 142+35.54, EL.=3974.75±

NOTES:

▭ - Indicates bottom of footing elevation

- Indicates piles. For layout see "ABUTMENT LAYOUT NO. 1" and "ABUTMENT LAYOUT NO. 2" sheets

12" Dia. Water Line (Ductile Iron Pipe CL 350), per District Utility Map.

PRELIMINARY INVESTIGATION SECTION									
SCALE 1"=20′	VERT.DATUM NAVD29	PHOTOGRAMMETRY AS OF: X				DESIGN	BY Seung Pyo Hong	CHECKED Eric G Burgeson
	HORZ.DATUM NAD83 (1991.35)	SURVEYED	BY X	CHECKED	BY J. Pallares 05/2012	DETAILS	BY Nancy C Gwynn	CHECKED Eric G Burgeson
	ALIGNMENT TIES Dist. Traverse Sheet	DRAFTED	BY S. Zheng 05/2012	CHECKED	BY L. Lew 05/2012	QUANTITIES	BY Seung Pyo Hong	CHECKED Ashraf Ahmed

STRUCTURES FOUNDATION PLAN SHEET (ENGLISH) (REV. 09-01-10)

ORIGINAL SCALE IN INCHES FOR REDUCED PLANS 0 1 2 3

STATE OF CALIFORNIA
DEPARTMENT OF TRANSPORTATION

DIVISION OF ENGINEERING SERVICES
STRUCTURE DESIGN
DESIGN BRANCH 3

BRIDGE NO. 25-0150
POST MILE R031.30

SLY PARK ROAD UC (REPLACE)
FOUNDATION PLAN

UNIT: 3646
PROJECT NUMBER & PHASE: 03000000721
CONTRACT NO.: 03-0F2201

DISREGARD PRINTS BEARING EARLIER REVISION DATES

REVISION DATES 5/2/12 5/2/12 1/8/13

SHEET 6 OF 27

FILE => 25-0150-e-fpl01.dgn

USERNAME => s123482 DATE PLOTTED => 01-AUG-2013 TIME PLOTTED => 13:07

DIST	COUNTY	ROUTE	POST MILES TOTAL PROJECT	SHEET No.	TOTAL SHEETS
03	ED	50	R30.7/R31.7	99	119

REGISTERED CIVIL ENGINEER 5-23-13 DATE

8-19-13
PLANS APPROVAL DATE

REGISTERED PROFESSIONAL ENGINEER SEUNG PYO HONG No. 75797 Exp. 6-30-13 CIVIL STATE OF CALIFORNIA

The State of California or its officers or agents shall not be responsible for the accuracy or completeness of scanned copies of this plan sheet.

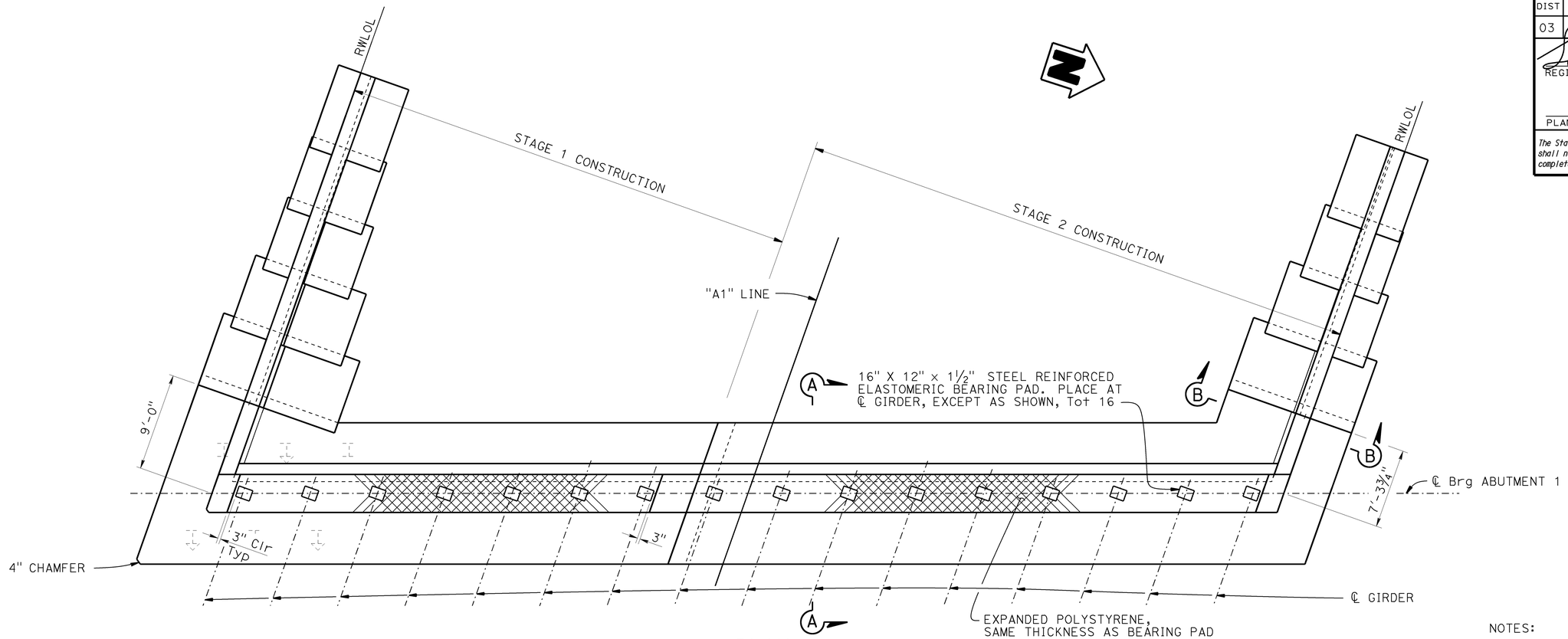

PLAN

3/16" = 1'-0"

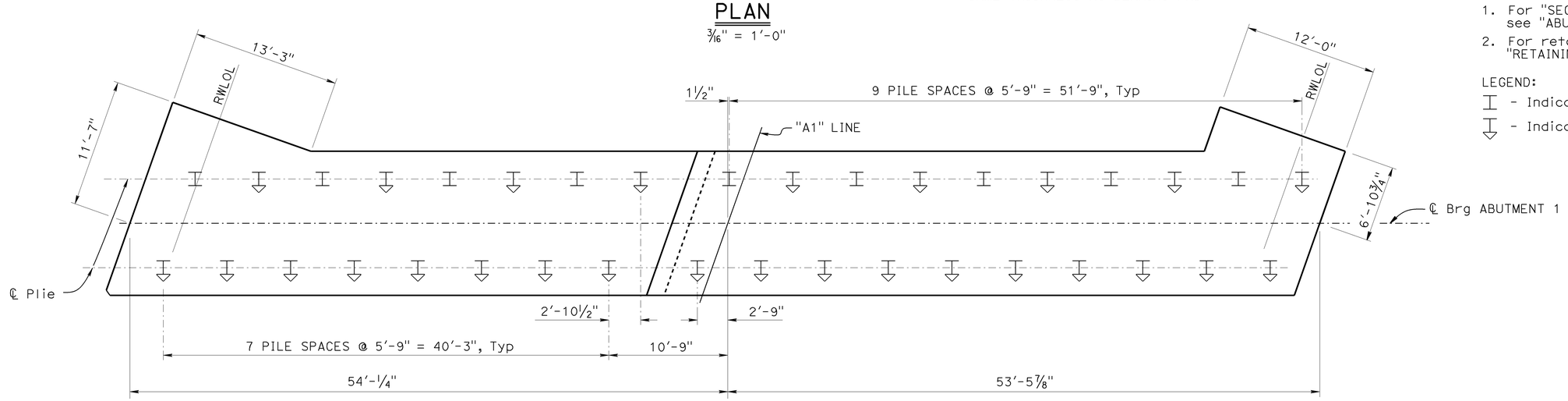

FOOTING PLAN

3/16" = 1'-0"

NOTES:

1. For "SECTION A-A" and "SECTION B-B", see "ABUTMENT DETAILS NO. 1" sheet
2. For retaining wall details, see "RETAINING WALL DETAILS NO. 1" sheet

LEGEND:

I - Indicates vertical pile

I - Indicates battered pile 1:3

DESIGN	BY Seung Pyo Hong	CHECKED Eric G Burgeson	
DETAILS	BY Nancy C Gwynn	CHECKED Eric G Burgeson	
QUANTITIES	BY Ashraf Ahmed	CHECKED Seung Pyo Hong	

STATE OF CALIFORNIA
DEPARTMENT OF TRANSPORTATION

DIVISION OF ENGINEERING SERVICES
STRUCTURE DESIGN
DESIGN BRANCH 3

BRIDGE NO. 25-0150
POST MILE R031.30

SLY PARK ROAD UC (REPLACE)
ABUTMENT 1 LAYOUT

STRUCTURES DESIGN DETAIL SHEET (ENGLISH) (REV. 09-01-10)

ORIGINAL SCALE IN INCHES FOR REDUCED PLANS 0 1 2 3

UNIT: 3578
PROJECT NUMBER & PHASE: 03000000721
CONTRACT NO.: 03-0F2201

DISREGARD PRINTS BEARING EARLIER REVISION DATES

REVISION DATES 10-26-12 3-8-13 4-10-13

SHEET 7 OF 27

FILE => 25-0150-f-ab01lo.dgn

USERNAME => s124832 DATE PLOTTED => 01-AUG-2013 TIME PLOTTED => 13:07

DIST	COUNTY	ROUTE	POST MILES TOTAL PROJECT	SHEET No.	TOTAL SHEETS
03	ED	50	R30.7/R31.7	100	119

REGISTERED CIVIL ENGINEER 5-23-13 DATE

8-19-13
PLANS APPROVAL DATE

REGISTERED PROFESSIONAL ENGINEER SEUNG PYO HONG No. 75797 Exp. 6-30-13 CIVIL STATE OF CALIFORNIA

The State of California or its officers or agents shall not be responsible for the accuracy or completeness of scanned copies of this plan sheet.

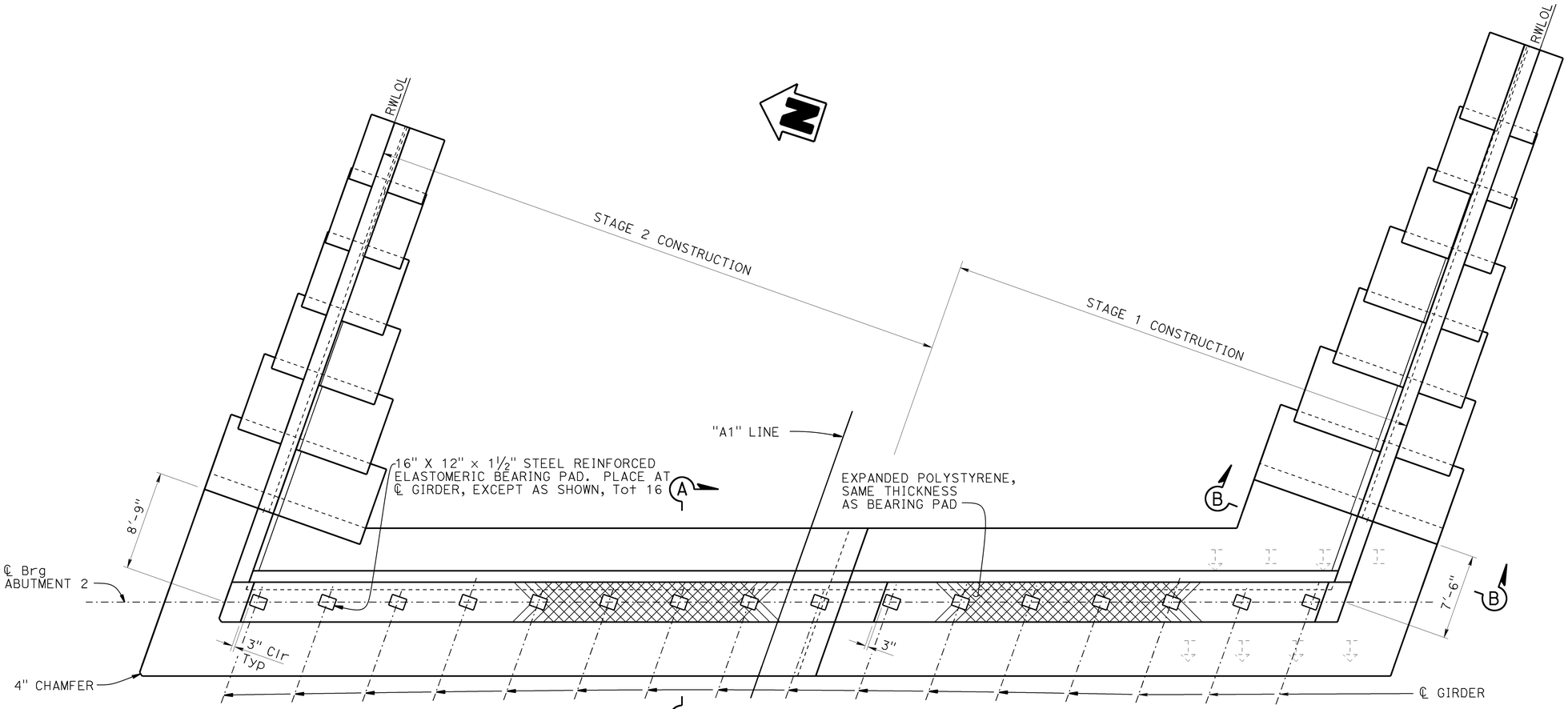

PLAN

3/16" = 1'-0"

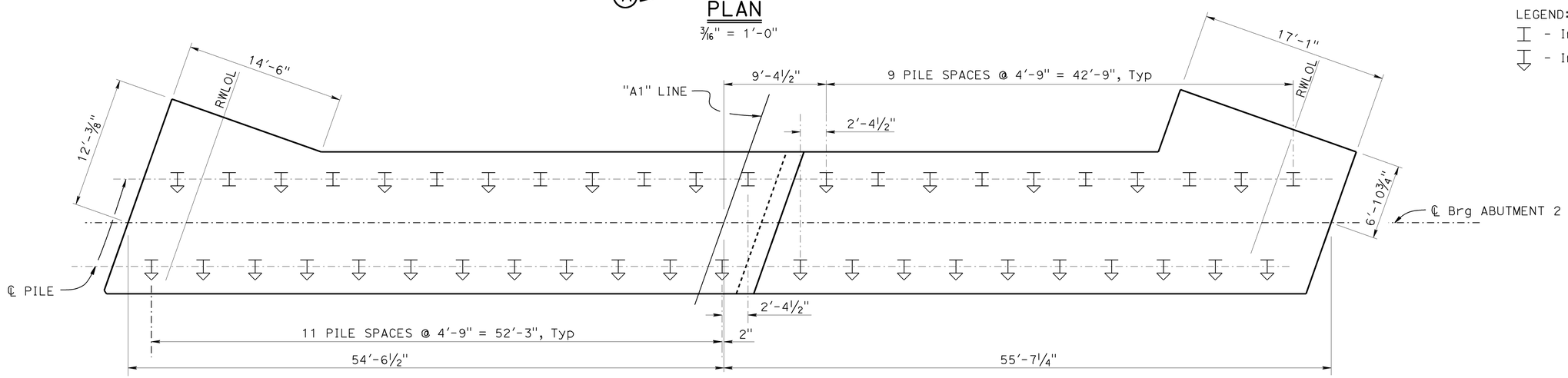

FOOTING PLAN

3/16" = 1'-0"

NOTES:

1. For "SECTION A-A" and "SECTION B-B", see "ABUTMENT DETAILS NO. 1" sheet
2. For retaining wall details, see "RETAINING WALL DETAILS NO. 2" sheet

LEGEND:

I - Indicates vertical pile

I - Indicates battered pile 1:3

	BY	CHECKED
DESIGN	Seung Pyo Hong	Eric G Burgeson
DETAILS	Nancy C Gwynn	Eric G Burgeson
QUANTITIES	Ashraf Ahmed	Seung Pyo Hong

STATE OF CALIFORNIA
DEPARTMENT OF TRANSPORTATION

DIVISION OF ENGINEERING SERVICES
STRUCTURE DESIGN
DESIGN BRANCH 3

BRIDGE NO. 25-0150
POST MILE R031.30

SLY PARK ROAD UC (REPLACE)
ABUTMENT 2 LAYOUT

STRUCTURES DESIGN DETAIL SHEET (ENGLISH) (REV. 09-01-10)

ORIGINAL SCALE IN INCHES FOR REDUCED PLANS 0 1 2 3

UNIT: 3578
PROJECT NUMBER & PHASE: 03000000721
CONTRACT NO.: 03-0F2201

DISREGARD PRINTS BEARING EARLIER REVISION DATES

REVISION DATES: 10-26-12 | 3-28-13 | 4-10-13

SHEET 8 OF 27

FILE => 25-0150-f-ab02lo.dgn

USERNAME => s124832 DATE PLOTTED => 01-AUG-2013 TIME PLOTTED => 13:07

DIST	COUNTY	ROUTE	POST MILES TOTAL PROJECT	SHEET No.	TOTAL SHEETS
03	ED	50	R30.7/R31.7	101	119

REGISTERED CIVIL ENGINEER 5-23-13 DATE

8-19-13
PLANS APPROVAL DATE

REGISTERED PROFESSIONAL ENGINEER SEUNG PYO HONG No. 75797 Exp. 6-30-13 CIVIL STATE OF CALIFORNIA

The State of California or its officers or agents shall not be responsible for the accuracy or completeness of scanned copies of this plan sheet.

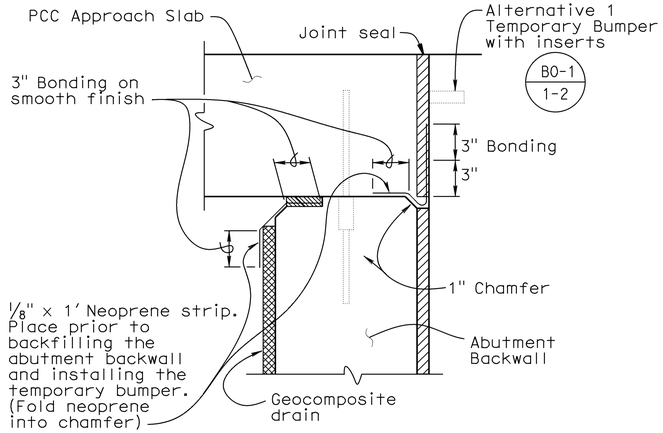

JOINT PROTECTION DETAIL

No Scale

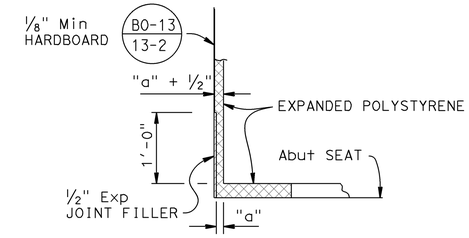

DETAIL D

No Scale

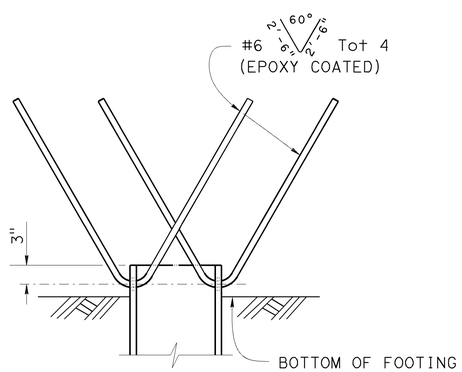

ELEVATION

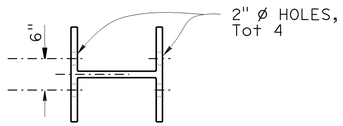

PLAN

STEEL PILE ANCHOR

NO SCALE

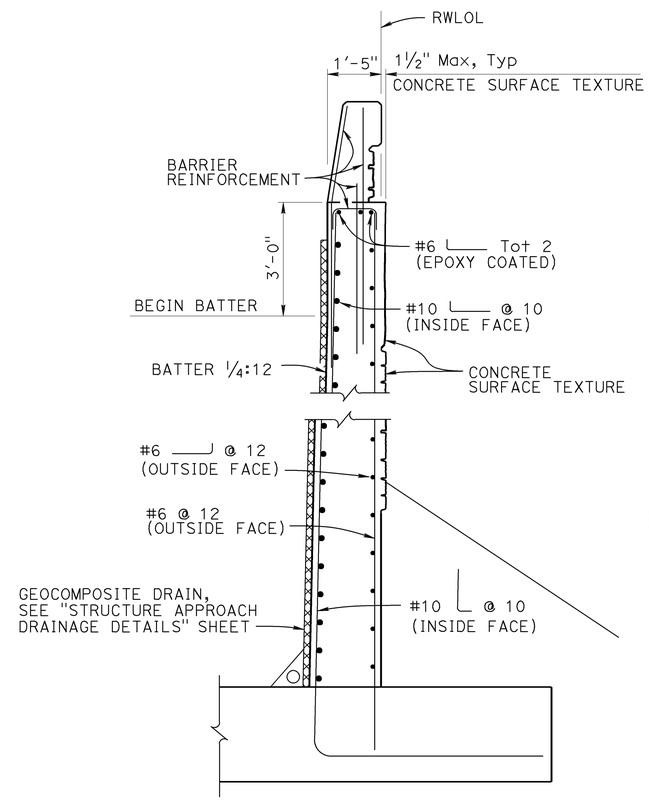

NOTES:

1. Footing reinforcement and piles not shown
2. For barrier reinforcement see "SECTION A-A", "RETAINING WALL DETAILS NO. 1" sheet

SECTION B-B

1/2" = 1'-0"

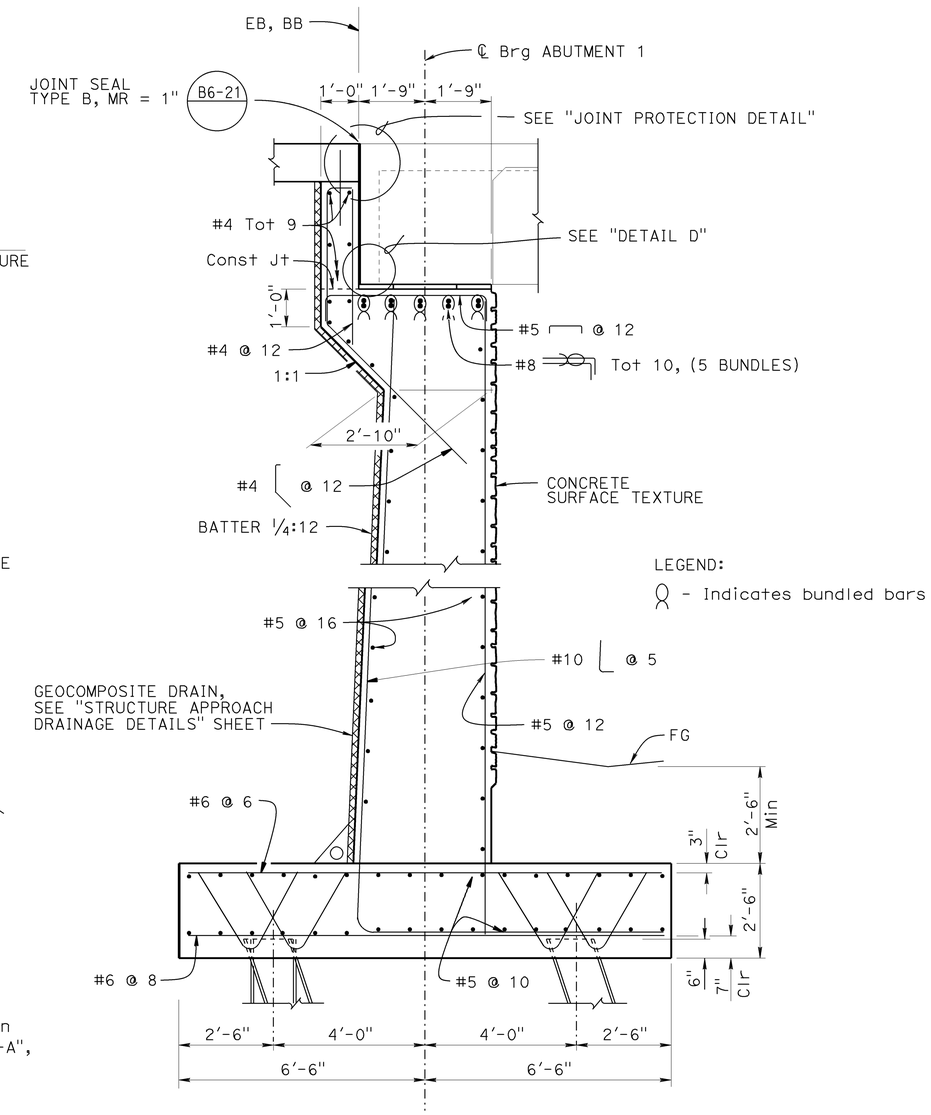

SECTION A-A

1/2" = 1'-0"

NOTE:
For Concrete Surface Texture Details, see "CONCRETE SURFACE TEXTURE DETAILS" sheet

	BY	CHECKED
DESIGN	Seung Pyo Hong	Eric G Burgeson
DETAILS	Nancy C Gwynn	Eric G Burgeson
QUANTITIES	Ashraf Ahmed	Seung Pyo Hong

STATE OF CALIFORNIA
DEPARTMENT OF TRANSPORTATION

DIVISION OF ENGINEERING SERVICES
STRUCTURE DESIGN
DESIGN BRANCH 3

BRIDGE NO. 25-0150
POST MILE R031.30

SLY PARK ROAD UC (REPLACE)
ABUTMENT DETAILS NO. 1

STRUCTURES DESIGN DETAIL SHEET (ENGLISH) (REV. 09-01-10)

ORIGINAL SCALE IN INCHES FOR REDUCED PLANS 0 1 2 3

UNIT: 3578
PROJECT NUMBER & PHASE: 03000000721
CONTRACT NO.: 03-0F2201

DISREGARD PRINTS BEARING EARLIER REVISION DATES

REVISION DATES 10-19-12 1-18-13 4-3-13

SHEET 9 OF 27

FILE => 25-0150-f-abdet01.dgn

USERNAME => s124832 DATE PLOTTED => 01-AUG-2013 TIME PLOTTED => 13:07

DIST	COUNTY	ROUTE	POST MILES TOTAL PROJECT	SHEET No.	TOTAL SHEETS
03	ED	50	R30.7/R31.7	102	119

REGISTERED CIVIL ENGINEER 5-23-13 DATE

8-19-13
PLANS APPROVAL DATE

REGISTERED PROFESSIONAL ENGINEER SEUNG PYO HONG No. 75797 Exp. 6-30-13 CIVIL STATE OF CALIFORNIA

The State of California or its officers or agents shall not be responsible for the accuracy or completeness of scanned copies of this plan sheet.

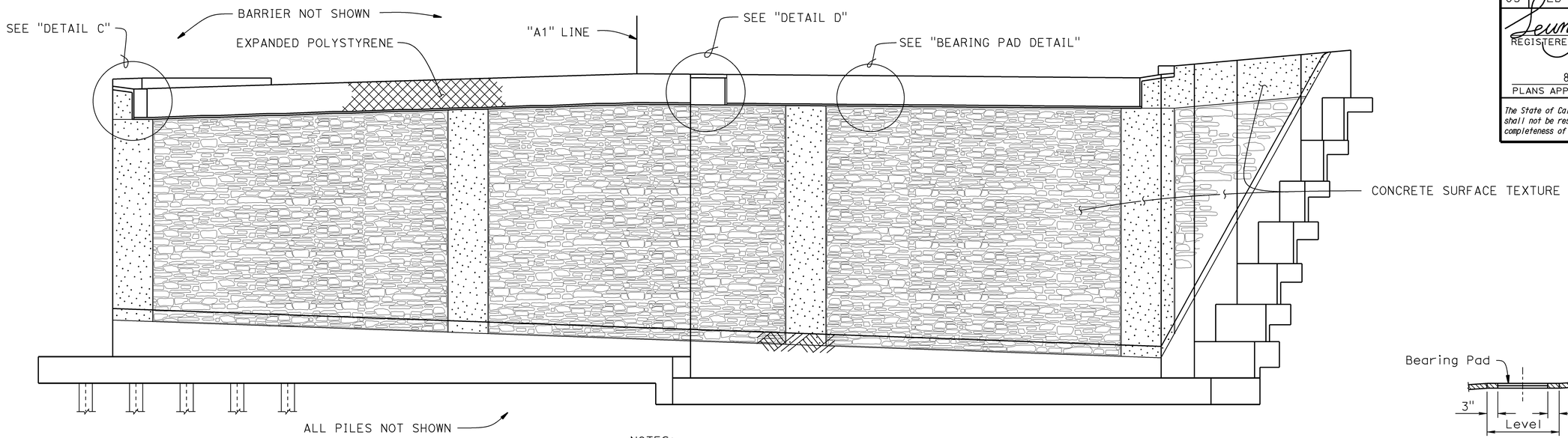

NOTES:
1. Abutment 2 shown, Abutment 1 similar
2. For "DETAIL C" and "DETAIL D", see "ABUTMENT DETAILS NO. 3" sheet
3. For Concrete Surface Texture Details, see "CONCRETE SURFACE TEXTURE DETAILS" sheet

ELEVATION
3/16" = 1'-0"

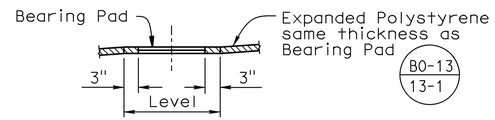

Details typical at all bearing pads

BEARING PAD DETAIL
No Scale

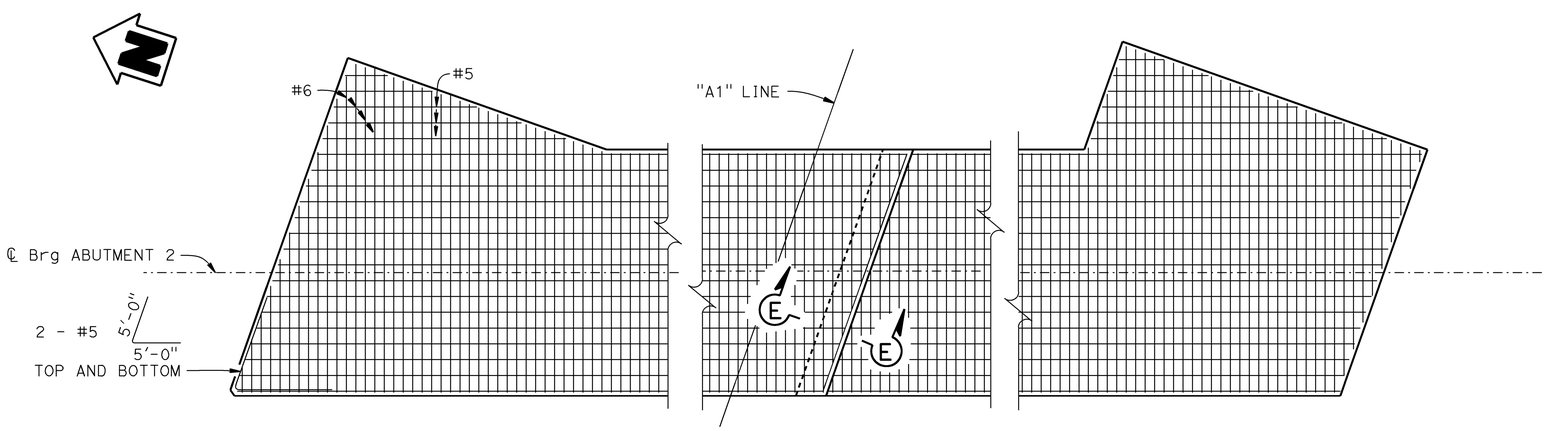

NOTES:
1. Piles not shown
2. Abutment 2 footing shown, Abutment 1 footing similar
3. For details not shown, see "ABUTMENT DETAILS NO. 1" sheet

PART FOOTING PLAN
1/4" = 1'-0"

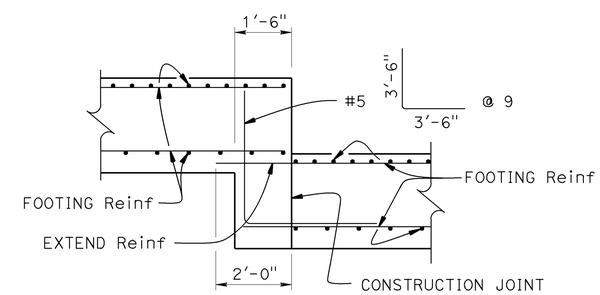

NOTE:
Piles not shown

SECTION E-E
1/2" = 1'-0"

	BY	CHECKED
DESIGN	Seung Pyo Hong	Eric G Burgeson
DETAILS	Nancy C Gwynn	Eric G Burgeson
QUANTITIES	Ashraf Ahmed	Seung Pyo Hong

STATE OF CALIFORNIA
DEPARTMENT OF TRANSPORTATION

DIVISION OF ENGINEERING SERVICES
STRUCTURE DESIGN
DESIGN BRANCH 3

BRIDGE NO. 25-0150
POST MILE R031.30

SLY PARK ROAD UC (REPLACE)
ABUTMENT DETAILS NO. 2

STRUCTURES DESIGN DETAIL SHEET (ENGLISH) (REV. 09-01-10)

ORIGINAL SCALE IN INCHES FOR REDUCED PLANS 0 1 2 3

UNIT: 3578
PROJECT NUMBER & PHASE: 03000000721
CONTRACT NO.: 03-0F2201

DISREGARD PRINTS BEARING EARLIER REVISION DATES

REVISION DATES: 10-31-12 4-3-13 3-22-13

SHEET 10 OF 27

FILE => 25-0150-f-abdet02.dgn

USERNAME => s124832 DATE PLOTTED => 01-AUG-2013 TIME PLOTTED => 13:07

DIST	COUNTY	ROUTE	POST MILES TOTAL PROJECT	SHEET No.	TOTAL SHEETS
03	ED	50	R30.7/R31.7	103	119

REGISTERED CIVIL ENGINEER 5-23-13 DATE

8-19-13
PLANS APPROVAL DATE

REGISTERED PROFESSIONAL ENGINEER SEUNG PYO HONG No. 75797 Exp. 6-30-13 CIVIL STATE OF CALIFORNIA

The State of California or its officers or agents shall not be responsible for the accuracy or completeness of scanned copies of this plan sheet.

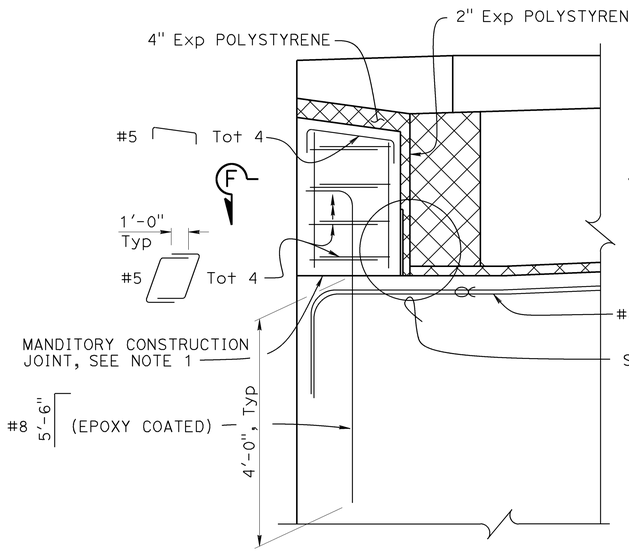

DETAIL C

3/4" = 1'-0"

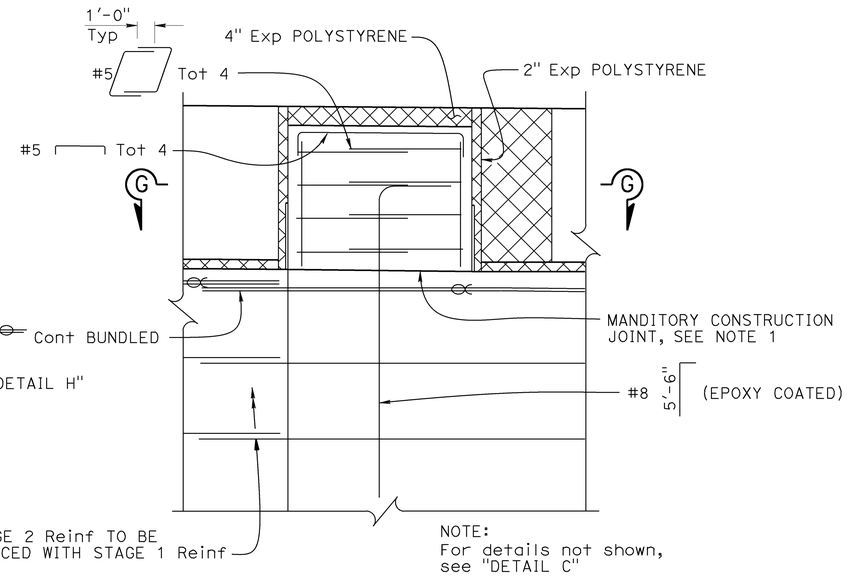

DETAIL D

3/4" = 1'-0"

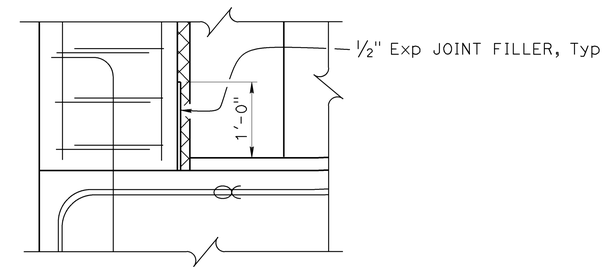

DETAIL H

1" = 1'-0"

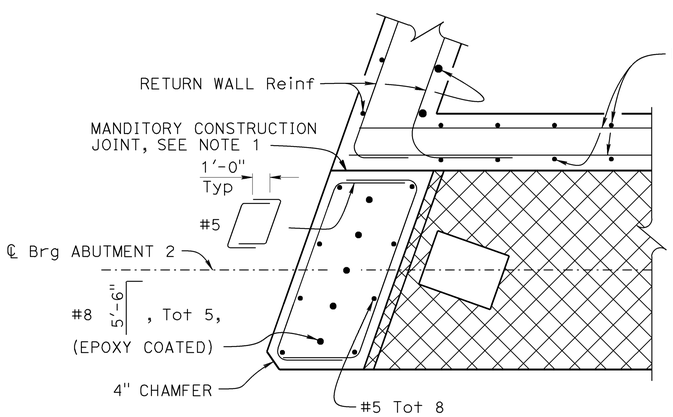

SECTION F-F

3/4" = 1'-0"

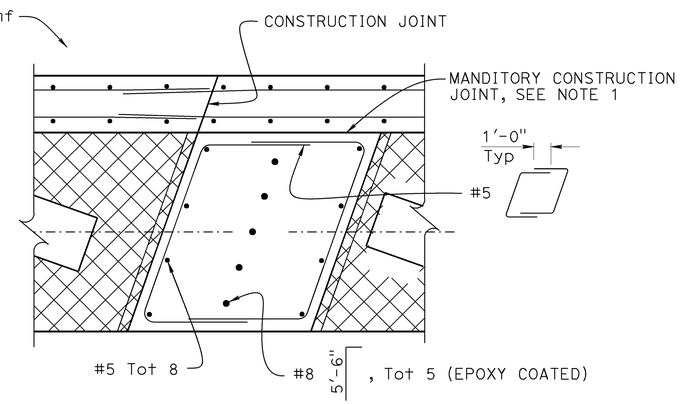

SECTION G-G

3/4" = 1'-0"

NOTES:

1. Mandatory Construction Joint surface to be smooth finished and lined with construction paper
2. Concrete Surface Texture not shown

DESIGN	BY Seung Pyo Hong	CHECKED Eric G Burgeson	
DETAILS	BY Nancy C Gwynn	CHECKED Eric G Burgeson	
QUANTITIES	BY Ashraf Ahmed	CHECKED Seung Pyo Hong	

STATE OF CALIFORNIA
DEPARTMENT OF TRANSPORTATION

DIVISION OF ENGINEERING SERVICES
STRUCTURE DESIGN
DESIGN BRANCH 3

BRIDGE NO. 25-0150
POST MILE R031.30

SLY PARK ROAD UC (REPLACE)
ABUTMENT DETAIL NO. 3

STRUCTURES DESIGN DETAIL SHEET (ENGLISH) (REV. 09-01-10)

ORIGINAL SCALE IN INCHES FOR REDUCED PLANS 0 1 2 3

UNIT: 3578
PROJECT NUMBER & PHASE: 03000000721
CONTRACT NO.: 03-0F2201

DISREGARD PRINTS BEARING EARLIER REVISION DATES

REVISION DATES 10-31-12 1-16-13 4-16-13

SHEET 11 OF 27

FILE => 25-0150-f-abdet03.dgn

USERNAME => s124632 DATE PLOTTED => 01-AUG-2013 TIME PLOTTED => 13:07

DIST	COUNTY	ROUTE	POST MILES TOTAL PROJECT	SHEET No.	TOTAL SHEETS
03	ED	50	R30.7/R31.7	104	119

REGISTERED CIVIL ENGINEER 5-23-13 DATE

8-19-13
PLANS APPROVAL DATE

REGISTERED PROFESSIONAL ENGINEER SEUNG PYO HONG No. 75797 Exp. 6-30-13 CIVIL STATE OF CALIFORNIA

The State of California or its officers or agents shall not be responsible for the accuracy or completeness of scanned copies of this plan sheet.

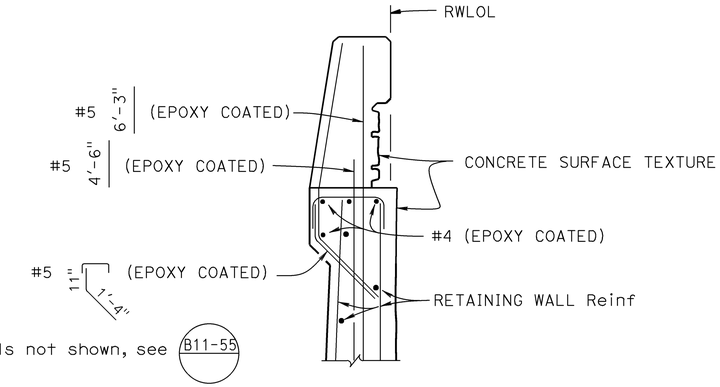

NOTE:
For details not shown, see B11-55

SECTION A-A
3/4" = 1'-0"

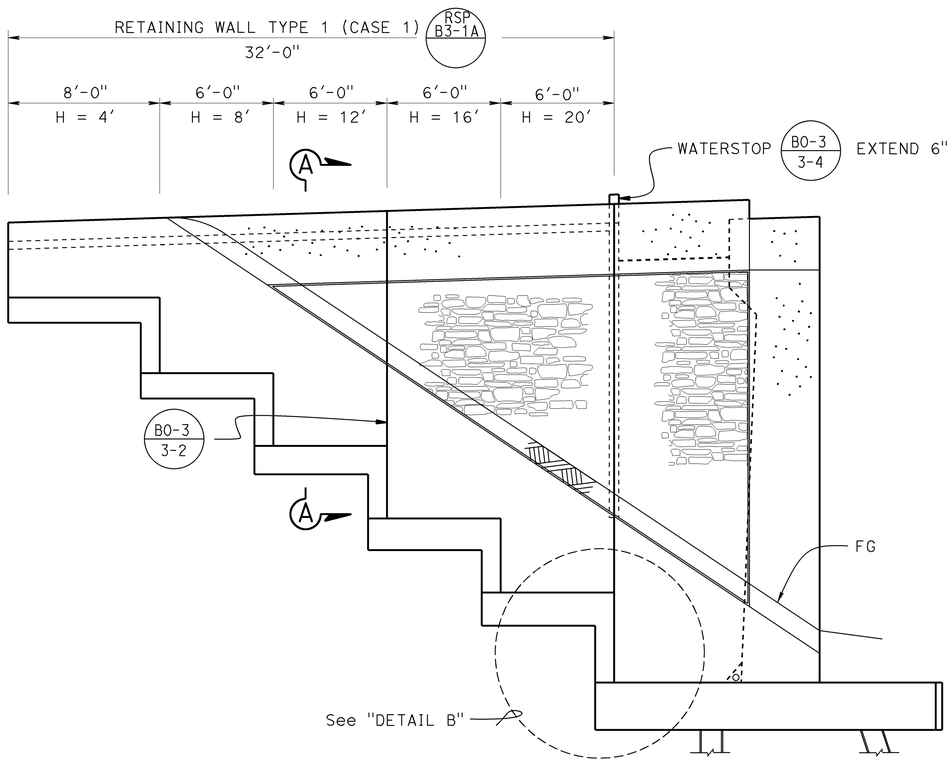

ABUTMENT 1 - RIGHT SIDE RETAINING WALL
1/4" = 1'-0"

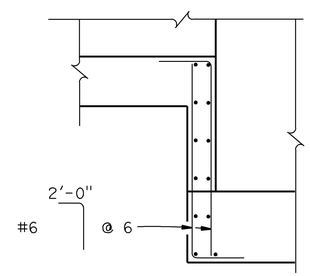

NOTE:
Detail typical at footing steps greater then 4'-0"

DETAIL B RSP B3-5
1/2" = 1'-0"

BARRIER NOT SHOWN

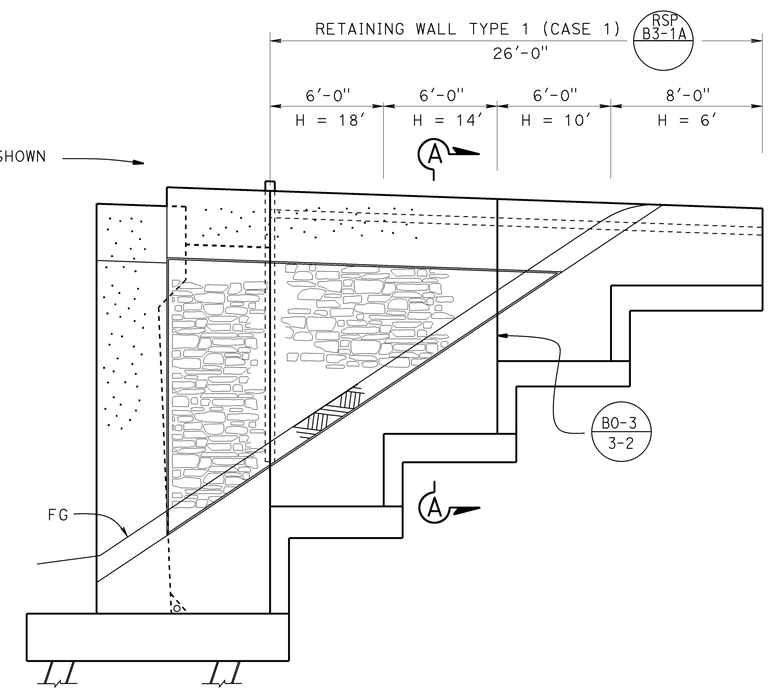

ABUTMENT 1 - LEFT SIDE RETAINING WALL
1/4" = 1'-0"

NOTE:
For Concrete Surface Texture Details, see "CONCRETE SURFACE TEXTURE DETAILS" sheet

	BY	CHECKED
DESIGN	Seung Pyo Hong	Eric G Burgeson
DETAILS	Nancy C Gwynn	Eric G Burgeson
QUANTITIES	Ashraf Ahmed	Seung Pyo Hong

STATE OF CALIFORNIA
DEPARTMENT OF TRANSPORTATION

DIVISION OF ENGINEERING SERVICES
STRUCTURE DESIGN
DESIGN BRANCH 3

BRIDGE NO. 25-0150
POST MILE R031.30

SLY PARK ROAD UC (REPLACE)
RETAINING WALL DETAILS NO. 1

STRUCTURES DESIGN DETAIL SHEET (ENGLISH) (REV. 09-01-10)

ORIGINAL SCALE IN INCHES FOR REDUCED PLANS 0 1 2 3

UNIT: 3578
PROJECT NUMBER & PHASE: 03000000721
CONTRACT NO.: 03-0F2201

DISREGARD PRINTS BEARING EARLIER REVISION DATES

REVISION DATES: 10-26-12 1-16-13 1-30-13 3-18-13

SHEET 12 OF 27

FILE => 25-0150-g-retw01.dgn

USERNAME => s123852 DATE PLOTTED => 01-AUG-2013 TIME PLOTTED => 13:07

DIST	COUNTY	ROUTE	POST MILES TOTAL PROJECT	SHEET No.	TOTAL SHEETS
03	ED	50	R30.7/R31.7	105	119

REGISTERED CIVIL ENGINEER 5-23-13 DATE

8-19-13
PLANS APPROVAL DATE

REGISTERED PROFESSIONAL ENGINEER SEUNG PYO HONG No. 75797 Exp. 6-30-13 CIVIL STATE OF CALIFORNIA

The State of California or its officers or agents shall not be responsible for the accuracy or completeness of scanned copies of this plan sheet.

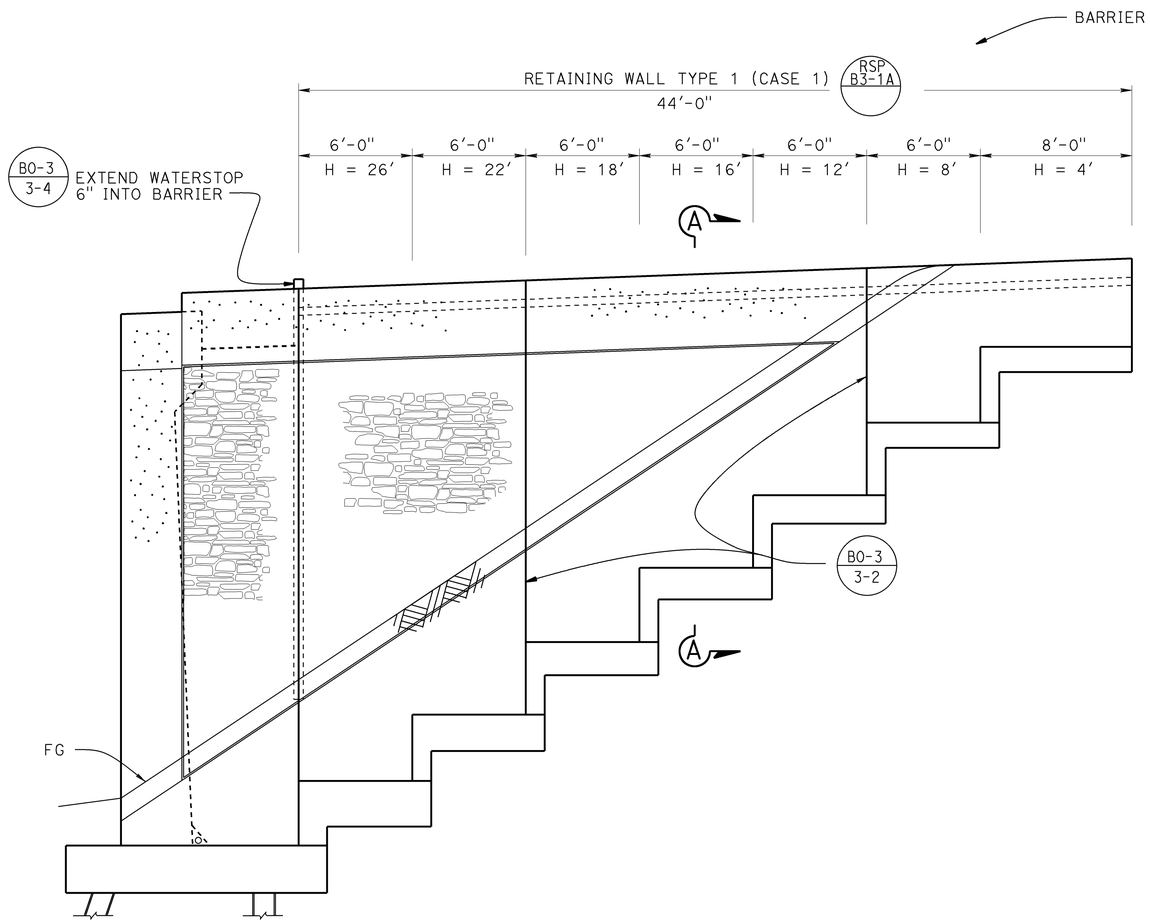

ABUTMENT 2 - RIGHT SIDE RETAINING WALL

1/4" = 1'-0"

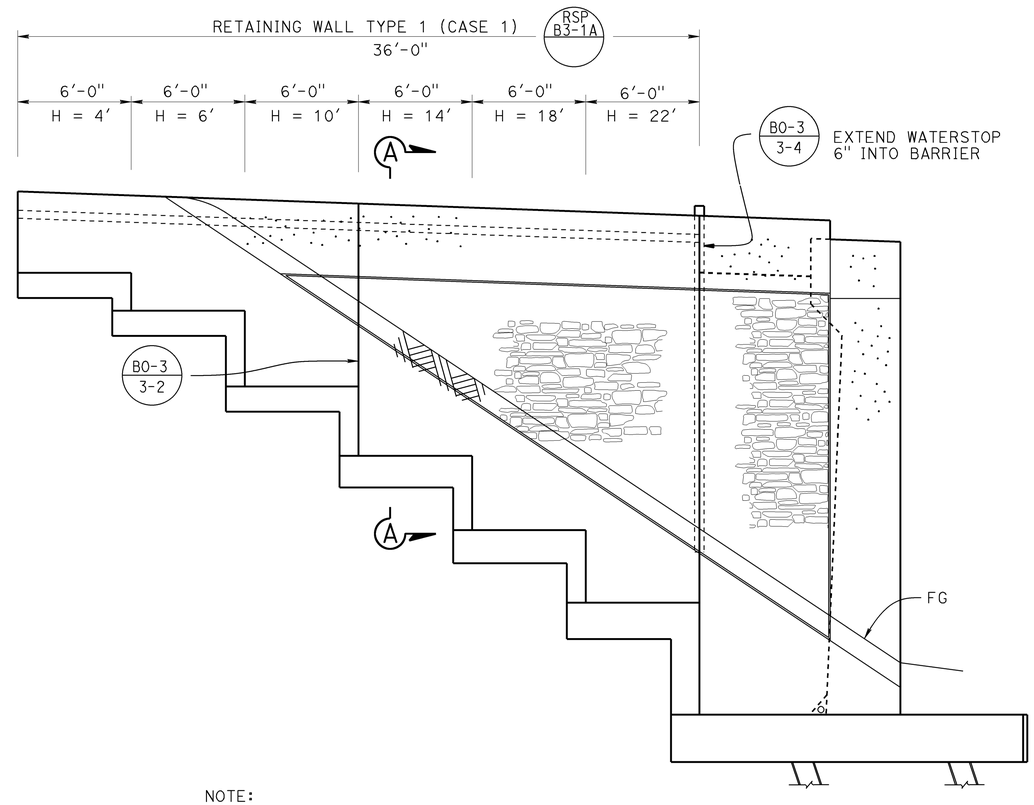

NOTE:
See "DETAIL B", "RETAINING WALL DETAILS NO. 1", sheet for details at footing step greater then 4'-0"

ABUTMENT 2 - LEFT SIDE RETAINING WALL

1/4" = 1'-0"

NOTES:
1. For "SECTION A-A", see "RETAINING WALL DETAILS NO. 1" sheet
2. For Concrete Surface Texture Details, see "CONCRETE SURFACE TEXTURE DETAILS" sheet

	BY	CHECKED
DESIGN	Seung Pyo Hong	Eric G Burgeson
DETAILS	Nancy C Gwynn	Eric G Burgeson
QUANTITIES	Ashraf Ahmed	Seung Pyo Hong

STATE OF CALIFORNIA
DEPARTMENT OF TRANSPORTATION

DIVISION OF ENGINEERING SERVICES
STRUCTURE DESIGN
DESIGN BRANCH 3

BRIDGE NO. 25-0150
POST MILE R031.30

SLY PARK ROAD UC (REPLACE)
RETAINING WALL DETAILS NO. 2

STRUCTURES DESIGN DETAIL SHEET (ENGLISH) (REV. 09-01-10)

ORIGINAL SCALE IN INCHES FOR REDUCED PLANS 0 1 2 3

UNIT: 3578
PROJECT NUMBER & PHASE: 03000000721
CONTRACT NO.: 03-0F2201

DISREGARD PRINTS BEARING EARLIER REVISION DATES

REVISION DATES: 10-26-12 1-16-13 3-18-13

SHEET 13 OF 27

FILE => 25-0150-g-retw02.dgn

USERNAME => s124832 DATE PLOTTED => 01-AUG-2013 TIME PLOTTED => 13:07

DIST	COUNTY	ROUTE	POST MILES TOTAL PROJECT	SHEET No.	TOTAL SHEETS
03	ED	50	R30.7/R31.7	106	119

REGISTERED CIVIL ENGINEER — DATE 5-23-13

8-19-13
PLANS APPROVAL DATE

REGISTERED PROFESSIONAL ENGINEER — Seung Pyo Hong — No. 6-30-14 — Exp. 75797 — CIVIL — STATE OF CALIFORNIA

The State of California or its officers or agents shall not be responsible for the accuracy or completeness of scanned copies of this plan sheet.

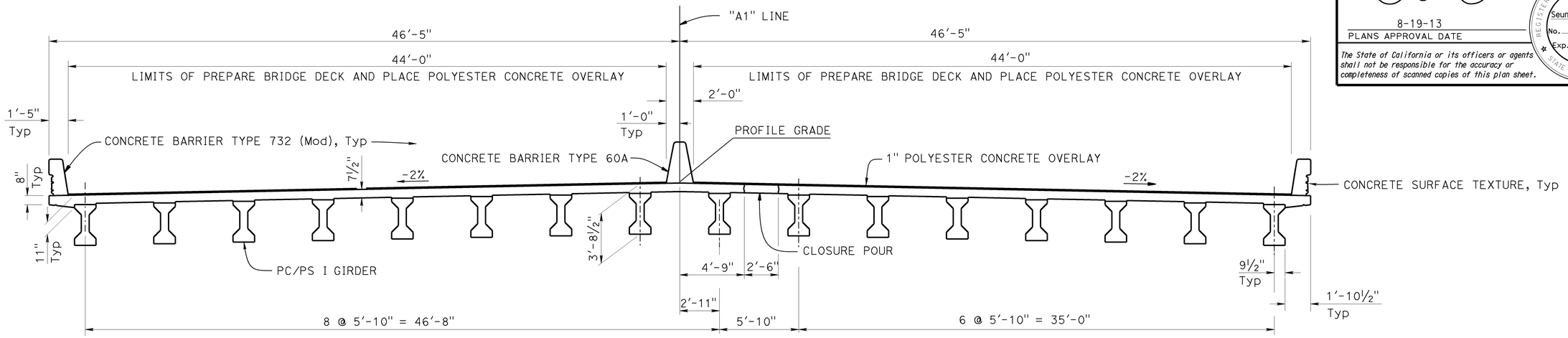

TYPICAL SECTION

¼" = 1'-0"

NOTE:

Closure pour concrete shall not be placed until 15 days after adjacent deck pours are completed

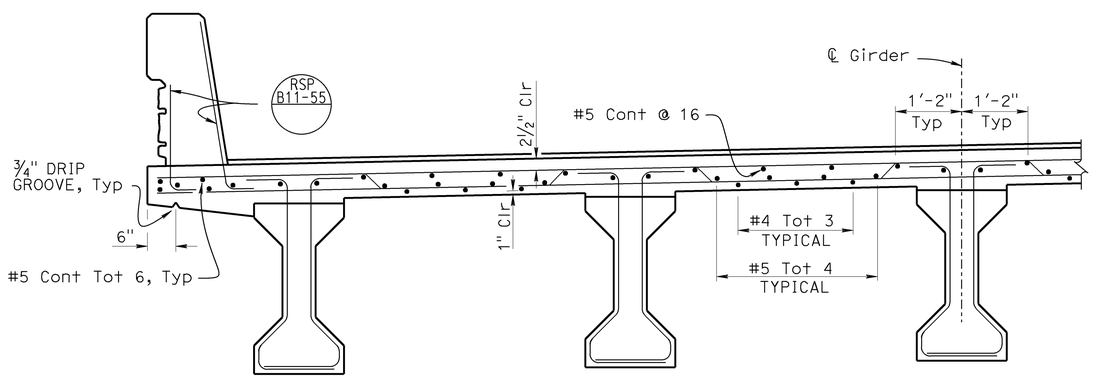

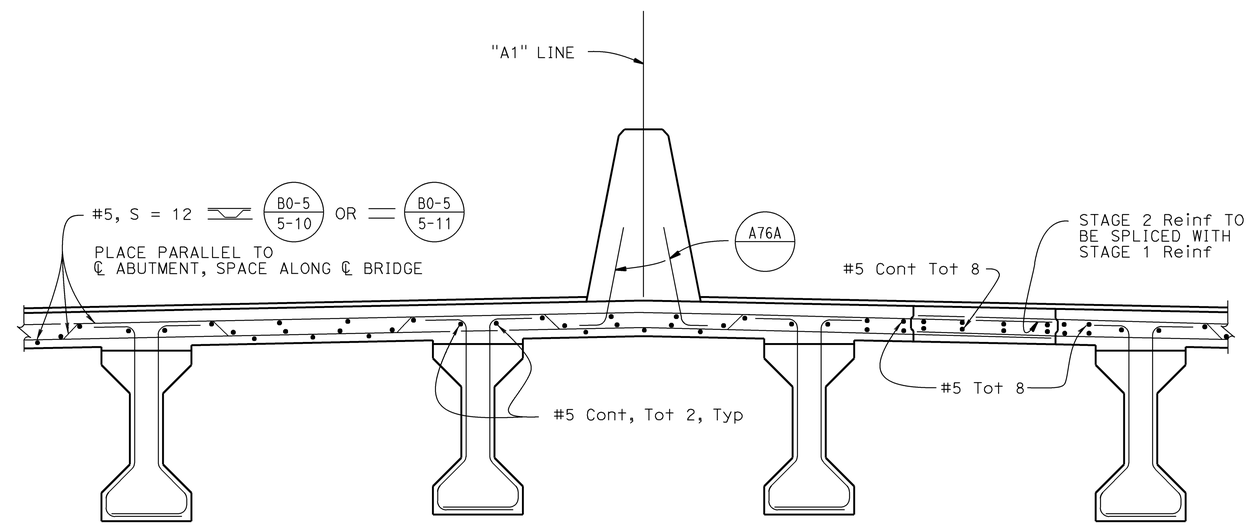

NOTES:

1. All deck and barrier reinforcement shall be epoxy coated
2. Extend overhang and closure pour upper mat reinforcement into end diaphragm

PART TYPICAL SECTION

¾" = 1'-0"

DESIGN	BY Seung Pyo Hong	CHECKED Eric G Burgeson	
DETAILS	BY Nancy C Gwynn	CHECKED Eric G Burgeson	
QUANTITIES	BY Ashraf Ahmed	CHECKED Seung Pyo Hong	

STATE OF CALIFORNIA
DEPARTMENT OF TRANSPORTATION

DIVISION OF ENGINEERING SERVICES
STRUCTURE DESIGN
DESIGN BRANCH 3

BRIDGE NO. 25-0150
POST MILE R031.30

SLY PARK ROAD UC (REPLACE)
TYPICAL SECTION

STRUCTURES DESIGN DETAIL SHEET (ENGLISH) (REV. 09-01-10)

ORIGINAL SCALE IN INCHES FOR REDUCED PLANS 0 1 2 3

UNIT: 3578
PROJECT NUMBER & PHASE: 03000000721
CONTRACT NO.: 03-0F2201

DISREGARD PRINTS BEARING EARLIER REVISION DATES

REVISION DATES 8-1-12 1-11-13 3-22-13

SHEET 14 OF 27

FILE => 25-0150-k-typsec.dgn

USERNAME => s124632 DATE PLOTTED => 01-AUG-2013 TIME PLOTTED => 13:07

DIST	COUNTY	ROUTE	POST MILES TOTAL PROJECT	SHEET No.	TOTAL SHEETS
03	ED	50	R30.7/R31.7	107	119

Seung Pyo Hong 5-23-13
REGISTERED CIVIL ENGINEER DATE

8-19-13
PLANS APPROVAL DATE

REGISTERED PROFESSIONAL ENGINEER
Seung Pyo Hong
No. 6-30-14
Exp. 75797
CIVIL
STATE OF CALIFORNIA

The State of California or its officers or agents shall not be responsible for the accuracy or completeness of scanned copies of this plan sheet.

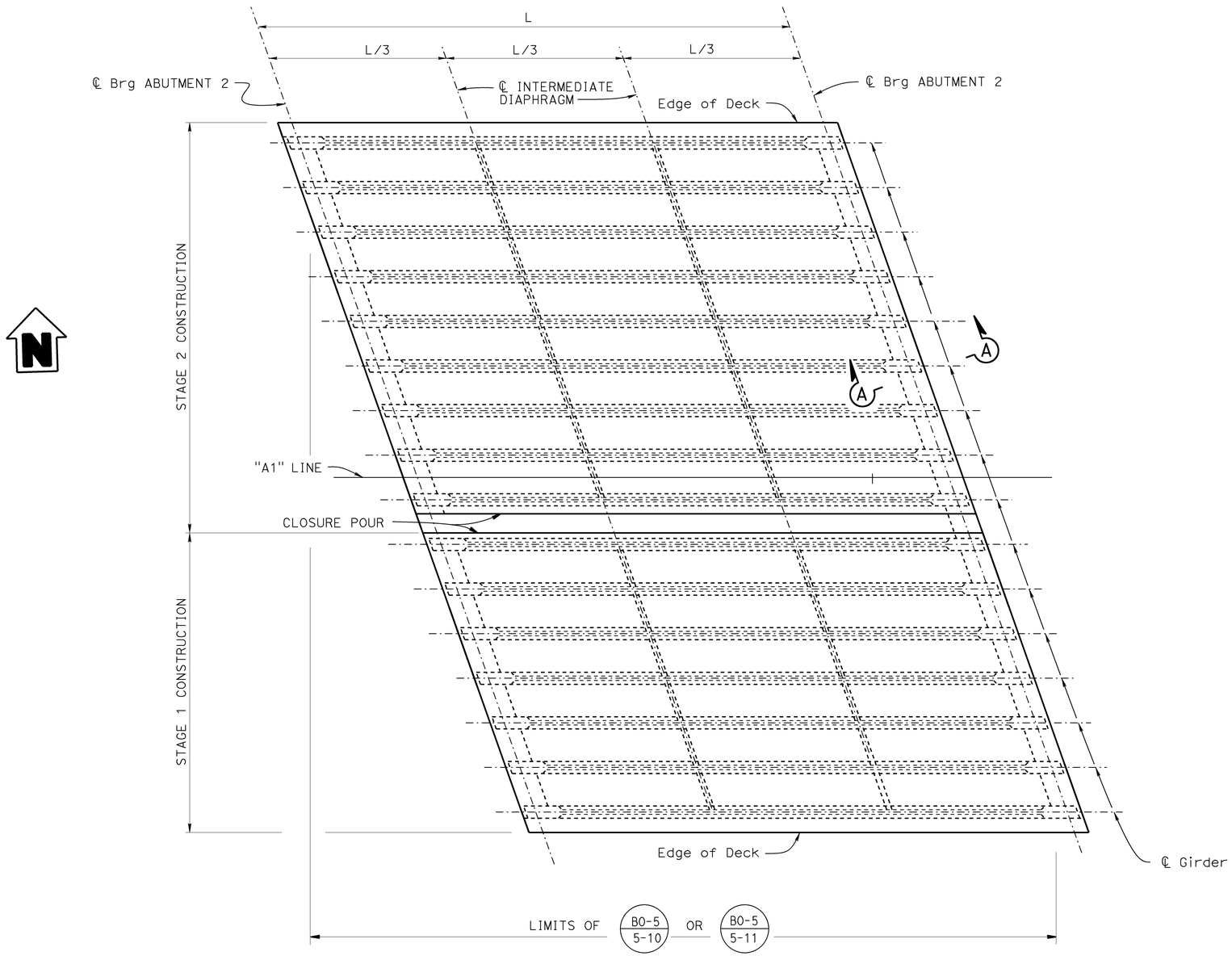

PLAN

1/8" = 1'-0"

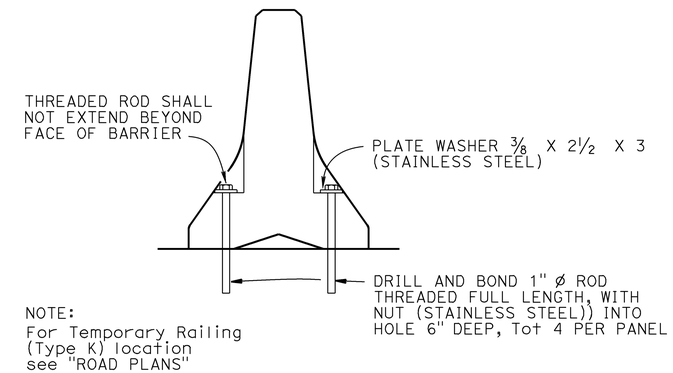

NOTE:
For Temporary Railing (Type K) location see "ROAD PLANS"

TYPE K RAILING ATTACHMENT

NO SCALE

NOTES:
1. For "SECTION A-A", see "GIRDER DETAILS" sheet
2. For details not shown, see "PRECAST PRESTRESSED I GIRDER" sheet

DESIGN	BY Seung Pyo Hong	CHECKED Eric G Burgeson	
DETAILS	BY Nancy C Gwynn	CHECKED Eric G Burgeson	
QUANTITIES	BY Ashraf Ahmed	CHECKED Seung Pyo Hong	

STATE OF CALIFORNIA
DEPARTMENT OF TRANSPORTATION

DIVISION OF ENGINEERING SERVICES
STRUCTURE DESIGN
DESIGN BRANCH 3

BRIDGE NO. 25-0150
POST MILE R031.30

SLY PARK ROAD UC (REPLACE)
GIRDER LAYOUT

STRUCTURES DESIGN DETAIL SHEET (ENGLISH) (REV. 09-01-10)

ORIGINAL SCALE IN INCHES FOR REDUCED PLANS 0 1 2 3

UNIT: 3578
PROJECT NUMBER & PHASE: 03000000721
CONTRACT NO.: 03-0F2201

DISREGARD PRINTS BEARING EARLIER REVISION DATES

REVISION DATES 10-17-12 12-11-12

SHEET 15 OF 27

FILE => 25-0150-1-g-la.dgn

USERNAME => s124832 DATE PLOTTED => 01-AUG-2013 TIME PLOTTED => 13:07

DIST	COUNTY	ROUTE	POST MILES TOTAL PROJECT	SHEET No.	TOTAL SHEETS
03	ED	50	R30.7/R31.7	108	119

Seung Pyo Hong 5-23-13
REGISTERED CIVIL ENGINEER DATE

8-19-13
PLANS APPROVAL DATE

REGISTERED PROFESSIONAL ENGINEER
Seung Pyo Hong
No. 6-30-14
Exp. 75797
CIVIL
STATE OF CALIFORNIA

The State of California or its officers or agents shall not be responsible for the accuracy or completeness of scanned copies of this plan sheet.

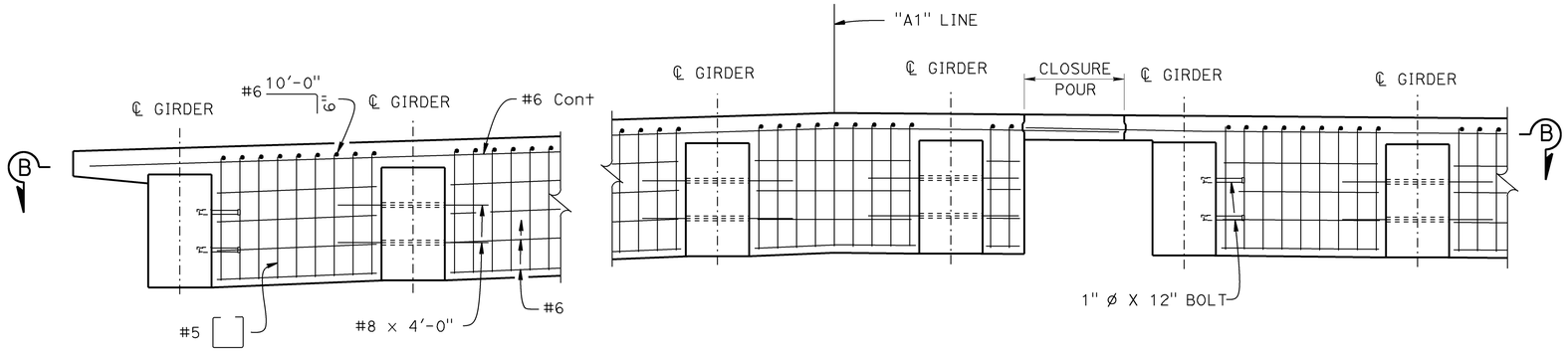

PART ELEVATION

3/8" = 1'-0"

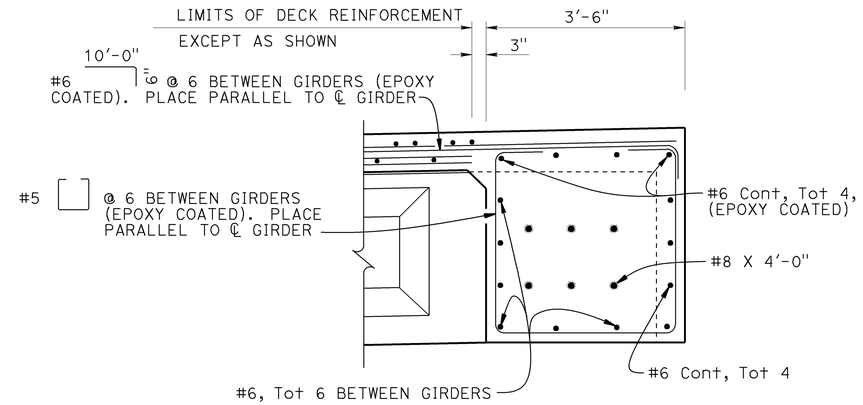

SECTION A-A

3/4" = 1'-0"

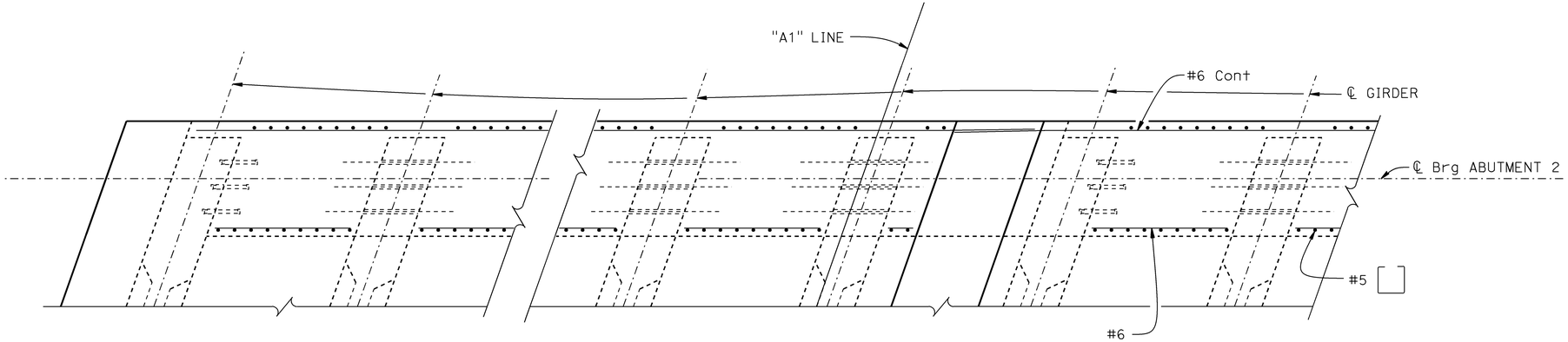

SECTION B-B

3/8" = 1'-0"

NOTE:
For details not shown, see "PRECAST PRESTRESSED I GIRDER" sheet

DESIGN	BY Seung Pyo Hong	CHECKED Eric G Burgeson	
DETAILS	BY Nancy C Gwynn	CHECKED Eric G Burgeson	
QUANTITIES	BY Ashraf Ahmed	CHECKED Seung Pyo Hong	

STATE OF CALIFORNIA
DEPARTMENT OF TRANSPORTATION

DIVISION OF ENGINEERING SERVICES
STRUCTURE DESIGN
DESIGN BRANCH 3

BRIDGE NO. 25-0150
POST MILE R031.30

SLY PARK ROAD UC (REPLACE)
GIRDER DETAILS

STRUCTURES DESIGN DETAIL SHEET (ENGLISH) (REV. 09-01-10)

ORIGINAL SCALE IN INCHES FOR REDUCED PLANS 0 1 2 3

UNIT: 3578
PROJECT NUMBER & PHASE: 03000000721
CONTRACT NO.: 03-0F2201

DISREGARD PRINTS BEARING EARLIER REVISION DATES

REVISION DATES: ~~10-30-12~~ 1-10-13

SHEET 16 OF 27

FILE => 25-0150-I-grd.dgn

USERNAME => s124832 DATE PLOTTED => 01-AUG-2013 TIME PLOTTED => 13:07

DIST	COUNTY	ROUTE	POST MILES TOTAL PROJECT	SHEET No.	TOTAL SHEETS
03	ED	50	R30.7/R31.7	109	119

REGISTERED CIVIL ENGINEER 5-23-13 DATE

8-19-13
PLANS APPROVAL DATE

REGISTERED PROFESSIONAL ENGINEER Seung Pyo Hong No. 6-30-14 Exp. 75797 CIVIL STATE OF CALIFORNIA

The State of California or its officers or agents shall not be responsible for the accuracy or completeness of scanned copies of this plan sheet.

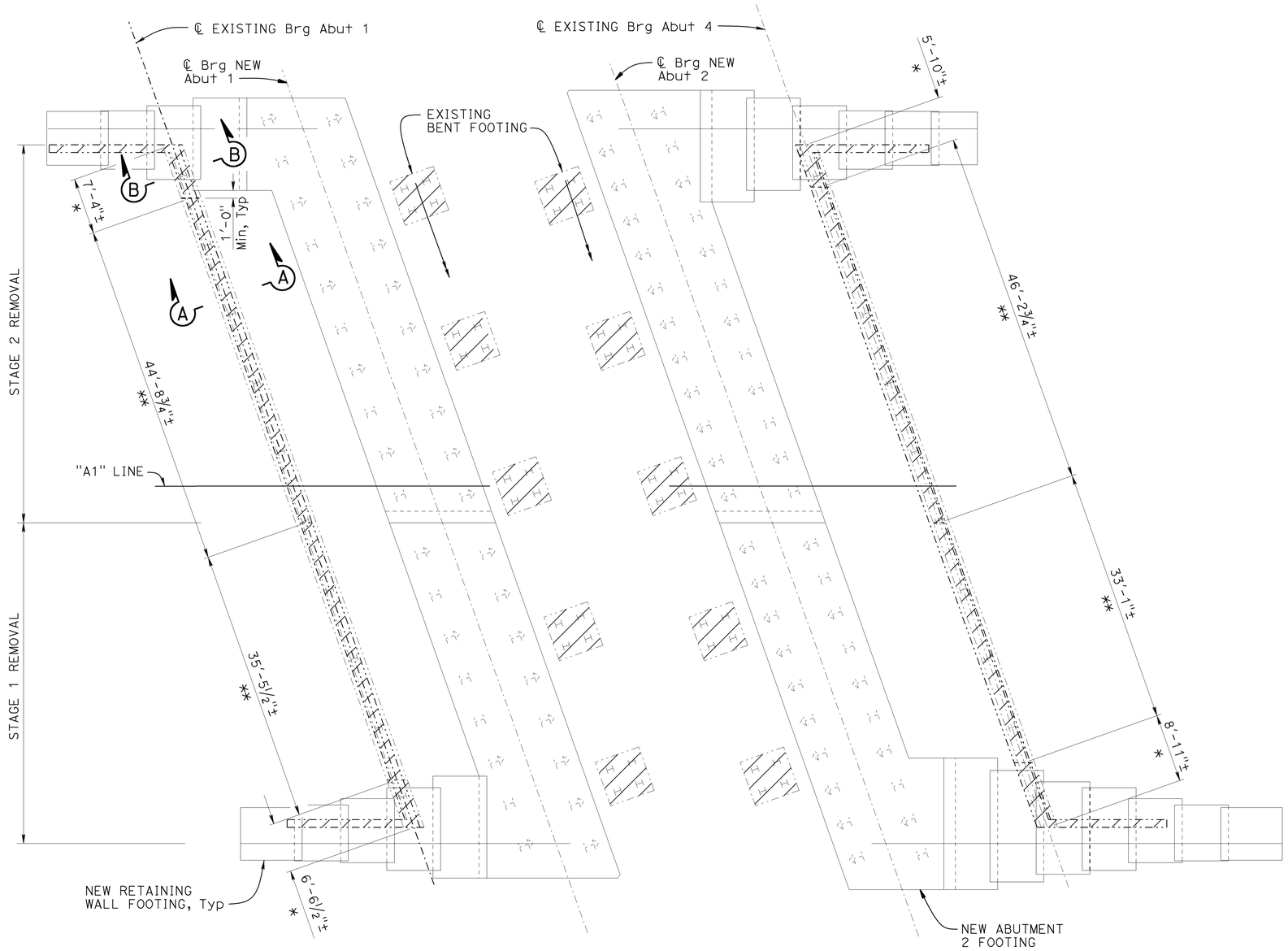

PLAN
1/8" = 1'-0"

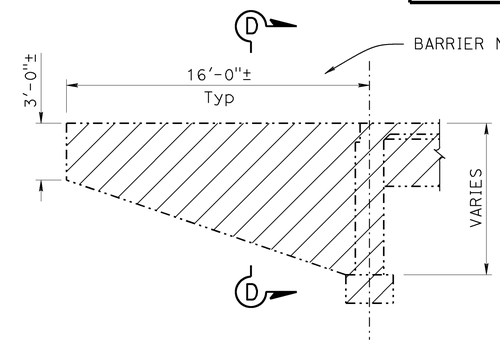

WINGWALL ELEVATION
1/4" = 1'-0"

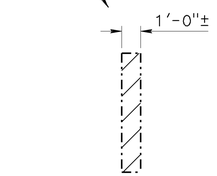

SECTION D-D
1/4" = 1'-0"

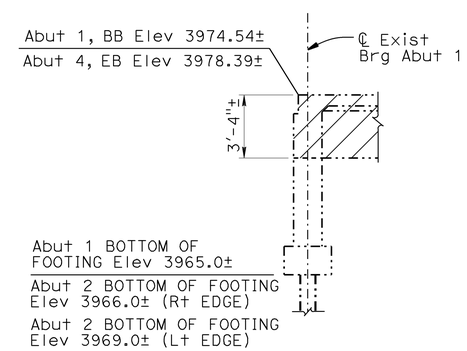

SECTION A-A
1/4" = 1'-0"

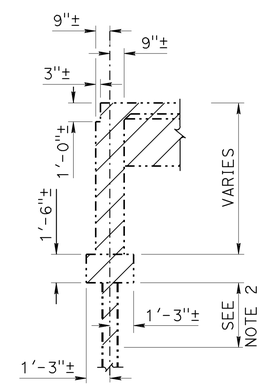

NOTES:
1. For details not shown, see "SECTION A-A"
2. Remove portion of existing pile to the bottom of new retaining wall footing

SECTION B-B
1/4" = 1'-0"

NOTE:
THE CONTRACTOR SHALL VERIFY ALL CONTROLLING FIELD DIMENSIONS BEFORE ORDERING OR FABRICATING ANY MATERIAL.

LEGEND:
-·-·-·- Indicates existing structure
* - see "SECTION B-B"
** - see "SECTION A-A"
▨ - Indicated existing bridge concrete removal

	BY	CHECKED
DESIGN	Seung Pyo Hong	Eric G Burgeson
DETAILS	Nancy C Gwynn	Eric G Burgeson
QUANTITIES	Ashraf Ahmed	Seung Pyo Hong

STATE OF CALIFORNIA
DEPARTMENT OF TRANSPORTATION

DIVISION OF ENGINEERING SERVICES
STRUCTURE DESIGN
DESIGN BRANCH 3

BRIDGE NO. 25-0150
POST MILE R031.30

SLY PARK ROAD UC (REPLACE)
CONCRETE REMOVAL DETAILS

STRUCTURES DESIGN DETAIL SHEET (ENGLISH) (REV. 09-01-10)

ORIGINAL SCALE IN INCHES FOR REDUCED PLANS 0 1 2 3

UNIT: 3578
PROJECT NUMBER & PHASE: 03000000721
CONTRACT NO.: 03-0F2201

DISREGARD PRINTS BEARING EARLIER REVISION DATES

REVISION DATES 11-9-12 12-7-12 1-30-13 1-30-13

SHEET 17 OF 27

FILE => 25-0150-n-conrem.dgn

USERNAME => s123852 DATE PLOTTED => 01-AUG-2013 TIME PLOTTED => 13:07

DIST	COUNTY	ROUTE	POST MILES TOTAL PROJECT	SHEET No.	TOTAL SHEETS
03	ED	50	R30.7/R31.7	110	119

REGISTERED CIVIL ENGINEER 5-23-13 DATE

8-19-13
PLANS APPROVAL DATE

REGISTERED PROFESSIONAL ENGINEER Seung Pyo Hong No. 6-30-14 Exp. 75797 CIVIL STATE OF CALIFORNIA

The State of California or its officers or agents shall not be responsible for the accuracy or completeness of scanned copies of this plan sheet.

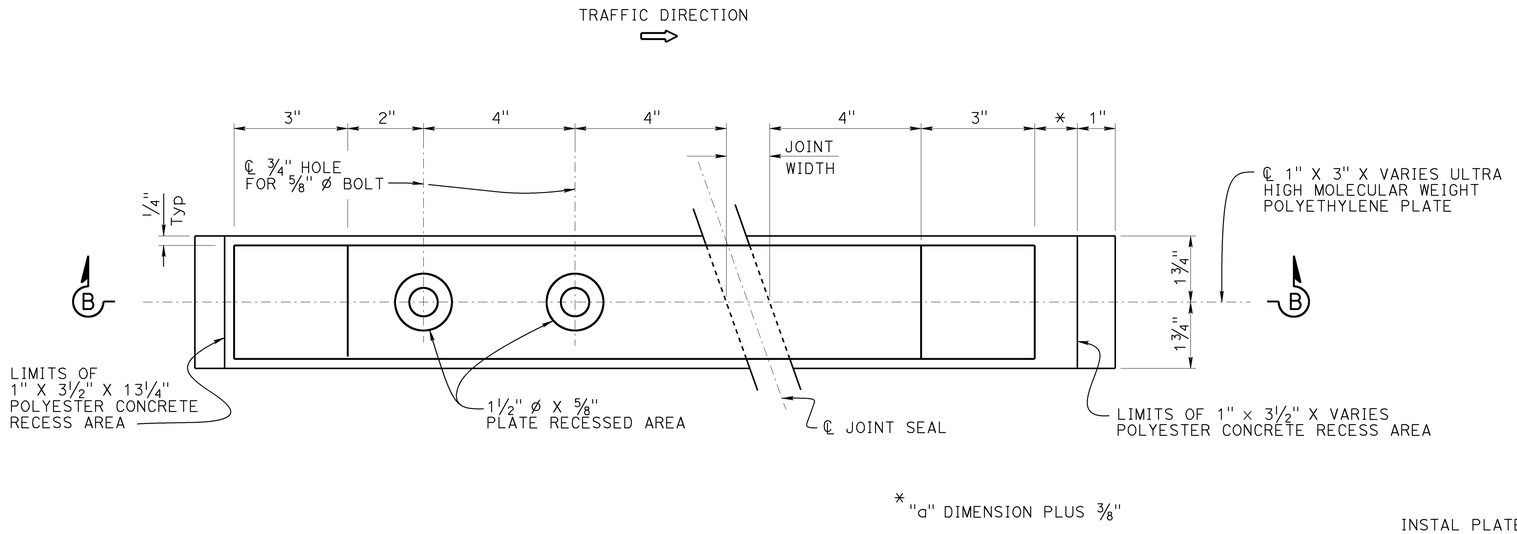

DETAIL A

6" = 1'-0"

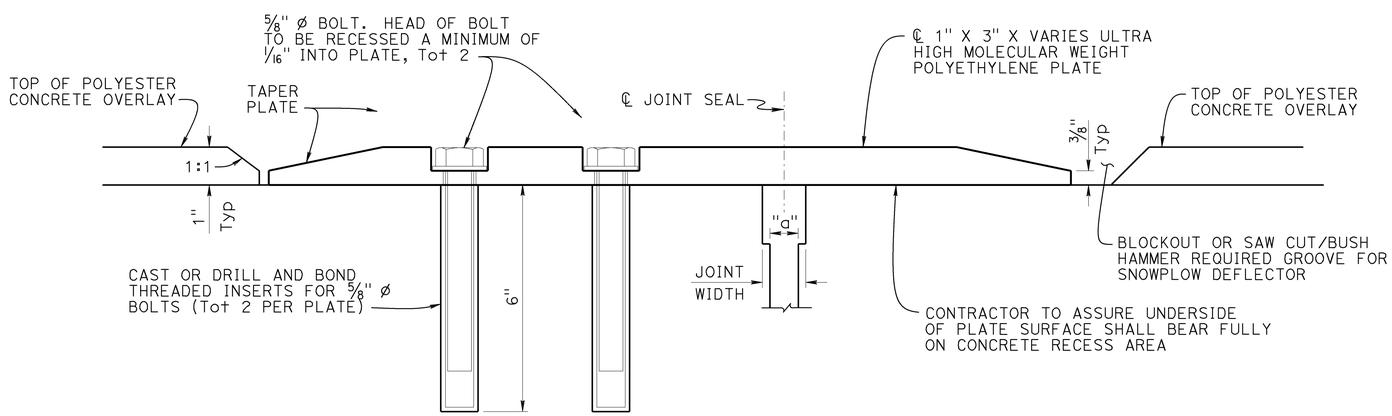

SECTION B-B

6" = 1'-0"

NOTE:
Snowplow Deflector location shall be determined by the engineer in the field

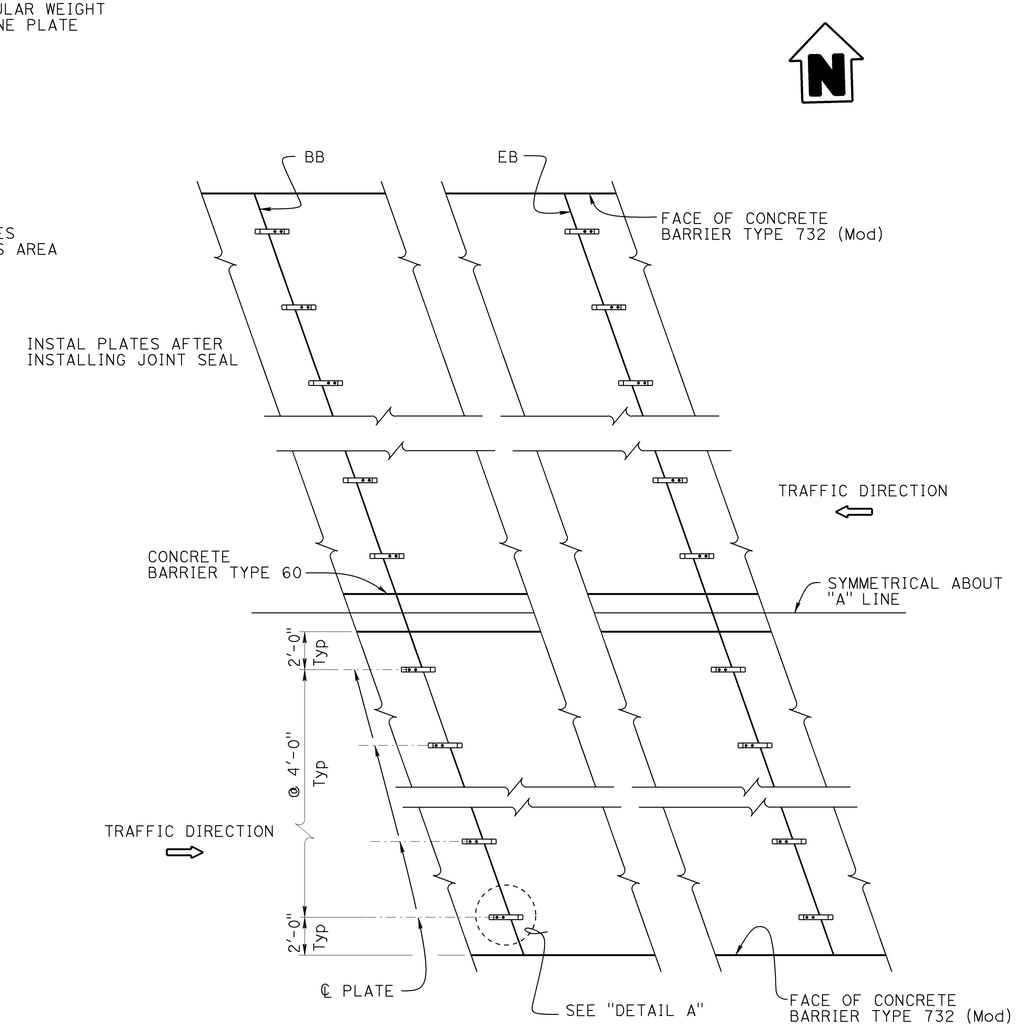

PART PLAN

1/4" = 1'-0"

DESIGN	BY Seung Pyo Hong	CHECKED Eric G Burgeson	
DETAILS	BY Nancy C Gwynn	CHECKED Eric G Burgeson	
QUANTITIES	BY Ashraf Ahmed	CHECKED Seung Pyo Hong	

STATE OF CALIFORNIA
DEPARTMENT OF TRANSPORTATION

DIVISION OF ENGINEERING SERVICES
STRUCTURE DESIGN
DESIGN BRANCH 3

BRIDGE NO. 25-0150
POST MILE R031.30

SLY PARK ROAD UC (REPLACE)
SNOWPLOW DEFLECTOR DETAILS

STRUCTURES DESIGN DETAIL SHEET (ENGLISH) (REV. 09-01-10)

ORIGINAL SCALE IN INCHES FOR REDUCED PLANS 0 1 2 3

UNIT: 3578
PROJECT NUMBER & PHASE: 03000000721
CONTRACT NO.: 03-0F2201

DISREGARD PRINTS BEARING EARLIER REVISION DATES

REVISION DATES 11-1-12 1-10-13

SHEET 18 OF 27

FILE => 25-0150-s-snodef.dgn

USERNAME => s124832 DATE PLOTTED => 01-AUG-2013 TIME PLOTTED => 13:07

DIST	COUNTY	ROUTE	POST MILES TOTAL PROJECT	SHEET No.	TOTAL SHEETS
03	ED	50	R30.7/R31.7	111	119

REGISTERED CIVIL ENGINEER 5-23-13 DATE

8-19-13
PLANS APPROVAL DATE

REGISTERED PROFESSIONAL ENGINEER SEUNG PYO HONG No. 72441 Exp. 6-30-13 CIVIL STATE OF CALIFORNIA

The State of California or its officers or agents shall not be responsible for the accuracy or completeness of scanned copies of this plan sheet.

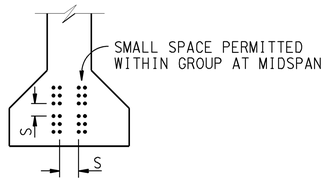

CLEARANCES FOR PRETENSIONED STRANDS

1. Strands may be bundled in groups consisting of 3 vertically, 2 horizontally and separated at the ends
2. The Min distance "S" between groups or individual strands is 1½" for ⅜" ø strands, 1¾" for ½" ø strands, 2" for 0.6" ø strands
3. "S" is measured between centers of adjacent strands
4. Approval by the Engineer is required for deviation

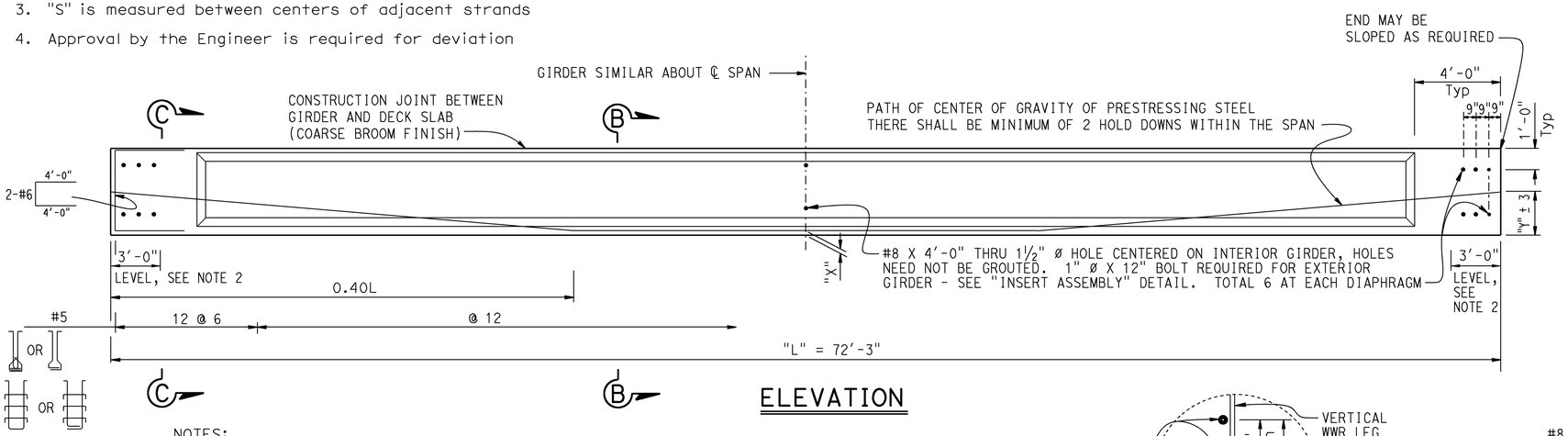

ELEVATION

NOTES:
1. All reinforcement except prestressing steel to be epoxy coated
2. Fabricators to provide a detail to correct longitudinal profile grade

GENERAL NOTES

JACKING FORCE (P): The jacking force required at the point of control along the span. The jacking force does not include any fabrication specific losses.

The maximum tensile stress in the prestressing steel upon release shall not exceed 75% of the specified minimum ultimate tensile strength of the prestressing steel.

The maximum temporary tensile stress (jacking stress) in the prestressing steel shall not exceed 80% of the specified minimum ultimate tensile strength of the prestressing steel.

CONCRETE STRENGTH: f'ci is at time of initial stressing
f'c is at 28 days

DEFLECTION COMPONENTS: Informational - to be used in setting screed line elevations

Screed line elevations for deck concrete will be determined by the Engineer.

Contractor may interpolate "P" and "X" values between limits shown, as approved by the Engineer.

All reinforcement to be epoxy coated, except prestressing strands

Girder location or designation and length	Jacking Force (P) (Kips) "X"		"Y" (in)	Concrete Strength (ksi) f'ci	Concrete Strength (ksi) f'c	Midspan Dead Load Deflection (inches) Deck	Midspan Dead Load Deflection (inches) Rail
72'-3"	4"	750		6	8	1⅛	1/16
	6"	810					
	4"						
	6"						

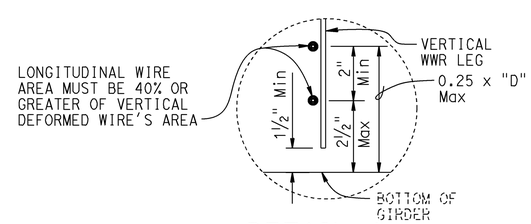

DETAIL A

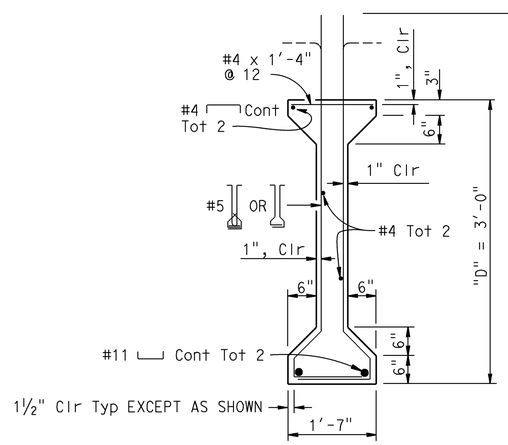

SECTION B-B

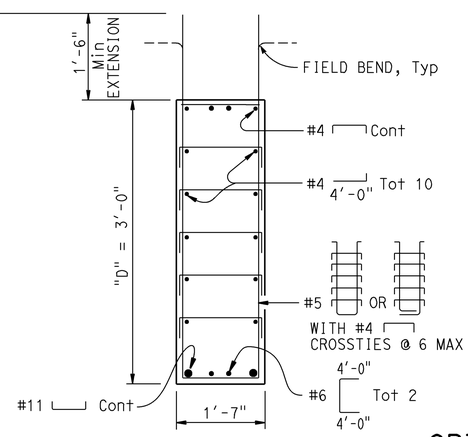

SECTION C-C

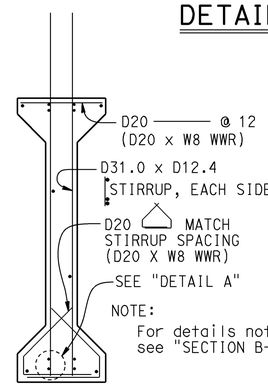

OPTIONAL WELDED WIRE REINFORCEMENT (WWR) DETAIL

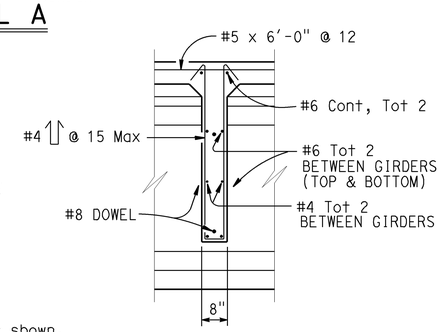

SECTION D-D

WWR NOTE: MANUFACTURER'S SHOP DRAWING SHALL CONFORM TO THE REINFORCEMENT SHOWN ON THIS SHEET AS NOTED AND THE SPECIAL PROVISIONS

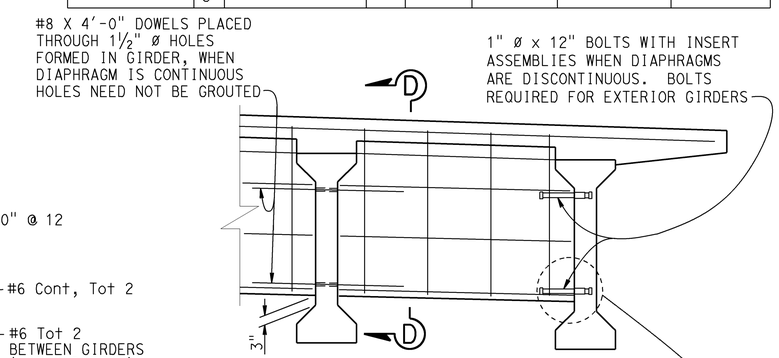

INTERMEDIATE DIAPHRAGM

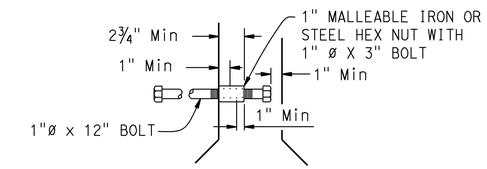

INSERT ASSEMBLY

NO SCALE

	BY	CHECKED
DESIGN	Seung Pyo Hong	Eric G Burgeson
DETAILS	Nancy C Gwynn	Eric G Burgeson
QUANTITIES	Ashraf Ahmed	Seung Pyo Hong

STATE OF CALIFORNIA
DEPARTMENT OF TRANSPORTATION

DIVISION OF ENGINEERING SERVICES
STRUCTURE DESIGN
DESIGN BRANCH 3

BRIDGE NO. 25-0150
POST MILE R031.30

SLY PARK ROAD UC (REPLACE)
PRECAST PRESTRESSED I GIRDER

STRUCTURES DESIGN DETAIL SHEET (ENGLISH) (REV. 09-01-10)

ORIGINAL SCALE IN INCHES FOR REDUCED PLANS 0 1 2 3

UNIT: 3578
PROJECT NUMBER & PHASE: 03000000721
CONTRACT NO.: 03-0F2201

DISREGARD PRINTS BEARING EARLIER REVISION DATES

REVISION DATES 1-29-13 5-21-13

SHEET 19 OF 27

FILE => 25-0150-u-igrd.dgn

USERNAME => s124832 DATE PLOTTED => 01-AUG-2013 TIME PLOTTED => 13:07

DIST	COUNTY	ROUTE	POST MILES TOTAL PROJECT	SHEET No.	TOTAL SHEETS
03	ED	50	R30.7/R31.7	112	119

REGISTERED CIVIL ENGINEER 5-23-13 DATE

8-19-13
PLANS APPROVAL DATE

REGISTERED PROFESSIONAL ENGINEER Seung Pyo Hong No. 6-30-14 Exp. 75797 CIVIL STATE OF CALIFORNIA

The State of California or its officers or agents shall not be responsible for the accuracy or completeness of scanned copies of this plan sheet.

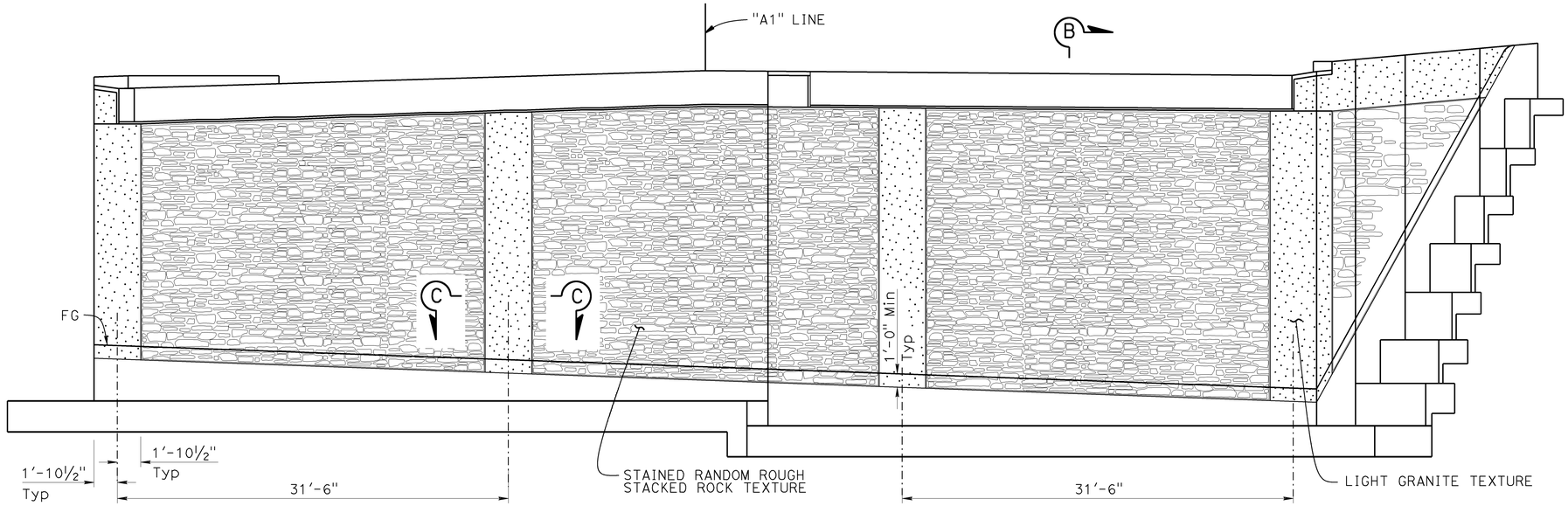

NOTE:
LIMITS OF PREPARE AND STAIN EQUALS LIMITS OF STAINED RANDOM ROUGH STACKED ROCK TEXTURE

ABUTMENT ELEVATION
3/16" = 1'-0"

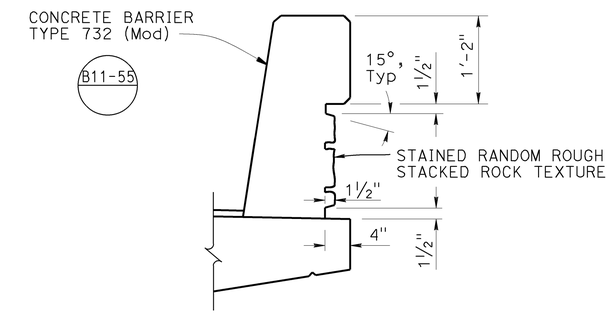

SECTION A-A
1" = 1'-0"

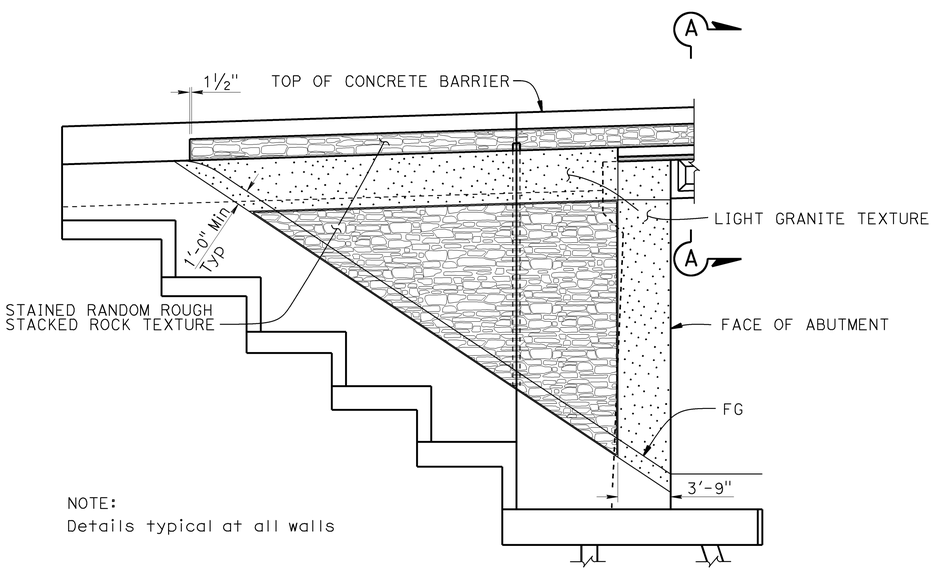

NOTE:
Details typical at all walls

WINGWALL ELEVATION
3/16" = 1'-0"

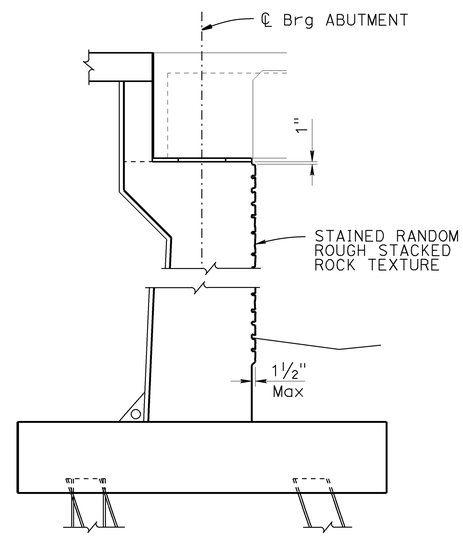

SECTION B-B
3/8" = 1'-0"

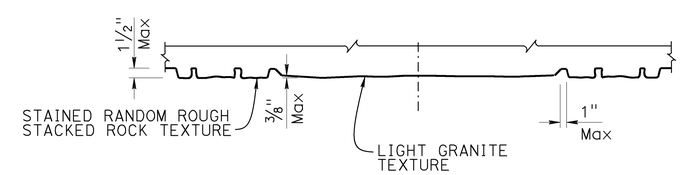

SECTION C-C
1" = 1'-0"

DESIGN	BY Seung Pyo Hong	CHECKED Eric G Burgeson	
DETAILS	BY Nancy C Gwynn	CHECKED Eric G Burgeson	
QUANTITIES	BY Ashraf Ahmed	CHECKED Seung Pyo Hong	

STATE OF CALIFORNIA
DEPARTMENT OF TRANSPORTATION

DIVISION OF ENGINEERING SERVICES
STRUCTURE DESIGN
DESIGN BRANCH 3

BRIDGE NO. 25-0150
POST MILE R031.30

SLY PARK ROAD UC (REPLACE)
CONCRETE SURFACE TEXTURE DETAILS

STRUCTURES DESIGN DETAIL SHEET (ENGLISH) (REV. 09-01-10)

ORIGINAL SCALE IN INCHES FOR REDUCED PLANS 0 1 2 3

UNIT: 3578
PROJECT NUMBER & PHASE: 03000000721
CONTRACT NO.: 03-0F2201

DISREGARD PRINTS BEARING EARLIER REVISION DATES

REVISION DATES: 1-10-13 1-26-13 4-2-13 4-10-13

SHEET 20 OF 27

FILE => 25-0150-v-arch.dgn

USERNAME => s124832 DATE PLOTTED => 01-AUG-2013 TIME PLOTTED => 13:07

DIST	COUNTY	ROUTE	POST MILES TOTAL PROJECT	SHEET No.	TOTAL SHEETS
03	ED	50	R30.7/R31.7	113	119

REGISTERED CIVIL ENGINEER 5-21-13 DATE

8-19-13
PLANS APPROVAL DATE

REGISTERED PROFESSIONAL ENGINEER C. J. SIMS No. C46471 Exp. 6-30-13 CIVIL STATE OF CALIFORNIA

The State of California or its officers or agents shall not be responsible for the accuracy or completeness of scanned copies of this plan sheet.

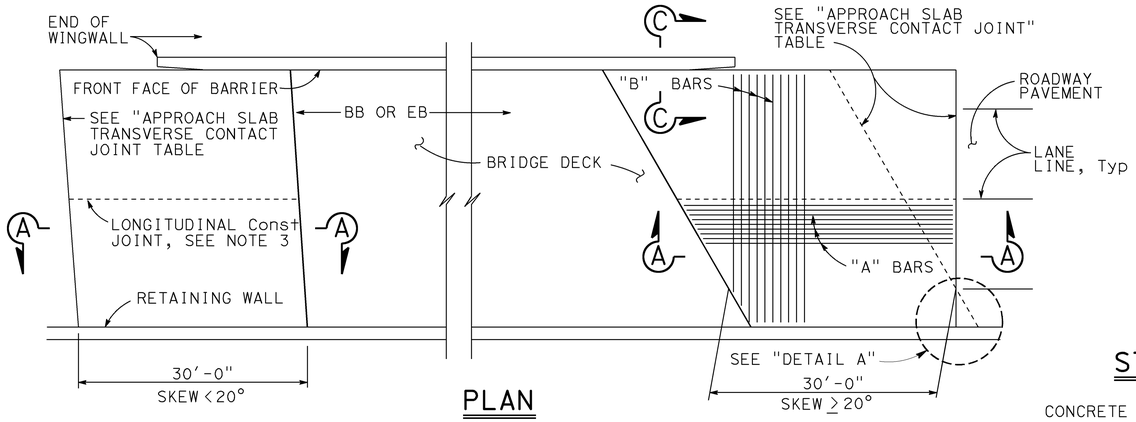

PLAN
1" = 10'

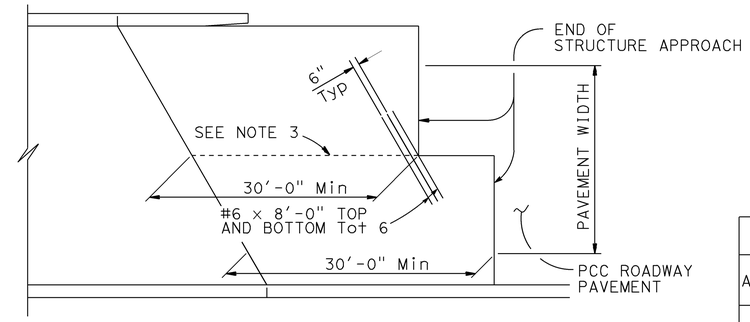

STRUCTURE APPROACH - END STAGGER DETAIL
No Scale

APPROACH SLAB TRANSVERSE CONTACT JOINT		
APPROACH SKEW	WITH AC ROADWAY PAVEMENT	WITH PCC ROADWAY PAVEMENT
< 20°	PARALLEL TO FACE OF PN	PARALLEL TO FACE OF PN
20° - 45°	PARALLEL TO FACE OF PN USE "DETAIL A"	STAGGER LINES 24' TO 36' APART
> 45°	PARALLEL TO FACE OF PN USE "DETAIL A"	STAGGER AT EACH LANE LINE

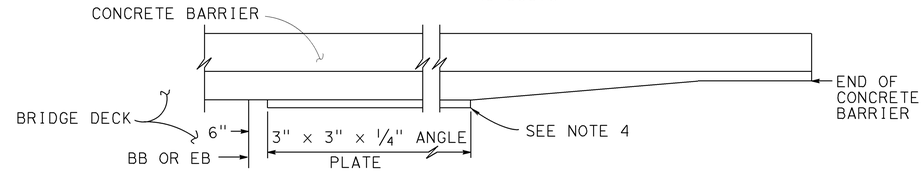

EDGE ANGLE DETAIL
1/2"=1'-0"

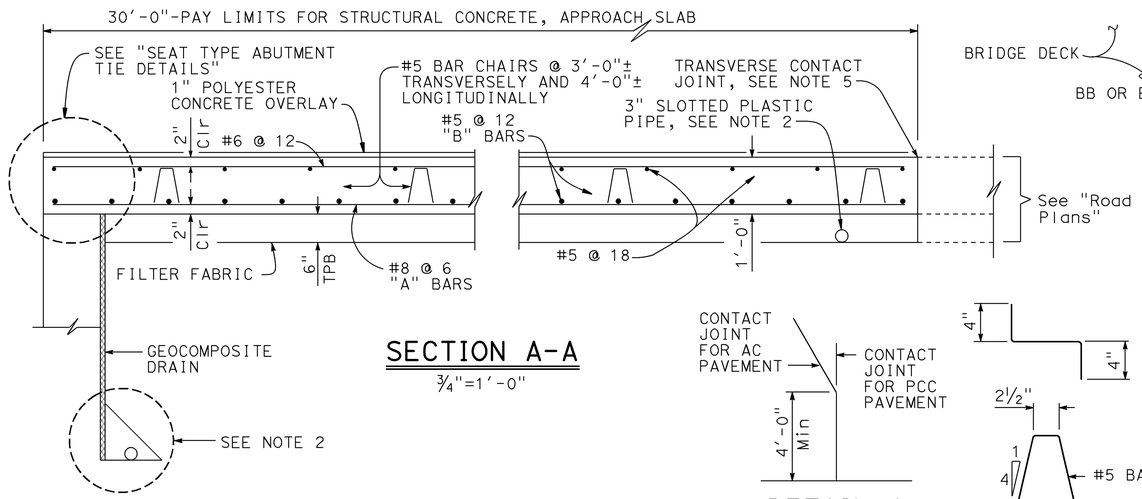

SECTION A-A
3/4"=1'-0"

DETAIL A
No Scale

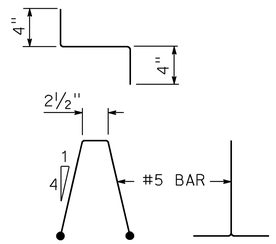

BAR CHAIR DETAIL
1 1/2"=1'-0"

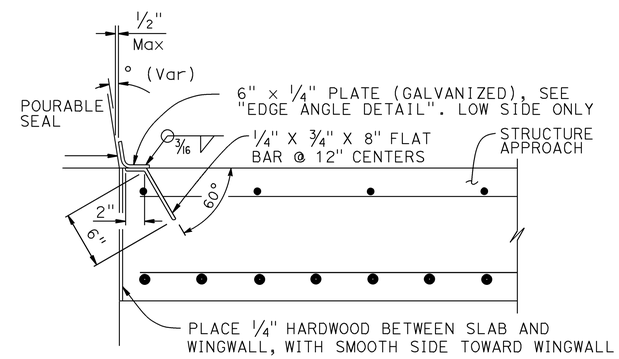

DETAIL B
1 1/2" = 1'-0"

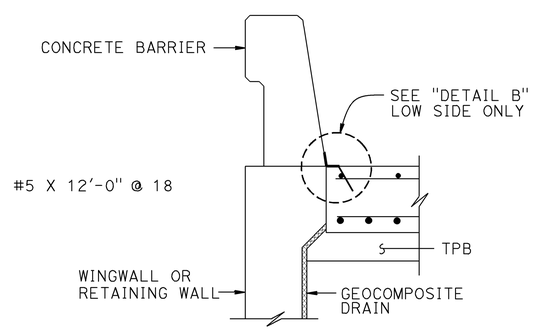

SECTION C-C
3/4"=1'-0"

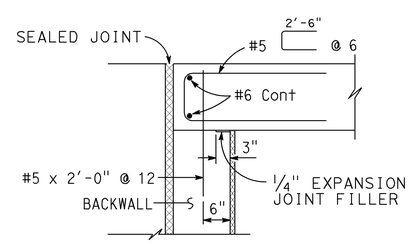

MR ≤ 2"

SEAT TYPE ABUTMENT TIE DETAILS (SEE NOTE 1)
3/4"=1'-0"

NOTES:

1. For details not shown, see Structure Plans. For MR ≤ 2", adjust bar reinforcement to clear a sawcut for sealed joint, when required
2. For drainage details, see "STRUCTURE APPROACH DRAINAGE DETAILS" sheet
3. Longitudinal construction joints, when permitted by the Engineer, shall be located on lane lines
4. End angle or plate at beginning of barrier transition, end of wingwall or end of structure approach as applicable
5. For transverse contact joint with new PCC paving, refer to Standard Plan P10
6. At the Contractor's option, approach slab transverse reinforcement may be placed parallel to paving notch. Spacing of transverse reinforcement is measured along ℄ roadway
7. All reinforcement to be epoxy coated

	BY	CHECKED
DESIGN	Seung Pyo Hong	Eric B Burgeson
DETAILS	Nancy C Gwynn	Eric G Burgeson
QUANTITIES	Ashraf Ahmed	Seung Pyo Hong

STATE OF CALIFORNIA
DEPARTMENT OF TRANSPORTATION

DIVISION OF ENGINEERING SERVICES
STRUCTURE DESIGN
DESIGN BRANCH 3

BRIDGE NO. 25-0150
POST MILE R031.30

SLY PARK ROAD UC (REPLACE)
STRUCTURE APPROACH TYPE N(30S)

STRUCTURES DESIGN DETAIL SHEET (ENGLISH) (REV. 09-01-10)

ORIGINAL SCALE IN INCHES FOR REDUCED PLANS 0 1 2 3

UNIT: 3578
PROJECT NUMBER & PHASE: 03000000721
CONTRACT NO.: 03-0F2201

DISREGARD PRINTS BEARING EARLIER REVISION DATES

REVISION DATES 1-29-13

SHEET 21 OF 27

FILE => 25-0150-x-app.dgn

USERNAME => s124832 DATE PLOTTED => 01-AUG-2013 TIME PLOTTED => 13:07

DIST	COUNTY	ROUTE	POST MILES TOTAL PROJECT	SHEET No.	TOTAL SHEETS
03	ED	50	R30.7/R31.7	114	119

REGISTERED CIVIL ENGINEER 5-21-13 DATE

8-19-13
PLANS APPROVAL DATE

REGISTERED PROFESSIONAL ENGINEER C. J. SIMS No. C46471 Exp. 6-30-13 CIVIL STATE OF CALIFORNIA

The State of California or its officers or agents shall not be responsible for the accuracy or completeness of electronic copies of this plan sheet.

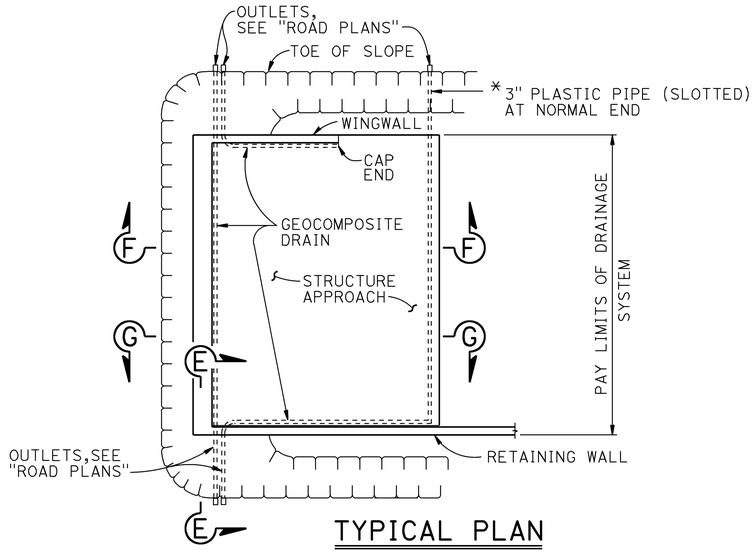

TYPICAL PLAN

1" = 10'

* FOR PIPE LAYOUT AT STAGGERED END, SEE "DETAIL B"

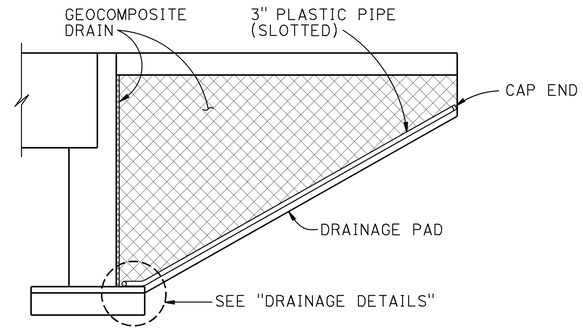

CANTILEVER WINGWALL

SECTION F-F

1/4" = 1'-0"

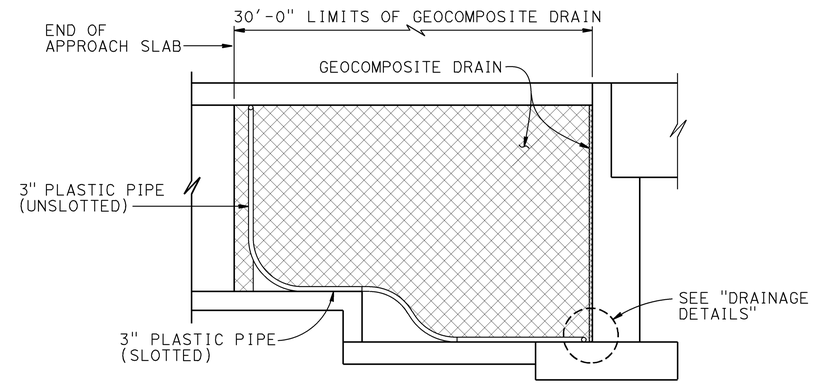

RETAINING WALL WINGWALL DRAINAGE DETAILS

SECTION G-G

1/4" = 1'-0"

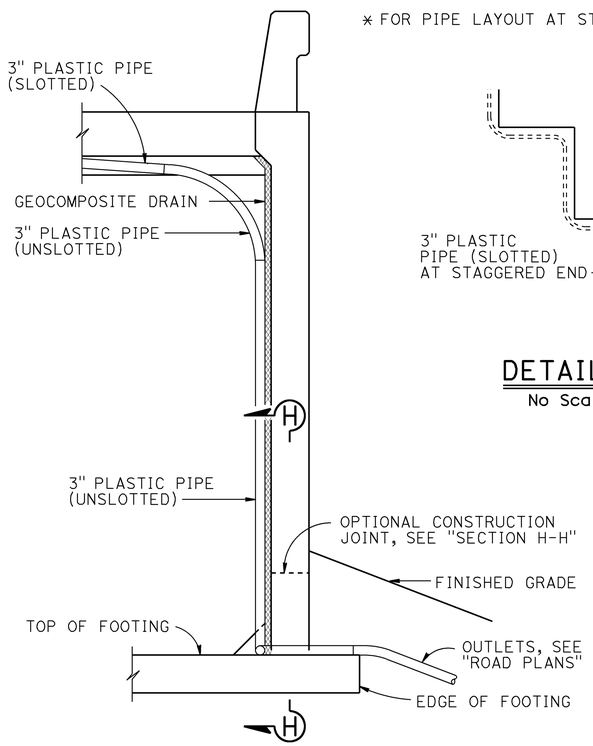

SECTION E-E

1/2" = 1'-0"

NOTE: Bends and junctions in 3" plastic pipe are 30" radius Min

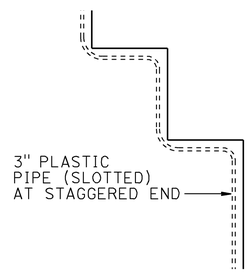

DETAIL B

No Scale

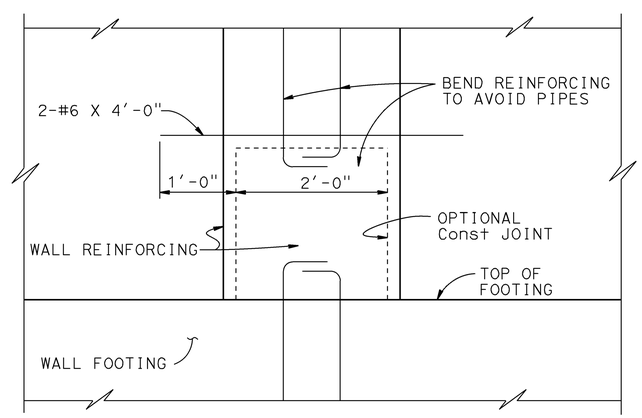

SECTION H-H

1" = 1'-0"

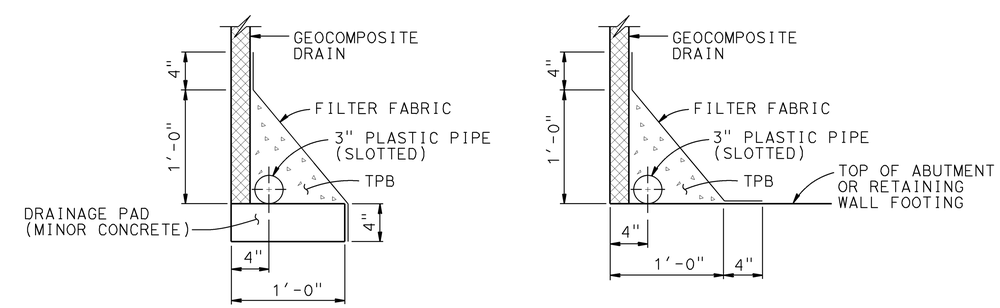

WITHOUT FOOTING

WITH FOOTING

DRAINAGE DETAILS

1 1/2" = 1'-0"

STANDARD DRAWING

FILE NO. xs3-110

APPROVAL DATE July 2011

STATE OF CALIFORNIA DEPARTMENT OF TRANSPORTATION

DIVISION OF ENGINEERING SERVICES

BRIDGE NO. 25-0150

POST MILE R031.30

SLY PARK ROAD UC (REPLACE)

STRUCTURE APPROACH DRAINAGE DETAILS

DS OSD 2147A (ENGLISH STANDARD DRAWING "XS" BORDER REV. (02-02-11)

ORIGINAL SCALE IN INCHES FOR REDUCED PLANS 0 1 2 3

UNIT: 3578
PROJECT NUMBER & PHASE: 03000000721
CONTRACT NO.: 03-0F2201

DISREGARD PRINTS BEARING EARLIER REVISION DATES

REVISION DATES 1-10-13

SHEET 22 OF 27

FILE => 25-0150-x-appdr.dgn

USERNAME => s124832 DATE PLOTTED => 01-AUG-2013 TIME PLOTTED => 13:07

DIST	COUNTY	ROUTE	POST MILES TOTAL PROJECT	SHEET No	TOTAL SHEETS
03	ED	50	R30.7/R31.7	115	119

CERTIFIED ENGINEERING GEOLOGIST 3-20-13

8-19-13
PLANS APPROVAL DATE

PROFESSIONAL GEOLOGIST Reid Buell No. 1481 Exp. 4-30-13 CERTIFIED ENGINEERING GEOLOGIST STATE OF CALIFORNIA

The State of California or its officers or agents shall not be responsible for the accuracy or completeness of electronic copies of this plan sheet.

This LOTB sheet was prepared in accordance with the Caltrans Soil & Rock Logging, Classification, & Presentation Manual (2010 Edition).
See 2010 Standard Plans A10F and A10G for Soil Legend, and A10H for Rock Legend.

BENCH MARK

PRHV 3113 Elev = 3946.85
Fnd CDOT Brass Disk
61.27′ Lt, "A1" Line, ℄ Rte 50
Sta 133+38.11
NGVD 29

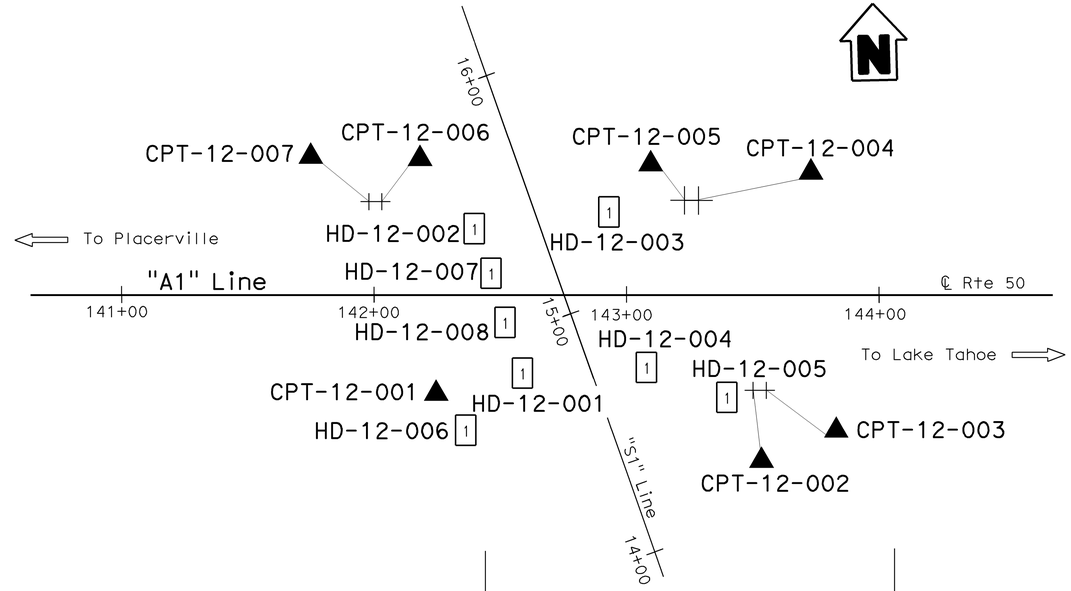

PLAN

1" = 30′

Note: No groundwater encountered during field investigation.

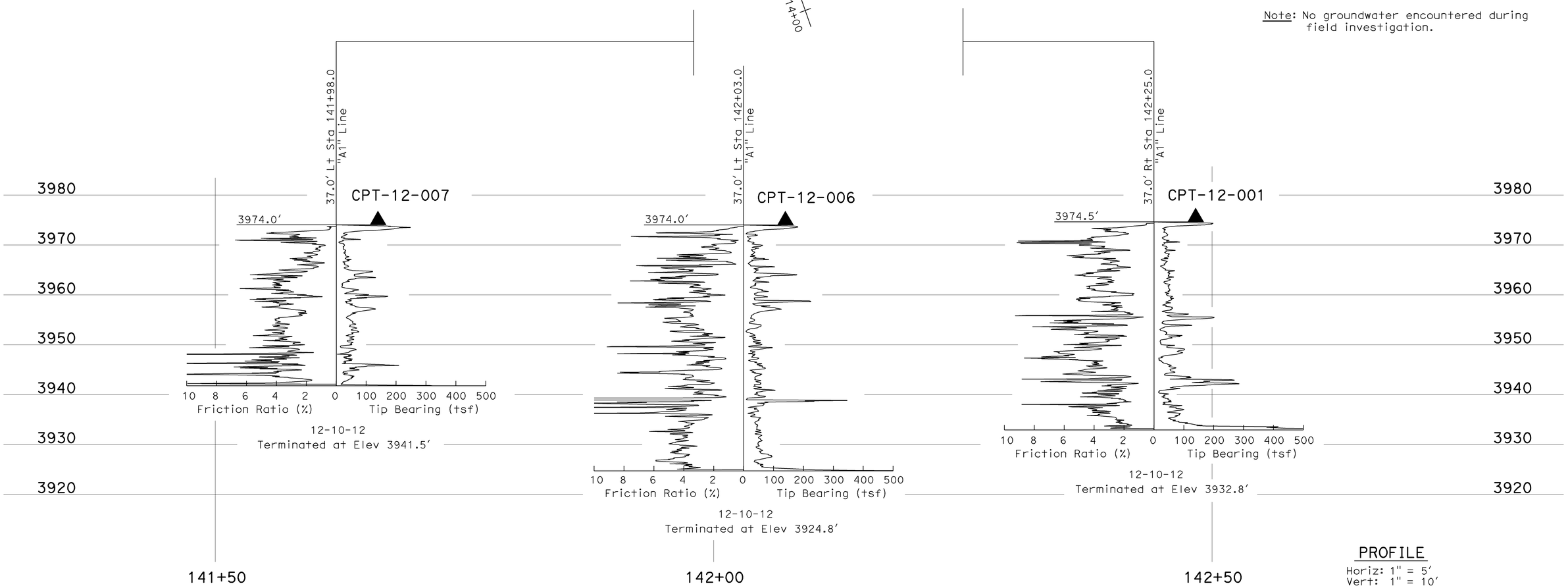

PROFILE

Horiz: 1" = 5′
Vert: 1" = 10′

ENGINEERING SERVICES	MATERIALS AND GEOTECHNICAL SERVICES	STATE OF CALIFORNIA DEPARTMENT OF TRANSPORTATION	DIVISION OF ENGINEERING SERVICES STRUCTURE DESIGN DESIGN BRANCH 3	BRIDGE NO. 25-0150 POST MILE R031.3	SLY PARK ROAD UC (REPLACE) LOG OF TEST BORINGS 1 OF 5
FUNCTIONAL SUPERVISOR NAME: R. Bibbens	DRAWN BY: W. Tang 01/13 CHECKED BY: A. Barrie	FIELD INVESTIGATION BY: T. Alderman			

OGS CIVIL LOG OF TEST BORINGS SHEET

ORIGINAL SCALE IN INCHES FOR REDUCED PLANS 0 1 2 3

UNIT: 3643
PROJECT NUMBER & PHASE: 03000000721 CONTRACT NO.: 03-0F2201

DISREGARD PRINTS BEARING EARLIER REVISION DATES → REVISION DATES 01-29-13 03-01-13 03-13-13

SHEET 23 OF 27

FILE => 25-0150-y-ltb1of5.dgn

USERNAME => s124832 DATE PLOTTED => 01-AUG-2013 TIME PLOTTED => 13:07

DIST	COUNTY	ROUTE	POST MILES TOTAL PROJECT	SHEET No	TOTAL SHEETS
03	ED	50	R30.7/R31.7	116	119

CERTIFIED ENGINEERING GEOLOGIST 3-20-13

8-19-13
PLANS APPROVAL DATE

PROFESSIONAL GEOLOGIST
Reid Buell
No. 1481
Exp. 4-30-13
CERTIFIED ENGINEERING GEOLOGIST
STATE OF CALIFORNIA

The State of California or its officers or agents shall not be responsible for the accuracy or completeness of electronic copies of this plan sheet.

This LOTB sheet was prepared in accordance with the Caltrans Soil & Rock Logging, Classification, & Presentation Manual (2010 Edition).
See 2010 Standard Plans A10F and A10G for Soil Legend, and A10H for Rock Legend.

FOR PLAN VIEW, SEE
"LOG OF TEST BORINGS 1 OF 5"

Note: No groundwater encountered during field investigation.

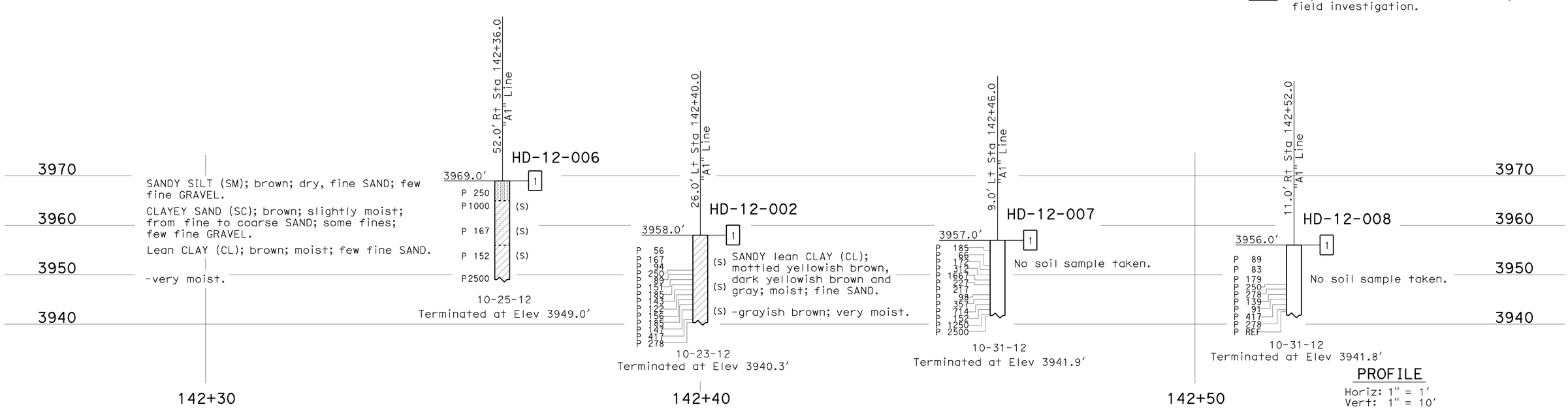

PROFILE
Horiz: 1" = 1'
Vert: 1" = 10'

ENGINEERING SERVICES	MATERIALS AND GEOTECHNICAL SERVICES	STATE OF CALIFORNIA DEPARTMENT OF TRANSPORTATION	DIVISION OF ENGINEERING SERVICES STRUCTURE DESIGN DESIGN BRANCH 3	BRIDGE NO. 25-0150 POST MILE R031.3	SLY PARK ROAD UC (REPLACE)
FUNCTIONAL SUPERVISOR NAME: R. Bibbens	DRAWN BY: W. Tang 01/13 CHECKED BY: A. Barrie	FIELD INVESTIGATION BY: T. Alderman			LOG OF TEST BORINGS 2 OF 5

OGS CIVIL LOG OF TEST BORINGS SHEET

ORIGINAL SCALE IN INCHES FOR REDUCED PLANS 0 1 2 3

UNIT: 3643
PROJECT NUMBER & PHASE: 03000000721 CONTRACT NO.: 03-0F2201

DISREGARD PRINTS BEARING EARLIER REVISION DATES

REVISION DATES 01-28-13 03-01-13 03-13-13

SHEET 24 OF 27

FILE => 25-0150-y-ltb2of5.dgn

USERNAME => s124832 DATE PLOTTED => 01-AUG-2013 TIME PLOTTED => 13:07

DIST	COUNTY	ROUTE	POST MILES TOTAL PROJECT	SHEET No	TOTAL SHEETS
03	ED	50	R30.7/R31.7	117	119

CERTIFIED ENGINEERING GEOLOGIST 3-20-13

8-19-13
PLANS APPROVAL DATE

PROFESSIONAL GEOLOGIST
Reid Buell
No. 1481
Exp. 4-30-13
CERTIFIED ENGINEERING GEOLOGIST
STATE OF CALIFORNIA

The State of California or its officers or agents shall not be responsible for the accuracy or completeness of electronic copies of this plan sheet.

This LOTB sheet was prepared in accordance with the Caltrans Soil & Rock Logging, Classification, & Presentation Manual (2010 Edition).
See 2010 Standard Plans A10F and A10G for Soil Legend, and A10H for Rock Legend.

FOR PLAN VIEW, SEE
"LOG OF TEST BORINGS 1 OF 5"

Note: No groundwater encountered during field investigation.

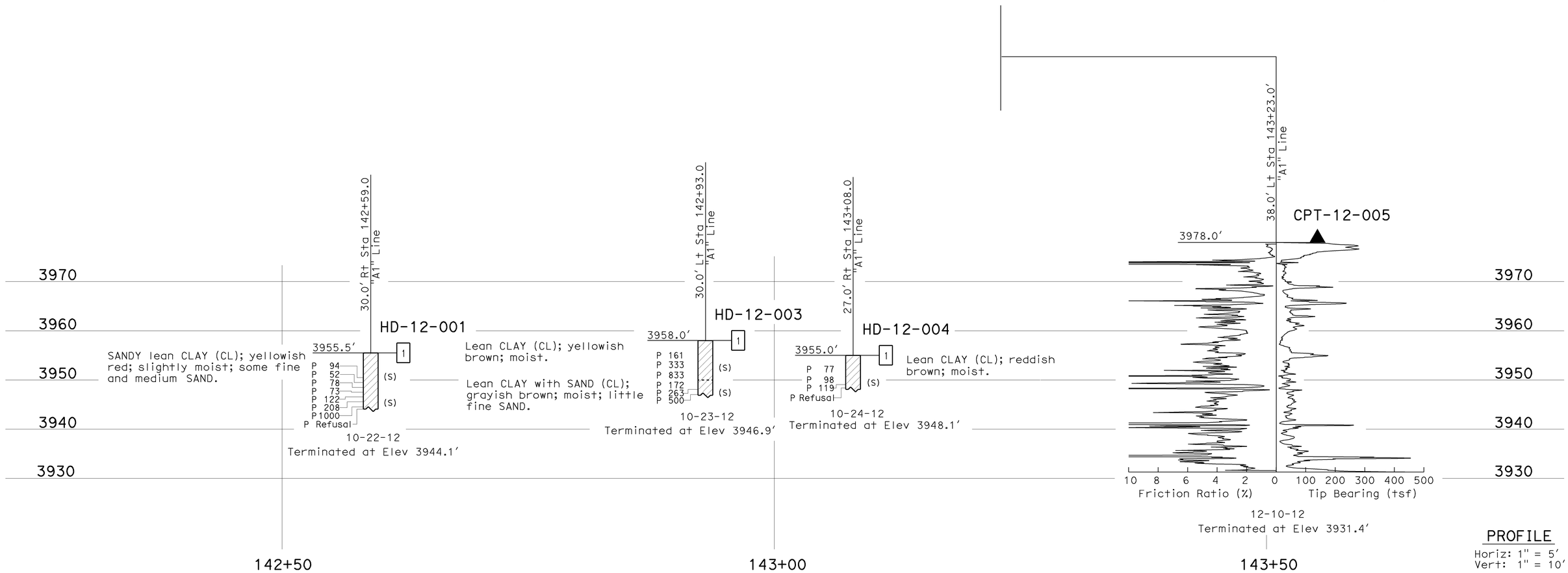

PROFILE
Horiz: 1" = 5'
Vert: 1" = 10'

ENGINEERING SERVICES	MATERIALS AND GEOTECHNICAL SERVICES	STATE OF CALIFORNIA DEPARTMENT OF TRANSPORTATION	DIVISION OF ENGINEERING SERVICES STRUCTURE DESIGN DESIGN BRANCH 3	BRIDGE NO. 25-0150 POST MILE R031.3	SLY PARK ROAD UC (REPLACE) LOG OF TEST BORINGS 3 OF 5
FUNCTIONAL SUPERVISOR NAME: R. Bibbens	DRAWN BY: W. Tang 01/13 CHECKED BY: A. Barrie	FIELD INVESTIGATION BY: T. Alderman			

OGS CIVIL LOG OF TEST BORINGS SHEET

ORIGINAL SCALE IN INCHES FOR REDUCED PLANS 0 1 2 3

UNIT: 3643
PROJECT NUMBER & PHASE: 03000000721
CONTRACT NO.: 03-0F2201

DISREGARD PRINTS BEARING EARLIER REVISION DATES

REVISION DATES 01-24-13 03-01-13 03-15-13 03-19-13

SHEET 25 OF 27

FILE => 25-0150-y-ltb3of5.dgn

USERNAME => s124832 DATE PLOTTED => 01-AUG-2013 TIME PLOTTED => 13:07

DIST	COUNTY	ROUTE	POST MILES TOTAL PROJECT	SHEET No	TOTAL SHEETS
03	ED	50	R30.7/R31.7	118	119

CERTIFIED ENGINEERING GEOLOGIST 3-20-13

8-19-13
PLANS APPROVAL DATE

PROFESSIONAL GEOLOGIST Reid Buell No. 1481 Exp. 4-30-13 CERTIFIED ENGINEERING GEOLOGIST STATE OF CALIFORNIA

The State of California or its officers or agents shall not be responsible for the accuracy or completeness of electronic copies of this plan sheet.

This LOTB sheet was prepared in accordance with the Caltrans Soil & Rock Logging, Classification, & Presentation Manual (2010 Edition).
See 2010 Standard Plans A10F and A10G for Soil Legend, and A10H for Rock Legend.

FOR PLAN VIEW, SEE
"LOG OF TEST BORINGS 1 OF 5"

Note: No groundwater encountered during field investigation.

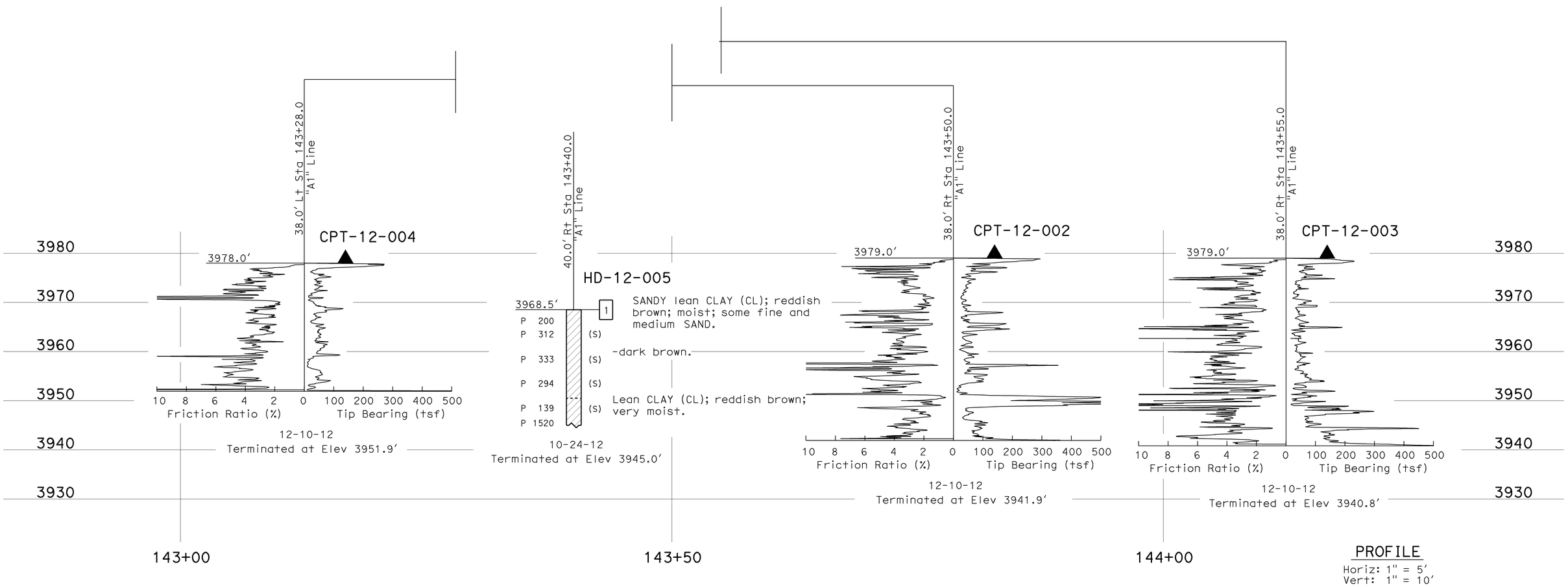

PROFILE
Horiz: 1" = 5'
Vert: 1" = 10'

ENGINEERING SERVICES	MATERIALS AND GEOTECHNICAL SERVICES	STATE OF CALIFORNIA DEPARTMENT OF TRANSPORTATION	DIVISION OF ENGINEERING SERVICES STRUCTURE DESIGN DESIGN BRANCH 3	BRIDGE NO. 25-0150 POST MILE R031.3	SLY PARK ROAD UC (REPLACE) LOG OF TEST BORINGS 4 OF 5
FUNCTIONAL SUPERVISOR NAME: R. Bibbens	DRAWN BY: W. Tang 01/13 CHECKED BY: A. Barrie	FIELD INVESTIGATION BY: T. Alderman			

OGS CIVIL LOG OF TEST BORINGS SHEET

ORIGINAL SCALE IN INCHES FOR REDUCED PLANS 0 1 2 3

UNIT: 3643
PROJECT NUMBER & PHASE: 03000000721 CONTRACT NO.: 03-0F2201

DISREGARD PRINTS BEARING EARLIER REVISION DATES → 01-28-13 03-01-13 03-13-13

SHEET 26 OF 27

FILE => 25-0150-y-ltb4of5.dgn

USERNAME => s124832 DATE PLOTTED => 01-AUG-2013 TIME PLOTTED => 13:08

FED. ROAD DIV. NO.	STATE	PROJ. NO.	FISCAL YEAR	SHEET NO.	TOTAL SHEETS
7	CAL.			123	123

DIST.	COUNTY	ROUTE	SECTION	SHEET NO.	TOTAL SHEETS
III	ED	50	F	44	71

BRIDGE ENGINEER — CIVIL ENGINEER—LICENSE 5303

DATE APPROVED December 20, 1962

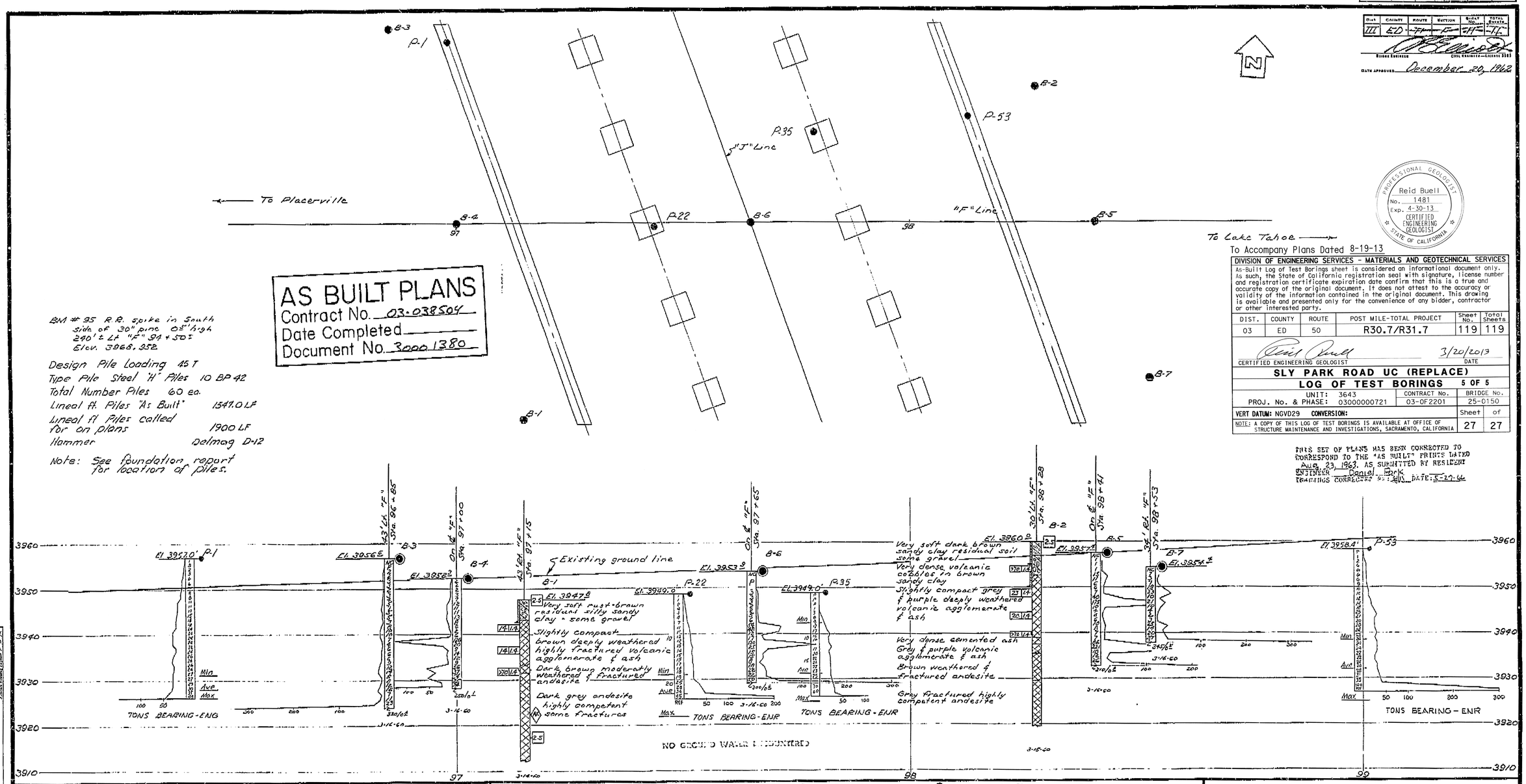

AS BUILT PLANS
Contract No. 03-038504
Date Completed
Document No. 3000 1380

Reid Buell
No. 1481
Exp. 4-30-13
CERTIFIED ENGINEERING GEOLOGIST
PROFESSIONAL GEOLOGIST
STATE OF CALIFORNIA

To Accompany Plans Dated 8-19-13

DIVISION OF ENGINEERING SERVICES - MATERIALS AND GEOTECHNICAL SERVICES

As-Built Log of Test Borings sheet is considered an informational document only. As such, the State of California registration seal with signature, license number and registration certificate expiration date confirm that this is a true and accurate copy of the original document. It does not attest to the accuracy or validity of the information contained in the original document. This drawing is available and presented only for the convenience of any bidder, contractor or other interested party.

DIST.	COUNTY	ROUTE	POST MILE-TOTAL PROJECT	Sheet No.	Total Sheets
03	ED	50	R30.7/R31.7	119	119

CERTIFIED ENGINEERING GEOLOGIST — DATE 3/20/2013

SLY PARK ROAD UC (REPLACE)

LOG OF TEST BORINGS 5 OF 5

UNIT: 3643 — CONTRACT No. 03-0F2201 — BRIDGE No. 25-0150

PROJ. No. & PHASE: 03000000721

VERT DATUM: NGVD29 CONVERSION: — Sheet of 27 27

NOTE: A COPY OF THIS LOG OF TEST BORINGS IS AVAILABLE AT OFFICE OF STRUCTURE MAINTENANCE AND INVESTIGATIONS, SACRAMENTO, CALIFORNIA

THIS SET OF PLANS HAS BEEN CORRECTED TO CORRESPOND TO THE "AS BUILT" PRINTS DATED Aug. 23, 1963, AS SUBMITTED BY RESIDENT ENGINEER Daniel Park
DRAFTING CORRECTED BY: DATE: 5-27-64

BRIDGE DEPARTMENT

BRAWN: M. Matsuoka 4-19-60
CHECKED: R. Reid 4-22-60
Approved Recommended by: Chief Bridge Engineer
Chief Bridge Engineer

CLASSIFICATION OF MATERIAL BASED ON STANDARD GRADE SIZE LIMITS

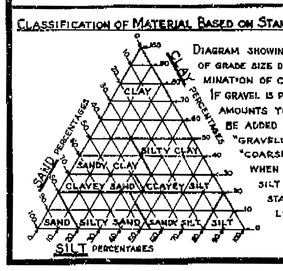

DIAGRAM SHOWING THE BASIS FOR ESTIMATES OF GRADE SIZE DISTRIBUTION USED IN DETERMINATION OF CLASS NAMES. IF GRAVEL IS PRESENT IN APPRECIABLE AMOUNTS THE TERM "GRAVELLY" MAY BE ADDED TO THE CLASS NAME, VIZ, "GRAVELLY SAND." THE TERMS "COARSE", "MEDIUM" AND "FINE" WHEN USED TO DESCRIBE SAND, SILT AND GRAVEL REFER TO STANDARD GRADE SIZE LIMITS.

LEGEND OF EARTH MATERIALS

- GRAVEL
- SAND
- SILT
- CLAY
- SANDY CLAY OR CLAYEY SAND
- SANDY SILT OR SILTY SAND
- SILTY CLAY OR CLAYEY SILT
- PEAT AND OTHER ORGANIC MATTER
- FILL MATERIAL
- IGNEOUS ROCK
- SEDIMENTARY ROCK
- METAMORPHIC ROCK

LEGEND OF BORING OPERATIONS

- PLAN OF ANY BORING
- PENETROMETER
- 2¼" CONE PENETROMETER
- SAMPLER BORING (DRY)
- ROTARY BORING (WET)
- AUGER BORING (DRY)
- JET BORING
- CORE BORING
- TEST PIT

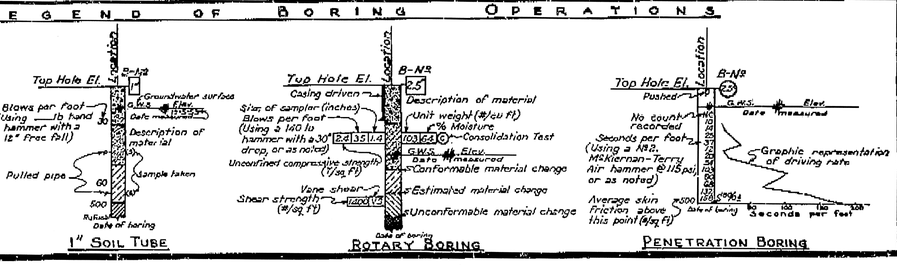

NOTE

Classification of earth material as shown on this sheet is based upon field inspection and is not to be construed to imply mechanical analysis.

STATE OF CALIFORNIA
DEPARTMENT OF PUBLIC WORKS
DIVISION OF HIGHWAYS

SLY PARK ROAD UNDERCROSSING

LOG OF TEST BORINGS

SCALE 1" = 10' — BRIDGE 25-42 — FILE — DRAWING C-6917-10

PREL. DRAWING NO. P-6917 16

23

146