STP-P070(122)E

Dist	COUNTY	ROUTE	POST MILES TOTAL PROJECT	SHEET No.	TOTAL SHEETS
03	But	70	28.8/41.0	1	37

INDEX OF PLANS

SHEET No.	DESCRIPTION
1	TITLE AND LOCATION MAP
2-5	TYPICAL CROSS SECTIONS
6-16	CONSTRUCTION DETAILS
17	CONSTRUCTION AREA SIGNS
18-25	SUMMARY OF QUANTITIES
26-37	REVISED STANDARD PLANS

THE STANDARD PLANS LIST APPLICABLE TO THIS CONTRACT IS INCLUDED IN THE NOTICE TO BIDDERS AND SPECIAL PROVISIONS BOOK.

STATE OF CALIFORNIA

DEPARTMENT OF TRANSPORTATION

PROJECT PLANS FOR CONSTRUCTION ON

STATE HIGHWAY

IN BUTTE COUNTY
AT AND NEAR JARBO GAP
FROM WEST BRANCH SIDEHILL VIADUCT
TO NORTH FORK FEATHER RIVER BRIDGE

TO BE SUPPLEMENTED BY STANDARD PLANS DATED MAY 2006

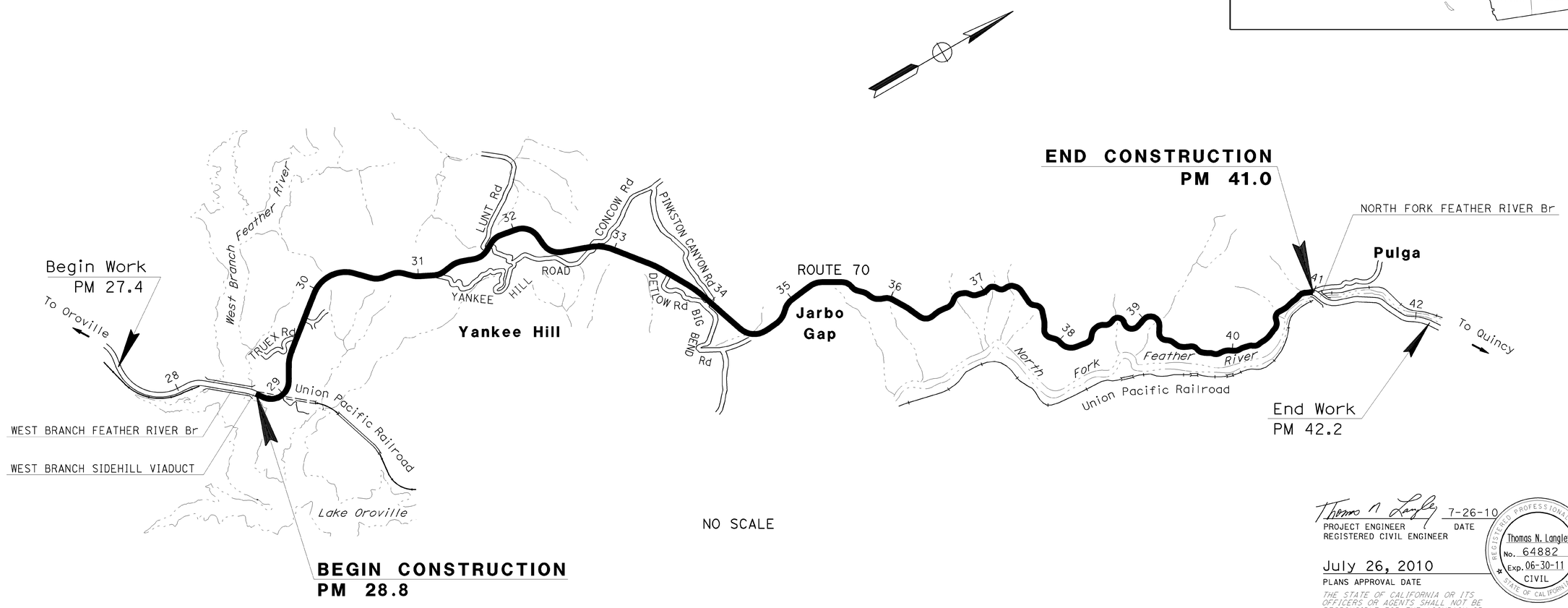

PROJECT MANAGER MARTIN VILLANUEVA

DESIGN ENGINEER GARY BIRCH

Thomas N Langley 7-26-10
PROJECT ENGINEER DATE
REGISTERED CIVIL ENGINEER

July 26, 2010
PLANS APPROVAL DATE

REGISTERED PROFESSIONAL ENGINEER Thomas N. Langley No. 64882 Exp. 06-30-11 CIVIL STATE OF CALIFORNIA

THE STATE OF CALIFORNIA OR ITS OFFICERS OR AGENTS SHALL NOT BE RESPONSIBLE FOR THE ACCURACY OR COMPLETENESS OF SCANNED COPIES OF THIS PLAN SHEET.

THE CONTRACTOR SHALL POSSESS THE CLASS (OR CLASSES) OF LICENSE AS SPECIFIED IN THE "NOTICE TO BIDDERS."

CONTRACT No.	03-0A6504
PROJECT ID	0300020001

LAST REVISION 07-09-10 DATE PLOTTED => 18-AUG-2010 TIME PLOTTED => 15:26

Dist	COUNTY	ROUTE	POST MILES TOTAL PROJECT	SHEET No.	TOTAL SHEETS
03	But	70	28.8/41.0	2	37

Thomas N Langley 7-26-10
REGISTERED CIVIL ENGINEER DATE

7-26-10
PLANS APPROVAL DATE

REGISTERED PROFESSIONAL ENGINEER Thomas N. Langley No. 64882 Exp. 06-30-11 CIVIL STATE OF CALIFORNIA

THE STATE OF CALIFORNIA OR ITS OFFICERS OR AGENTS SHALL NOT BE RESPONSIBLE FOR THE ACCURACY OR COMPLETENESS OF SCANNED COPIES OF THIS PLAN SHEET.

NOTES:

1. DIMENSIONS OF THE PAVEMENT STRUCTURES (STRUCTURAL SECTIONS) ARE SUBJECT TO TOLERANCES SPECIFIED IN THE STANDARD SPECIFICATIONS.
2. SUPERELEVATION AS SHOWN OR AS DIRECTED BY THE ENGINEER.
3. FOR ACCURATE RIGHT OF WAY AND ACCESS DATA, SEE RIGHT OF WAY RECORD MAPS AT THE DISTRICT OFFICE.
4. EXACT LOCATIONS AND TYPES OF DIKES AND MBGR ARE SHOWN ON THE CONSTRUCTION DETAILS AND IN THE SUMMARY OF QUANTITIES SHEETS.
5. EXISTING UTILITY FACILITIES HAVE NOT BEEN PLOTTED ON THESE PLANS.

ABBREVIATIONS:

HMA-W HOT MIX ASPHALT USING WARM MIX
ASPHALT TECHNOLOGIES

TYPICAL STRUCTURAL SECTIONS

1
- Exist
- 0.25′ & Var AC
- 0.67′ CTB
- 0.50′ AS

2
- 0.25′ HMA-W (TYPE A)
- 0.15′ COLD PLANE AC PAVEMENT

3
- 0.25′ HMA-W (TYPE A)
- 0.25′ COLD PLANE AC PAVEMENT

4
- 0.10′ HMA (TYPE A)

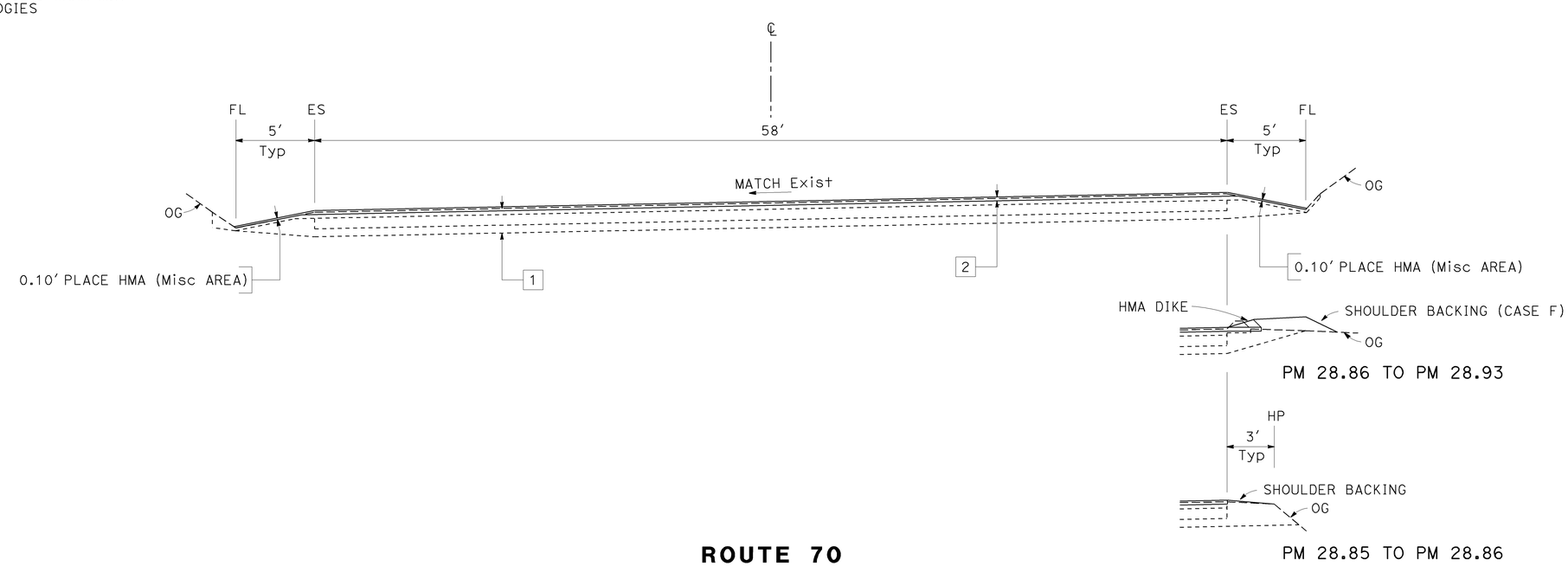

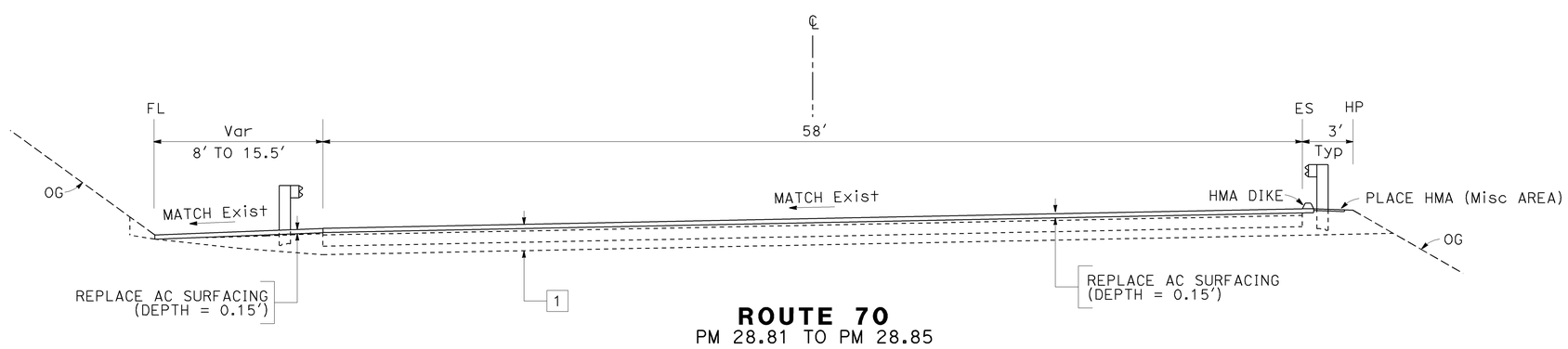

TYPICAL CROSS SECTIONS

NO SCALE

X-1

STATE OF CALIFORNIA - DEPARTMENT OF TRANSPORTATION
Caltrans®
DESIGN
FUNCTIONAL SUPERVISOR: GARY S. BIRCH
CALCULATED-DESIGNED BY: THOMAS N. LANGLEY
CHECKED BY: GARY DUGHI
REVISED BY
DATE REVISED

LAST REVISION 07-26-10
DATE PLOTTED => 10-AUG-2010
TIME PLOTTED => 07:55

Dist	COUNTY	ROUTE	POST MILES TOTAL PROJECT	SHEET No.	TOTAL SHEETS
03	But	70	28.8/41.0	3	37

Thomas N Langley 7-26-10
REGISTERED CIVIL ENGINEER DATE

7-26-10
PLANS APPROVAL DATE

REGISTERED PROFESSIONAL ENGINEER
Thomas N. Langley
No. 64882
Exp. 06-30-11
CIVIL
STATE OF CALIFORNIA

THE STATE OF CALIFORNIA OR ITS OFFICERS OR AGENTS SHALL NOT BE RESPONSIBLE FOR THE ACCURACY OR COMPLETENESS OF SCANNED COPIES OF THIS PLAN SHEET.

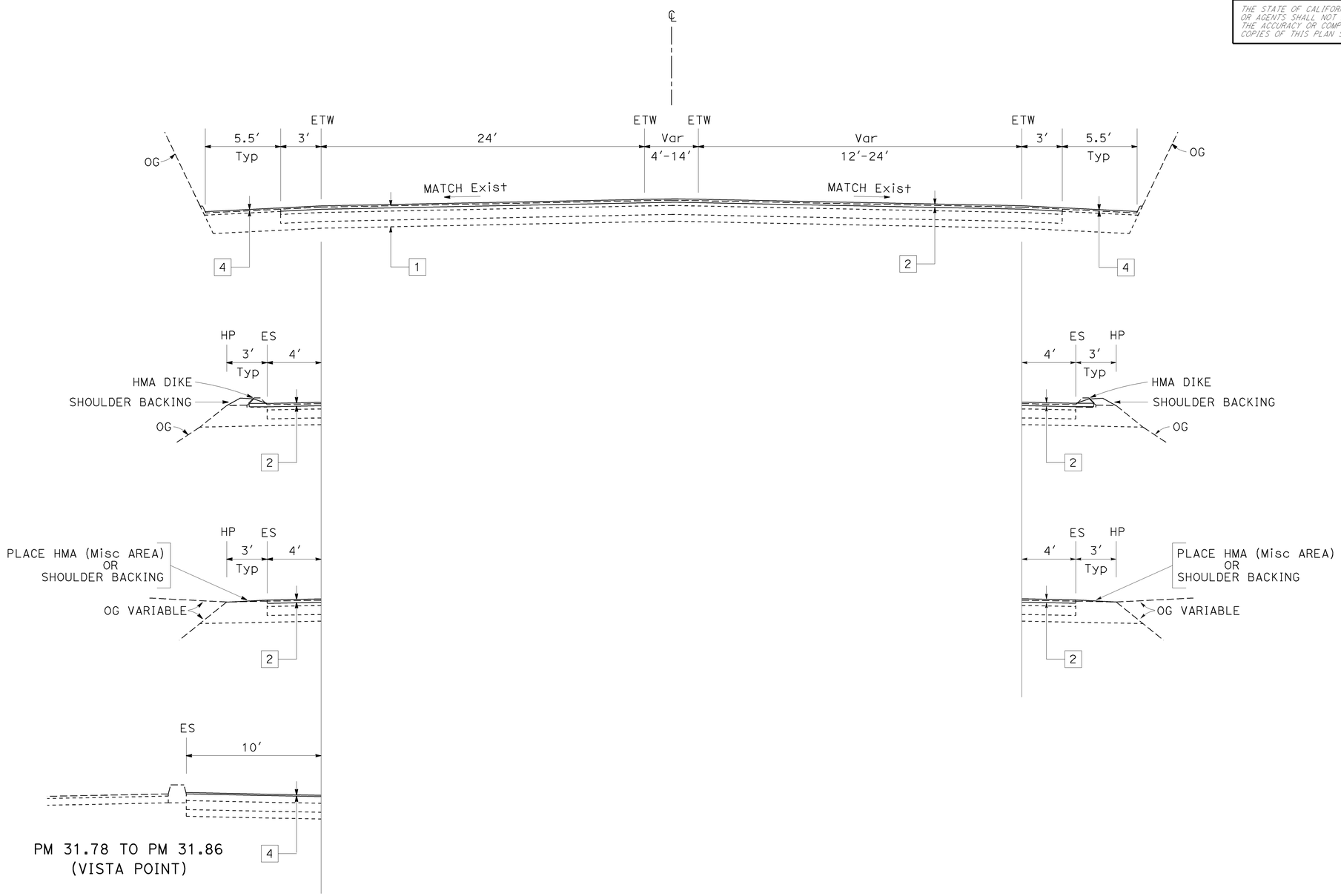

ROUTE 70
PM 29.3 TO PM 33.1

TYPICAL CROSS SECTIONS

NO SCALE

X-2

STATE OF CALIFORNIA - DEPARTMENT OF TRANSPORTATION
Caltrans
DESIGN

FUNCTIONAL SUPERVISOR: GARY S. BIRCH
CALCULATED-DESIGNED BY: THOMAS N. LANGLEY
CHECKED BY: GARY DUGHI
REVISED BY
DATE REVISED

LAST REVISION 07-09-10
DATE PLOTTED => 10-AUG-2010
TIME PLOTTED => 07:55

Dist	COUNTY	ROUTE	POST MILES TOTAL PROJECT	SHEET No.	TOTAL SHEETS
03	But	70	28.8/41.0	4	37

Thomas N Langley 7-26-10
REGISTERED CIVIL ENGINEER DATE

7-26-10
PLANS APPROVAL DATE

REGISTERED PROFESSIONAL ENGINEER
Thomas N. Langley
No. 64882
Exp. 06-30-11
CIVIL
STATE OF CALIFORNIA

THE STATE OF CALIFORNIA OR ITS OFFICERS OR AGENTS SHALL NOT BE RESPONSIBLE FOR THE ACCURACY OR COMPLETENESS OF SCANNED COPIES OF THIS PLAN SHEET.

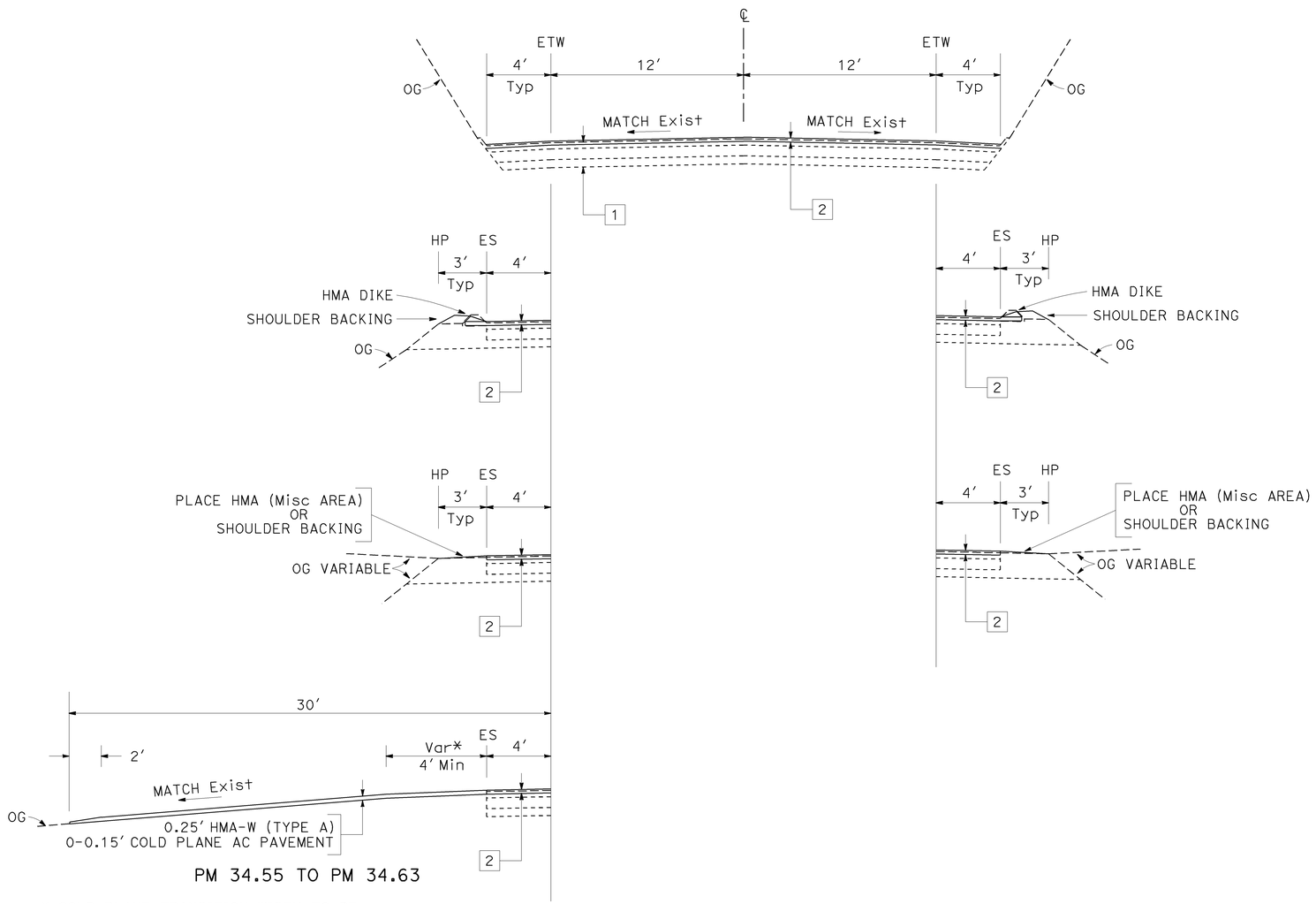

PM 34.55 TO PM 34.63

* COLD PLANE TRANSITION WIDTH TO BE DETERMINED BY ENGINEER

ROUTE 70

PM 33.1 TO PM 34.64

TYPICAL CROSS SECTIONS

NO SCALE

X-3

REVISED BY	DATE REVISED

CALCULATED-DESIGNED BY	CHECKED BY
THOMAS N. LANGLEY	GARY DUGHI

FUNCTIONAL SUPERVISOR: GARY S. BIRCH

STATE OF CALIFORNIA - DEPARTMENT OF TRANSPORTATION

Caltrans®

DESIGN

LAST REVISION 07-09-10 | DATE PLOTTED => 10-AUG-2010 | TIME PLOTTED => 07:55

Dist	COUNTY	ROUTE	POST MILES TOTAL PROJECT	SHEET No.	TOTAL SHEETS
03	But	70	28.8/41.0	5	37

Thomas N Langley 7-26-10
REGISTERED CIVIL ENGINEER DATE

7-26-10
PLANS APPROVAL DATE

REGISTERED PROFESSIONAL ENGINEER
Thomas N. Langley
No. 64882
Exp. 06-30-11
CIVIL
STATE OF CALIFORNIA

THE STATE OF CALIFORNIA OR ITS OFFICERS OR AGENTS SHALL NOT BE RESPONSIBLE FOR THE ACCURACY OR COMPLETENESS OF SCANNED COPIES OF THIS PLAN SHEET.

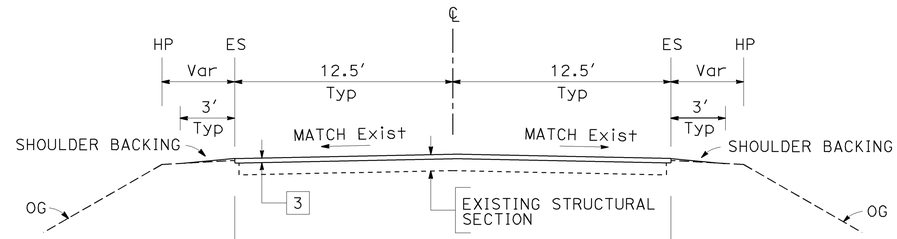

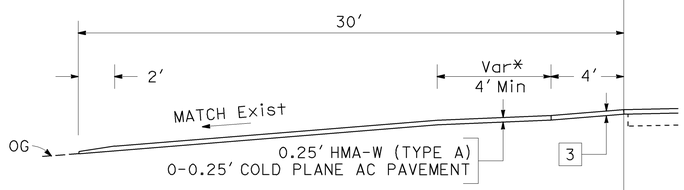

PM 34.93 TO PM 34.99
PM 35.33 TO PM 35.39
PM 38.64 TO PM 38.67

* COLD PLANE TRANSITION WIDTH TO BE DETERMINED BY ENGINEER

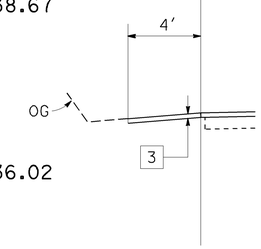

PM 35.90 TO PM 36.02

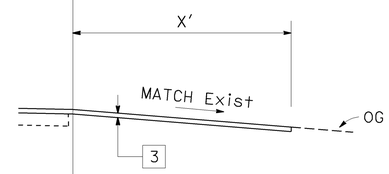

PM 35.78 TO PM 35.93 X = 12′
PM 37.66 TO PM 37.79 X = 12′
PM 38.38 TO PM 38.50 X = 2′
PM 38.63 TO PM 38.77 X = 6′
PM 39.17 TO PM 39.23 X = 12′

ROUTE 70
PM 34.64 TO PM 35.50
PM 35.55 TO PM 40.99

TYPICAL CROSS SECTIONS

NO SCALE

X-4

STATE OF CALIFORNIA - DEPARTMENT OF TRANSPORTATION
Caltrans
DESIGN

FUNCTIONAL SUPERVISOR: GARY S. BIRCH
CALCULATED-DESIGNED BY: THOMAS N. LANGLEY
CHECKED BY: GARY DUGHI
REVISED BY
DATE REVISED

LAST REVISION 07-09-10
DATE PLOTTED => 10-AUG-2010
TIME PLOTTED => 07:55

Dist	COUNTY	ROUTE	POST MILES TOTAL PROJECT	SHEET No.	TOTAL SHEETS
03	But	70	28.8/41.0	6	37

Thomas N Langley 7-26-10
REGISTERED CIVIL ENGINEER DATE

7-26-10
PLANS APPROVAL DATE

REGISTERED PROFESSIONAL ENGINEER Thomas N. Langley No. 64882 Exp. 06-30-11 CIVIL STATE OF CALIFORNIA

THE STATE OF CALIFORNIA OR ITS OFFICERS OR AGENTS SHALL NOT BE RESPONSIBLE FOR THE ACCURACY OR COMPLETENESS OF SCANNED COPIES OF THIS PLAN SHEET.

NOTES:

1. SEE TYPICAL CROSS SECTIONS FOR MORE INFORMATION.
2. LOCATIONS AND DIMENSIONS FOR REPLACE AC SURFACING (DIGOUTS) AND CONFORM DETAIL FOR MINOR ROADS AND DRIVEWAYS SHALL BE DETERMINED BY THE ENGINEER.
3. EXACT CONFORM LOCATIONS (INCLUDING BEGIN AND END CONSTRUCTION) SHALL BE DETERMINED BY ENGINEER
4. PAVE MINOR ROAD APPROACHES THAT ARE ALREADY PAVED UNLESS DIRECTED BY THE ENGINEER.

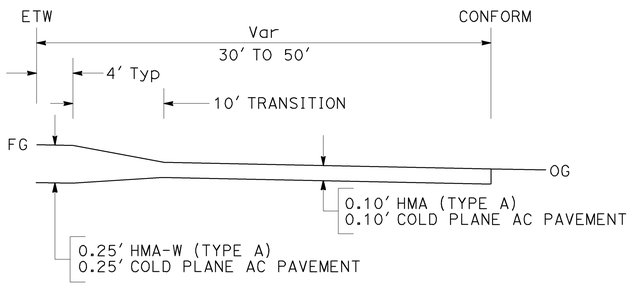

CONFORM DETAIL

MINOR ROADS AND DRIVEWAYS

SECTION

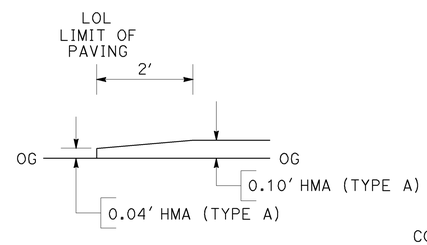

SECTION A-A

SECTION

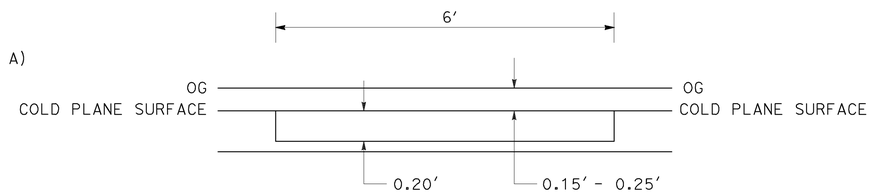

REPLACE AC SURFACING (DIGOUTS)

PM 28.8 TO PM 41.0

SECTION

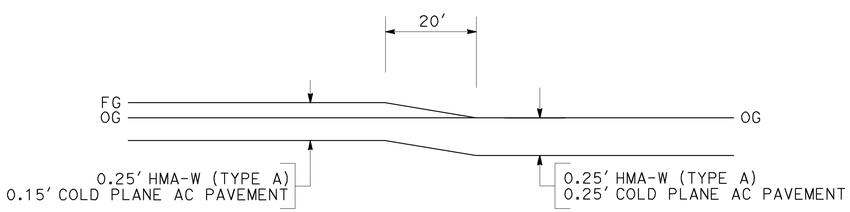

CONFORM DETAIL

PM 34.6

PROFILE

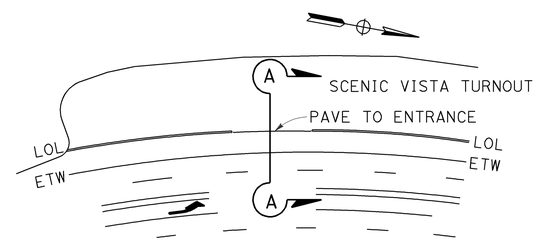

LIMITS OF PAVING

PM 31.8

PLAN

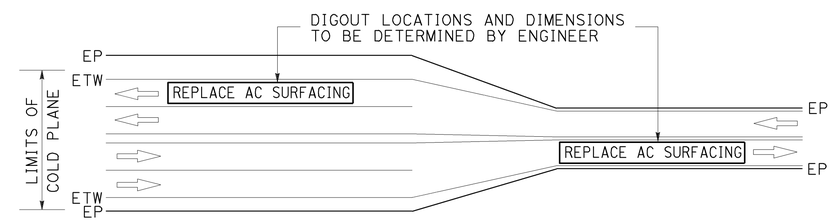

REPLACE AC SURFACING (DIGOUTS)

PM 28.8 TO PM 41.0

PLAN

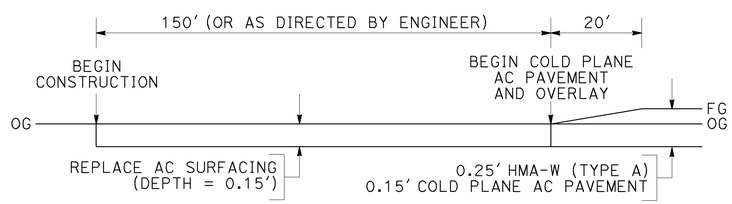

CONFORM DETAIL

PM 28.81 TO PM 28.85

PROFILE

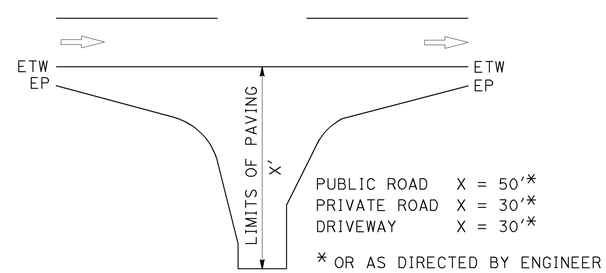

LIMITS OF PAVING

MINOR ROADS AND DRIVEWAYS

PLAN

CONSTRUCTION DETAILS

NO SCALE

C-1

STATE OF CALIFORNIA - DEPARTMENT OF TRANSPORTATION

Caltrans®

DESIGN

FUNCTIONAL SUPERVISOR: GARY S. BIRCH

CALCULATED-DESIGNED BY: THOMAS N. LANGLEY

CHECKED BY: GARY DUGHI

REVISED BY

DATE REVISED

LAST REVISION 07-26-10

DATE PLOTTED => 10-AUG-2010

TIME PLOTTED => 07:55

Dist	COUNTY	ROUTE	POST MILES TOTAL PROJECT	SHEET No.	TOTAL SHEETS
03	But	70	28.8/41.0	7	37

Thomas N Langley 7-26-10
REGISTERED CIVIL ENGINEER DATE

7-26-10
PLANS APPROVAL DATE

REGISTERED PROFESSIONAL ENGINEER
Thomas N. Langley
No. 64882
Exp. 06-30-11
CIVIL
STATE OF CALIFORNIA

THE STATE OF CALIFORNIA OR ITS OFFICERS OR AGENTS SHALL NOT BE RESPONSIBLE FOR THE ACCURACY OR COMPLETENESS OF SCANNED COPIES OF THIS PLAN SHEET.

LEGEND

- DIRECTION OF TRAFFIC
- DELINEATOR OR MARKER
- S DELINEATOR SPACING

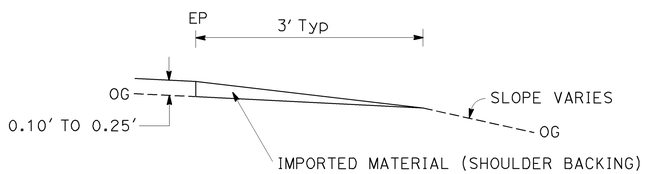

IMPORTED MATERIAL (SHOULDER BACKING)

PM 28.8 TO 41.0

SECTION

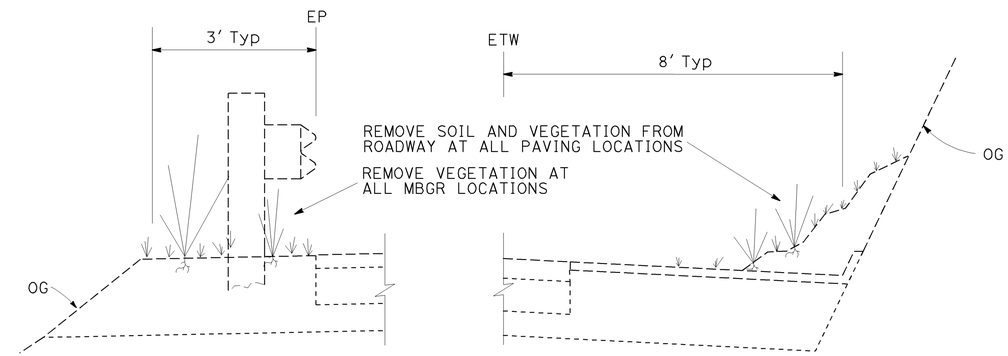

CLEARING AND GRUBBING

PM 28.8 TO PM 41.0

SECTION

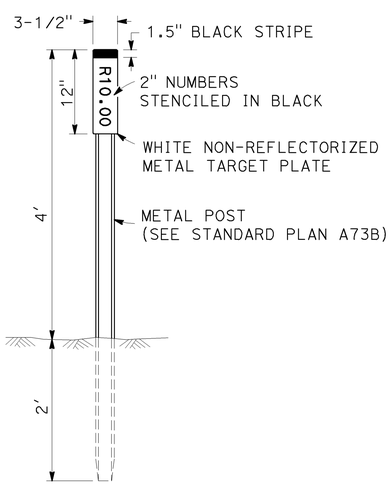

MARKER (CULVERT)

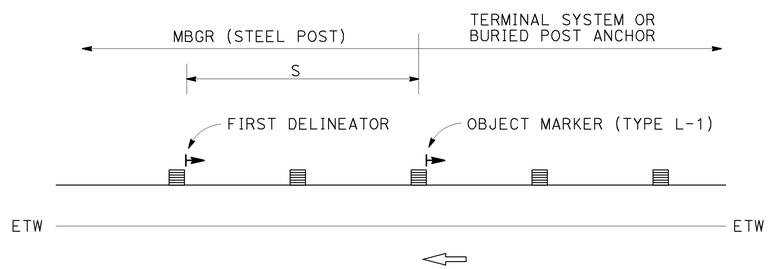

MARKER AND DELINEATOR

MBGR (Typ)

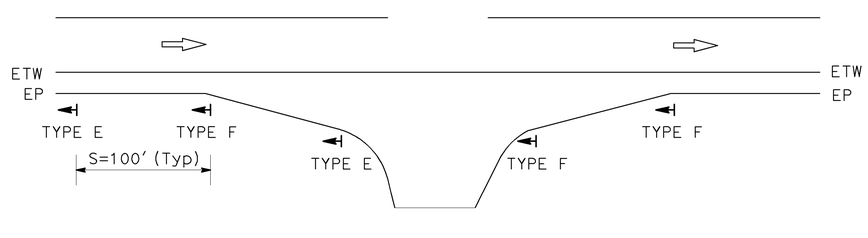

DELINEATOR

INTERSECTION PLACEMENT (Typ)

CONSTRUCTION DETAILS

NO SCALE

C-2

REVISED BY	DATE REVISED

THOMAS N. LANGLEY — GARY DUGHI

CALCULATED-DESIGNED BY — CHECKED BY

FUNCTIONAL SUPERVISOR — GARY S. BIRCH

STATE OF CALIFORNIA - DEPARTMENT OF TRANSPORTATION — DESIGN — Caltrans

LAST REVISION 07-09-10 — DATE PLOTTED => 10-AUG-2010 — TIME PLOTTED => 07:55

Dist	COUNTY	ROUTE	POST MILES TOTAL PROJECT	SHEET No.	TOTAL SHEETS
03	But	70	28.8/41.0	8	37

Thomas N Langley 7-26-10
REGISTERED CIVIL ENGINEER DATE

7-26-10
PLANS APPROVAL DATE

REGISTERED PROFESSIONAL ENGINEER
Thomas N. Langley
No. 64882
Exp. 06-30-11
CIVIL
STATE OF CALIFORNIA

THE STATE OF CALIFORNIA OR ITS OFFICERS OR AGENTS SHALL NOT BE RESPONSIBLE FOR THE ACCURACY OR COMPLETENESS OF SCANNED COPIES OF THIS PLAN SHEET.

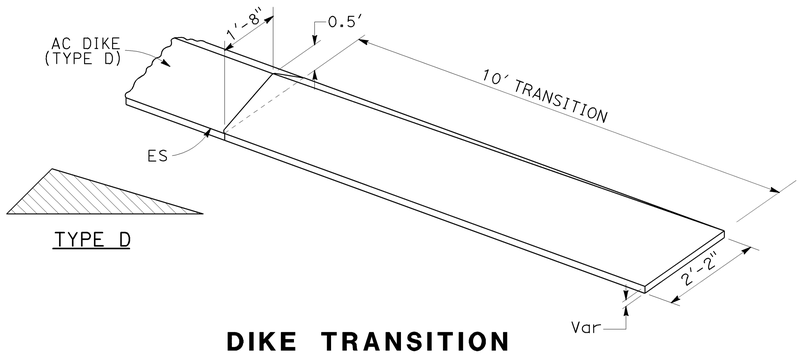

DIKE TRANSITION

BEGIN OR END TYPE D

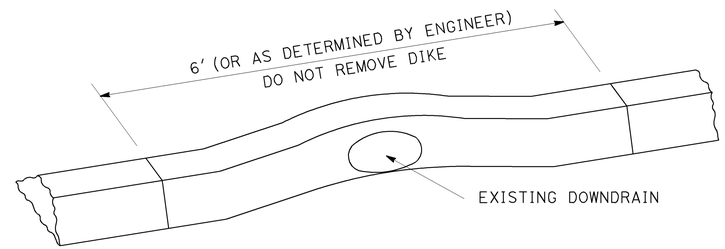

PROTECT DIKE AND DOWNDRAIN

PM 29.3 TO PM 34.6

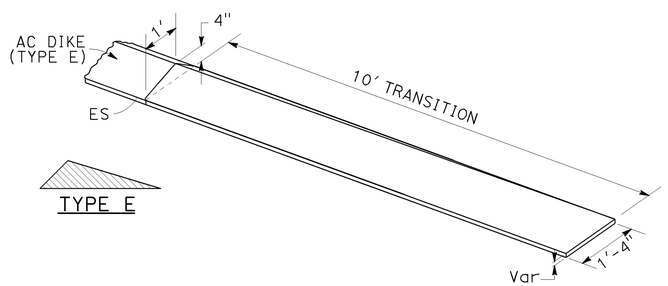

DIKE TRANSITION

BEGIN OR END TYPE E

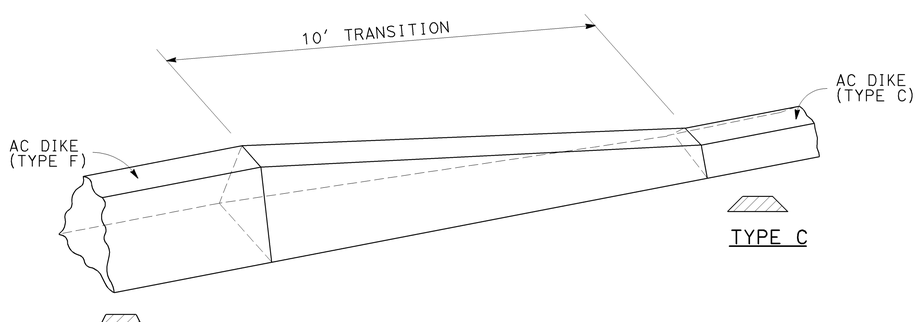

DIKE TRANSITION

TYPE C TO TYPE F

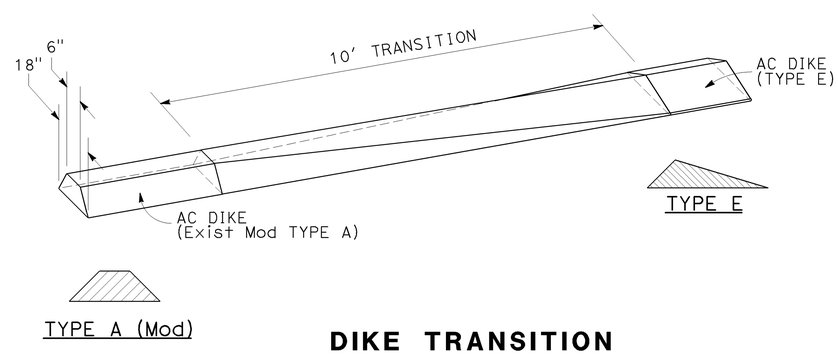

DIKE TRANSITION

TYPE A (Mod Exist) TO TYPE E

CONSTRUCTION DETAILS

NO SCALE

C-3

STATE OF CALIFORNIA - DEPARTMENT OF TRANSPORTATION
Caltrans®
DESIGN

FUNCTIONAL SUPERVISOR: GARY S. BIRCH
CALCULATED-DESIGNED BY: THOMAS N. LANGLEY
CHECKED BY: GARY DUGHI
REVISED BY
DATE REVISED

LAST REVISION 07-09-10
DATE PLOTTED => 10-AUG-2010
TIME PLOTTED => 07:55

Dist	COUNTY	ROUTE	POST MILES TOTAL PROJECT	SHEET No.	TOTAL SHEETS
03	But	70	28.8/41.0	9	37

Thomas N Langley 7-26-10
REGISTERED CIVIL ENGINEER DATE

7-26-10
PLANS APPROVAL DATE

REGISTERED PROFESSIONAL ENGINEER
Thomas N. Langley
No. 64882
Exp. 06-30-11
CIVIL
STATE OF CALIFORNIA

THE STATE OF CALIFORNIA OR ITS OFFICERS OR AGENTS SHALL NOT BE RESPONSIBLE FOR THE ACCURACY OR COMPLETENESS OF SCANNED COPIES OF THIS PLAN SHEET.

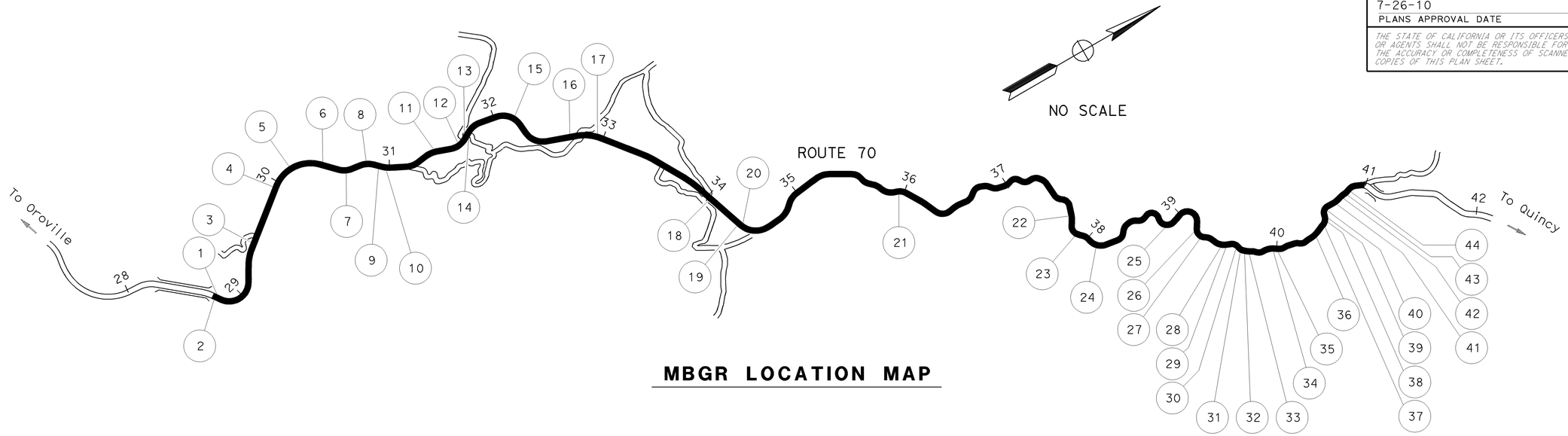

MBGR LOCATION MAP

MBGR LOCATION

LOCATION	PM	SIDE
1	28.82	Lt
2	28.82	Rt
3	29.34	Lt
4	29.95	Lt
5	30.09	Lt
6	30.39	Lt
7	30.56	Rt
8	30.78	Lt
9	30.93	Rt
10	30.98	Rt
11	31.37	Lt
12	31.64	Lt
13	31.68	Lt
14	31.72	Rt
15	32.16	Lt
16	32.77	Lt
17	32.95	Lt
18	34.02	Rt
19	34.35	Rt
20	34.38	Lt
21	35.97	Rt
22	37.71	Rt

MBGR LOCATION

LOCATION	PM	SIDE
23	37.88	Rt
24	38.09	Rt
25	38.83	Rt
26	39.23	Rt
27	39.35	Rt
28	39.52	Rt
29	39.58	Rt
30	39.65	Rt
31	39.68	Rt
32	39.73	Rt
33	39.76	Rt
34	39.96	Rt
35	40.00	Rt
36	40.25	Rt
37	40.46	Rt
38	40.49	Rt
39	40.53	Rt
40	40.55	Rt
41	40.69	Rt
42	40.77	Rt
43	40.80	Rt
44	40.88	Rt

CONSTRUCTION DETAILS

NO SCALE

C-4

REVISED BY | DATE REVISED
THOMAS N. LANGLEY | SUKHDEEP S. SANDHER
CALCULATED-DESIGNED BY | CHECKED BY
FUNCTIONAL SUPERVISOR | GARY S. BIRCH
STATE OF CALIFORNIA - DEPARTMENT OF TRANSPORTATION
Caltrans
DESIGN

LAST REVISION 07-09-10 | DATE PLOTTED => 10-AUG-2010 | TIME PLOTTED => 07:55

Dist	COUNTY	ROUTE	POST MILES TOTAL PROJECT	SHEET No.	TOTAL SHEETS
03	But	70	28.8/41.0	10	37

REGISTERED CIVIL ENGINEER 7-26-10 DATE

7-26-10
PLANS APPROVAL DATE

REGISTERED PROFESSIONAL ENGINEER Thomas N. Langley No. 64882 Exp. 06-30-11 CIVIL STATE OF CALIFORNIA

THE STATE OF CALIFORNIA OR ITS OFFICERS OR AGENTS SHALL NOT BE RESPONSIBLE FOR THE ACCURACY OR COMPLETENESS OF SCANNED COPIES OF THIS PLAN SHEET.

NOTES:

1. EXACT LOCATIONS OF NESTED RAIL TO BE DETERMINED BY ENGINEER.
2. FOR DETAILS NOT SHOWN, SEE STANDARD PLANS A77A2 AND A77C2.

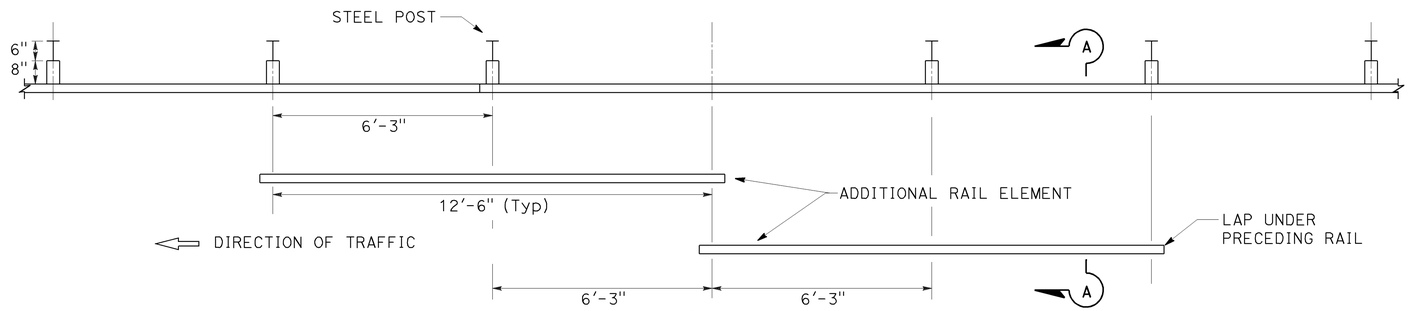

PLAN

CASE 1 - ONE POST OMITTED (SPLICE IN CENTER)

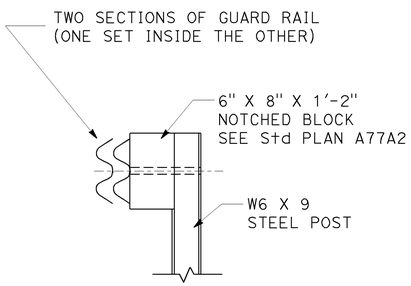

SECTION A-A

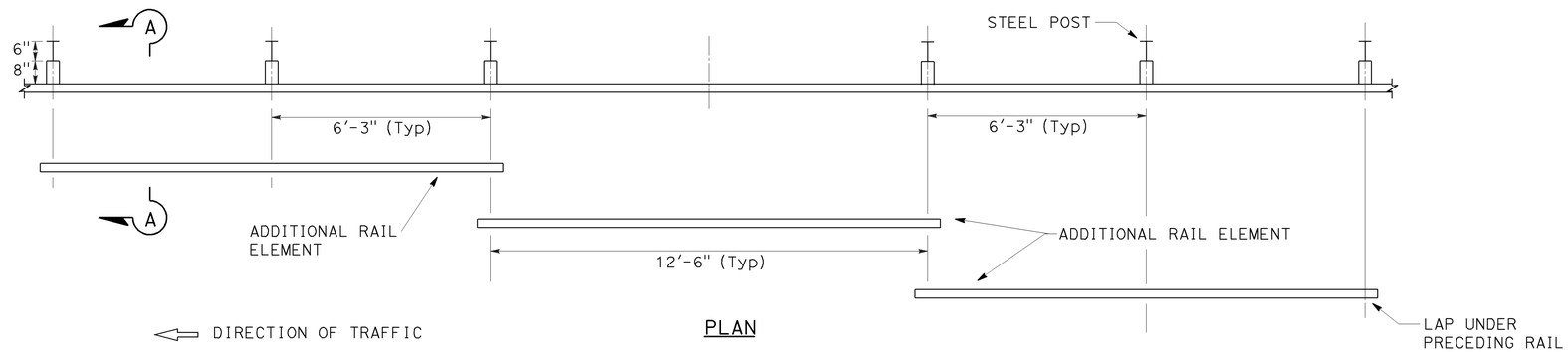

PLAN

CASE 2 - ONE POST OMITTED (SPLICE AT POSTS)

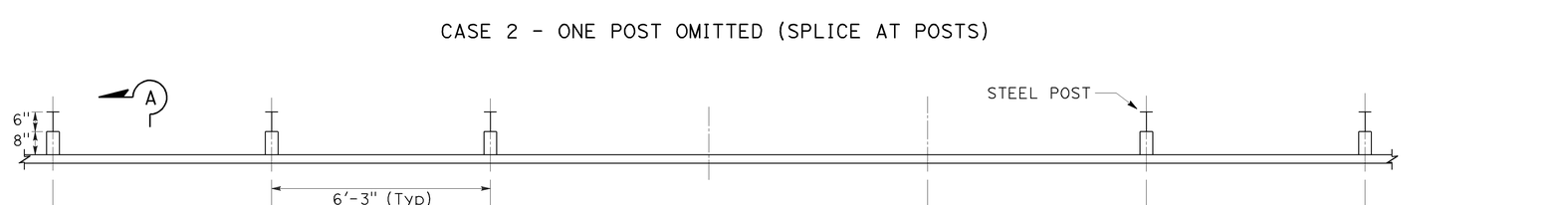

PLAN

CASE 3 - TWO POSTS OMITTED

NESTED METAL BEAM GUARDRAIL DETAILS

CONSTRUCTION DETAILS

NO SCALE

C-5

STATE OF CALIFORNIA - DEPARTMENT OF TRANSPORTATION
Caltrans®
DESIGN

FUNCTIONAL SUPERVISOR: GARY S. BIRCH
CALCULATED-DESIGNED BY: SANTIAGO CRUZ-ROVEDA
CHECKED BY: THOMAS N. LANGLEY
REVISED BY
DATE REVISED

LAST REVISION 07-09-10
DATE PLOTTED => 10-AUG-2010
TIME PLOTTED => 07:55

Dist	COUNTY	ROUTE	POST MILES TOTAL PROJECT	SHEET No.	TOTAL SHEETS
03	But	70	28.8/41.0	11	37

REGISTERED CIVIL ENGINEER 7-26-10 DATE

7-26-10
PLANS APPROVAL DATE

REGISTERED PROFESSIONAL ENGINEER Thomas N. Langley No. 64882 Exp. 06-30-11 CIVIL STATE OF CALIFORNIA

THE STATE OF CALIFORNIA OR ITS OFFICERS OR AGENTS SHALL NOT BE RESPONSIBLE FOR THE ACCURACY OR COMPLETENESS OF SCANNED COPIES OF THIS PLAN SHEET.

NOTES:

1. FOR DETAILS NOT SHOWN, SEE STANDARD PLANS MAY 2006.
2. ANY NECESSARY DIMENSIONS WILL BE FIELD VERIFIED TO CONFORM WITH EXISTING CONDITIONS.
3. ALL PLATES AND BOLTS ARE GALVANIZED.
4. TAPER THE TOP OF THE END OF THE BRIDGE RAILING AT 4:1 TO MATCH THE TOP ELEVATION OF THE THRIE BEAM RAIL ELEMENT.
5. BRIDGE RAIL ANCHOR BLOCKS SHALL BE SHIELDED FROM TRAFFIC UNTIL FINAL MBGR CONNECTION OCCURS.

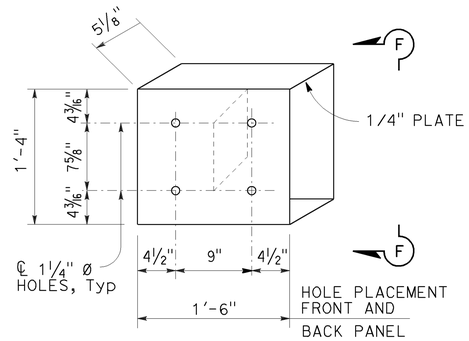

DETAIL E

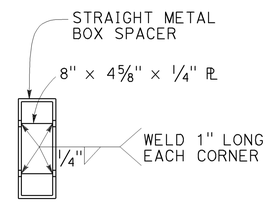

VIEW F-F

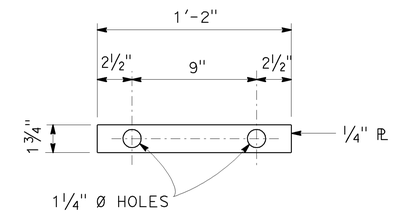

DETAIL G

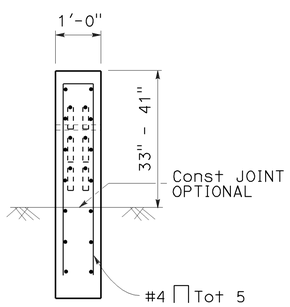

SECTION A-A

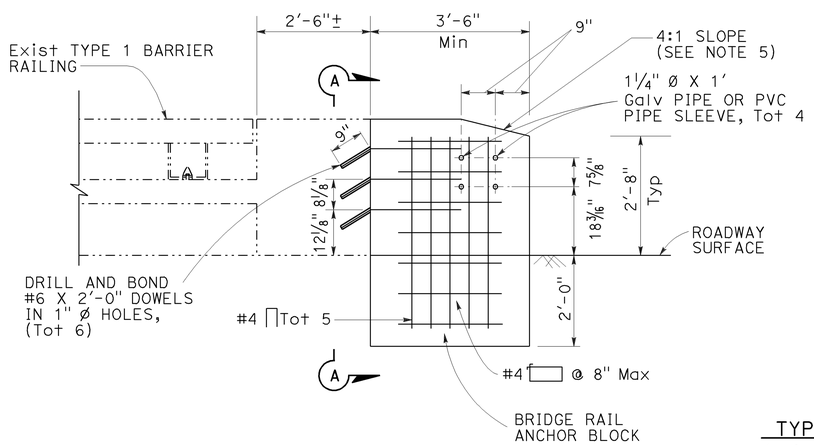

ELEVATION

TYPICAL SECTION
(Exist TYPE 1 BARRIER)

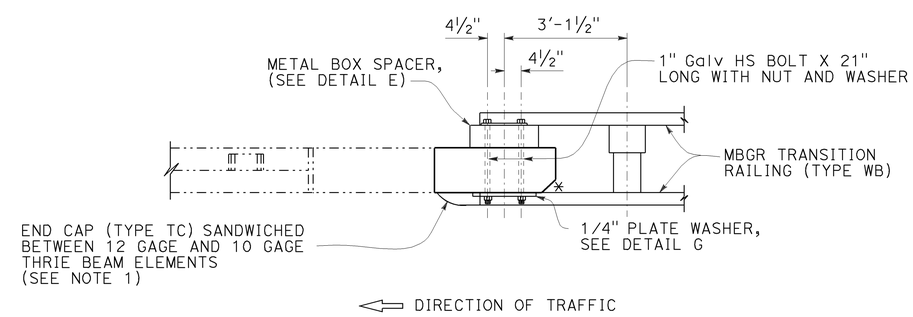

PLAN

ANCHOR BLOCK: MINOR CONCRETE (MINOR STRUCTURE)

END BLOCK: THRIE BEAM CONNECTION DETAILS
FOR EXISTING BARRIER RAILING TYPE 1

CONSTRUCTION DETAILS

NO SCALE

C-6

STATE OF CALIFORNIA - DEPARTMENT OF TRANSPORTATION
Caltrans DESIGN
FUNCTIONAL SUPERVISOR: GARY S. BIRCH
CALCULATED-DESIGNED BY: SUKHDEEP S. SANDHER
CHECKED BY: THOMAS N. LANGLEY
REVISED BY
DATE REVISED

LAST REVISION 07-09-10
DATE PLOTTED => 10-AUG-2010
TIME PLOTTED => 07:56

Dist	COUNTY	ROUTE	POST MILES TOTAL PROJECT	SHEET No.	TOTAL SHEETS
03	But	70	28.8/41.0	12	37

REGISTERED CIVIL ENGINEER 7-26-10 DATE

7-26-10
PLANS APPROVAL DATE

REGISTERED PROFESSIONAL ENGINEER Thomas N. Langley No. 64882 Exp. 06-30-11 CIVIL STATE OF CALIFORNIA

THE STATE OF CALIFORNIA OR ITS OFFICERS OR AGENTS SHALL NOT BE RESPONSIBLE FOR THE ACCURACY OR COMPLETENESS OF SCANNED COPIES OF THIS PLAN SHEET.

NOTES:

1. SEE SHEET Q-2 FOR APPLICABLE LOCATIONS.
2. ENGINEER MAY MODIFY TO MATCH EXISTING CONDITIONS.

LEGEND:

DIRECTION OF TRAVEL

PLACE HOT MIX ASPHALT (Misc AREA)

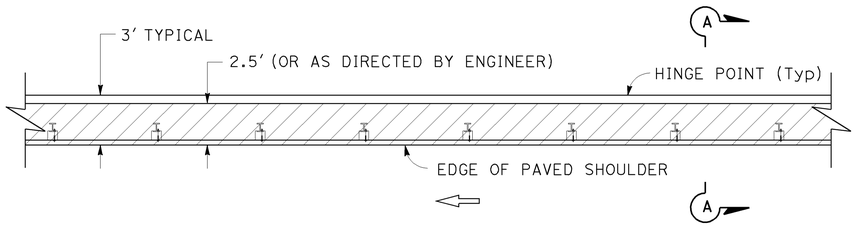

PLAN

STANDARD RAILING SECTION

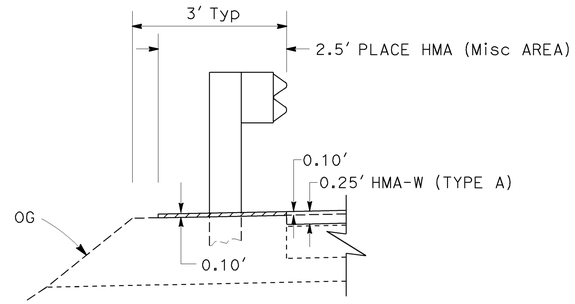

SECTION A-A

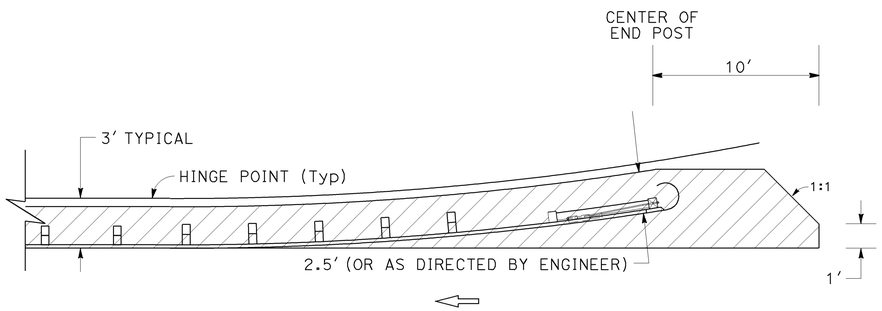

PLAN

TYPICAL TERMINAL SYSTEM
(FLARED SYSTEM SHOWN)

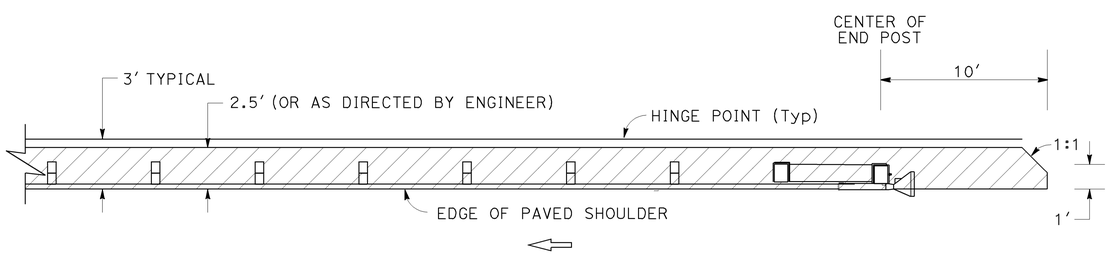

PLAN

TYPICAL TERMINAL SYSTEM
(IN-LINE SYSTEM SHOWN)

PLACE HOT MIX ASPHALT (Misc AREA)

MBGR LOCATIONS

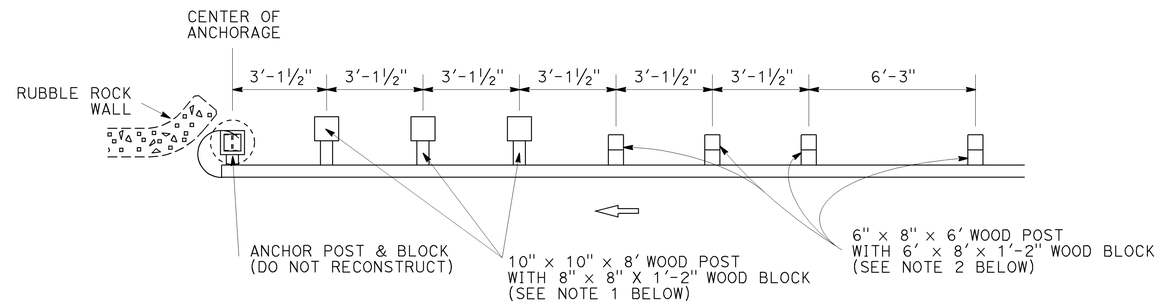

RECONSTRUCT MBGR

STRENGTHENED RAILING SECTION
FOR RUBBLE ROCK WALL RAILING TRANSITION (BAGR)
MBGR LOCATIONS: 27, 28, 29, 30, 31, 35, 37, 40, 42

NOTES:
1. W6 x 15 STEEL POST, 8'-0" IN LENGTH, WITH 8" x 8" x 1"-2" NOTCHED RECYCLED PLASTIC BLOCK MAY BE USED IN PLACE OF THE 10" x 10" x 8' WOOD POST WITH 8" x 8" x 1'-2" WOOD BLOCK.
2. W6 x 9 STEEL POST, 6'-0" IN LENGTH, WITH 6" x 8" x 1"-2" NOTCHED RECYCLED PLASTIC BLOCK MAY BE USED IN PLACE OF THE 6" x 8" x 6' WOOD POST WITH 6" x 8" x 1'-2" WOOD BLOCK.

CONSTRUCTION DETAILS

NO SCALE

C-7

STATE OF CALIFORNIA - DEPARTMENT OF TRANSPORTATION
DESIGN
FUNCTIONAL SUPERVISOR GARY S. BIRCH
CALCULATED-DESIGNED BY THOMAS N. LANGLEY
CHECKED BY GARY DUGHI
REVISED BY
DATE REVISED

LAST REVISION 07-09-10 | DATE PLOTTED => 10-AUG-2010 | TIME PLOTTED => 07:56

Dist	COUNTY	ROUTE	POST MILES TOTAL PROJECT	SHEET No.	TOTAL SHEETS
03	But	70	28.8/41.0	13	37

Thomas N Langley 7-26-10
REGISTERED CIVIL ENGINEER DATE

7-26-10
PLANS APPROVAL DATE

REGISTERED PROFESSIONAL ENGINEER
Thomas N. Langley
No. 64882
Exp. 06-30-11
CIVIL
STATE OF CALIFORNIA

THE STATE OF CALIFORNIA OR ITS OFFICERS OR AGENTS SHALL NOT BE RESPONSIBLE FOR THE ACCURACY OR COMPLETENESS OF SCANNED COPIES OF THIS PLAN SHEET.

NOTES:

1. FOR MBGR QUANTITY SEE SHEETS Q-2 AND Q-3.
2. EXISTING UTILITY FACILITIES HAVE NOT BEEN PLOTTED ON THESE PLANS.

LEGEND:

- DIRECTION OF TRAVEL
- DELINEATOR (CLASS 2) TYPE E OBJECT MARKER (TYPE L-1)
- 1 TERMINAL ANCHOR ASSEMBLY (TYPE SFT)
- 2 ALTERNATIVE IN-LINE TERMINAL SYSTEM
- 3 ALTERNATIVE FLARED TERMINAL SYSTEM
- 4 BURIED POST ANCHOR
- 5 TRANSITION RAILING (TYPE WB)
- A REMOVE MBGR
- B MBGR (STEEL POST)
- C RECONSTRUCT MBGR
- D MINOR CONCRETE (MINOR STRUCTURE)
- a REMOVE AC DIKE
- b PLACE AC DIKE (TYPE C)
- c PLACE AC DIKE (TYPE F)
- # LOCATION

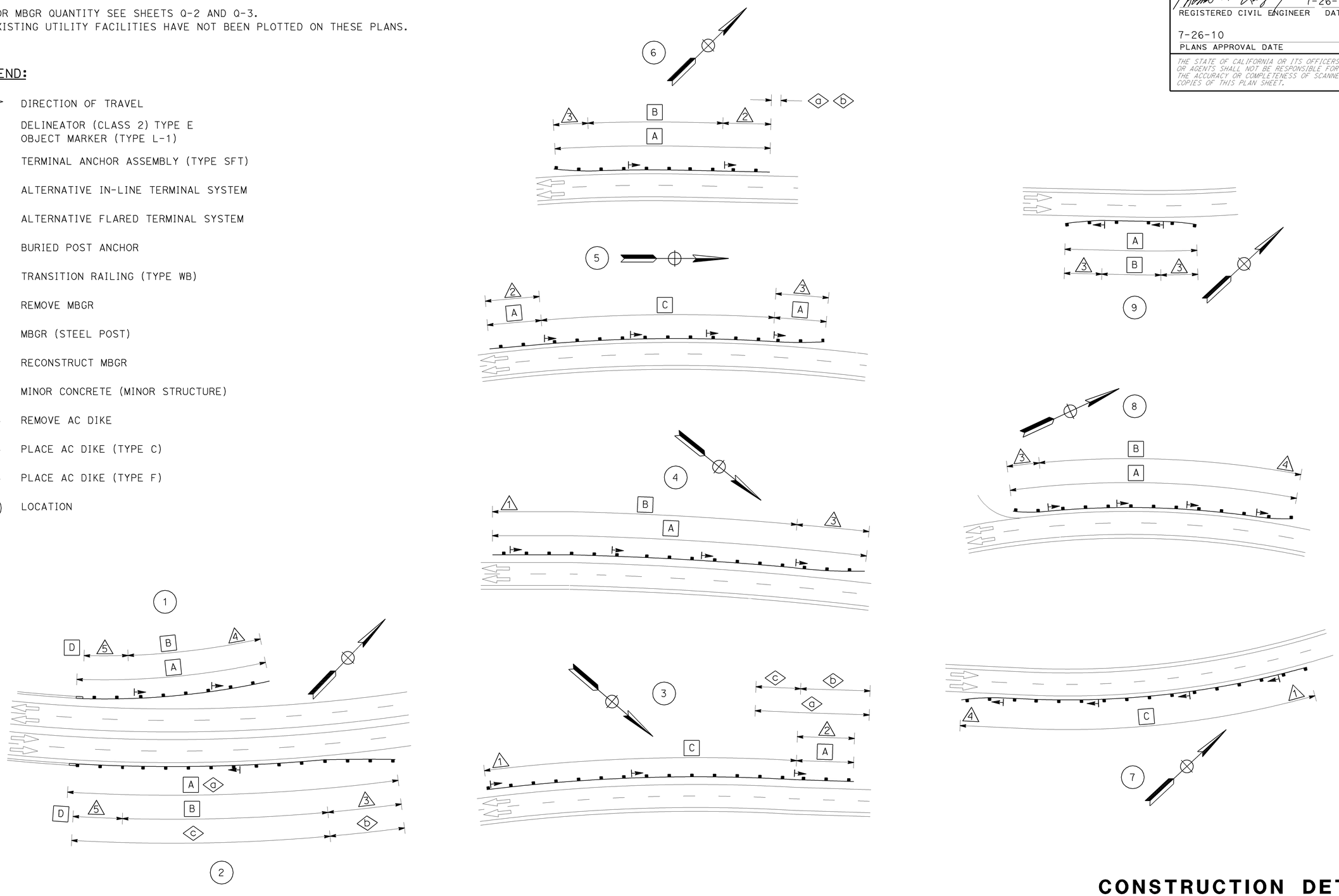

CONSTRUCTION DETAILS

NO SCALE

C-8

STATE OF CALIFORNIA - DEPARTMENT OF TRANSPORTATION
Caltrans
DESIGN

FUNCTIONAL SUPERVISOR: GARY S. BIRCH
CALCULATED-DESIGNED BY: THOMAS N. LANGLEY
CHECKED BY: GARY DUGHI
REVISED BY / DATE REVISED

LAST REVISION 07-19-10 | DATE PLOTTED => 10-AUG-2010 | TIME PLOTTED => 07:56

Dist	COUNTY	ROUTE	POST MILES TOTAL PROJECT	SHEET No.	TOTAL SHEETS
03	But	70	28.8/41.0	14	37

Thomas N Langley 7-26-10
REGISTERED CIVIL ENGINEER DATE

7-26-10
PLANS APPROVAL DATE

REGISTERED PROFESSIONAL ENGINEER
Thomas N. Langley
No. 64882
Exp. 06-30-11
CIVIL
STATE OF CALIFORNIA

THE STATE OF CALIFORNIA OR ITS OFFICERS OR AGENTS SHALL NOT BE RESPONSIBLE FOR THE ACCURACY OR COMPLETENESS OF SCANNED COPIES OF THIS PLAN SHEET.

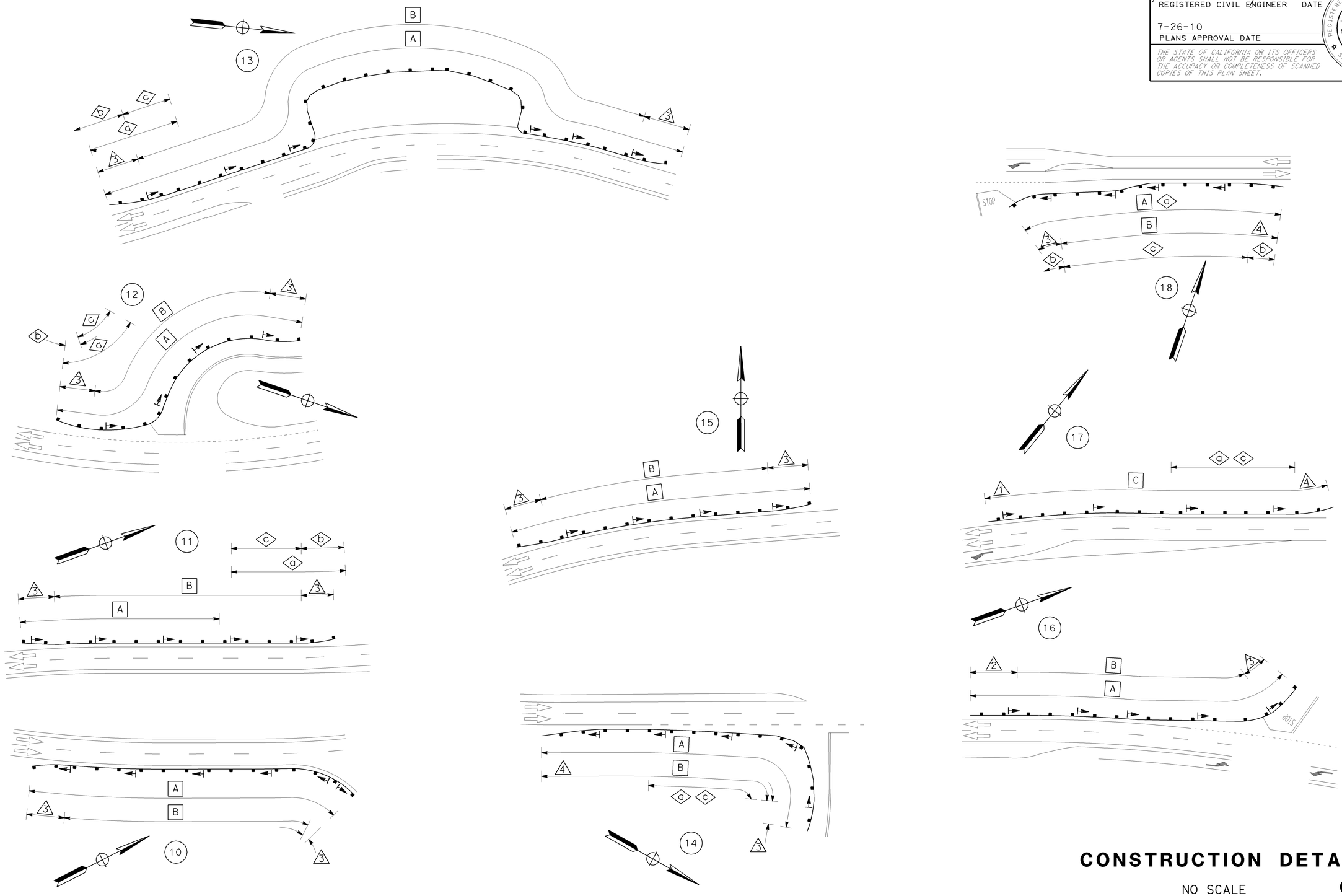

CONSTRUCTION DETAILS

NO SCALE

C-9

STATE OF CALIFORNIA - DEPARTMENT OF TRANSPORTATION
Caltrans®
DESIGN

FUNCTIONAL SUPERVISOR: GARY S. BIRCH
CALCULATED-DESIGNED BY: THOMAS N. LANGLEY
CHECKED BY: GARY DUGHI
REVISED BY
DATE REVISED

LAST REVISION 07-09-10
DATE PLOTTED => 10-AUG-2010
TIME PLOTTED => 07:56

Dist	COUNTY	ROUTE	POST MILES TOTAL PROJECT	SHEET No.	TOTAL SHEETS
03	But	70	28.8/41.0	15	37

Thomas N Langley 7-26-10
REGISTERED CIVIL ENGINEER DATE

7-26-10
PLANS APPROVAL DATE

REGISTERED PROFESSIONAL ENGINEER
Thomas N. Langley
No. 64882
Exp. 06-30-11
CIVIL
STATE OF CALIFORNIA

THE STATE OF CALIFORNIA OR ITS OFFICERS OR AGENTS SHALL NOT BE RESPONSIBLE FOR THE ACCURACY OR COMPLETENESS OF SCANNED COPIES OF THIS PLAN SHEET.

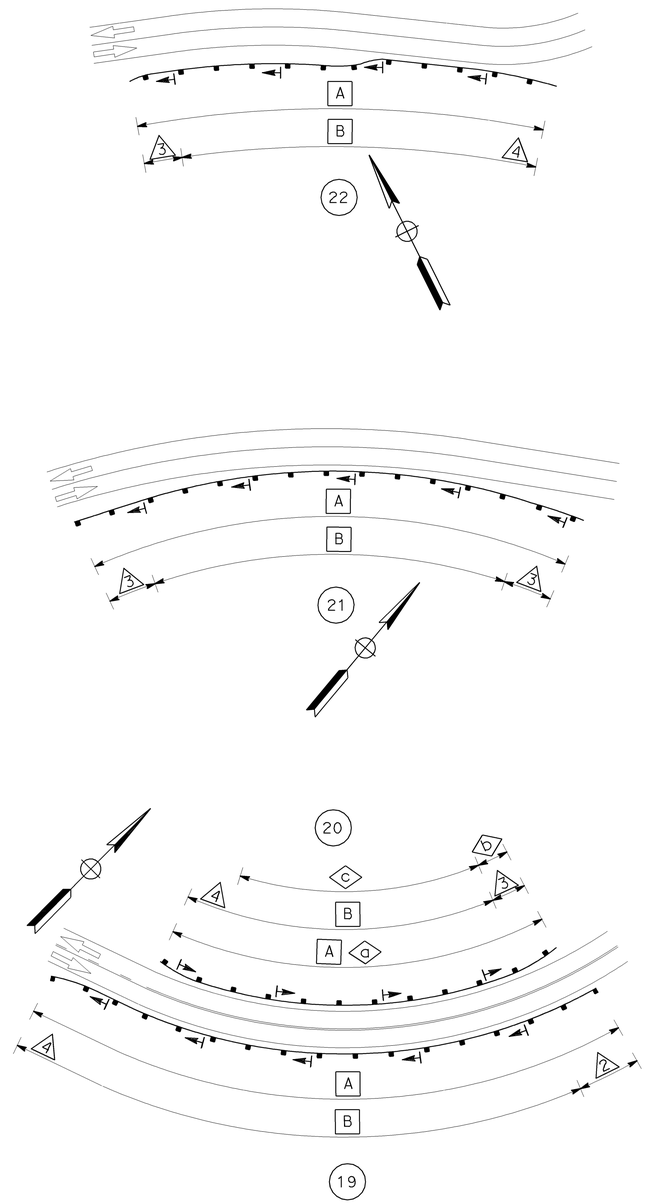

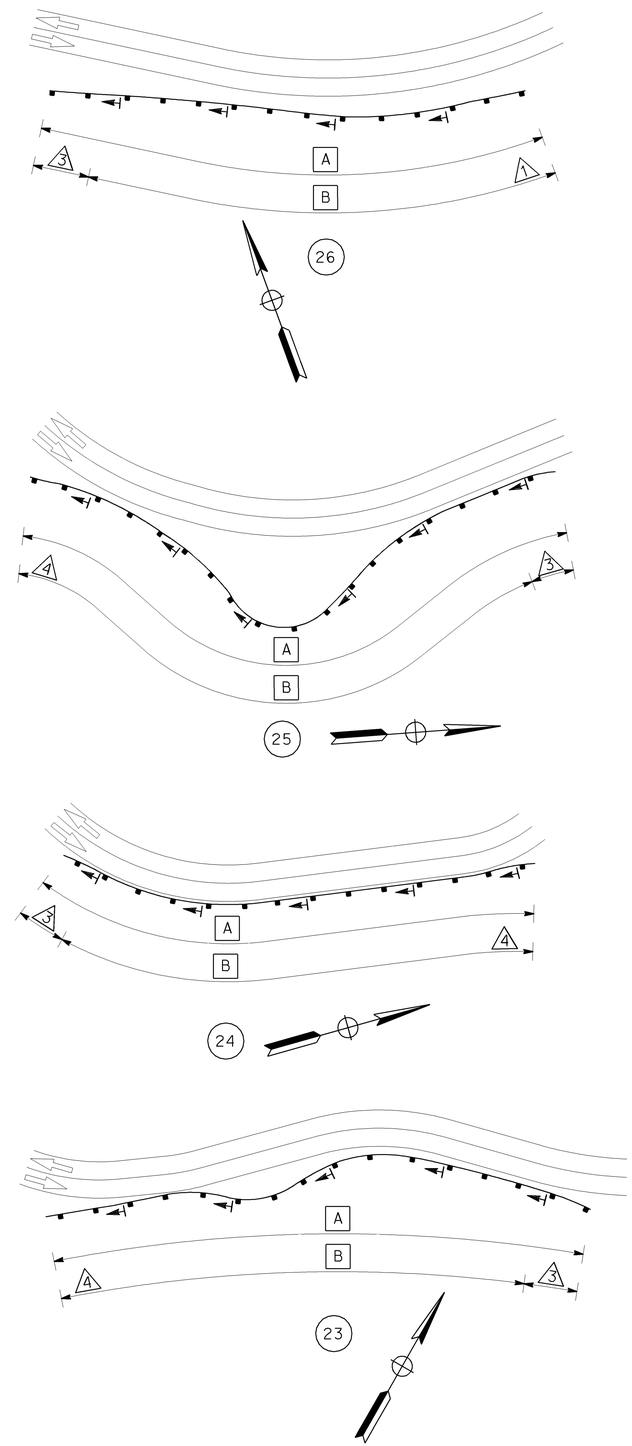

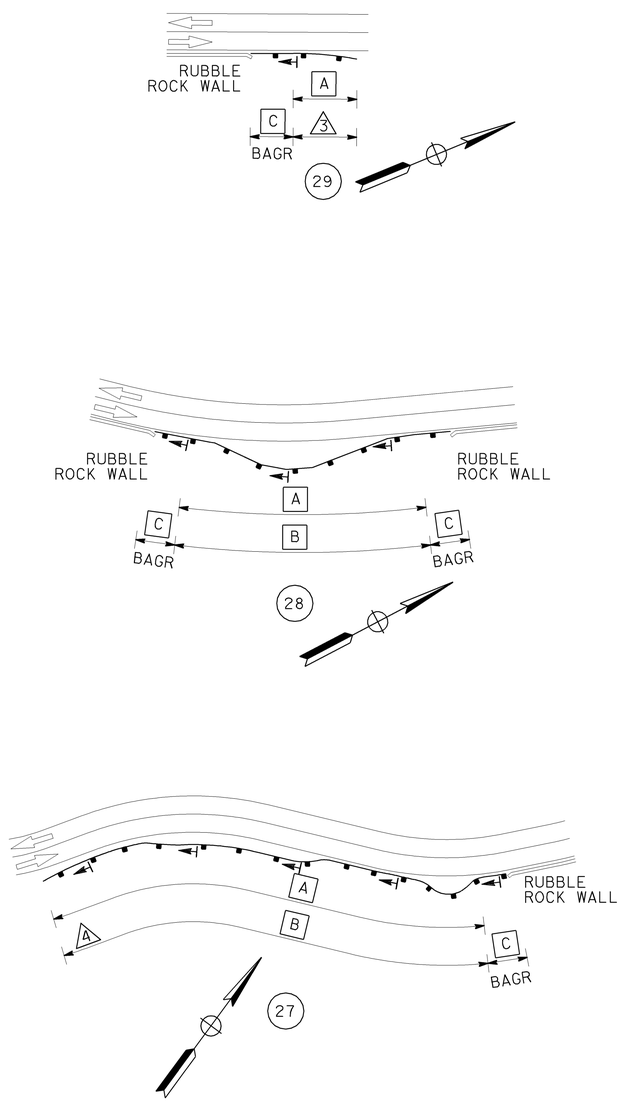

CONSTRUCTION DETAILS

NO SCALE

C-10

STATE OF CALIFORNIA - DEPARTMENT OF TRANSPORTATION
Caltrans®
DESIGN

FUNCTIONAL SUPERVISOR: GARY S. BIRCH

THOMAS N. LANGLEY
GARY DUGHI

CALCULATED-DESIGNED BY
CHECKED BY

REVISED BY
DATE REVISED

LAST REVISION 07-09-10
DATE PLOTTED => 10-AUG-2010
TIME PLOTTED => 07:56

Dist	COUNTY	ROUTE	POST MILES TOTAL PROJECT	SHEET No.	TOTAL SHEETS
03	But	70	28.8/41.0	16	37

Thomas N Langley 7-26-10
REGISTERED CIVIL ENGINEER DATE

7-26-10
PLANS APPROVAL DATE

REGISTERED PROFESSIONAL ENGINEER
Thomas N. Langley
No. 64882
Exp. 06-30-11
CIVIL
STATE OF CALIFORNIA

THE STATE OF CALIFORNIA OR ITS OFFICERS OR AGENTS SHALL NOT BE RESPONSIBLE FOR THE ACCURACY OR COMPLETENESS OF SCANNED COPIES OF THIS PLAN SHEET.

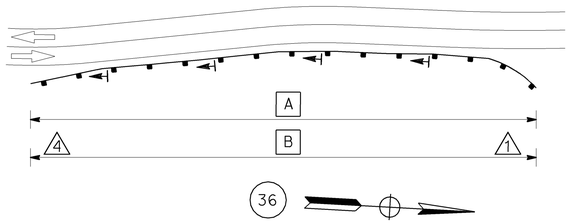

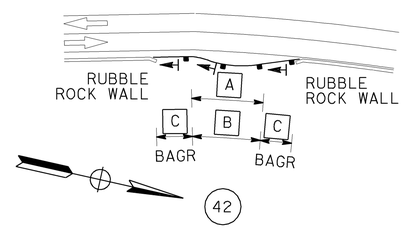

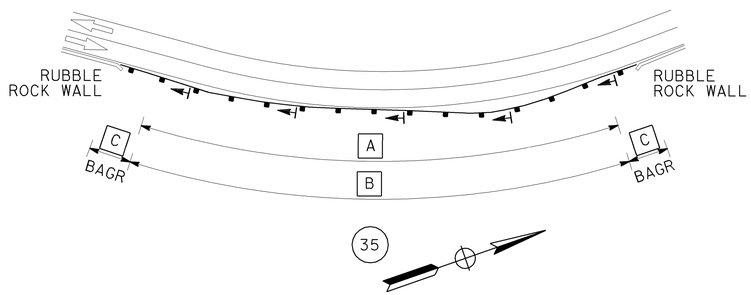

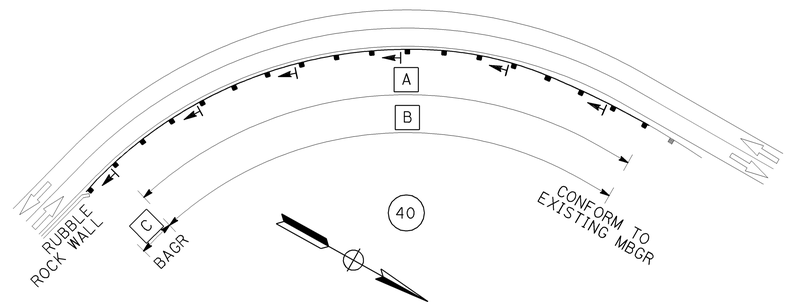

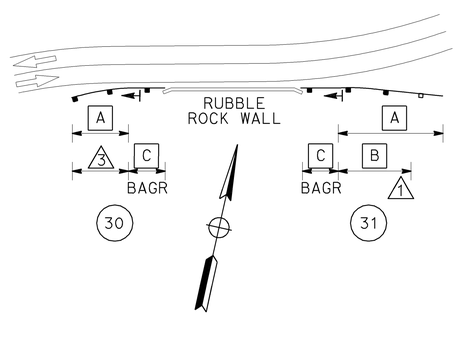

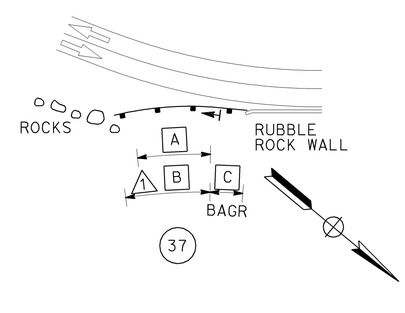

CONSTRUCTION DETAILS

NO SCALE

C-11

STATE OF CALIFORNIA - DEPARTMENT OF TRANSPORTATION
Caltrans
DESIGN

FUNCTIONAL SUPERVISOR: GARY S. BIRCH

CALCULATED-DESIGNED BY: THOMAS N. LANGLEY
CHECKED BY: GARY DUGHI

REVISED BY
DATE REVISED

LAST REVISION 07-09-10
DATE PLOTTED => 10-AUG-2010
TIME PLOTTED => 07:56

Dist	COUNTY	ROUTE	POST MILES TOTAL PROJECT	SHEET No.	TOTAL SHEETS
03	But	70	28.8/41.0	17	37

Thomas N Langley 7-26-10
REGISTERED CIVIL ENGINEER DATE

7-26-10
PLANS APPROVAL DATE

REGISTERED PROFESSIONAL ENGINEER Thomas N. Langley No. 64882 Exp. 06-30-11 CIVIL STATE OF CALIFORNIA

THE STATE OF CALIFORNIA OR ITS OFFICERS OR AGENTS SHALL NOT BE RESPONSIBLE FOR THE ACCURACY OR COMPLETENESS OF SCANNED COPIES OF THIS PLAN SHEET.

STATIONARY MOUNTED CONSTRUCTION AREA SIGNS

SIGN LETTER	SIGN CODE		PANEL SIZE	SIGN MESSAGE	NUMBER OF POSTS AND SIZE	NUMBER OF SIGNS
	FEDERAL	CALIFORNIA				
A	G20-1[Spec](14)		60'' X 30''	ROAD WORK NEXT 14 MILES	2 - 4'' X 6''	2
B	G20-2	C14 (CA)	36'' X 18''	END ROAD WORK	1 - 4'' X 4''	2
C		C40 (Mod) (CA)	72'' X 42''	TRAFFIC FINES DOUBLED IN WORK ZONES	2 - 4'' X 6''	2
D	W20-1	C23 (CA)	30'' X 30''	ROAD WORK AHEAD	1 - 4'' X 4''	11
E	G20-2	C14 (CA)	36'' X 18''	END ROAD WORK	1 - 4'' X 4''	11

NOTE: EXACT SIGN LOCATIONS TO BE DETERMINED BY THE ENGINEER.

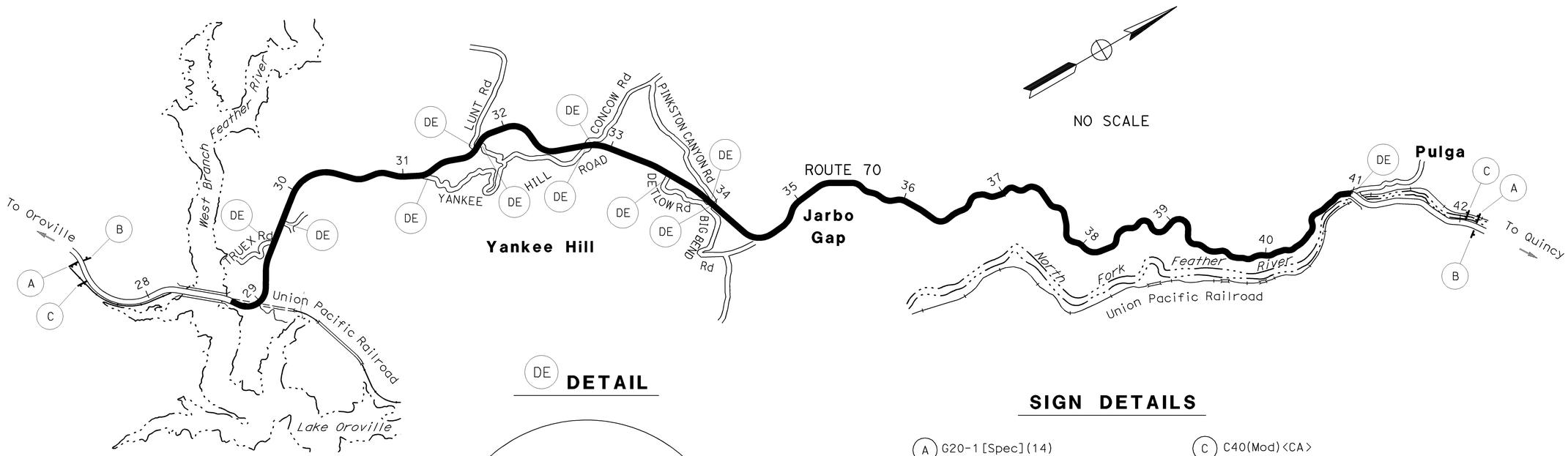

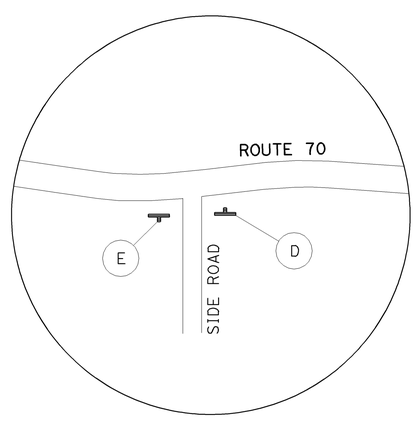

SIGN DETAILS

(A) G20-1[Spec](14)

ROAD WORK NEXT 14 MILES — 6" C SERIES LETTERS

60"x30"

RETROREFLECTIVE ORANGE BACKGROUND WITH BLACK LEGEND AND BORDER.

(C) C40(Mod)<CA>

TRAFFIC FINES DOUBLED IN WORK ZONES — 6" D SERIES LETTERS

72"x42"

RETROREFLECTIVE WHITE BACKGROUND WITH BLACK LEGEND AND BORDER.

CONSTRUCTION AREA SIGNS

NO SCALE

CS-1

STATE OF CALIFORNIA - DEPARTMENT OF TRANSPORTATION
DESIGN
FUNCTIONAL SUPERVISOR: GARY S. BIRCH
CALCULATED-DESIGNED BY: GARY DUGHI
CHECKED BY: THOMAS N. LANGLEY
REVISED BY
DATE REVISED

LAST REVISION 07-19-10 | DATE PLOTTED => 10-AUG-2010 | TIME PLOTTED => 07:56

Dist	COUNTY	ROUTE	POST MILES TOTAL PROJECT	SHEET No.	TOTAL SHEETS
03	But	70	28.8/41.0	18	37

REGISTERED CIVIL ENGINEER 7-26-10 DATE

7-26-10
PLANS APPROVAL DATE

REGISTERED PROFESSIONAL ENGINEER Thomas N. Langley No. 64882 Exp. 06-30-11 CIVIL STATE OF CALIFORNIA

THE STATE OF CALIFORNIA OR ITS OFFICERS OR AGENTS SHALL NOT BE RESPONSIBLE FOR THE ACCURACY OR COMPLETENESS OF SCANNED COPIES OF THIS PLAN SHEET.

NOTES:
(N) - NOT A SEPARATE PAY ITEM, FOR INFORMATION ONLY.

ROADWAY

LOCATION	COLD PLANE AC PAVEMENT	HMA - W (TYPE A)	HMA (TYPE A)	TACK COAT	IMPORTED MATERIAL (SHOULDER BACKING)	PLACE HOT MIX ASPHALT (MISCELLANEOUS AREA)	REPLACE AC SURFACING
PM - DESCRIPTION	SQYD	TON				SQYD	CY
28.81 - 28.85							70
HMA DIKE			2				
28.85 - 29.34				2.93	28		60
MAINLINE	16,831	3,020					
HMA CONCRETE DIKE			25				
"V" DITCHES			254			3,530	
28.96 - Dwy Rt	543		39				
29.34 - 33.11				25.06	283		440
MAINLINE	134,192	24,079	773				
HMA DIKE			338				
29.49 - TRUEX ROAD Lt	660		47				
29.71 - Dwy Lt	138		10				
29.71 - RICH GULCH ROAD Rt	453		33				
30.77 - Dwy Lt	181		13				
31.19 - YANKEE HILL ROAD Rt	504		36				
31.66 - LUNT ROAD Lt	432		31				
31.74 - LUNT ROAD Rt	417		30				
32.83 - CONCOW ROAD Lt	650		47				
32.83 - YANKEE HILL ROAD Rt	659		47				
32.92 - Dwy Rt			11				
33.11 - 34.64				6.13	105		175
MAINLINE	32,930	5,909					
HMA DIKE			139				
TURNOUT	390	195					
33.21 - Dwy Lt	148		11				
33.21 - Dwy Rt	267		19				
33.57 - DETLOW ROAD Rt	562		40				
34.01 - PINKSTON CANYON ROAD Lt	806		58				
34.01 - BIG BEND ROAD Rt	315		23				
34.64 - 40.99				16.78	2,084		750
MAINLINE	91,478	16,415					
TURNOUTS AND ACCELERATION LANES	3,776	967					
35.37 - Dwy Rt	158		11				
36.03 - Dwy Lt	184		13				
40.99 - PULGA ROAD Lt	51		4				
SUBTOTAL	286,725	50,585	2,054	50.90	2,500	3,530	1,495
FROM SHEET Q-3 (MBGR)			285			3,790	
TOTAL	286,725	50,585	2,339	50.90	2,500	7,320	1,495

DIKE

LOCATION		REMOVE AC DIKE	PLACE HMA DIKE (TYPE C)	PLACE HMA DIKE (TYPE D)	PLACE HMA DIKE (TYPE E)	PLACE HMA DIKE (TYPE F)
PM	SIDE	LF				
28.82 - 28.85	Rt	163	38			125
28.86 - 28.93	Rt	380		380		
29.34 - 29.54	Rt	1,050			1,050	
29.41 - 29.44	Lt	162	75			87
29.49 - 29.69	Lt	1,070			1,070	
29.60 - 29.70	Rt	520			520	
29.71 - 29.78	Lt	370			370	
29.84 - 29.92	Lt	400			400	
29.84 - 30.03	Rt	1,010			1,010	
30.08 - 30.29	Rt	1,080			1,080	
30.37 - 30.49	Rt	645			645	
30.43 - 30.46	Lt	210	25		185	
30.72 - 30.84	Rt	600			600	
31.01 - 31.06	Lt	245			245	
31.15 - 31.16	Lt	70			70	
31.49 - 31.57	Lt	400	90			310
31.64 - 31.66	Lt	130	38			92
31.67 - 31.72	Lt	300	65			235
31.70 - 31.74	Rt	250				250
37.90 - 31.96	Rt	330			330	
32.17 - 32.28	Rt	550			550	
32.53 - 32.64	Lt	590			590	
32.57 - 32.64	Rt	400			400	
32.69 - 32.80	Rt	600			600	
32.70 - 32.74	Lt	250			250	
32.93 - 33.06	Rt	685			685	
33.00 - 33.05	Lt	260				260
33.07 - 33.10	Rt	160			160	
33.21 - 33.31	Lt	480			480	
33.22 - 33.35	Rt	720			720	
33.50 - 33.65	Lt	800			800	
33.57 - 33.65	Rt	420			420	
33.72 - 33.74	Rt	100			100	
33.93 - 34.00	Lt	350			350	
34.01 - 34.20	Lt	1,000			1,000	
34.01 - 34.21	Rt	1,015	100			915
34.40 - 34.55	Lt	738	38			700
	TOTAL	18,503	469	380	14,680	2,974

DIKE NOTE: SEE SHEET C-3 REGARDING PROTECT DIKE AND DOWNDRAIN DURING DIKE REMOVAL AND REPLACEMENT.

SUMMARY OF QUANTITIES

Q-1

STATE OF CALIFORNIA - DEPARTMENT OF TRANSPORTATION
DESIGN
FUNCTIONAL SUPERVISOR: GARY S. BIRCH
CALCULATED-DESIGNED BY: THOMAS N. LANGLEY
CHECKED BY: GARY DUGHI
REVISED BY
DATE REVISED

LAST REVISION 07-26-10 | DATE PLOTTED => 10-AUG-2010 | TIME PLOTTED => 07:56

Dist	COUNTY	ROUTE	POST MILES TOTAL PROJECT	SHEET No.	TOTAL SHEETS
03	But	70	28.8/41.0	19	37

Thomas N Langley 7-26-10
REGISTERED CIVIL ENGINEER DATE

7-26-10
PLANS APPROVAL DATE

REGISTERED PROFESSIONAL ENGINEER
Thomas N. Langley
No. 64882
Exp. 06-30-11
CIVIL
STATE OF CALIFORNIA

THE STATE OF CALIFORNIA OR ITS OFFICERS OR AGENTS SHALL NOT BE RESPONSIBLE FOR THE ACCURACY OR COMPLETENESS OF SCANNED COPIES OF THIS PLAN SHEET.

METAL BEAM GUARD RAILING

LOCATION			REMOVE METAL BEAM GUARD RAILING	METAL BEAM GUARD RAILING (STEEL POST)	RECONSTRUCT METAL BEAM GUARD RAILING	MINOR CONCRETE (MINOR STRUCTURE)	(N) REMOVE BURIED POST ANCHOR	TERMINAL ANCHOR ASSEMBLY (TYPE SFT)	ALTERNATIVE IN-LINE TERMINAL SYSTEM	ALTERNATIVE FLARED TERMINAL SYSTEM	(N) BURIED POST ANCHOR	TRANSITION RAILING (TYPE WB)	(N) REMOVE OBJECT MARKER	OBJECT MARKER (TYPE L-1)	(N) REMOVE DELINEATOR	DELINEATOR (CLASS 2) TYPE E	(N) DELINEATOR SPACING "S"	PLACE HOT MIX ASPHALT (Misc AREA)
Loc	PM	SIDE	LF			CY	EA										LF	SQYD
1	28.82	Lt	100.0	75.0		0.62	1				1	1	1	1		1		
2	28.82	Rt	162.5	100.0		0.66				1		1			1	1		53
3	29.34	Lt	50.0		587.5			1	1						4	4	125	180
4	29.95	Lt	412.5	375.0				1		1			1	1		3	125	122
5	30.09	Lt	87.5		975.0				1	1			1	1	6	8	125	306
6	30.39	Lt	225.0	137.5					1	1					2	2	125	73
7	30.56	Rt			437.5		1	1			1		1	1	5	5	75	111
8	30.78	Lt	287.5	250.0			1			1	1		1	1	1	3	75	87
9	30.93	Rt	137.5	62.5						2			1	1		1	75	53
10	30.98	Rt	1,250.0	1,175.0						2			2	2	9	11	125	355
11	31.37	Lt	675.0	950.0						2			1	1	6	6	100	216
12	31.64	Lt	325.0	250.0						2			2	2	5	8	25	74
13	31.68	Lt	1,775.0	1,700.0						2			4	1	8	10	125	501
14	31.72	Rt	375.0	337.5			1			1	1		2	2	4	6	50	112
15	32.16	Lt	812.5	737.5						2			1	1	7	6	125	241
16	32.77	Lt	362.5	275.0					1	1			1	1	2	4	75	111
17	32.95	Lt			637.5		1	1			1		1	1	3	3	200	167
18	34.02	Rt	1,012.5	975.0			1			1	1		2	2	5	7	125	278
19	34.35	Rt	1,187.5	1,137.5			1		1		1		1	1	12	15	75	322
20	34.38	Lt	887.5	850.0			1			1	1		1	1	3	11	75	240
21	35.97	Rt	312.5	237.5						2			1	1	2	5	50	
22	37.71	Rt	750.0	712.5			1			1	1		1	1	6	13	50	188
23	37.88	Rt	925.0	887.5			1			1	1			1	10	16	50	
24	38.09	Rt	1,250.0	1,212.5			1			1	1		1	1	15	23	50	
25	38.83	Rt	612.5	575.0			1			1	1			1	2	11	50	
26	39.23	Rt	312.5	275.0				1		1					1	5	50	
SHEET TOTAL			14,287.5	13,287.5	2,637.5	1.28	12	5	5	28	12	2	27	26	119	188		3,790

SUMMARY OF QUANTITIES
Q-2

STATE OF CALIFORNIA - DEPARTMENT OF TRANSPORTATION
Caltrans
DESIGN

FUNCTIONAL SUPERVISOR: GARY S. BIRCH
CALCULATED-DESIGNED BY: THOMAS N. LANGLEY
CHECKED BY: SUKHDEEP S. SANDHER
REVISED BY
DATE REVISED

LAST REVISION 07-19-10
DATE PLOTTED => 10-AUG-2010
TIME PLOTTED => 07:56

Dist	COUNTY	ROUTE	POST MILES TOTAL PROJECT	SHEET No.	TOTAL SHEETS
03	But	70	28.8/41.0	20	37

Thomas N Langley 7-26-10
REGISTERED CIVIL ENGINEER DATE

7-26-10
PLANS APPROVAL DATE

REGISTERED PROFESSIONAL ENGINEER Thomas N. Langley No. 64882 Exp. 06-30-11 CIVIL STATE OF CALIFORNIA

THE STATE OF CALIFORNIA OR ITS OFFICERS OR AGENTS SHALL NOT BE RESPONSIBLE FOR THE ACCURACY OR COMPLETENESS OF SCANNED COPIES OF THIS PLAN SHEET.

METAL BEAM GUARD RAILING

LOCATION			REMOVE METAL BEAM GUARD RAILING	METAL BEAM GUARD RAILING (STEEL POST)	RECONSTRUCT METAL BEAM GUARD RAILING	MINOR CONCRETE (MINOR STRUCTURE)	(N) REMOVE BURIED POST ANCHOR	TERMINAL ANCHOR ASSEMBLY (TYPE SFT)	ALTERNATIVE IN-LINE TERMINAL SYSTEM	ALTERNATIVE FLARED TERMINAL SYSTEM	(N) BURIED POST ANCHOR	TRANSITION RAILING (TYPE WB)	(N) REMOVE OBJECT MARKER	OBJECT MARKER (TYPE L-1)	(N) REMOVE DELINEATOR*	DELINEATOR (CLASS 2) TYPE E*	(N) DELINEATOR SPACING "S"	PLACE HOT MIX ASPHALT (Misc AREA)*
Loc	PM	SIDE	LF			CY	EA										LF	SQYD
27	39.35	R†	787.5	787.5	25.0						1		1	1	5	8	100	
28	39.52	R†	137.5	137.5	50.0								1	1		1		
29	39.58	R†	37.5		25.0					1						1		
30	39.65	R†	37.5		25.0					1			1	1				
31	39.68	R†	50.0	37.5	25.0			1								1		
32	39.73	R†														1		
33	39.76	R†														1		
34	39.96	R†											1	1				
35	40.00	R†	275.0	275.0	50.0								1	1	6	6	50	
36	40.25	R†	350.0	350.0			1	1			1		1	1	6	6	50	
37	40.46	R†	50.0	62.5	25.0			1					1	1				
38	40.49	R†														2	50	
39	40.53	R†											1	1		1		
40	40.55	R†	425.0	425.0	25.0									1		5	75	
41	40.69	R†											1	1		1		
42	40.77	R†	50.0	50.0	50.0								1	1		2	50	
43	40.80	R†												1	4	3	50	
44	40.88	R†														1		
SUBTOTAL			2,200.0	2,125.0	300.0		1	3		2	2		10	12	21	40		
FROM SHEET Q-2			14,287.5	13,287.5	2,637.5	1.28	12	5	5	28	12	2	27	26	119	188		3,790
TOTAL			16,487.5	15,412.5	2,937.5	1.28	13	8	5	30	14	2	37	38	140	228		3,790

* SEE SUMMARY OF QUANTITIES SHEETS Q-1 AND Q-4 FOR PROJECT TOTALS.

SUMMARY OF QUANTITIES
Q-3

STATE OF CALIFORNIA - DEPARTMENT OF TRANSPORTATION
Caltrans DESIGN

FUNCTIONAL SUPERVISOR: GARY S. BIRCH
CALCULATED-DESIGNED BY: THOMAS N. LANGLEY
CHECKED BY: SUKHDEEP S. SANDHER
REVISED BY
DATE REVISED

LAST REVISION 07-19-10 | DATE PLOTTED => 10-AUG-2010 | TIME PLOTTED => 07:56

Dist	COUNTY	ROUTE	POST MILES TOTAL PROJECT	SHEET No.	TOTAL SHEETS
03	But	70	28.8/41.0	21	37

Thomas N Langley 7-26-10
REGISTERED CIVIL ENGINEER DATE

7-26-10
PLANS APPROVAL DATE

REGISTERED PROFESSIONAL ENGINEER Thomas N. Langley No. 64882 Exp. 06-30-11 CIVIL STATE OF CALIFORNIA

THE STATE OF CALIFORNIA OR ITS OFFICERS OR AGENTS SHALL NOT BE RESPONSIBLE FOR THE ACCURACY OR COMPLETENESS OF SCANNED COPIES OF THIS PLAN SHEET.

PAVEMENT MARKER AND STRIPING

LOCATION	(N) DETAIL LENGTH DETAIL 12	DETAIL 19	DETAIL 21	DETAIL 22	DETAIL 27B	DETAIL 27C	DETAIL 29	DETAIL 38	4" THERMOPLASTIC TRAFFIC STRIPE	4" THERMOPLASTIC TRAFFIC STRIPE (BROKEN 36-12)	4" THERMOPLASTIC TRAFFIC STRIPE (BROKEN 12-3)	8" THERMOPLASTIC TRAFFIC STRIPE	PAVEMENT MARKER (RETROREFLECTIVE-RECESSED) TYPE D	TYPE G	TYPE H
PM	LF												EA		
28.81 - 33.11	42,410		250	320	43,550	1,850	22,380	620	134,210	42,410	1,850	620	1,896	912	
33.11 - 34.64		2,020	40	6,070	15,190	970		230	29,430	2,020	970	230	551	11	85
34.64 - 40.99				33,580	67,160				134,320				2,800		
SUBTOTAL	42,410	2,020	290	39,970	125,900	2,820	22,380	850	297,960	44,430	2,820	850	5,247	923	85
TOTAL	42,410	2,020	290	39,970	125,900	2,820	22,380	850	297,960	44,430	2,820	850	6,255		

PAVEMENT MARKING

LOCATION	(N) MARKING TYPE TYPE III ARROW (LT)	TYPE VI ARROW	"STOP"	LIMIT LINE	THERMOPLASTIC PAVEMENT MARKING
PM - DESCRIPTION	EA			LF	SQFT
29.49 - TRUEX ROAD L†			1	43	65
29.71 - RICH GULCH ROAD R†			1	52	74
31.19 - YANKEE HILL ROAD R†			1	55	77
31.66 - LUNT ROAD L†			1	43	65
31.74 - LUNT ROAD R†	1		1	40	104
31.80 - VISTA POINT	1				42
32.6 - EB LANE DROP		3			126
32.83 - YANKEE HILL ROAD R†	1		1	41	105
32.83 - CONCOW ROAD L†	1		1	39	103
32.92 - DRIVEWAY R†	1				42
33.57 - DETLOW ROAD R†			1	36	58
34.01 - BIG BEND ROAD R†	1		1	45	109
34.01 - PINKSTON CANYON Rd L†	1		1	45	109
TOTAL	7	3	10	439	1,079

DELINEATOR

LOCATION	(N) REMOVE DELINEATOR	DELINEATOR (CLASS 2) TYPE E	TYPE F
PM - DESCRIPTION	EA		
28.8 TO 41.0 - CURVES	25	270	
28.8 TO 41.0 - INTERSECTIONS	25	10	13
32.6 - EB LANE DROP		5	
SUBTOTAL	50	298	
TOTAL FROM SHEET Q-3 (MBGR)	140	228	
TOTAL	190	526	

NOTE: EXACT LOCATION OF DELINEATORS TO DETERMINED BY ENGINEER.

SUMMARY OF QUANTITIES
Q-4

REVISED BY | DATE REVISED
GARY DUGHI | THOMAS N. LANGLEY
CALCULATED-DESIGNED BY | CHECKED BY
FUNCTIONAL SUPERVISOR
GARY S. BIRCH
STATE OF CALIFORNIA - DEPARTMENT OF TRANSPORTATION
DESIGN

LAST REVISION 07-19-10 | DATE PLOTTED => 10-AUG-2010 TIME PLOTTED => 07:56

Dist	COUNTY	ROUTE	POST MILES TOTAL PROJECT	SHEET No.	TOTAL SHEETS
03	But	70	28.8/41.0	22	37

Thomas N Langley 7-26-10
REGISTERED CIVIL ENGINEER DATE

7-26-10
PLANS APPROVAL DATE

REGISTERED PROFESSIONAL ENGINEER
Thomas N. Langley
No. 64882
Exp. 06-30-11
CIVIL
STATE OF CALIFORNIA

THE STATE OF CALIFORNIA OR ITS OFFICERS OR AGENTS SHALL NOT BE RESPONSIBLE FOR THE ACCURACY OR COMPLETENESS OF SCANNED COPIES OF THIS PLAN SHEET.

NOTES:

1. THE ANNOTATIONS FOR MARKER (CULVERT) AND HIGHWAY POST MARKER SHALL BE VERIFIED BY THE ENGINEER PRIOR TO ORDERING.

MARKER (CULVERT)

LOCATION PM	LOCATION SIDE	(N) REMOVE MARKER EA	MARKER (CULVERT) EA	ANNOTATION	REMARKS
28.83	Lt	1	1	28.83	INLET
28.92	Lt/Rt	2	2	28.92	INLET/CULVERT
28.98	Rt	1	1	28.98	INLET
29.00	Lt		1	29.00	INLET
29.04	Lt/Rt	2	2	29.04	INLET
29.09	Lt/Rt	2	2	29.09	INLET
29.16	Lt/Rt	2	2	29.16	INLET
29.41	Lt/Rt	2	2	29.41	CULVERT
29.52	Lt/Rt	2	2	29.52	CULVERT
29.64	Lt/Rt	2	2	29.64	CULVERT
29.70	Lt/Rt	2	2	29.70	CULVERT
30.43	Lt	1	2	30.43	CULVERT
30.55	Lt	1	1	30.55	INLET
30.55	Rt	1	1	30.55	CULVERT
30.61	Lt/Rt	1	2	30.61	CULVERT
30.81	Lt/Rt	1	2	30.81	CULVERT
31.06	Lt/Rt	2	2	31.06	CULVERT
31.16	Lt/Rt	2	2	31.16	CULVERT
31.19	Lt/Rt		2	31.19	CULVERT
31.43	Lt/Rt	2	2	31.43	CULVERT
31.67	Lt/Rt	2	2	31.67	CULVERT
31.72	Lt/Rt	2	2	31.72	CULVERT
31.74	Lt/Rt	2	2	31.74	INLET/CULVERT
31.97	Lt/Rt	2	2	31.97	CULVERT
32.19	Lt/Rt	1	2	32.19	CULVERT
32.28	Lt/Rt	2	2	32.28	CULVERT
32.65	Lt/Rt	2	2	32.65	CULVERT
32.78	Lt/Rt	2	2	32.75	CULVERT
33.04	Lt/Rt	1	2	33.04	CULVERT
33.26	Lt/Rt	2	2	33.26	CULVERT
33.37	Lt/Rt		2	33.37	CULVERT
33.54	Lt/Rt	1	2	33.54	CULVERT
33.63	Lt/Rt	1	2	33.63	CULVERT
33.80	Lt/Rt	1	2	33.80	CULVERT
33.92	Lt/Rt	2	2	33.92	CULVERT
33.98	Lt/Rt	2	2	33.98	CULVERT
34.14	Lt/Rt	2	2	34.13	CULVERT
34.19	Lt/Rt	2	2	34.19	CULVERT
34.45	Lt/Rt	2	2	34.45	CULVERT
34.53	Lt/Rt	2	2	34.53	CULVERT
SUBTOTAL		62	75		

MARKER (CULVERT)

LOCATION PM	LOCATION SIDE	(N) REMOVE MARKER EA	MARKER (CULVERT) EA	ANNOTATION	REMARKS
34.72	Lt/Rt	2	2	34.72	CULVERT
34.78	Lt/Rt	2	2	34.78	CULVERT
35.28	Rt	1	1	35.28	CULVERT
35.31	Rt	1	1	35.31	CULVERT
35.44	Lt	1	1	35.44	CULVERT
35.55	Lt/Rt	2	2	35.55	CULVERT
35.64	Lt/Rt	2	2	35.64	CULVERT
35.73	Lt/Rt	2	2	35.73	CULVERT
35.94	Lt/Rt	2	2	35.94	CULVERT
36.08	Lt/Rt	2	2	36.08	CULVERT
36.19	Lt/Rt	2	2	36.19	CULVERT
36.25	Lt/Rt	2	2	36.25	CULVERT
36.33	Lt/Rt	2	2	36.33	CULVERT
36.43	Lt/Rt	2	2	36.43	CULVERT
36.48	Lt/Rt	2	2	36.48	CULVERT
36.52	Lt/Rt	2	2	36.52	CULVERT
36.62	Lt/Rt	2	2	36.62	CULVERT
36.66	Lt/Rt	2	2	36.66	CULVERT
36.70	Lt/Rt	2	2	36.70	CULVERT
36.78	Lt/Rt	2	2	36.78	CULVERT
36.86	Lt/Rt	2	2	36.86	CULVERT
36.94	Lt/Rt	2	2	36.94	CULVERT
37.04	Lt/Rt	2	2	37.04	CULVERT
37.16	Lt/Rt	2	2	37.16	CULVERT
37.24	Lt/Rt	2	2	37.24	CULVERT
37.32	Lt/Rt	2	2	37.32	CULVERT
37.40	Lt/Rt	2	2	37.40	CULVERT
37.48	Lt/Rt	2	2	37.48	CULVERT
37.57	Lt/Rt	2	2	37.57	CULVERT
37.61	Lt/Rt	2	2	37.61	CULVERT
37.68	Lt/Rt	2	2	37.68	CULVERT
37.74	Lt/Rt	2	2	37.74	CULVERT
37.80	Lt/Rt	2	2	37.80	CULVERT
37.88	Lt/Rt	2	2	37.88	CULVERT
37.95	Lt/Rt	2	2	37.95	CULVERT
38.06	Lt/Rt	2	2	38.06	CULVERT
38.18	Lt/Rt	2	2	38.18	CULVERT
38.27	Lt/Rt	2	2	38.27	CULVERT
38.37	Lt/Rt	2	2	38.37	CULVERT
38.40	Lt/Rt	2	2	38.40	CULVERT
SUBTOTAL		77	77		

MARKER (CULVERT)

LOCATION PM	LOCATION SIDE	(N) REMOVE MARKER EA	MARKER (CULVERT) EA	ANNOTATION	REMARKS
38.46	Lt/Rt	2	2	38.46	CULVERT
38.53	Lt/Rt	2	2	38.53	CULVERT
38.64	Lt/Rt	2	2	38.64	CULVERT
38.67	Lt/Rt	2	2	38.67	CULVERT
38.73	Lt/Rt	2	2	38.73	CULVERT
38.82	Lt/Rt	2	2	38.82	CULVERT
38.95	Lt/Rt	2	2	38.95	CULVERT
39.00	Lt/Rt	2	2	39.00	CULVERT
39.11	Lt/Rt	2	2	39.11	CULVERT
39.12	Lt/Rt	2	2	39.12	CULVERT
39.23	Lt/Rt	2	2	39.23	CULVERT
39.30	Lt/Rt	2	2	39.30	CULVERT
39.45	Lt/Rt	2	2	39.45	CULVERT
39.48	Lt/Rt	2	2	39.48	CULVERT
39.54	Lt/Rt	2	2	39.54	CULVERT
39.59	Lt/Rt	2	2	39.59	CULVERT
39.71	Lt/Rt	2	2	39.71	CULVERT
39.78	Lt/Rt	2	2	39.78	CULVERT
39.82	Lt/Rt	2	2	39.82	CULVERT
39.90	Lt/Rt	2	2	39.90	CULVERT
39.95	Lt/Rt	2	2	39.95	CULVERT
40.08	Lt/Rt	2	2	40.08	CULVERT
40.13	Lt/Rt	2	2	40.13	CULVERT
40.27	Lt/Rt	2	2	40.27	CULVERT
40.42	Lt/Rt	2	2	40.42	CULVERT
40.53	Lt/Rt	2	2	40.53	CULVERT
40.59	Lt/Rt	2	2	40.59	CULVERT
40.62	Lt/Rt	2	2	40.62	CULVERT
40.65	Lt/Rt	2	2	40.65	CULVERT
40.72	Lt/Rt	2	2	40.72	CULVERT
40.77	Lt/Rt	2	2	40.77	CULVERT
40.82	Lt/Rt	2	2	40.82	CULVERT
40.83	Lt/Rt	2	2	40.83	CULVERT
40.88	Lt/Rt	2	2	40.88	CULVERT
40.98	Lt/Rt	2	2	40.98	CULVERT
SUBTOTAL		70	70		
GRAND TOTAL		209	222		

HIGHWAY POST MARKER

LOCATION PM	LOCATION SIDE	(N) REMOVE MARKER EA	HIGHWAY POST MARKER EA	ANNOTATION
29.00	Lt/Rt	2	2	29.00
29.50	Rt		1	29.50
30.00	Lt/Rt	2	2	30.00
30.50	Lt/Rt		2	30.50
31.00	Lt/Rt	2	2	31.00
31.50	Lt/Rt		2	31.50
32.00	Lt/Rt	2	2	32.00
32.50	Lt/Rt		2	32.50
33.00	Lt/Rt	2	2	33.00
34.00	Lt/Rt	2	2	34.00
34.50	Lt/Rt		2	34.50
35.00	Lt/Rt	2	2	35.00
35.50	Lt/Rt	1	2	35.50
36.00	Rt	1	1	36.00
36.50	Rt		1	36.50
37.00	Rt	1	1	37.00
37.50	Rt		1	37.50
38.00	Rt	1	1	38.00
38.70	Rt		1	38.70
39.00	Rt	1	1	39.00
39.50	Rt		1	39.50
40.00	Rt	1	1	40.00
40.50	Rt		1	40.50
40.95	Rt		1	40.95
41.00	Rt	1		41.00
TOTAL		21	36	

SUMMARY OF QUANTITIES

Q-5

STATE OF CALIFORNIA - DEPARTMENT OF TRANSPORTATION
Caltrans®
DESIGN

FUNCTIONAL SUPERVISOR: GARY S. BIRCH
CALCULATED-DESIGNED BY: JOHANN M. REEVES
CHECKED BY: THOMAS N. LANGLEY
REVISED BY
DATE REVISED

LAST REVISION 07-09-10
DATE PLOTTED => 10-AUG-2010
TIME PLOTTED => 07:56

Dist	COUNTY	ROUTE	POST MILES TOTAL PROJECT	SHEET No.	TOTAL SHEETS
03	But	70	28.8/41.0	23	37

Thomas N Langley 7-26-10
REGISTERED CIVIL ENGINEER DATE

7-26-10
PLANS APPROVAL DATE

REGISTERED PROFESSIONAL ENGINEER Thomas N. Langley No. 64882 Exp. 06-30-11 CIVIL STATE OF CALIFORNIA

THE STATE OF CALIFORNIA OR ITS OFFICERS OR AGENTS SHALL NOT BE RESPONSIBLE FOR THE ACCURACY OR COMPLETENESS OF SCANNED COPIES OF THIS PLAN SHEET.

NOTES:
1. CALIFORNIA SIGN CODES ARE DESIGNATED BY (CA), OTHERWISE FEDERAL SIGN CODES ARE SHOWN.
2. ALL SIGN PANELS SHALL BE SINGLE FACED.

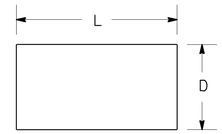

L = LENGTH OF SIGN
D = DEPTH OF SIGN

ROADSIDE SIGN PANEL QUANTITIES (CONTRACTOR-FURNISHED)

SIGN CODE	SIGN DESCRIPTION / MESSAGE	SIGN SIZE L x D	SIGN AREA	NUMBER OF SIGNS	BACKGROUND		LEGEND		PROTECTIVE OVERLAY	FURNISH SINGLE SHEET ALUMINUM SIGN	
					SHEETING COLOR	RETROREFLECTIVE ASTM TYPE	SHEETING COLOR	RETROREFLECTIVE ASTM TYPE	PREMIUM	UNFRAMED	
										0.063"	0.080"
		INCH	SQFT							SQFT	SQFT
R1-1	STOP	30	5.18	9	RED	IX	WHITE	IX	X	46.62	
R4-1	DO NOT PASS	36 x 48	12.00	1	WHITE	III	BLACK		X	12.00	
W1-2R	CURVE (RIGHT) (SYMBOL)	36 x 36	9.00	1	YELLOW	III	BLACK		X	9.00	
W1-2L	CURVE (LEFT) (SYMBOL)	36 x 36	9.00	3	YELLOW	III	BLACK		X	27.00	
W1-3L	REVERSE TURN (LEFT) (SYMBOL)	36 x 36	9.00	3	YELLOW	III	BLACK		X	27.00	
W1-4R	REVERSE CURVE (RIGHT) (SYMBOL)	36 x 36	9.00	1	YELLOW	III	BLACK		X	9.00	
W1-4L	REVERSE CURVE (LEFT) (SYMBOL)	36 x 36	9.00	2	YELLOW	III	BLACK		X	18.00	
W1-5R	WINDING ROAD (RIGHT) (SYMBOL)	36 x 36	9.00	5	YELLOW	III	BLACK		X	45.00	
W1-5L	WINDING ROAD (LEFT) (SYMBOL)	36 x 36	9.00	4	YELLOW	III	BLACK		X	36.00	
W1-7	TWO-DIRECTIONAL ARROW (SYMBOL)	48 x 24	8.00	4	YELLOW	IX	BLACK		X		32.00
W1-8L	CHEVRON ALIGNMENT (LEFT)	30 x 36	7.50	3	YELLOW	III	BLACK		X	22.50	
W2-2R	SIDE ROAD (RIGHT) (SYMBOL)	36 x 36	9.00	1	YELLOW	III	BLACK		X	9.00	
W2-2L	SIDE ROAD (LEFT) (SYMBOL)	36 x 36	9.00	1	YELLOW	III	BLACK		X	9.00	
W3-1	STOP AHEAD (SYMBOL)	36 x 36	9.00	8	YELLOW	IX	BLACK RED, WHITE	 IX	X	72.00	
W4-2R	RIGHT LANE ENDS (SYMBOL)	48 x 48	16.00	1	YELLOW	IX	BLACK		X		16.00
W8-5	SLIPPERY WHEN WET (SYMBOL)	36 x 36	9.00	2	YELLOW	III	BLACK		X	18.00	
W9-1R	RIGHT LANE ENDS	48 x 48	16.00	1	YELLOW	III	BLACK		X		16.00
W13-1 (30)	ADVISORY SPEED (30 MPH)	30 x 30	6.25	3	YELLOW	III	BLACK		X	18.75	
W13-1 (35)	ADVISORY SPEED (35 MPH)	30 x 30	6.25	6	YELLOW	III	BLACK		X	37.50	
W13-1 (40)	ADVISORY SPEED (40 MPH)	30 x 30	6.25	1	YELLOW	III	BLACK		X	6.25	
W13-1 (45)	ADVISORY SPEED (45 MPH)	30 x 30	6.25	1	YELLOW	III	BLACK		X	6.25	
N-1 (CA)	YELLOW OBJECT MARKER	18 x 18	2.25	4	YELLOW	III			X	9.00	
TOTAL										437.87	64.00

SUMMARY OF QUANTITIES
Q-6

STATE OF CALIFORNIA - DEPARTMENT OF TRANSPORTATION
DESIGN
FUNCTIONAL SUPERVISOR: GARY S. BIRCH
CALCULATED-DESIGNED BY: THOMAS N. LANGLEY
CHECKED BY: GARY DUGHI
REVISED BY
DATE REVISED

LAST REVISION 07-19-10
DATE PLOTTED => 10-AUG-2010
TIME PLOTTED => 07:56

Dist	COUNTY	ROUTE	POST MILES TOTAL PROJECT	SHEET No.	TOTAL SHEETS
03	But	70	28.8/41.0	24	37

Thomas N Langley 7-26-10
REGISTERED CIVIL ENGINEER DATE

7-26-10
PLANS APPROVAL DATE

REGISTERED PROFESSIONAL ENGINEER Thomas N. Langley No. 64882 Exp. 06-30-11 CIVIL STATE OF CALIFORNIA

THE STATE OF CALIFORNIA OR ITS OFFICERS OR AGENTS SHALL NOT BE RESPONSIBLE FOR THE ACCURACY OR COMPLETENESS OF SCANNED COPIES OF THIS PLAN SHEET.

ROADSIDE SIGN

LOCATION PM	LOCATION SIDE	(N) SIGN CODE	SIGN DESCRIPTION / MESSAGE	(N) PANEL SIZE	(N) POST SIZE	REMOVE ROADSIDE SIGN (EA)	ROADSIDE SIGN - ONE POST (EA)	RESET ROADSIDE SIGN (ONE POST) (EA)	RESET ROADSIDE SIGN (TWO POST) (EA)	REMARKS
28.85	R†	G9-2 (CA)	UNINCORPORATED COMMUNITY						1	YANKEE HILL
28.97	L†	W8-5	SLIPPERY WHEN WET (SYMBOL)	36" X 36"	4" X 6"	1	1			
29.49	L†	R1-1	STOP	30"	4" X 4"	1	1			TRUEX ROAD
29.49	L†	W3-1	STOP AHEAD (SYMBOL)	36" X 36"	4" X 6"	1	1			TRUEX ROAD
31.11	R†	W2-2R	SIDE ROAD (RIGHT) (SYMBOL)					1		YANKEE HILL ROAD
31.19	R†	R1-1	STOP	30"	4" X 4"	1	1			YANKEE HILL ROAD R†
31.19	L†	W1-7	TWO-DIRECTIONAL ARROW (SYMBOL)	48" X 24"	4" X 6"	1	1			YANKEE HILL ROAD R†
		N-1 (CA)	YELLOW OBJECT MARKER	18" X 18"						INSTALL BELOW W1-7
31.19	R†	W3-1	STOP AHEAD (SYMBOL)	36" X 36"	4" X 6"		1			YANKEE HILL ROAD R†
31.53	L†	G28(70) (CA)	STATE ROUTE SHIELD / DIRECTION					1		
31.66	L†	R1-1	STOP	30"	4" X 4"	1	1			LUNT ROAD L†
31.66	R†	W1-7	TWO-DIRECTIONAL ARROW (SYMBOL)	48" X 24"	4" X 6"	1	1			LUNT ROAD L†
		N-1 (CA)	YELLOW OBJECT MARKER	18" X 18"						INSTALL BELOW W1-7
31.66	L†	W3-1	STOP AHEAD (SYMBOL)	36" X 36"	4" X 6"	1	1			LUNT ROAD L†
31.74	R†	R1-1	STOP	30"	4" X 4"	1	1			LUNT ROAD R†
31.74	L†	W1-7	TWO-DIRECTIONAL ARROW (SYMBOL)	48" X 24"	4" X 6"	1	1			LUNT ROAD R†
		N-1 (CA)	YELLOW OBJECT MARKER	18" X 18"						INSTALL BELOW W1-7
31.74	R†	W3-1	STOP AHEAD (SYMBOL)	36" X 36"	4" X 6"	1	1			LUNT ROAD R†
31.75	R†	D6-1	VISTA POINT WITH ARROW					1		
31.91	L†	W2-2 (MOD)	SIDE ROAD (MODIFIED) (SYMBOL)					1		
32.48	R†	W75 (CA)	LANE ENDS MERGE LEFT			1				
32.48	R†	W9-1R	RIGHT LANE ENDS	48" X 48"	4" X 6"		1			
32.57	R†	W4-2R	RIGHT LANE ENDS (SYMBOL)	48" X 48"	4" X 6"		1			
32.60	R†	W11 (CA)	PAVEMENT WIDTH TRANSITION (SYMBOL)			1				
32.64	R†	R4-1	DO NOT PASS	36" X 48"	4" X 6"	1	1			
32.83	R†	R1-1	STOP	30"	4" X 4"	1	1			YANKEE HILL ROAD R†
32.83	R†	W3-1	STOP AHEAD (SYMBOL)	36" X 36"	4" X 6"	1	1			YANKEE HILL ROAD R†
32.83	L†	R1-1	STOP	30"	4" X 4"	1	1			CONCOW ROAD L†
32.83	L†	W3-1	STOP AHEAD (SYMBOL)	36" X 36"	4" X 6"	1	1			CONCOW ROAD L†
33.39	R†	W2-2R	SIDE ROAD (RIGHT) (SYMBOL)	36" X 36"	4" X 6"	1	1			
33.57	R†	R1-1	STOP	30"	4" X 4"	1	1			DETLOW ROAD R†
33.57	L†	W1-7	TWO-DIRECTIONAL ARROW (SYMBOL)	48" X 24"	4" X 6"	1	1			DETLOW ROAD R†
		N-1 (CA)	YELLOW OBJECT MARKER	18" X 18"						INSTALL BELOW W1-7
33.57	R†	W3-1	STOP AHEAD (SYMBOL)	36" X 36"	4" X 6"	1	1			DETLOW ROAD R†
33.66	L†	W2-2L	SIDE ROAD (LEFT) (SYMBOL)	36" X 36"	4" X 6"	1	1			
34.01	R†	R1-1	STOP	30"	4" X 4"	1	1			BIG BEND ROAD R†
34.01	L†	R1-1	STOP	30"	4" X 4"	1	1			PINKSTON CYN ROAD L†
34.01	L†	W3-1	STOP AHEAD (SYMBOL)	36" X 36"	4" X 6"	1	1			PINKSTON CYN ROAD L†
34.14	R†	G28(70) (CA)	STATE ROUTE SHIELD / DIRECTION					1		
34.56	R†	W64 (CA)	SCHOOL BUS STOP 500 FT (FYG)					1		
					SHEET TOTAL	26	27	6	1	

SUMMARY OF QUANTITIES

Q-7

STATE OF CALIFORNIA - DEPARTMENT OF TRANSPORTATION
Caltrans®
DESIGN

FUNCTIONAL SUPERVISOR: GARY S. BIRCH
CALCULATED-DESIGNED BY: THOMAS N. LANGLEY
CHECKED BY: GARY DUGHI
REVISED BY
DATE REVISED

LAST REVISION 07-19-10
DATE PLOTTED => 10-AUG-2010
TIME PLOTTED => 07:56

Dist	COUNTY	ROUTE	POST MILES TOTAL PROJECT	SHEET No.	TOTAL SHEETS
03	But	70	28.8/41.0	25	37

Thomas N Langley 7-26-10
REGISTERED CIVIL ENGINEER DATE

7-26-10
PLANS APPROVAL DATE

REGISTERED PROFESSIONAL ENGINEER Thomas N. Langley No. 64882 Exp. 06-30-11 CIVIL STATE OF CALIFORNIA

THE STATE OF CALIFORNIA OR ITS OFFICERS OR AGENTS SHALL NOT BE RESPONSIBLE FOR THE ACCURACY OR COMPLETENESS OF SCANNED COPIES OF THIS PLAN SHEET.

ROADSIDE SIGN

LOCATION PM	LOCATION SIDE	(N) SIGN CODE	SIGN DESCRIPTION / MESSAGE	(N) PANEL SIZE	(N) POST SIZE	REMOVE ROADSIDE SIGN (EA)	ROADSIDE SIGN - ONE POST (EA)	RESET ROADSIDE SIGN (ONE POST) (EA)	RESET ROADSIDE SIGN (TWO POST) (EA)	REMARKS
35.91	R†	W1-2R	CURVE (RIGHT) (SYMBOL)	36" X 36"	4" X 6"	1	1			
		W13-1(45)	ADVISORY SPEED (45 MPH)	30" X 30"						INSTALL BELOW W1-2R
36.07	L†	W1-2L	CURVE (LEFT) (SYMBOL)	36" X 36"	4" X 6"	1	1			
		W13-1(40)	ADVISORY SPEED (40 MPH)	30" X 30"						INSTALL BELOW W1-2L
36.26	R†	W1-2L	CURVE (LEFT) (SYMBOL)	36" X 36"	4" X 6"	1	1			
		W13-1(35)	ADVISORY SPEED (35 MPH)	30" X 30"						INSTALL BELOW W1-2L
36.50	R†	W1-5R	WINDING ROAD (RIGHT) (SYMBOL)	36" X 36"	4" X 6"	1	1			
36.96	R†	W1-5L	WINDING ROAD (LEFT) (SYMBOL)	36" X 36"	4" X 6"	1	1			
37.43	L†	W1-5L	WINDING ROAD (LEFT) (SYMBOL)	36" X 36"	4" X 6"	1	1			
		W13-1(35)	ADVISORY SPEED (35 MPH)	30" X 30"						INSTALL BELOW W1-5L
37.46	R†	W1-4L	REVERSE CURVE (LEFT) (SYMBOL)	36" X 36"	4" X 6"	1	1			
		W13-1(35)	ADVISORY SPEED (35 MPH)	30" X 30"						INSTALL BELOW W1-4L
37.72	L†	W1-4L	REVERSE CURVE (LEFT) (SYMBOL)	36" X 36"	4" X 6"	1	1			
		W13-1(35)	ADVISORY SPEED (35 MPH)	30" X 30"						INSTALL BELOW W1-4L
37.80	R†	W1-2L	CURVE (LEFT) (SYMBOL)	36" X 36"	4" X 6"	1	1			
		W13-1(35)	ADVISORY SPEED (35 MPH)	30" X 30"						INSTALL BELOW W1-2L
37.98	R†	W1-5L	WINDING ROAD (LEFT) (SYMBOL)	36" X 36"	4" X 6"	1	1			
38.41	L†	W1-5R	WINDING ROAD (RIGHT) (SYMBOL)	36" X 36"	4" X 6"	1	1			
38.53	R†	W1-5L	WINDING ROAD (LEFT) (SYMBOL)	36" X 36"	4" X 6"	1	1			
38.94	R†	W1-5R	WINDING ROAD (RIGHT) (SYMBOL)	36" X 36"	4" X 6"	1	1			
39.56	R†	W1-5R	WINDING ROAD (RIGHT) (SYMBOL)	36" X 36"	4" X 6"	1	1			
39.78	L†	W1-5R	WINDING ROAD (RIGHT) (SYMBOL)	36" X 36"	4" X 6"	1	1			
39.97	L†	W1-3L	REVERSE TURN (LEFT) (SYMBOL)	36" X 36"	4" X 6"	1	1			
39.97	L†	W13-1(30)	ADVISORY SPEED (30 MPH)	30" X 30"						INSTALL BELOW W1-3L
40.29	L†	W1-4R	REVERSE TURN (RIGHT) (SYMBOL)	36" X 36"	4" X 6"	1	1			
		W13-1(35)	ADVISORY SPEED (35 MPH)	30" X 30"						INSTALL BELOW W1-4R
40.43	R†	W1-3L	REVERSE TURN (LEFT) (SYMBOL)	36" X 36"	4" X 6"	1	1			
		W13-1(30)	ADVISORY SPEED (30 MPH)	30" X 30"						INSTALL BELOW W1-3L
40.58	L†	W1-8L	CHEVRON ALIGNMENT (LEFT)	30" X 36"	4" X 6"	3	3			
40.65	L†	W1-3L	REVERSE TURN (LEFT) (SYMBOL)	36" X 36"	4" X 6"	1	1			
		W13-1(30)	ADVISORY SPEED (30 MPH)	30" X 30"						INSTALL BELOW W1-3L
40.78	R†	W8-5	SLIPPERY WHEN WET (SYMBOL)	36" X 36"	4" X 6"	1	1			
					SUBTOTAL	23	23	-	-	
					TOTAL FROM SHEET Q-7	26	27	6	1	
					TOTAL	49	50	6	1	

SUMMARY OF QUANTITIES

Q-8

STATE OF CALIFORNIA - DEPARTMENT OF TRANSPORTATION
Caltrans
DESIGN

FUNCTIONAL SUPERVISOR: GARY S. BIRCH
CALCULATED-DESIGNED BY: THOMAS N. LANGLEY
CHECKED BY: GARY DUGHI
REVISED BY
DATE REVISED

LAST REVISION 07-19-10
DATE PLOTTED => 10-AUG-2010
TIME PLOTTED => 07:56

DIST	COUNTY	ROUTE	POST MILES TOTAL PROJECT	SHEET NO.	TOTAL SHEETS
03	But	70	R28.8/41.0	26	37

Randell D. Hiatt
REGISTERED CIVIL ENGINEER

June 6, 2008
PLANS APPROVAL DATE

REGISTERED PROFESSIONAL ENGINEER
Randell D. Hiatt
No. C50200
Exp. 6-30-09
CIVIL
STATE OF CALIFORNIA

The State of California or its officers or agents shall not be responsible for the accuracy or completeness of electronic copies of this plan sheet.

To accompany plans dated July 26, 2010

NOTES:

1. When necessary to place dike in front of face of guard railing, only Type C dike may be used. For dike details, see Standard Plan A87B.
2. For standard railing post embedment, see Standard Plans A77C3.
3. Guard railing delineation to be used where shown on the Project Plans.
4. When dike or curb is placed under guard railing, the maximum height of the dike or curb shall be 4". Mountable dike should not be used. For dike and curb details, see Revised Standard Plans RSP A87A and Standard Plan A87B.
5. For details of typical distance between the face of rail and hinge point, see Standard Plan A77C3.

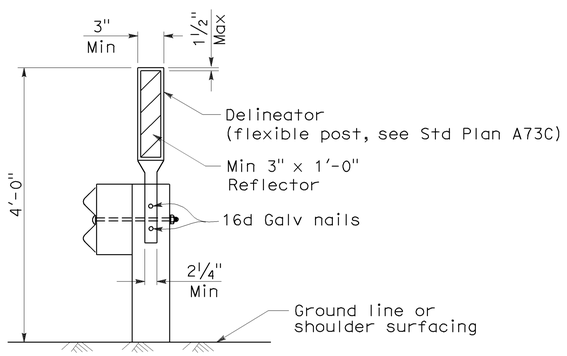

GUARD RAILING DELINEATION

See Note 3

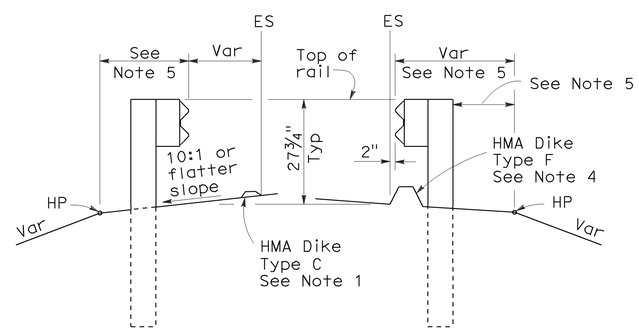

DIKE POSITIONING

See Note 1

STATE OF CALIFORNIA
DEPARTMENT OF TRANSPORTATION

METAL BEAM GUARD RAILING TYPICAL RAILING DELINEATION AND DIKE POSITIONING DETAILS

NO SCALE

RSP A77C4 DATED JUNE 6, 2008 SUPERSEDES STANDARD PLAN A77C4
DATED MAY 1, 2006 - PAGE 47 OF THE STANDARD PLANS BOOK DATED MAY 2006.

REVISED STANDARD PLAN RSP A77C4

2006 REVISED STANDARD PLAN RSP A77C4

12-10-07

DIST	COUNTY	ROUTE	POST MILES TOTAL PROJECT	SHEET NO.	TOTAL SHEETS
03	But	70	R28.8/41.0	27	37

Randell D. Hiatt
REGISTERED CIVIL ENGINEER

June 6, 2008
PLANS APPROVAL DATE

REGISTERED PROFESSIONAL ENGINEER Randell D. Hiatt No. C50200 Exp. 6-30-09 CIVIL STATE OF CALIFORNIA

The State of California or its officers or agents shall not be responsible for the accuracy or completeness of electronic copies of this plan sheet.

To accompany plans dated July 26, 2010

2006 REVISED STANDARD PLAN RSP A77E1

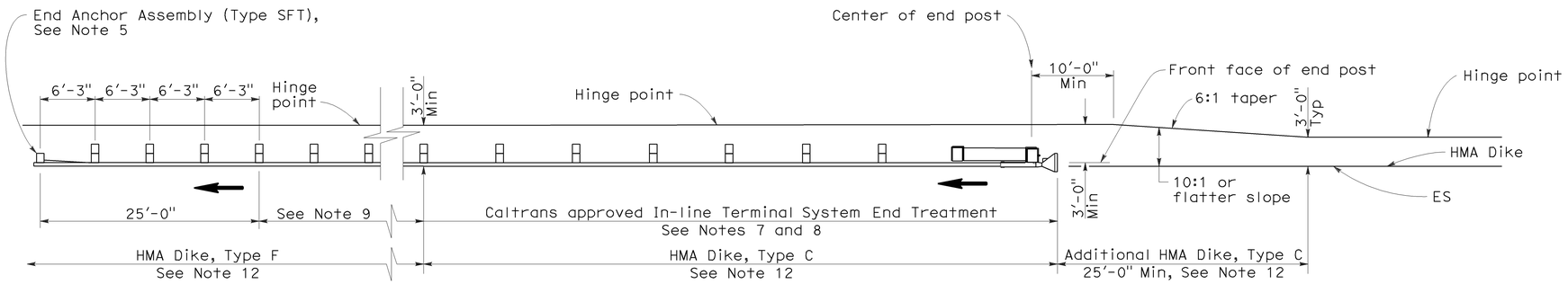

TYPE 11A LAYOUT

(EMBANKMENT GUARD INSTALLATION WITH IN-LINE END TREATMENT AT TRAFFIC APPROACH END OF RAILING)
See Note 6

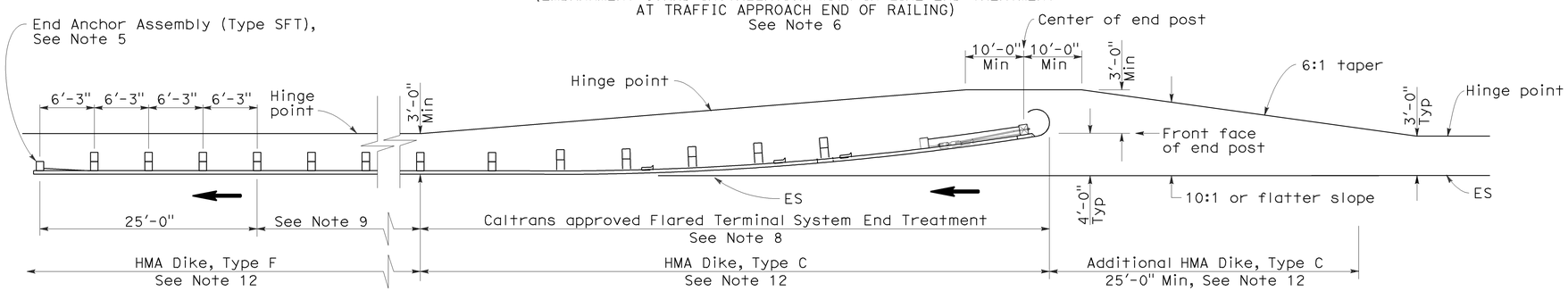

TYPE 11B LAYOUT

(EMBANKMENT GUARD RAILING INSTALLATION WITH FLARED END TREATMENT AT TRAFFIC APPROACH END OF RAILING)
See Note 6

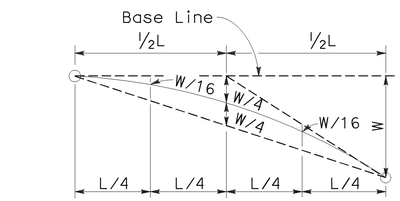

TYPICAL PARABOLIC LAYOUT

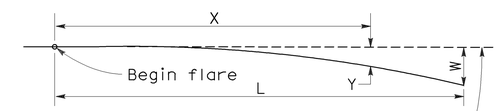

Base Line (Edge of paved shoulder or offset line of edge of traveled way)

$$Y = \frac{WX^2}{L^2}$$

Y = Offset from base line
W = Maximum offset
X = Distance along base line
L = Length of flare

PARABOLIC FLARE OFFSETS

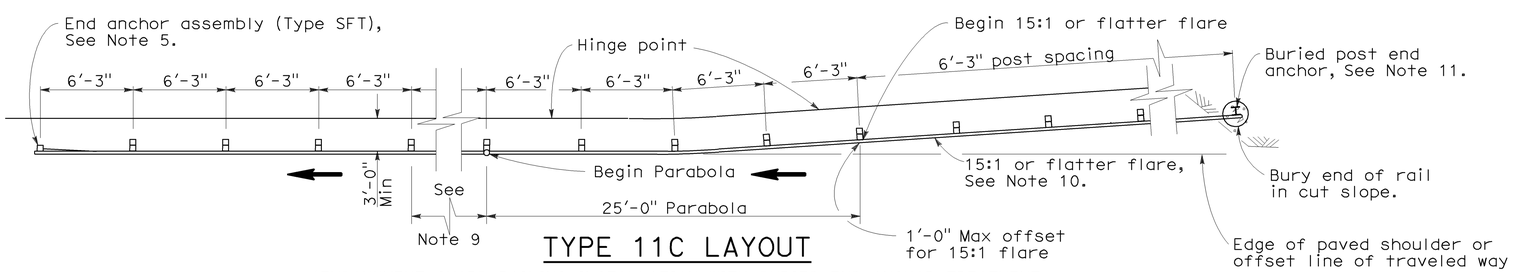

TYPE 11C LAYOUT

(EMBANKMENT GUARD RAILING INSTALLATION WITH BURIED END ANCHOR TREATMENT AT TRAFFIC APPROACH END OF RAILING)
See Notes 6 and 12

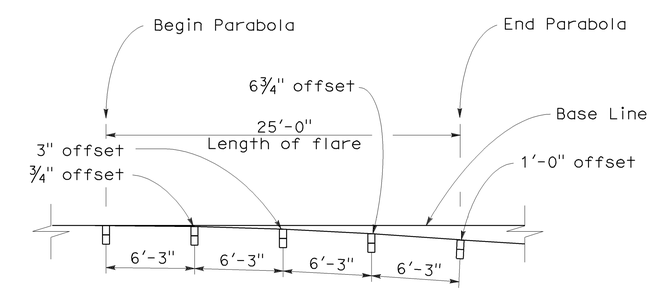

TYPICAL FLARE OFFSETS FOR 1 FOOT MAX END OFFSET

NOTES:

1. Line post, blocks and hardware to be used are shown on Standard Plans A77A1, A77A2, A77B1, A77C1, and A77C2.
2. Guard rail post spacing to be 6'-3" center to center, except as otherwise noted.
3. Except as noted, line posts are 6" x 8" x 6'-0" wood with 6" x 8" x 1'-2" wood blocks. W6 x 9 steel posts, 6'-0" in length, with 6" x 8" x 1'-2" notched wood blocks or recycled plastic blocks may be used for 6" x 8" x 6'-0" wood post with 6" x 8" x 1'-2" wood blocks where applicable and when specified.
4. Direction of adjacent traffic indicated by ➡.
5. For End Anchor Assembly (Type SFT) details, see Standard Plan A77H1.
6. Layout Types 11A, 11B or 11C are typically used where guard railing is recommended to shield embankment slopes and a crashworthy end treatment is required for only one direction of traffic.
7. In-line Terminal System End Treatments are used where site conditions will not accommodate a flared end treatment.
8. The type of terminal system end treatment to be used will be shown on the Project Plans.
9. Dependent on site conditions (embankment height and side slope), construction of additional guard railing (length equal to multiples of 12'-6" with 6'-3" post spacing) may be advisable.
10. The 15:1 or flatter flare used with buried end anchors is based on the edge of the paved shoulder or offset line of edge of the traveled way. The length of guard railing within the 15:1 or flatter flare is based on site conditions and should be a length equal to multiples of 12'-6".
11. For details of the buried post end anchor used with Type 11C Layout, see Standard Plan A77I2.
12. Where placement of dike is required with guard railing installations, see Revised Standard Plan RSP A77C4 for dike positioning details.

STATE OF CALIFORNIA
DEPARTMENT OF TRANSPORTATION

METAL BEAM GUARD RAILING TYPICAL LAYOUTS FOR EMBANKMENTS

NO SCALE

RSP A77E1 DATED JUNE 6, 2008 SUPERSEDES STANDARD PLAN A77E1 DATED MAY 1, 2006 - PAGE 48 OF THE STANDARD PLANS BOOK DATED MAY 2006.

REVISED STANDARD PLAN RSP A77E1

12-10-07

DIST	COUNTY	ROUTE	POST MILES TOTAL PROJECT	SHEET NO.	TOTAL SHEETS
03	But	70	R28.8/41.0	28	37

Randell D. Hiatt
REGISTERED CIVIL ENGINEER

June 6, 2008
PLANS APPROVAL DATE

REGISTERED PROFESSIONAL ENGINEER
Randell D. Hiatt
No. C50200
Exp. 6-30-09
CIVIL
STATE OF CALIFORNIA

The State of California or its officers or agents shall not be responsible for the accuracy or completeness of electronic copies of this plan sheet.

To accompany plans dated July 26, 2010

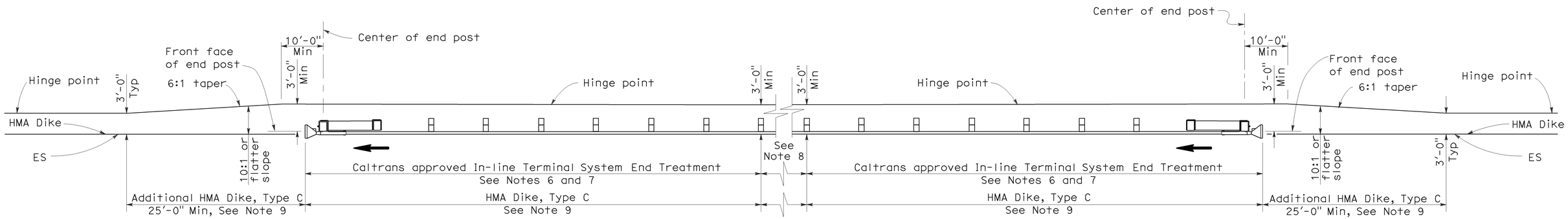

TYPE 11D LAYOUT

(EMBANKMENT GUARD RAILING INSTALLATION WITH IN-LINE END TREATMENT AT EACH END OF RAILING)
See Note 5

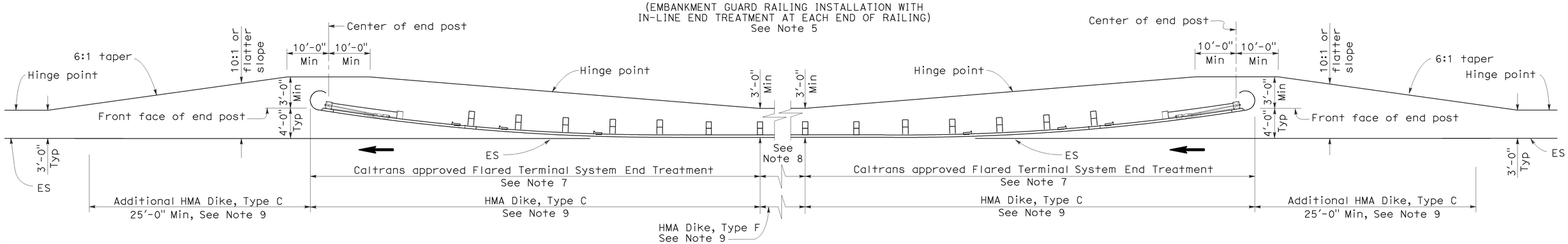

TYPE 11E LAYOUT

(EMBANKMENT GUARD RAILING INSTALLATION WITH FLARED END TREATMENT AT EACH END OF RAILING)
See Note 5

NOTES:

1. Line post, blocks and hardware to be used are shown on Standard Plans A77A1, A77A2, A77B1, A77C1 and A77C2.
2. Guard rail post spacing to be 6'-3" center to center, except as otherwise noted.
3. Except as noted, line posts are 6" x 8" x 6'-0" wood with 6" x 8" x 1'-2" wood blocks. W6 x 9 steel posts, 6'-0" in length, with 6" x 8" x 1'-2" notched wood blocks or plastic blocks may be used for 6" x 8" x 6'-0" wood post with 6" x 8" x 1'-2" wood blocks where applicable and when specified.
4. Direction of adjacent traffic indicated by ⟶.
5. Layout Types 11D through 11L, shown on the A77E Series of Revised Standard Plans, are typically used where guard railing is recommended to shield embankment slopes and a crashworthy end treatment is required for both directions of traffic.
6. In-line Terminal System End Treatments are used where site conditions will not accommodate a flared end treatment.
7. The type of terminal system end treatment to be used will be shown on the Project Plans.
8. Dependent on site conditions (embankment height and side slope), construction of additional guard railing (length equal to multiples of 12'-6" with 6'-3" post spacing) may be advisable.
9. Where placement of dike is required with guard railing installations, see Revised Standard Plan RSP A77C4 for dike positioning details.

STATE OF CALIFORNIA
DEPARTMENT OF TRANSPORTATION

METAL BEAM GUARD RAILING TYPICAL LAYOUTS FOR EMBANKMENTS

NO SCALE

RSP A77E2 DATED JUNE 6, 2008 SUPERSEDES STANDARD PLAN A77E2
DATED MAY 1, 2006 - PAGE 49 OF THE STANDARD PLANS BOOK DATED MAY 2006.

REVISED STANDARD PLAN RSP A77E2

2006 REVISED STANDARD PLAN RSP A77E2

12-10-07

DIST	COUNTY	ROUTE	POST MILES TOTAL PROJECT	SHEET NO.	TOTAL SHEETS
03	But	70	R28.8/41.0	29	37

Randell D. Hiatt
REGISTERED CIVIL ENGINEER

June 6, 2008
PLANS APPROVAL DATE

REGISTERED PROFESSIONAL ENGINEER
Randell D. Hiatt
No. C50200
Exp. 6-30-09
CIVIL
STATE OF CALIFORNIA

The State of California or its officers or agents shall not be responsible for the accuracy or completeness of electronic copies of this plan sheet.

To accompany plans dated July 26, 2010

2006 REVISED STANDARD PLAN RSP A77E3

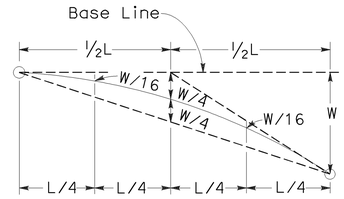

TYPICAL PARABOLIC LAYOUT

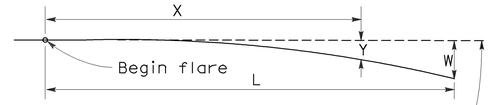

Base Line (Edge of paved shoulder or offset line of edge of traveled way)

$$Y = \frac{WX^2}{L^2}$$

Y = Offset from base line
W = Maximum offset
X = Distance along base line
L = Length of flare

PARABOLIC FLARE OFFSETS

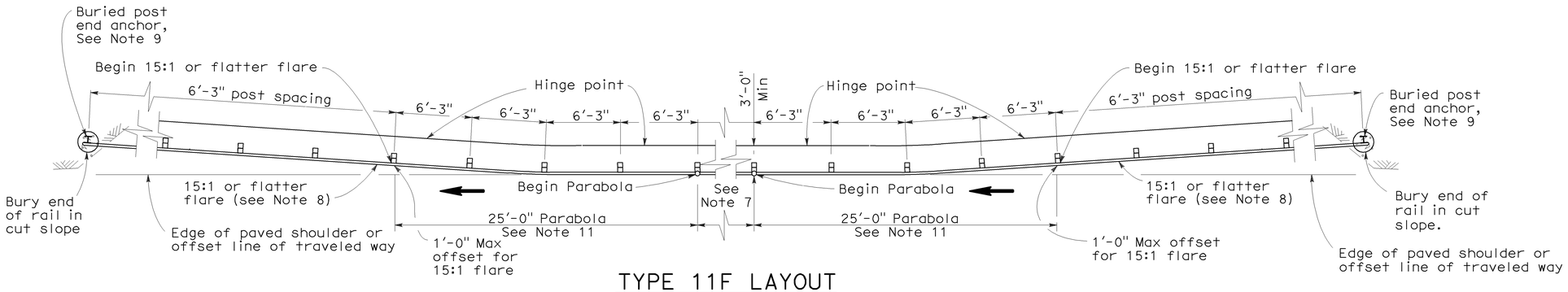

TYPE 11F LAYOUT

(EMBANKMENT GUARD RAILING INSTALLATION WITH A BURIED END ANCHOR TREATMENT AT EACH END OF RAILING)
See Notes 5 and 10

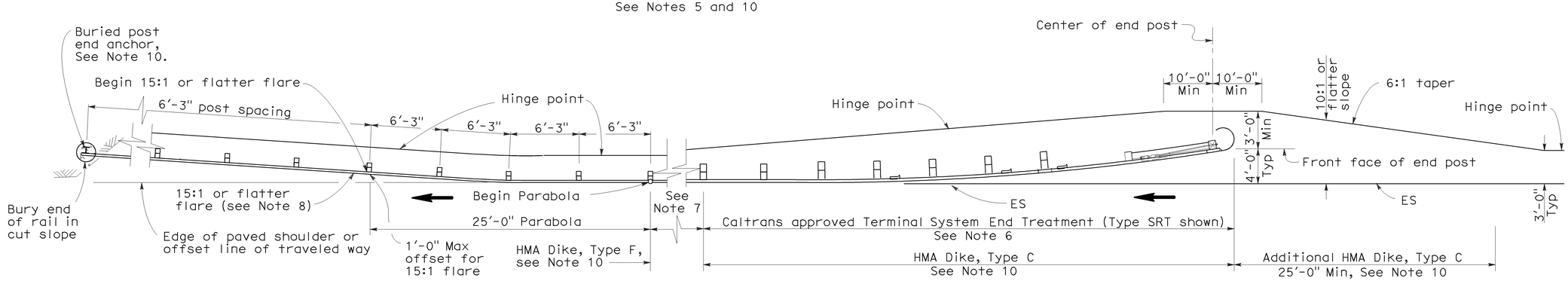

TYPE 11G LAYOUT

(EMBANKMENT GUARD RAILING INSTALLATION WITH FLARED END TREATMENT AND A BURIED END ANCHOR TREATMENT AT THE ENDS OF RAILING)
See Notes 5 and 10

NOTES:

1. Line post, blocks and hardware to be used are shown on Standard Plans A77A1, A77A2, A77B1, A77C1 and A77C2.
2. Guard rail post spacing to be 6'-3" center to center, except as otherwise noted.
3. Except as noted, line posts are 6" x 8" x 6'-0" wood with 6" x 8" x 1'-2" wood blocks. W6 x 9 steel posts, 6'-0" in length, with 6" x 8" x 1'-2" notched wood blocks or plastic blocks may be used for 6" x 8" x 6'-0" wood post with 6" x 8" x 1'-2" wood blocks where applicable and when specified.
4. Direction of adjacent traffic indicated by ⟶.
5. Layout Types 11D through 11L, shown on the A77E Series of Revised Standard Plans, are typically used where guard railing is recommended to shield embankment slopes and a crashworthy end treatment is required for both directions of traffic.
6. The type of terminal system end treatment to be used will be shown on the Project Plans.
7. Dependent on site conditions (embankment height and side slope), construction of additional guard railing (length equal to multiples of 12'-6" with 6'-3" post spacing) may be advisable.
8. The 15:1 or flatter flare used with buried end anchors is based on the edge of the paved shoulder or offset line of edge of the traveled way. The length of guard railing within the 15:1 or flatter flare is based on site conditions and should be a length equal to multiples of 12'-6".
9. For details of the buried post end anchor used with Type 11F and 11G Layouts, see Standard Plan A77I2.
10. Where placement of dike is required with guard railing installations, see Revised Standard Plan RSP A77C4 for dike positioning details.
11. For typical flare offsets for 25'-0" length parabola with maximum offset of 1'-0", see Revised Standard Plan RSP A77E1.

STATE OF CALIFORNIA
DEPARTMENT OF TRANSPORTATION

METAL BEAM GUARD RAILING TYPICAL LAYOUTS FOR EMBANKMENTS

NO SCALE

RSP A77E3 DATED JUNE 6, 2008 SUPERSEDES STANDARD PLAN A77E3 DATED MAY 1, 2006 - PAGE 50 OF THE STANDARD PLANS BOOK DATED MAY 2006.

REVISED STANDARD PLAN RSP A77E3

12-10-07

DIST	COUNTY	ROUTE	POST MILES TOTAL PROJECT	SHEET NO.	TOTAL SHEETS
03	But	70	R28.8/41.0	30	37

Randell D. Hiatt
REGISTERED CIVIL ENGINEER

June 6, 2008
PLANS APPROVAL DATE

REGISTERED PROFESSIONAL ENGINEER
Randell D. Hiatt
No. C50200
Exp. 6-30-09
CIVIL
STATE OF CALIFORNIA

The State of California or its officers or agents shall not be responsible for the accuracy or completeness of electronic copies of this plan sheet.

To accompany plans dated July 26, 2010

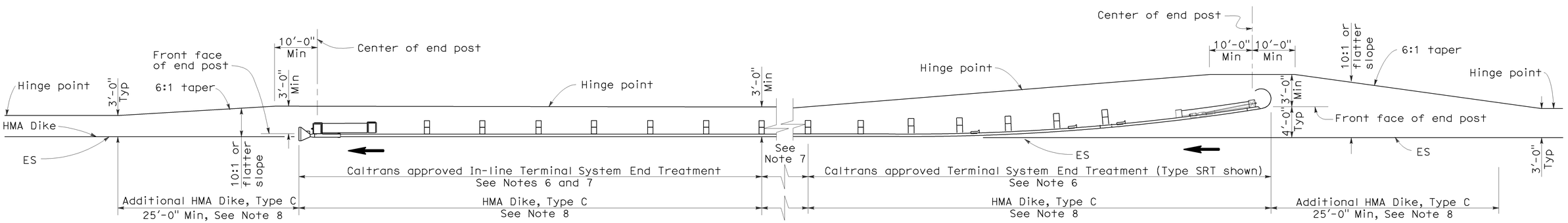

TYPE 11H LAYOUT

(EMBANKMENT GUARD RAILING INSTALLATION WITH FLARED END TREATMENT
AND AN IN-LINE TREATMENT AT THE ENDS OF RAILING)
See Notes 5 and 8

NOTES:

1. Line post, blocks and hardware to be used are shown on Standard Plans A77A1, A77A2, A77B1, A77C1 and A77C2.
2. Guard rail post spacing to be 6'-3" center to center, except as otherwise noted.
3. Except as noted, line posts are 6" x 8" x 6'-0" wood with 6" x 8" x 1'-2" wood blocks. W6 x 9 steel posts, 6'-0" in length, with 6" x 8" x 1'-2" notched wood blocks or plastic blocks may be used for 6" x 8" x 6'-0" wood post with 6" x 8" x 1'-2" wood blocks where applicable and when specified.
4. Direction of adjacent traffic indicated by ⟶.
5. Layout Types 11D through 11L, shown on the A77E Series of Revised Standard Plans, are typically used where guard railing is recommended to shield embankment slopes and a crashworthy end treatment is required for both directions of traffic.
6. The type of terminal system end treatment to be used will be shown on the Project Plans.
7. Dependent on site conditions (embankment height and side slope), construction of additional guard railing (length equal to multiples of 12'-6" with 6'-3" post spacing) may be advisable.
8. Where placement of dike is required with guard railing installations, see Revised Standard Plan RSP A77C4 for dike positioning details.

STATE OF CALIFORNIA
DEPARTMENT OF TRANSPORTATION

METAL BEAM GUARD RAILING TYPICAL LAYOUTS FOR EMBANKMENTS

NO SCALE

RSP A77E4 DATED JUNE 6, 2008 SUPERSEDES STANDARD PLAN A77E4
DATED MAY 1, 2006 - PAGE 51 OF THE STANDARD PLANS BOOK DATED MAY 2006.

REVISED STANDARD PLAN RSP A77E4

2006 REVISED STANDARD PLAN RSP A77E4

12-10-07

DIST	COUNTY	ROUTE	POST MILES TOTAL PROJECT	SHEET NO.	TOTAL SHEETS
03	But	70	R28.8/41.0	31	37

Randell D. Hiatt
REGISTERED CIVIL ENGINEER

June 6, 2008
PLANS APPROVAL DATE

REGISTERED PROFESSIONAL ENGINEER Randell D. Hiatt No. C50200 Exp. 6-30-09 CIVIL STATE OF CALIFORNIA

The State of California or its officers or agents shall not be responsible for the accuracy or completeness of electronic copies of this plan sheet.

To accompany plans dated July 26, 2010

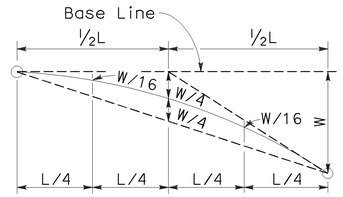

TYPICAL PARABOLIC LAYOUT

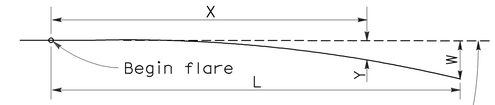

Base Line (Edge of paved shoulder or offset line of edge of traveled way)

$$Y = \frac{WX^2}{L^2}$$

Y = Offset from base line
W = Maximum offset
X = Distance along base line
L = Length of flare

PARABOLIC FLARE OFFSETS

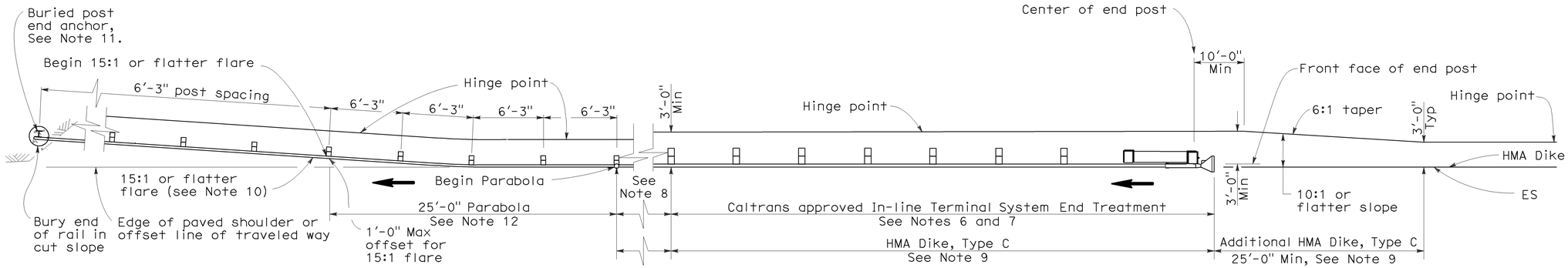

TYPE 11I LAYOUT

(EMBANKMENT GUARD RAILING INSTALLATION WITH IN-LINE END TREATMENT AND A BURIED END ANCHOR TREATMENT AT THE ENDS OF RAILING)
See Note 5

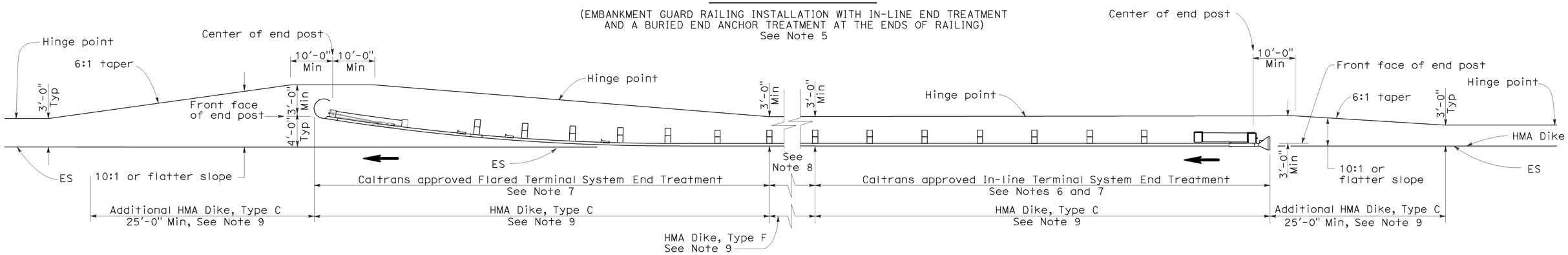

TYPE 11J LAYOUT

(EMBANKMENT GUARD RAILING INSTALLATION WITH IN-LINE END TREATMENT AND FLARED END TREATMENT AT THE ENDS OF RAILING)
See Note 5

NOTES:

1. Line post, blocks and hardware to be used are shown on Standard Plans A77A1, A77A2, A77B1, A77C1 and A77C2.
2. Guard rail post spacing to be 6'-3" center to center, except as otherwise noted.
3. Except as noted, line posts are 6" x 8" x 6'-0" wood with 6" x 8" x 1'-2" wood blocks. W6 x 9 steel posts, 6'-0" in length, with 6" x 8" x 1'-2" notched wood blocks or plastic blocks may be used for 6" x 8" x 6'-0" wood post with 6" x 8" x 1'-2" wood blocks where applicable and when specified.
4. Direction of adjacent traffic indicated by ⟶.
5. Layout Types 11D through 11L, shown on the A77E Series of Revised Standard Plans, are typically used where guard railing is recommended to shield embamkment slopes and a crashworthy end treatment is required for both directions of traffic.
6. In-line Terminal System End Treatments are used where site conditions will not accommodate a flared end treatment.
7. The type of terminal system end treatment to be used will be shown on the Project Plans.
8. Dependent on site conditions (embankment height and side slope), construction of additional guard railing (length equal to multiples of 12'-6" with 6'-3" post spacing) may be advisable.
9. Where placement of dike is required with guard railing installations, see Revised Standard Plan RSP A77C4 for dike positioning details.
10. The 15:1 or flatter flare used with buried end anchors is based on the edge of the paved shoulder or offset line of edge of the traveled way. The length of guard railing within the 15:1 or flatter flare is based on site conditions and should be a length equal to multiples of 12'-6".
11. For details of the buried post end anchor used with Type 11I Layout, see Standard Plan A77I2.
12. For typical flare offsets for 25'-0" length parabola with maximum offset of 1'-0", see Revised Standard Plan RSP A77E1.

STATE OF CALIFORNIA
DEPARTMENT OF TRANSPORTATION

METAL BEAM GUARD RAILING TYPICAL LAYOUTS FOR EMBANKMENTS

NO SCALE

RSP A77E5 DATED JUNE 6, 2008 SUPERSEDES STANDARD PLAN A77E5 DATED MAY 1, 2006 - PAGE 52 OF THE STANDARD PLANS BOOK DATED MAY 2006.

REVISED STANDARD PLAN RSP A77E5

2006 REVISED STANDARD PLAN RSP A77E5

12-10-07

DIST	COUNTY	ROUTE	POST MILES TOTAL PROJECT	SHEET NO.	TOTAL SHEETS
03	But	70	R28.8/41.0	32	37

Randell D. Hiatt
REGISTERED CIVIL ENGINEER

June 6, 2008
PLANS APPROVAL DATE

REGISTERED PROFESSIONAL ENGINEER
Randell D. Hiatt
No. C50200
Exp. 6-30-09
CIVIL
STATE OF CALIFORNIA

The State of California or its officers or agents shall not be responsible for the accuracy or completeness of electronic copies of this plan sheet.

To accompany plans dated July 26, 2010

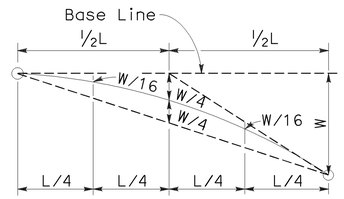

TYPICAL PARABOLIC LAYOUT

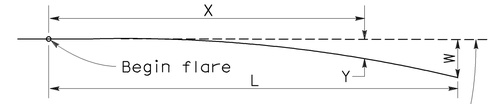

Base Line (Edge of paved shoulder or offset line of edge of traveled way)

$$Y = \frac{WX^2}{L^2}$$

Y = Offset from base line
W = Maximum offset
X = Distance along base line
L = Length of flare

PARABOLIC FLARE OFFSETS

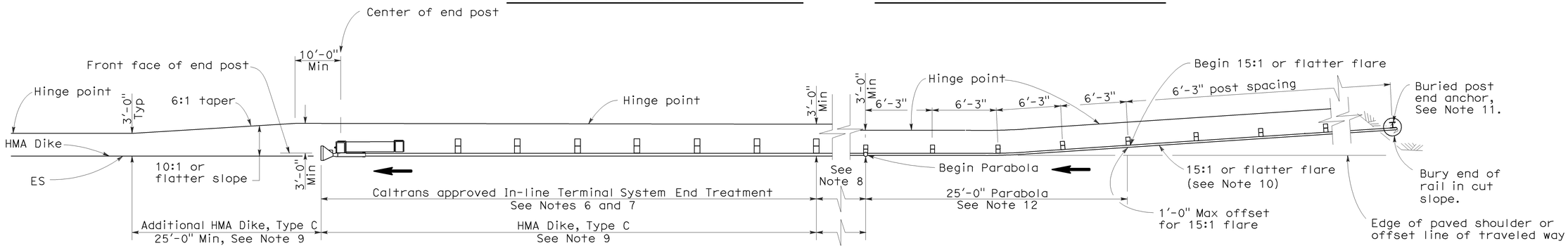

TYPE 11K LAYOUT

(EMBANKMENT GUARD RAILING INSTALLATION WITH A BURIED END ANCHOR TREATMENT AND AN IN-LINE END TREATMENT AT THE ENDS OF RAILING)
See Note 5

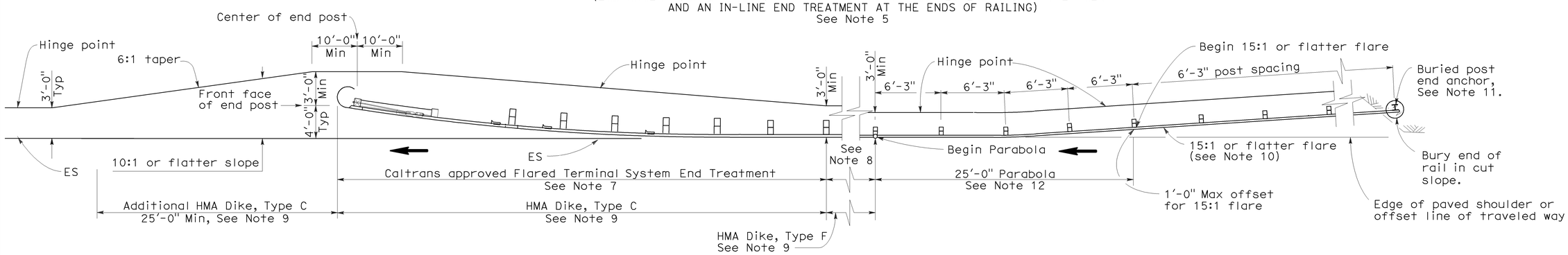

TYPE 11L LAYOUT

(EMBANKMENT GUARD RAILING INSTALLATION WITH A BURIED END ANCHOR TREATMENT AND A FLARED END TREATMENT AT THE ENDS OF RAILING)
See Note 5

NOTES:

1. Line post, blocks and hardware to be used are shown on Standard Plans A77A1, A77A2, A77B1, A77C1 and A77C2.
2. Guard rail post spacing to be 6'-3" center to center, except as otherwise noted.
3. Except as noted, line posts are 6" x 8" x 6'-0" wood with 6" x 8" x 1'-2" wood blocks. W6 x 9 steel posts, 6'-0" in length, with 6" x 8" x 1'-2" notched wood blocks or plastic blocks may be used for 6" x 8" x 6'-0" wood post with 6" x 8" x 1'-2" wood blocks where applicable and when specified.
4. Direction of adjacent traffic indicated by ⟶.
5. Layout Types 11D through 11L, shown on the A77E Series of Revised Standard Plans, are typically used where guard railing is recommended to shield embamkment slopes and a crashworthy end treatment is required for both directions of traffic.
6. In-line Terminal System End Treatments are used where site conditions will not accommodate a flared end treatment.
7. The type of terminal system end treatment to be used will be shown on the Project Plans.
8. Dependent on site conditions (embankment height and side slope), construction of additional guard railing (length equal to multiples of 12'-6" with 6'-3" post spacing) may be advisable.
9. Where placement of dike is required with guard railing installations, see Revised Standard Plan RSP A77C4 for dike positioning details.
10. The 15:1 or flatter flare used with buried end anchors is based on the edge of the paved shoulder or offset line of edge of the traveled way. The length of guard railing within the 15:1 or flatter flare is based on site conditions and should be a length equal to multiples of 12'-6".
11. For details of the buried post end anchor used with Type 11K and 11L Layouts, see Standard Plan A77I2.
12. For typical flare offsets for 25'-0" length parabola with maximum offset of 1'-0", see Revised Standard Plan RSP A77E1.

STATE OF CALIFORNIA
DEPARTMENT OF TRANSPORTATION

METAL BEAM GUARD RAILING TYPICAL LAYOUTS FOR EMBANKMENTS

NO SCALE

RSP A77E6 DATED JUNE 6, 2008 SUPERSEDES STANDARD PLAN A77E6
DATED MAY 1, 2006 - PAGE 53 OF THE STANDARD PLANS BOOK DATED MAY 2006.

REVISED STANDARD PLAN RSP A77E6

2006 REVISED STANDARD PLAN RSP A77E6

12-10-07

DIST	COUNTY	ROUTE	POST MILES TOTAL PROJECT	SHEET NO.	TOTAL SHEETS
03	But	70	R28.8/41.0	33	37

Randell D. Hiatt
REGISTERED CIVIL ENGINEER

June 5, 2009
PLANS APPROVAL DATE

REGISTERED PROFESSIONAL ENGINEER
Randell D. Hiatt
No. C50200
Exp. 6-30-09
CIVIL
STATE OF CALIFORNIA

The State of California or its officers or agents shall not be responsible for the accuracy or completeness of electronic copies of this plan sheet.

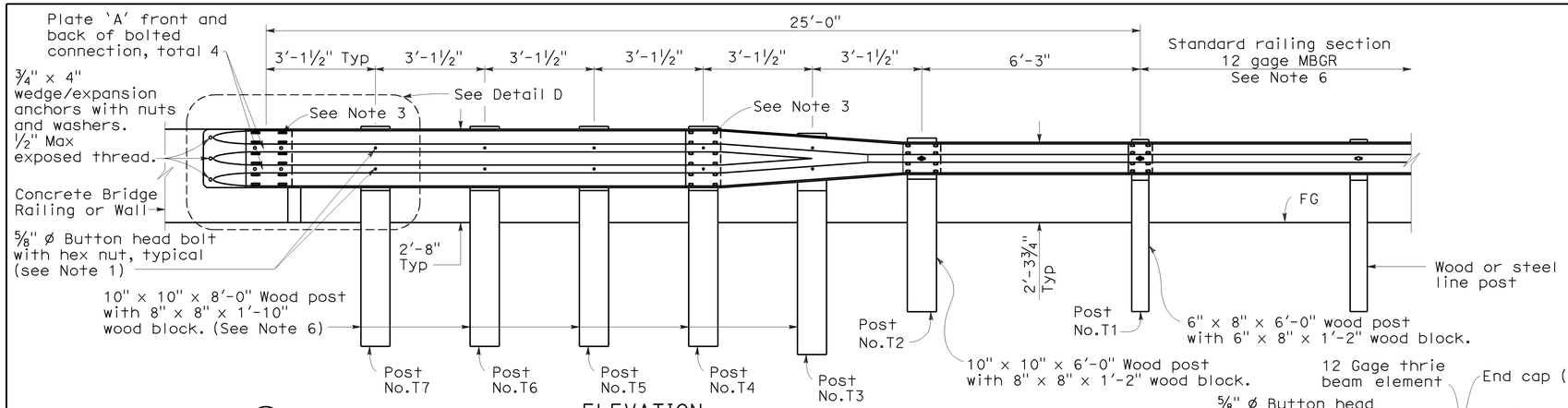

ELEVATION

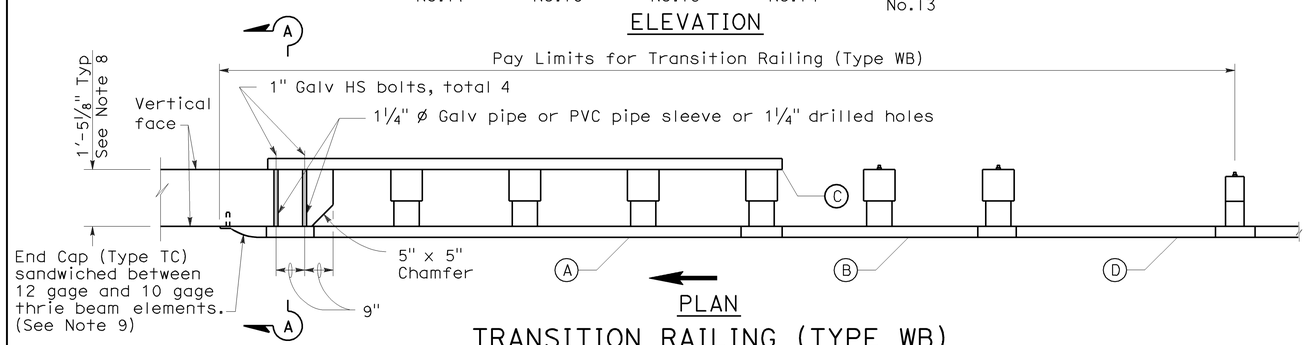

PLAN

TRANSITION RAILING (TYPE WB)

(No Blockout Attachment)

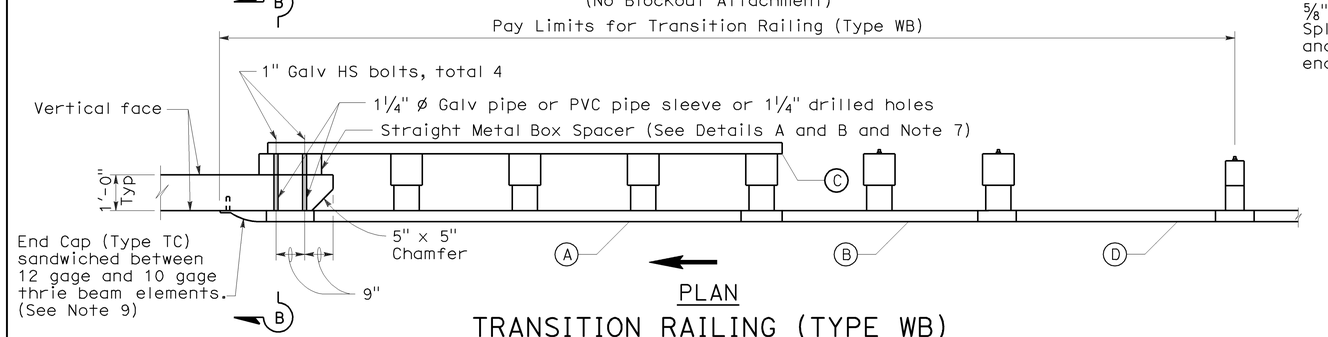

PLAN

TRANSITION RAILING (TYPE WB)

(Blockout Attachment)

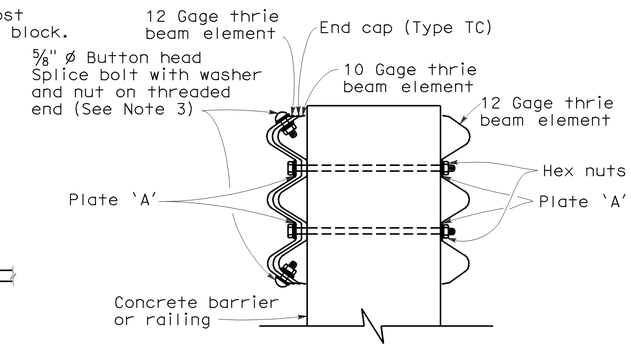

SECTION A-A

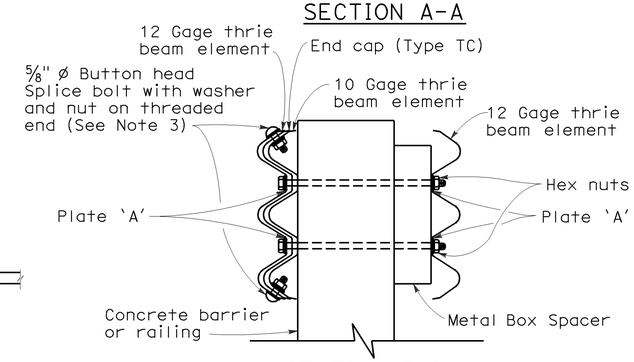

SECTION B-B

NOTES:

To accompany plans dated July 26, 2010

1. Use 5/8 " ø Button head bolts and hex nuts for connections to posts. No washer on rail face for bolted connections to post.
2. The nested rail elements, end cap, and 'W' beam to thrie beam element may be spliced together prior to bolting the elements to the wood post and concrete barrier or railing.
3. Exterior splice bolt holes for rail element splices at Post No.T4 and the connection to the concrete barrier or railing shall be the standard 29/32 " x 1 1/8 " slot size. Interior splice bolt holes at these locations may be increased up to 1 1/4 " ø. Only the top 2 and the bottom 2 splice bolts with washers and nuts are required for rail splices at Post No.T4 and the connection to the concrete barrier or railing.
4. Direction of adjacent traffic indicated by →.
5. The top elevation of Post Nos.T2 through T7 shall not project more than 1" above the top elevation of the rail element.
6. Typically, the railing connected to Transition Railing (Type WB) will be either standard railing section of metal beam guard railing or an approved Caltrans end treatment attached to Post No.T1.
7. The depth of the metal box spacer varies from the 5 1/8 " to 1 1/2 " and is dependent on the width of the concrete railing or wall. The combined dimension for the depth of the metal box spacer plus the width of railing or wall is typically 17 1/8 ". Where the space between the backside of the concrete railing or wall and the rear thrie beam element is less than 1 1/2 ", metal plates similar to Plate 'A' are to be used as spacers.
8. Where the width of the concrete railing or wall is greater than 17 1/8 ", wood blocks are to be used to fill the space created between the backside of Posts No.4 through No.7 and the rear thrie beam element. These wood blocks shall be 8" in width and 1'-2" in length. The dimension between the front thrie beam element and the rear thrie beam element is to match the width of the concrete railing or wall.
9. End cap may be installed over 12 gage and 10 gage thrie beam elements where transition railing is installed on the departure end of bridge railing.

LEGEND

(A) Nested thrie beam elements (one 12 gage element nested over one 10 gage element).

(B) One 10 gage "W" beam to thrie beam element.

(C) One 12 gage thrie beam element.

(D) One 10 gage "W" beam rail element (7'-3½" length)

10 gage = 0.135" thick

12 gage = 0.108" thick

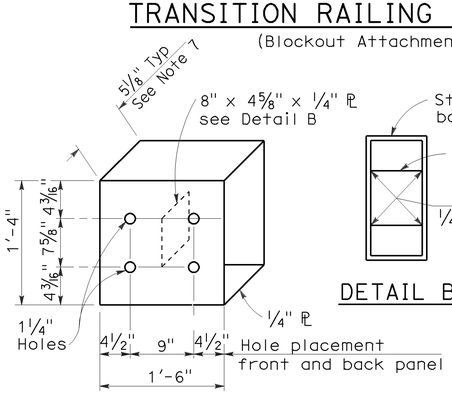

DETAIL A

STRAIGHT METAL BOX SPACER

DETAIL B

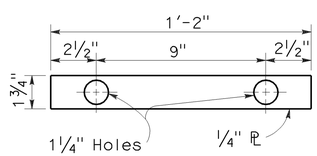

DETAIL C

PLATE 'A'

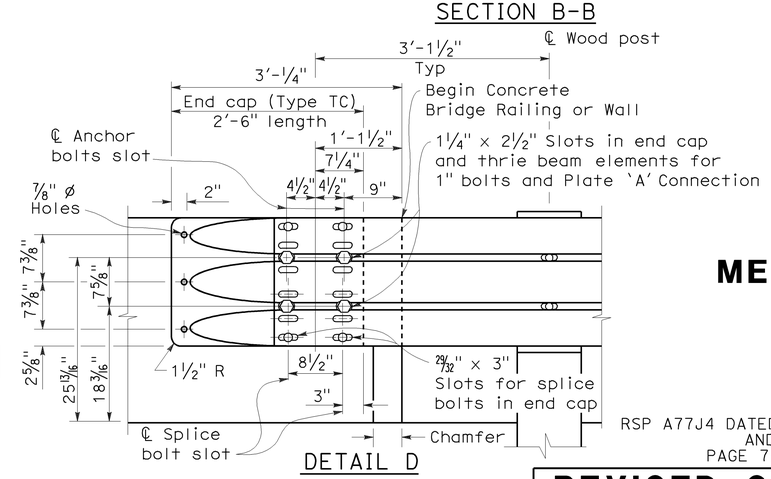

DETAIL D

STATE OF CALIFORNIA
DEPARTMENT OF TRANSPORTATION

METAL BEAM GUARD RAILING TRANSITION RAILING (TYPE WB)

NO SCALE

RSP A77J4 DATED JUNE 5, 2009 SUPERSEDES RSP A77J4 DATED JUNE 6, 2008 AND STANDARD PLAN A77J4 DATED MAY 1, 2006 - PAGE 75 OF THE STANDARD PLANS BOOK DATED MAY 2006.

REVISED STANDARD PLAN RSP A77J4

2006 REVISED STANDARD PLAN RSP A77J4

5-14-09

DIST	COUNTY	ROUTE	POST MILES TOTAL PROJECT	SHEET NO.	TOTAL SHEETS
03	But	70	R28.8/41.0	34	37

Randell D. Hiatt
REGISTERED CIVIL ENGINEER

June 6, 2008
PLANS APPROVAL DATE

REGISTERED PROFESSIONAL ENGINEER
Randell D. Hiatt
No. C50200
Exp. 6-30-09
CIVIL
STATE OF CALIFORNIA

The State of California or its officers or agents shall not be responsible for the accuracy or completeness of electronic copies of this plan sheet.

To accompany plans dated July 26, 2010

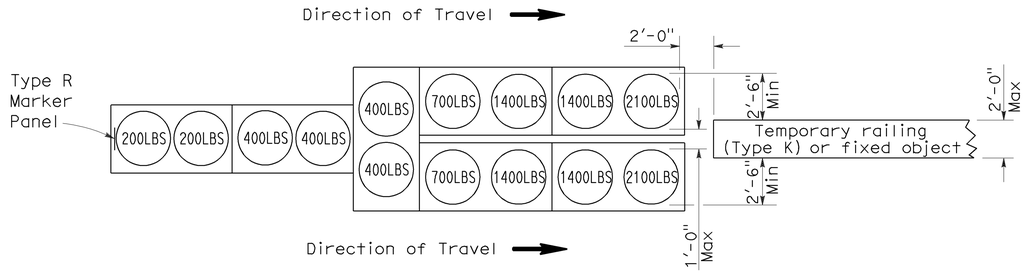

ARRAY 'TU14'

Approach speed 45 mph or more

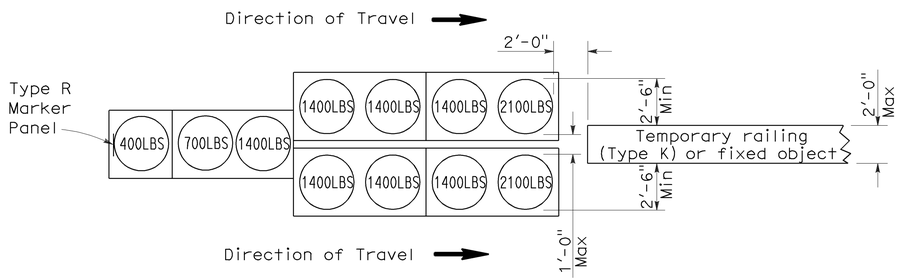

ARRAY 'TU11'

Approach speed less than 45 mph

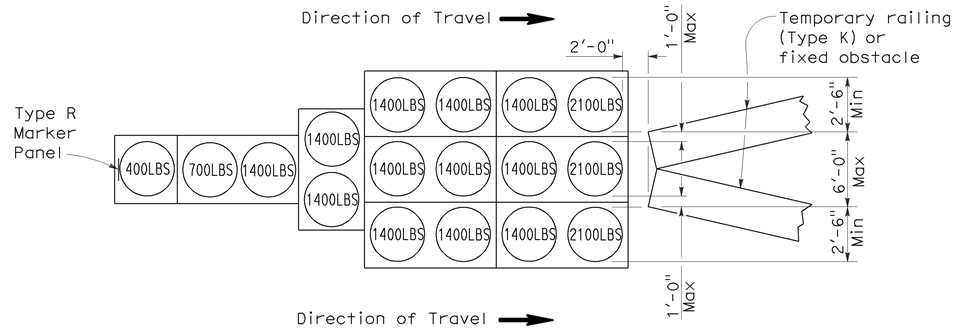

ARRAY 'TU17'

Approach speed less than 45 mph

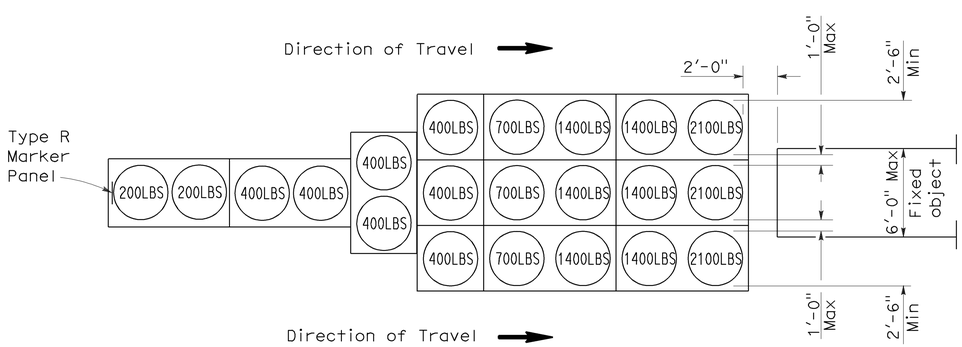

ARRAY 'TU21'

Approach speed 45 mph or more

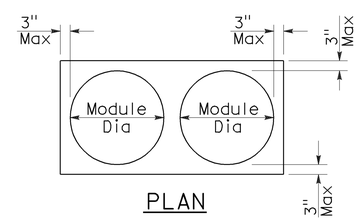

PLAN

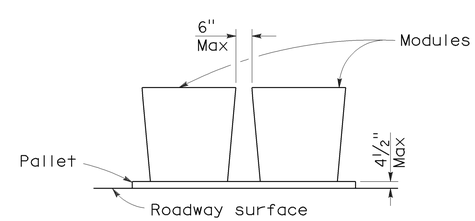

ELEVATION

CRASH CUSHION PALLET DETAIL

See Note 7

NOTES:

1. (XXX) Indicates sand filled module location and weight of sand in pounds for each module. Module spacing is based on the greater diameter of the module.
2. All sand weights are nominal.
3. Temporary crash cushion arrays shall not encroach on the traveled way.
4. Place the top of Type R marker panel 1" below the module lid.
5. Refer to Standard Plan A73B for marker details.
6. Approach speeds indicated conform to NCHRP 350 Report criteria.
7. Use of pallets is optional.

STATE OF CALIFORNIA
DEPARTMENT OF TRANSPORTATION

TEMPORARY CRASH CUSHION, SAND FILLED (UNIDIRECTIONAL)

NO SCALE

RSP T1A DATED JUNE 6, 2008 SUPERSEDES STANDARD PLAN T1A
DATED MAY 1, 2006 - PAGE 211 OF THE STANDARD PLANS BOOK DATED MAY 2006.

REVISED STANDARD PLAN RSP T1A

2006 REVISED STANDARD PLAN RSP T1A

DIST	COUNTY	ROUTE	POST MILES TOTAL PROJECT	SHEET NO.	TOTAL SHEETS
03	But	70	R28.8/41.0	35	37

Randell D. Hiatt
REGISTERED CIVIL ENGINEER

June 6, 2008
PLANS APPROVAL DATE

REGISTERED PROFESSIONAL ENGINEER
Randell D. Hiatt
No. C50200
Exp. 6-30-09
CIVIL
STATE OF CALIFORNIA

The State of California or its officers or agents shall not be responsible for the accuracy or completeness of electronic copies of this plan sheet.

To accompany plans dated July 26, 2010

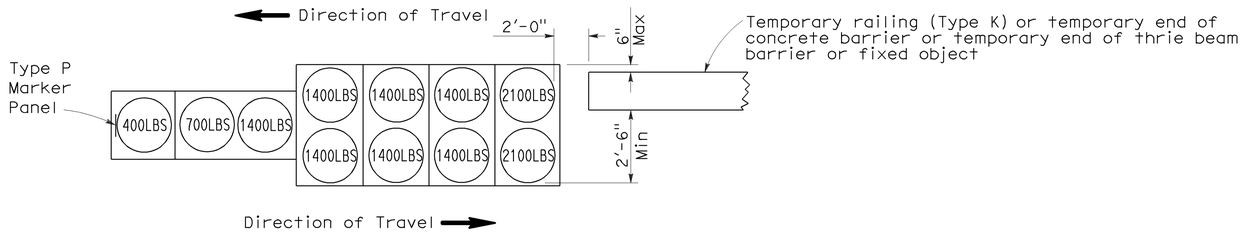

ARRAY 'TB11'

Approach speed less than 45 mph

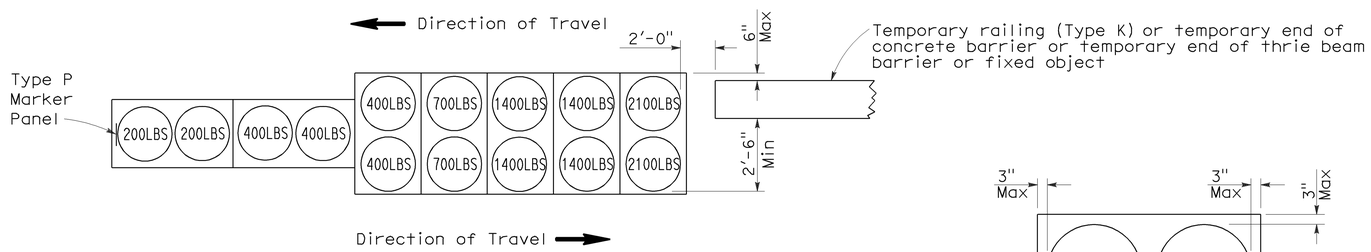

ARRAY 'TB14'

Approach speed 45 mph or more

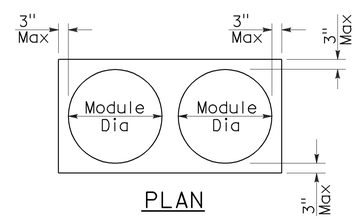

PLAN

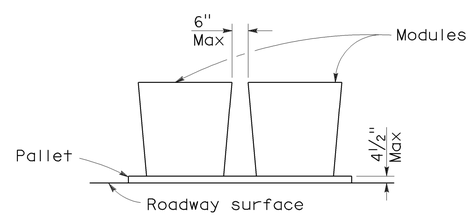

ELEVATION

CRASH CUSHION PALLET DETAIL

See Note 7

NOTES:

1. (XXX) Indicates sand filled module location and weight of sand in pounds for each module. Module spacing is based on the greater diameter of the module.
2. All sand weights are nominal.
3. Temporary crash cushion arrays shall not encroach on the traveled way.
4. Place the Type P marker panel so that the bottom of the panel rests upon the pallet.
5. Refer to Standard Plan A73B for marker details.
6. Approach speeds indicated conform to NCHRP 350 Report criteria.
7. Use of pallets is optional.

STATE OF CALIFORNIA
DEPARTMENT OF TRANSPORTATION

TEMPORARY CRASH CUSHION, SAND FILLED (BIDIRECTIONAL)

NO SCALE

RSP T1B DATED JUNE 6, 2008 SUPERSEDES STANDARD PLAN T1B
DATED MAY 1, 2006 - PAGE 212 OF THE STANDARD PLANS BOOK DATED MAY 2006.

REVISED STANDARD PLAN RSP T1B

2006 REVISED STANDARD PLAN RSP T1B

5-15-08

DIST	COUNTY	ROUTE	POST MILES TOTAL PROJECT	SHEET NO.	TOTAL SHEETS
03	But	70	R28.8/41.0	36	37

Randell D. Hiatt
REGISTERED CIVIL ENGINEER

June 6, 2008
PLANS APPROVAL DATE

REGISTERED PROFESSIONAL ENGINEER
Randell D. Hiatt
No. C50200
Exp. 6-30-09
CIVIL
STATE OF CALIFORNIA

The State of California or its officers or agents shall not be responsible for the accuracy or completeness of electronic copies of this plan sheet.

To accompany plans dated July 26, 2010

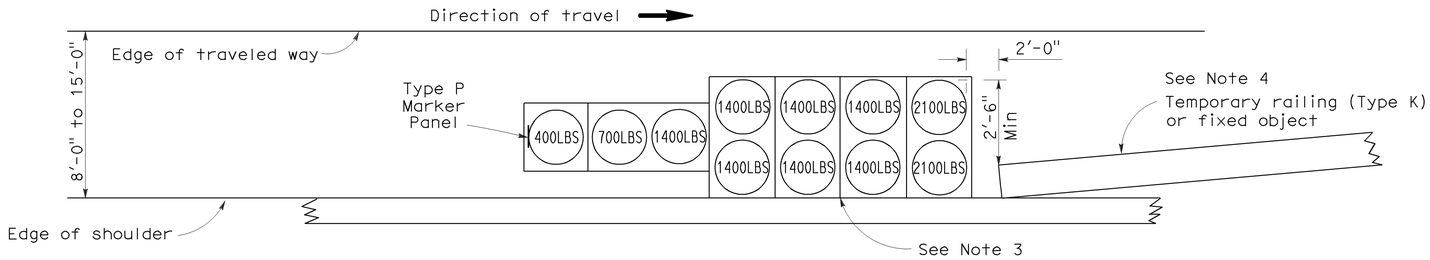

ARRAY 'TS11'

Approach speed less than 45 mph
See Note 9

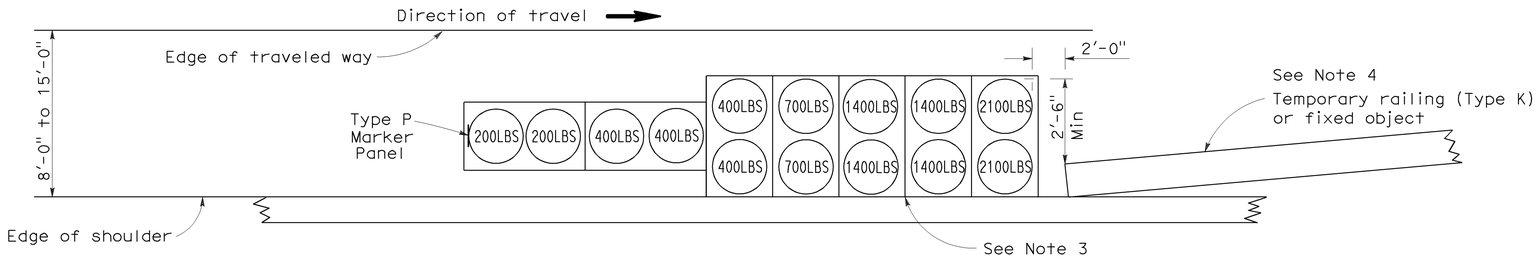

ARRAY 'TS14'

Approach speed 45 mph or more
See Note 9

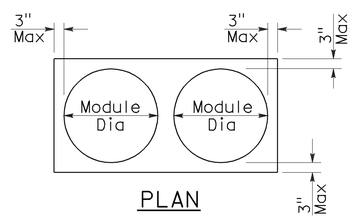

PLAN

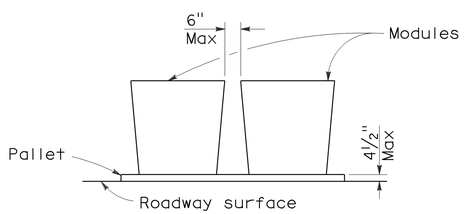

ELEVATION

CRASH CUSHION PALLET DETAIL

See Note 11

NOTES:

1. (XXX) Indicates sand filled module location and weight of sand in pounds for each module. Module spacing is based on the greater diameter of the module.
2. All sand weights are nominal.
3. The temporary crash cushion arrays shown on this plan shall be used only in locations where there will be traffic on one side of the temporary crash cushion array.
4. If the fixed object or approach end of the temporary railing is less than 15'-0" from the edge of traveled way, a temporary crash cushion is required in a construction or work zone.
5. Temporary crash cushion arrays shall not encroach on the traveled way.
6. Arrays for median shoulders shall conform to details shown on this plan for outside shoulders.
7. Place the Type P marker panel so that the bottom of the panel rests upon the pallet and faces traffic.
8. Refer to Standard Plan A73B for marker details.
9. For shoulder widths less than 8'-0", appropriate approved crash cushion protection, other than sand filled modules, shall be provided at fixed objects and at approach ends of temporary railing. The specific type of crash cushion shall be as shown on the project plans or as specified in the Special Provisions, or if not shown on the project plans or specified in the Special Provisions, shall be as approved by the Engineer.
10. Approach speeds indicated conform to NCHRP 350 Report criteria.
11. Use of pallets is optional.

STATE OF CALIFORNIA
DEPARTMENT OF TRANSPORTATION

TEMPORARY CRASH CUSHION, SAND FILLED (SHOULDER INSTALLATIONS)

NO SCALE

RSP T2 DATED JUNE 6, 2008 SUPERSEDES STANDARD PLAN T2
DATED MAY 1, 2006 - PAGE 213 OF THE STANDARD PLANS BOOK DATED MAY 2006.

REVISED STANDARD PLAN RSP T2

2006 REVISED STANDARD PLAN RSP T2

5-15-08

DIST	COUNTY	ROUTE	POST MILES TOTAL PROJECT	SHEET NO.	TOTAL SHEETS
03	But	70	R28.8/41.0	37	37

REGISTERED CIVIL ENGINEER

November 17, 2006
PLANS APPROVAL DATE

REGISTERED PROFESSIONAL ENGINEER — Greg W. Edwards — No. C36386 — Exp. 6-30-08 — CIVIL — STATE OF CALIFORNIA

The State of California or its officers or agents shall not be responsible for the accuracy or completeness of electronic copies of this plan sheet.

To accompany plans dated July 26, 2010

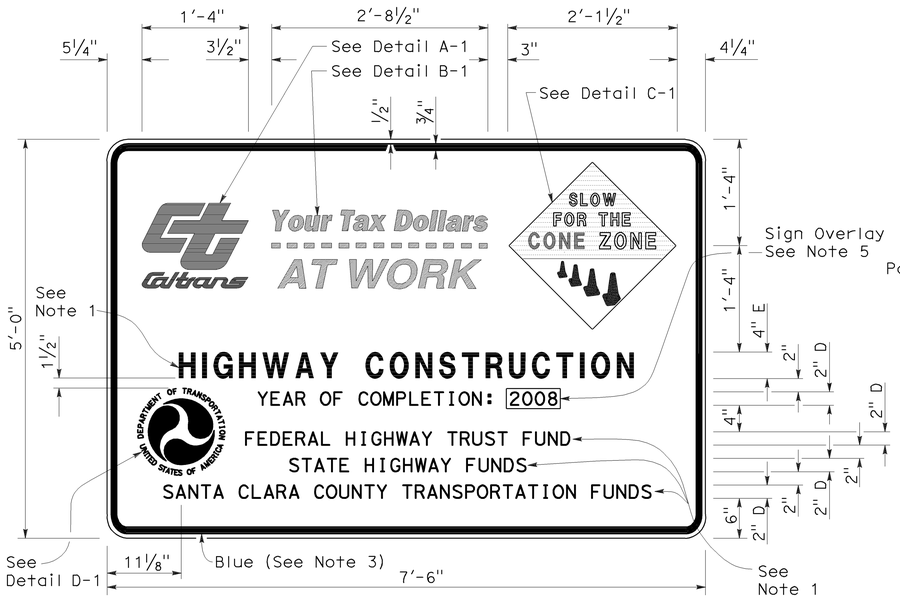

TYPE 1

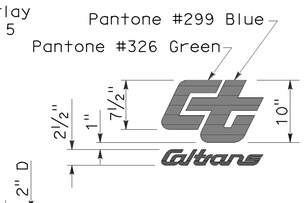

DETAIL A-1

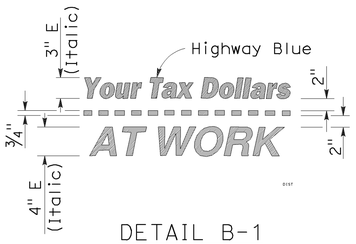

DETAIL B-1
(See Note 3)

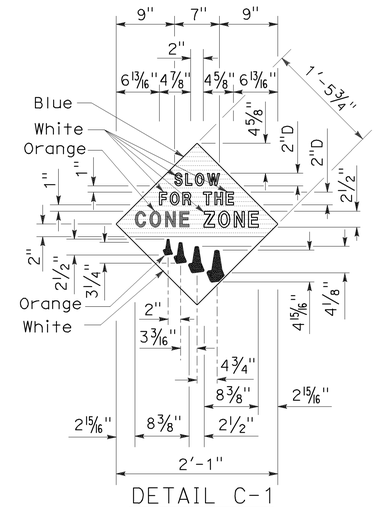

DETAIL C-1
(See Note 4)

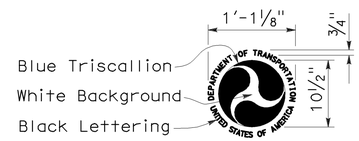

DETAIL D-1
(See Note 6)

NOTES:

1. The sign messages shown for type of project and fund types are examples only. See the Special Provisions for the applicable type of project and fund type messages to be used.
2. Except as otherwise shown, the legend of sign shall be black on a white background (non-reflective).
3. The border of the signs and details "B-1" and "B-2" shall be blue (non-reflective).
4. The diamond in details "C-1" and "C-2" shall be blue for the background of message, " SLOW FOR THE CONE ZONE", and white background for the orange cones. The color and type of font for the "SLOW FOR THE CONE ZONE" message shall be: "SLOW" white D; "FOR THE" white D; "CONE" orange Arial font; "ZONE" white Arial font.
5. Year of completion of project construction shown on the overlay is an example only. See the Special Provisions.
6. Use when the Project involves Federal Highway Trust Fund.

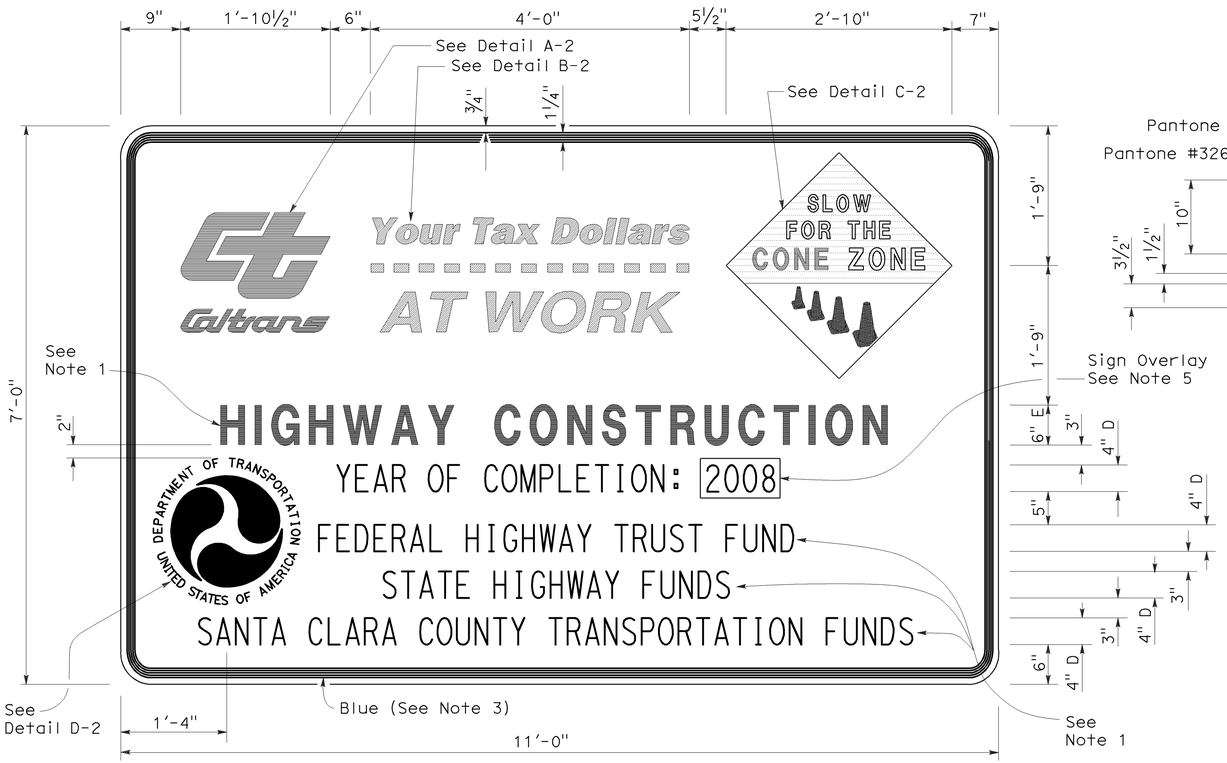

TYPE 2

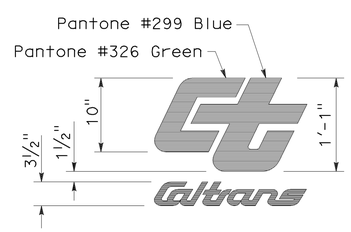

DETAIL A-2

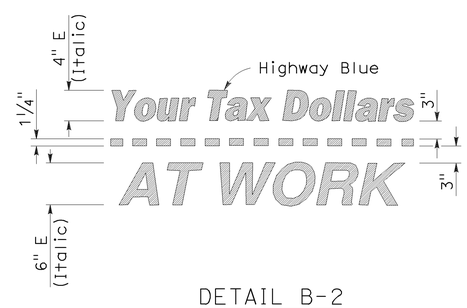

DETAIL B-2
(See Note 3)

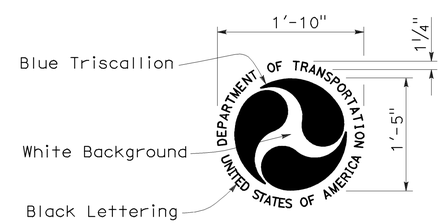

DETAIL D-2
(See Note 6)

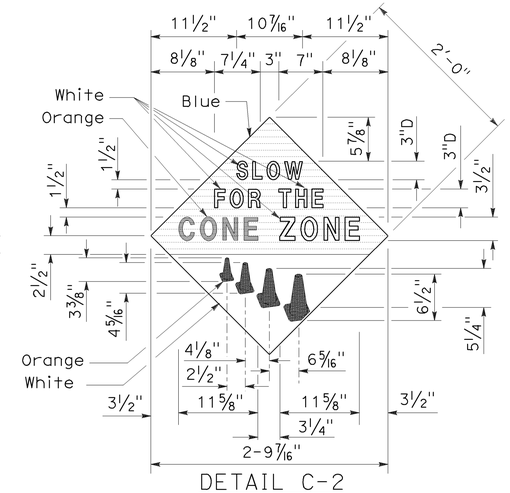

DETAIL C-2
(See Note 4)

STATE OF CALIFORNIA
DEPARTMENT OF TRANSPORTATION

CONSTRUCTION PROJECT FUNDING IDENTIFICATION SIGNS

NO SCALE

RSP T7 DATED NOVEMBER 17, 2006 SUPERSEDES STANDARD PLAN T7
DATED MAY 1, 2006 - PAGE 217 OF THE STANDARD PLANS BOOK DATED MAY 2006.

REVISED STANDARD PLAN RSP T7

2006 REVISED STANDARD PLAN RSP T7

9-7-06