Dist	COUNTY	ROUTE	POST MILES TOTAL PROJECT	SHEET No.	TOTAL SHEETS
02	Plu	36	6.5/9.2	1	23

INDEX OF PLANS

SHEET No.	DESCRIPTION
1	TITLE
2-4	TYPICAL CROSS SECTIONS
5,6	LAYOUTS
7,8	CONSTRUCTION DETAILS
9	CONSTRUCTION AREA SIGNS
10	PAVEMENT DELINEATION DETAILS
11	PAVEMENT DELINEATION QUANTITIES
12,13	SUMMARY OF QUANTITIES
14	TRAFFIC MONITORING STATION
15-23	NEW AND REVISED STANDARD PLANS

THE STANDARD PLANS LIST APPLICABLE TO THIS CONTRACT IS INCLUDED IN THE NOTICE TO BIDDERS AND SPECIAL PROVISIONS BOOK.

STATE OF CALIFORNIA

DEPARTMENT OF TRANSPORTATION

PROJECT PLANS FOR CONSTRUCTION ON

STATE HIGHWAY

IN PLUMAS COUNTY AT CHESTER FROM 0.2 MILE EAST OF ROUTE 89 TO MELISSA AVENUE

TO BE SUPPLEMENTED BY STANDARD PLANS DATED MAY 2006

LOCATION MAP

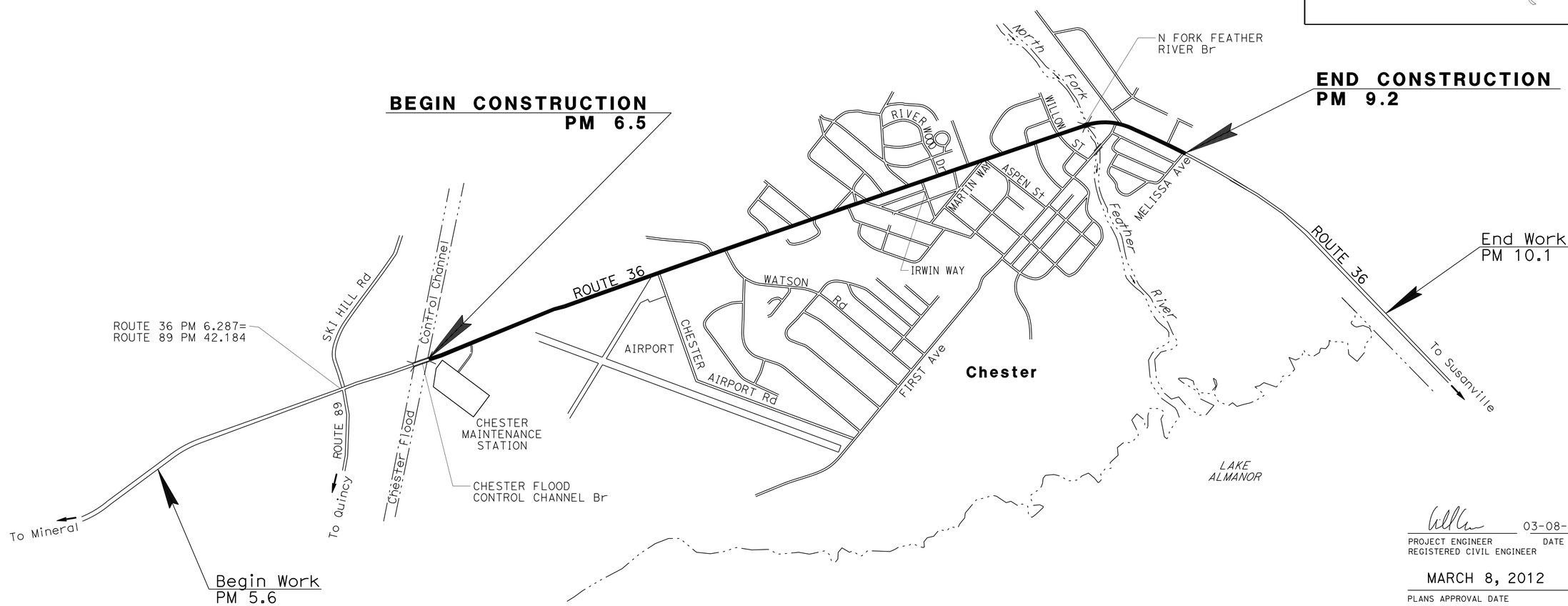

THE CONTRACTOR SHALL POSSESS THE CLASS (OR CLASSES) OF LICENSE AS SPECIFIED IN THE "NOTICE TO BIDDERS."

NO SCALE

03-08-12
PROJECT ENGINEER DATE
REGISTERED CIVIL ENGINEER

MARCH 8, 2012
PLANS APPROVAL DATE

REGISTERED PROFESSIONAL ENGINEER MICHAEL A. CONNER No. C73123 Exp. 12-31-12 CIVIL STATE OF CALIFORNIA

THE STATE OF CALIFORNIA OR ITS OFFICERS OR AGENTS SHALL NOT BE RESPONSIBLE FOR THE ACCURACY OR COMPLETENESS OF SCANNED COPIES OF THIS PLAN SHEET.

CONTRACT No.	02-5E2104
PROJECT ID	0212000094

PROJECT MANAGER: LANCE BROWN
DESIGN ENGINEER: LANCE BROWN

P:\proj1\02\5E2104_plans\pse\25e210ab001.dgn

LAST REVISION 03-08-12 | DATE PLOTTED => 13-MAR-2012 | TIME PLOTTED => 10:59

Dist	COUNTY	ROUTE	POST MILES TOTAL PROJECT	SHEET No.	TOTAL SHEETS
02	Plu	36	6.5/9.2	2	23

REGISTERED CIVIL ENGINEER 03-08-12 DATE

03-08-12
PLANS APPROVAL DATE

REGISTERED PROFESSIONAL ENGINEER MICHAEL A. CONNER No. C73123 Exp. 12-31-12 CIVIL STATE OF CALIFORNIA

THE STATE OF CALIFORNIA OR ITS OFFICERS OR AGENTS SHALL NOT BE RESPONSIBLE FOR THE ACCURACY OR COMPLETENESS OF SCANNED COPIES OF THIS PLAN SHEET.

NOTES:

1. DIMENSIONS OF THE STRUCTURAL SECTIONS ARE SUBJECT TO TOLERANCES SPECIFIED IN THE STANDARD SPECIFICATIONS.
2. SUPERELEVATIONS AS SHOWN OR AS DIRECTED BY THE ENGINEER.
3. EXISTING UTILITY FACILITIES HAVE NOT BEEN PLOTTED ON THESE PLANS.
4. FOR ACCURATE RIGHT OF WAY DATA, CONTACT RIGHT OF WAY ENGINEERING AT THE DISTRICT OFFICE.

LEGEND:

COLD PLANE ASPHALT CONCRETE PAVEMENT (0.00′ TO 0.25′)

ABBREVIATIONS:

CIR	COLD IN-PLACE RECYCLING
COLD PLANE	COLD PLANE ASPHALT CONCRETE PAVEMENT

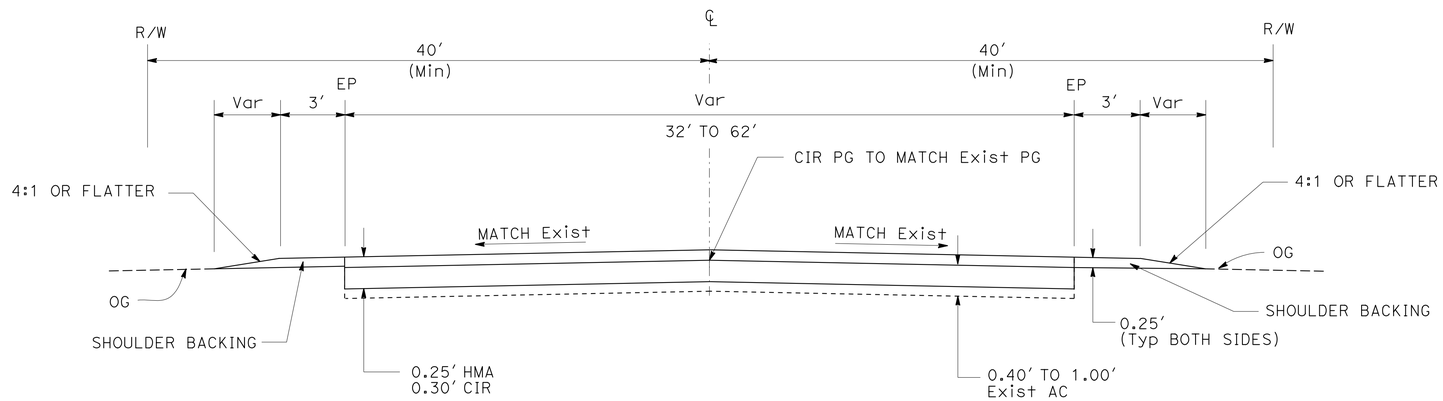

PM 6.53/7.69

TYPICAL CROSS SECTIONS

NO SCALE

X-1

REVISED BY	DATE REVISED

CALCULATED-DESIGNED BY: MICHAEL CONNER
CHECKED BY: KARLIE SMITH

FUNCTIONAL SUPERVISOR: LANCE BROWN

STATE OF CALIFORNIA - DEPARTMENT OF TRANSPORTATION
Caltrans® MAINTENANCE

P:\proj1\02\5E210_plans\pse\25e210ca001.dgn

LAST REVISION 03-08-12 | DATE PLOTTED => 13-MAR-2012 | TIME PLOTTED => 10:59

Dist	COUNTY	ROUTE	POST MILES TOTAL PROJECT	SHEET No.	TOTAL SHEETS
02	Plu	36	6.5/9.2	3	23

REGISTERED CIVIL ENGINEER 03-08-12 DATE

03-08-12
PLANS APPROVAL DATE

REGISTERED PROFESSIONAL ENGINEER MICHAEL A. CONNER No. C73123 Exp. 12-31-12 CIVIL STATE OF CALIFORNIA

THE STATE OF CALIFORNIA OR ITS OFFICERS OR AGENTS SHALL NOT BE RESPONSIBLE FOR THE ACCURACY OR COMPLETENESS OF SCANNED COPIES OF THIS PLAN SHEET.

NOTE:

1. EXISTING UTILITY FACILITIES HAVE NOT BEEN PLOTTED ON THESE PLANS.

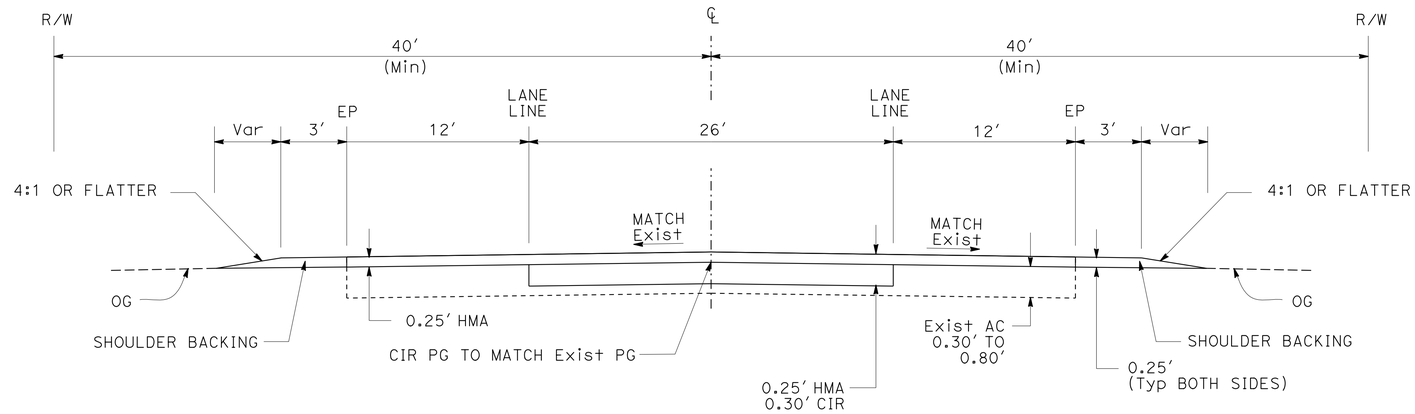

PM 7.94/7.98

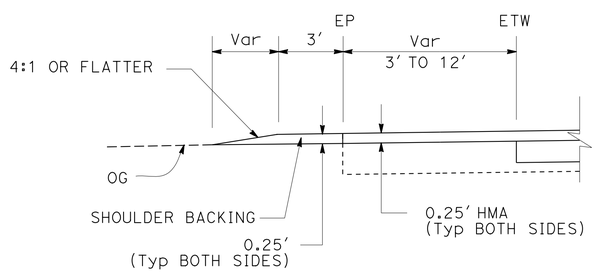

(Var Loc-BOTH DIRECTIONS)
PM 7.69/7.94
PM 7.98/8.75

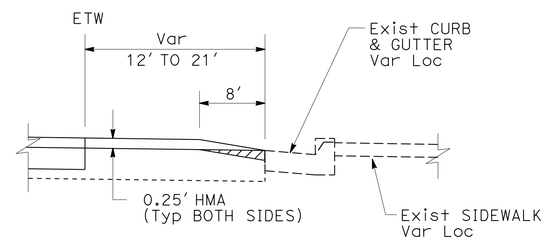

(Var Loc-BOTH DIRECTIONS)
PM 7.69/7.94
PM 7.98/8.75

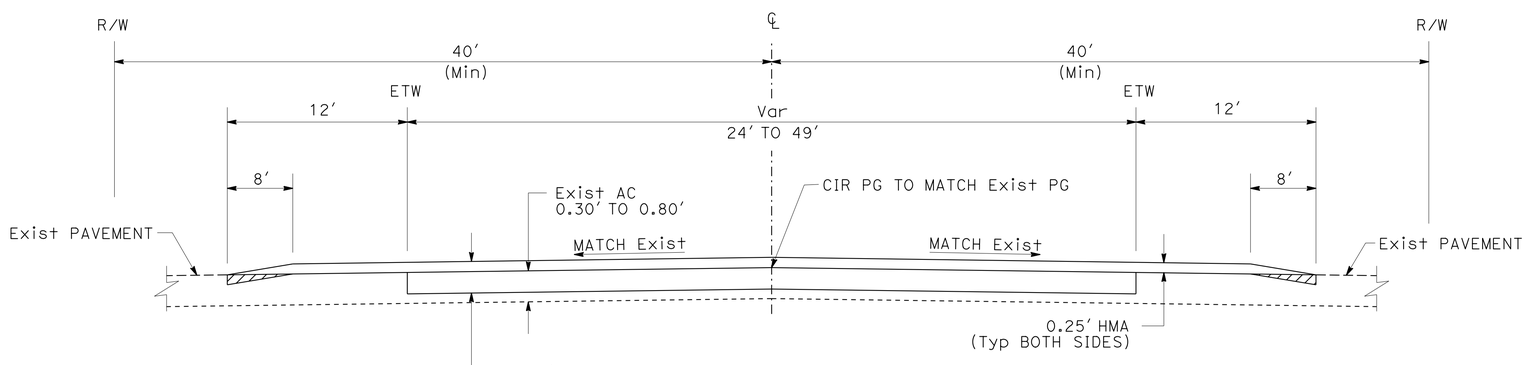

PM 7.69/7.94
7.98/8.75

TYPICAL CROSS SECTIONS

NO SCALE

X-2

REVISED BY | DATE REVISED
MICHAEL CONNER | KARLIE SMITH
CALCULATED-DESIGNED BY | CHECKED BY
FUNCTIONAL SUPERVISOR | LANCE BROWN

STATE OF CALIFORNIA - DEPARTMENT OF TRANSPORTATION
Caltrans® MAINTENANCE

P:\proj\02\5E210_plans\pse\25e210ca002.dgn

LAST REVISION | DATE PLOTTED => 13-MAR-2012
03-08-12 | TIME PLOTTED => 10:59

Dist	COUNTY	ROUTE	POST MILES TOTAL PROJECT	SHEET No.	TOTAL SHEETS
02	Plu	36	6.5/9.2	4	23

REGISTERED CIVIL ENGINEER 03-08-12 DATE

03-08-12
PLANS APPROVAL DATE

REGISTERED PROFESSIONAL ENGINEER MICHAEL A. CONNER No. C73123 Exp. 12-31-12 CIVIL STATE OF CALIFORNIA

THE STATE OF CALIFORNIA OR ITS OFFICERS OR AGENTS SHALL NOT BE RESPONSIBLE FOR THE ACCURACY OR COMPLETENESS OF SCANNED COPIES OF THIS PLAN SHEET.

NOTES:

1. EXISTING UTILITY FACILITIES HAVE NOT BEEN PLOTTED ON THESE PLANS.
2. SEE SHEET L-2 FOR PAVEMENT STRATEGY FROM PM 8.84 TO 8.89.
3. BETWEEN PM 8.89 TO 9.25, COLD PLANE 0.25′ BEFORE CIR AND OVERLAY OPERATIONS.

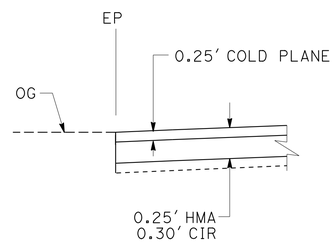

PM 9.18 Rt TO 9.25
PM 9.22 Lt TO 9.25

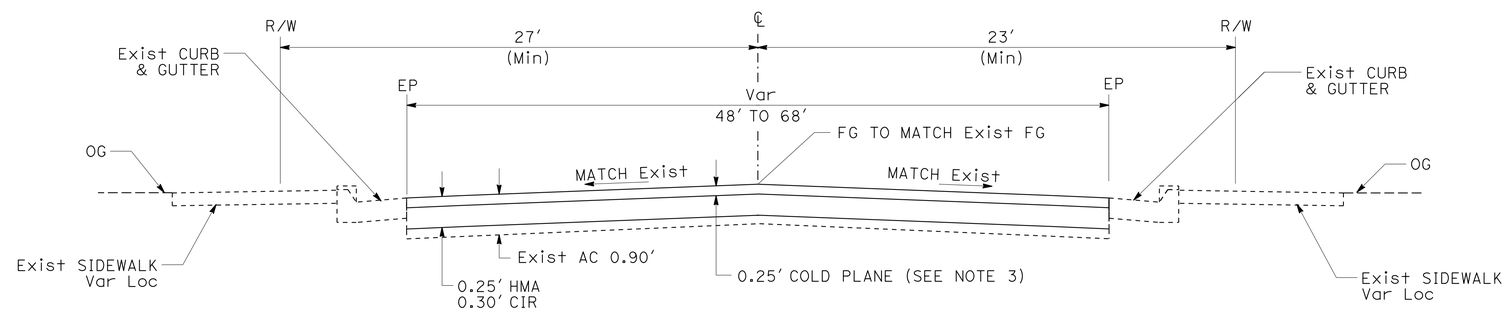

PM 8.89/9.25

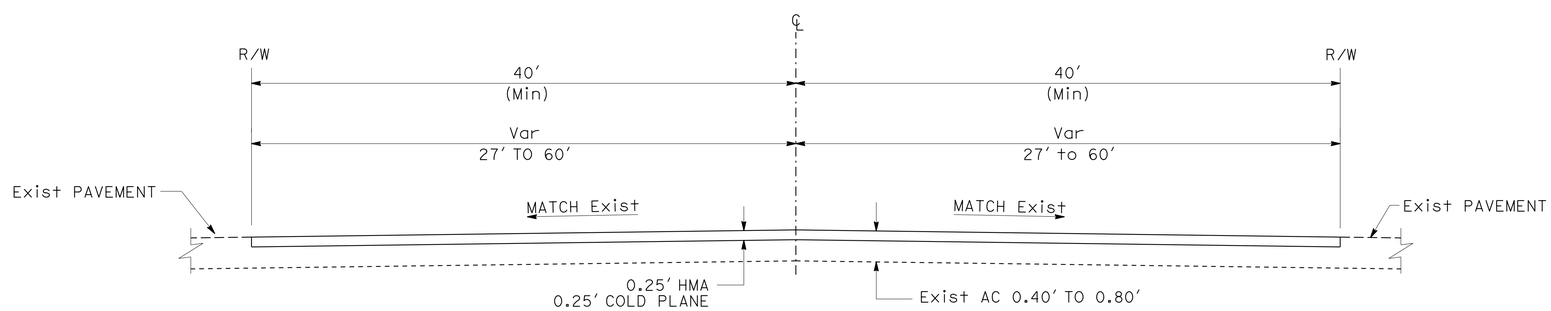

PM 8.75/8.84

TYPICAL CROSS SECTIONS

NO SCALE

X-3

REVISED BY	DATE REVISED

CALCULATED-DESIGNED BY	CHECKED BY
MICHAEL CONNER	KARLIE SMITH

FUNCTIONAL SUPERVISOR: LANCE BROWN

STATE OF CALIFORNIA - DEPARTMENT OF TRANSPORTATION
Caltrans MAINTENANCE

P:\proj1\02\5E210_plans\pse\25e210ca003.dgn

LAST REVISION 03-08-12 | DATE PLOTTED => 13-MAR-2012 | TIME PLOTTED => 10:59

Dist	COUNTY	ROUTE	POST MILES TOTAL PROJECT	SHEET No.	TOTAL SHEETS
02	Plu	36	6.5/9.2	5	23

REGISTERED CIVIL ENGINEER 03-08-12 DATE

03-08-12
PLANS APPROVAL DATE

REGISTERED PROFESSIONAL ENGINEER MICHAEL A. CONNER No. C73123 Exp. 12-31-12 CIVIL STATE OF CALIFORNIA

THE STATE OF CALIFORNIA OR ITS OFFICERS OR AGENTS SHALL NOT BE RESPONSIBLE FOR THE ACCURACY OR COMPLETENESS OF SCANNED COPIES OF THIS PLAN SHEET.

NOTE:

1. FOR COMPLETE R/W DATA, SEE R/W RECORD MAPS AT DISTRICT OFFICE.

LEGEND:

- 0.25' HMA
  0.25' COLD PLANE ASPHALT CONCRETE PAVEMENT
- COLD PLANE ASPHALT CONCRETE PAVEMENT (0.00' TO 0.25')
- 0.50' HMA
  0.50' COLD PLANE ASPHALT CONCRETE PAVEMENT

ABBREVIATIONS:

CIR	COLD IN-PLACE RECYCLING
COLD PLANE	COLD PLANE ASPHALT CONCRETE PAVEMENT

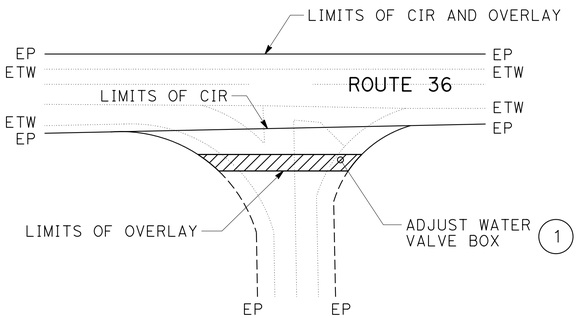

CHESTER AIRPORT Rd
PM 7.44

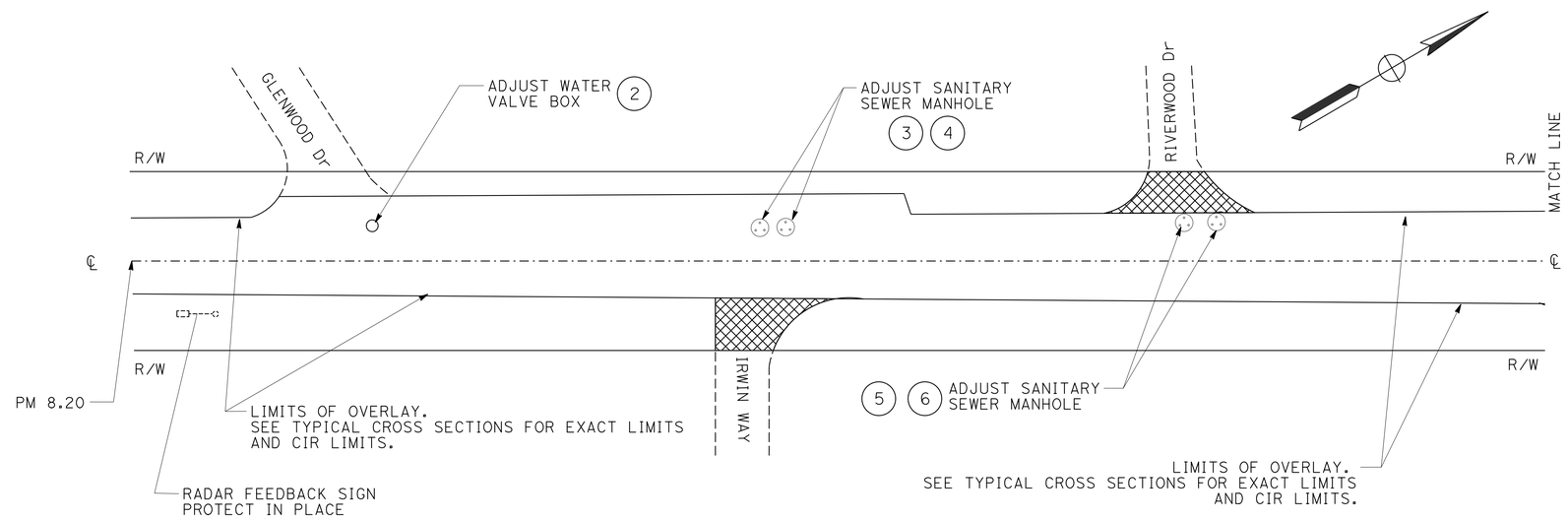

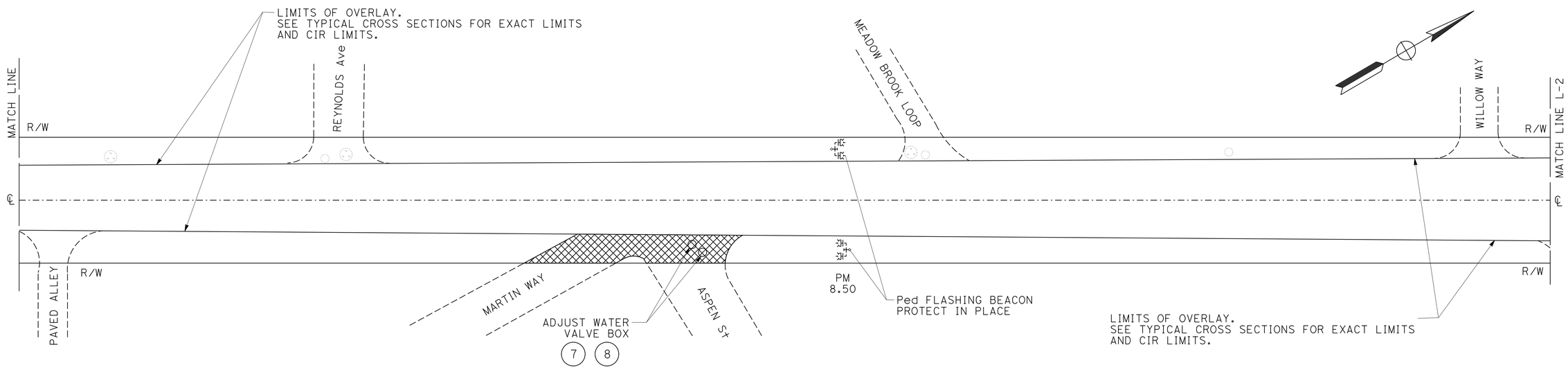

LAYOUT
NO SCALE

L-1

REVISED BY	DATE REVISED
MICHAEL CONNER	KARLIE SMITH
CALCULATED-DESIGNED BY	CHECKED BY
FUNCTIONAL SUPERVISOR	LANCE BROWN

STATE OF CALIFORNIA - DEPARTMENT OF TRANSPORTATION
Caltrans® MAINTENANCE

P:\proj1\02\5E210_plans\pse\25e210ea001.dgn

LAST REVISION 03-08-12 | DATE PLOTTED => 13-MAR-2012 TIME PLOTTED => 10:59

Dist	COUNTY	ROUTE	POST MILES TOTAL PROJECT	SHEET No.	TOTAL SHEETS
02	Plu	36	6.5/9.2	6	23

REGISTERED CIVIL ENGINEER 03-08-12 DATE

PLANS APPROVAL DATE 03-08-12

REGISTERED PROFESSIONAL ENGINEER MICHAEL A. CONNER No. C73123 Exp. 12-31-12 CIVIL STATE OF CALIFORNIA

THE STATE OF CALIFORNIA OR ITS OFFICERS OR AGENTS SHALL NOT BE RESPONSIBLE FOR THE ACCURACY OR COMPLETENESS OF SCANNED COPIES OF THIS PLAN SHEET.

NOTE:

1. FOR COMPLETE R/W DATA, SEE R/W RECORD MAPS AT DISTRICT OFFICE.

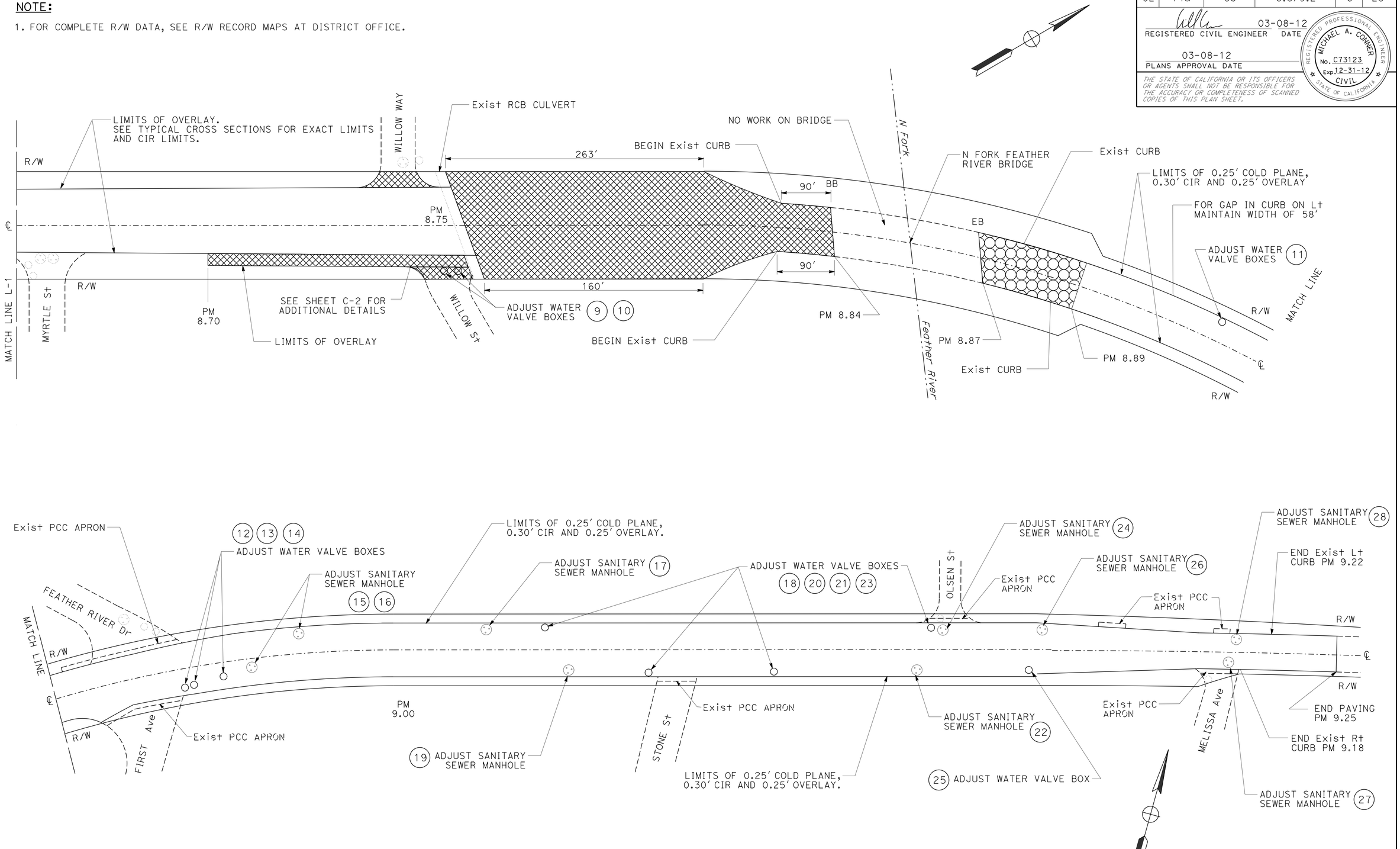

LAYOUT
NO SCALE

L-2

REVISED BY	DATE REVISED

CALCULATED-DESIGNED BY	CHECKED BY
MICHAEL CONNER	KARLIE SMITH

FUNCTIONAL SUPERVISOR: LANCE BROWN

STATE OF CALIFORNIA - DEPARTMENT OF TRANSPORTATION

Caltrans® **MAINTENANCE**

P:\proj1\02\5E210_plans\pse\25e210ea002.dgn

LAST REVISION 03-08-12 | DATE PLOTTED => 13-MAR-2012 | TIME PLOTTED => 10:59

Dist	COUNTY	ROUTE	POST MILES TOTAL PROJECT	SHEET No.	TOTAL SHEETS
02	Plu	36	6.5/9.2	7	23

REGISTERED CIVIL ENGINEER 03-08-12 DATE

03-08-12
PLANS APPROVAL DATE

REGISTERED PROFESSIONAL ENGINEER MICHAEL A. CONNER No. C73123 Exp. 12-31-12 CIVIL STATE OF CALIFORNIA

THE STATE OF CALIFORNIA OR ITS OFFICERS OR AGENTS SHALL NOT BE RESPONSIBLE FOR THE ACCURACY OR COMPLETENESS OF SCANNED COPIES OF THIS PLAN SHEET.

NOTE:

1. EXISTING UTILITY FACILITIES HAVE NOT BEEN PLOTTED ON THESE PLANS.

ABBREVIATIONS:

CIR	COLD IN-PLACE RECYCLING
COLD PLANE	COLD PLANE ASPHALT CONCRETE PAVEMENT

LEGEND:

- COLD PLANE ASPHALT CONCRETE PAVEMENT (0.00' TO 0.25')
- 0.30' COLD IN-PLACE RECYCLING 0.25' HMA
- 0.25' HMA 0.25' COLD PLANE ASPALT CONCRETE PAVEMENT

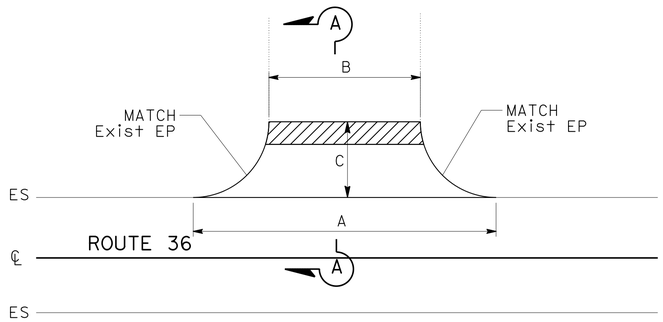

ROAD CONNECTIONS - CASE A

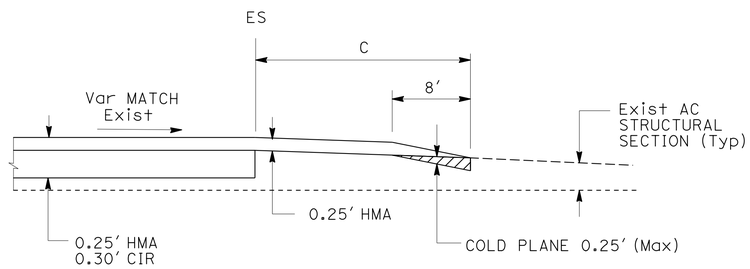

SECTION A-A

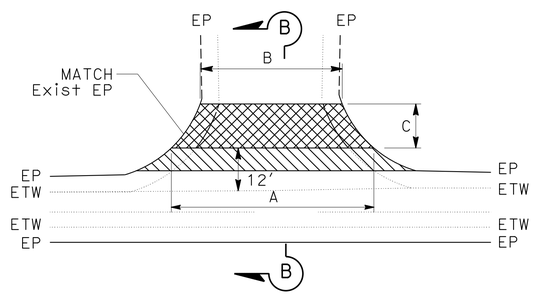

ROAD CONNECTIONS - CASE B

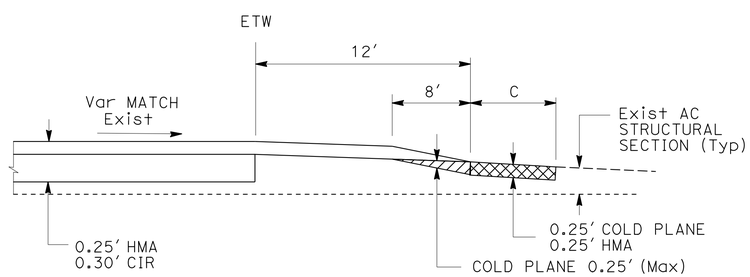

SECTION B-B

ROAD CONNECTIONS

ROAD CONNECTION	SIDE	POST MILE	DIMENSIONS (LF) A	B	C	CASE
CHESTER MAINTENANCE STATION	R†	6.62	102	26	65	A
DRIVEWAY	L†	6.65	161	119	8	A
COUNTY MAINTENANCE YARD	R†	6.85	138	95	8	A
DRIVEWAY	R†	6.86	93	47	8	A
DRIVEWAY	L†	7.09	116	75	8	A
CHESTER RANGER STATION	R†	7.18	346	74	25	A
CHESTER RANGER STATION	L†	7.18	179	63	20	A
CHESTER RANGER STATION	L†	7.23	180	53	20	A
CHESTER AIRPORT Rd	R†	7.44	156	78	18	A
DRIVEWAY	R†	7.51	115	84	8	A
DRIVEWAY	R†	7.55	55	27	8	A
WATSON Rd	R†	7.58	118	71	10	A
DRIVEWAY	L†	7.58	128	86	8	A
DRIVEWAY	L†	7.67	93	67	8	A
CAROL Ave	L†	7.77	110	65	14	B
NANCY Ave	L†	7.84	132	80	14	B
JENSEN Rd	L†	7.91	75	47	19	B
IRWIN WAY	R†	8.28	88	54	21	B
RIVERWOOD Dr	L†	8.34	92	56	12	B
MARTIN WAY/ASPEN St	R†	8.48	241	211	20	B
WILLOW St	R†	8.75	55	54	23	*
WILLOW WAY	L†	8.75	99	45	24	B

*SEE DETAIL ON SHEET L-2 AND C-2

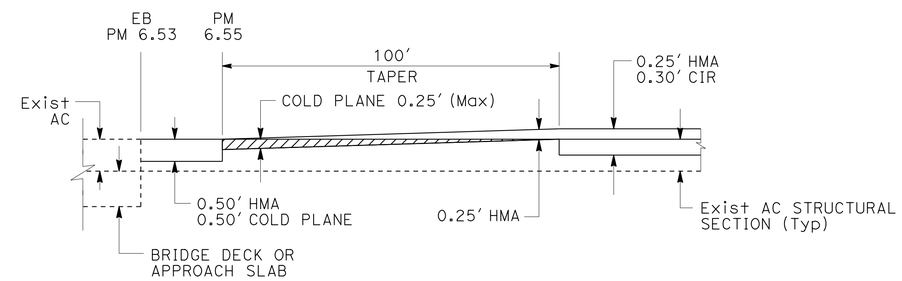

MAINLINE CONFORM TAPER AT BEGIN

PM 6.53

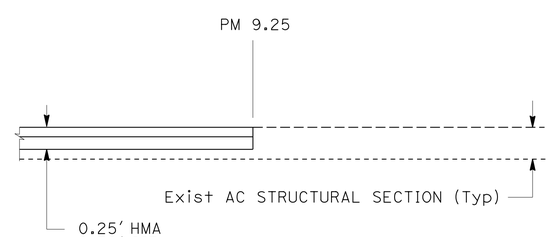

MAINLINE CONFORM AT END

PM 9.25

CONSTRUCTION DETAILS

NO SCALE

C-1

MICHAEL CONNER — REVISED BY
KARLIE SMITH — DATE REVISED
CALCULATED-DESIGNED BY
CHECKED BY
LANCE BROWN — FUNCTIONAL SUPERVISOR

STATE OF CALIFORNIA - DEPARTMENT OF TRANSPORTATION
Caltrans® MAINTENANCE

P:\proj1\02\5E210_plans\pse\25e210ga001.dgn

LAST REVISION DATE PLOTTED => 13-MAR-2012
03-08-12 TIME PLOTTED => 10:59

Dist	COUNTY	ROUTE	POST MILES TOTAL PROJECT	SHEET No.	TOTAL SHEETS
02	Plu	36	6.5/9.2	8	23

REGISTERED CIVIL ENGINEER 03-08-12 DATE

03-08-12
PLANS APPROVAL DATE

REGISTERED PROFESSIONAL ENGINEER MICHAEL A. CONNER No. C73123 Exp. 12-31-12 CIVIL STATE OF CALIFORNIA

THE STATE OF CALIFORNIA OR ITS OFFICERS OR AGENTS SHALL NOT BE RESPONSIBLE FOR THE ACCURACY OR COMPLETENESS OF SCANNED COPIES OF THIS PLAN SHEET.

NOTE:

1. EXISTING UTILITY FACILITIES HAVE NOT BEEN PLOTTED ON THESE PLANS.

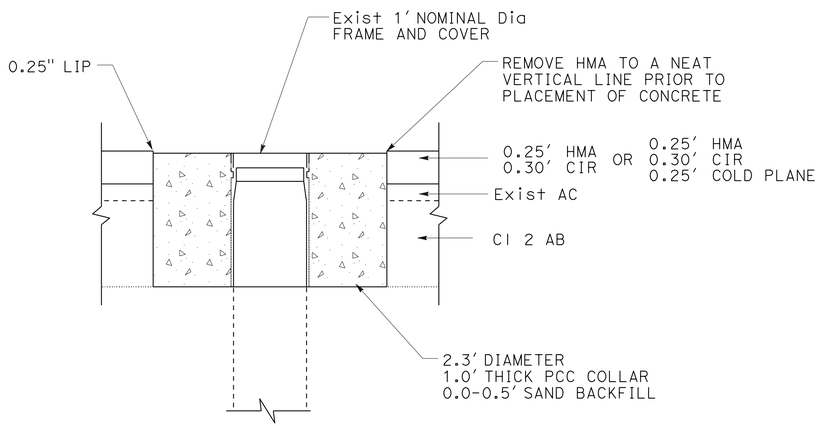

ADJUST WATER VALVE BOX DETAIL

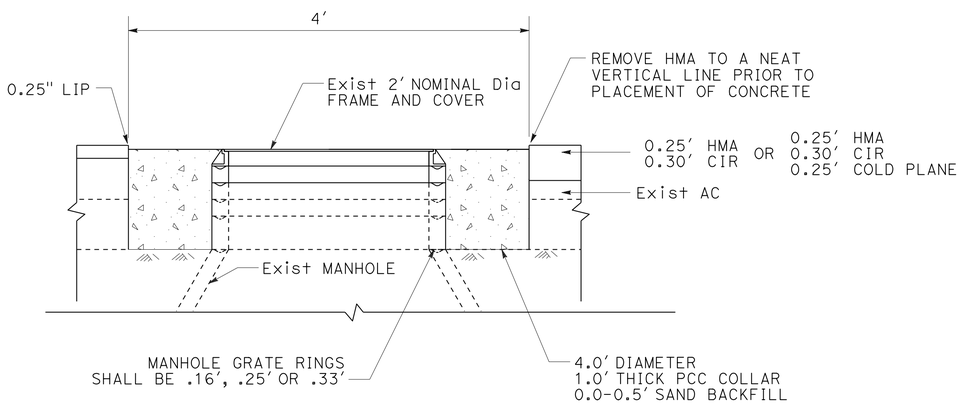

ADJUST SANITARY SEWER MANHOLE DETAIL

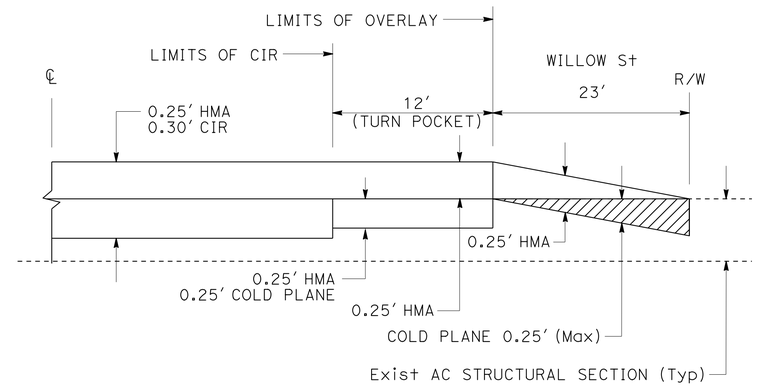

TURN POCKET DETAIL/WILLOW St

PM 8.70 TO PM 8.75

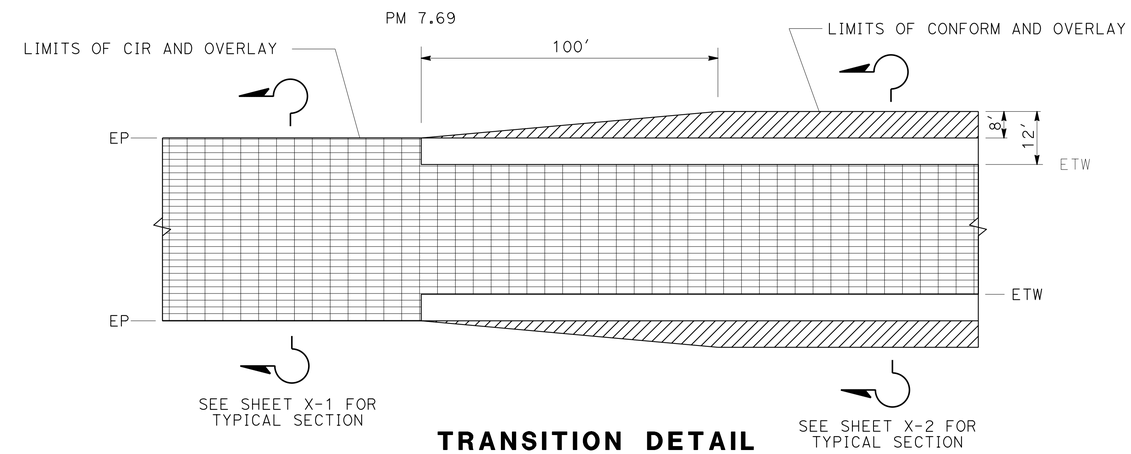

TRANSITION DETAIL

PM 7.69

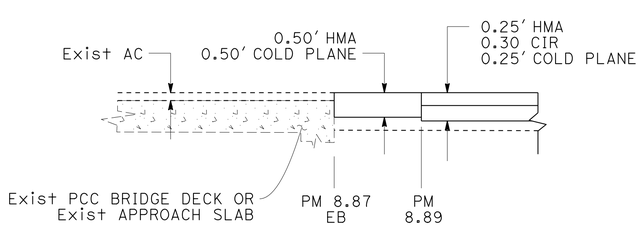

MAINLINE CONFORM TAPER

PM 8.87

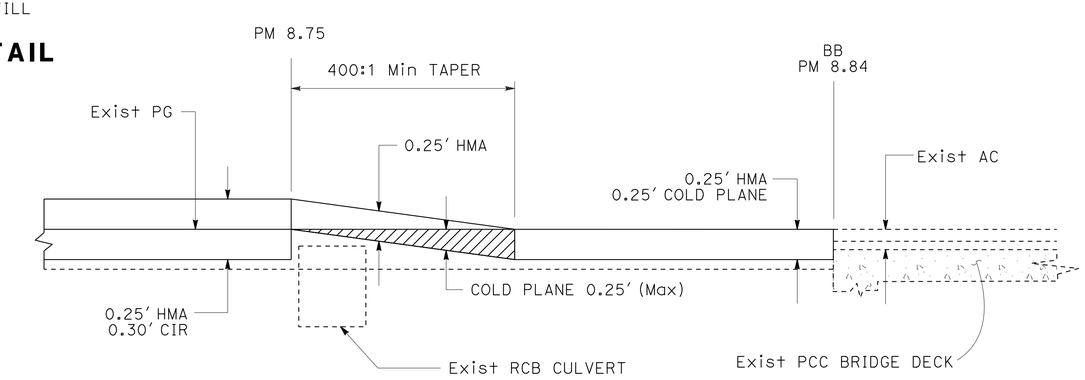

TRANSITION DETAIL

PM 8.75

CONSTRUCTION DETAILS

NO SCALE

C-2

STATE OF CALIFORNIA - DEPARTMENT OF TRANSPORTATION
Caltrans® MAINTENANCE

FUNCTIONAL SUPERVISOR: LANCE BROWN
MICHAEL CONNER | KARLIE SMITH
CALCULATED-DESIGNED BY | CHECKED BY
REVISED BY | DATE REVISED

P:\proj1\02\5E210_plans\pse\25e210ga002.dgn

LAST REVISION | DATE PLOTTED => 13-MAR-2012 | TIME PLOTTED => 10:59
03-08-12

Dist	COUNTY	ROUTE	POST MILES TOTAL PROJECT	SHEET No.	TOTAL SHEETS
02	Plu	36	6.5/9.2	9	23

REGISTERED CIVIL ENGINEER 03-08-12 DATE

03-08-12
PLANS APPROVAL DATE

REGISTERED PROFESSIONAL ENGINEER MICHAEL A. CONNER No. C73123 Exp. 12-31-12 CIVIL STATE OF CALIFORNIA

THE STATE OF CALIFORNIA OR ITS OFFICERS OR AGENTS SHALL NOT BE RESPONSIBLE FOR THE ACCURACY OR COMPLETENESS OF SCANNED COPIES OF THIS PLAN SHEET.

NOTES:

1. EXACT LOCATION OF ALL SIGNS TO BE DETERMINED BY THE ENGINEER.
2. CALIFORNIA CODES ARE DESIGNATED BY (CA), OTHERWISE FEDERAL CODES ARE SHOWN.
3. EXISTING UTILITY FACILITIES HAVE NOT BEEN PLOTTED ON THESE PLANS.

LEGEND:

ONE POST STATIONARY MOUNTED SIGN

DIRECTION OF TRAFFIC

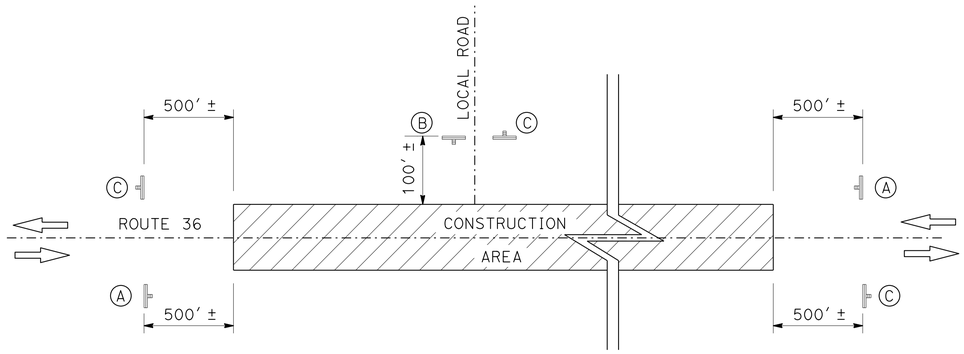

CONSTRUCTION AREA SIGNS (STATIONARY MOUNTED)

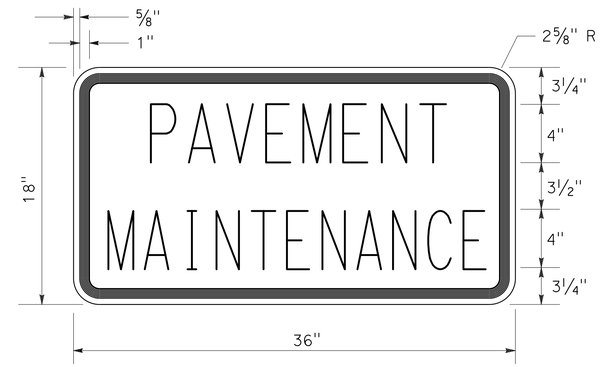

C23B(CA) SIGN PANEL DETAIL

CONSTRUCTION AREA SIGNS (STATIONARY MOUNTED)

TYPE	CODE	PANEL SIZE	SIGN MESSAGE	NUMBER AND SIZE OF POST	No. OF SIGNS
A	W20-1 C23B(CA)	48" x 48" 36" x 18"	ROAD WORK AHEAD PAVEMENT MAINTENANCE	1-4" x 6"	2
B	W20-1	48" x 48"	ROAD WORK AHEAD	1-4" x 6"	32
C	G20-2	36" x 18"	END ROAD WORK	1-4" x 4"	5

ROAD CONNECTIONS

PM	DESCRIPTION	B	C
6.62	CHESTER MAINTENANCE STATION	R†	
6.85	COUNTY MAINTENANCE YARD	R†	
7.18	CHESTER RANGER STATION	R† & L†	
7.23	CHESTER RANGER STATION	L†	
7.44	CHESTER AIRPORT Rd	R†	R†
7.58	WATSON Rd	R†	
7.77	CAROL Ave	L†	
7.84	NANCY Ave	L†	
7.91	JENSEN Rd	L†	
7.94	ALDON Dr	R†	
8.03	FARRAR Dr	R†	
8.07	CHATEAU WAY	L†	
8.09	FIRST St	R†	
8.15	COLLINS Dr	L†	
8.24	GLENWOOD Dr	L†	
8.28	IRWIN WAY	R†	
8.34	RIVERWOOD Dr	L†	
8.39	PAVED ALLEY	R†	
8.44	REYNOLDS Ave	L†	
8.48	MARTIN WAY	R†	R†
8.48	ASPEN St	R†	R†
8.54	MEADOW BROOK LOOP	L†	
8.64	WILLOW WAY	L†	
8.67	MYRTLE St	R†	
8.75	WILLOW St	R†	
8.75	WILLOW WAY	L†	
8.95	FIRST Ave	R†	
8.95	FEATHER RIVER Dr	L†	
9.06	STONE St	R†	
9.12	OLSEN St	L†	
9.18	MELISSA Ave	R†	

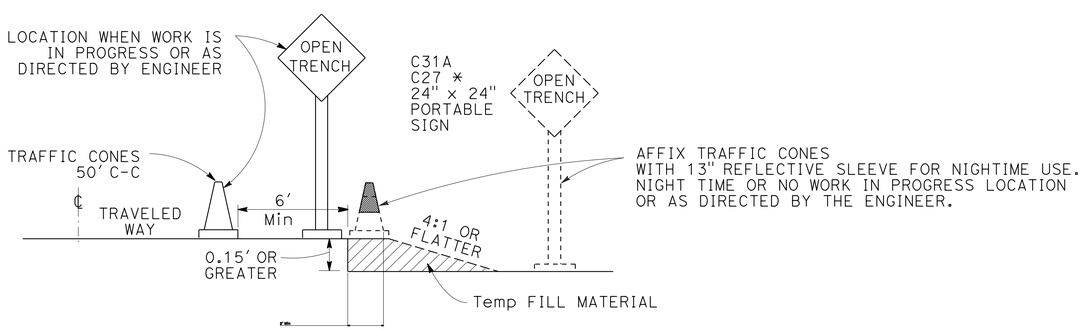

OPEN TRENCH SIGNING AND MARKING

NO SCALE

* PLACE AT 250′ INTERVALS THROUGH THE OPEN TRENCH AREA, ALTERNATE C27 (OPEN TRENCH) AND C31A (NO SHOULDER) SIGNS

CONSTRUCTION AREA SIGNS

NO SCALE

CS-1

REVISED BY	DATE REVISED

CALCULATED-DESIGNED BY: MICHAEL CONNER
CHECKED BY: KARLIE SMITH
FUNCTIONAL SUPERVISOR: LANCE BROWN

STATE OF CALIFORNIA - DEPARTMENT OF TRANSPORTATION
Caltrans® MAINTENANCE

P:\proj1\02\5E210_plans\pse\25e2101a001.dgn

LAST REVISION 03-08-12 | DATE PLOTTED => 13-MAR-2012 | TIME PLOTTED => 10:59

Dist	COUNTY	ROUTE	POST MILES TOTAL PROJECT	SHEET No.	TOTAL SHEETS
02	Plu	36	6.5/9.2	10	23

REGISTERED CIVIL ENGINEER 03-08-12 DATE

03-08-12
PLANS APPROVAL DATE

REGISTERED PROFESSIONAL ENGINEER MICHAEL A. CONNER No. C73123 Exp. 12-31-12 CIVIL STATE OF CALIFORNIA

THE STATE OF CALIFORNIA OR ITS OFFICERS OR AGENTS SHALL NOT BE RESPONSIBLE FOR THE ACCURACY OR COMPLETENESS OF SCANNED COPIES OF THIS PLAN SHEET.

LEGEND:

Dir OF TRAFFIC

XXX TRAFFIC STRIPE DETAIL No.

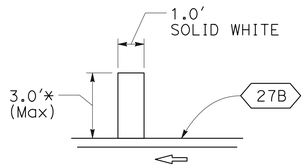

DETAIL A

* ACTUAL LENGTH MAY VARY DUE TO PAVEMENT WIDTH

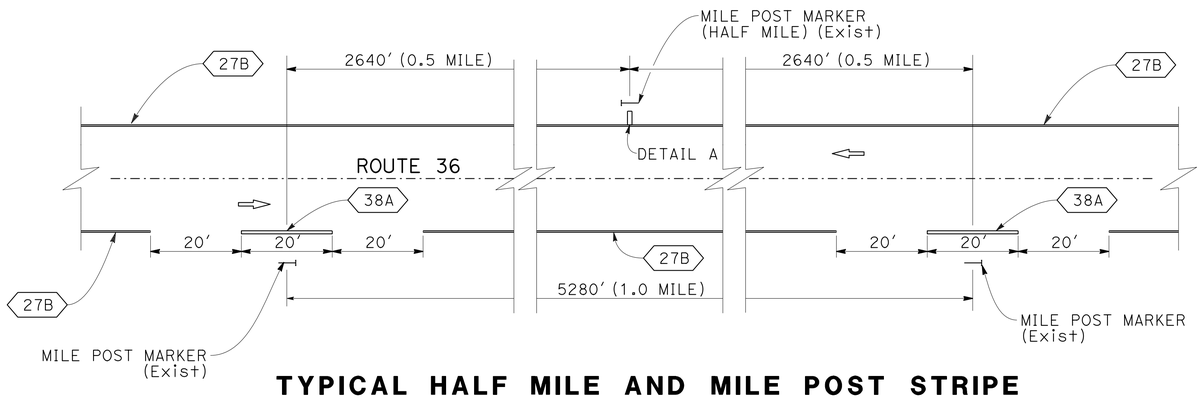

TYPICAL HALF MILE AND MILE POST STRIPE

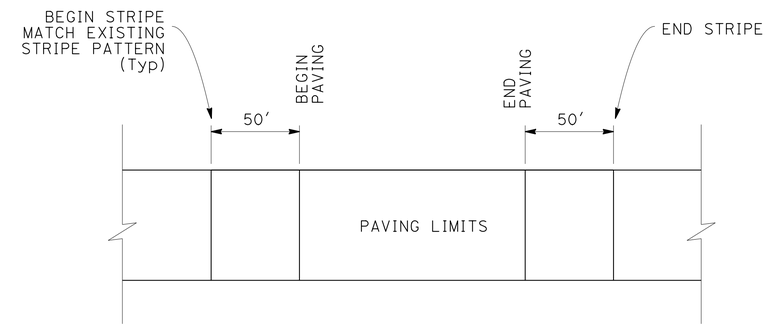

TRAFFIC STRIPE MATCH DETAIL

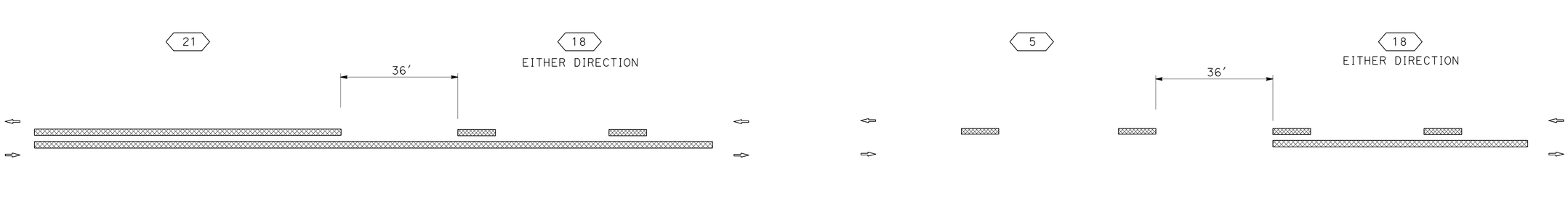

TYPICAL STRIPE TRANSITION DETAILS

PAVEMENT DELINEATION DETAILS

NO SCALE

PDD-1

STATE OF CALIFORNIA - DEPARTMENT OF TRANSPORTATION
Caltrans® MAINTENANCE

FUNCTIONAL SUPERVISOR: LANCE BROWN
CALCULATED-DESIGNED BY: MICHAEL CONNER
CHECKED BY: KARLIE SMITH
REVISED BY
DATE REVISED

P:\proj1\02\5E210_plans\pse\25e210nb001.dgn

LAST REVISION 03-08-12
DATE PLOTTED => 13-MAR-2012
TIME PLOTTED => 10:59

Dist	COUNTY	ROUTE	POST MILES TOTAL PROJECT	SHEET No.	TOTAL SHEETS
02	Plu	36	6.5/9.2	11	23

REGISTERED CIVIL ENGINEER 03-08-12 DATE

03-08-12
PLANS APPROVAL DATE

REGISTERED PROFESSIONAL ENGINEER MICHAEL A. CONNER No. C73123 Exp. 12-31-12 CIVIL STATE OF CALIFORNIA

THE STATE OF CALIFORNIA OR ITS OFFICERS OR AGENTS SHALL NOT BE RESPONSIBLE FOR THE ACCURACY OR COMPLETENESS OF SCANNED COPIES OF THIS PLAN SHEET.

THERMOPLASTIC PAVEMENT MARKING

PM	L+	Mid	R+	EA	SQFT	REMARKS
6.56			X	1	15.0	TYPE IV (R) ARROW
6.62			X	1	43.0	ROAD CONNECTION LIMIT LINE
6.62			X	1	22.0	STOP
6.85			X	1	35.0	ROAD CONNECTION LIMIT LINE
6.85			X	1	22.0	STOP
7.18			X	1	47.0	ROAD CONNECTION LIMIT LINE
7.18			X	1	22.0	STOP
7.18	X			1	43.0	ROAD CONNECTION LIMIT LINE
7.18	X			1	22.0	STOP
7.23	X			1	36.0	ROAD CONNECTION LIMIT LINE
7.23	X			1	22.0	STOP
7.29			X	1	15.0	TYPE IV (R) ARROW
7.37			X	1	15.0	TYPE IV (R) ARROW
7.44			X	1	33.0	ROAD CONNECTION LIMIT LINE
7.44			X	1	22.0	STOP
7.50	X			1	3.0	DETAIL A
7.55			X	1	15.0	TYPE IV (R) ARROW
7.58	X			1	39.0	ROAD CONNECTION LIMIT LINE
7.58	X			1	22.0	STOP
7.59	X			1	15.0	TYPE IV (L) ARROW
7.67	X			1	26.0	ROAD CONNECTION LIMIT LINE
7.67	X			1	22.0	STOP
7.77	X			1	47.0	ROAD CONNECTION LIMIT LINE
7.77	X			1	22.0	STOP
7.84	X			1	55.0	ROAD CONNECTION LIMIT LINE
7.84	X			1	22.0	STOP
7.91	X			1	34.0	ROAD CONNECTION LIMIT LINE
7.91	X			1	22.0	STOP
7.94			X	1	31.0	ROAD CONNECTION LIMIT LINE
7.94			X	1	22.0	STOP
8.03			X	1	39.0	ROAD CONNECTION LIMIT LINE
8.03			X	1	22.0	STOP
8.07	X			1	36.0	ROAD CONNECTION LIMIT LINE
8.07	X			1	22.0	STOP
8.09			X	1	64.0	ROAD CONNECTION LIMIT LINE
8.09			X	1	22.0	STOP
8.15	X			1	57.0	ROAD CONNECTION LIMIT LINE
8.15	X			1	22.0	STOP
8.24	X			1	42.0	TYPE VI ARROW
8.24			X	2	46.0	SLOW (YELLOW)
8.24			X	2	70.0	SCHOOL (YELLOW)
8.24	X			1	50.0	ROAD CONNECTION LIMIT LINE
8.24	X			1	22.0	STOP
8.25	X			1	42.0	TYPE VI ARROW
8.25			X	2	42.0	XING (YELLOW)
8.26	X			1	42.0	TYPE VI ARROW
8.28		X		1	190.0	CROSSWALK (YELLOW)
8.28			X	1	34.0	ROAD CONNECTION LIMIT LINE
8.28			X	1	22.0	STOP
8.31	X			2	42.0	XING (YELLOW)
8.32	X			2	70.0	SCHOOL (YELLOW)
8.33	X			2	46.0	SLOW (YELLOW)
8.34	X			1	30.0	ROAD CONNECTION LIMIT LINE
8.34	X			1	22.0	STOP
8.39			X	1	27.0	ROAD CONNECTION LIMIT LINE
8.39			X	1	22.0	STOP
8.41			X	2	46.0	SLOW (YELLOW)
8.42			X	2	36.0	PED (YELLOW)
8.43			X	2	42.0	XING (YELLOW)
SUBTOTAL 1					2080.0	

THERMOPLASTIC PAVEMENT MARKING (Cont)

PM	L+	Mid	R+	EA	SQFT	REMARKS
8.44	X			1	30.0	ROAD CONNECTION LIMIT LINE
8.44	X			1	22.0	STOP
8.48			X	1	48.0	ROAD CONNECTION LIMIT LINE
8.48			X	2	44.0	STOP
8.48		X	X	2	354.0	CROSSWALK (YELLOW)
8.50	X			1	3.0	DETAIL A
8.54	X			1	35.0	ROAD CONNECTION LIMIT LINE
8.54	X			1	22.0	STOP
8.58	X			2	42.0	XING (YELLOW)
8.59	X			2	36.0	PED (YELLOW)
8.60	X			2	46.0	SLOW (YELLOW)
8.64	X			1	26.0	ROAD CONNECTION LIMIT LINE
8.64	X			1	22.0	STOP
8.67			X	1	31.0	ROAD CONNECTION LIMIT LINE
8.67			X	1	22.0	STOP
8.72			X	1	15.0	TYPE IV (R) ARROW
8.72	X			1	33.0	TYPE V ARROW
8.75			X	1	15.0	TYPE IV (R) ARROW
8.75	X		X	2	63.0	ROAD CONNECTION LIMIT LINE
8.75	X		X	2	44.0	STOP
8.75		X		1	240.0	CROSSWALK
8.76			X	1	33.0	TYPE V ARROW
8.76	X			1	33.0	TYPE V ARROW
8.77			X	1	42.0	TYPE VI ARROW
8.79			X	1	42.0	TYPE VI ARROW
8.79	X			1	33.0	TYPE V ARROW
8.79			X	1	33.0	TYPE V ARROW
8.81			X	1	42.0	TYPE VI ARROW
8.89			X	1	23.0	SLOW (YELLOW)
8.91			X	1	35.0	SCHOOL (YELLOW)
8.92			X	1	21.0	XING (YELLOW)
8.93		X		1	15.0	TYPE IV (L) ARROW
8.95	X			1	34.0	ROAD CONNECTION LIMIT LINE
8.95	X		X	2	44.0	STOP
8.95		X	X	2	344.0	CROSSWALK (YELLOW)
8.98			X	2	30.0	TYPE IV (L) ARROW
9.00	X			1	21.0	XING (YELLOW)
9.01	X			1	35.0	SCHOOL (YELLOW)
9.02	X			1	23.0	SLOW
9.06			X	1	18.0	ROAD CONNECTION LIMIT LINE
9.06			X	1	22.0	STOP
9.10		X		2	30.0	TYPE IV (L) ARROW
9.12	X			1	17.0	ROAD CONNECTION LIMIT LINE
9.12	X			1	22.0	STOP
9.18			X	1	18.0	ROAD CONNECTION LIMIT LINE
9.18			X	1	22.0	STOP
SUBTOTAL 1					2080.0	
TOTAL					4305.0	

THERMOPLASTIC TRAFFIC STRIPE (SPRAYABLE)

PM-PM	DETAIL 5	DETAIL 11	DETAIL 18	DETAIL 21	DETAIL 27B	DETAIL 27C	DETAIL 28	DETAIL 31	DETAIL 38A
	LF	LF	LF	LF	LF	LF	LF	LF	LF
6.50-9.25	2271	6389	1109	8396	22,798	5926	529	951	2384
TOTAL	50,753								

PAVEMENT DELINEATION QUANTITIES

PDQ-1

REVISED BY | DATE REVISED
MICHAEL CONNER | KARLIE SMITH
CALCULATED-DESIGNED BY | CHECKED BY
FUNCTIONAL SUPERVISOR
LANCE BROWN

STATE OF CALIFORNIA - DEPARTMENT OF TRANSPORTATION
Caltrans® MAINTENANCE

P:\proj1\02\5E210_plans\pse\25e210nc001.dgn

LAST REVISION | DATE PLOTTED => 13-MAR-2012
03-08-12 | TIME PLOTTED => 11:00

Dist	COUNTY	ROUTE	POST MILES TOTAL PROJECT	SHEET No.	TOTAL SHEETS
02	Plu	36	6.5/9.2	12	23

REGISTERED CIVIL ENGINEER 03-08-12 DATE

03-08-12
PLANS APPROVAL DATE

REGISTERED PROFESSIONAL ENGINEER MICHAEL A. CONNER No. C73123 Exp. 12-31-12 CIVIL STATE OF CALIFORNIA

THE STATE OF CALIFORNIA OR ITS OFFICERS OR AGENTS SHALL NOT BE RESPONSIBLE FOR THE ACCURACY OR COMPLETENESS OF SCANNED COPIES OF THIS PLAN SHEET.

NOTE:

1. (N) NOT A SEPARATE PAY ITEM, FOR INFORMATION ONLY

ROADWAY QUANTITIES

PM-PM	(N) LENGTH	(N) PAVING WIDTH	(N) CIR WIDTH	HMA	SHOULDER BACKING	COLD IN-PLACE RECYCLING	RECYCLING ADDITIVE (CEMENT)	EMULSIFIED RECYCLING AGENT	ASPHALTIC EMULSION (FOG SEAL COAT)	SAND COVER (SEAL)	TACK COAT
	LF	LF	LF	TON	TON	SQYD	TON	TON	TON	TON	TON
6.53-6.55	105.6	43-46	43-46								
6.55-6.61	316.8	46-48	46-48								
6.61-6.64	158.4	48-33	48-33								
6.64-7.00	1900.8	33-32	33-32								
7.00-7.27	1425.6	32	32								
7.27-7.31	211.2	32-45	32-45								
7.31-7.39	422.4	45-49	45-49								
7.39-7.44	264.0	49-53	49-53								
7.44-7.45	52.8	53-40	53-40								
7.45-7.50	264.0	40-37	40-37								
7.50-7.57	369.6	37-62	37-62								
7.57-7.69	633.6	62-41	62-41								
7.69-7.72	158.4	54	30								
7.72-7.74	105.6	45									
7.74-7.76	105.6	54-49									
7.76-7.78	105.6	43									
7.78-7.80	105.6	48									
7.80-7.84	211.2	41									
7.84-7.85	52.8	44									
7.85-7.86	52.8	41									
7.86-7.89	158.4	34									
7.89-7.94	264.0	34-50	24-26	14,159	1292	60,506	123	415	25	46	46
7.94-7.98	211.2	50	26								
7.98-8.00	105.6	50									
8.00-8.01	52.8	45	26-30								
8.01-8.06	264.0	46									
8.06-8.15	475.2	54									
8.15-8.24	475.2	54-73	30-49								
8.24-8.30	316.8	82	49								
8.30-8.56	1372.8	73									
8.56-8.67	580.8	74-76									
8.67-8.72	264.0	76-73									
8.72-8.75	158.4	73									
8.75-8.79	211.2	120									
8.79-8.81	105.6	120-64									
8.81-8.84	158.4	64-54									
8.87-8.89	105.6	54-58	54-58								
8.89-8.97	422.4	58-68	58-68								
8.97-8.99	105.6	68-60	68-60								
8.99-9.04	264.0	60	60								
9.04-9.13	475.2	60	60								
9.13-9.18	264.0	60-51	60-51								
9.18-9.25	369.6	51-48	51-48								
ROAD CONNECTION AND DRIVEWAYS				693	67						2
TOTALS				14,852	1359	60,506	123	415	25	46	48

SUMMARY OF QUANTITIES

Q-1

REVISED BY | DATE REVISED
MICHAEL CONNER | KARLIE SMITH
CALCULATED-DESIGNED BY | CHECKED BY
FUNCTIONAL SUPERVISOR
LANCE BROWN

STATE OF CALIFORNIA - DEPARTMENT OF TRANSPORTATION
Caltrans MAINTENANCE

P:\proj1\02\5E210_plans\pse\25e210pa001.dgn

LAST REVISION 03-08-12 | DATE PLOTTED => 13-MAR-2012 | TIME PLOTTED => 11:00

Dist	COUNTY	ROUTE	POST MILES TOTAL PROJECT	SHEET No.	TOTAL SHEETS
02	Plu	36	6.5/9.2	13	23

REGISTERED CIVIL ENGINEER 03-08-12 DATE

03-08-12
PLANS APPROVAL DATE

REGISTERED PROFESSIONAL ENGINEER MICHAEL A. CONNER No. C73123 Exp. 12-31-12 CIVIL STATE OF CALIFORNIA

THE STATE OF CALIFORNIA OR ITS OFFICERS OR AGENTS SHALL NOT BE RESPONSIBLE FOR THE ACCURACY OR COMPLETENESS OF SCANNED COPIES OF THIS PLAN SHEET.

NOTE:

1. (N) - NOT A SEPARATE PAY ITEM, FOR INFORMATION ONLY

ADJUST UTILITY COVER TO GRADE

POST MILE	UTILITY LOCATION	SHEET No.	WATER VALVE BOX	SANITARY SEWER MANHOLE
			EA	EA
7.44	1	L-1	1	
8.24	2	L-1	1	
8.28	3	L-1		1
8.28	4	L-1		1
8.34	5	L-1		1
8.34	6	L-1		1
8.48	7	L-1	1	
8.48	8	L-1	1	
8.74	9	L-2	1	
8.74	10	L-2	1	
8.92	11	L-2	1	
8.95	12	L-2	1	
8.95	13	L-2	1	
8.95	14	L-2	1	
8.96	15	L-2		1
8.97	16	L-2		1
9.02	17	L-2		1
9.04	18	L-2	1	
9.04	19	L-2		1
9.05	20	L-2	1	
9.07	21	L-2	1	
9.10	22	L-2		1
9.10	23	L-2	1	
9.10	24	L-2		1
9.14	25	L-2	1	
9.15	26	L-2		1
9.18	27	L-2		1
9.18	28	L-2		1
SUBTOTAL			15	13
TOTAL			28	

COLD PLANE ASPHALT CONCRETE PAVEMENT

POST MILE	(N) LENGTH	(N) WIDTH	AREA	REMARKS
	LF	LF	SQYD	
6.53-6.57	200	43-46	989	BEGIN OF PROJECT
6.62	26	8	23	ROAD CONNECTION - R+
6.65	119-161	8	124	ROAD CONNECTION - L+
6.85	95-138	8	104	ROAD CONNECTION - R+
6.86	47-93	8	62	ROAD CONNECTION - R+
7.09	75-116	8	85	ROAD CONNECTION - L+
7.18	74	8	66	ROAD CONNECTION - R+
7.18	63	8	56	ROAD CONNECTION - L+
7.23	53	8	47	ROAD CONNECTION - L+
7.44	78	8	69	ROAD CONNECTION - R+
7.51	84-115	8	88	ROAD CONNECTION - R+
7.55	27-55	8	36	ROAD CONNECTION - R+
7.58	71	8	63	ROAD CONNECTION - R+
7.58	86-128	8	95	ROAD CONNECTION - L+
7.67	67-93	8	71	ROAD CONNECTION - L+
7.69-7.72	158.4	8	141	ALONG MAINLINE - R+
7.69-7.86	898	8	798	ALONG MAINLINE - L+
7.74-7.76	106	8	94	ALONG MAINLINE - R+
7.77	65-110	14	136	ROAD CONNECTION - L+
7.78-7.80	106	8	94	ALONG MAINLINE - R+
7.84-7.85	53	8	47	ALONG MAINLINE - R+
7.84	80-132	14	165	ROAD CONNECTION - L+
7.85-7.89	212	8	188	ALONG MAINLINE - R+
7.89-7.94	264	8	235	ALONG MAINLINE - L+
7.89-7.94	264	8	235	ALONG MAINLINE - R+
7.91	47-75	19	129	ROAD CONNECTION - L+
7.98-8.00	106	8	94	ALONG MAINLINE - R+
7.98-8.01	159	8	141	ALONG MAINLINE - L+
8.01-8.75	3908	8	3474	ALONG MAINLINE - R+
8.06-8.75	3644	8	3239	ALONG MAINLINE - L+
8.28	54-88	21	166	ROAD CONNECTION -R+
8.34	56-92	12	99	ROAD CONNECTION - L+
8.48	211-241	20	502	ROAD CONNECTION - R+
8.75	54-55	23	139	ROAD CONNECTION - L+
8.75	45-99	24	192	ROAD CONNECTION - R+
8.70-8.75	249	12	332	TURN POCKET
8.75-8.84	476	54-120	4934	MAINLINE
8.87-8.89	106	54-58	660	MAINLINE
8.89-8.97	423	58-68	2961	MAINLINE
8.97-8.99	106	68-60	754	MAINLINE
8.99-9.04	264	60	1760	MAINLINE
9.04-9.13	476	60	3173	MAINLINE
9.13-9.18	264	60-51	1628	MAINLINE
9.18-9.25	370	61-48	2241	MAINLINE
9.23-9.25	100	48	533	END OF PROJECT
TOTAL			31,263	

SUMMARY OF QUANTITIES

Q-2

REVISED BY | DATE REVISED
MICHAEL CONNER | KARLIE SMITH
CALCULATED-DESIGNED BY | CHECKED BY
FUNCTIONAL SUPERVISOR
LANCE BROWN

STATE OF CALIFORNIA - DEPARTMENT OF TRANSPORTATION
Caltrans® MAINTENANCE

P:\proj1\02\5E210_plans\pse\25e210pa002.dgn

LAST REVISION 03-08-12 | DATE PLOTTED => 13-MAR-2012 | TIME PLOTTED => 11:00

Dist	COUNTY	ROUTE	POST MILES TOTAL PROJECT	SHEET No.	TOTAL SHEETS
02	Plu	36	6.5/9.2	14	23

ART 03-08-12
REGISTERED ELECTRICAL ENGINEER DATE

03-08-12
PLANS APPROVAL DATE

REGISTERED PROFESSIONAL ENGINEER A.P. ROBLES No. E15293 Exp. 3-31-13 ELECTRICAL STATE OF CALIFORNIA

THE STATE OF CALIFORNIA OR ITS OFFICERS OR AGENTS SHALL NOT BE RESPONSIBLE FOR THE ACCURACY OR COMPLETENESS OF SCANNED COPIES OF THIS PLAN SHEET.

NOTE:

1. FOR ACCURATE RIGHT OF WAY DATA, CONTACT RIGHT OF WAY ENGINEERING AT THE DISTRICT OFFICE.

PROJECT NOTES:

1. AB EXISTING LOOPS.
2. FINAL LOCATION OF LOOPS WILL BE DETERMINED BY THE ENGINER.
3. COIL 10′ OF CONDUCTORS IN PULL BOX.

4 REPLACE PB.

5 2-3"C, 4 STC, 2 DLC.

ABBREVIATIONS:

STC SCREENED TRANSMISSION CABLE

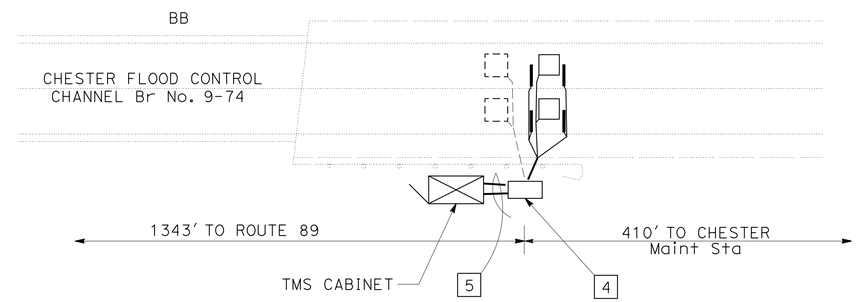

TMS No. 251

EXISTING TRAFFIC MANAGEMENT SYSTEM ELEMENTS TO BE MAINTAINED

TYPE	PM	DESCRIPTION
CCTV	Plu-36-6.29	NE CORNER OF SR 36/89 Jct
HAR SIGN WITH FLASHERS	Plu-36-6.52	ON EB SHOULDER OF SR 36 (FOR EB TRAFFIC)

EXISTING LOOP DETECTORS TO BE PROTECTED IN PLACE

ID No.	PM	DESCRIPTION	TYPE	LOOPS
P64	Plu-36-9.24	360′ E OF MELISSA Ave	PROFILE	2

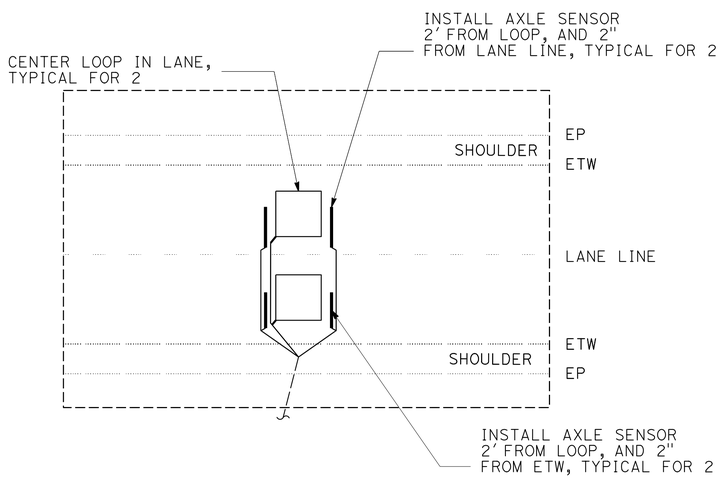

AXLE SENSOR ARRAY INSTALLATION

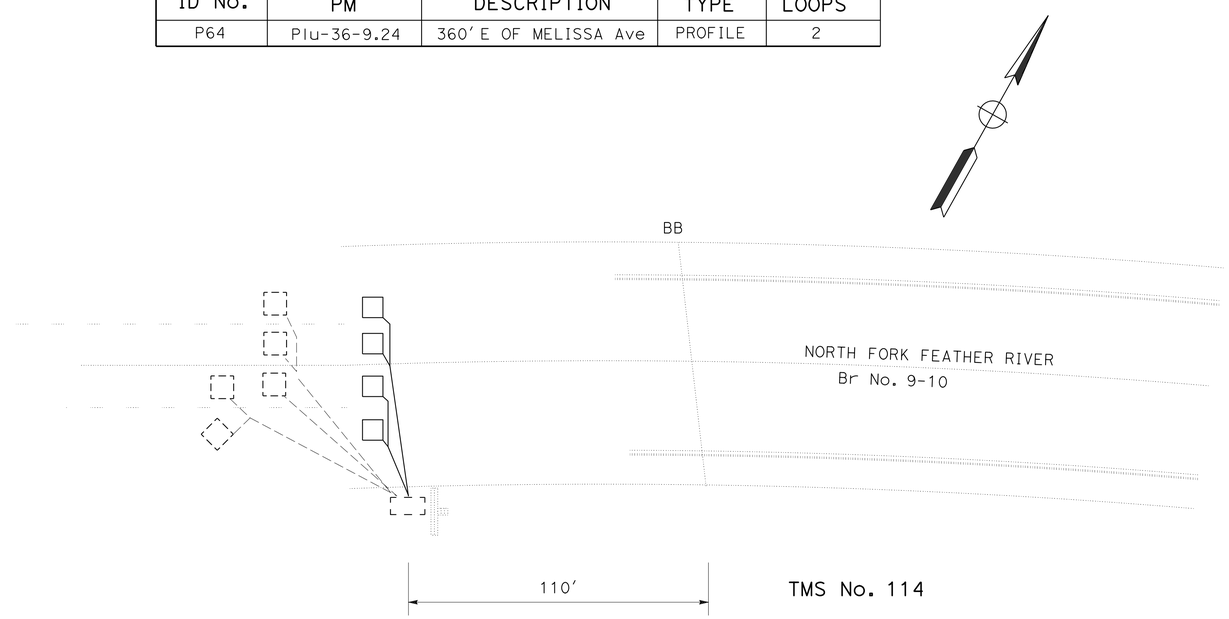

TMS No. 114

TRAFFIC MONITORING STATION

NO SCALE

E-1

APPROVED FOR ELECTRICAL WORK ONLY

REVISED BY | DATE REVISED
ARTURO ROBLES | KAREN CARMO
CALCULATED-DESIGNED BY | CHECKED BY
FUNCTIONAL SUPERVISOR: ROB STINGER
STATE OF CALIFORNIA - DEPARTMENT OF TRANSPORTATION
Caltrans® ELECTRICAL DESIGN
P:\proj1\02\5E210_plans\pse\25e210ua001.dgn

LAST REVISION | DATE PLOTTED => 13-MAR-2012
03-08-12 | TIME PLOTTED => 11:00

DIST	COUNTY	ROUTE	POST MILES TOTAL PROJECT	SHEET NO.	TOTAL SHEETS
02	Plu	36	6.5/9.2	15	23

Randell D. Hiatt
REGISTERED CIVIL ENGINEER

June 6, 2008
PLANS APPROVAL DATE

REGISTERED PROFESSIONAL ENGINEER
Randell D. Hiatt
No. C50200
Exp. 6-30-09
CIVIL
STATE OF CALIFORNIA

The State of California or its officers or agents shall not be responsible for the accuracy or completeness of electronic copies of this plan sheet.

To accompany plans dated 03-08-12

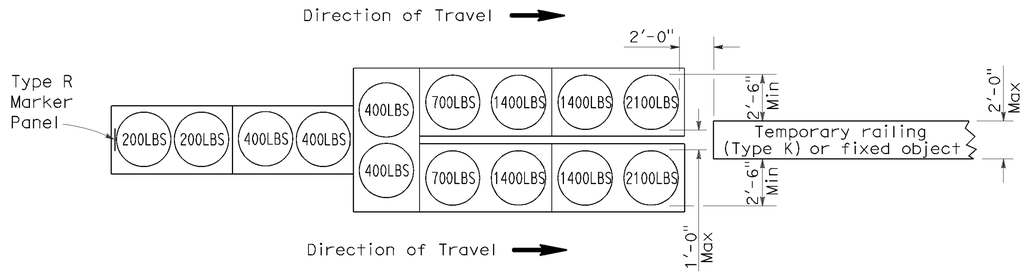

ARRAY 'TU14'

Approach speed 45 mph or more

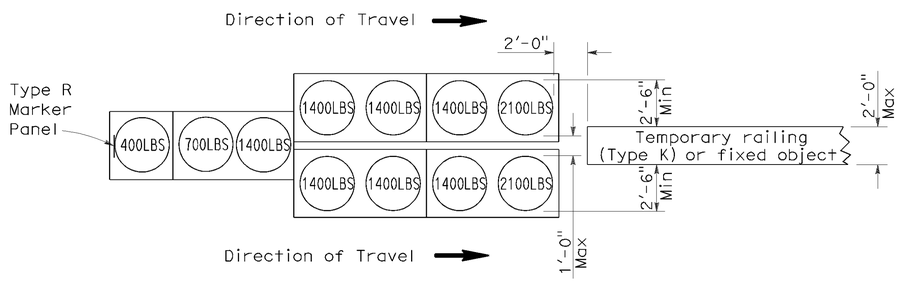

ARRAY 'TU11'

Approach speed less than 45 mph

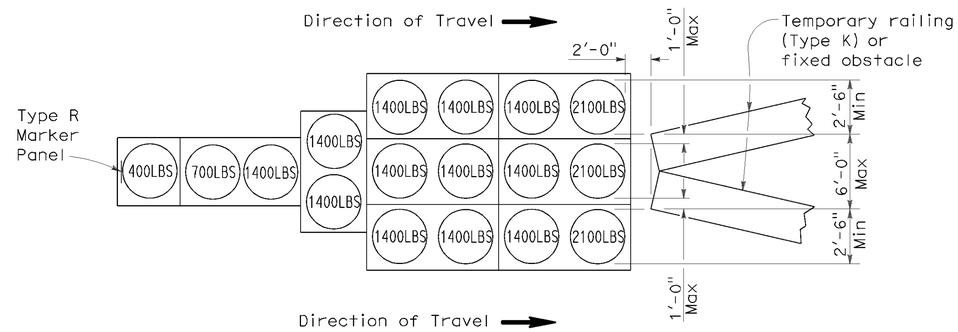

ARRAY 'TU17'

Approach speed less than 45 mph

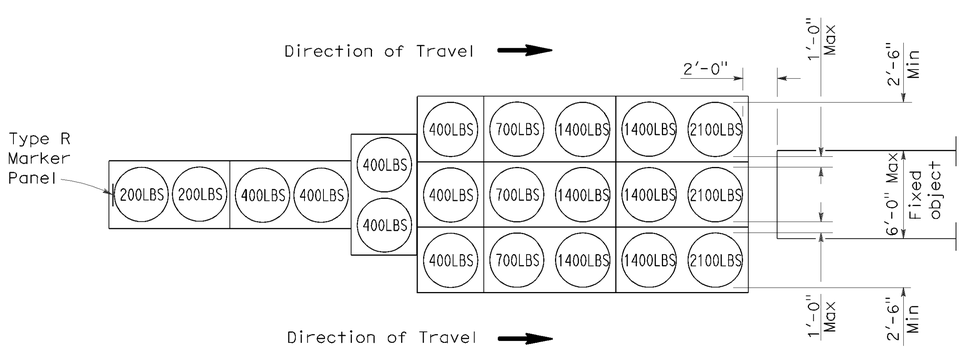

ARRAY 'TU21'

Approach speed 45 mph or more

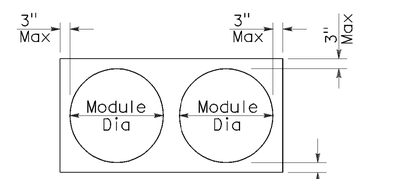

PLAN

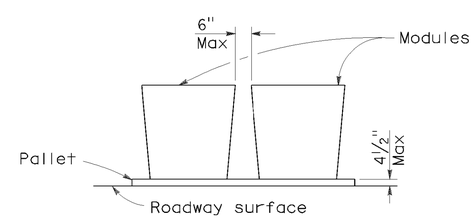

ELEVATION

CRASH CUSHION PALLET DETAIL

See Note 7

NOTES:

1. (XXX) Indicates sand filled module location and weight of sand in pounds for each module. Module spacing is based on the greater diameter of the module.
2. All sand weights are nominal.
3. Temporary crash cushion arrays shall not encroach on the traveled way.
4. Place the top of Type R marker panel 1" below the module lid.
5. Refer to Standard Plan A73B for marker details.
6. Approach speeds indicated conform to NCHRP 350 Report criteria.
7. Use of pallets is optional.

STATE OF CALIFORNIA
DEPARTMENT OF TRANSPORTATION

TEMPORARY CRASH CUSHION, SAND FILLED (UNIDIRECTIONAL)

NO SCALE

RSP T1A DATED JUNE 6, 2008 SUPERSEDES STANDARD PLAN T1A
DATED MAY 1, 2006 - PAGE 211 OF THE STANDARD PLANS BOOK DATED MAY 2006.

REVISED STANDARD PLAN RSP T1A

2006 REVISED STANDARD PLAN RSP T1A

P:\proj1\02\5E210_plans\pse\25e210va001.dgn
USERNAME => s123119
DGN FILE => 25e210va001.dgn
DATE PLOTTED => 13-MAR-2012
TIME PLOTTED => 11:00
5-15-08

DIST	COUNTY	ROUTE	POST MILES TOTAL PROJECT	SHEET NO.	TOTAL SHEETS
02	Plu	36	6.5/9.2	16	23

Randell D. Hiatt
REGISTERED CIVIL ENGINEER

June 6, 2008
PLANS APPROVAL DATE

REGISTERED PROFESSIONAL ENGINEER
Randell D. Hiatt
No. C50200
Exp. 6-30-09
CIVIL
STATE OF CALIFORNIA

The State of California or its officers or agents shall not be responsible for the accuracy or completeness of electronic copies of this plan sheet.

To accompany plans dated 03-08-12

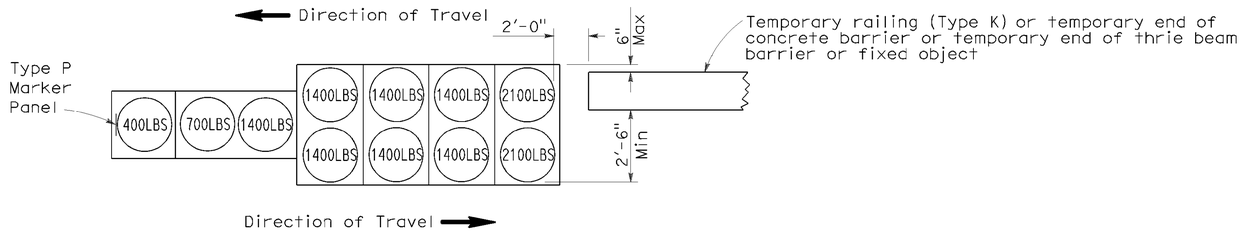

ARRAY 'TB11'

Approach speed less than 45 mph

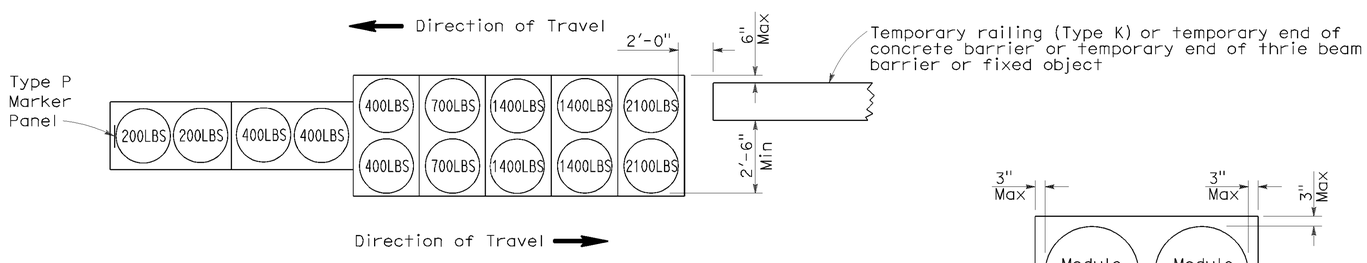

ARRAY 'TB14'

Approach speed 45 mph or more

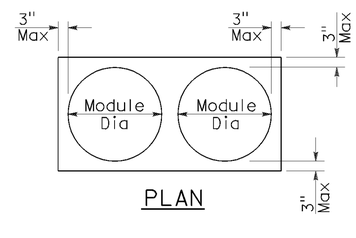

PLAN

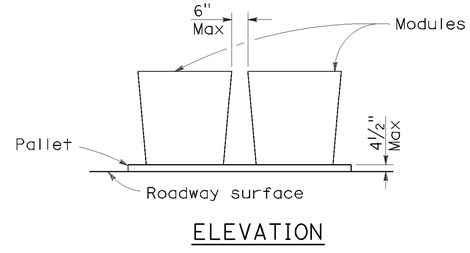

ELEVATION

CRASH CUSHION PALLET DETAIL

See Note 7

NOTES:

1. (XXX) Indicates sand filled module location and weight of sand in pounds for each module. Module spacing is based on the greater diameter of the module.
2. All sand weights are nominal.
3. Temporary crash cushion arrays shall not encroach on the traveled way.
4. Place the Type P marker panel so that the bottom of the panel rests upon the pallet.
5. Refer to Standard Plan A73B for marker details.
6. Approach speeds indicated conform to NCHRP 350 Report criteria.
7. Use of pallets is optional.

STATE OF CALIFORNIA
DEPARTMENT OF TRANSPORTATION

TEMPORARY CRASH CUSHION, SAND FILLED (BIDIRECTIONAL)

NO SCALE

RSP T1B DATED JUNE 6, 2008 SUPERSEDES STANDARD PLAN T1B
DATED MAY 1, 2006 - PAGE 212 OF THE STANDARD PLANS BOOK DATED MAY 2006.

REVISED STANDARD PLAN RSP T1B

2006 REVISED STANDARD PLAN RSP T1B

P:\proj1\02\5E210_plans\pse\25e210va002.dgn
USERNAME => s123119
DGN FILE => 25e210va002.dgn
DATE PLOTTED => 13-MAR-2012
TIME PLOTTED => 11:00
5-15-08

DIST	COUNTY	ROUTE	POST MILES TOTAL PROJECT	SHEET NO.	TOTAL SHEETS
02	Plu	36	6.5/9.2	17	23

Randell D. Hiatt
REGISTERED CIVIL ENGINEER

June 6, 2008
PLANS APPROVAL DATE

REGISTERED PROFESSIONAL ENGINEER
Randell D. Hiatt
No. C50200
Exp. 6-30-09
CIVIL
STATE OF CALIFORNIA

The State of California or its officers or agents shall not be responsible for the accuracy or completeness of electronic copies of this plan sheet.

To accompany plans dated 03-08-12

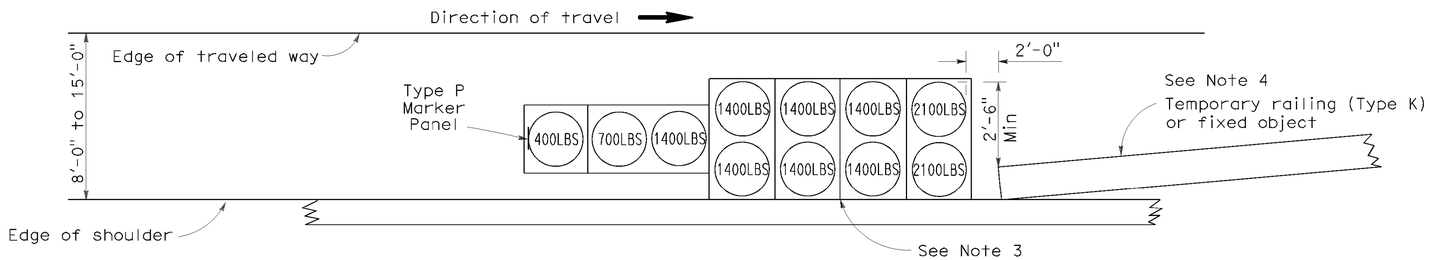

ARRAY 'TS11'

Approach speed less than 45 mph
See Note 9

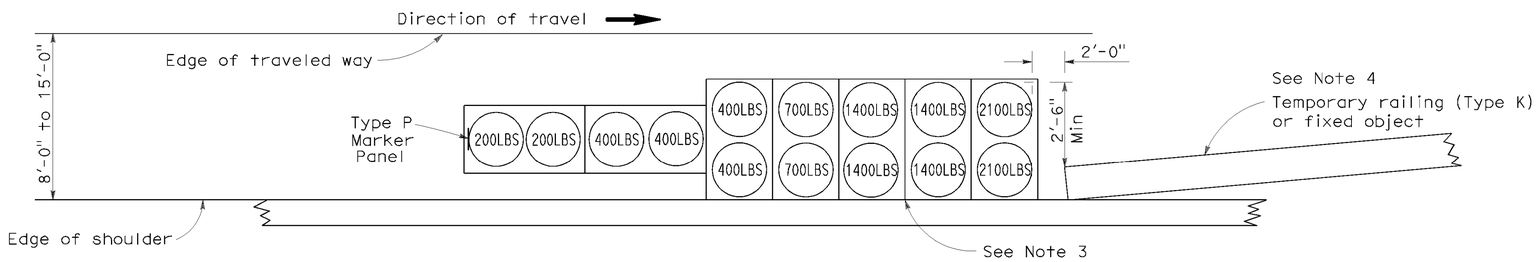

ARRAY 'TS14'

Approach speed 45 mph or more
See Note 9

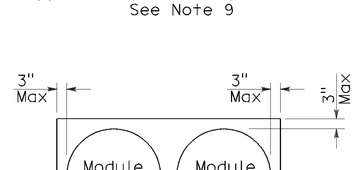

PLAN

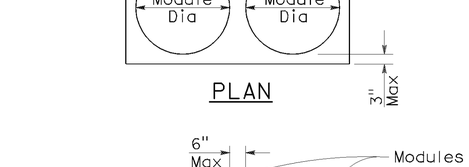

ELEVATION

CRASH CUSHION PALLET DETAIL

See Note 11

NOTES:

1. (XXX) Indicates sand filled module location and weight of sand in pounds for each module. Module spacing is based on the greater diameter of the module.
2. All sand weights are nominal.
3. The temporary crash cushion arrays shown on this plan shall be used only in locations where there will be traffic on one side of the temporary crash cushion array.
4. If the fixed object or approach end of the temporary railing is less than 15'-0" from the edge of traveled way, a temporary crash cushion is required in a construction or work zone.
5. Temporary crash cushion arrays shall not encroach on the traveled way.
6. Arrays for median shoulders shall conform to details shown on this plan for outside shoulders.
7. Place the Type P marker panel so that the bottom of the panel rests upon the pallet and faces traffic.
8. Refer to Standard Plan A73B for marker details.
9. For shoulder widths less than 8'-0", appropriate approved crash cushion protection, other than sand filled modules, shall be provided at fixed objects and at approach ends of temporary railing. The specific type of crash cushion shall be as shown on the project plans or as specified in the Special Provisions, or if not shown on the project plans or specified in the Special Provisions, shall be as approved by the Engineer.
10. Approach speeds indicated conform to NCHRP 350 Report criteria.
11. Use of pallets is optional.

STATE OF CALIFORNIA
DEPARTMENT OF TRANSPORTATION

TEMPORARY CRASH CUSHION, SAND FILLED (SHOULDER INSTALLATIONS)

NO SCALE

RSP T2 DATED JUNE 6, 2008 SUPERSEDES STANDARD PLAN T2
DATED MAY 1, 2006 - PAGE 213 OF THE STANDARD PLANS BOOK DATED MAY 2006.

REVISED STANDARD PLAN RSP T2

2006 REVISED STANDARD PLAN RSP T2

Dist	COUNTY	ROUTE	POST MILES TOTAL PROJECT	SHEET No.	TOTAL SHEETS
02	Plu	36	6.5/9.2	18	23

Randell D. Hiatt
REGISTERED CIVIL ENGINEER

May 20, 2011
PLANS APPROVAL DATE

REGISTERED PROFESSIONAL ENGINEER
Randell D. Hiatt
No. C50200
Exp. 6-30-11
CIVIL
STATE OF CALIFORNIA

The State of California or its officers or agents shall not be responsible for the accuracy or completeness of electronic copies of this plan sheet.

To accompany plans dated 03-08-12

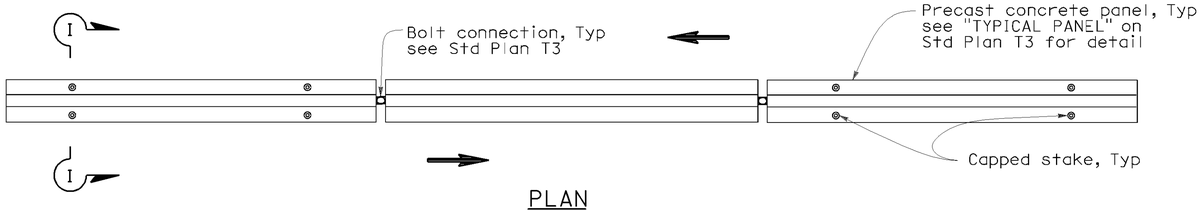

PLAN

RAILING STAKING CONFIGURATION FOR TWO-WAY TRAFFIC

See Note 1

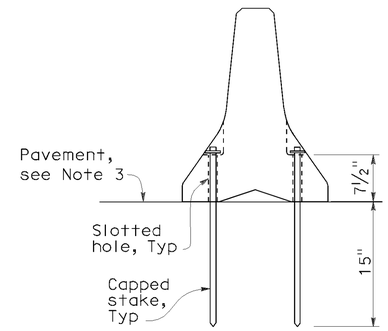

SECTION I-I

NOTES:

1. Where Type K Temporary Railing is placed as a temporary or long term barrier in two-way traffic on highways with less than 24" from the edge of traveled way, use four capped stakes per every other panel with end panels staked.
2. Where Type K Temporary Railing is placed 3" to 24" from the edge of an excavation on highways, use two capped stakes per panel along the traffic side.
3. Staked Type K Temporary Railing must be supported by at least 4" thick concrete, hot mix asphalt or existing asphalt concrete pavement.
4. The minimum yield strength for the washer must be 60,000 psi.
5. Direction of adjacent traffic indicated by ⟹.

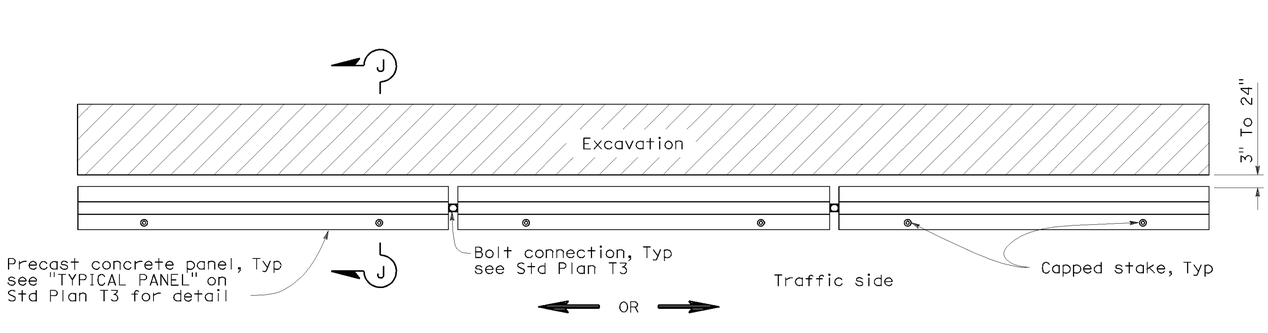

PLAN

RAILING STAKING CONFIGURATION ADJACENT TO AN EXCAVATION

See Note 2

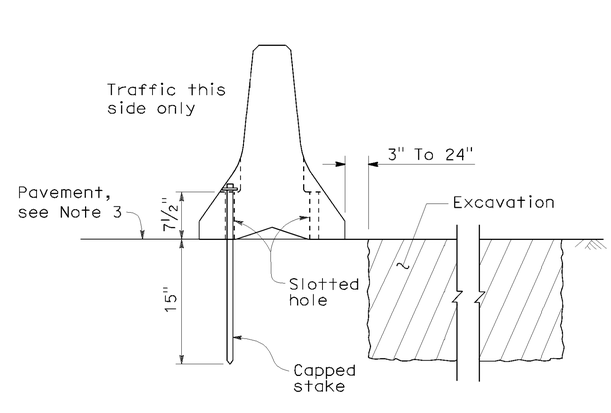

SECTION J-J

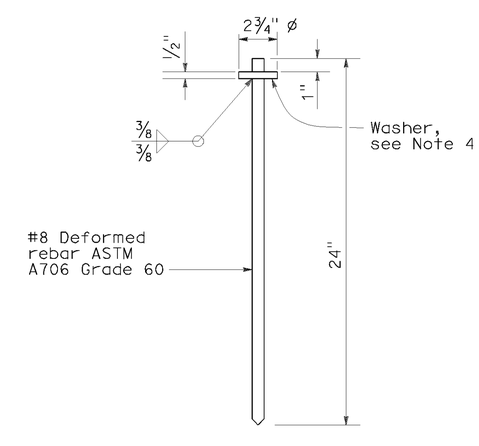

CAPPED STAKE DETAIL

STATE OF CALIFORNIA
DEPARTMENT OF TRANSPORTATION

TEMPORARY RAILING (TYPE K)

NO SCALE

NSP T3A DATED MAY 20, 2011 SUPPLEMENTS
THE STANDARD PLANS BOOK DATED MAY 2006.

NEW STANDARD PLAN NSP T3A

2006 NEW STANDARD PLAN NSP T3A

P:\proj1\02\5E210_plans\pse\25e210va004.dgn

USERNAME => s123119
DGN FILE => 25e210va004.dgn

DATE PLOTTED => 13-MAR-2012
TIME PLOTTED => 11:00

8-31-10

DIST	COUNTY	ROUTE	POST MILES TOTAL PROJECT	SHEET NO.	TOTAL SHEETS
02	Plu	36	6.5/9.2	19	23

REGISTERED ELECTRICAL ENGINEER

October 5, 2007
PLANS APPROVAL DATE

REGISTERED PROFESSIONAL ENGINEER Jeffery G. McRae No. E14512 Exp. 6-30-08 ELECTRICAL STATE OF CALIFORNIA

The State of California or its officers or agents shall not be responsible for the accuracy or completeness of electronic copies of this plan sheet.

To accompany plans dated 03-08-12

ELECTROLIERS

STANDARD TYPES
15, 15D
15 STRUCTURE
21, 21D STRUCTURE
30
31
32
35
36-20A

High mast light pole

Double Arm lighting standard

Existing electrolier

Electrolier foundation (Future installation)

NOTES:

1. Luminaires shall be 310 W HPS when installed on Type 21, 21D, 30, 31, 32, 35 and 36-20A Standards, unless otherwise specified. Luminaires shall be 200 W HPS when installed on other type standards or poles, unless otherwise specified.
2. Luminaires shall be the cutoff type, ANSI Type III medium cutoff lighting distribution, unless otherwise specified.
3. Variations noted adjacent to symbol on project plans.

Electrolier (see project notes or project plans)

Luminaire on wood pole

STANDARD NOTES:

- AB — Abandon. If applied to conduit, remove conductors.
- BC — Install pull box in existing conduit run.
- BP — Pedestrian barricade, type as indicated on plan.
- CB — Install conduit into existing pull box.
- CC — Connect new and existing conduit. Remove existing conductors and install conductors as indicated.
- CF — Conduit to remain for future use. Remove conductors. Install pull wire or rope.
- DH — Detector handhole.
- FA — Foundation to be abandoned.
- IS — Install sign on signal mast arm.
- NS — No slip base on standard.
- PEC — Photoelectric control.
- PEU — Photoelectric unit.
- RC — Equipment or material to be removed and become the property of the Contractor.
- RE — Remove electrolier, fuses and ballast. Tape ends of conductors.
- RL — Relocate equipment.
- RR — Remove and reuse equipment.
- RS — Remove and salvage equipment.
- SC — Splice new to existing conductors.
- SD — Service disconnect.
- SF — Standard to remain for future use. Remove luminaire, pole conductors, fuses and ballast.
- TSP — Telephone service point.

ABBREVIATIONS AND EQUIPMENT DESIGNATIONS

PROPOSED	EXISTING	
BBS	bbs	Battery backup system
BC	bc	Bolt circle
C	C	Conduit
CCTV	cctv	Closed circuit television
CKT	ckt	Circuit
CMS	cms	Changeable message sign
DLC	dlc	Loop detector lead-in cable
EMS	ems	Extinguishable message sign
EVC	evc	Emergency vehicle cable
EVD	evd	Emergency vehicle detector
FB	fb	Flashing beacon
FBCA	fbca	Flashing beacon control assembly
FBS	fbs	Flashing beacon with slip base
FO	fo	Fiber optic
G	G	Ground (Equipment Grounding Conductor)
GFCI	GFCI	Ground fault circuit interrupt
HAR	har	Highway advisory radio
HEX	hex	Hexagonal
HPS	hps	High pressure sodium
IISNS	iisns	Internally illuminated street name sign
ISL	isl	Induction sign lighting
LED	led	Light emitting diode
LMA	lma	Luminaire mast arm
LPS	lps	Low pressure sodium
LTG	ltg	Lighting
LUM	lum	Luminaire
MAT	mat	Mast arm mounting vehicle signal faces, top attachment
MAS	mas	Mast arm mounting vehicle signal faces, side attachment
MAS-4A	mas-4A	Mast arm mounting vehicle signal faces, side attachment - 4 signal section
MAS-4B	mas-4B	
MAS-4C	mas-4C	
MAS-5A	mas-5A	Mast arm mounting vehicle signal faces, side attachment - 5 signal section
MAS-5B	mas-5B	
MC	mc	Mercury contactor
M/M	m/m	Multiple to multiple transformer
MT	mt	Conduit with pull wire or rope only
MTG	mtg	Mounting
	mv	Mercury vapor lighting fixture
N	N	Neutral (Grounded Conductor)
NC	NC	Normally closed
NO	NO	Normally open
PB	pb	Pull box
PEC	pec	Photoelectric control (Type I, II, III, IV or V as shown)
PED	ped	Pedestrian
PEU	peu	Photoelectric unit
PPB	ppb	Pedestrian push button
RL		Relocated equipment
RM	rm	Ramp metering
SB	sb	Slip base
SIC	sic	Signal interconnect cable
SIG	sig	Signal
SMA	sma	Signal mast arm
SNS	sns	Street name sign
SP	sp	Service point
TDC	tdc	Telephone demarcation cabinet
TMS	tms	Traffic monitoring station
TOS	tos	Traffic Operations System
VEH	veh	Vehicle
XFMR	xfmr	Transformer
COMM	comm	Communication
RWIS	rwis	Roadway weather information system

SOFFIT AND WALL MOUNTED LUMINAIRES

Pendant, 70 W HPS unless otherwise specified.

Flush, 70 W HPS unless otherwise specified.

Wall surface, 70 W HPS unless otherwise specified.

Existing soffit or wall luminaire to remain unmodified.

Existing soffit or wall luminaire to be modified as specified.

NOTE:

Arrow indicates "street side" of luminaire.

STATE OF CALIFORNIA
DEPARTMENT OF TRANSPORTATION

ELECTRICAL SYSTEMS (SYMBOLS AND ABBREVIATIONS)

NO SCALE

RSP ES-1A DATED OCTOBER 5, 2007 SUPERSEDES STANDARD PLAN ES-1A DATED MAY 1, 2006 - PAGE 400 OF THE STANDARD PLANS BOOK DATED MAY 2006.

REVISED STANDARD PLAN RSP ES-1A

2006 REVISED STANDARD PLAN RSP ES-1A

DIST	COUNTY	ROUTE	POST MILES TOTAL PROJECT	SHEET NO.	TOTAL SHEETS
02	Plu	36	6.5/9.2	20	23

REGISTERED ELECTRICAL ENGINEER

October 5, 2007
PLANS APPROVAL DATE

REGISTERED PROFESSIONAL ENGINEER Jeffery G. McRae No. E14512 Exp. 6-30-08 ELECTRICAL STATE OF CALIFORNIA

The State of California or its officers or agents shall not be responsible for the accuracy or completeness of electronic copies of this plan sheet.

To accompany plans dated 03-08-12

CONDUIT

PROPOSED	EXISTING	
		Lighting Conduit, unless otherwise indicated or noted
		Traffic signal conduit
C	c	Communication conduit
T	t	Telephone conduit
F	f	Fire alarm conduit
FO	fo	Fiber optic conduit
		Conduit termination (RSP ES-9A C)
R	r	Conduit riser in/on structure or service pole

SERVICE EQUIPMENT

PROPOSED	EXISTING	
OH	oh	Overhead lines
U	U	Wood pole "U" indicates utility owned
		Pole guy with anchor
		Utility transformer - ground mounted
III		Service equipment enclosure type
		Service equipment enclosure door indicates front of enclosure
T	t	Telephone demarcation cabinet

POLE-MOUNTED SERVICE DESIGNATION

Type of installation

TYPE H SERVICE - 28'-10" ← Pole height above grade

ILLUMINATED OVERHEAD SIGN

PROPOSED	EXISTING	
		Overhead sign - Single post
		Overhead sign - Two post
		Overhead sign - Mounted on structure
		Overhead sign with electrolier

SIGNAL EQUIPMENT

PROPOSED	EXISTING	
		Pedestrian signal face
		Pedestrian push button post
		Pedestrian barricade
		Vehicle signal face (with backplate, 3-Section: red, yellow and green)
		Vehicle signal face with angle visors
PV	PV	Modifications of basic symbols: "L" indicates all non-arrow sections louvered "LG" indicates louvered green section only "PV" indicates 12" programmed visibility sections "8" indicates all 8" sections (only when specified)
		Type 15TS and Vehicle signal face
		Vehicle signal face with red, yellow and green left arrow sections
		Vehicle signal face with red and yellow sections and up green arrow
		Vehicle signal face (5 Section) with red, yellow and green sections and yellow and green right arrows
		Type 1 Standard and attached vehicle signal faces
		Standard with signal mast arm only and attached vehicle signal faces and internally illuminated street name sign
		Type 33 Standard, Left-turn vehicle signal face and sign
		Standard with luminaire and signal mast arms and attached vehicle signal faces
		Cantilever flashing beacon Type 9 Frame, with a sign unless otherwise specified or indicated
		Type 15-FBS Standard with two vehicle signal face sections with lens, backplate and visor with a sign
R	Y	Flashing beacon. One vehicle signal face section with lens, backplate and visor. "R" indicates red indication, "Y" indicates yellow indication
		Controller assembly. Door indicates front of cabinet

SIGNAL EQUIPMENT Cont

PROPOSED	EXISTING	
		Guard post
		Type 1 Standard with "Meter On" sign
		Emergency Vehicle detector

NOTES:

1. All signal sections shall be 12" unless shown otherwise.
2. Signal heads shall be provided with backplates unless shown otherwise.
3. Signal indication shall be LED.

STATE OF CALIFORNIA
DEPARTMENT OF TRANSPORTATION

ELECTRICAL SYSTEMS (SYMBOLS AND ABBREVIATIONS)

NO SCALE

RSP ES-1B DATED OCTOBER 5, 2007 SUPERCEDES STANDARD PLAN ES-1B DATED MAY 1, 2006 - PAGE 401 OF THE STANDARD PLANS BOOK DATED MAY 2006.

REVISED STANDARD PLAN RSP ES-1B

2006 REVISED STANDARD PLAN RSP ES-1B

P:\proj1\02\5E210_plans\pse\25e210va006.dgn

USERNAME => s123119
DGN FILE => 25e210va006.dgn

DATE PLOTTED => 13-MAR-2012
TIME PLOTTED => 11:00

7-10-07

DIST	COUNTY	ROUTE	POST MILES TOTAL PROJECT	SHEET NO.	TOTAL SHEETS
02	Plu	36	6.5/9.2	21	23

REGISTERED ELECTRICAL ENGINEER

October 5, 2007
PLANS APPROVAL DATE

REGISTERED PROFESSIONAL ENGINEER Jeffery G. McRae No. E14512 Exp. 6-30-08 ELECTRICAL STATE OF CALIFORNIA

The State of California or its officers or agents shall not be responsible for the accuracy or completeness of electronic copies of this plan sheet.

To accompany plans dated 03-08-12

EQUIPMENT IDENTIFICATION

ILLUMINATED SIGN IDENTIFICATION NUMBER:

Sign No. 12345 — Sign number - Place on post or structure

10 ISL SCI 1.0
- 10 — Transformer rating (kVA)
- SCI — Lighting control type
- ISL — Number and type of fixtures

Do NOT place on standard or structure

ELECTROLIER OR EQUIPMENT IDENTIFICATION NUMBER:

12345 - 15'-0"
- 15'-0" — Mast arm length, if shown. Do not place on standard or structure.
- 12345 — Equipment number - Place on standard or structure. Existing equipment numbers are shown in parenthesis

CONDUIT AND CONDUCTOR IDENTIFICATION:

1½"C, 2#10, 15#14, 2 DLC
- 2#10, 15#14, 2 DLC — Number and size of conductors and cables
- 1½"C — Size of conduit in inches

Ø1, Ø2, Ø2P, etc.	Traffic phase identification for signal faces, detectors and phase diagrams
1 2 3	Project note numbers
A B C	Equipment description, installation or item numbers
1 2 3	Conduit run numbers

SIGNAL AND LIGHTING STANDARD (TYPICAL DESIGNATION):

19A - 3 - 100
- 100 — Wind velocity = 100 mph
- 3 — Case 3 arm loading
- 19A — Standard type
- Standard Plan sheet number
- Detail number or letter

MISCELLANEOUS EQUIPMENT

PROPOSED	EXISTING	
CMS	cms	Changeable message sign
		Closed circuit television camera
		Highway advisory radio pole and antenna
EMS	ems	Extinguishable message sign
M V	m v	Detection device M = Microwave sensor V = Video image sensor

WIRING DIAGRAM LEGEND

P	Pole
CB	Circuit breaker
A	Ampere
V	Volt
M	Metered
UM	Unmetered
NB	Neutral bus
GB	Ground bus
G	Equipment grounding conductor
N	Grounded conductor (Neutral)

- External conductor
- Conductor or bus
- Tie point
- Contactor coil
- Contactor, Contact NO
- Terminal blocks
- Contactor, Contact NC
- Enclosure bond
- Grounding electrode
- Circuit breaker
- Receptacle

PULL BOXES

PROPOSED	EXISTING	
		Pull box-No. 5 unless otherwise indicated or noted.
3	9A(21)	Pull box-Additional designations or descriptions

3 = No. 3½ pull box
5 = No. 5 pull box
6 = No. 6 pull box
7 = No. 7 (Ceiling pull box)
8 = No. 8 (Pendant soffit pull box)
9 = No. 9 pull box
9A = No. 9A pull box

(C) = Communications pull box
(E) = Pull box with extension
(S) = Sprinkler control pull box
(21) = Anchor bolts and conduit for future installation of Type 21 Standard
(T) = Traffic pull box

VEHICLE DETECTORS

5 J 9 U
- U = Upper, L = Lower
- Slot number in input file
- Input file (I or J)
- Phase
- Vehicle detector designation

PROPOSED	EXISTING	
		Type A detector loop. Outline of sawcut shown.
		Type B detector loop. Outline of sawcut shown.
		Type C detector loop. Outline of sawcut shown.
		Type D detector loop. Outline of sawcut shown.
		Type E detector loop. Outline of sawcut shown.
		Type Q detector loop. Outline of sawcut shown.
		Magnetic detector
DH	dh	Detector handhole
		Microwave or video detection zone

STATE OF CALIFORNIA
DEPARTMENT OF TRANSPORTATION

ELECTRICAL SYSTEMS (SYMBOLS AND ABBREVIATIONS)

NO SCALE

RSP ES-1C DATED OCTOBER 5, 2007 SUPERCEDES STANDARD PLAN ES-1C DATED MAY 1, 2006 - PAGE 402 OF THE STANDARD PLANS BOOK DATED MAY 2006.

REVISED STANDARD PLAN RSP ES-1C

2006 REVISED STANDARD PLAN RSP ES-1C

P:\proj1\02\5E210_plans\pse\25e210va007.dgn

USERNAME => s123119
DGN FILE => 25e210va007.dgn

DATE PLOTTED => 13-MAR-2012
TIME PLOTTED => 11:00

7-10-07

DIST	COUNTY	ROUTE	POST MILES TOTAL PROJECT	SHEET NO.	TOTAL SHEETS
02	Plu	36	6.5/9.2	22	23

REGISTERED ELECTRICAL ENGINEER

October 5, 2007
PLANS APPROVAL DATE

REGISTERED PROFESSIONAL ENGINEER Jeffery G. McRae No. E14512 Exp. 6-30-08 ELECTRICAL STATE OF CALIFORNIA

The State of California or its officers or agents shall not be responsible for the accuracy or completeness of electronic copies of this plan sheet.

To accompany plans dated 03-08-12

2006 REVISED STANDARD PLAN RSP ES-5A

LOOP INSTALLATION PROCEDURE

1. Loops shall be centered in lanes.
2. Saw slots in pavement for loop conductors as shown in details.
3. Distance between side of loop and a lead-in saw cut from adjacent detectors shall be 2'-0" minimum. Distance between lead-in saw cuts shall be 6" minimum.
4. Bottom of saw slot shall be smooth with no sharp edges.
5. Slots shall be washed until clean, blown out and thoroughly dried before installing loop conductors.
6. Adjacent loops on the same sensor unit channel shall be wound in opposite directions.
7. Identify and tag loop circuit pairs in the pull box with loop number, start (S) and finish (F) of conductor. Identify and tag lead-in-cable with sensor number and phase.
8. Install loop conductor in slot using a 3/16" to 1/4" thick wood paddle. Hold loop conductors with wood paddles (at the bottom of the sawed slot) during sealant placement.
9. No more than 2 twisted pairs shall be installed in one sawed slot.
10. Allow additional 5'-0" of slack length of conductor for the lead-in run to pull box.
11. The additional length of each conductor for each loop shall be twisted together into a pair (6 turns per 3'-4" minimum) before being placed in the slot and conduit leading to pull box.
12. Test each loop circuit for continuity, circuit resistance and insulation resistance at the pull box before filling slots.
13. Fill slots as shown in details.
14. Splice loop conductors to lead-in-cable. Splices shall be soldered.
15. End of lead-in-cable and Type 2 loop conductor shall be waterproofed prior to installing in conduit to prevent moisture from entering the cable.
16. Lead-in-cable shall not be spliced between the pull box and the controller cabinet terminals.
17. Test each loop circuit for continuity, circuit resistance and insulation resistance at the controller cabinet location.
18. Where loop conductors are not to be spliced to a lead-in-cable, the ends of the conductors shall be taped and waterproofed with electrical insulating coating.

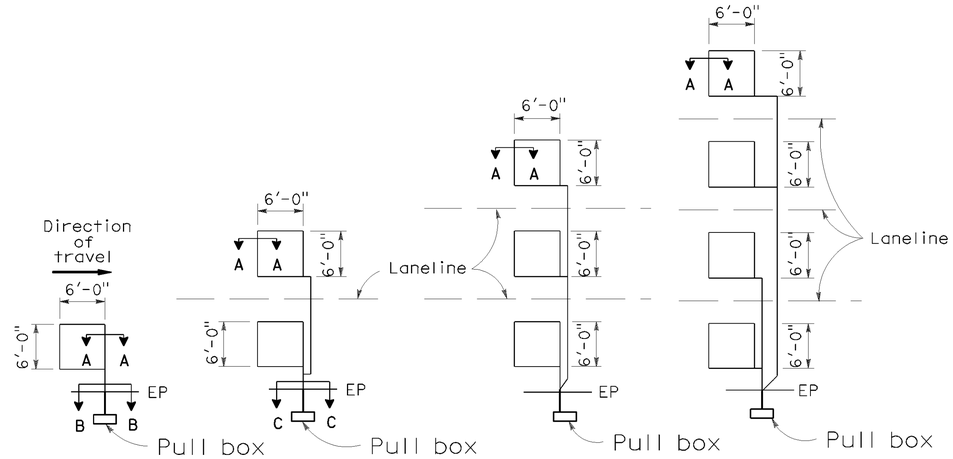

TYPE 1A INSTALLATION | TYPE 2A INSTALLATION | TYPE 3A INSTALLATION | TYPE 4A INSTALLATION

SAWCUT DETAILS

(Type A loop detector configurations illustrated)

1. 1A thru 4A = 1 Type A loop configuration in each lane.
2. 1B thru 4B = 1 Type B loop configuration in each lane.
3. 1C = 1 Type C loop configuration entering lanes as required.
4. 1D thru 4D = 1 Type D loop configuration in each lane.
5. 1E thru 4E = 1 Type E loop configuration in each lane.
6. 1Q thru 4Q = 1 Type Q loop configuration in each lane. (Use Type A, B, C, D, E or Q loop detector configurations only when specified or shown on plans)

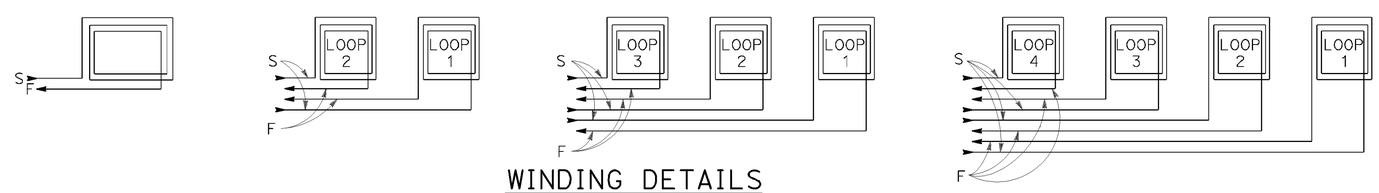

WINDING DETAILS

See Notes 6 and 7

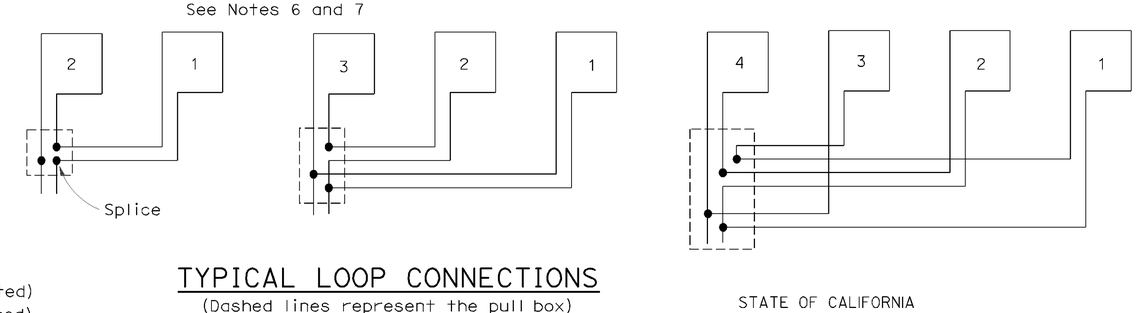

TYPICAL LOOP CONNECTIONS

(Dashed lines represent the pull box)

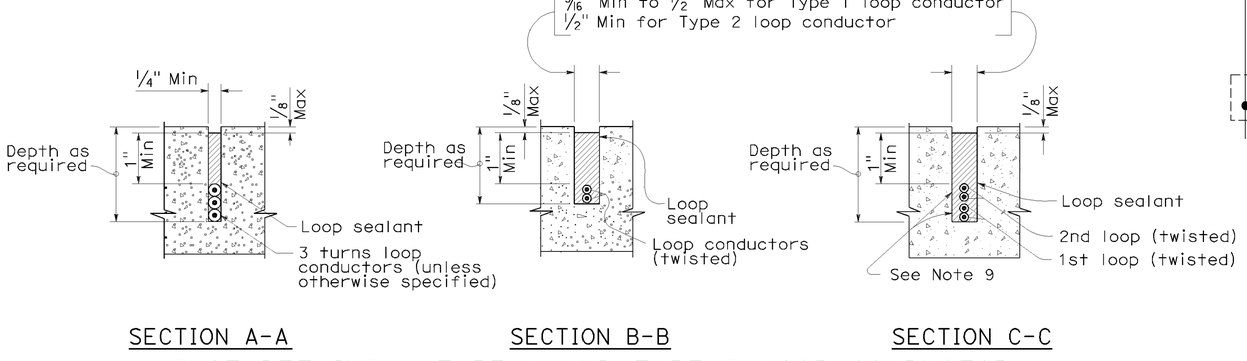

SECTION A-A | SECTION B-B | SECTION C-C

SLOT DETAILS - TYPE 1 AND TYPE 2 LOOP CONDUCTOR

STATE OF CALIFORNIA
DEPARTMENT OF TRANSPORTATION

ELECTRICAL SYSTEMS (DETECTORS)

NO SCALE

RSP ES-5A DATED OCTOBER 5, 2007 SUPERCEDES STANDARD PLAN ES-5A DATED MAY 1, 2006 - PAGE 423 OF THE STANDARD PLANS BOOK DATED MAY 2006.

REVISED STANDARD PLAN RSP ES-5A

DIST	COUNTY	ROUTE	POST MILES TOTAL PROJECT	SHEET NO.	TOTAL SHEETS
02	Plu	36	6.5/9.2	23	23

REGISTERED ELECTRICAL ENGINEER

January 20, 2012
PLANS APPROVAL DATE

REGISTERED PROFESSIONAL ENGINEER Jeffery G. McRae No. E14512 Exp. 6-30-12 ELECTRICAL STATE OF CALIFORNIA

The State of California or its officers or agents shall not be responsible for the accuracy or completeness of electronic copies of this plan sheet.

To accompany plans dated 03-08-12

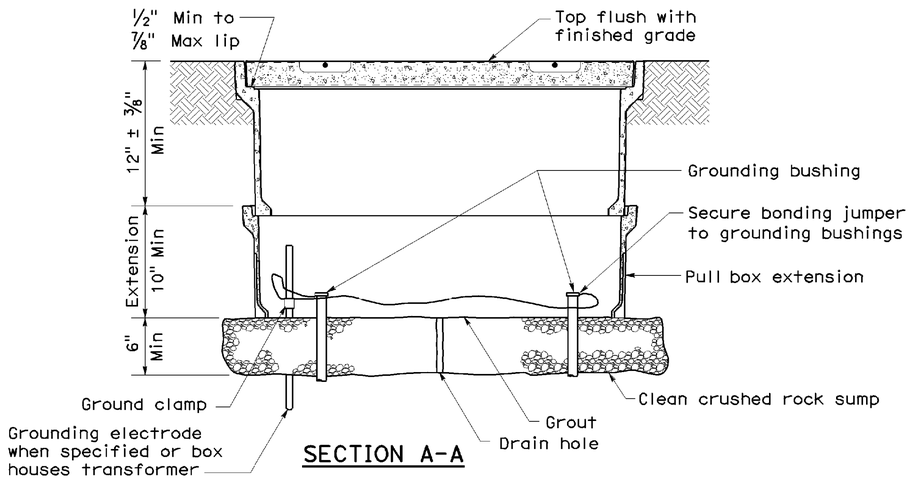

SECTION A-A

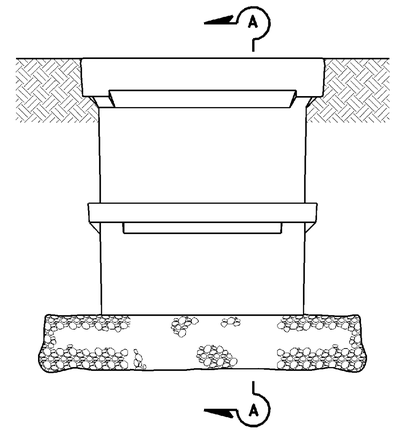

SIDE VIEW

INSTALLATION DETAILS

DETAIL A

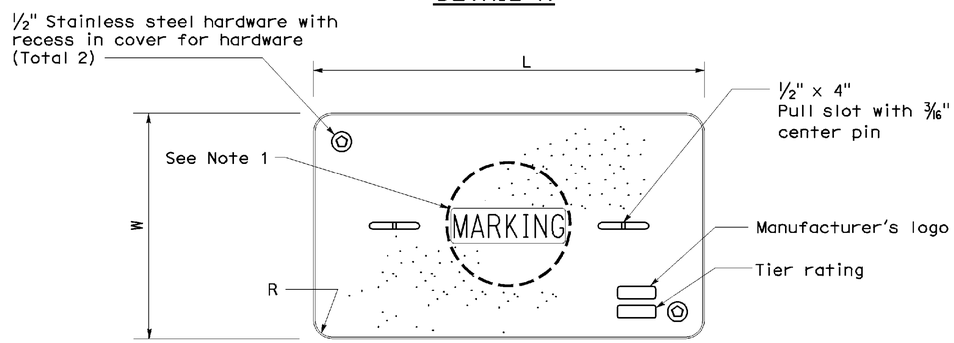

COVER TOP VIEW

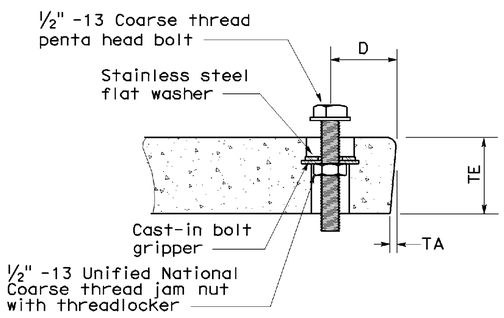

TYPICAL COVER CAPTIVE BOLT
(Or similar)

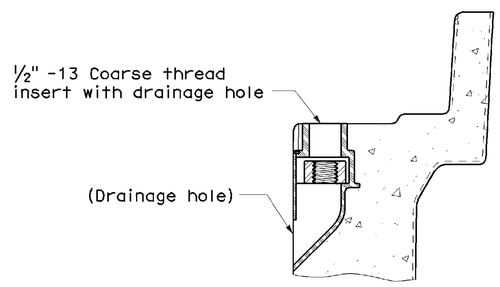

TYPICAL THREADED INSERT
(Or similar)

DIMENSION TABLE

PULL BOX	PULL BOX: Minimum Depth Box	PULL BOX: Minimum Depth Extension	PULL BOX: Maximum Weight	COVER: L	COVER: W	COVER: R	COVER: TE	COVER: TA	COVER: D	COVER: Maximum Weight
No. 3½	12"	N/A	40 lb	1′ - 3⅜"	10⅛"	1⅜"	2"	⅛"	1¾"	30 lb
No. 5	12"	10"	55 lb	1′ - 11¼"	1′ - 1¾"	1⅜"	2"	⅛"	1¾"	60 lb
No. 6	12"	10"	70 lb	2′ - 6½"	1′ - 5½"	1⅜"	2"	⅛"	2"	85 lb

NOTES ON PULL BOXES:

1. Pull box covers must be marked as follows: "SERVICE" Service circuits between service point and service disconnect; "SPRINKLER-CONTROL" sprinkler control circuits, 50 V or less; "CALTRANS" on all pull boxes, except pull boxes marked "SPRINKLER-CONTROL"; and "TELEPHONE" Telephone service;

   A) No. 3½ pull box.
      1) "SIGNAL" - Traffic signal circuits with or without street or sign lighting circuits.
      2) "ST LIGHTING" - Street or sign lighting circuits where voltage is under 600 V.

   B) No. 5, 6, 9 or 9A pull box.
      1) "TRAFFIC SIGNAL" - Traffic signal circuits with or without street or sign lighting circuits.
      2) "STREET LIGHTING" - Street or sign lighting circuits where voltage is under 600 V.
      3) "STREET LIGHTING-HIGH VOLTAGE" - Street or sign lighting circuits where voltage is above 600 V.
      4) "IRRIGATION" - Circuits to irrigation controller 120 V or more.
      5) "RAMP METER" - Ramp meter circuits.
      6) "COUNT STATION" - Count or speed monitor circuits.
      7) "COMMUNICATIONS" - Communication circuits.
      8) "TOS COMMUNICATIONS" - TOS communication line.
      9) "TOS POWER" -TOS power.
      10) "TDC POWER" - Telephone demarcation cabinet power.
      11) "CCTV" - Closed circuit television circuits.
      12) "TMS" - Traffic monitoring station circuits.
      13) "CMS" - Changeable message sign circuits.
      14) "HAR" - Highway advisory radio circuits.

2. The nominal dimensions of the opening in which the cover sets must be the same as the cover dimensions (L and W) plus ⅛" or greater.

3. Covers and boxes must be interchangeable with California Standard. When interchanged with a standard, the top surfaces must be flush within ⅛". Top outside radius of covers and pull boxes must have a ⅛" radius.

4. Pull box extension may be another pull box as long as the bottom edge of the pull box can fit into the cover opening.

STATE OF CALIFORNIA
DEPARTMENT OF TRANSPORTATION

ELECTRICAL SYSTEMS (PULL BOX)

NO SCALE

NSP ES-8A DATED JANUARY 20, 2012 SUPPLEMENTS THE STANDARD PLANS BOOK DATED MAY 2006.

NEW STANDARD PLAN NSP ES-8A

2006 NEW STANDARD PLAN NSP ES-8A

P:\proj1\02\5E210_plans\pse\25e210va009.dgn
USERNAME => s123119
DGN FILE => 25e210va009.dgn
DATE PLOTTED => 13-MAR-2012
TIME PLOTTED => 11:01
9-28-11