Dist	COUNTY	ROUTE	POST MILES TOTAL PROJECT	SHEET No.	TOTAL SHEETS
02	Sis	5	R10.7/R19.5	201	327

REGISTERED CIVIL ENGINEER 06-23-15 DATE

06-23-15
PLANS APPROVAL DATE

REGISTERED PROFESSIONAL ENGINEER TOBY J. CRAWFORD No. C71138 Exp. 6-30-17 CIVIL STATE OF CALIFORNIA

THE STATE OF CALIFORNIA OR ITS OFFICERS OR AGENTS SHALL NOT BE RESPONSIBLE FOR THE ACCURACY OR COMPLETENESS OF SCANNED COPIES OF THIS PLAN SHEET.

NOTE:

1. SEE SHEET PDD-1 FOR MILEPOST DETAILS.

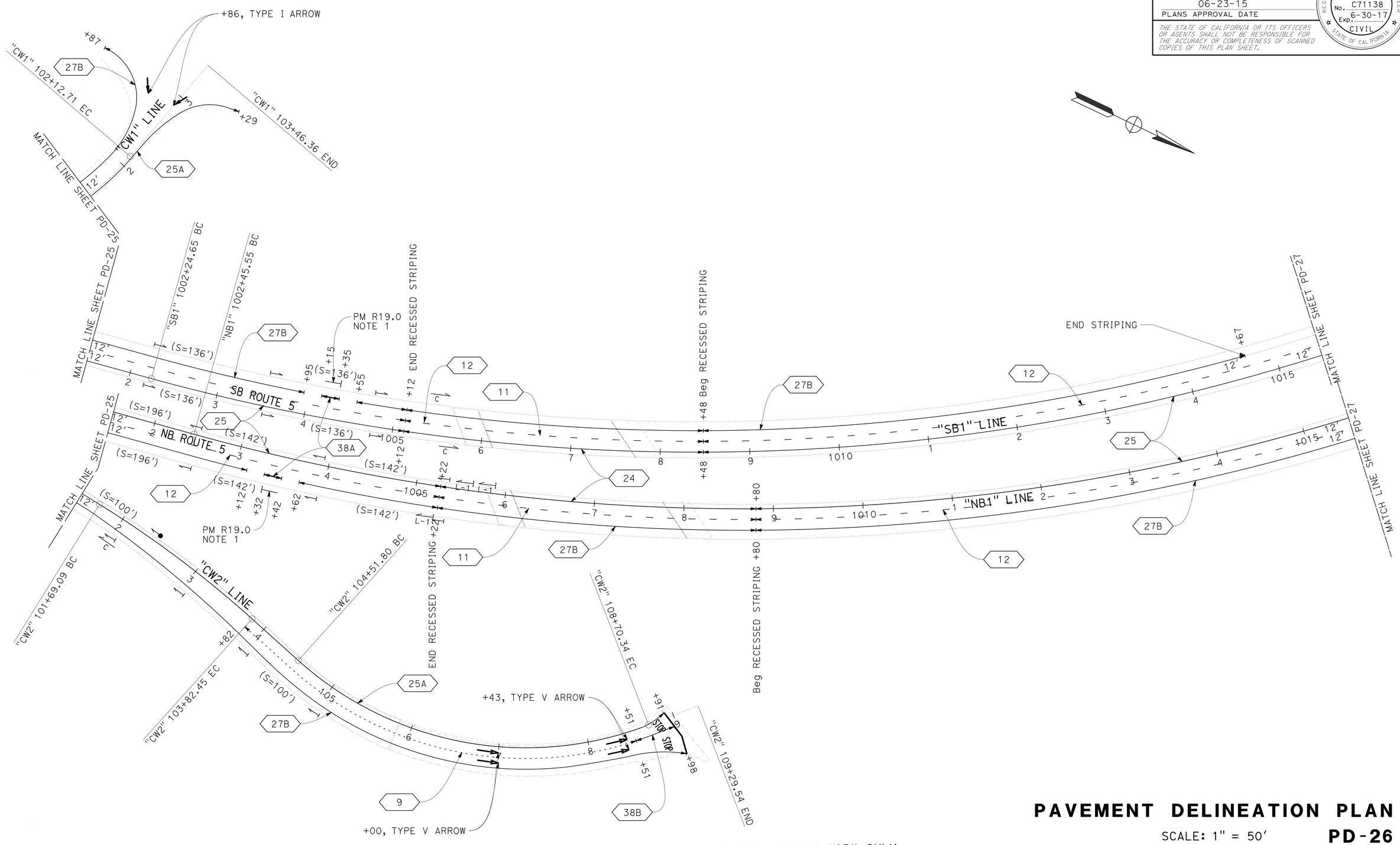

PAVEMENT DELINEATION PLAN

SCALE: 1" = 50'

PD-26

APPROVED FOR PAVEMENT DELINEATION WORK ONLY

REVISED BY	DATE REVISED

CALCULATED- WILL LESLIE
DESIGNED BY
CHECKED BY FRANK RIVAS
FUNCTIONAL SUPERVISOR STEVE TOPAL

STATE OF CALIFORNIA - DEPARTMENT OF TRANSPORTATION
Caltrans DESIGN

P:\proj1\02\40820_plans\pse\24g820na026.dgn

LAST REVISION DATE PLOTTED => 26-JUN-2015
TIME PLOTTED => 09:51

Dist	COUNTY	ROUTE	POST MILES TOTAL PROJECT	SHEET No.	TOTAL SHEETS
02	Sis	5	R10.7/R19.5	202	327

REGISTERED CIVIL ENGINEER 06-23-15 DATE

06-23-15
PLANS APPROVAL DATE

REGISTERED PROFESSIONAL ENGINEER
TOBY J. CRAWFORD
No. C71138
Exp. 6-30-17
CIVIL
STATE OF CALIFORNIA

THE STATE OF CALIFORNIA OR ITS OFFICERS OR AGENTS SHALL NOT BE RESPONSIBLE FOR THE ACCURACY OR COMPLETENESS OF SCANNED COPIES OF THIS PLAN SHEET.

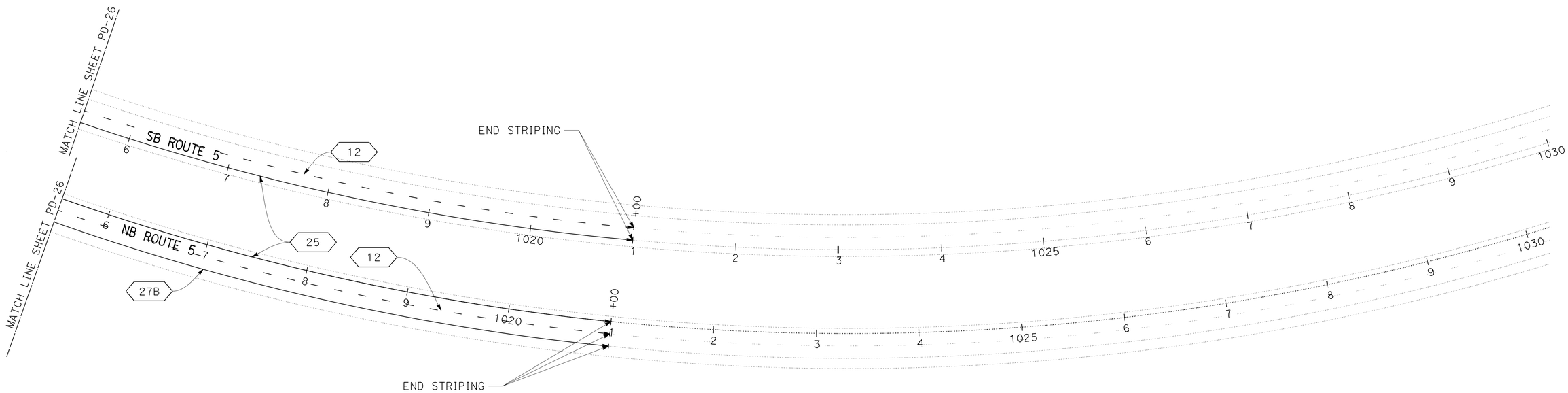

APPROVED FOR PAVEMENT DELINEATION WORK ONLY

PAVEMENT DELINEATION PLAN

SCALE: 1" = 50'

PD-27

REVISED BY	DATE REVISED

CALCULATED-DESIGNED BY: WILL LESLIE
CHECKED BY: FRANK RIVAS
FUNCTIONAL SUPERVISOR: STEVE TOPAL

STATE OF CALIFORNIA - DEPARTMENT OF TRANSPORTATION
Caltrans
DESIGN

P:\proj1\02\40820_plans\pse\24g820na027.dgn

LAST REVISION
DATE PLOTTED => 26-JUN-2015
TIME PLOTTED => 09:51

Dist	COUNTY	ROUTE	POST MILES TOTAL PROJECT	SHEET No.	TOTAL SHEETS
02	Sis	5	R10.7/R19.5	203	327

REGISTERED CIVIL ENGINEER 06-23-15 DATE

06-23-15
PLANS APPROVAL DATE

REGISTERED PROFESSIONAL ENGINEER TOBY J. CRAWFORD No. C71138 Exp. 6-30-17 CIVIL STATE OF CALIFORNIA

THE STATE OF CALIFORNIA OR ITS OFFICERS OR AGENTS SHALL NOT BE RESPONSIBLE FOR THE ACCURACY OR COMPLETENESS OF SCANNED COPIES OF THIS PLAN SHEET.

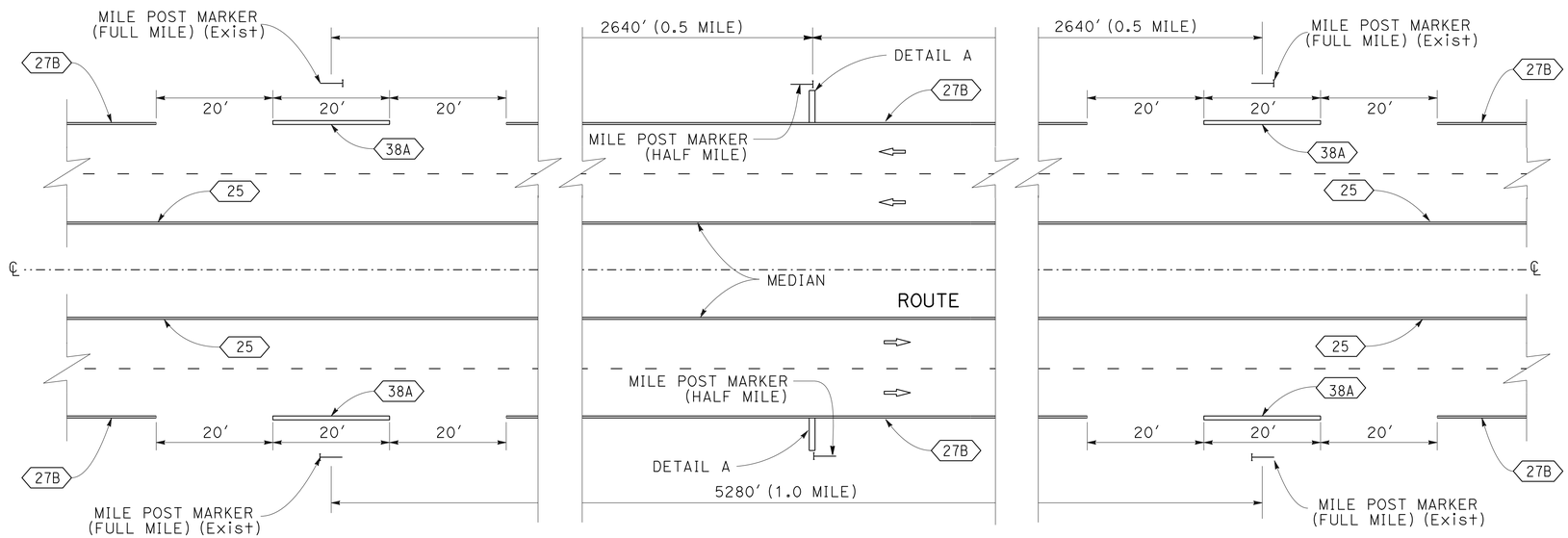

TYPICAL HALF MILE AND MILE POST STRIPE

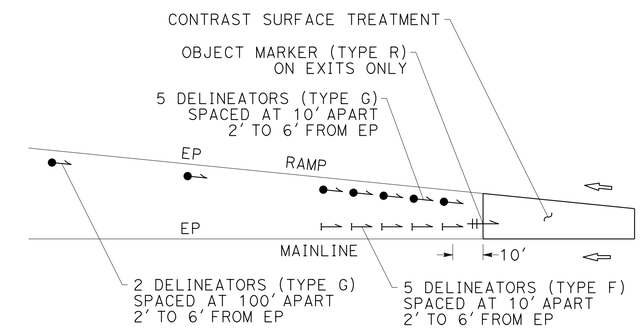

RAMP DELINEATORS

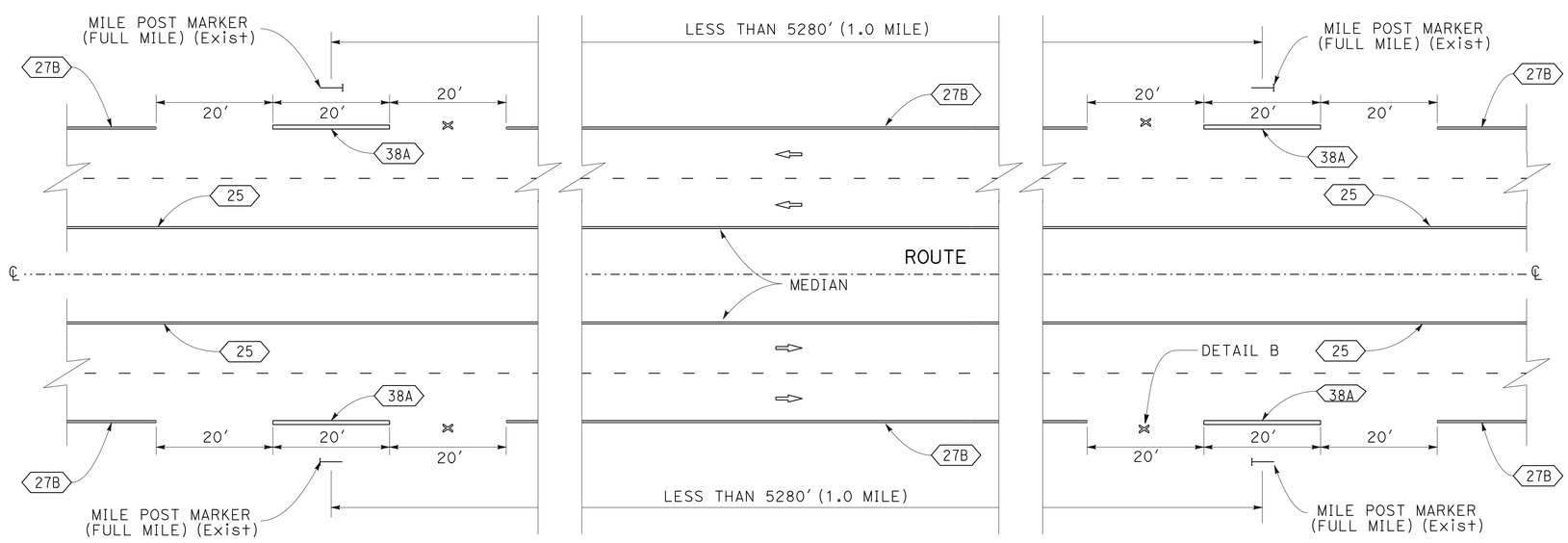

TYPICAL MILE POST STRIPE FOR EQUATIONS

(NO DETAIL A WITHIN AN EQUATION)

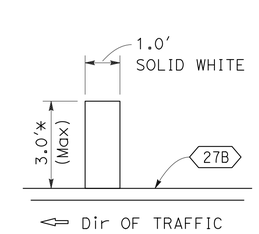

DETAIL A

* ACTUAL LENGTH MAY VARY DUE TO PAVEMENT WIDTH

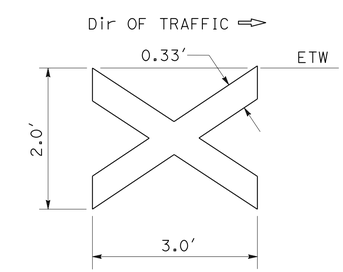

DETAIL B

0.33' SOLID WHITE THERMOPLASTIC

PAVEMENT DELINEATION DETAILS

NO SCALE

PDD-1

REVISED BY	DATE REVISED
WILL LESLIE	TOBY CRAWFORD
CALCULATED-DESIGNED BY	CHECKED BY
FUNCTIONAL SUPERVISOR	STEVE TOPAL

STATE OF CALIFORNIA - DEPARTMENT OF TRANSPORTATION

Caltrans® DESIGN

P:\proj1\02\4G820_plans\pse\24g820nb001.dgn

LAST REVISION 05-04-15 | DATE PLOTTED => 26-JUN-2015 | TIME PLOTTED => 09:51

Dist	COUNTY	ROUTE	POST MILES TOTAL PROJECT	SHEET No.	TOTAL SHEETS
02	Sis	5	R10.7/R19.5	204	327

REGISTERED CIVIL ENGINEER 06-23-15 DATE

06-23-15
PLANS APPROVAL DATE

REGISTERED PROFESSIONAL ENGINEER TOBY J. CRAWFORD No. C71138 Exp. 6-30-17 CIVIL STATE OF CALIFORNIA

THE STATE OF CALIFORNIA OR ITS OFFICERS OR AGENTS SHALL NOT BE RESPONSIBLE FOR THE ACCURACY OR COMPLETENESS OF SCANNED COPIES OF THIS PLAN SHEET.

TRAFFIC STRIPE AND PAVEMENT MARKER QUANTITIES

LINE	STATION	TWO-COMPONENT PAINT TRAFFIC STRIPE (RECESSED)									TWO-COMPONENT PAINT TRAFFIC STRIPE			PAVEMENT MARKER (RETROREFLECTIVE - RECESSED)			DESCRIPTION
		4" YELLOW		4" WHITE				8" WHITE			4" WHITE		4" YELLOW				
		DETAIL 25	DETAIL 25A	DETAIL 9	DETAIL 12	DETAIL 14A	DETAIL 27B	DETAIL 38	DETAIL 38A	DETAIL 38B	DETAIL 11	DETAIL 27B	DETAIL 24	TYPE C	TYPE G	TYPE H	
		LF	LF		LF	LF	LF	LF	LF	LF	LF	LF	LF	EA	EA	EA	
SB1	579+00.00 TO 599+50.00	2050			2050		2050		20						45	44	SB MAINLINE
	599+50.00 TO 602+11.00										261	261	261				SB WEIGH IN MOTION
	602+11.00 TO 649+58.00	4747			4747		4747		20						101	100	SB MAINLINE
	649+58.00 TO 655+22.00	564			564		564	382	380						31	13	SB NORTH M+ SHASTA OFF GORE
	655+22.00 TO 675+00.00	1978			1834	144	1978							4	40	42	SB MAINLINE
	675+00.00 TO 686+68.00	1168		328	1107	61	1167	277	278					2	44	25	SB ABRAMS LAKE ON GORE
	686+68.00 TO 705+60.00	1892			1809	83	1892		20					2	40	40	SB MAINLINE TRUCK CLIMBING
	705+60.00 TO 708+56.00	296			592		296								14	7	SB MAINLINE TRUCK CLIMBING
	708+56.00 TO 712+84.00	428			856			289	285						33	10	SB ABRAMS LAKE OFF GORE
	712+84.00 TO 798+66.00	8582			15,436	864	8582		40					24	324	180	SB MAINLINE TRUCK CLIMBING
	798+66.00 TO 804+72.00	606		302	648		604	371	371						38	14	SB TRUCK VILLAGE Dr ON GORE
	804+72.00 TO 810+14.00	542			542		542								13	12	SB MAINLINE
	810+14.00 TO 812+76.00										262	262	262				SB DEETZ Rd UC
	812+76.00 TO 828+45.00	1569			1569		1569								35	34	SB MAINLINE
	828+45.00 TO 833+06.00	461			461		466	262	271						24	11	SB TRUCK VILLAGE Dr OFF GORE
	833+06.00 TO 841+42.00	836			692	144	836							4	16	18	SB MAINLINE
	841+42.00 TO 844+31.00										289	289	289				SB BLACK BUTTE UC
	844+31.00 TO 864+98.00	2067			1959	108	2067		20					3	43	44	SB MAINLINE
	864+98.00 TO 900+48.00	3550			6380	360	3550		20					9	135	75	SB MAINLINE TRUCK CLIMBING
	900+48.00 TO 910+78.00	1030		302	2060		1012	218	218						61	22	SB SOUTH WEED ON GORE
	910+78.00 TO 920+06.00	928			1856		928								41	20	SB MAINLINE TRUCK CLIMBING
	920+06.00 TO 922+64.00										516	258	258				SB SOUTH WEED UC
	922+64.00 TO 932+25.00	961			1922		961								42	21	SB MAINLINE TRUCK CLIMBING
	932+25.00 TO 938+36.00	611			1222		623	357	347						43	14	SB SOUTH WEED OFF GORE
	938+36.00 TO 988+23.00	4987			8822	576	4987		20					16	186	105	SB MAINLINE TRUCK CLIMBING
	988+23.00 TO 991+64.00										682	341	341				SB SHASTINA Dr UC
	991+64.00 TO 993+00.00	136			272		136								8	4	SB MAINLINE TRUCK CLIMBING
	993+00.00 TO 997+64.00	464			464		473	470	468						32	11	SB CENTRAL WEED ON GORE
	997+64.00 TO 1005+12.00	748			748		748		20						18	17	SB MAINLINE
	1005+12.00 TO 1008+48.00										336	336	336				SB CENTRAL WEED UC
	1008+48.00 TO 1014+67.00	619			619		619								15	14	SB MAINLINE
	1014+67.00 TO 1021+00.00	633			633										15	14	SB MAINLINE
NB1	570+00.00 TO 598+29.00	2829			2829		2829		20						61	60	NB MAINLINE
	598+29.00 TO 600+90.00										261	261	261				NB WEIGH IN MOTION
	600+90.00 TO 620+86.00	1996			3992		1996								85	43	NB MAINLINE
	620+86.00 TO 643+00.00	2214			4428		2214		20						94	47	NB MAINLINE TRUCK CLIMBING
	643+00.00 TO 654+95.00	1195		331	1814	288		278	278					8	59	26	NB NORTH M+ SHASTA ON GORE
	654+95.00 TO 678+97.00	2402			4228	288	2402							8	90	51	NB MAINLINE TRUCK CLIMBING
	678+97.00 TO 683+05.00	408			816		408	270	270						31	10	NB ABRAMS LAKE OFF GORE
	683+05.00 TO 707+03.00	2398			4796		2398		20						102	51	NB MAINLINE TRUCK CLIMBING
SHEET TOTAL		55,895	0	1263	82,767	2916	53,644	3174	3406	0	2607	2008	2008	80	1959	1197	

PAVEMENT DELINEATION QUANTITIES

PDQ-1

REVISED BY | DATE REVISED
WILL LESLIE | FRANK RIVAS
CALCULATED-DESIGNED BY | CHECKED BY
FUNCTIONAL SUPERVISOR: STEVE TOPAL

STATE OF CALIFORNIA - DEPARTMENT OF TRANSPORTATION
Caltrans DESIGN

P:\proj1\02\4G820_plans\pse\24g820nc001.dgn

LAST REVISION | DATE PLOTTED => 26-JUN-2015 | TIME PLOTTED => 09:51

Dist	COUNTY	ROUTE	POST MILES TOTAL PROJECT	SHEET No.	TOTAL SHEETS
02	Sis	5	R10.7/R19.5	205	327

REGISTERED CIVIL ENGINEER 06-23-15 DATE

06-23-15
PLANS APPROVAL DATE

REGISTERED PROFESSIONAL ENGINEER TOBY J. CRAWFORD No. C71138 Exp. 6-30-17 CIVIL STATE OF CALIFORNIA

THE STATE OF CALIFORNIA OR ITS OFFICERS OR AGENTS SHALL NOT BE RESPONSIBLE FOR THE ACCURACY OR COMPLETENESS OF SCANNED COPIES OF THIS PLAN SHEET.

TRAFFIC STRIPE AND PAVEMENT MARKER QUANTITIES

LINE	STATION			TWO-COMPONENT PAINT TRAFFIC STRIPE (RECESSED)									TWO-COMPONENT PAINT TRAFFIC STRIPE			PAVEMENT MARKER (RETROREFLECTIVE - RECESSED)			DESCRIPTION
				4" YELLOW		4" WHITE				8" WHITE			4" WHITE		4" YELLOW				
				DETAIL 25	DETAIL 25A	DETAIL 9	DETAIL 12	DETAIL 14A	DETAIL 27B	DETAIL 38	DETAIL 38A	DETAIL 38B	DETAIL 11	DETAIL 27B	DETAIL 24	TYPE C	TYPE G	TYPE H	
				LF	LF		LF	LF	LF	LF	LF	LF	LF	LF	LF	EA	EA	EA	
NB1	707+03.00	TO	713+00.00	597		328	1194		597	373	264						50	13	NB ABRAMS LAKE ON GORE
	713+00.00	TO	749+65.00	3665			6754	288	3665		20					8	143	77	NB MAINLINE TRUCK CLIMBING
	749+65.00	TO	797+90.00	4825			4681	144	4825		20					4	100	102	NB MAINLINE
	797+90.00	TO	802+07.00	417			417		417	227	226						21	10	NB TRUCK VILLAGE Dr OFF GORE
	802+07.00	TO	809+12.00	705			705		705								17	16	NB MAINLINE
	809+12.00	TO	811+90.00										278	278	278				NB DEETZ Rd UC
	811+90.00	TO	825+43.00	1353			1353		1353								30	29	NB MAINLINE
	825+43.00	TO	831+88.00	645			645		645	640	641						15	14	NB TRUCK VILLAGE Dr ON GORE
	831+88.00	TO	840+90.00	902			1804		902								40	20	NB MAINLINE TRUCK CLIMBING
	840+90.00	TO	844+82.00										782	391	391				NB BLACK BUTTE OH
	844+82.00	TO	850+05.00	523			1046		523		20						24	12	NB MAINLINE TRUCK CLIMBING
	850+05.00	TO	904+22.00	5417			5129	288	5417		20					8	109	114	NB MAINLINE
	904+22.00	TO	908+04.00	382			382		390	258	256						22	9	NB SOUTH WEED OFF GORE
	908+04.00	TO	920+32.00	1228			1228		1228								28	27	NB MAINLINE
	920+32.00	TO	922+92.00										260	260	260				NB SOUTH WEED UC
	922+92.00	TO	930+14.00	722			722		722								17	16	NB MAINLINE
	930+14.00	TO	935+50.00	536		223	536		536	207	209						18	12	NB SOUTH WEED ON GORE
	935+50.00	TO	987+17.00	5167			5023	144	5167		20					4	107	109	NB MAINLINE
	987+17.00	TO	990+44.00										327	327	327				NB SHASTINA Dr UC
	990+44.00	TO	994+88.00	444			300	144	444							4	8	10	NB MAINLINE
	994+88.00	TO	998+99.00	411			411		411	267	267						23	10	NB CENTRAL WEED OFF GORE
	998+99.00	TO	1005+22.00	623			623		623								15	14	NB MAINLINE
	1005+22.00	TO	1008+80.00										353	353	353				NB CENTRAL WEED UC
	1008+80.00	TO	1021+00.00	1220			1220		1220								27	26	NB MAINLINE
NMS1	39+66.00	TO	49+56.00		991				995									42	SB NORTH Mt SHASTA OFF RAMP
AL1	86+68.00	TO	98+02.00		1119				1139									48	SB ABRAMS LAKE Rd ON RAMP
AL2	97+73.00	TO	108+55.00		1089				1104									46	SB ABRAMS LAKE Rd OFF RAMP
TV1	104+72.00	TO	111+19.00		658				696									28	SB TRUCK VILLAGE Dr ON RAMP
TV2	111+58.00	TO	128+42.00		1714				1724									72	SB TRUCK VILLAGE Dr OFF RAMP
SW1	10+70.18	TO	21+29.26		1069				1115									46	SB SOUTH WEED ON RAMP
SW2	20+94.87	TO	32+18.42		1132				1130									48	SB SOUTH WEED OFF RAMP
SW3	8+08.44	TO	21+57.72		1351	474			1358			48					17	57	NB SOUTH WEED ON RAMP
SW4	22+13.54	TO	31+19.71		904				935									39	NB SOUTH WEED OFF RAMP
CW1	94+90.96	TO	102+85.52		586				550									25	SB CENTERAL WEED ON RAMP
CW2	98+96.72	TO	108+93.80		995	479			1026			48					17	42	NB CENTRAL WEED OFF RAMP
SHEET TOTAL				29,782	11,608	1504	34,173	1008	41,562	1972	1963	96	2000	1609	1609	28	846	1134	
SUB TOTAL PDQ-1				55,895	0	1263	82,767	2916	53,644	3174	3406	0	2607	2008	2008	80	1959	1197	
SUB TOTAL				85,677	11,608	2767	116,940	3924	95,206	5146	5369	96	4607	3617	3617	108	2805	2332	
TOTAL				316,122						10,611			11,841			5245			

PAVEMENT DELINEATION QUANTITIES

NO SCALE **PDQ-2**

REVISED BY | DATE REVISED
WILL LESLIE | FRANK RIVAS
CALCULATED-DESIGNED BY | CHECKED BY
FUNCTIONAL SUPERVISOR | STEVE TOPAL

STATE OF CALIFORNIA - DEPARTMENT OF TRANSPORTATION
Caltrans® DESIGN

P:\proj\02\40820_plans\pse\24g820nc002.dgn

LAST REVISION | DATE PLOTTED => 26-JUN-2015 TIME PLOTTED => 09:51

Dist	COUNTY	ROUTE	POST MILES TOTAL PROJECT	SHEET No.	TOTAL SHEETS
02	Sis	5	R10.7/R19.5	206	327

REGISTERED CIVIL ENGINEER 06-23-15 DATE

06-23-15
PLANS APPROVAL DATE

REGISTERED PROFESSIONAL ENGINEER TOBY J. CRAWFORD No. C71138 Exp. 6-30-17 CIVIL STATE OF CALIFORNIA

THE STATE OF CALIFORNIA OR ITS OFFICERS OR AGENTS SHALL NOT BE RESPONSIBLE FOR THE ACCURACY OR COMPLETENESS OF SCANNED COPIES OF THIS PLAN SHEET.

TWO-COMPONENT PAINT PAVEMENT MARKINGS

SHEET No.	STATION	ELEMENT	AREA SQFT	NOTES
PD-7	"AL1" 97+28	TYPE I ARROW	25	SB ABRAMS LAKE ON RAMP
	"AL2" 97+75	STOP BAR	43	SB ABRAMS LAKE OFF RAMP
	"AL2" 97+83	STOP LEGEND	22	SB ABRAMS LAKE OFF RAMP
	"AL2" 98+21	TYPE V ARROW	33	SB ABRAMS LAKE OFF RAMP
	"AL2" 99+52	TYPE V ARROW	33	SB ABRAMS LAKE OFF RAMP
	"SB1" 705+67	TYPE VI ARROW	42	SB TRUCK CLIMBING LANE DROP
	"SB1" 707+64	TYPE VI ARROW	42	SB TRUCK CLIMBING LANE DROP
PD-8	"SB1" 709+62	TYPE VI ARROW	42	SB TRUCK CLIMBING LANE DROP
PD-10	"NB1" 745+56	TYPE VI ARROW	42	NB TRUCK CLIMBING LANE DROP
	"NB1" 747+56	TYPE VI ARROW	42	NB TRUCK CLIMBING LANE DROP
	"NB1" 749+50	TYPE VI ARROW	42	NB TRUCK CLIMBING LANE DROP
PD-15	"TV1" 110+75	TYPE I ARROW	25	SB TRUCK VILLAGE ON RAMP
	"TV2"111+36	STOP BAR	47	SB TRUCK VILLAGE OFF RAMP
	"TV2" 111+45	STOP LEGEND	22	SB TRUCK VILLAGE OFF RAMP
	"TV2" 111+73	TYPE V ARROW	33	SB TRUCK VILLAGE OFF RAMP
	"TV2" 112+92	TYPE V ARROW	33	SB TRUCK VILLAGE OFF RAMP
PD-17	"NB1"845+60	TYPE VI ARROW	42	NB TRUCK CLIMBING LANE DROP
	"NB1" 847+60	TYPE VI ARROW	42	NB TRUCK CLIMBING LANE DROP
	"NB1" 849+60	TYPE VI ARROW	42	NB TRUCK CLIMBING LANE DROP
	"SB1" 865+06	TYPE VI ARROW	42	SB TRUCK CLIMBING LANE DROP
PD-18	"SB1" 867+10	TYPE VI ARROW	42	SB TRUCK CLIMBING LANE DROP
	SB1" 869+10	TYPE VI ARROW	42	SB TRUCK CLIMBING LANE DROP
PD-21	"SW3" 19+42	TYPE V ARROW	33	NB SOUTH WEED OFF RAMP #1 LANE
	"SW3" 19+42	TYPE V ARROW	33	NB SOUTH WEED OFF RAMP #2 LANE
PD-22	"SW3" 21+12	TYPE V ARROW	33	NB SOUTH WEED OFF RAMP #1 LANE
	"SW3" 21+12	TYPE V ARROW	33	NB SOUTH WEED OFF RAMP #2 LANE
	"SW3"21+49	STOP LEGEND	22	NB SOUTH WEED OFF RAMP #1 LANE
	"SW3"21+49	STOP LEGEND	22	NB SOUTH WEED OFF RAMP #2 LANE
	"SW3" 21+58	STOP BAR	58	NB SOUTH WEED OFF RAMP
	"SW1" 20+80	TYPE I ARROW	25	SB SOUTH WEED ON RAMP
	"SW1" 20+80	TYPE I ARROW	25	SB SOUTH WEED ON RAMP
	"SW2" 20+86	STOP BAR	49	SB SOUTH WEED OFF RAMP
	"SW2" 19+94	STOP LEGEND	22	SB SOUTH WEED OFF RAMP
	"SW2" 21+16	TYPE V ARROW	33	SB SOUTH WEED OFF RAMP
	"SW2" 23+10	TYPE V ARROW	33	SB SOUTH WEED OFF RAMP
	"SW4" 22+50	TYPE I ARROW	25	NB SOUTH WEED ON RAMP
	"SW4" 22+50	TYPE I ARROW	25	NB SOUTH WEED ON RAMP
PD-26	"CW1" 102+86	TYPE I ARROW	25	SB CENTERAL WEED ON RAMP
	"CW1" 102+86	TYPE I ARROW	25	SB CENTERAL WEED ON RAMP
	"CW2" 107+00	TYPE V ARROW	33	NB CENTRAL WEED OFF RAMP #1 LANE
	"CW2" 107+00	TYPE V ARROW	33	NB CENTRAL WEED OFF RAMP #2 LANE
	"CW2"108+43	TYPE V ARROW	33	NB CENTRAL WEED OFF RAMP #1 LANE
	"CW2"108+43	TYPE V ARROW	33	NB CENTRAL WEED OFF RAMP #2 LANE
	"CW2" 108+83	STOP LEGEND	22	NB CENTRAL WEED OFF RAMP #1 LANE
	"CW2" 108+83	STOP LEGEND	22	NB CENTRAL WEED OFF RAMP #2 LANE
	"CW2" 108+91	STOP BAR	53	NB CENTRAL WEED OFF RAMP
Var	"SB1", "NB1"	HALF MILE TICK	42	
	"SB1", "NB1"	EQUATION "X"	8	
TOTAL			1620	

OBJECT MARKER

LINE	STATION	OBJECT MARKER (TYPE L-1)	OBJECT MARKER (TYPE P)	OBJECT MARKER (TYPE R)
		EA	EA	EA
"SB1"	637+59	1		
	638+00	1		
	638+65	1		
	639+21	1		
	640+06	1		
	649+58			1
	682+80	1		
	708+56			1
	812+10	1		
	812+11	1		
	812+32	1		
	812+97	1		
	828+45			1
	832+24			1
	844+00	1		
	844+08	1		
	844+34	1		
	844+84	1		
	922+00	2		
	922+23	1		
	922+83	1		
	990+61	1		
	990+82	1		
	991+89		1	
"NB1"	903+44	1		
	908+05			1
	920+12	1		
	920+73	1		
	920+96	1		
	920+98	1		
	986+84	1		
	987+94	1		
	988+16	1		
	994+48	1		
	998+99			1
	1005+24	1		
	1005+63	1		
	1005+88	1		
TOTAL		32	1	6

MILEPOST MARKER

LINE	STATION	PM	EA
"SB1"	581+85.35	11	1
	608+25.35	11.5	1
	634+65.35	12	1
	661+05.35	12.5	1
	687+45.35	13	1
	713+85.35	13.5	1
	740+25.35	14	1
	766+65.35	14.5	1
	793+05.35	15	1
	802+92.74	15.165	1
	802+92.74	15.187	1
	819+45.38	15.5	1
	845+85.38	16	1
	872+25.38	16.5	1
	898+65.38	17	1
	925+05.38	17.5	1
	951+45.38	18	1
	977+85.38	18.5	1
	1004+25.38	19	1
"NB1"	582+18.30	11	1
	608+58.30	11.5	1
	634+98.30	12	1
	661+38.30	12.5	1
	687+78.30	13	1
	714+18.30	13.5	1
	740+58.30	14	1
	766+98.30	14.5	1
	793+38.30	15	1
	802+09.50	15.165	1
	802+09.50	15.187	1
	818+62.14	15.5	1
	845+02.14	16	1
	871+42.14	16.5	1
	897+82.14	17	1
	924+22.14	17.5	1
	950+62.14	18	1
	977+02.14	18.5	1
	1003+42.14	19	1
TOTAL			38

DELINEATORS

SHEET No.	DELINEATOR (CLASS 2) TYPE F	DELINEATOR (CLASS 2) TYPE G
	EA	EA
PD-2	4	
PD-3	14	
PD-4	37	7
PD-5	12	
PD-6	23	7
PD-7	25	7
PD-8	16	
PD-9	6	
PD-10	16	
PD-11	12	
PD-12	20	
PD-13	14	
PD-14	25	7
PD-15	24	
PD-16	27	7
PD-17	40	
PD-18	14	
PD-19	20	
PD-20	42	
PD-21	58	14
PD-22	54	9
PD-23	85	3
PD-24	73	
PD-25	56	11
PD-26	14	1
SUBTOTAL	731	73
TOTAL		804

PAVEMENT DELINEATION QUANTITIES

PDQ-3

REVISED BY | DATE REVISED
WILL LESLIE | FRANK RIVAS
CALCULATED-DESIGNED BY | CHECKED BY
FUNCTIONAL SUPERVISOR | STEVE TOPAL

STATE OF CALIFORNIA - DEPARTMENT OF TRANSPORTATION
Caltrans® DESIGN

P:\proj1\02\4g820_plans\pse\24g820nc003.dgn

LAST REVISION | DATE PLOTTED => 26-JUN-2015 TIME PLOTTED => 09:51

Dist	COUNTY	ROUTE	POST MILES TOTAL PROJECT	SHEET No.	TOTAL SHEETS
02	Sis	5	R10.7/R19.5	207	327

REGISTERED CIVIL ENGINEER 06-23-15 DATE

06-23-15
PLANS APPROVAL DATE

REGISTERED PROFESSIONAL ENGINEER TOBY J. CRAWFORD No. C71138 Exp. 6-30-17 CIVIL STATE OF CALIFORNIA

THE STATE OF CALIFORNIA OR ITS OFFICERS OR AGENTS SHALL NOT BE RESPONSIBLE FOR THE ACCURACY OR COMPLETENESS OF SCANNED COPIES OF THIS PLAN SHEET.

CULVERT MARKERS

ALIGNMENT	STATION	POST MILE	LEFT	RIGHT	MARKER (CULVERT) EA
"SB1"	611+88	R11.57	X		1
"SB1"	613+73	R11.60	X		1
"SB1"	624+74	R11.81	X		1
"SB1"	624+74	R11.81		X	1
"SB1"	640+79	R12.12	X		1
"SB1"	641+17	R12.12		X	1
"SB1"	667+70	R12.62		X	1
"SB1"	667+96	R12.63	X		1
"SB1"	677+52	R12.81	X		1
"SB1"	677+52	R12.81		X	1
"AL1"	85+90	R12.97	X		1
"SB1"	686+80	R12.99	X		1
"SB1"	687+67	R13.00		X	1
"SB1"	795+70	R15.05	X		1
"SB1"	795+70	R15.05		X	1
"TV2"	119+96	R15.51	X		1
"TV2"	119+97	R15.51		X	1
"SB1"	887+42	R16.79		X	1
"SB1"	887+42	R16.79	X		1
"SB1"	920+56	R17.41	X		1
"SW2"	25+66	R17.52	X		1
"NB1"	930+54	R17.60	X		1
"SB1"	931+05	R17.61		X	1
"SB1"	931+22	R17.62	X		1
"SW2"	31+57	R17.62	X		1
"SB1"	932+00	R17.63	X		1
"NB1"	938+07	R17.75	X		1
"SB1"	938+47	R17.75	X		1
"NB1"	942+47	R17.83		X	1
"SB1"	944+00	R17.86	X		1
				SUBTOTAL	30

CULVERT MARKERS (CONTINUED)

ALIGNMENT	STATION	POST MILE	LEFT	RIGHT	MARKER (CULVERT) EA
"NB1"	946+12	R17.90	X		1
"SB1"	949+88	R17.97	X		1
"SB1"	953+38	R18.04		X	1
"SB1"	953+38	R18.04	X		1
"NB1"	960+01	R18.16	X		1
"SB1"	960+98	R18.18	X		1
"NB1"	965+05	R18.26	X		1
"SB1"	965+85	R18.27	X		1
"SB1"	972+17	R18.39	X		1
"NB1"	974+04	R18.43	X		1
"SB1"	982+69	R18.59		X	1
"SB1"	982+69	R18.59	X		1
"NB1"	988+25	R18.70	X		1
"NB1"	994+80	R18.82		X	1
"NB1"	995+07	R18.82	X		1
"CW2"	98+61	R18.89		X	1
"NB1"	999+20	R18.90	X		1
"CW2"	99+86	R18.91		X	1
"CW2"	101+24	R18.94		X	1
"CW2"	101+98	R18.95		X	1
"SB1"	1005+42	R19.02	X		1
"SB1"	1005+67	R19.03		X	1
				SUBTOTAL	22
				TOTAL	52

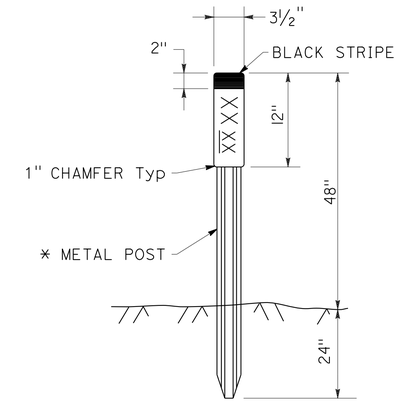

* SEE STANDARD PLAN A73B FOR METAL POST DETAILS

CULVERT MARKER

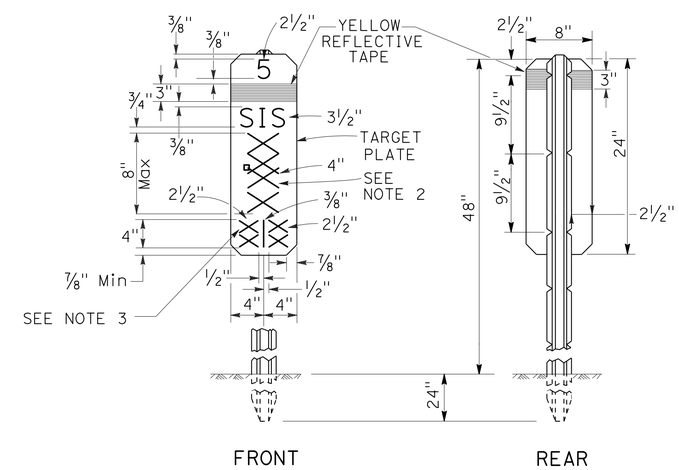

NOTES:

1. THE MARKER SHALL BE WHITE (NON-REFLECTIVE) TARGET PLATE WITH BLACK SERIES D NUMERALS AND LETTERS.
2. A POST MILE PREFIX, SUCH AS "R" OR "M", SHALL APPLY ONLY WHEN DIRECTED BY THE ENGINEER.
3. "BK" (BACK), "AH" (AHEAD), OR A BLANK SPACE SHALL APPLY AS DIRECTED BY THE ENGINEER.
4. ALL INFORMATION SHALL BE IN ENGLISH UNITS (MILES).

MILEPOST MARKER DETAIL

PAVEMENT DELINEATION QUANTITIES

NO SCALE

PDQ-4

REVISED BY | DATE REVISED
WILL LESLIE | FRANK RIVAS
CALCULATED-DESIGNED BY | CHECKED BY
FUNCTIONAL SUPERVISOR | STEVE TOPAL

STATE OF CALIFORNIA - DEPARTMENT OF TRANSPORTATION
Caltrans
DESIGN

P:\proj1\02\40820_plans\pse\24g820nc004.dgn

LAST REVISION | DATE PLOTTED => 26-JUN-2015 | TIME PLOTTED => 09:51

Dist	COUNTY	ROUTE	POST MILES TOTAL PROJECT	SHEET No.	TOTAL SHEETS
02	Sis	5	R10.7/R19.5	208	327

REGISTERED CIVIL ENGINEER 06-23-15 DATE

06-23-15
PLANS APPROVAL DATE

REGISTERED PROFESSIONAL ENGINEER THERESA ANDERSON No. C77957 Exp. 6-30-17 CIVIL STATE OF CALIFORNIA

THE STATE OF CALIFORNIA OR ITS OFFICERS OR AGENTS SHALL NOT BE RESPONSIBLE FOR THE ACCURACY OR COMPLETENESS OF SCANNED COPIES OF THIS PLAN SHEET.

NOTES:

1. FOR ACCURATE RIGHT OF WAY DATA, CONTACT RIGHT OF WAY ENGINEERING AT THE DISTRICT OFFICE.
2. CALIFORNIA SIGN CODES DESIGNATED BY (CA) OTHERWISE FEDERAL MUTCD CODES ARE SHOWN.
3. FINAL SIGN PLACEMENTS AS DIRECTED BY ENGINEER.

LEGEND

- REMOVE ROADSIDE SIGN
- EXISTING ROADSIDE SIGN (2-POST)
- NEW ROADSIDE SIGN (2-POST)
- EXISTING OVERHEAD SIGN
- NEW OVERHEAD SIGN
- OVERHEAD SIGN NUMBER
- ROADSIDE SIGN NUMBER

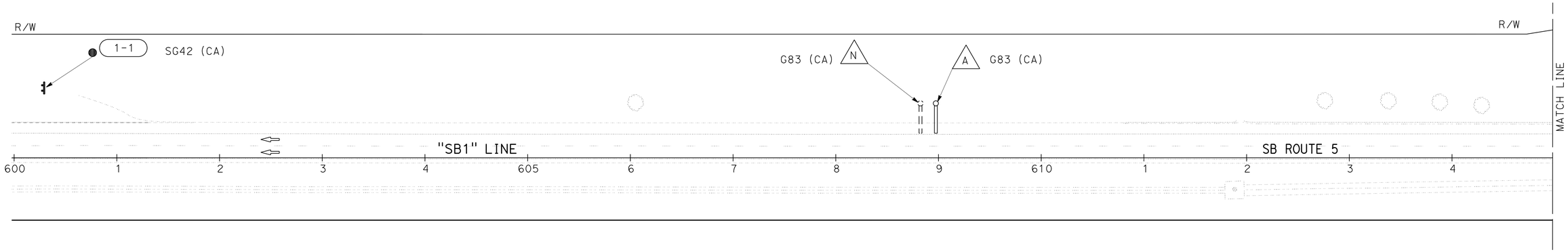

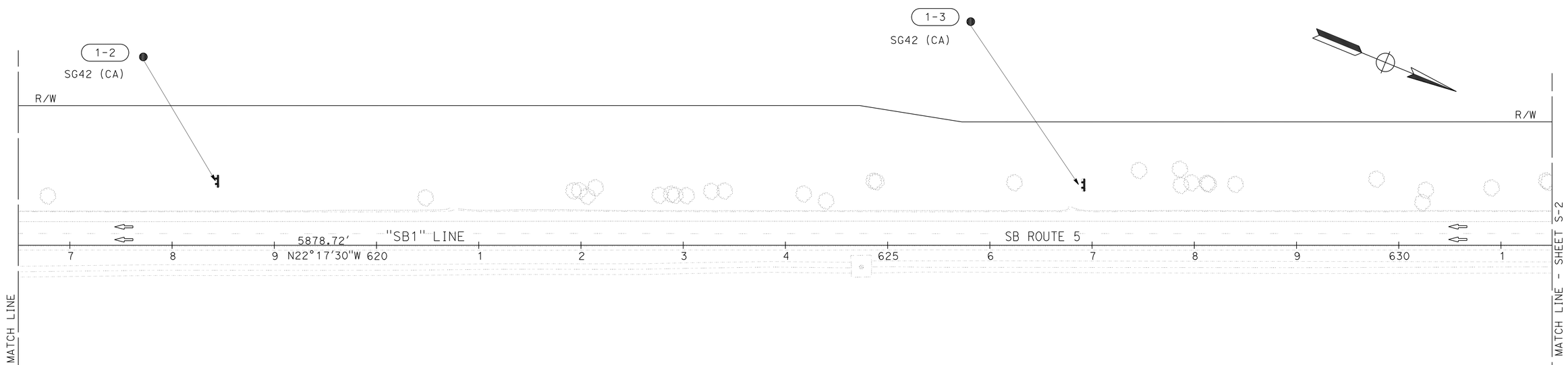

SIGN PLAN

SCALE: 1" = 50'

S-1

APPROVED FOR SIGN WORK ONLY

REVISED BY | DATE REVISED
TERI ANDERSON | FRANK RIVAS
CALCULATED-DESIGNED BY | CHECKED BY
FUNCTIONAL SUPERVISOR: ROB STINGER

STATE OF CALIFORNIA - DEPARTMENT OF TRANSPORTATION
Caltrans® DESIGN

P:\proj1\02\4G820_plans\pse\24g820oa001.dgn

LAST REVISION 06-23-15 | DATE PLOTTED => 26-JUN-2015 TIME PLOTTED => 09:51

Dist	COUNTY	ROUTE	POST MILES TOTAL PROJECT	SHEET No.	TOTAL SHEETS
02	Sis	5	R10.7/R19.5	209	327

REGISTERED CIVIL ENGINEER 06-23-15 DATE

06-23-15
PLANS APPROVAL DATE

REGISTERED PROFESSIONAL ENGINEER THERESA ANDERSON No. C77957 Exp. 6-30-17 CIVIL STATE OF CALIFORNIA

THE STATE OF CALIFORNIA OR ITS OFFICERS OR AGENTS SHALL NOT BE RESPONSIBLE FOR THE ACCURACY OR COMPLETENESS OF SCANNED COPIES OF THIS PLAN SHEET.

NOTE:

1. FOR ACCURATE RIGHT OF WAY DATA, CONTACT RIGHT OF WAY ENGINEERING AT THE DISTRICT OFFICE.

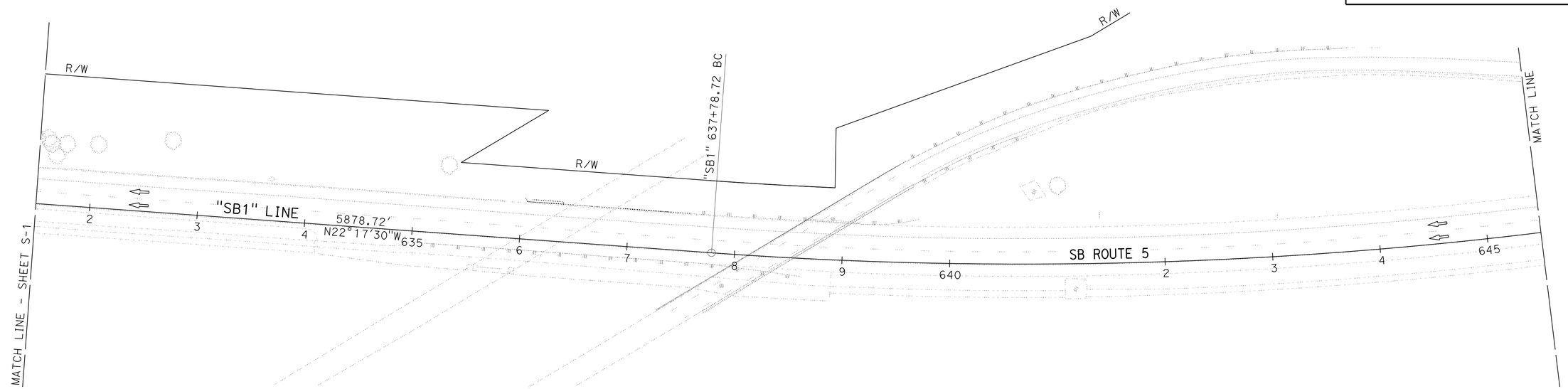

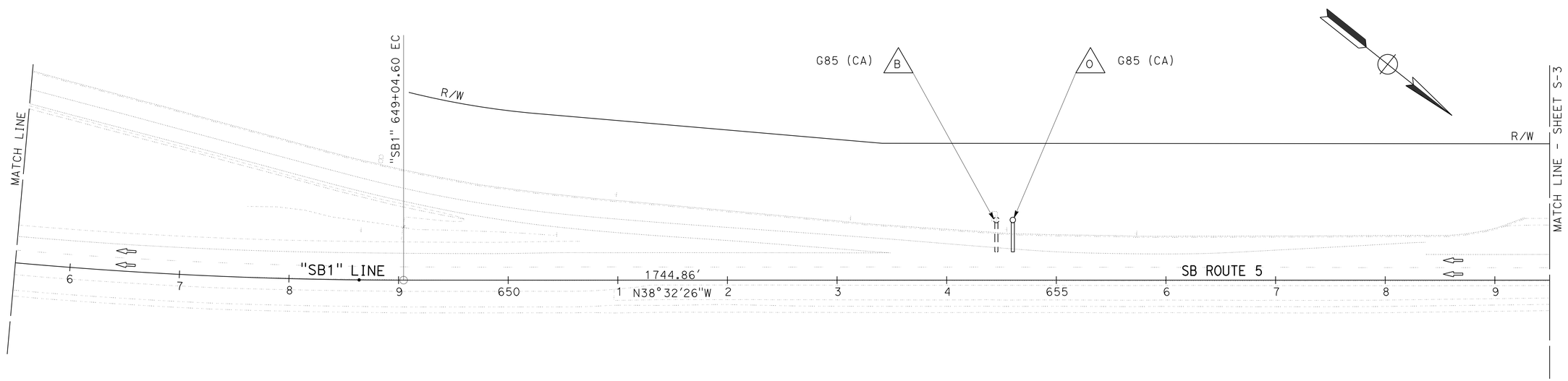

SIGN PLAN

SCALE: 1" = 50'

S-2

APPROVED FOR SIGN WORK ONLY

STATE OF CALIFORNIA - DEPARTMENT OF TRANSPORTATION

Caltrans

DESIGN

FUNCTIONAL SUPERVISOR: ROB STINGER

CALCULATED-DESIGNED BY: TERI ANDERSON

CHECKED BY: FRANK RIVAS

REVISED BY

DATE REVISED

P:\proj1\02\40820_plans\pse\24g820oa002.dgn

LAST REVISION 06-23-15 | DATE PLOTTED => 26-JUN-2015 | TIME PLOTTED => 09:51

Dist	COUNTY	ROUTE	POST MILES TOTAL PROJECT	SHEET No.	TOTAL SHEETS
02	Sis	5	R10.7/R19.5	210	327

REGISTERED CIVIL ENGINEER 06-23-15 DATE

06-23-15
PLANS APPROVAL DATE

REGISTERED PROFESSIONAL ENGINEER THERESA ANDERSON No. C77957 Exp. 6-30-17 CIVIL STATE OF CALIFORNIA

THE STATE OF CALIFORNIA OR ITS OFFICERS OR AGENTS SHALL NOT BE RESPONSIBLE FOR THE ACCURACY OR COMPLETENESS OF SCANNED COPIES OF THIS PLAN SHEET.

NOTE:

1. FOR ACCURATE RIGHT OF WAY DATA, CONTACT RIGHT OF WAY ENGINEERING AT THE DISTRICT OFFICE.

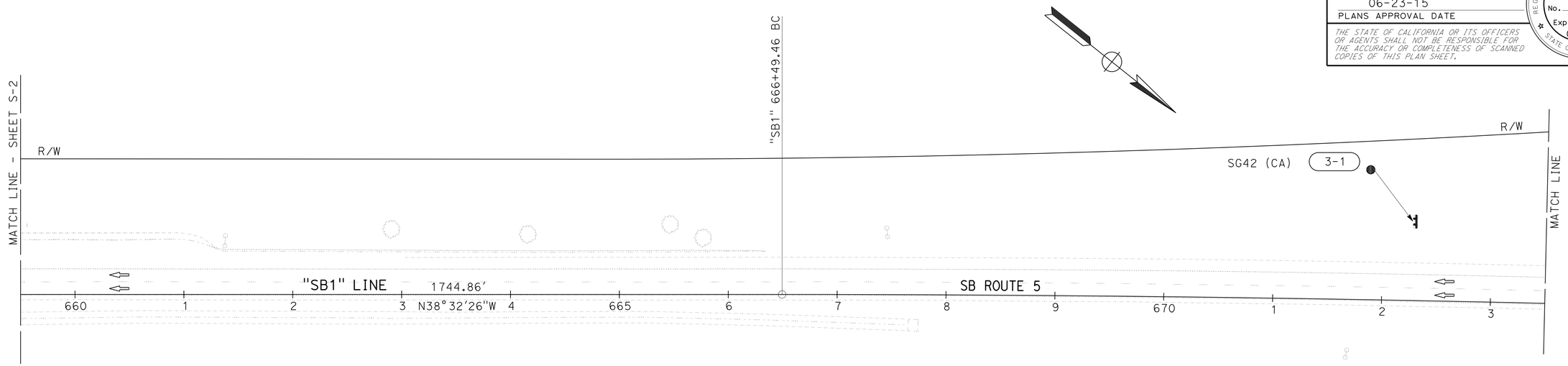

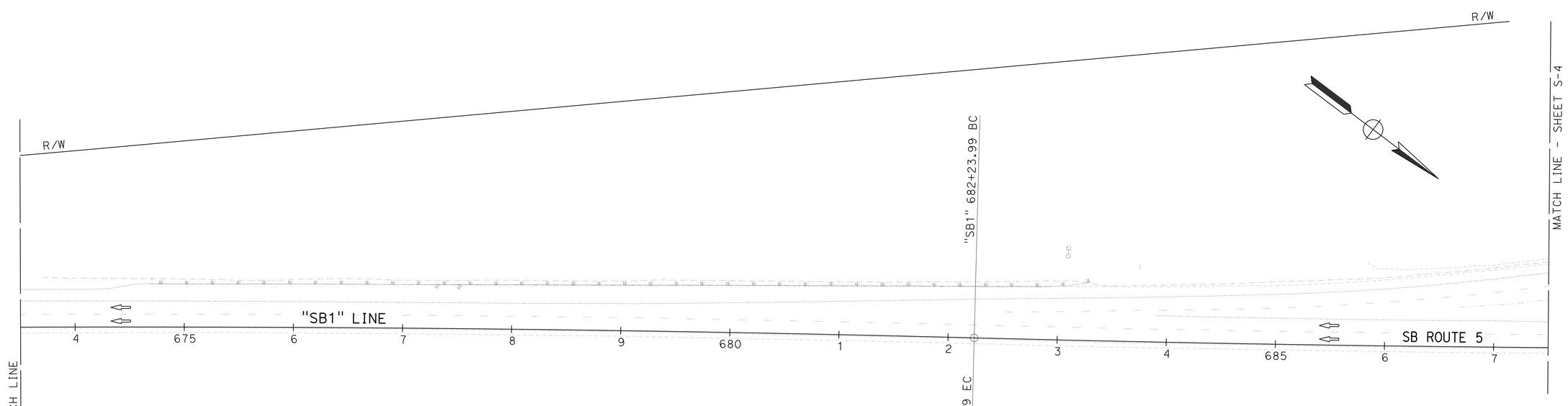

SIGN PLAN

SCALE: 1" = 50'

S-3

APPROVED FOR SIGN WORK ONLY

REVISED BY | DATE REVISED

TERI ANDERSON | FRANK RIVAS

CALCULATED-DESIGNED BY | CHECKED BY

FUNCTIONAL SUPERVISOR: ROB STINGER

STATE OF CALIFORNIA - DEPARTMENT OF TRANSPORTATION

Caltrans® **DESIGN**

P:\proj1\02\4G820_plans\pse\24g820oa003.dgn

LAST REVISION 06-23-15 | DATE PLOTTED => 26-JUN-2015 | TIME PLOTTED => 09:51

Dist	COUNTY	ROUTE	POST MILES TOTAL PROJECT	SHEET No.	TOTAL SHEETS
02	Sis	5	R10.7/R19.5	211	327

06-23-15
REGISTERED CIVIL ENGINEER DATE

06-23-15
PLANS APPROVAL DATE

REGISTERED PROFESSIONAL ENGINEER
THERESA ANDERSON
No. C77957
Exp. 6-30-17
CIVIL
STATE OF CALIFORNIA

THE STATE OF CALIFORNIA OR ITS OFFICERS OR AGENTS SHALL NOT BE RESPONSIBLE FOR THE ACCURACY OR COMPLETENESS OF SCANNED COPIES OF THIS PLAN SHEET.

NOTE:

1. FOR ACCURATE RIGHT OF WAY DATA, CONTACT RIGHT OF WAY ENGINEERING AT THE DISTRICT OFFICE.

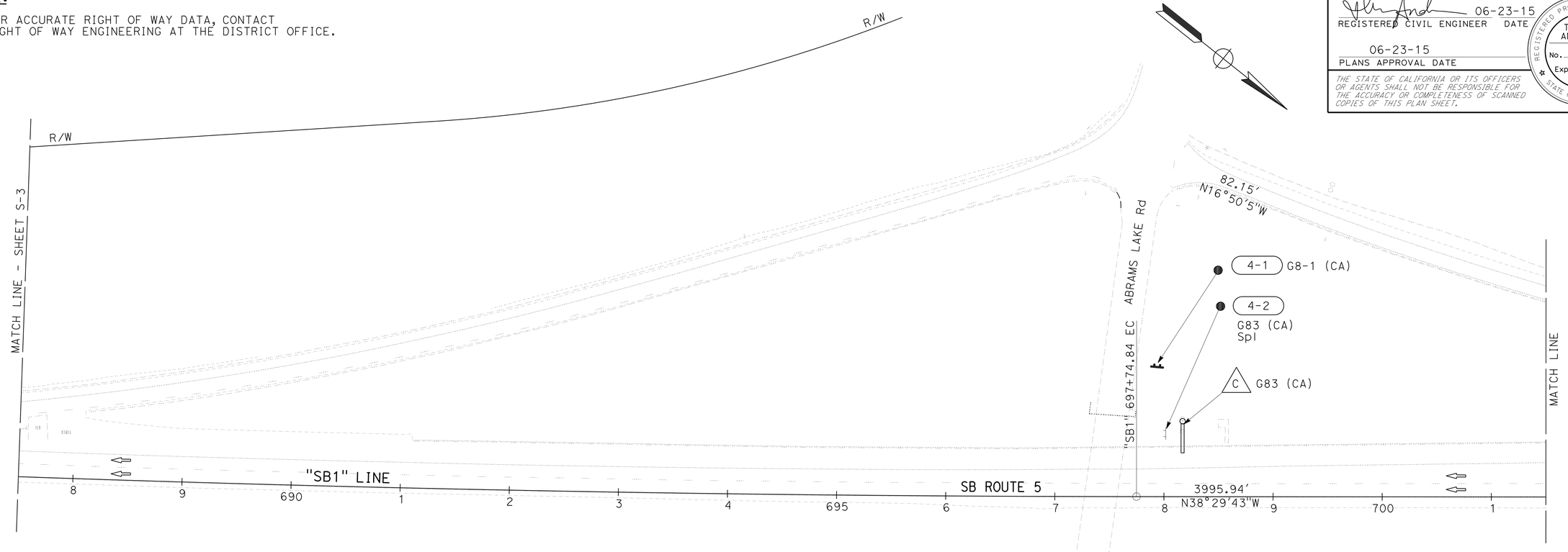

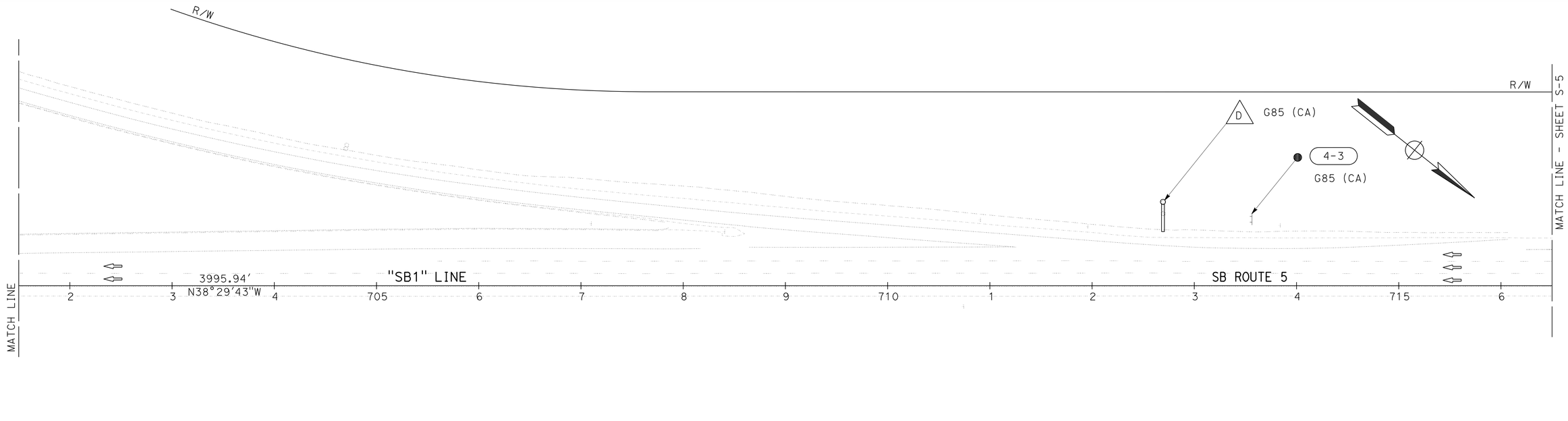

APPROVED FOR SIGN WORK ONLY

SIGN PLAN

SCALE: 1" = 50'

S-4

REVISED BY	DATE REVISED

CALCULATED-DESIGNED BY	TERI ANDERSON
CHECKED BY	FRANK RIVAS

FUNCTIONAL SUPERVISOR: ROB STINGER

STATE OF CALIFORNIA - DEPARTMENT OF TRANSPORTATION

Caltrans®

DESIGN

P:\proj\02\4G820_plans\pse\24g820oa004.dgn

LAST REVISION 06-23-15 | DATE PLOTTED => 26-JUN-2015 | TIME PLOTTED => 09:51

Dist	COUNTY	ROUTE	POST MILES TOTAL PROJECT	SHEET No.	TOTAL SHEETS
02	Sis	5	R10.7/R19.5	212	327

REGISTERED CIVIL ENGINEER 06-23-15 DATE

06-23-15
PLANS APPROVAL DATE

REGISTERED PROFESSIONAL ENGINEER THERESA ANDERSON No. C77957 Exp. 6-30-17 CIVIL STATE OF CALIFORNIA

THE STATE OF CALIFORNIA OR ITS OFFICERS OR AGENTS SHALL NOT BE RESPONSIBLE FOR THE ACCURACY OR COMPLETENESS OF SCANNED COPIES OF THIS PLAN SHEET.

NOTE:

1. FOR ACCURATE RIGHT OF WAY DATA, CONTACT RIGHT OF WAY ENGINEERING AT THE DISTRICT OFFICE.

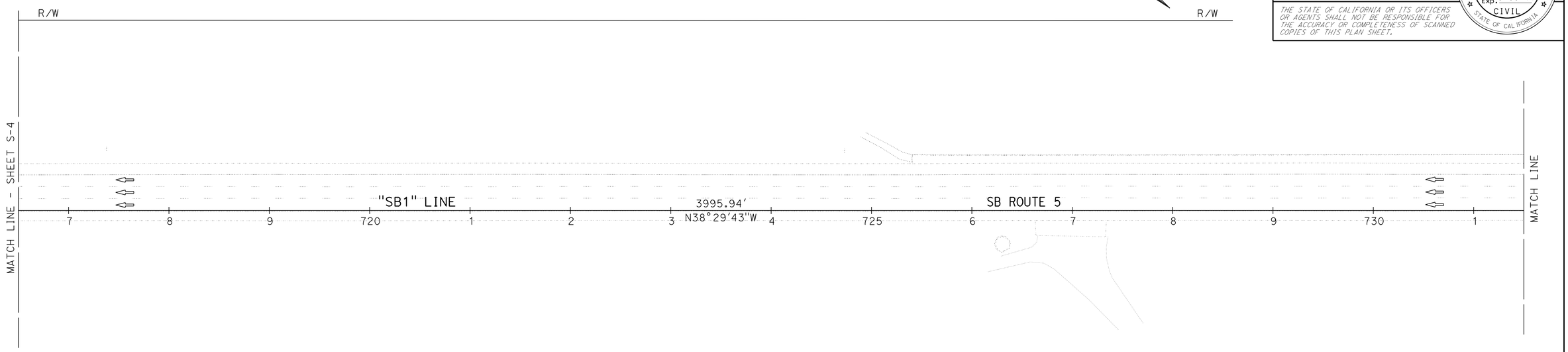

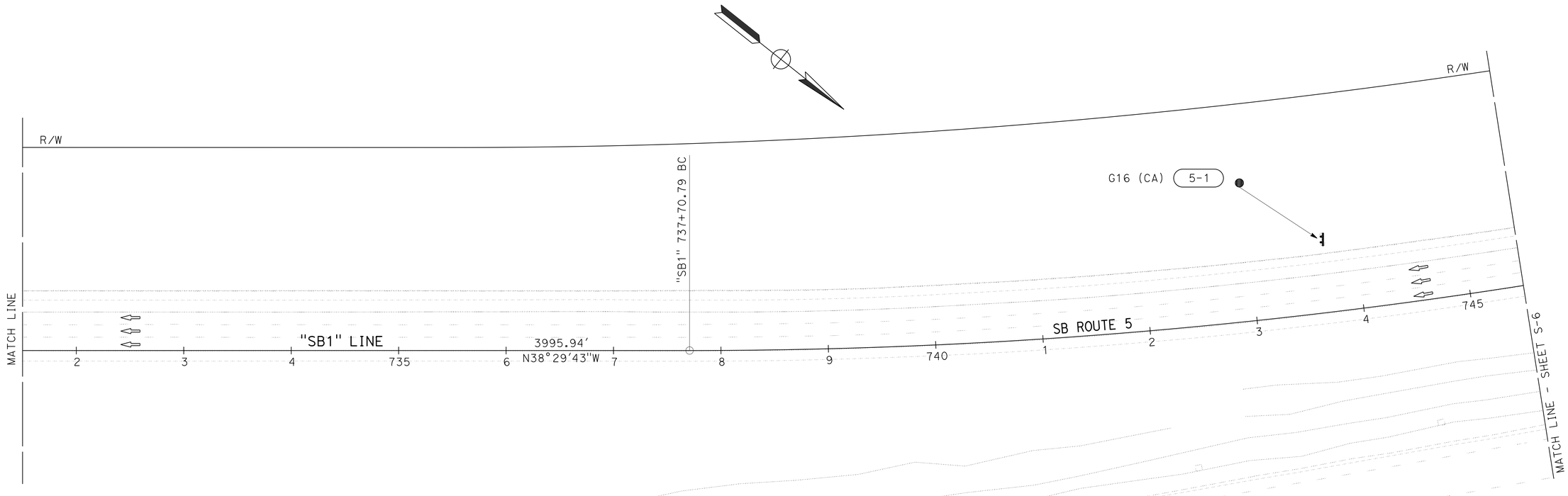

SIGN PLAN

SCALE: 1" = 50'

S-5

APPROVED FOR SIGN WORK ONLY

REVISED BY	DATE REVISED
TERI ANDERSON	FRANK RIVAS

CALCULATED-DESIGNED BY / CHECKED BY

FUNCTIONAL SUPERVISOR: ROB STINGER

STATE OF CALIFORNIA - DEPARTMENT OF TRANSPORTATION

Caltrans®

DESIGN

P:\proj1\02\40820_plans\pse\24g820oa005.dgn

LAST REVISION 06-23-15 | DATE PLOTTED => 26-JUN-2015 | TIME PLOTTED => 09:51

Dist	COUNTY	ROUTE	POST MILES TOTAL PROJECT	SHEET No.	TOTAL SHEETS
02	Sis	5	R10.7/R19.5	213	327

REGISTERED CIVIL ENGINEER 06-23-15 DATE

06-23-15
PLANS APPROVAL DATE

REGISTERED PROFESSIONAL ENGINEER THERESA ANDERSON No. C77957 Exp. 6-30-17 CIVIL STATE OF CALIFORNIA

THE STATE OF CALIFORNIA OR ITS OFFICERS OR AGENTS SHALL NOT BE RESPONSIBLE FOR THE ACCURACY OR COMPLETENESS OF SCANNED COPIES OF THIS PLAN SHEET.

NOTE:

1. FOR ACCURATE RIGHT OF WAY DATA, CONTACT RIGHT OF WAY ENGINEERING AT THE DISTRICT OFFICE.

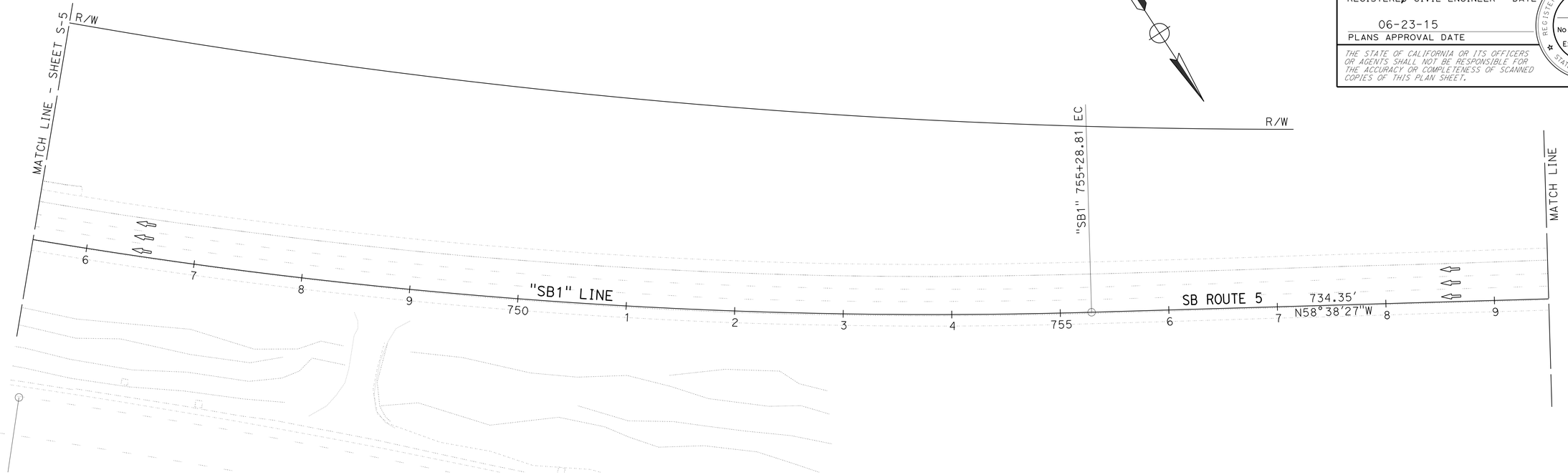

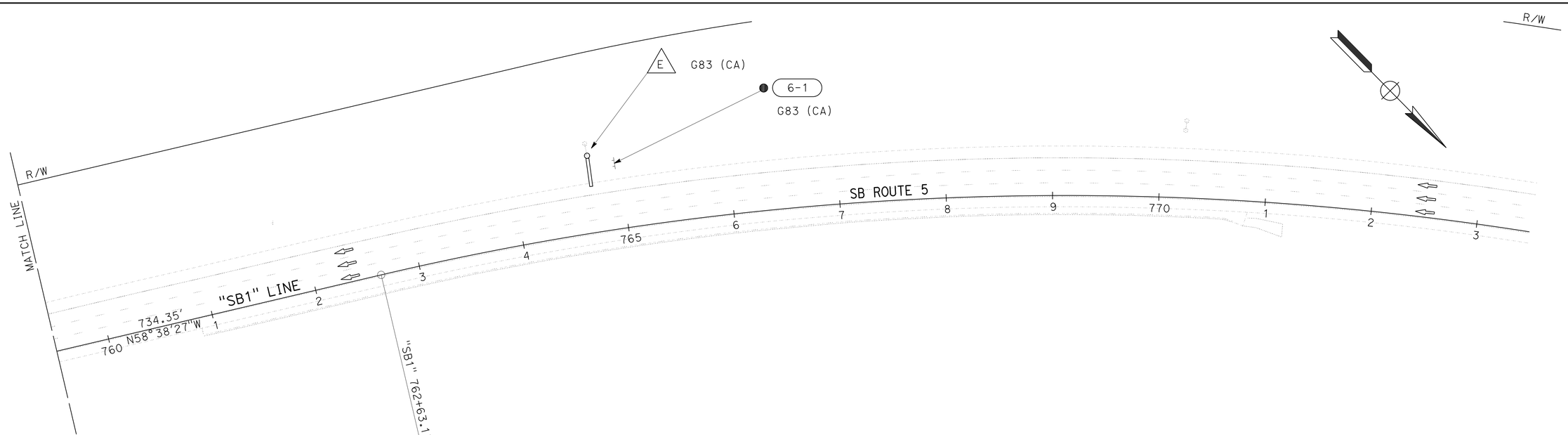

SIGN PLAN

SCALE: 1" = 50' **S-6**

APPROVED FOR SIGN WORK ONLY

REVISED BY | DATE REVISED

TERI ANDERSON | FRANK RIVAS

CALCULATED-DESIGNED BY | CHECKED BY

FUNCTIONAL SUPERVISOR: ROB STINGER

STATE OF CALIFORNIA - DEPARTMENT OF TRANSPORTATION

Caltrans® DESIGN

P:\proj1\02\4G820_plans\pse\24g820oa006.dgn

LAST REVISION 06-23-15 | DATE PLOTTED => 26-JUN-2015 | TIME PLOTTED => 09:51

Dist	COUNTY	ROUTE	POST MILES TOTAL PROJECT	SHEET No.	TOTAL SHEETS
02	Sis	5	R10.7/R19.5	214	327

REGISTERED CIVIL ENGINEER 06-23-15 DATE

06-23-15
PLANS APPROVAL DATE

REGISTERED PROFESSIONAL ENGINEER THERESA ANDERSON No. C77957 Exp. 6-30-17 CIVIL STATE OF CALIFORNIA

THE STATE OF CALIFORNIA OR ITS OFFICERS OR AGENTS SHALL NOT BE RESPONSIBLE FOR THE ACCURACY OR COMPLETENESS OF SCANNED COPIES OF THIS PLAN SHEET.

NOTE:

1. FOR ACCURATE RIGHT OF WAY DATA, CONTACT RIGHT OF WAY ENGINEERING AT THE DISTRICT OFFICE.

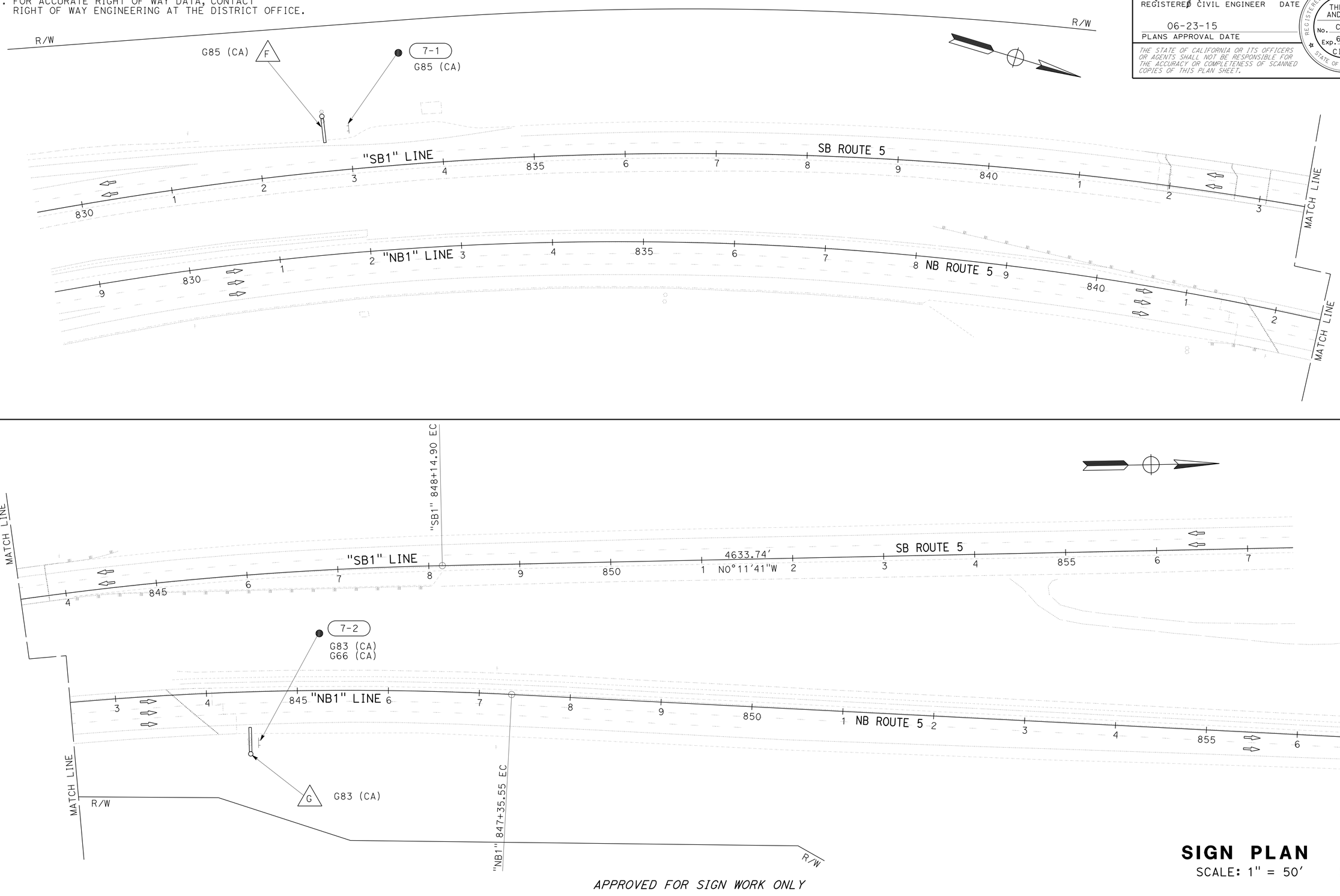

APPROVED FOR SIGN WORK ONLY

SIGN PLAN

SCALE: 1" = 50'

S-7

REVISED BY | DATE REVISED

TERI ANDERSON | FRANK RIVAS

CALCULATED-DESIGNED BY | CHECKED BY

FUNCTIONAL SUPERVISOR: ROB STINGER

STATE OF CALIFORNIA - DEPARTMENT OF TRANSPORTATION

Caltrans® DESIGN

P:\proj1\02\4G820_plans\pse\24g820oa007.dgn

LAST REVISION 06-23-15 | DATE PLOTTED => 26-JUN-2015 | TIME PLOTTED => 09:51

BORDER LAST REVISED 7/2/2010 | USERNAME => s115152 | DGN FILE => 24g820oa007.dgn | RELATIVE BORDER SCALE IS IN INCHES 0 1 2 3 | UNIT 0147 | PROJECT NUMBER & PHASE 02140000631

Dist	COUNTY	ROUTE	POST MILES TOTAL PROJECT	SHEET No.	TOTAL SHEETS
02	Sis	5	R10.7/R19.5	215	327

REGISTERED CIVIL ENGINEER 06-23-15 DATE

06-23-15
PLANS APPROVAL DATE

REGISTERED PROFESSIONAL ENGINEER THERESA ANDERSON No. C77957 Exp. 6-30-17 CIVIL STATE OF CALIFORNIA

THE STATE OF CALIFORNIA OR ITS OFFICERS OR AGENTS SHALL NOT BE RESPONSIBLE FOR THE ACCURACY OR COMPLETENESS OF SCANNED COPIES OF THIS PLAN SHEET.

NOTE:

1. FOR ACCURATE RIGHT OF WAY DATA, CONTACT RIGHT OF WAY ENGINEERING AT THE DISTRICT OFFICE.

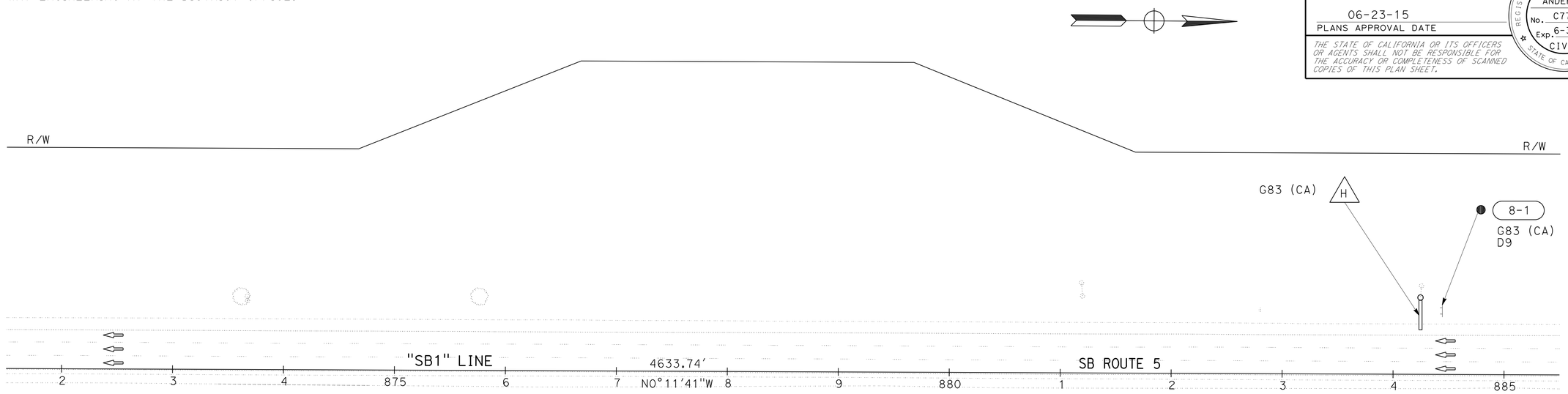

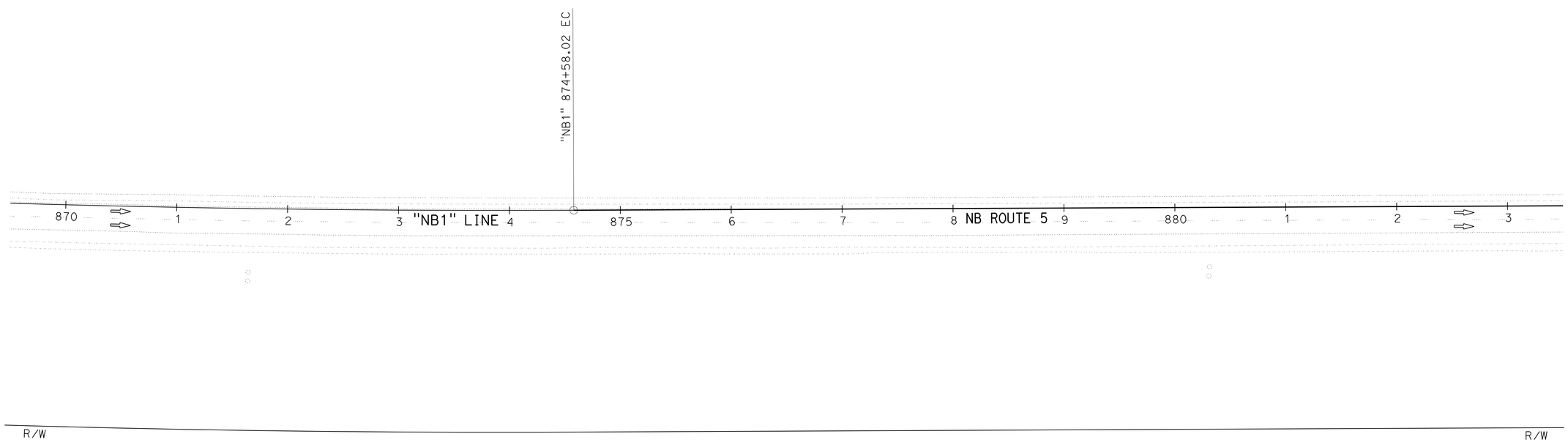

SIGN PLAN

SCALE: 1" = 50'

S-8

APPROVED FOR SIGN WORK ONLY

REVISED BY	DATE REVISED

CALCULATED-DESIGNED BY	CHECKED BY
TERI ANDERSON	FRANK RIVAS

FUNCTIONAL SUPERVISOR: ROB STINGER

STATE OF CALIFORNIA - DEPARTMENT OF TRANSPORTATION

Caltrans DESIGN

P:\proj1\02\4G820_plans\pse\24g820aa008.dgn

LAST REVISION 06-23-15 | DATE PLOTTED => 26-JUN-2015 | TIME PLOTTED => 09:51

Dist	COUNTY	ROUTE	POST MILES TOTAL PROJECT	SHEET No.	TOTAL SHEETS
02	Sis	5	R10.7/R19.5	216	327

REGISTERED CIVIL ENGINEER 06-23-15 DATE

06-23-15
PLANS APPROVAL DATE

REGISTERED PROFESSIONAL ENGINEER
THERESA ANDERSON
No. C77957
Exp. 6-30-17
CIVIL
STATE OF CALIFORNIA

THE STATE OF CALIFORNIA OR ITS OFFICERS OR AGENTS SHALL NOT BE RESPONSIBLE FOR THE ACCURACY OR COMPLETENESS OF SCANNED COPIES OF THIS PLAN SHEET.

NOTE:

1. FOR ACCURATE RIGHT OF WAY DATA, CONTACT RIGHT OF WAY ENGINEERING AT THE DISTRICT OFFICE.

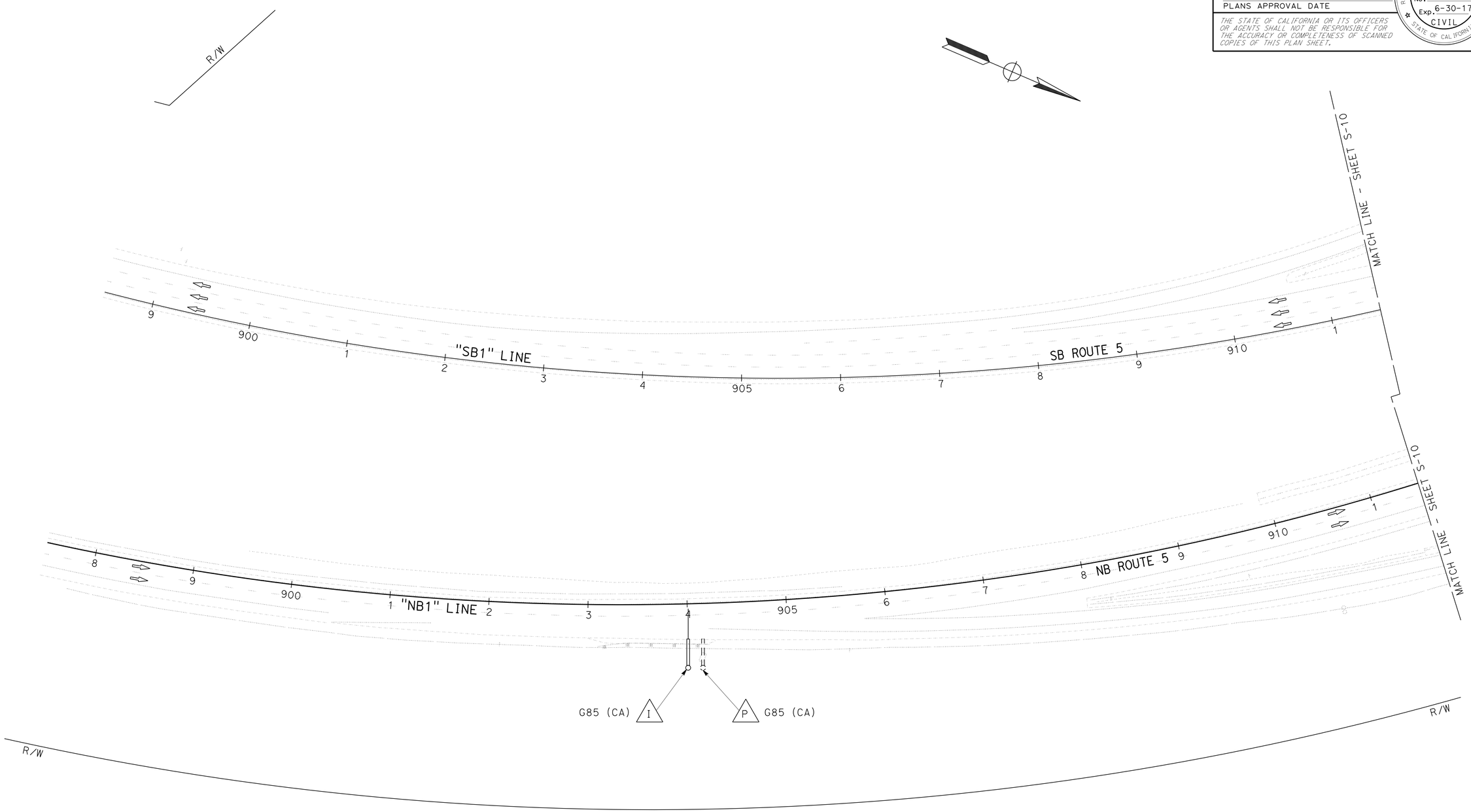

APPROVED FOR SIGN WORK ONLY

SIGN PLAN

SCALE: 1" = 50'

S-9

REVISED BY	DATE REVISED

CALCULATED-DESIGNED BY	TERI ANDERSON
CHECKED BY	FRANK RIVAS

FUNCTIONAL SUPERVISOR: ROB STINGER

STATE OF CALIFORNIA - DEPARTMENT OF TRANSPORTATION

Caltrans® **DESIGN**

P:\proj1\02\4G820_plans\pse\24g820oa009.dgn

LAST REVISION 06-23-15 | DATE PLOTTED => 26-JUN-2015 | TIME PLOTTED => 09:51

Dist	COUNTY	ROUTE	POST MILES TOTAL PROJECT	SHEET No.	TOTAL SHEETS
02	Sis	5	R10.7/R19.5	217	327

REGISTERED CIVIL ENGINEER 06-23-15 DATE

06-23-15
PLANS APPROVAL DATE

REGISTERED PROFESSIONAL ENGINEER THERESA ANDERSON No. C77957 Exp. 6-30-17 CIVIL STATE OF CALIFORNIA

THE STATE OF CALIFORNIA OR ITS OFFICERS OR AGENTS SHALL NOT BE RESPONSIBLE FOR THE ACCURACY OR COMPLETENESS OF SCANNED COPIES OF THIS PLAN SHEET.

NOTE:

1. FOR ACCURATE RIGHT OF WAY DATA, CONTACT RIGHT OF WAY ENGINEERING AT THE DISTRICT OFFICE.

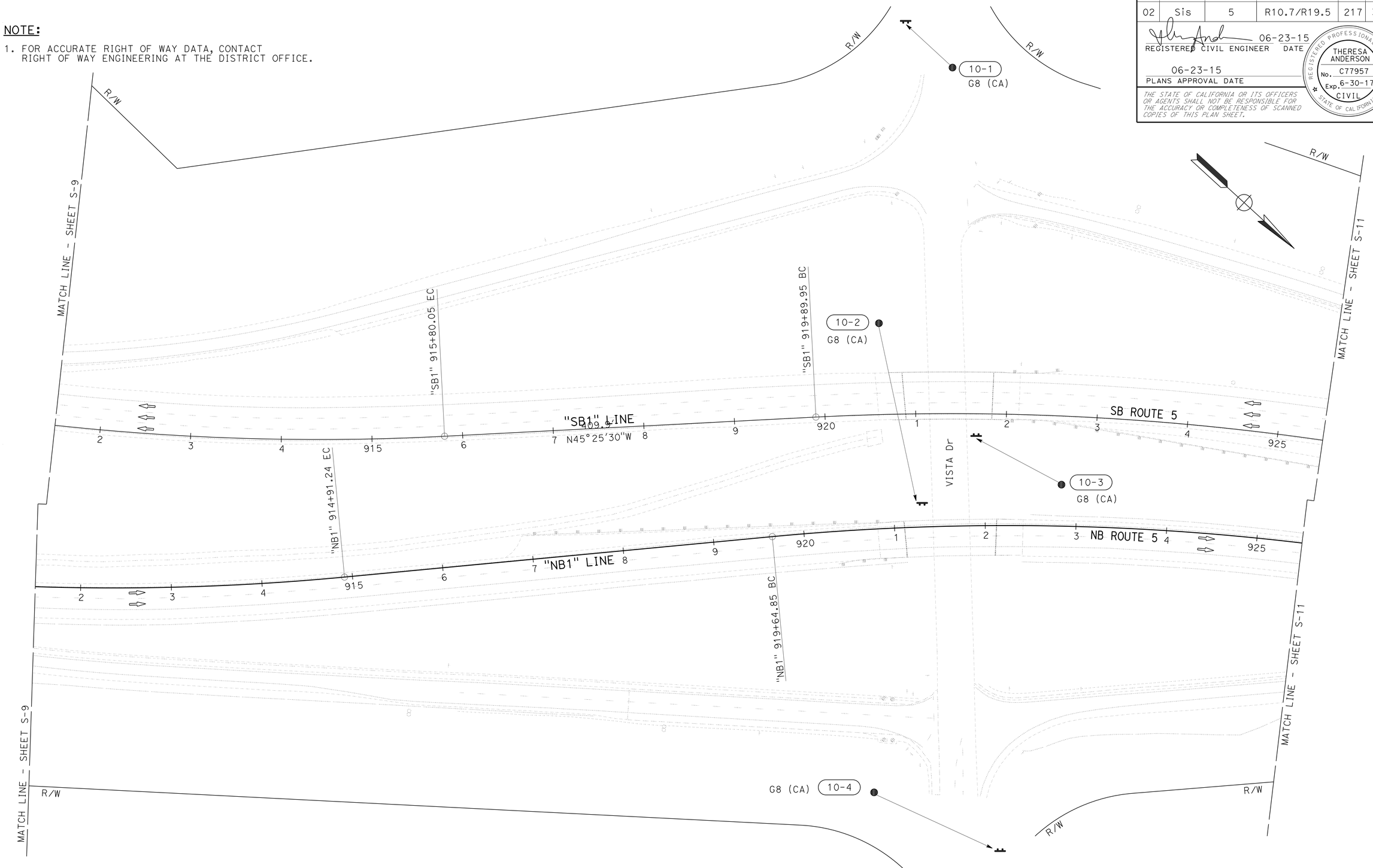

SIGN PLAN

SCALE: 1" = 50'

S-10

APPROVED FOR SIGN WORK ONLY

TERI ANDERSON — FRANK RIVAS — ROB STINGER

REVISED BY — DATE REVISED — CALCULATED-DESIGNED BY — CHECKED BY — FUNCTIONAL SUPERVISOR

STATE OF CALIFORNIA - DEPARTMENT OF TRANSPORTATION

Caltrans

DESIGN

P:\proj1\02\46820_plans\pse\24g820oa010.dgn

LAST REVISION 06-23-15 — DATE PLOTTED => 26-JUN-2015 — TIME PLOTTED => 09:51

Dist	COUNTY	ROUTE	POST MILES TOTAL PROJECT	SHEET No.	TOTAL SHEETS
02	Sis	5	R10.7/R19.5	218	327

REGISTERED CIVIL ENGINEER 06-23-15 DATE

06-23-15
PLANS APPROVAL DATE

REGISTERED PROFESSIONAL ENGINEER
THERESA ANDERSON
No. C77957
Exp. 6-30-17
CIVIL
STATE OF CALIFORNIA

THE STATE OF CALIFORNIA OR ITS OFFICERS OR AGENTS SHALL NOT BE RESPONSIBLE FOR THE ACCURACY OR COMPLETENESS OF SCANNED COPIES OF THIS PLAN SHEET.

NOTE:

1. FOR ACCURATE RIGHT OF WAY DATA, CONTACT RIGHT OF WAY ENGINEERING AT THE DISTRICT OFFICE.

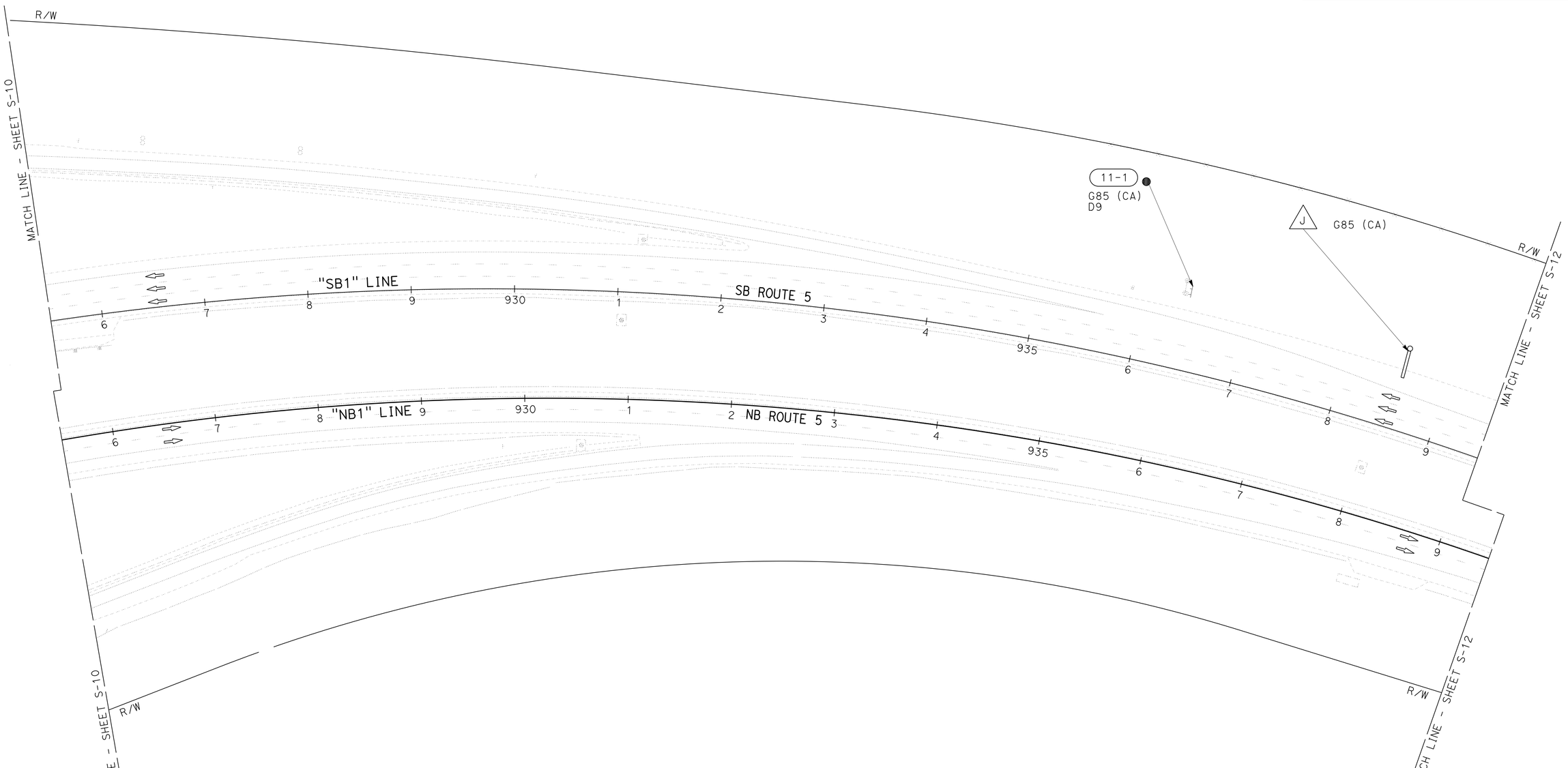

SIGN PLAN

SCALE: 1" = 50'

S-11

APPROVED FOR SIGN WORK ONLY

REVISED BY	DATE REVISED

CALCULATED-DESIGNED BY	CHECKED BY
TERI ANDERSON	FRANK RIVAS

FUNCTIONAL SUPERVISOR: ROB STINGER

STATE OF CALIFORNIA - DEPARTMENT OF TRANSPORTATION

Caltrans® **DESIGN**

P:\proj1\02\4G820_plans\pse\24g820aa011.dgn

LAST REVISION 06-23-15 | DATE PLOTTED => 26-JUN-2015 | TIME PLOTTED => 09:51

BORDER LAST REVISED 7/2/2010 | USERNAME => s115152 | DGN FILE => 24g820aa011.dgn | RELATIVE BORDER SCALE IS IN INCHES 0 1 2 3 | UNIT 0147 | PROJECT NUMBER & PHASE 02140000631

Dist	COUNTY	ROUTE	POST MILES TOTAL PROJECT	SHEET No.	TOTAL SHEETS
02	Sis	5	R10.7/R19.5	219	327

REGISTERED CIVIL ENGINEER 06-23-15 DATE

06-23-15
PLANS APPROVAL DATE

REGISTERED PROFESSIONAL ENGINEER THERESA ANDERSON No. C77957 Exp. 6-30-17 CIVIL STATE OF CALIFORNIA

THE STATE OF CALIFORNIA OR ITS OFFICERS OR AGENTS SHALL NOT BE RESPONSIBLE FOR THE ACCURACY OR COMPLETENESS OF SCANNED COPIES OF THIS PLAN SHEET.

NOTE:

1. FOR ACCURATE RIGHT OF WAY DATA, CONTACT RIGHT OF WAY ENGINEERING AT THE DISTRICT OFFICE.

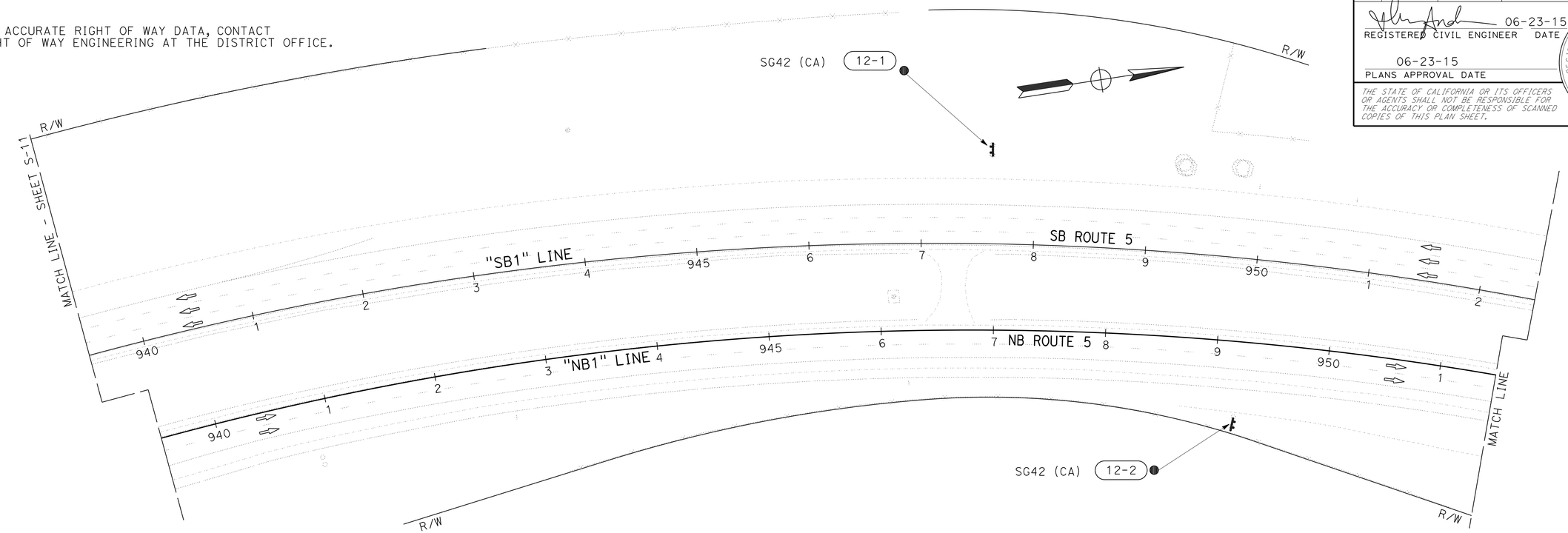

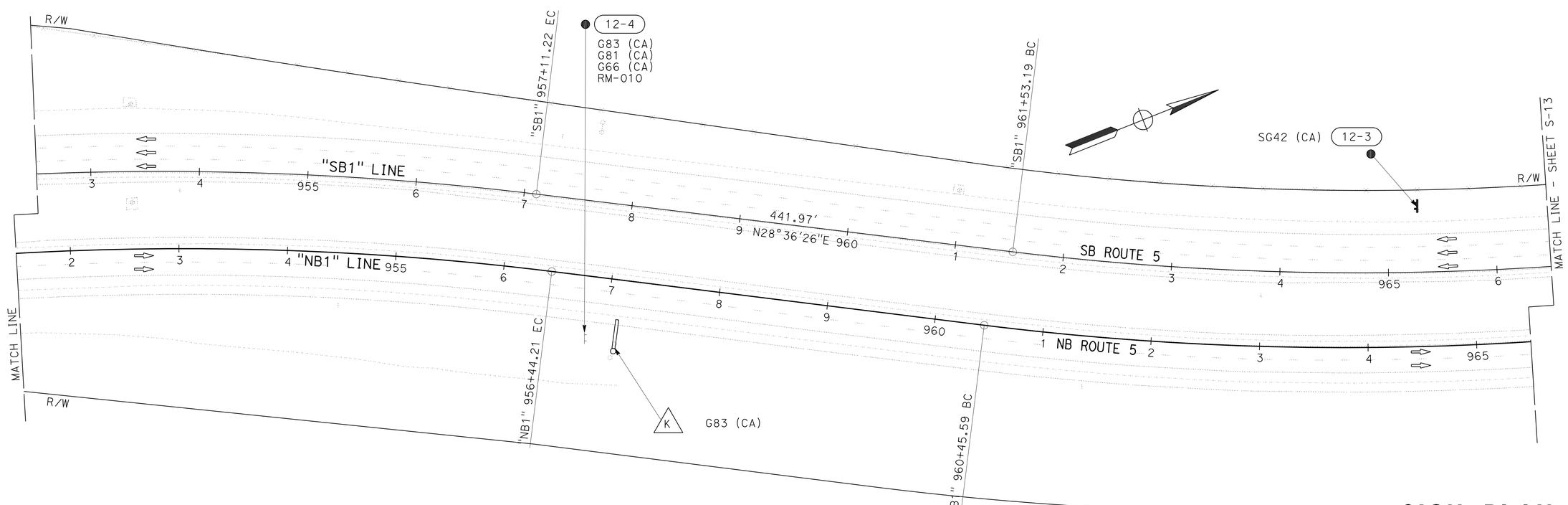

APPROVED FOR SIGN WORK ONLY

SIGN PLAN

SCALE: 1" = 50'

S-12

REVISED BY	DATE REVISED
TERI ANDERSON	FRANK RIVAS
CALCULATED-DESIGNED BY	CHECKED BY
FUNCTIONAL SUPERVISOR	ROB STINGER

STATE OF CALIFORNIA - DEPARTMENT OF TRANSPORTATION

Caltrans® DESIGN

P:\proj1\02\4G820_plans\pse\24g820oa012.dgn

LAST REVISION 06-23-15 | DATE PLOTTED => 26-JUN-2015 | TIME PLOTTED => 09:51

Dist	COUNTY	ROUTE	POST MILES TOTAL PROJECT	SHEET No.	TOTAL SHEETS
02	Sis	5	R10.7/R19.5	220	327

REGISTERED CIVIL ENGINEER 06-23-15 DATE

06-23-15
PLANS APPROVAL DATE

REGISTERED PROFESSIONAL ENGINEER THERESA ANDERSON No. C77957 Exp. 6-30-17 CIVIL STATE OF CALIFORNIA

THE STATE OF CALIFORNIA OR ITS OFFICERS OR AGENTS SHALL NOT BE RESPONSIBLE FOR THE ACCURACY OR COMPLETENESS OF SCANNED COPIES OF THIS PLAN SHEET.

NOTE:

1. FOR ACCURATE RIGHT OF WAY DATA, CONTACT RIGHT OF WAY ENGINEERING AT THE DISTRICT OFFICE.

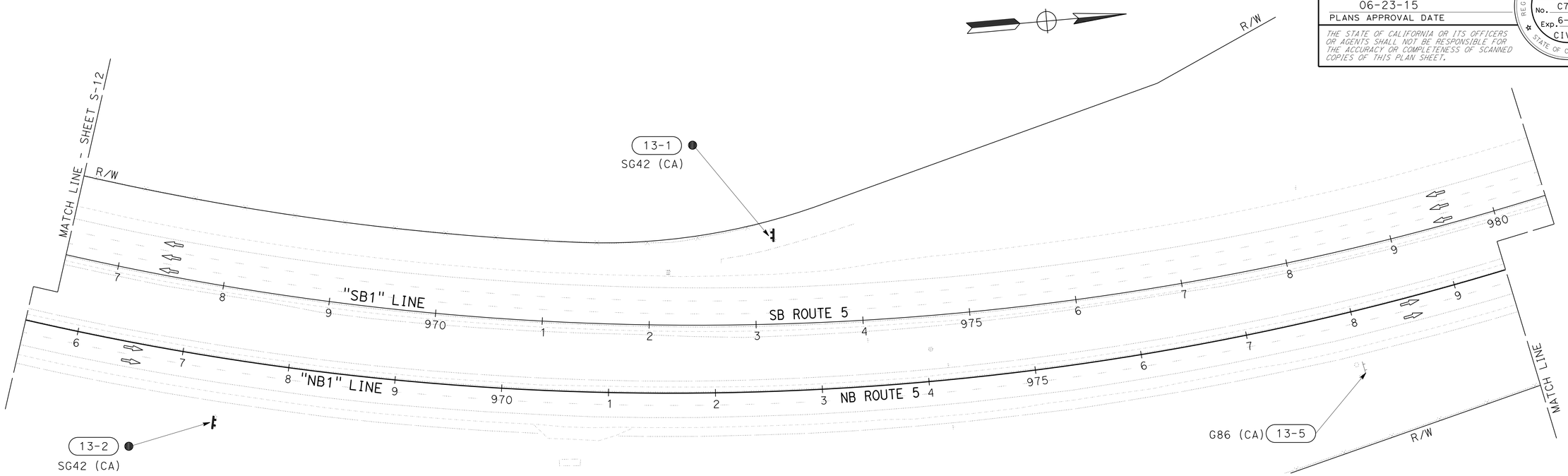

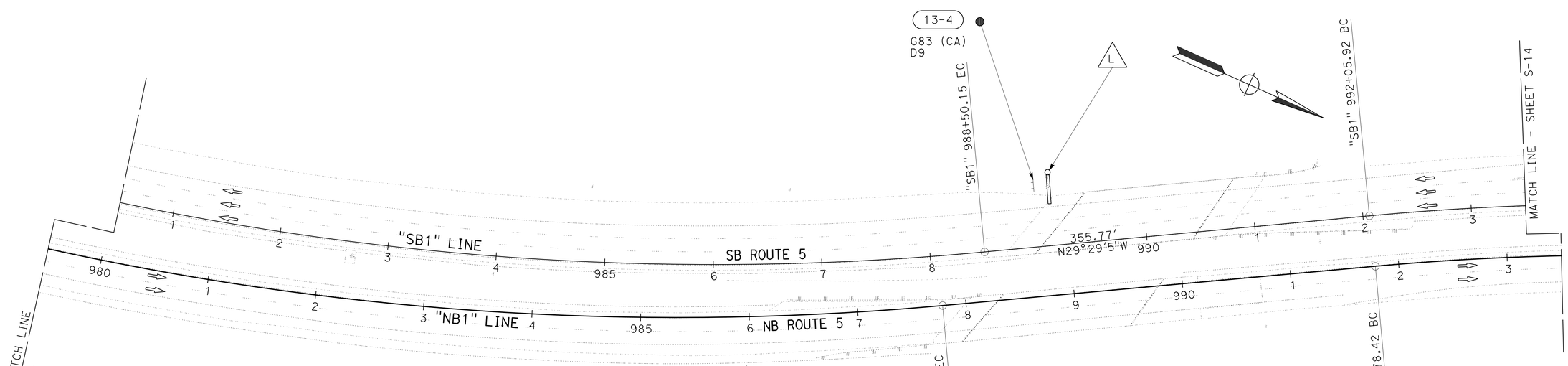

SIGN PLAN

SCALE: 1" = 50'

S-13

APPROVED FOR SIGN WORK ONLY

REVISED BY	DATE REVISED

CALCULATED-DESIGNED BY: TERI ANDERSON
CHECKED BY: FRANK RIVAS
FUNCTIONAL SUPERVISOR: ROB STINGER

STATE OF CALIFORNIA - DEPARTMENT OF TRANSPORTATION
Caltrans
DESIGN

P:\proj1\02\4G820_plans\pse\24g820oa013.dgn

LAST REVISION 06-23-15 | DATE PLOTTED => 26-JUN-2015 | TIME PLOTTED => 09:51

Dist	COUNTY	ROUTE	POST MILES TOTAL PROJECT	SHEET No.	TOTAL SHEETS
02	Sis	5	R10.7/R19.5	221	327

REGISTERED CIVIL ENGINEER 06-23-15 DATE

06-23-15
PLANS APPROVAL DATE

REGISTERED PROFESSIONAL ENGINEER THERESA ANDERSON No. C77957 Exp. 6-30-17 CIVIL STATE OF CALIFORNIA

THE STATE OF CALIFORNIA OR ITS OFFICERS OR AGENTS SHALL NOT BE RESPONSIBLE FOR THE ACCURACY OR COMPLETENESS OF SCANNED COPIES OF THIS PLAN SHEET.

NOTE:

1. FOR ACCURATE RIGHT OF WAY DATA, CONTACT RIGHT OF WAY ENGINEERING AT THE DISTRICT OFFICE.

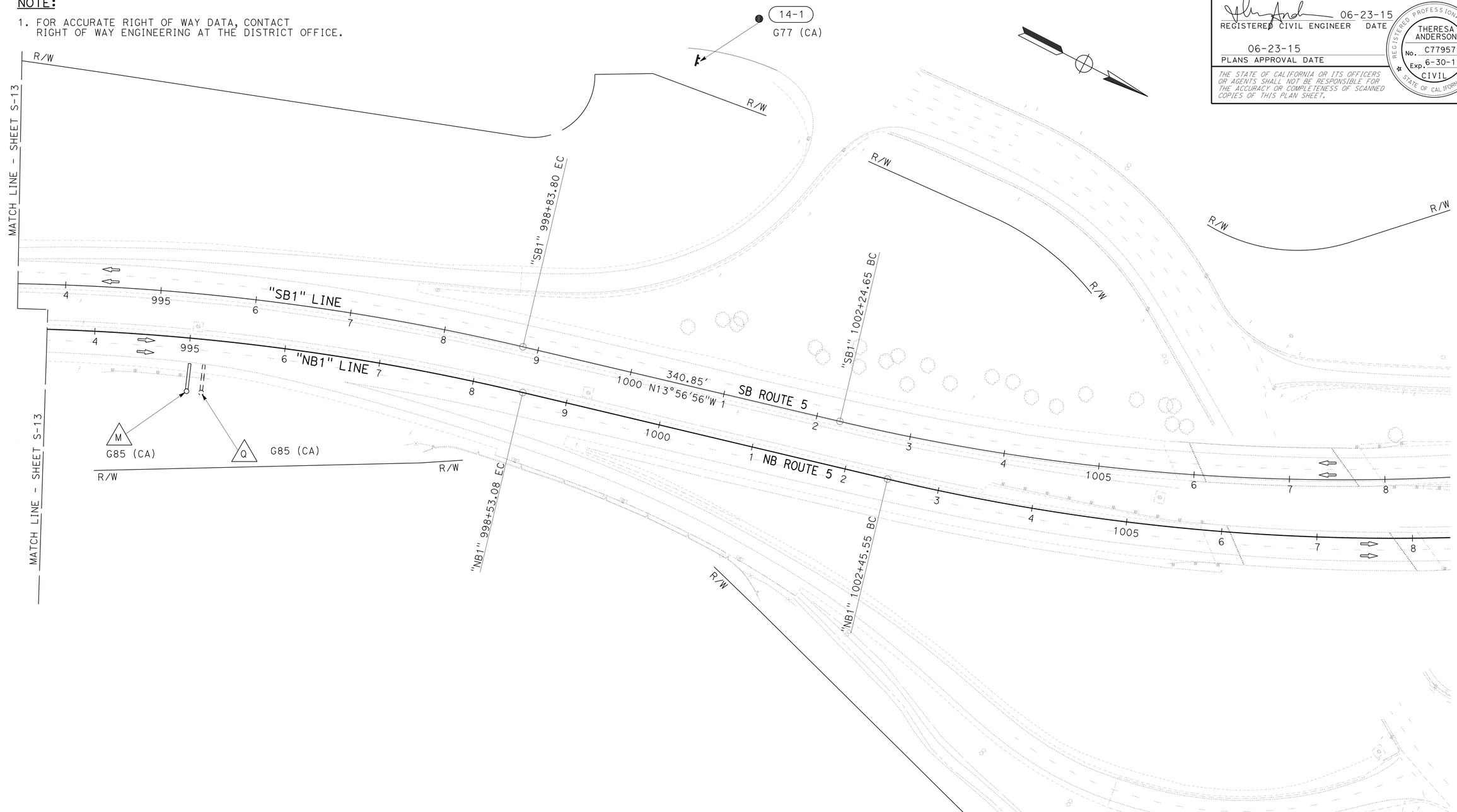

SIGN PLAN
SCALE: 1" = 50'

S-14

APPROVED FOR SIGN WORK ONLY

STATE OF CALIFORNIA - DEPARTMENT OF TRANSPORTATION
Caltrans® **DESIGN**

FUNCTIONAL SUPERVISOR: ROB STINGER
CALCULATED-DESIGNED BY: TERI ANDERSON
CHECKED BY: FRANK RIVAS
REVISED BY
DATE REVISED

P:\proj1\02\4G820_plans\pse\24g820oa014.dgn

LAST REVISION 06-23-15
DATE PLOTTED => 26-JUN-2015
TIME PLOTTED => 09:51

BORDER LAST REVISED 7/2/2010
USERNAME => s115152
DGN FILE => 24g820oa014.dgn
RELATIVE BORDER SCALE IS IN INCHES 0 1 2 3
UNIT 0147
PROJECT NUMBER & PHASE 02140000631

Dist	COUNTY	ROUTE	POST MILES TOTAL PROJECT	SHEET No.	TOTAL SHEETS
02	Sis	5	R10.7/R19.5	222	327

REGISTERED CIVIL ENGINEER 06-23-15 DATE

06-23-15
PLANS APPROVAL DATE

REGISTERED PROFESSIONAL ENGINEER THERESA ANDERSON No. C77957 Exp. 6-30-17 CIVIL STATE OF CALIFORNIA

THE STATE OF CALIFORNIA OR ITS OFFICERS OR AGENTS SHALL NOT BE RESPONSIBLE FOR THE ACCURACY OR COMPLETENESS OF SCANNED COPIES OF THIS PLAN SHEET.

NOTE:

1. ELEVATIONS ARE BASED ON AN ASSUMED DATUM AT EACH LOCATION.

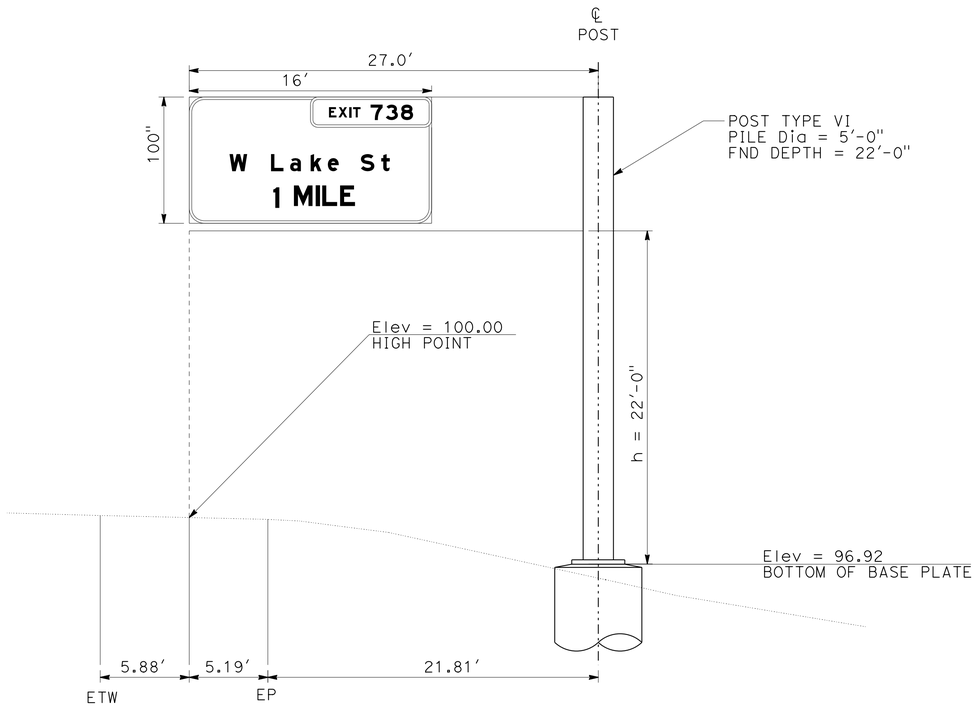

A "SB1" 608+97

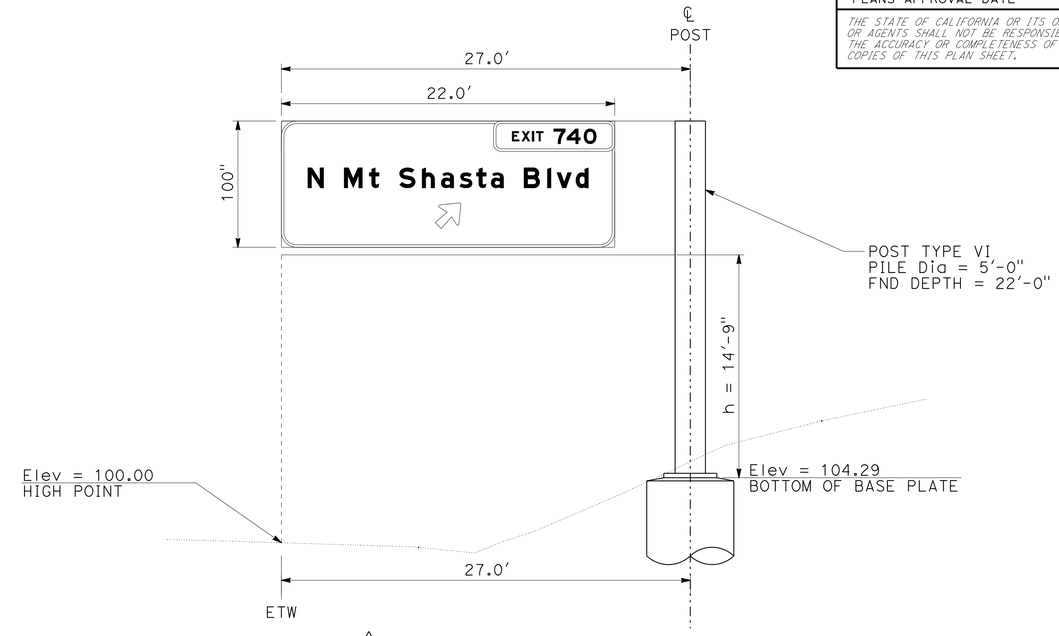

B "SB1" 654+60

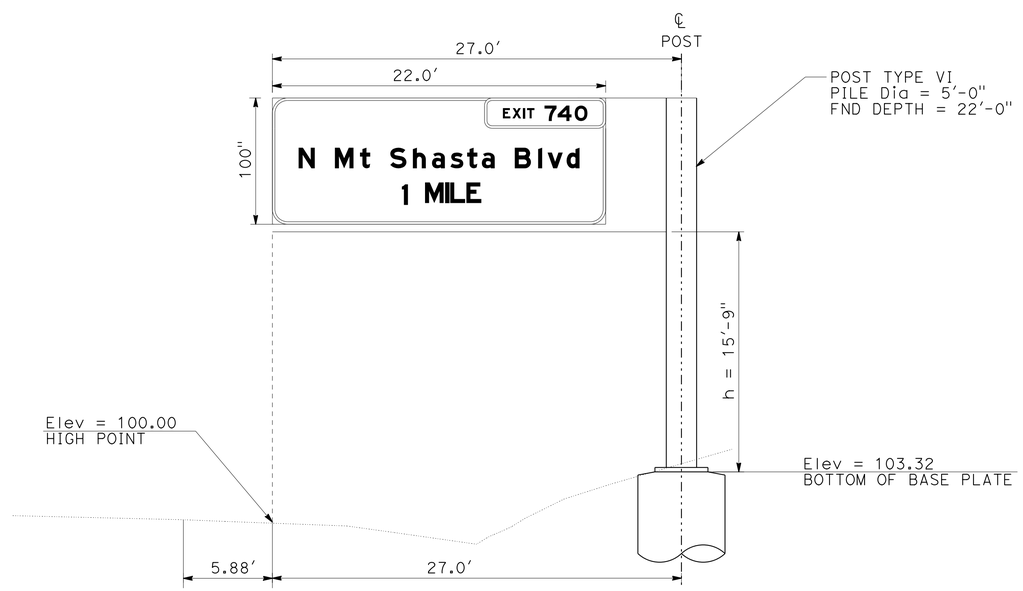

C "SB1" 698+17

SIGN DETAILS

NO SCALE

SD-1

REVISED BY | DATE REVISED
TERI ANDERSON | FRANK RIVAS
CALCULATED-DESIGNED BY | CHECKED BY
FUNCTIONAL SUPERVISOR
ROB STINGER

STATE OF CALIFORNIA - DEPARTMENT OF TRANSPORTATION
Caltrans
DESIGN

P:\proj1\02\4G820_plans\pse\24g820ob001.dgn

LAST REVISION 06-23-15 | DATE PLOTTED => 26-JUN-2015 | TIME PLOTTED => 09:51

Dist	COUNTY	ROUTE	POST MILES TOTAL PROJECT	SHEET No.	TOTAL SHEETS
02	Sis	5	R10.7/R19.5	223	327

REGISTERED CIVIL ENGINEER 06-23-15 DATE

06-23-15
PLANS APPROVAL DATE

REGISTERED PROFESSIONAL ENGINEER THERESA ANDERSON No. C77957 Exp. 6-30-17 CIVIL STATE OF CALIFORNIA

THE STATE OF CALIFORNIA OR ITS OFFICERS OR AGENTS SHALL NOT BE RESPONSIBLE FOR THE ACCURACY OR COMPLETENESS OF SCANNED COPIES OF THIS PLAN SHEET.

NOTE:

1. ELEVATIONS ARE BASED ON AN ASSUMED DATUM AT EACH LOCATION.

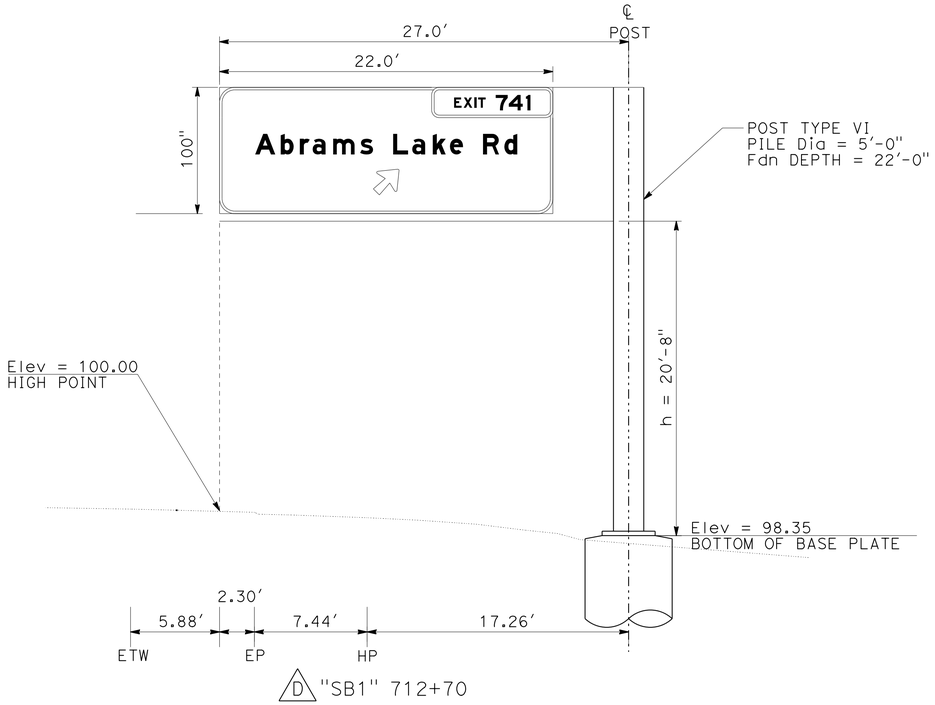

D "SB1" 712+70

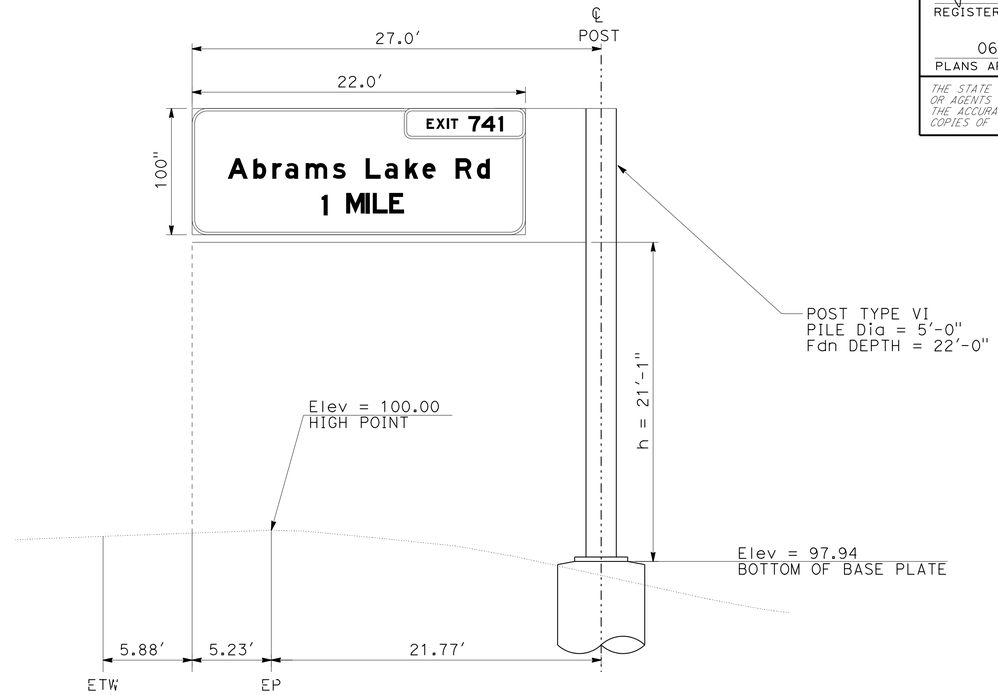

E "SB1" 764+72

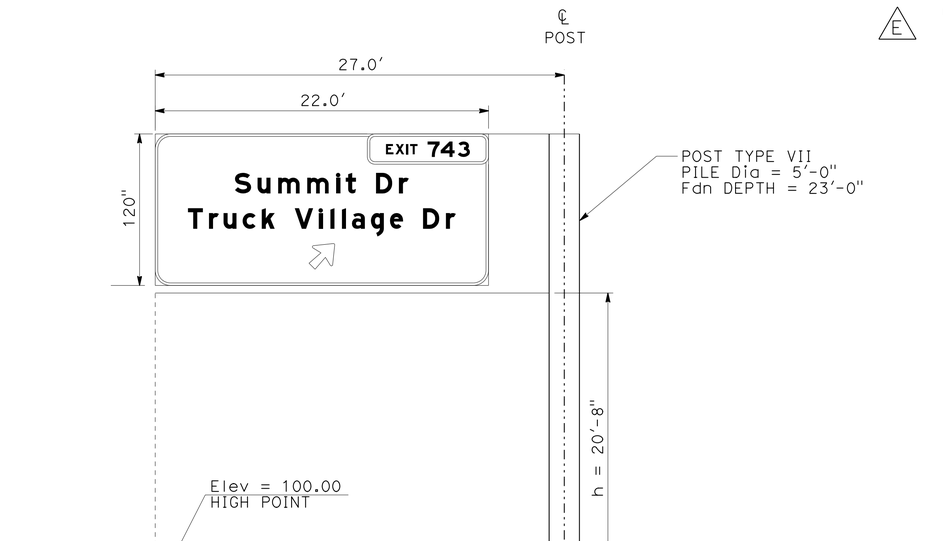

F "SB1" 832+72

SIGN DETAILS

NO SCALE

SD-2

REVISED BY	DATE REVISED

TERI ANDERSON — FRANK RIVAS — CALCULATED-DESIGNED BY — CHECKED BY

FUNCTIONAL SUPERVISOR: ROB STINGER

STATE OF CALIFORNIA - DEPARTMENT OF TRANSPORTATION — Caltrans — DESIGN

P:\proj1\02\4G820_plans\pse\24g820ob002.dgn

LAST REVISION 06-23-15 | DATE PLOTTED => 26-JUN-2015 | TIME PLOTTED => 09:51

Dist	COUNTY	ROUTE	POST MILES TOTAL PROJECT	SHEET No.	TOTAL SHEETS
02	Sis	5	R10.7/R19.5	224	327

REGISTERED CIVIL ENGINEER 06-23-15 DATE

06-23-15
PLANS APPROVAL DATE

REGISTERED PROFESSIONAL ENGINEER THERESA ANDERSON No. C77957 Exp. 6-30-17 CIVIL STATE OF CALIFORNIA

THE STATE OF CALIFORNIA OR ITS OFFICERS OR AGENTS SHALL NOT BE RESPONSIBLE FOR THE ACCURACY OR COMPLETENESS OF SCANNED COPIES OF THIS PLAN SHEET.

NOTE:

1. ELEVATIONS ARE BASED ON AN ASSUMED DATUM AT EACH LOCATION.

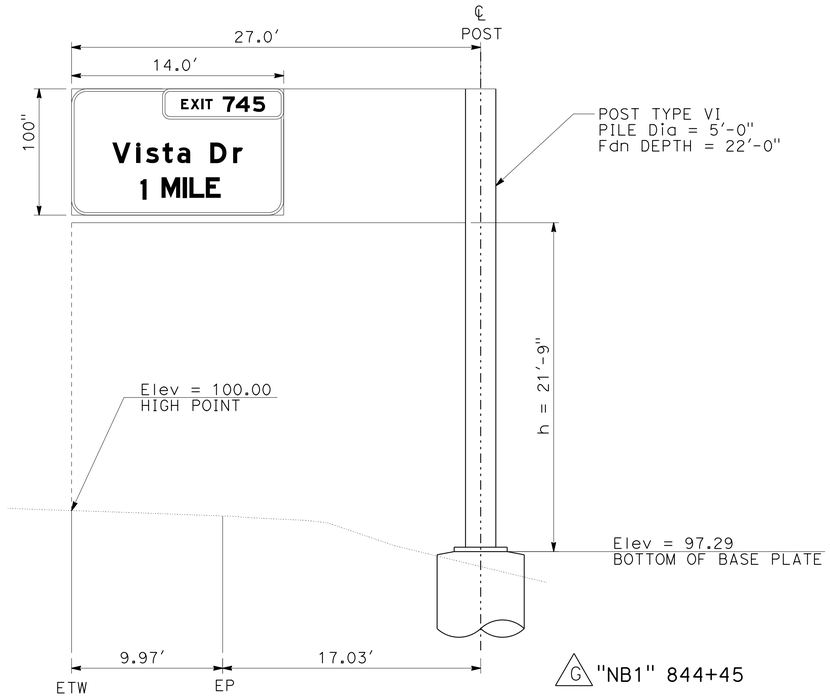

G "NB1" 844+45

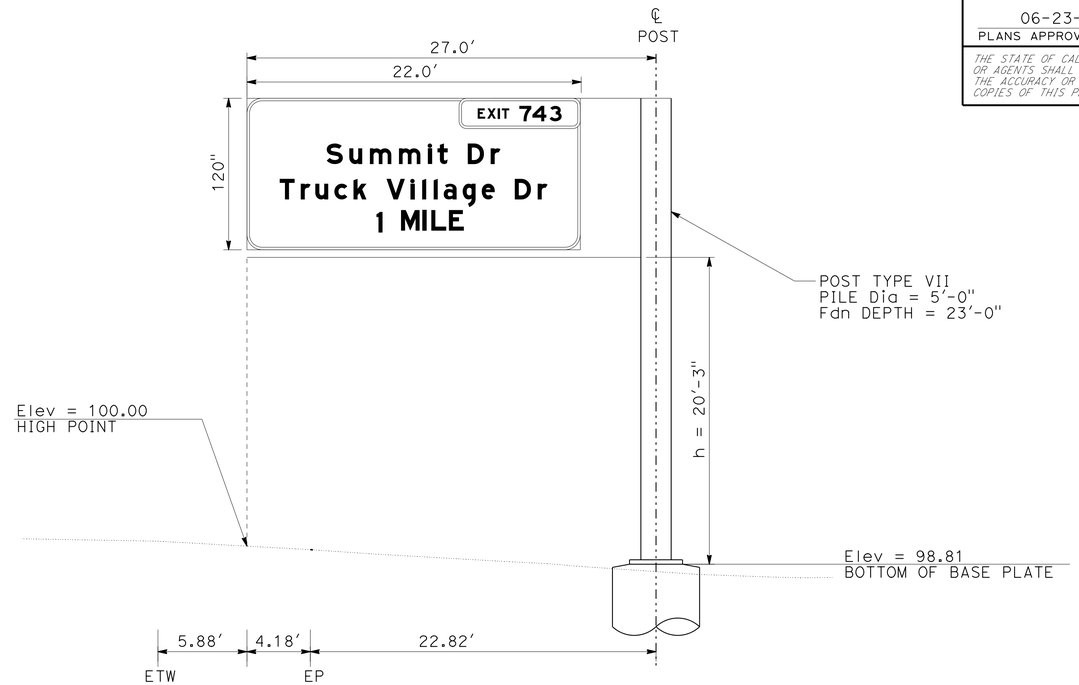

H "SB1" 884+24

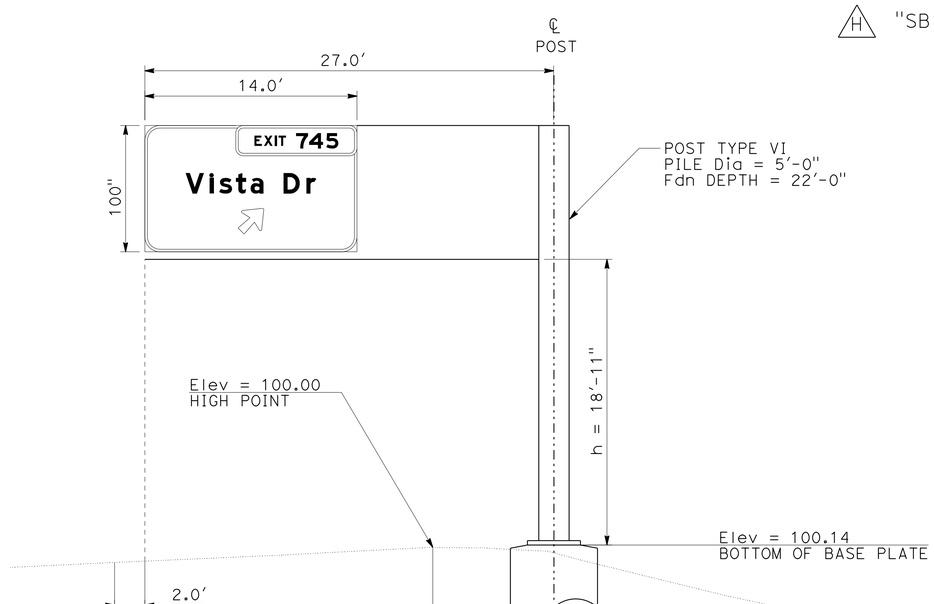

I "NB1" 904+03

SIGN DETAILS

NO SCALE

SD-3

REVISED BY	DATE REVISED
TERI ANDERSON	FRANK RIVAS
CALCULATED-DESIGNED BY	CHECKED BY
FUNCTIONAL SUPERVISOR	ROB STINGER

STATE OF CALIFORNIA - DEPARTMENT OF TRANSPORTATION
Caltrans
DESIGN

P:\proj1\02\4G820_plans\pse\24g820ob003.dgn

LAST REVISION 06-23-15 | DATE PLOTTED => 26-JUN-2015 | TIME PLOTTED => 09:51

Dist	COUNTY	ROUTE	POST MILES TOTAL PROJECT	SHEET No.	TOTAL SHEETS
02	Sis	5	R10.7/R19.5	225	327

REGISTERED CIVIL ENGINEER 06-23-15 DATE

06-23-15
PLANS APPROVAL DATE

REGISTERED PROFESSIONAL ENGINEER THERESA ANDERSON No. C77957 Exp. 6-30-17 CIVIL STATE OF CALIFORNIA

THE STATE OF CALIFORNIA OR ITS OFFICERS OR AGENTS SHALL NOT BE RESPONSIBLE FOR THE ACCURACY OR COMPLETENESS OF SCANNED COPIES OF THIS PLAN SHEET.

NOTE:

1. ELEVATIONS ARE BASED ON AN ASSUMED DATUM AT EACH LOCATION.

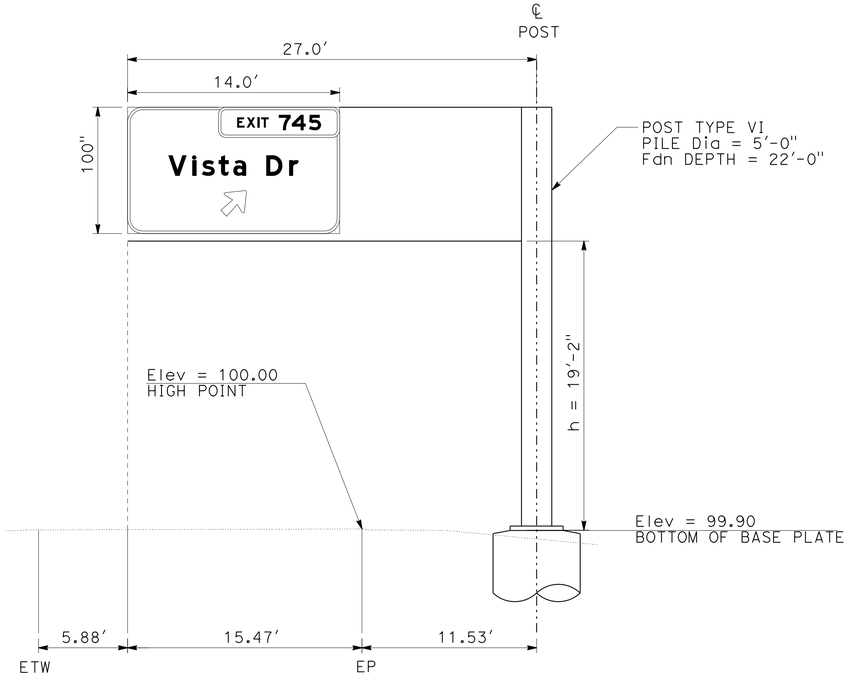

J "SB1" 938+50

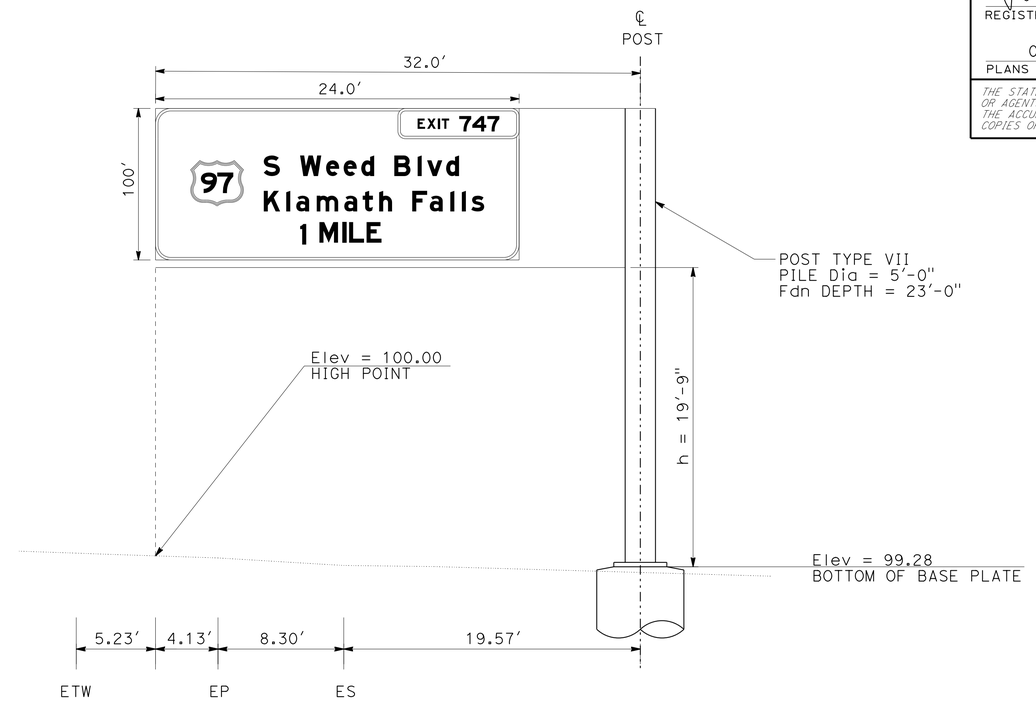

K "NB1" 957+10

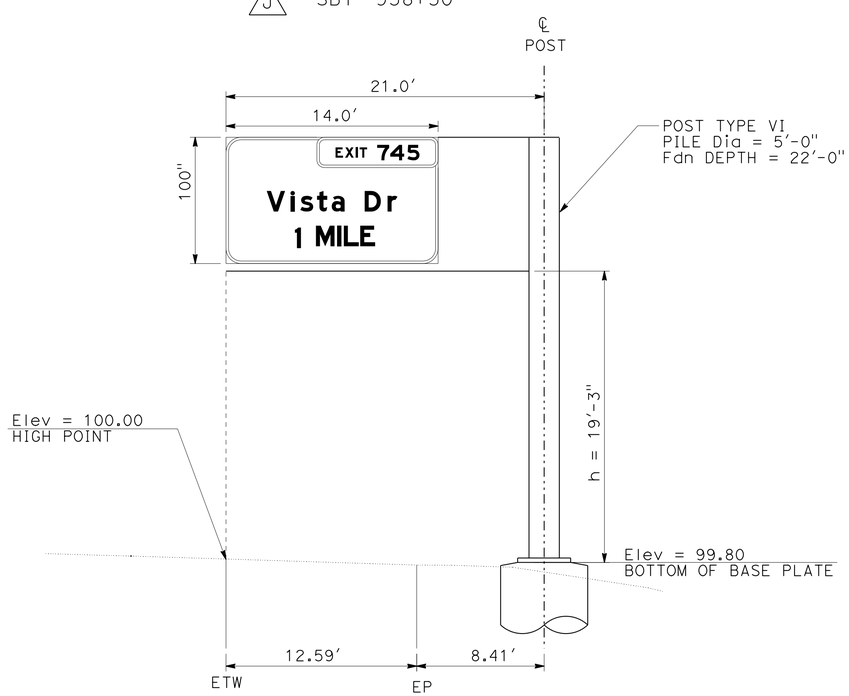

L "SB1" 989+17

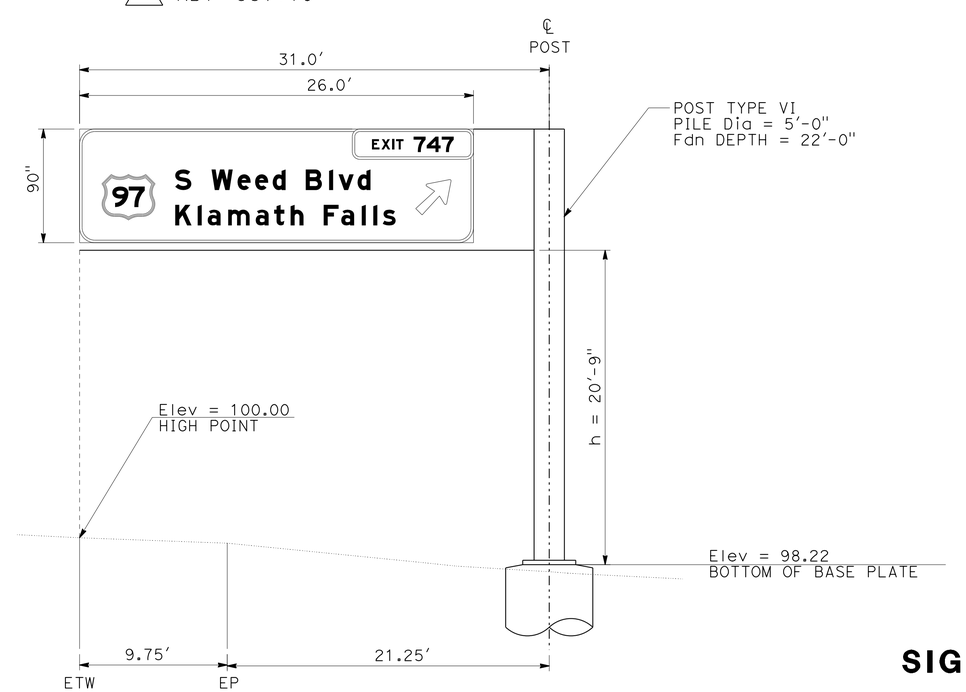

M "NB1" 995+02

SIGN DETAILS

NO SCALE

SD-4

REVISED BY	DATE REVISED

CALCULATED-DESIGNED BY	CHECKED BY
TERI ANDERSON	FRANK RIVAS

FUNCTIONAL SUPERVISOR: ROB STINGER

STATE OF CALIFORNIA - DEPARTMENT OF TRANSPORTATION

Caltrans® DESIGN

P:\proj1\02\4g820_plans\pse\24g820ob004.dgn

LAST REVISION 06-23-15 | DATE PLOTTED => 26-JUN-2015 | TIME PLOTTED => 09:51

Dist	COUNTY	ROUTE	POST MILES TOTAL PROJECT	SHEET No.	TOTAL SHEETS
02	Sis	5	R10.7/R19.5	226	327

REGISTERED CIVIL ENGINEER 06-23-15 DATE

06-23-15
PLANS APPROVAL DATE

REGISTERED PROFESSIONAL ENGINEER THERESA ANDERSON No. C77957 Exp. 6-30-17 CIVIL STATE OF CALIFORNIA

THE STATE OF CALIFORNIA OR ITS OFFICERS OR AGENTS SHALL NOT BE RESPONSIBLE FOR THE ACCURACY OR COMPLETENESS OF SCANNED COPIES OF THIS PLAN SHEET.

NOTE:

1. ALL DIMENSIONS SHOWN IN INCHES.

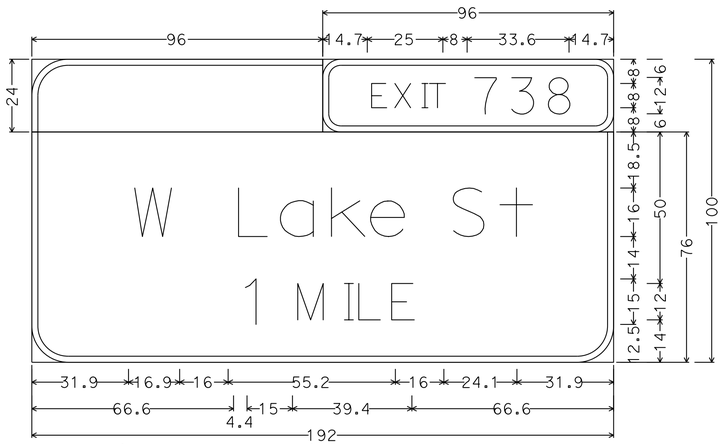

12.0" Radius, 2.0" Border, White on Green;
6.0" Radius, 2.0" Border, White on Green;
[EXIT] E; [738] E;
12.0" Radius, 2.0" Border, White on Green;
[W Lake St] E Mod; [1 MILE] E;

A G83 (CA)

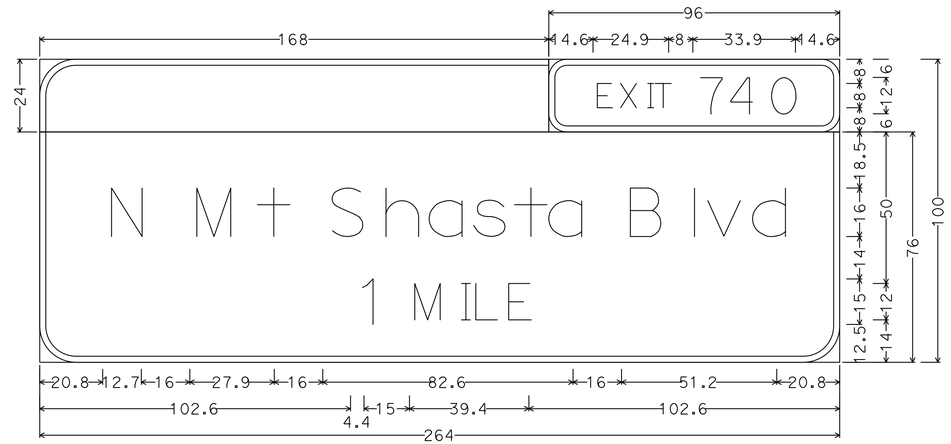

12.0" Radius, 2.0" Border, White on Green;
6.0" Radius, 2.0" Border, White on Green;
[EXIT] E; [740] E;
12.0" Radius, 2.0" Border, White on Green;
[N Mt Shasta Blvd] E Mod; [1 MILE] E;

C G83 (CA)

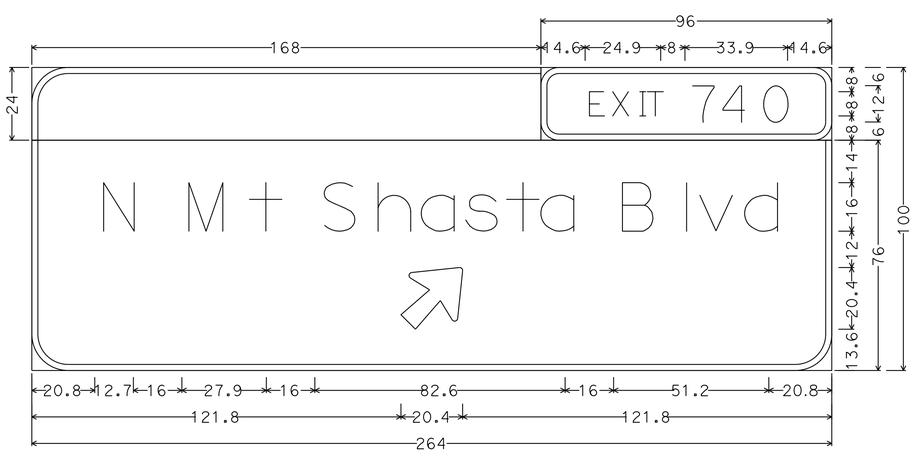

12.0" Radius, 2.0" Border, White on Green;
6.0" Radius, 2.0" Border, White on Green;
[EXIT] E; [740] E;
12.0" Radius, 2.0" Border, White on Green;
[N Mt Shasta Blvd] E Mod; Arrow 16CAP-1L - 25.0" 45°

B G85 (CA)

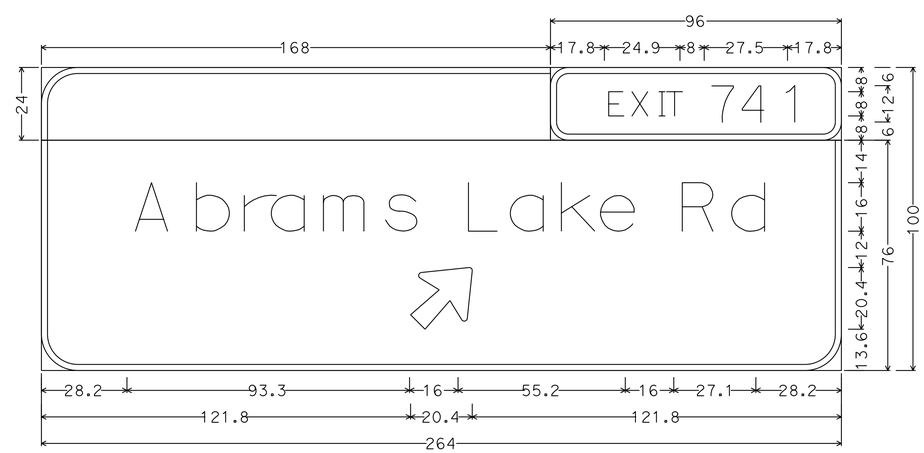

12.0" Radius, 2.0" Border, White on Green;
6.0" Radius, 2.0" Border, White on Green;
[EXIT] E; [741] E;
12.0" Radius, 2.0" Border, White on Green;
[Abrams Lake Rd] E Mod; Arrow 16CAP-1L - 25.0" 45°

D G85 (CA)

SIGN DETAILS

NO SCALE

SD-5

STATE OF CALIFORNIA - DEPARTMENT OF TRANSPORTATION
Caltrans DESIGN

FUNCTIONAL SUPERVISOR: ROB STINGER
CALCULATED-DESIGNED BY: TERI ANDERSON
CHECKED BY: FRANK RIVAS
REVISED BY / DATE REVISED

P:\proj1\02\4820_plans\pse\24g820ob005.dgn

LAST REVISION 06-23-15
DATE PLOTTED => 26-JUN-2015
TIME PLOTTED => 09:51

Dist	COUNTY	ROUTE	POST MILES TOTAL PROJECT	SHEET No.	TOTAL SHEETS
02	Sis	5	R10.7/R19.5	227	327

REGISTERED CIVIL ENGINEER 06-23-15 DATE

06-23-15
PLANS APPROVAL DATE

REGISTERED PROFESSIONAL ENGINEER THERESA ANDERSON No. C77957 Exp. 6-30-17 CIVIL STATE OF CALIFORNIA

THE STATE OF CALIFORNIA OR ITS OFFICERS OR AGENTS SHALL NOT BE RESPONSIBLE FOR THE ACCURACY OR COMPLETENESS OF SCANNED COPIES OF THIS PLAN SHEET.

NOTE:

1. ALL DIMENSIONS SHOWN IN INCHES.

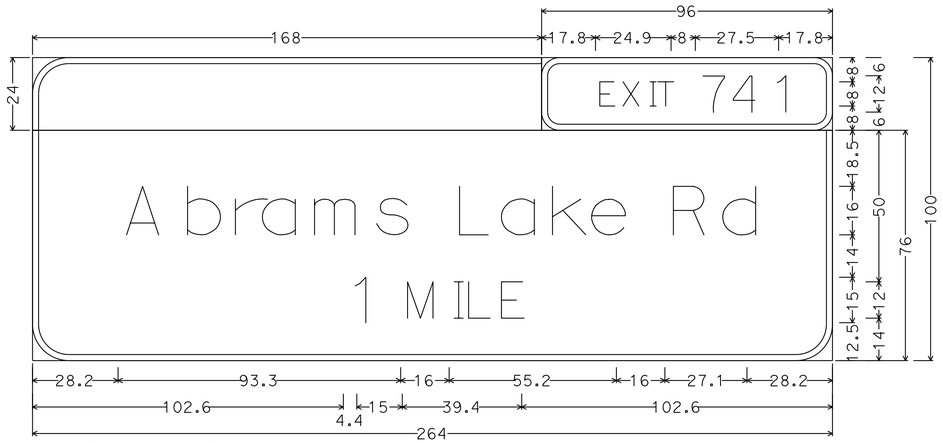

12.0" Radius, 2.0" Border, White on Green;
6.0" Radius, 2.0" Border, White on Green;
[EXIT] E; [741] E;
12.0" Radius, 2.0" Border, White on Green;
[Abrams Lake Rd] E Mod; [1 MILE] E;

E G83 (CA)

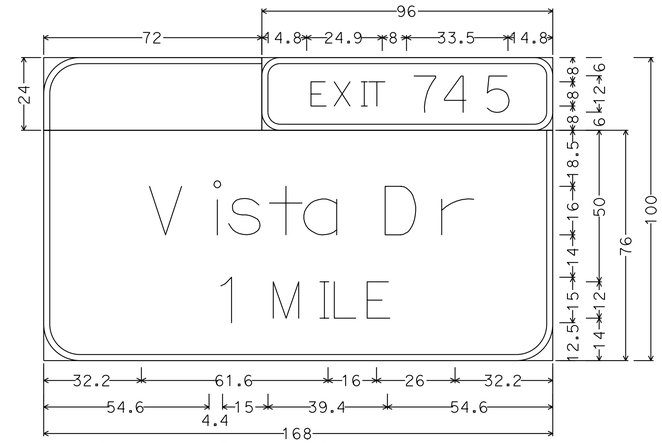

12.0" Radius, 2.0" Border, White on Green;
6.0" Radius, 2.0" Border, White on Green;
[EXIT] E; [745] E;
12.0" Radius, 2.0" Border, White on Green;
[Vista Dr] E Mod; [1 MILE] E;

G G83 (CA)

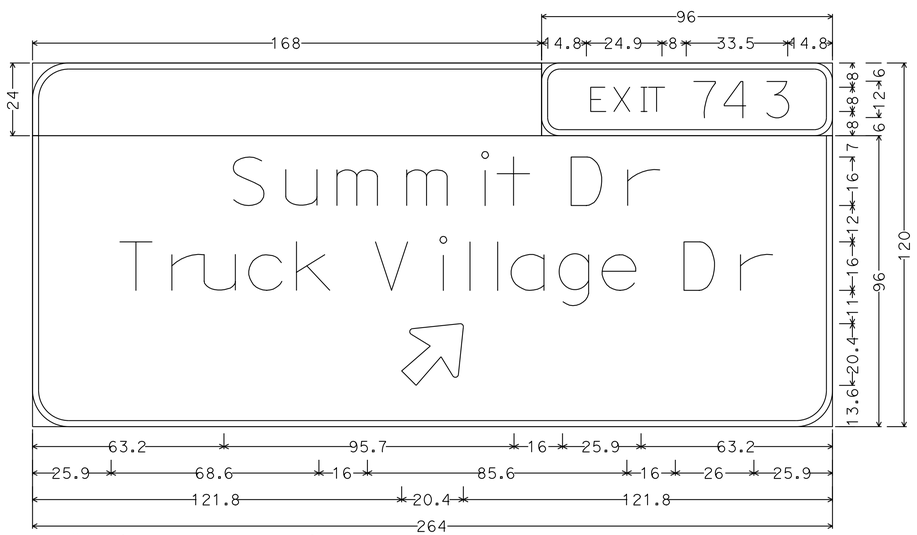

12.0" Radius, 2.0" Border, White on Green;
6.0" Radius, 2.0" Border, White on Green;
[EXIT] E; [743] E;
12.0" Radius, 2.0" Border, White on Green;
[Summit Dr] E Mod; [Truck Village Dr] E Mod; Arrow 16CAP-1L - 25.0" 45°

F G85 (CA)

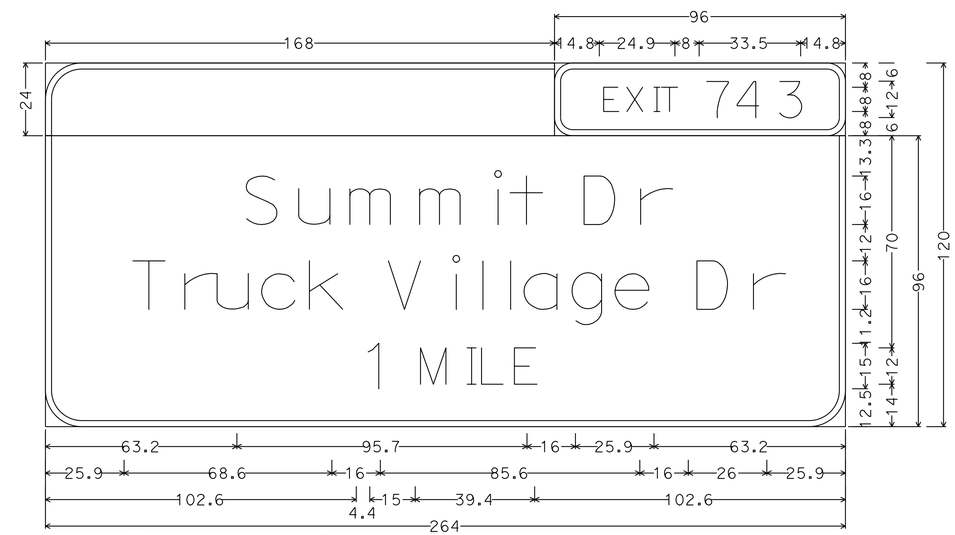

12.0" Radius, 2.0" Border, White on Green;
6.0" Radius, 2.0" Border, White on Green;
[EXIT] E; [743] E;
12.0" Radius, 2.0" Border, White on Green;
[Summit Dr] E Mod; [Truck Village Dr] E Mod; [1 MILE] E;

H G83 (CA)

SIGN DETAILS

NO SCALE

SD-6

REVISED BY | DATE REVISED
TERI ANDERSON | FRANK RIVAS
CALCULATED-DESIGNED BY | CHECKED BY
FUNCTIONAL SUPERVISOR: ROB STINGER

STATE OF CALIFORNIA - DEPARTMENT OF TRANSPORTATION
Caltrans
DESIGN

P:\proj1\02\4820_plans\pse\24g820ob006.dgn

LAST REVISION 06-23-15 | DATE PLOTTED => 26-JUN-2015 | TIME PLOTTED => 09:51

Dist	COUNTY	ROUTE	POST MILES TOTAL PROJECT	SHEET No.	TOTAL SHEETS
02	Sis	5	R10.7/R19.5	228	327

REGISTERED CIVIL ENGINEER 06-23-15 DATE

06-23-15
PLANS APPROVAL DATE

REGISTERED PROFESSIONAL ENGINEER THERESA ANDERSON No. C77957 Exp. 6-30-17 CIVIL STATE OF CALIFORNIA

THE STATE OF CALIFORNIA OR ITS OFFICERS OR AGENTS SHALL NOT BE RESPONSIBLE FOR THE ACCURACY OR COMPLETENESS OF SCANNED COPIES OF THIS PLAN SHEET.

NOTE:

1. ALL DIMENSIONS SHOWN IN INCHES.

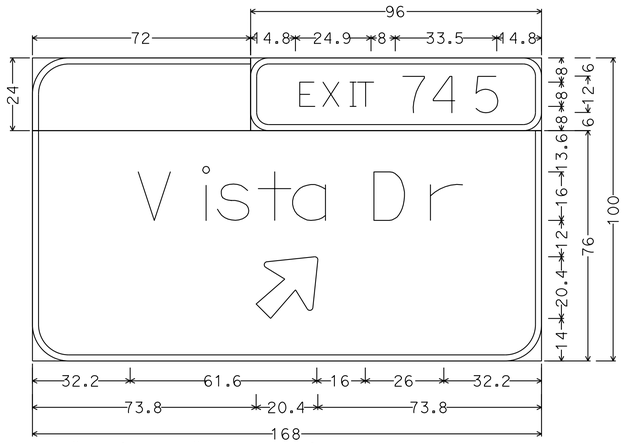

12.0" Radius, 2.0" Border, White on Green;
6.0" Radius, 2.0" Border, White on Green;
[EXIT] E; [745] E;
12.0" Radius, 2.0" Border, White on Green;
[Vista Dr] E Mod; Arrow 16CAP-1L - 25.0" 45°

I G85 (CA)

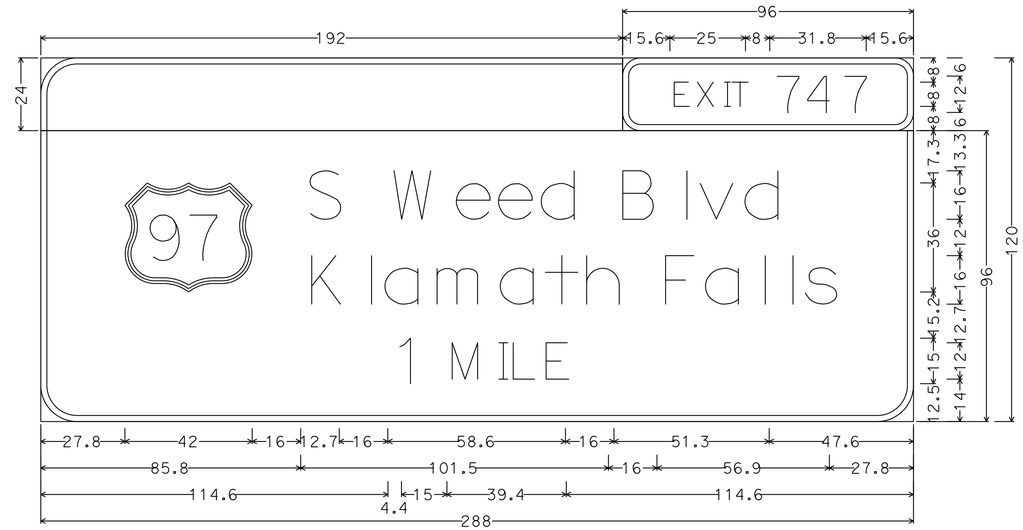

12.0" Radius, 2.0" Border, White on Green;
6.0" Radius, 2.0" Border, White on Green;
[EXIT] E; [747] E;
12.0" Radius, 2.0" Border, White on Green;
[S Weed Blvd] E Mod; [Klamath Falls] E Mod; [1 MILE] E;

K G83 (CA)

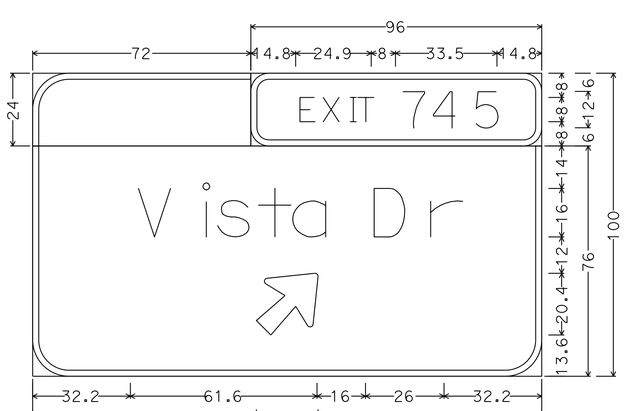

12.0" Radius, 2.0" Border, White on Green;
6.0" Radius, 2.0" Border, White on Green;
[EXIT] E; [745] E;
12.0" Radius, 2.0" Border, White on Green;
[Vista Dr] E Mod; Arrow 16CAP-1L - 25.0" 45°

J G85 (CA)

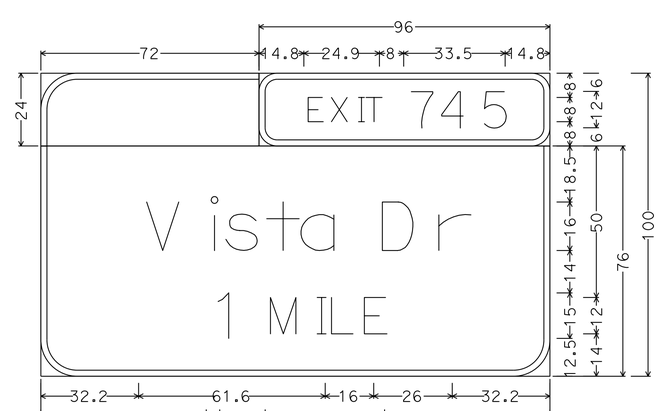

12.0" Radius, 2.0" Border, White on Green;
6.0" Radius, 2.0" Border, White on Green;
[EXIT] E; [745] E;
12.0" Radius, 2.0" Border, White on Green;
[Vista Dr] E Mod; [1 MILE] E;

L G83 (CA)

SIGN DETAILS

NO SCALE

SD-7

STATE OF CALIFORNIA - DEPARTMENT OF TRANSPORTATION
Caltrans® **DESIGN**

FUNCTIONAL SUPERVISOR: ROB STINGER
CALCULATED-DESIGNED BY: TERI ANDERSON
CHECKED BY: FRANK RIVAS
REVISED BY / DATE REVISED

P:\proj1\02\4G820_plans\pse\24g820ob007.dgn

LAST REVISION 06-23-15 | DATE PLOTTED => 26-JUN-2015 | TIME PLOTTED => 09:51

Dist	COUNTY	ROUTE	POST MILES TOTAL PROJECT	SHEET No.	TOTAL SHEETS
02	Sis	5	R10.7/R19.5	229	327

REGISTERED CIVIL ENGINEER 06-23-15 DATE

06-23-15
PLANS APPROVAL DATE

REGISTERED PROFESSIONAL ENGINEER THERESA ANDERSON No. C77957 Exp. 6-30-17 CIVIL STATE OF CALIFORNIA

THE STATE OF CALIFORNIA OR ITS OFFICERS OR AGENTS SHALL NOT BE RESPONSIBLE FOR THE ACCURACY OR COMPLETENESS OF SCANNED COPIES OF THIS PLAN SHEET.

NOTE:

1. ALL DIMENSIONS SHOWN IN INCHES.

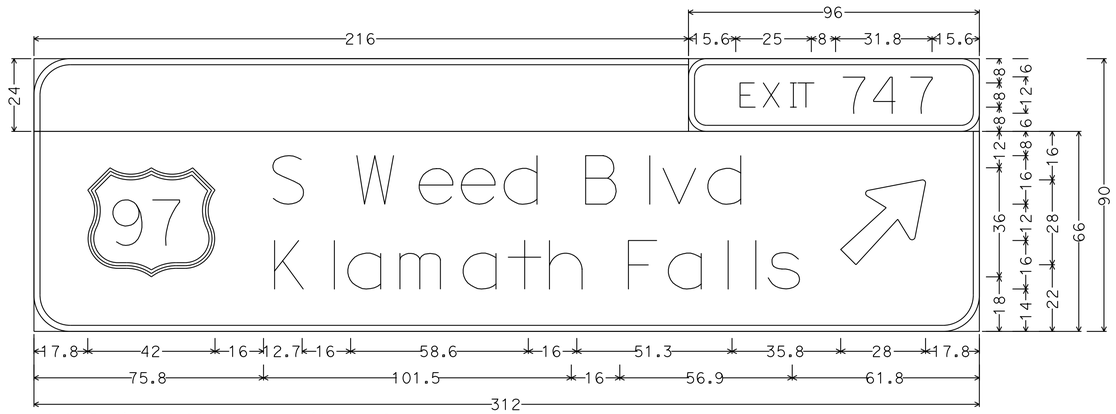

12.0" Radius, 2.0" Border, White on Green;
6.0" Radius, 2.0" Border, White on Green;
[EXIT] E; [747] E;
12.0" Radius, 2.0" Border, White on Green;
[S Weed Blvd] E Mod; [Klamath Falls] E Mod; Arrow 16CAP-2LV - 35.6" 45°

M G85 (CA)

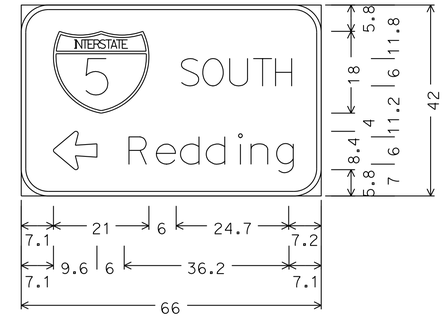

6.0" Radius, 1.0" Border, White on Green;
[SOUTH] D;
Arrow 6UC-1L - 9.6" 180°
[Redding] E Mod;

4-1 10-3 G78 (CA)

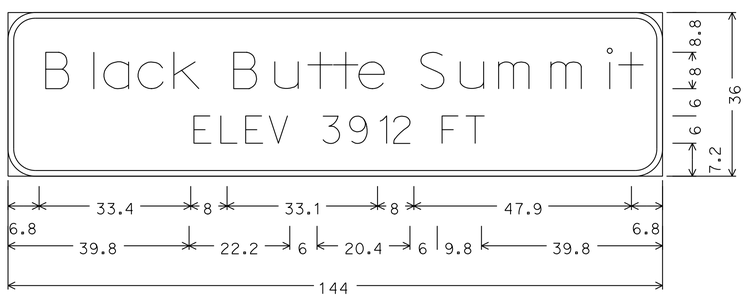

6.0" Radius, 1.3" Border, White on Green;
[Black Butte Summit] E Mod; [ELEV 3912 FT] E Mod;

5-1 G16 (CA)

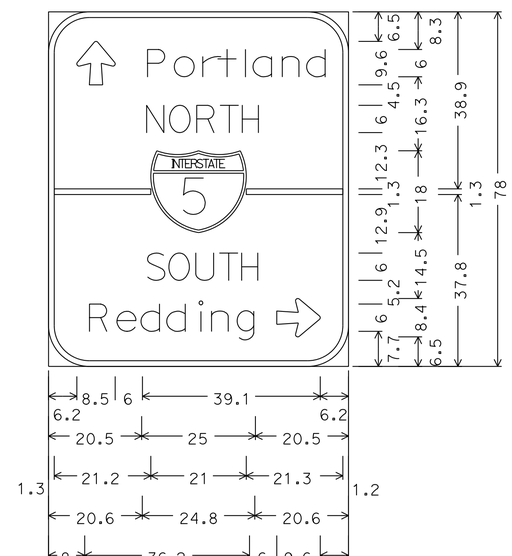

9.0" Radius, 1.3" Border, White on Green;
Arrow 6UC-1L - 9.6" 90°
[Portland] E Mod;
[NORTH] D; [SOUTH] D;
[Redding] E Mod;
Arrow 6UC-1L - 9.6" 0°

10-1 G77A (CA)

SIGN DETAILS

NO SCALE

SD-8

STATE OF CALIFORNIA - DEPARTMENT OF TRANSPORTATION
Caltrans® DESIGN

FUNCTIONAL SUPERVISOR: ROB STINGER
CALCULATED-DESIGNED BY: TERI ANDERSON
CHECKED BY: FRANK RIVAS
REVISED BY
DATE REVISED

P:\proj1\02\4G820_plans\pse\24g820ob008.dgn

LAST REVISION 06-23-15 | DATE PLOTTED => 26-JUN-2015 | TIME PLOTTED => 09:51

Dist	COUNTY	ROUTE	POST MILES TOTAL PROJECT	SHEET No.	TOTAL SHEETS
02	Sis	5	R10.7/R19.5	230	327

REGISTERED CIVIL ENGINEER 06-23-15 DATE

06-23-15
PLANS APPROVAL DATE

REGISTERED PROFESSIONAL ENGINEER THERESA ANDERSON No. C77957 Exp. 6-30-17 CIVIL STATE OF CALIFORNIA

THE STATE OF CALIFORNIA OR ITS OFFICERS OR AGENTS SHALL NOT BE RESPONSIBLE FOR THE ACCURACY OR COMPLETENESS OF SCANNED COPIES OF THIS PLAN SHEET.

NOTE:

1. ALL DIMENSIONS SHOWN IN INCHES.

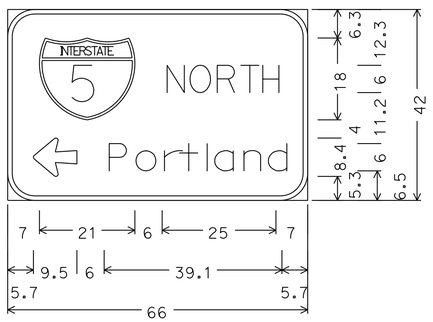

6.0" Radius, 1.0" Border, White on Green;
[NORTH] D;
Arrow 6UC-1L - 9.6" 180°
[Portland] E Mod;

10-2 G78 (CA)

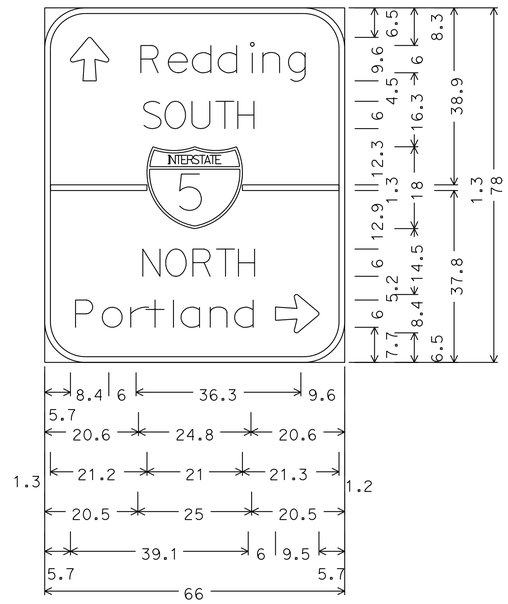

9.0" Radius, 1.3" Border, White on Green;
Arrow 6UC-1L - 9.6" 90°
[Redding] E Mod;
[SOUTH] D; [NORTH] D;
[Portland] E Mod;
Arrow 6UC-1L - 9.6" 0°

10-4 G77A (CA)

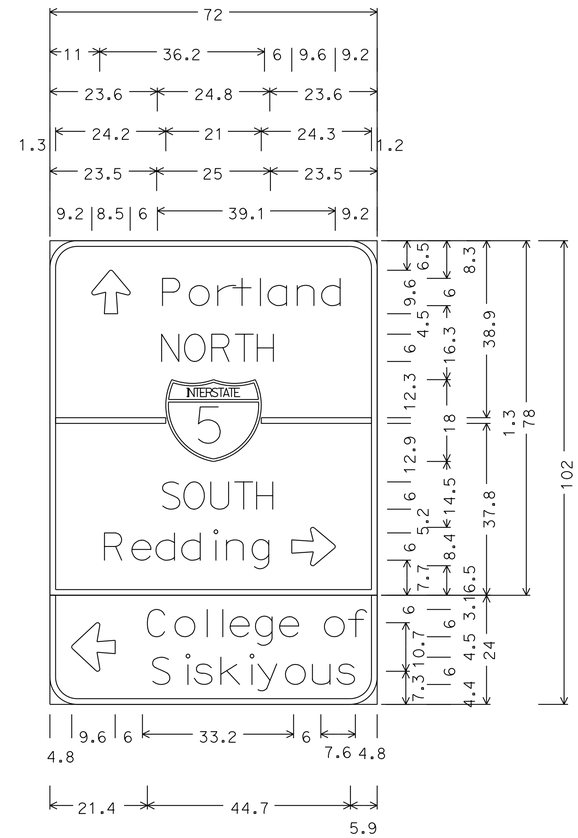

6.0" Radius, 1.3" Border, White on Green;
Arrow 6UC-1L - 9.6" 90°
[Portland] E Mod;
[NORTH] D; [SOUTH] D;
[Redding] E Mod;
Arrow 6UC-1L - 9.6" 0°
6.0" Radius, 1.3" Border, White on Green;
Arrow 6UC-2LH - 9.6" 180°
[College of] E Mod;
[Siskiyous] E Mod;

14-1 G77A (CA)

SIGN DETAILS

NO SCALE

SD-9

REVISED BY	DATE REVISED
TERI ANDERSON	FRANK RIVAS
CALCULATED-DESIGNED BY	CHECKED BY
FUNCTIONAL SUPERVISOR	ROB STINGER

STATE OF CALIFORNIA - DEPARTMENT OF TRANSPORTATION
Caltrans
DESIGN

P:\proj\02\4G820_plans\pse\24g820ob009.dgn

LAST REVISION 06-23-15 | DATE PLOTTED => 26-JUN-2015 | TIME PLOTTED => 09:51

Dist	COUNTY	ROUTE	POST MILES TOTAL PROJECT	SHEET No.	TOTAL SHEETS
02	Sis	5	R10.7/R19.5	231	327

REGISTERED CIVIL ENGINEER 06-23-15 DATE

06-23-15
PLANS APPROVAL DATE

REGISTERED PROFESSIONAL ENGINEER THERESA ANDERSON No. C77957 Exp. 6-30-17 CIVIL STATE OF CALIFORNIA

THE STATE OF CALIFORNIA OR ITS OFFICERS OR AGENTS SHALL NOT BE RESPONSIBLE FOR THE ACCURACY OR COMPLETENESS OF SCANNED COPIES OF THIS PLAN SHEET.

NOTES:

1. USE A 2¼" SQUARE TUBE x 30" LONG, 3/16" THICK ANCHOR FOR 2" POSTS. USE A 3" SQUARE TUBE x 3' LONG, 3/16" THICK ANCHOR FOR 2-1/2 " POSTS.
2. USE A 5/16" CORNER BOLT OR TWO DRIVE RIVETS TO FASTEN ASSEMBLED SIGN AND POST INTO ANCHOR. INSTALL CORNER BOLT OR DRIVE RIVETS INTO THE SIDES FACING TRAFFIC.
3. REMOVE EXISTING AC OR PCC, DRIVE ANCHOR SLEEVE INTO SOIL AND RECAP WITH LIKE MATERIAL, MATCHING EXISTING THICKNESS.
4. 2" POSTS ARE TO BE 1/8" THICK, PERFORATIONS OF 7/16" IN DIAMETER ARE 1" ON CENTER ON ALL SIDES, LENGTHS ARE 10' AND 12'.
5. 2-1/2" POSTS ARE TO BE 1/8" THICK, PERFORATIONS OF 7/16" IN DIAMETER ARE 1" ON CENTER ON ALL SIDES, 2-1/2" POSTS ARE 12' AND 14' IN LENGTH.
6. FOR DETAILS NOT SHOWN, REFER TO THE STANDARD PLANS.
7. 2-1/2" POSTS SHALL BE USED IN SIDEWALK AND HIGH PEDESTRIAN USE PLACEMENTS.
8. ALL ANCHOR SLEEVES SHALL BE EMBEDDED IN PCC, EXCEPT FOR INSTALLATIONS IN PAVEMENTS OR SIDEWALKS.

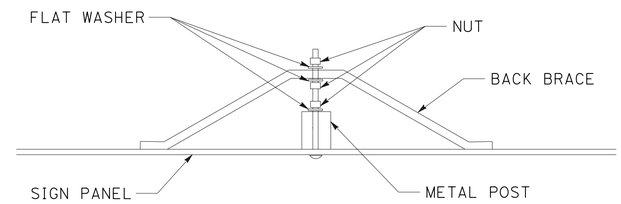

BACK BRACE MOUNTING DETAIL

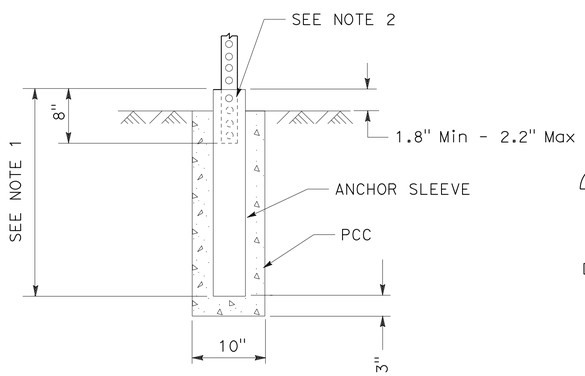

INSTALLATION IN SOIL (PCC)
(SEE NOTE 8)

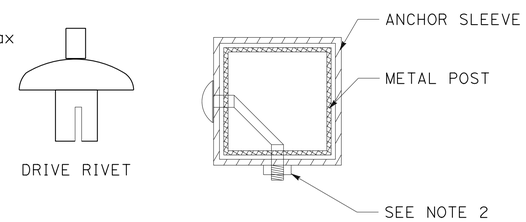

FASTENER DETAILS

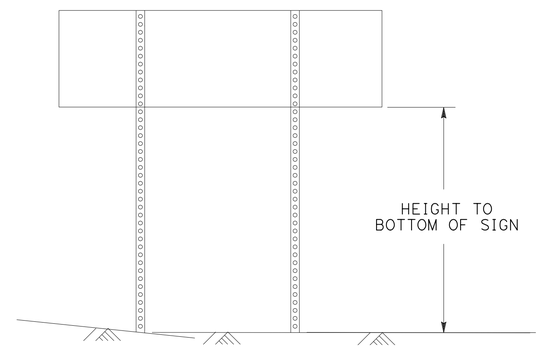

TWO POSTS INSTALLATION
(POST SIZE, SEE CHART BELOW)

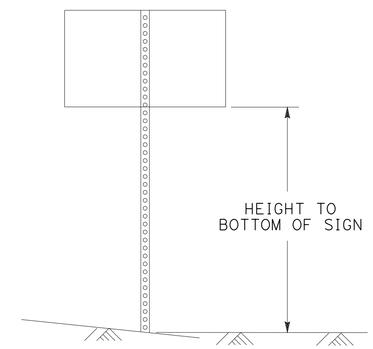

SINGLE POST INSTALLATION
(POST SIZE, SEE CHART BELOW)

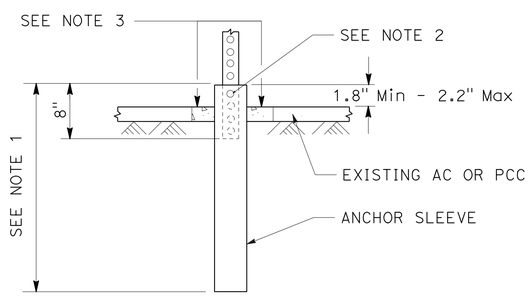

INSTALLATION IN EXISTING AC OR PCC

Max SQFT OF SIGN

POST SIZE	60"	72"	84"	96"	108"	120"
2"	18	16	14	12	10	8
2.5"	35	32	28	24	21	21

HEIGHT TO BOTTOM OF SIGN
DOUBLE POST GROUND SIGNS
70 MPH WIND SPEED

Max SQFT OF SIGN

POST SIZE	60"	72"	84"	96"	108"	120"
2"	10.5	10	8.7	7.4	6.2	5
2.5"	16	16	16	16	12	12

HEIGHT TO BOTTOM OF SIGN
SINGLE POST GROUND SIGNS
70 MPH WIND SPEED

METAL SIGN POST DETAIL

METAL SIGN POST INSTALLATION DETAILS

SIGN DETAILS

NO SCALE **SD-10**

REVISED BY | DATE REVISED
TERI ANDERSON | FRANK RIVAS
CALCULATED-DESIGNED BY | CHECKED BY
FUNCTIONAL SUPERVISOR: ROB STINGER
STATE OF CALIFORNIA - DEPARTMENT OF TRANSPORTATION
Caltrans
DESIGN

P:\proj1\02\4G820_plans\pse\24g820ob010.dgn

LAST REVISION 06-23-15 | DATE PLOTTED => 26-JUN-2015 | TIME PLOTTED => 09:51

Dist	COUNTY	ROUTE	POST MILES TOTAL PROJECT	SHEET No.	TOTAL SHEETS
02	Sis	5	R10.7/R19.5	232	327

REGISTERED CIVIL ENGINEER 06-23-15 DATE

06-23-15
PLANS APPROVAL DATE

REGISTERED PROFESSIONAL ENGINEER TOBY J. CRAWFORD No. C71138 Exp. 6-30-17 CIVIL STATE OF CALIFORNIA

THE STATE OF CALIFORNIA OR ITS OFFICERS OR AGENTS SHALL NOT BE RESPONSIBLE FOR THE ACCURACY OR COMPLETENESS OF SCANNED COPIES OF THIS PLAN SHEET.

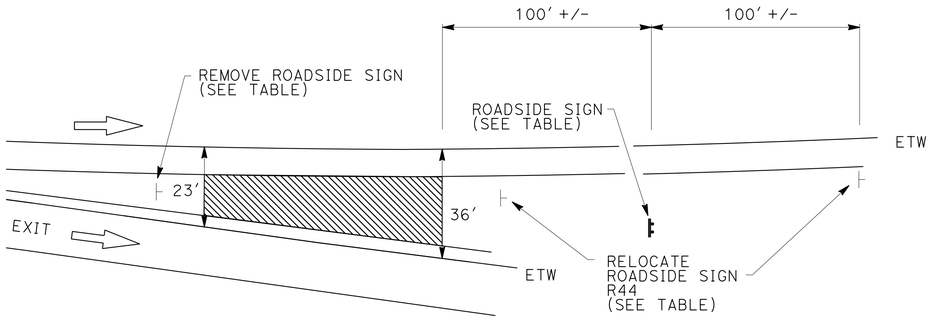

TYPICAL EXIT SIGNING

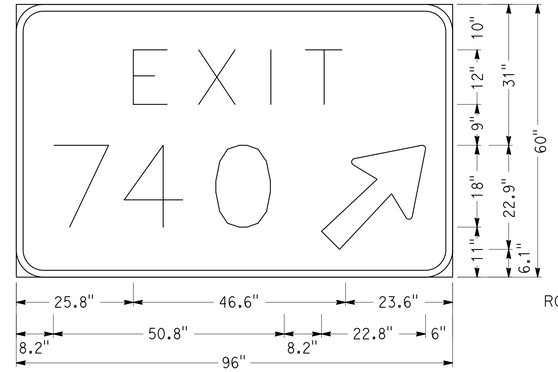

6.0" Radius, 1.5" Border, White on Green;
[EXIT] E 225% spacing; [740] E;
Arrow Custom - 29.3" 45°;

TYPICAL E5-1a SIGN PANEL

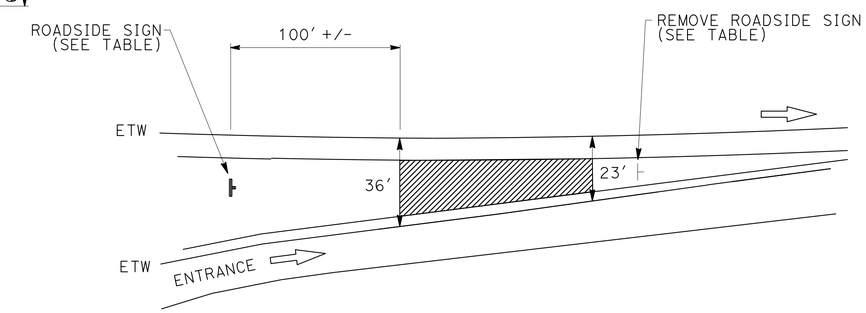

TYPICAL ENTRANCE SIGNING

GORE ROADSIDE SIGN QUANTITIES

RAMP	DIRECTION	EXIT No.	ON RAMP	OFF RAMP	GORE ROADSIDE SIGN QUANTITIES: RELOCATE ROADSIDE SIGN	REMOVE ROADSIDE SIGN*	ROADSIDE SIGN - ONE POST	ROADSIDE SIGN - TWO POST*	(N) WOOD POST 4" X 6" POST LENGTH	SIGN CODE	GORE FURNISH ROADSIDE SIGN PANEL: SINGLE FACED	BACKGROUND COLOR	BACKGROUND RETROREFLECTIVE ASTM TYPE	LEGEND COLOR	LEGEND RETROREFLECTIVE ASTM TYPE	PREMIUM PROTECTIVE FILM	SINGLE SHEET ALUMINUM SIGN FOR RETROREFLECTIVE SHEETING (TYPE XI): PANEL SIZE L x D	0.063" FRAMED**	RETROREFLECTIVE SHEETING (TYPE XI)**	COMMENTS
					EA	EA	EA	EA	LF								In x In	SQFT	SQFT	
N Mt SHASTA Blvd	FSBT	740		X	1	1		1	18, 19	E5-1a	YES	GREEN	XI	WHITE	XI	NO	96" x 60"	40	40	REMOVE EXISTING G84-2 (CA)
ABRAMS LAKE Rd	FSBT		X			1	1		16	W4-1	YES	YELLOW	XI	BLACK	XI	NO	48" x 48"	16	16	REMOVE EXISTING W4-1
	FSBT	741		X		1		1	18, 19	E5-1a	YES	GREEN	XI	WHITE	XI	NO	96" x 60"	40	40	REMOVE EXISTING G84-2 (CA)
TRUCK VILLAGE Dr	FSBT		X			1	1		17	W4-3	YES	YELLOW	XI	BLACK	XI	NO	48" x 48"	16	16	REMOVE EXISTING W4-3
	FSBT	743		X		1		1	18, 18	E5-1a	YES	GREEN	XI	WHITE	XI	NO	96" x 60"	40	40	REMOVE EXISTING G84-2 (CA)
SOUTH WEED	FSBT		X			1	1		16	W4-1	YES	YELLOW	XI	BLACK	XI	NO	48" x 48"	16	16	REMOVE EXISTING W4-1
	FSBT	745		X		1		1	18, 18	E5-1a	YES	GREEN	XI	WHITE	XI	NO	96" x 60"	40	40	REMOVE EXISTING G84-2 (CA)
SOUTH WEED	FNBT		X			1	1		16	W4-1	YES	YELLOW	XI	BLACK	XI	NO	48" x 48"	16	16	REMOVE EXISTING W4-1
	FNBT	745		X	1	1		1	18, 19	E5-1a	YES	GREEN	XI	WHITE	XI	NO	96" x 60"	40	40	REMOVE EXISTING G84-2 (CA)
CENTRAL WEED	FSBT		X			1	1		17	W4-3	YES	YELLOW	XI	BLACK	XI	NO	48" x 48"	16	16	REMOVE EXISTING W4-3
	FNBT	747		X		1		1	18, 19	E5-1a	YES	GREEN	XI	WHITE	XI	NO	96" x 60"	40	40	REMOVE EXISTING G84-2 (CA)
				TOTAL	2	11	5	6									TOTAL	320	320	

*INCLUDED IN SIGN QUANTITY TABLES, SHEET SQ-3
**INCLUDED IN SIGN QUANTITY TABLES, SHEET SQ-5

SIGN DETAILS

NO SCALE **SD-11**

REVISED BY | DATE REVISED
ERIC COVINGTON | TOBY CRAWFORD
CALCULATED-DESIGNED BY | CHECKED BY
FUNCTIONAL SUPERVISOR: STEVE TOPAL
STATE OF CALIFORNIA - DEPARTMENT OF TRANSPORTATION
Caltrans® DESIGN
P:\proj\02\40820_plans\pse\24g820ob011.dgn

LAST REVISION | DATE PLOTTED => 26-JUN-2015 | TIME PLOTTED => 09:51

Dist	COUNTY	ROUTE	POST MILES TOTAL PROJECT	SHEET No.	TOTAL SHEETS
02	Sis	5	R10.7/R19.5	233	327

REGISTERED CIVIL ENGINEER 06-23-15 DATE

06-23-15
PLANS APPROVAL DATE

REGISTERED PROFESSIONAL ENGINEER THERESA ANDERSON No. C77957 Exp. 6-30-17 CIVIL STATE OF CALIFORNIA

THE STATE OF CALIFORNIA OR ITS OFFICERS OR AGENTS SHALL NOT BE RESPONSIBLE FOR THE ACCURACY OR COMPLETENESS OF SCANNED COPIES OF THIS PLAN SHEET.

NOTES:

1. (N) - NOT A SEPARATE PAY ITEM, FOR INFORMATION ONLY.
2. CALIFORNIA SIGN CODES DESIGNATED BY (CA) OTHERWISE FEDERAL MUTCD CODES ARE SHOWN.

ROADSIDE SIGN QUANTITIES

SIGN STATION	SIGN NUMBER	DIRECTION	SIGN CODE	PANEL SIZE	REMOVE ROADSIDE SIGN	RELOCATE SIGN PANEL	ROADSIDE SIGN - TWO POST	INSTALL ROADSIDE SIGN (LAMINATED WOOD BOX POST)	(N) POST SIZE AND LENGTH (LF) METAL POST	WOOD POST				COMMENTS
									2½" x 2½"	4" x 6"	6" x 8"	LAMINATED WOOD BOX POST (TYPE L)	LAMINATED WOOD BOX POST (TYPE M)	
				In x In	EA	EA	EA	EA						
"SB1" 600+29	1-1	FSBT	SG42 (CA)	180 x 72	1									RESET LOGO SIGN PANELS ON NEW SIGN
			SG42 (CA)	180 x 72				1					25, 26.5	
"SB1" 618+44	1-2	FSBT	SG42 (CA)	180 x 120	1									RESET LOGO SIGN PANELS ON NEW SIGN
			SG42 (CA)	180 x 120				1				35, 38		
"SB1" 626+92	1-3	FSBT	SG42 (CA)	180 x 120	1									RESET LOGO SIGN PANELS ON NEW SIGN
			SG42 (CA)	180 x 120				1				33, 36		
"SB1" 672+30	3-1	FSBT	SG42 (CA)	180 x 72	1									RESET LOGO SIGN PANELS ON NEW SIGN
			SG42 (CA)	180 x 72				1					22, 22	
"SB1" 697+94	4-1	FWBT	G8 (CA)	66 x 18	1									
			G48	26 x 12										
			G27	24 x 24										
			M6	21 x 15										
			G78 (CA)	66 x 42			1		13, 15					
"SB1" 698+17	4-2	FSBT	G83 (CA)	192 x 78	1									
			SPL	228 x 30										
"SB1" 712+69	4-3	FSBT	G85 (CA)	240 x 78	1									
"SB1" 743+69	5-1	FSBT	G16 (CA)	120 x 36	1									
			G16 (CA)	144 x 36			1			14.5, 13				
"SB1" 764+72	6-1	FSBT	G83 (CA)	204 x 78	1									
"SB1" 832+72	7-1	FSBT	G85 (CA)	264 x 102	1									
"NB1" 844+45	7-2	FNBT	G83 (CA)	96 x 102	1									
			G66 (CA)	24 x 24										
"SB1" 884+24	8-1	FSBT	G83 (CA)	204 x 102	1									
			D9	30 x 30										
			SUBTOTAL THIS SHEET		12		2	4						

SIGN QUANTITIES

SQ-1

REVISED BY | DATE REVISED
TERI ANDERSON | FRANK RIVAS
CALCULATED-DESIGNED BY | CHECKED BY
FUNCTIONAL SUPERVISOR: ROB STINGER

STATE OF CALIFORNIA - DEPARTMENT OF TRANSPORTATION
Caltrans DESIGN

P:\proj1\02\4G820_plans\pse\24g820od001.dgn

LAST REVISION 06-23-15 | DATE PLOTTED => 26-JUN-2015 | TIME PLOTTED => 09:51

Dist	COUNTY	ROUTE	POST MILES TOTAL PROJECT	SHEET No.	TOTAL SHEETS
02	Sis	5	R10.7/R19.5	234	327

REGISTERED CIVIL ENGINEER 06-23-15 DATE

06-23-15
PLANS APPROVAL DATE

REGISTERED PROFESSIONAL ENGINEER THERESA ANDERSON No. C77957 Exp. 6-30-17 CIVIL STATE OF CALIFORNIA

THE STATE OF CALIFORNIA OR ITS OFFICERS OR AGENTS SHALL NOT BE RESPONSIBLE FOR THE ACCURACY OR COMPLETENESS OF SCANNED COPIES OF THIS PLAN SHEET.

NOTE:

1. (N) - NOT A SEPARATE PAY ITEM, FOR INFORMATION ONLY.

ROADSIDE SIGN QUANTITIES

SIGN STATION	SIGN NUMBER	DIRECTION	SIGN CODE	PANEL SIZE	REMOVE ROADSIDE SIGN	RELOCATE SIGN PANEL	ROADSIDE SIGN - TWO POST	INSTALL ROADSIDE SIGN (LAMINATED WOOD BOX POST)	(N) POST SIZE AND LENGTH (LF) METAL POST	WOOD POST				COMMENTS
									2½" x 2½"	4" x 6"	6" x 8"	LAMINATED WOOD BOX POST (TYPE L)	LAMINATED WOOD BOX POST (TYPE M)	
				In x In	EA	EA	EA	EA						
"SB1" 920+95	10-1	FEBT	G8 (CA)	66 x 36	1									
			M3	26 x 12										
			M3	26 x 12										
			G27	24 x 24										
			G27	24 x 24										
			M6	21 x 15										
			M6	21 x 15										
			G77A (CA)	66 x 78		1				16, 16				
"NB1" 921+31	10-2	FEBT	G8 (CA)	66 x 18	1									
			M3	26 x 12										
			G27	24 x 24										
			M6	21 x 15										
			G78 (CA)	66 x 42		1			10.75, 9					
"NB1" 921+91	10-3	FWBT	G8 (CA)	66 x 18	1									
			M3	26 x 12										
			G27	24 x 24										
			M6	21 x 15										
			G8	66 x 42		1			10.75, 9					
"NB1" 922+15	10-4	FWBT	G8 (CA)	66 x 36	1									
			M3	26 x 12										
			M3	26 x 12										
			G27	24 x 24										
			G27	24 x 24										
			M6	21 x 15										
			M6	21 x 15										
			G77A (CA)	66 x 78		1				18.5, 18				
SUBTOTAL THIS SHEET					4		4							

SIGN QUANTITIES

SQ-2

REVISED BY | DATE REVISED
TERI ANDERSON | FRANK RIVAS
CALCULATED-DESIGNED BY | CHECKED BY
FUNCTIONAL SUPERVISOR: ROB STINGER

STATE OF CALIFORNIA - DEPARTMENT OF TRANSPORTATION
Caltrans
DESIGN

P:\proj1\02\4G820_plans\pse\24g820od002.dgn

LAST REVISION 06-23-15 | DATE PLOTTED => 26-JUN-2015 | TIME PLOTTED => 09:51

Dist	COUNTY	ROUTE	POST MILES TOTAL PROJECT	SHEET No.	TOTAL SHEETS
02	Sis	5	R10.7/R19.5	235	327

REGISTERED CIVIL ENGINEER 06-23-15 DATE

06-23-15
PLANS APPROVAL DATE

REGISTERED PROFESSIONAL ENGINEER THERESA ANDERSON No. C77957 Exp. 6-30-17 CIVIL STATE OF CALIFORNIA

THE STATE OF CALIFORNIA OR ITS OFFICERS OR AGENTS SHALL NOT BE RESPONSIBLE FOR THE ACCURACY OR COMPLETENESS OF SCANNED COPIES OF THIS PLAN SHEET.

NOTE:

1. (N) - NOT A SEPARATE PAY ITEM, FOR INFORMATION ONLY.

ROADSIDE SIGN QUANTITIES

SIGN STATION	SIGN NUMBER	DIRECTION	SIGN CODE	PANEL SIZE	REMOVE ROADSIDE SIGN	RELOCATE SIGN PANEL	ROADSIDE SIGN - TWO POST	INSTALL ROADSIDE SIGN (LAMINATED WOOD BOX POST)	(N) POST SIZE AND LENGTH (LF) METAL POST	WOOD POST				COMMENTS
									2½" x 2½"	4" x 6"	6" x 8"	LAMINATED WOOD BOX POST (TYPE L)	LAMINATED WOOD BOX POST (TYPE M)	
				In x In	EA	EA	EA	EA						
"SB1" 936+37	11-1	FSBT	G85 (CA)	204 x 84	1									
			D9	30 x 30										
"SB1" 947+62	12-1	FSBT	SG42 (CA)	180 x 120	1									RESET LOGO SIGN PANELS ON NEW SIGN
			SG42 (CA)	180 x 120				1				29.5, 34		
"NB1" 949+20	12-2	FNBT	SG42 (CA)	180 x 120	1									RESET LOGO SIGN PANELS ON NEW SIGN
			SG42 (CA)	180 x 120				1				28.5, 29.5		
"SB1" 965+27	12-3	FSBT	SG42 (CA)	180 x 72	1									RESET LOGO SIGN PANELS ON NEW SIGN
			SG42 (CA)	180 x 72				1					22, 19	
"NB1" 957+10	12-4	FNBT	G83 (CA)	216 x 102	1									
			G81 (CA)	120 x 30										RELOCATE SIGN PANELS TO 13-5
			G66 (CA)	24 x 24										
			RM-010	30 x 30										
"SB1" 973+19	13-1	FSBT	SG42 (CA)	180 x 72	1									RESET LOGO SIGN PANELS ON NEW SIGN
			SG42 (CA)	180 x 72				1					22, 22	
"NB1" 967+39	13-2	FNBT	SG42 (CA)	180 x 120	1									RESET LOGO SIGN PANELS ON NEW SIGN
			SG42 (CA)	180 x 120				1				28, 29		
"NB1" 984+18	13-3	FNBT	SG42 (CA)	180 x 72	1									RESET LOGO SIGN PANELS ON NEW SIGN
			SG42 (CA)	180 x 120				1				29, 31.5		
"SB1" 989+17	13-4	FSBT	G83 (CA)	204 x 78	1									
			D9	30 x 30										
"NB1" 977+94	13-5	FNBT	G81 (CA)	120 x 30		1								PLACE BELOW Exist G86 (CA)
			G66 (CA)	24 x 24		1								PLACE ON Lt POST
			RM-010	30 x 30		1								PLACE ON Rt POST
"SB1" 999+93	14-1	FNBT	G77 (CA)	78 x 96	1									
			G77A (CA)	72 x 102			1				19.5, 19.5			
FROM SHEET SD-11					11		6							
FROM SHEET SQ-1					12		2	4						
FROM SHEET SQ-2					4		4							
TOTAL					37	3	13	10						

SIGN QUANTITIES

SQ-3

REVISED BY | DATE REVISED
TERI ANDERSON | FRANK RIVAS
CALCULATED-DESIGNED BY | CHECKED BY
FUNCTIONAL SUPERVISOR: ROB STINGER

STATE OF CALIFORNIA - DEPARTMENT OF TRANSPORTATION
Caltrans
DESIGN

P:\proj\02\40820_plans\pse\24g820od003.dgn

LAST REVISION 06-23-15 | DATE PLOTTED => 26-JUN-2015 | TIME PLOTTED => 09:51

Dist	COUNTY	ROUTE	POST MILES TOTAL PROJECT	SHEET No.	TOTAL SHEETS
02	Sis	5	R10.7/R19.5	236	327

REGISTERED CIVIL ENGINEER 06-23-15 DATE

06-23-15
PLANS APPROVAL DATE

REGISTERED PROFESSIONAL ENGINEER THERESA ANDERSON No. C77957 Exp. 6-30-17 CIVIL STATE OF CALIFORNIA

THE STATE OF CALIFORNIA OR ITS OFFICERS OR AGENTS SHALL NOT BE RESPONSIBLE FOR THE ACCURACY OR COMPLETENESS OF SCANNED COPIES OF THIS PLAN SHEET.

OVERHEAD SIGN STRUCTURE QUANTITIES

SIGN STATION	SIGN No.	SHEET No.	DIRECTION	SIGN CODE	PANEL SIZE WIDTH	PANEL SIZE HEIGHT	REMOVE SIGN STRUCTURE (EA)	60" CAST-IN-DRILLED-HOLE CONCRETE PILE (SIGN FOUNDATION)	FURNISH SIGN STRUCTURE (TRUSS)	INSTALL SIGN STRUCTURE (TRUSS)
					In	In	EA	LF	LB	LB
"SB1" 608+97	A	S-1	FSBT	G83 (CA)	192	100		22	13,305	13,305
"SB1" 654+60	B	S-2	FSBT	G85 (CA)	264	100		22	12,535	12,535
"SB1" 698+17	C	S-4	FSBT	G83 (CA)	264	100		22	12,665	12,665
"SB1" 712+70	D	S-4	FSBT	G85 (CA)	264	100		22	13,305	13,305
"SB1" 764+72	E	S-6	FSBT	G83 (CA)	264	100		22	13,360	13,360
"SB1" 832+72	F	S-7	FSBT	G85 (CA)	264	120		23	15,225	15,225
"NB1" 844+45	G	S-7	FNBT	G83 (CA)	168	100		22	13,260	13,260
"SB1" 884+24	H	S-8	FSBT	G83 (CA)	264	120		23	15,145	15,145
"NB1" 904+03	I	S-9	FNBT	G85 (CA)	168	100		22	12,895	12,895
"SB1" 938+50	J	S-11	FSBT	G85 (CA)	168	100		22	12,925	12,925
"NB1" 957+10	K	S-12	FNBT	G83 (CA)	288	100		23	16,415	16,415
"SB1" 989+17	L	S-13	FSBT	G83 (CA)	168	100		22	12,080	12,080
"NB1" 995+02	M	S-14	FNBT	G85 (CA)	312	90		22	14,120	14,120
"SB1" 608+82	N	S-1	FSBT	G83 (CA)			1			
"SB1" 654+45	O	S-2	FSBT	G85 (CA)			1			
"NB1" 904+16	P	S-9	FNBT	G85 (CA)			1			
"NB1" 995+18	Q	S-14	FNBT	G85 (CA)			1			
						TOTAL	4	289	177,235	177,235

SIGN QUANTITIES

SQ-4

REVISED BY | DATE REVISED

TERI ANDERSON | FRANK RIVAS

CALCULATED-DESIGNED BY | CHECKED BY

FUNCTIONAL SUPERVISOR: ROB STINGER

STATE OF CALIFORNIA - DEPARTMENT OF TRANSPORTATION

Caltrans® DESIGN

P:\proj1\02\4G820_plans\pse\24g820od004.dgn

LAST REVISION 06-23-15 | DATE PLOTTED => 26-JUN-2015 | TIME PLOTTED => 09:51

Dist	COUNTY	ROUTE	POST MILES TOTAL PROJECT	SHEET No.	TOTAL SHEETS
02	Sis	5	R10.7/R19.5	237	327

REGISTERED CIVIL ENGINEER 06-23-15 DATE

06-23-15
PLANS APPROVAL DATE

REGISTERED PROFESSIONAL ENGINEER THERESA ANDERSON No. C77957 Exp. 6-30-17 CIVIL STATE OF CALIFORNIA

THE STATE OF CALIFORNIA OR ITS OFFICERS OR AGENTS SHALL NOT BE RESPONSIBLE FOR THE ACCURACY OR COMPLETENESS OF SCANNED COPIES OF THIS PLAN SHEET.

FURNISH ROADSIDE SIGN PANEL

SIGN STATION	SIGN NUMBER	DIRECTION	SIGN CODE	WIDTH	HEIGHT	MESSAGE	SINGLE FACED	BACKGROUND COLOR	BACKGROUND RETROREFLECTIVE ASTM TYPE	LEGEND COLOR	LEGEND RETROREFLECTIVE ASTM TYPE	PREMIUM PROTECTIVE FILM	FURNISH SINGLE SHEET ALUMINUM SIGN FOR RETROREFLECTIVE SHEETING (TYPE XI) 0.063" - UNFRAMED	0.063" - FRAMED	0.080" - FRAMED	FURNISH LAMINATED PANEL SIGN (1" - TYPE B) FOR RETROREFLECTIVE SHEETING (TYPE XI)	* RETROREFLECTIVE SHEETING (TYPE XI)
				In	In								SQFT	SQFT	SQFT	SQFT	SQFT
"SB1" 600+29	1-1	FSBT	SG42 (CA)	180	72	FUEL NEXT RIGHT	X	BLUE	XI	WHITE	XI	X				90	90.0
"SB1" 618+44	1-2	FSBT	SG42 (CA)	180	120	FOOD NEXT RIGHT	X	BLUE	XI	WHITE	XI	X				150	150.0
"SB1" 626+92	1-3	FSBT	SG42 (CA)	180	120	LODGING - EXIT 738	X	BLUE	XI	WHITE	XI	X				150	150.0
"SB1" 672+30	3-1	FSBT	SG42 (CA)	180	72	CAMPING - EXIT 740	X	BLUE	XI	WHITE	XI	X				90	90.0
"SB1" 697+94	4-1	FWBT	G78	66	42	SOUTH; REDDING; (ARROW)	X	GREEN	XI	WHITE	XI	X		19.3			19.3
"SB1" 743+69	5-1	FSBT	G16 (CA)	144	36	BLACK BUTTE SUMMIT	X	GREEN	XI	WHITE	XI	X				36	36.0
"SB1" 920+95	10-1	FEBT	G77A (CA)	66	78	PORTLAND; NORTH; SOUTH; REDDING	X	GREEN	XI	WHITE	XI	X		35.8			35.8
"NB1" 921+31	10-2	FEBT	G78 (CA)	66	42	NORTH; PORTLAND	X	GREEN	XI	WHITE	XI	X		19.3			19.3
"NB1" 921+91	10-3	FWBT	G8	66	42	SOUTH; REDDING; (ARROW)	X	GREEN	XI	WHITE	XI	X		19.3			19.3
"NB1" 922+15	10-4	FWBT	G77A (CA)	66	78	REDDING; SOUTH; NORTH; PORTLAND	X	GREEN	XI	WHITE	XI	X		35.8			35.8
"SB1" 947+62	12-1	FSBT	SG42 (CA)	180	120	FUEL - EXIT 745	X	BLUE	XI	WHITE	XI	X				150	150.0
"NB1" 949+20	12-2	FNBT	SG42 (CA)	180	120	LODGING - EXIT 747	X	BLUE	XI	WHITE	XI	X				150	150.0
"SB1" 965+27	12-3	FSBT	SG42 (CA)	180	72	LODGING - EXIT 745	X	BLUE	XI	WHITE	XI	X				90	90.0
"SB1" 973+19	13-1	FSBT	SG42 (CA)	180	72	CAMPING NEXT RIGHT	X	BLUE	XI	WHITE	XI	X				90	90.0
"NB1" 967+39	13-2	FNBT	SG42 (CA)	180	120	FOOD - EXIT 747	X	BLUE	XI	WHITE	XI	X				150	150.0
"NB1" 984+18	13-3	FNBT	SG42 (CA)	180	120	FUEL NEXT RIGHT	X	BLUE	XI	WHITE	XI	X				150	150.0
"NB1" 977+94	13-5	FNBT	G81 (CA)	120	30	TOURIST INFO	X	GREEN	XI	WHITE	XI	X			25		25.0
			G66 (CA)	30	30	STAA SYMBOL	X	BLUE	XI	WHITE	XI	X	6.3				6.3
			RM-010	30	30	CAMPING SYMBOL	X	BROWN	XI	WHITE	XI	X	6.3				6.3
"SB1" 999+93	14-1	FNBT	G77A (CA)	72	102	PORTLAND; NORTH; SOUTH; REDDING; COLLEGE OF THE SISKIYOUS	X	GREEN	XI	WHITE	XI	X			51		51.0
												FROM SHEET SD-11		320.0			320.0
												TOTAL	12.6	449.5	76	1296	1834.1

* INCLUDED IN FURNISH OVERHEAD SIGN PANEL QUANTITIES (SQ-6)

SIGN QUANTITIES

SQ-5

REVISED BY | DATE REVISED
TERI ANDERSON | FRANK RIVAS
CALCULATED-DESIGNED BY | CHECKED BY
FUNCTIONAL SUPERVISOR: ROB STINGER
STATE OF CALIFORNIA - DEPARTMENT OF TRANSPORTATION
Caltrans DESIGN
P:\proj1\02\4G820_plans\pse\24g820od005.dgn

LAST REVISION 06-23-15 | DATE PLOTTED => 26-JUN-2015 | TIME PLOTTED => 09:51

Dist	COUNTY	ROUTE	POST MILES TOTAL PROJECT	SHEET No.	TOTAL SHEETS
02	Sis	5	R10.7/R19.5	238	327

REGISTERED CIVIL ENGINEER 06-23-15 DATE

06-23-15
PLANS APPROVAL DATE

REGISTERED PROFESSIONAL ENGINEER THERESA ANDERSON No. C77957 Exp. 6-30-17 CIVIL STATE OF CALIFORNIA

THE STATE OF CALIFORNIA OR ITS OFFICERS OR AGENTS SHALL NOT BE RESPONSIBLE FOR THE ACCURACY OR COMPLETENESS OF SCANNED COPIES OF THIS PLAN SHEET.

FURNISH OVERHEAD SIGN PANEL

SIGN STATION	SIGN No.	DIRECTION	SIGN CODE	PANEL SIZE		BACKGROUND		LEGEND		FURNISH SIGN PANEL		
				WIDTH	HEIGHT	COLOR	RETROREFLECTIVE ASTM TYPE	COLOR	REFLECTIVE ASTM TYPE	FORMED PANEL SIGN (OVERHEAD) FOR RETROREFLECTIVE SHEETING (TYPE XI)	PROTECTIVE OVERLAY	RETROREFLECTIVE SHEETING (TYPE XI)
				In	In					SQFT		SQFT
"SB1" 608+97	A	FSBT	G83 (CA)	192	100	GREEN	XI	WHITE	XI	133.3	X	133.3
"SB1" 654+60	B	FSBT	G85 (CA)	264	100	GREEN	XI	WHITE	XI	183.3	X	183.3
"SB1" 698+17	C	FSBT	G83 (CA)	264	100	GREEN	XI	WHITE	XI	183.3	X	183.3
"SB1" 712+70	D	FSBT	G85 (CA)	264	100	GREEN	XI	WHITE	XI	183.3	X	183.3
"SB1" 764+72	E	FSBT	G83 (CA)	264	100	GREEN	XI	WHITE	XI	183.3	X	183.3
"SB1" 832+72	F	FSBT	G85 (CA)	264	120	GREEN	XI	WHITE	XI	220.0	X	220.0
"NB1" 844+45	G	FNBT	G83 (CA)	168	100	GREEN	XI	WHITE	XI	116.7	X	116.7
"SB1" 884+24	H	FSBT	G83 (CA)	264	120	GREEN	XI	WHITE	XI	220.0	X	220.0
"NB1" 904+03	I	FNBT	G85 (CA)	168	100	GREEN	XI	WHITE	XI	116.7	X	116.7
"SB1" 938+50	J	FSBT	G85 (CA)	168	100	GREEN	XI	WHITE	XI	116.7	X	116.7
"NB1" 957+10	K	FNBT	G83 (CA)	288	100	GREEN	XI	WHITE	XI	200.0	X	200.0
"SB1" 989+17	L	FSBT	G83 (CA)	168	100	GREEN	XI	WHITE	XI	116.7	X	116.7
"NB1" 995+02	M	FNBT	G85 (CA)	312	90	GREEN	XI	WHITE	XI	195.0	X	195.0
FROM FURNISH ROADSIDE SIGN PANEL (SQ-5)												1834.1
TOTAL										2168.3		4002.4

SIGN QUANTITIES

SQ-6

REVISED BY | DATE REVISED
TERI ANDERSON | FRANK RIVAS
CALCULATED-DESIGNED BY | CHECKED BY
FUNCTIONAL SUPERVISOR: ROB STINGER

STATE OF CALIFORNIA - DEPARTMENT OF TRANSPORTATION
Caltrans® DESIGN

P:\proj1\02\4g820_plans\pse\24g820od006.dgn

LAST REVISION 06-23-15 | DATE PLOTTED => 26-JUN-2015 | TIME PLOTTED => 09:51

Dist	COUNTY	ROUTE	POST MILES TOTAL PROJECT	SHEET No.	TOTAL SHEETS
02	Sis	5	R10.7/R19.5	239	327

Russell Flood 06-23-15
REGISTERED CIVIL ENGINEER DATE

06-23-15
PLANS APPROVAL DATE

REGISTERED PROFESSIONAL ENGINEER RUSSELL P. FLOOD No. C72261 Exp. 6-30-16 CIVIL STATE OF CALIFORNIA

THE STATE OF CALIFORNIA OR ITS OFFICERS OR AGENTS SHALL NOT BE RESPONSIBLE FOR THE ACCURACY OR COMPLETENESS OF SCANNED COPIES OF THIS PLAN SHEET.

NOTE:

1. (N) - NOT A SEPARATE PAY ITEM, FOR INFORMATION ONLY.

HMA (MISCELLANEOUS AREA) AND DIKE QUANTITIES

STATION	LAYOUT SHEET	NORTHBOUND	SOUTHBOUND	REMOVE ASPHALT CONCRETE PAVEMENT (SQFT)	REMOVE ASPHALT CONCRETE DIKE	** COLD PLANE ASPHALT CONCRETE PAVEMENT	* HOT MIX ASPHALT (TYPE A)	PLACE HOT MIX ASPHALT DIKE (TYPE A)	PLACE HOT MIX ASPHALT DIKE (TYPE E)	PLACE HOT MIX ASPHALT DIKE (TYPE F)	PLACE HOT MIX ASPHALT (MISCELLANEOUS AREA)	* TACK COAT
				SQFT	LF	SQYD	TON	LF	LF	LF	SQYD	TON
"SB1" 610+80 TO 636+05	L-1/L-2		X		2525		138		2525			
"SB1" 634+10 TO 650+70	L-2		X	8315			333				924	
"NMS1" 47+00 TO "SB1" 658+47	L-2		X	7441	1141		360		1141		827	0.2
"SB1" 658+47 TO 661+50	L-2/L-3		X		308	606	126		308		606	
"SB1" 661+50 TO 667+00	L-3		X	2750	550		140		550		306	0.1
"SB1" 674+10 TO 683+48.3	L-3		X	4989			200				554	
"SB1" 677+50 TO 682+90	L-3		X		540		15			540		
"SB1" 687+74 TO 707+27.5	L-4		X	21,408	1616		945		1616		2379	
"SB1" 725+40 TO 745+87	L-5/L-6		X	18,349			845		2038		2039	
"SB1" 760+88 TO 770+88	L-6		X	7007	990		334		990		779	
"SB1" 792+96 TO 808+21	L-7/L-8		X	27,035			1165		1530		3004	
"SB1" 796+34 TO 800+07	L-7		X	3680			147				409	
"SB1" 796+38.2 TO 799+14.5	L-7		X		273		15		273			
"SB1" 833+00 TO 834+40	L-9		X			126	23				126	
"NB1" 909+90 TO 912+00	L-13/L-14	X		2912			58				324	
"NB1" 938+18.5 TO 939+02	L-15	X				103	18				103	
"SB1" 961+50 TO 972+68	L-16/L-17		X	4639			265		1098		568	
"NB1" 970+33.5 TO 971+22	L-17	X				85	15				85	
FROM DRAINAGE QUANTITIES TABLE (DQ-2)							1				3	
FROM SCQ-3				102,471								
FROM RAMP QUANTITIES TABLE (Q-3)				11,511				353			1279	
FROM GUARDRAIL QUANTITIES TABLE (Q-4)				3797								
TOTAL				226,304	7943	920	5143	353	12,069	540	14,315	0.3

* INCLUDED IN HOT MIX ASPHALT QUANTITIES TABLE (Q-2)
** INCLUDED IN ROADWAY QUANTITIES TABLE

ROADWAY QUANTITIES

STATION	LAYOUT SHEET	NORTHBOUND	SOUTHBOUND	COLD PLANE ASPHALT CONCRETE PAVEMENT	SHOULDER BACKING	ASPHALT-RUBBER BINDER	PRECOATED SCREENINGS	CRACK AND SEAT	SHOULDER RUMBLE STRIP (HMA, GROUND-IN INDENTATIONS)
				SQYD	TON	TON	TON	SQYD	STA
"SB1" 580+00 TO 584+00			X						4.0
"NB1" 585+00 TO 841+62		X							466.8
"SB1" 601+40 TO 631+50	L-1		X	12,722	472	22	141	8042	60.2
"SB1" 631+50 TO 659+50	L-2		X	13,831	435	21	133	7614	52.9
"SB1" 659+50 TO 687+50	L-3		X	13,167	434	21	133	7627	51.0
"SB1" 687+50 TO 716+50	L-4		X	16,362	443	26	165	9426	55.4
"SB1" 716+50 TO 745+50	L-5		X	18,064	456	32	205	11,718	58.0
"SB1" 745+50 TO 773+50	L-6		X	17,444	442	31	198	11,321	56.0
"SB1" 773+50 TO 801+50	L-7		X	17,442	441	31	198	11,300	56.0
"SB1" 801+50 TO 829+50	L-8		X	12,836	396	20	126	7211	50.8
"SB1" 829+50 TO 841+86.5	L-9		X	5761	195	9	58	3334	23.0
"SB1" 843+81.3 TO 857+50	L-9		X	5789	216	10	64	3665	27.4
"NB1" 844+06 TO 856+50	L-9	X		6018	225	11	69	3943	24.9
"SB1" 857+50 TO 871+50	L-10		X	7298	221	13	81	4634	28.0
"NB1" 856+50 TO 869+50	L-10	X		5648	205	10	62	3517	26.0
"SB1" 871+50 TO 885+50	L-11		X	7861	221	15	98	5611	28.0
"NB1" 869+50 TO 883+50	L-11	X		6016	221	10	66	3763	28.0
"SB1" 885+50 TO 898+50	L-12		X	7294	204	14	92	5251	26.0
"NB1" 883+50 TO 897+50	L-12	X		5994	221	10	66	3745	28.0
"SB1" 898+50 TO 911+50	L-13		X	8621	197	14	91	5222	23.2
"NB1" 897+50 TO 911+50	L-13	X		6742	177	10	67	3839	25.6
"SB1" 911+50 TO 920+58	L-14		X	5123	140	10	63	3623	18.2
"SB1" 922+13.7 TO 925+50	L-14		X	1910	53	4	24	1351	6.7
"NB1" 911+50 TO 920+82	L-14	X		4009	147	7	44	2528	18.6
"NB1" 922+82 TO 925+50	L-14	X		1313	48	2	15	842	5.4
"SB1" 925+50 TO 939+50	L-15		X	8930	212	15	100	5712	24.5
"NB1" 925+50 TO 939+50	L-15	X		7131	211	10	66	3797	25.0
"SB1" 939+50 TO 966+50	L-16		X	17,432	427	29	190	10,834	54.0
"NB1" 939+50 TO 965+50	L-16	X		11,080	408	19	123	7048	52.0
"SB1" 966+50 TO 988+94	L-17		X	14,361	351	24	156	8938	44.9
"NB1" 965+50 TO 987+83.3	L-17	X		9450	354	16	105	5996	44.7
"SB1" 990+92.9 TO 993+50	L-17		X	1458	41	3	18	1017	5.1
"NB1" 990+72 TO 993+50	L-17	X		1168	44	2	14	775	5.6
"SB1" 993+50 TO 1005+73.5	L-18		X	6166	185	9	58	3326	20.2
"NB1" 993+50 TO 1005+85.7	L-18	X		5944	175	9	59	3373	22.3
FROM SCQ-3					1156				
FROM PROFILE SMOOTHING QUANTITIES (Q-5)				800					
FROM HMA (Misc AREA) & DIKE QUANTITIES				920					
FROM RAMPS QUANTITIES (Q-3)				23,386	1289				
FROM GUARDRAIL QUANTITIES TABLE (Q-4)				1690					
TOTAL				317,180	11,065	489	3148	179,943	1546.4

SUMMARY OF QUANTITIES

Q-1

REVISED BY | DATE REVISED
RUSSELL FLOOD | GINNY SEIBERT
CALCULATED-DESIGNED BY | CHECKED BY
FUNCTIONAL SUPERVISOR | STEVE TOPAL

STATE OF CALIFORNIA - DEPARTMENT OF TRANSPORTATION
Caltrans
DESIGN

P:\proj1\02\46820_plans\pse\24g820pa001.dgn

LAST REVISION 05-20-15 | DATE PLOTTED => 26-JUN-2015 | TIME PLOTTED => 09:51

Dist	COUNTY	ROUTE	POST MILES TOTAL PROJECT	SHEET No.	TOTAL SHEETS
02	Sis	5	R10.7/R19.5	240	327

Russell Flood 06-23-15
REGISTERED CIVIL ENGINEER DATE

06-23-15
PLANS APPROVAL DATE

REGISTERED PROFESSIONAL ENGINEER RUSSELL P. FLOOD No. C72261 Exp. 6-30-16 CIVIL STATE OF CALIFORNIA

THE STATE OF CALIFORNIA OR ITS OFFICERS OR AGENTS SHALL NOT BE RESPONSIBLE FOR THE ACCURACY OR COMPLETENESS OF SCANNED COPIES OF THIS PLAN SHEET.

NOTE:

1. (N) - NOT A SEPARATE PAY ITEM, FOR INFORMATION ONLY.

HOT MIX ASPHALT QUANTITIES

STATION	(N) HMA DEPTH (OUTSIDE SHOULDER)	(N) HMA DEPTH (MEDIAN SHOULDER)	(N) RHMA (GAP GRADED) DEPTH (OUTSIDE SHOULDER)	(N) RHMA (GAP GRADED) DEPTH (MEDIAN SHOULDER)	(N) HOT MIX ASPHALT (GEOMETRIC) AVERAGE DEPTH	RUBBERIZED HOT MIX ASPHALT (GAP GRADED)	HOT MIX ASPHALT (TYPE A)	HOT MIX ASPHALT (GEOMETRIC)	TACK COAT
	FT	FT	FT	FT	FT	TON	TON	TON	TON
"SB1" 601+40 TO 644+00	0.0	0.0	0.2	0.2	0.2	2651	3261	1468	11.5
"SB1" 644+00 TO 647+00	0.2	0.0	0.2	0.2	0.3	204	277	149	0.9
"SB1" 647+00 TO 673+50	0.0	0.0	0.2	0.2	0.2	1682	2301	978	7.5
"SB1" 673+50 TO 678+80	0.2	0.0	0.2	0.2	0.4	320	492	377	1.5
"SB1" 678+80 TO 686+68	0.4	0.0	0.2	0.2	0.4	623	1160	886	3.2
"SB1" 686+68 TO 708+56	0.0	0.0	0.2	0.2	0.2	1448	1943	874	6.4
"SB1" 708+56 TO 712+68	0.4	0.0	0.2	0.2	0.2	457	844	356	2.3
"SB1" 712+68 TO 760+50	0.0	0.0	0.2	0.2	0.2	4145	5502	2751	18.4
"SB1" 760+50 TO 763+00	0.2	0.0	0.2	0.2	0.4	217	328	252	1.0
"SB1" 763+00 TO 780+00	0.0	0.0	0.2	0.2	0.2	1485	1971	887	6.6
"SB1" 780+00 TO 782+00	0.2	0.0	0.2	0.2	0.4	175	264	203	0.8
"SB1" 782+00 TO 783+50	0.0	0.0	0.2	0.2	0.3	130	173	108	0.6
"SB1" 783+50 TO 787+00	0.2	0.4	0.2	0.2	0.6	304	571	564	1.6
"SB1" 787+00 TO 795+50	0.2	0.0	0.2	0.2	0.3	735	1112	659	3.5
"SB1" 795+50 TO 799+35	0.0	0.2	0.2	0.2	0.2	333	503	210	1.6
"SB1" 799+35 TO 805+50	0.4	0.2	0.2	0.2	0.3	581	1117	524	3.0
"SB1" 805+50 TO 807+00	0.2	0.2	0.2	0.2	0.2	102	163	55	0.5
"SB1" 807+00 TO 808+65	0.0	0.0	0.2	0.2	0.3	109	127	82	0.5
"SB1" 814+25 TO 821+50	0.2	0.2	0.2	0.2	0.5	438	731	626	2.2
"SB1" 821+50 TO 823+00	0.2	0.0	0.2	0.2	0.3	91	139	72	0.4
"SB1" 823+00 TO 828+45	0.0	0.0	0.2	0.2	0.2	331	420	157	1.5
"SB1" 828+45 TO 830+50	0.4	0.0	0.2	0.2	0.3	205	390	233	1.0
"SB1" 830+50 TO 834+50	0.4	0.2	0.2	0.2	0.4	267	520	333	1.4
"SB1" 834+50 TO 837+00	0.2	0.2	0.2	0.2	0.4	152	253	178	0.8
"SB1" 837+00 TO 839+85	0.2	0.0	0.2	0.2	0.2	173	266	82	0.8
"SB1" 845+80 TO 851+00	0.2	0.2	0.2	0.2	0.3	315	525	300	1.6
"SB1" 851+00 TO 894+00	0.4	0.2	0.2	0.2	0.2	3195	6251	2048	16.9
"SB1" 894+00 TO 902+00	0.6	0.2	0.2	0.2	0.4	633	1373	804	3.5
"SB1" 902+00 TO 906+00	0.4	0.0	0.2	0.2	0.3	353	666	339	1.8
"SB1" 906+00 TO 911+00	0.4	0.0	0.2	0.2	0.3	521	995	543	2.6
"SB1" 911+00 TO 918+60	0.6	0.0	0.2	0.2	0.3	598	1233	610	3.2
"SB1" 924+15 TO 932+25	0.2	0.2	0.2	0.2	0.3	645	1135	657	3.2
"SB1" 932+25 TO 956+50	0.4	0.2	0.2	0.2	0.2	2408	4777	1472	13.0
"SB1" 956+50 TO 960+50	0.6	0.2	0.2	0.2	0.4	317	686	427	1.8
"SB1" 960+50 TO 963+00	0.4	0.2	0.2	0.2	0.2	197	386	129	1.0
"SB1" 963+00 TO 972+00	0.2	0.2	0.2	0.2	0.2	712	1250	515	3.6
"SB1" 972+00 TO 986+75	0.4	0.2	0.2	0.2	0.2	1374	2694	759	7.4
"SB1" 993+00 TO 1003+80	0.4	0.2	0.2	0.2	0.2	807	1579	582	4.3
SUBTOTAL						29,433	48,378	22,249	143.4

HOT MIX ASPHALT QUANTITIES (CONTINUED)

STATION	(N) HMA DEPTH (OUTSIDE SHOULDER)	(N) HMA DEPTH (MEDIAN SHOULDER)	(N) RHMA (GAP GRADED) DEPTH (OUTSIDE SHOULDER)	(N) RHMA (GAP GRADED) DEPTH (MEDIAN SHOULDER)	(N) HOT MIX ASPHALT (GEOMETRIC) AVERAGE DEPTH	RUBBERIZED HOT MIX ASPHALT (GAP GRADED)	HOT MIX ASPHALT (TYPE A)	HOT MIX ASPHALT (GEOMETRIC)	TACK COAT
	FT	FT	FT	FT	FT	TON	TON	TON	TON
SUBTOTAL						29,433	48,378	22,249	143.4
"NB1" 846+30 TO 850+00	0.6	0.2	0.2	0.2	0.2	292	632	191	1.6
"NB1" 850+00 TO 858+00	0.4	0.2	0.2	0.2	0.2	562	1097	386	3.0
"NB1" 858+00 TO 879+50	0.2	0.2	0.2	0.2	0.2	1301	2169	620	6.5
"NB1" 879+50 TO 892+50	0.4	0.2	0.2	0.2	0.2	786	1519	474	4.2
"NB1" 892+50 TO 904+50	0.2	0.2	0.2	0.2	0.1	732	1219	324	3.6
"NB1" 904+50 TO 908+04	0.4	0.2	0.2	0.2	0.2	312	617	221	1.6
"NB1" 908+04 TO 915+00	0.2	0.2	0.2	0.2	0.2	423	705	228	2.1
"NB1" 915+00 TO 918+80	0.6	0.2	0.2	0.2	0.5	230	505	343	1.3
"NB1" 924+40 TO 931+14	0.2	0.2	0.2	0.2	0.3	405	676	322	2.0
"NB1" 931+14 TO 938+50	0.4	0.2	0.2	0.2	0.2	598	1177	500	3.1
"NB1" 938+50 TO 954+00	0.2	0.2	0.2	0.2	0.2	957	1584	447	4.7
"NB1" 954+00 TO 956+50	0.4	0.2	0.2	0.2	0.3	150	290	134	0.8
"NB1" 956+50 TO 960+00	0.8	0.2	0.2	0.2	0.6	212	521	403	1.3
"NB1" 960+00 TO 985+70	0.2	0.2	0.2	0.2	0.2	1562	2604	1140	7.8
"NB1" 993+10 TO 1000+00	0.4	0.2	0.2	0.2	0.3	513	1003	603	2.7
"NB1" 1000+00 TO 1003+50	0.6	0.2	0.2	0.2	0.5	212	466	316	1.2
"NB1" 1003+50 TO 1003+80	0.4	0.2	0.2	0.2	0.4	18	35	22	0.1
FROM STAGE CONSTRUCTION & TRAFFIC HANDLING QUANTITIES (SCQ-3)							4257		11.3
FROM HMA (Misc AREA) & DIKES QUANTITIES (Q-1)							5143		0.3
FROM RAMP QUANTITIES (Q-3)						3423	3863		16.5
FROM GUARDRAIL QUANTITIES (Q-4)							324		0.8
FROM PROFILE SMOOTHING QUANTITIES (Q-5)							141		0.3
TOTAL						42,121	78,925	28,923	220.0

SUMMARY OF QUANTITIES

Q-2

REVISED BY | DATE REVISED
RUSSELL FLOOD | GINNY SEIBERT
CALCULATED-DESIGNED BY | CHECKED BY
FUNCTIONAL SUPERVISOR | STEVE TOPAL

STATE OF CALIFORNIA - DEPARTMENT OF TRANSPORTATION
Caltrans DESIGN

P:\proj1\02\4G820_plans\pse\24g820pa002.dgn

LAST REVISION 05-20-15 | DATE PLOTTED => 26-JUN-2015 | TIME PLOTTED => 09:51

Dist	COUNTY	ROUTE	POST MILES TOTAL PROJECT	SHEET No.	TOTAL SHEETS
02	Sis	5	R10.7/R19.5	241	327

Russell Flood 06-23-15
REGISTERED CIVIL ENGINEER DATE

06-23-15
PLANS APPROVAL DATE

REGISTERED PROFESSIONAL ENGINEER RUSSELL P. FLOOD No. C72261 Exp. 6-30-16 CIVIL STATE OF CALIFORNIA

THE STATE OF CALIFORNIA OR ITS OFFICERS OR AGENTS SHALL NOT BE RESPONSIBLE FOR THE ACCURACY OR COMPLETENESS OF SCANNED COPIES OF THIS PLAN SHEET.

NOTES:

1. (N) - NOT A SEPARATE PAY ITEM, FOR INFORMATION ONLY.

RAMP QUANTITIES

INTERCHANGE	STATION	NORTHBOUND	SOUTHBOUND	ENTRANCE	EXIT	*** COLD PLANE ASPHALT CONCRETE PAVEMENT	*** SHOULDER BACKING	ROADWAY EXCAVATION	* REMOVE ASPHALT CONCRETE PAVEMENT	CLASS 2 AGGREGATE BASE (CY)	LEAN CONCRETE BASE	(N) HMA (TYPE A) DEPTH	** HOT MIX ASPHALT (TYPE A)	(N) RHMA (GAP GRADED) DEPTH	** RUBBERIZED HOT MIX ASPHALT (GAP GRADED)	** TACK COAT	* PLACE HOT MIX ASPHALT DIKE (TYPE A)	* PLACE HOT MIX ASPHALT (MISCELLANEOUS AREA)	JOINTED PLAIN CONCRETE PAVEMENT	MINOR CONCRETE (TEXTURED PAVING)
						SQYD	TON	CY	SQFT	CY	CY	FT	TON	FT	TON	TON	LF	SQYD	CY	CY
N MT SHASTA	"NMS1" 47+00 TO 51+50		X		X		21	725		347		0.30	250	0.2	161	1.2				26
ABRAMS LAKE	"AL1" 86+68 TO 95+00		X	X		2212	127	60		30		0.2	319	0.2	309	1.5				30
	"AL1" 95+00 TO 97+97		X	X		1010	49							0.2	141	0.5				
	"AL2" 97+73 TO 101+50		X		X	942	61							0.2	131	0.4				
	"AL2" 101+50 TO 108+56		X		X	1810	102	87		44		0.2	261	0.2	252	1.2				44
TRUCK VILLAGE	"TV1" 104+73 TO 111+18		X	X		1941	52	57	3435	29		0.2	417	0.2	271	1.3		382		29
	"TV2" 111+37 TO 125+00		X		X	3416	222							0.2	477	1.6				
	"TV2" 125+00 TO 128+42		X		X	870	43	88		44		0.2	125	0.2	121	0.6				44
SOUTH WEED	"SW1" 10+70 TO 14+50		X	X		950	52	56		28		0.6	410	0.2	132	1.0				28
	"SW1" 14+50 TO 15+50		X	X		294	8		1045			0.4	126	0.2	41	0.3		116		
	"SW1" 15+50 TO 17+69		X	X		691	18		2185				87	0.2	96	0.3		243		
	"SW2" 20+68 TO 24+28		X		X		58	539			180								359	
	"SW2" 24+28 TO 27+50		X		X	839	43							0.2	117	0.4				
	"SW2" 27+50 TO 32+19		X		X	1211	65	78		39		0.2	174	0.2	169	0.8				39
	"SW3" 8+08 TO 9+61	X			X	409	12	88		44		0.4	118	0.2	57	0.4				44
	"SW3" 9+61 TO 18+22	X			X	2452	85		4846				194	0.2	342	1.1		538		
	"SW4" 22+13 TO 25+69	X		X			61	746			249								497	
	"SW4" 25+69 TO 29+50	X		X		1075	103					0.4	310	0.2	150	0.9				
	"SW4" 29+50 TO 31+19	X		X		443	19	56		28		0.4	128	0.2	62	0.4				28
CENTRAL WEED	"CW1" 97+71 TO 98+77		X	X		305	8	59		29				0.2	43	0.1				29
	"CW2" 98+96 TO 102+00	X			X	1164	17	51		25		0.4	346	0.2	162	1.0	353			25
	"CW2" 102+00 TO 103+00	X			X	292	16					0.6	126	0.2	41	0.3				
	"CW2" 103+00 TO 105+00	X			X	723	33					0.8	416	0.2	101	0.9				
	"CW2" 105+00 TO 105+50	X			X	195	8					0.4	56	0.2	27	0.2				
	"CW2" 105+50 TO 105+85	X			X	142	6							0.2	20	0.1				
FROM STAGE CONSTRUCTION & TRAFFIC HANDLING (SCQ-3)								3453		3943										
FROM UTILITY WALKWAY PAD QUANTITIES (Q-5)										24										
FROM CONFORM QUANTITIES (Q-5)								11,028		10,875	199								398	
FROM GUARDRAIL QUANTITIES (Q-4)										38										
TOTAL						23,386	1289	17,171	11,511	15,564	628		3863		3423	16.5	353	1279	1252	366

* INCLUDED IN HMA (Misc AREA) & DIKE QUANTITIES TABLE (Q-1)
** INCLUDED IN HOT MIX ASPHALT QUANTITIES TABLE (Q-2)
*** INCLUDED IN ROADWAY QUANTITIES TABLE (Q-1)

SUMMARY OF QUANTITIES
Q-3

REVISED BY | DATE REVISED
RUSSELL FLOOD | GINNY SEIBERT
CALCULATED-DESIGNED BY | CHECKED BY
FUNCTIONAL SUPERVISOR: STEVE TOPAL
STATE OF CALIFORNIA - DEPARTMENT OF TRANSPORTATION
Caltrans® DESIGN
P:\proj1\02\40820_plans\pse\24g820pa003.dgn

LAST REVISION 05-15-15 | DATE PLOTTED => 26-JUN-2015 | TIME PLOTTED => 09:51

Dist	COUNTY	ROUTE	POST MILES TOTAL PROJECT	SHEET No.	TOTAL SHEETS
02	Sis	5	R10.7/R19.5	242	327

Russell Flood 06-23-15
REGISTERED CIVIL ENGINEER DATE

06-23-15
PLANS APPROVAL DATE

REGISTERED PROFESSIONAL ENGINEER RUSSELL P. FLOOD No. C72261 Exp. 6-30-16 CIVIL STATE OF CALIFORNIA

THE STATE OF CALIFORNIA OR ITS OFFICERS OR AGENTS SHALL NOT BE RESPONSIBLE FOR THE ACCURACY OR COMPLETENESS OF SCANNED COPIES OF THIS PLAN SHEET.

NOTES:

1. (N) - NOT A SEPARATE PAY ITEM, FOR INFORMATION ONLY.
2. SHEET No. L-X CORRESPONDS TO BEGIN STATION OF MBGR RUN ON LAYOUT SHEETS.

GUARDRAIL QUANTITIES

LAYOUT SHEET No.	DIRECTION	ALIGNMENT	STATION RANGE	L+	R+	Exist LENGTH (N)	TREATED WOOD WASTE	REMOVE GUARDRAIL	* REMOVE ASPHALT CONCRETE PAVEMENT	REMOVE VEGETATION CONTROL (MINOR CONCRETE)	RECONSTRUCT CRASH CUSHION (TYPE CAT)	RECONSTRUCT GUARDRAIL (STEEL POST)	RECONSTRUCT GUARDRAIL (STEEL POST) (DOUBLE)	RECONSTRUCT TERMINAL SYSTEM	RECONSTRUCT TRANSITION RAILING (TYPE WB)	RECONSTRUCT END ANCHOR ASSEMBLY (TYPE SFT)	*** COLD PLANE ASPHALT CONCRETE PAVEMENT	**** CLASS 2 AGGREGATE BASE (CY)	** HOT MIX ASPHALT (TYPE A)	** TACK COAT	MINOR CONCRETE (MINOR STRUCTURE)	VEGETATION CONTROL (MINOR CONCRETE)	METAL BEAM GUARD RAILING (STEEL POST)	ALTERNATIVE FLARED TERMINAL SYSTEM	RAIL TENSIONING ASSEMBLY	LAYOUT
L-X						LF	LB	LF	SQFT	SQYD	EA	LF	LF	EA	EA	EA	SQYD	CY	TON	TON	CY	SQYD	LF	EA	EA	
2			635+06.0 TO 639+15.8		X	368.8	5062.7		243.0	211.1	1	312.5	37.5			1						263.3			1	14A
2			637+57.3 TO 638+66.6	X		108.5	2749.6			65.5		87.5			1							65.5				12D
2			639+17.2 TO 640+63.5	X		62.5	2308.4	25.0		18.7					1							87.6	62.5	1		12B
3			674+67.1 TO 683+48.3	X		862.5	11,442.5			369.8		825.0		1		1						389.8				11B
8			812+07.5 TO 815+18.8		X	268.8	5340.5			456.4	1	25.0	200.0		1							416.8			1	12E
8	SB	SB1	812+09.4 TO 813+54.3	X		62.5	2308.4			53.5				1	1							87.6	62.5			12B
9			841+05.5 TO 841+67.5	X		62.5	905.5					62.5				1						31.3				12DD
9			843+96.7 TO 845+40.5	X		62.5	2308.4							1	1							102.3	100.0			12B
9			844+08.5 TO 848+32.9		X	393.8	3529.5			255.1	1	25.0	312.5		1		424.5	4.8	71.5	0.2		255.1			1	12E
14			921+97.6 TO 926+46.9		X	406.3	3749.0			209.1	1	25.0	325.0		1		672.3	12.3	123.3	0.3	1.50	209.1			1	12E
14			921+96.8 TO 923+39.5	X		62.5	2308.4							1	1						1.50	108.3	100.0			12B
17			990+56.9 TO 992+61.7		X	181.3	2761.2		831.5		1	25.0	100.0		1						1.50	197.5			1	12E
17			991+01.7 TO 992+45.9	X		62.5	2308.4							1	1						1.50	89.2	62.5			12B
13			902+92.5 TO 904+27.0		X	112.5	905.5		546.7			75.0		1		1						122.2				16B
14			916+53.0 TO 920+70.0	X		406.3	3749.0			247.7	1	25.0	325.0		1		437.0	8.7	81.6	0.2	1.50	247.7			1	12E
14			919+53.7 TO 921+00.0		X	62.5	2308.4							1	1						1.50	107.5	100.0			12B
17	NB	NB1	986+11.8 TO 988+18.4	X		181.3	2761.2		690.1	111.8	1	25.0			1						1.50	207.4	100.0		1	12E
17			986+27.2 TO 987+70.6		X	112.5	3049.3					50.0		1	1						1.50	91.7	12.5			12B
18			993+86.1 TO 995+25.3		X	112.5	905.5	112.5	1485.9																	
18			1002+89.9 TO 1005+88.1	X		231.3	2980.7			196.6	1	25.0	187.5		1		156.2	11.8	48.0	0.1	1.50	196.6			1	12E
18			1004+67.7 TO 1006+10.2		X	62.5	2308.4							1	1						1.50	106.4	62.5			12B
FROM DRAINAGE QUANTITIES TABLE (SHEET DQ-1)																					7.17	51.5				
SUB TOTAL												1587.5	1487.5													
TOTAL						4246.4	66,050.5	137.5	3797.2	2195.3	8	3075.0		9	16	4	1690.0	37.6	324.4	0.8	22.17	3434.4	662.5	1	8	

* INCLUDED IN HMA (Misc AREA) & DIKE QUANTITIES TABLE (Q-1)
** INCLUDED IN HOT MIX ASPHALT QUANTITIES TABLE (Q-2)
*** INCLUDED IN ROADWAY QUANTITIES TABLE
**** INCLUDED IN RAMP QUANTITIES TABLE (Q-3)

SUMMARY OF QUANTITIES

Q-4

REVISED BY | DATE REVISED
RUSSELL FLOOD | GINNY SEIBERT
CALCULATED-DESIGNED BY | CHECKED BY
FUNCTIONAL SUPERVISOR
STEVE TOPAL

STATE OF CALIFORNIA - DEPARTMENT OF TRANSPORTATION
Caltrans
DESIGN

P:\proj1\02\40820_plans\pse\24g820pa004.dgn

LAST REVISION | DATE PLOTTED => 26-JUN-2015
05-20-15 | TIME PLOTTED => 09:51

Dist	COUNTY	ROUTE	POST MILES TOTAL PROJECT	SHEET No.	TOTAL SHEETS
02	Sis	5	R10.7/R19.5	243	327

Russell Flood 06-23-15
REGISTERED CIVIL ENGINEER DATE

06-23-15
PLANS APPROVAL DATE

REGISTERED PROFESSIONAL ENGINEER
RUSSELL P. FLOOD
No. C72261
Exp. 6-30-16
CIVIL
STATE OF CALIFORNIA

THE STATE OF CALIFORNIA OR ITS OFFICERS OR AGENTS SHALL NOT BE RESPONSIBLE FOR THE ACCURACY OR COMPLETENESS OF SCANNED COPIES OF THIS PLAN SHEET.

WATER POLLUTION CONTROL

	TEMPORARY FIBER ROLL	TEMPORARY DRAINAGE INLET PROTECTION	TEMPORARY HYDRAULIC MULCH (BONDED FIBER MATRIX)	TEMPORARY FENCE (TYPE ESA)
	LF	EA	SQYD	LF
TOTAL	4320	40	11,000	120

UTILITY WALKWAY PAD QUANTITIES

STATION	OFFSET	(N) AREA	**** CLASS 2 AGGREGATE BASE (CY)	MINOR CONCRETE (MISCELLANEOUS CONSTRUCTION)	4' CHAIN LINK GATE (TYPE CL-6, EXTENSION ARM)	CHAIN LINK FENCE (TYPE CL-6)	DESCRIPTION
		SQFT	CY	CY	EA	LF	
"SB1" 696+00	552' Rt	189	3.5	3.50			Abrams Lake CCTV
"SB1" 697+61	101' Rt	252	4.7	4.67			Abrams Lake OC
"SB1" 698+24	240' Lt	378	7.0	7.00			Abrams Lake HAR
"SB1" 698+35	81' Lt	21	0.4	0.39			Abrams Lake CMS
"SB1" 744+21	201' Lt	72	1.3	1.33			Black Butte Utility Walkway
"SB1" 744+80	101' Lt	357	6.6	6.61	1	48	Black Butte RWIS
TOTAL			23.5	23.50	1	48	

**** INCLUDED IN RAMP QUANTITIES TABLE (Q-3)

CONFORM QUANTITIES

STATION	LAYOUT SHEET	NORTHBOUND	SOUTHBOUND	*** ROADWAY EXCAVATION	*** CLASS 2 AGGREGATE BASE	*** LEAN CONCRETE BASE	*** JOINTED PLAIN CONCRETE PAVEMENT	STRUCTURAL Conc APPROACH SLAB (TYPE R)	JOINT SEAL (MR 1")	DESCRIPTION
				CY	CY	CY	CY	CY	LF	
"SB1" 808+65 TO 810+65	L-8		X	649	433					DEETZ ROAD UC
"SB1" 812+24 TO 814+24	L-8		X	650	434					DEETZ ROAD UC
"SB1" 839+86 TO 841+86	L-9		X	649	433					BLACK BUTTE OH
"SB1" 843+80 TO 845+80	L-9		X	648	432					BLACK BUTTE OH
"NB1" 844+32 TO 846+32	L-9	X		908	605					BLACK BUTTE OH
"SB1" 918+58 TO 920+58	L-14		X	850	567					SOUTH WEED UC
"NB1" 918+81 TO 920+81	L-14	X		651	868					SOUTH WEED UC
"SB1" 922+14 TO 924+14	L-14		X	850	1134					SOUTH WEED UC
"NB1" 922+42 TO 924+42	L-14	X		650	866					SOUTH WEED UC
"NB1" 985+87 TO 988+35	L-17	X		645	860			44	58	SISKIYOU WAY UC
"SB1" 986+85 TO 988+85	L-17		X	1031	1374					SISKIYOU WAY UC
"SB1" 990+87 TO 992+87	L-17		X	836	1115					SISKIYOU WAY UC
"NB1" 989+79 TO 992+75	L-17	X		696		199	398	44	52	SISKIYOU WAY UC
"SB1" 1003+75 TO 1005+75	L-18		X	657	876					ROUTE 5/97 Sep
"NB1" 1003+86 TO 1005+86	L-18	X		658	878					ROUTE 5/97 Sep
TOTAL				11,028	10,875	199	398	88	110	

* INCLUDED IN ROADWAY QUANTITIES (Q-1) & HMA QUANTITIES (Q-2)
** HMA AND TACK COAT QUANTITIES INCLUDED IN HMA QUANTITIES (Q-2)
*** INCLUDED IN RAMP QUANTITIES (Q-3)

PROFILE SMOOTHING QUANTITIES

STATION	SHEET	** COLD PLANE ASPHALT CONCRETE PAVEMENT	* HOT MIX ASPHALT (TYPE A)	* TACK COAT	GRIND EXISTING BRIDGE DECK	DESCRIPTION
		SQYD	TON	TON	SQYD	
"SB1" 841+48 TO 844+31	C-2	800	141	0.3	818	BLACK BUTTE OH

* INCLUDED IN HOT MIX ASPHALT QUANTITIES TABLE (Q-2)
** INCLUDED IN ROADWAY QUANTITIES TABLE (Q-1)

SUMMARY OF QUANTITIES

Q-5

REVISED BY	DATE REVISED	FUNCTIONAL SUPERVISOR	CALCULATED-DESIGNED BY	CHECKED BY
RUSSELL FLOOD	GINNY SEIBERT	STEVE TOPAL		

STATE OF CALIFORNIA - DEPARTMENT OF TRANSPORTATION
Caltrans DESIGN

P:\proj1\02\40820_plans\pse\24g820pa005.dgn

LAST REVISION 05-14-15 | DATE PLOTTED => 26-JUN-2015 | TIME PLOTTED => 09:51

Dist	COUNTY	ROUTE	POST MILES TOTAL PROJECT	SHEET No.	TOTAL SHEETS
02	Sis	5	R10.7/R19.5	244	327

REGISTERED ELECTRICAL ENGINEER 06-23-15 DATE

PLANS APPROVAL DATE 06-23-15

REGISTERED PROFESSIONAL ENGINEER THERESA ANDERSON No. C77957 Exp. 6-30-17 CIVIL STATE OF CALIFORNIA

THE STATE OF CALIFORNIA OR ITS OFFICERS OR AGENTS SHALL NOT BE RESPONSIBLE FOR THE ACCURACY OR COMPLETENESS OF SCANNED COPIES OF THIS PLAN SHEET.

NOTE:

1. FOR ACCURATE RIGHT OF WAY AND ACCESS DATA, CONTACT RIGHT OF WAY ENGINEERING AT THE DISTRICT OFFICE.

LEGEND:

- Exist ELECTROLIER WITH HPS Lum
- (PB) OBJECT MARKER (TYPE PB) AND PULL BOX PAVING.
- Exist RWIS TOWER

ABBREVIATIONS:

6SMFO	6-STRAND SINGLE MODE FIBER OPTIC
CAB	CABINET
CAT5E	CATEGORY 5E ETHERNET CABLE
DFCCTV	DEPARTMENT FURNISHED CCTV CAMERA CABLE
FOHDPE	FIBER OPTIC HDPE CONDUIT
ITS	INTELLIGENT TRANSPORTATION SYSTEM
MSC	MANUFACTURER SUPPLIED CABLE
NID	NETWORK INTERFACE DEVICE
SLI	SENSOR LEAD-IN CABLE
TC	TELEPHONE CABLE
TCS	TRAFFIC COUNT STATION

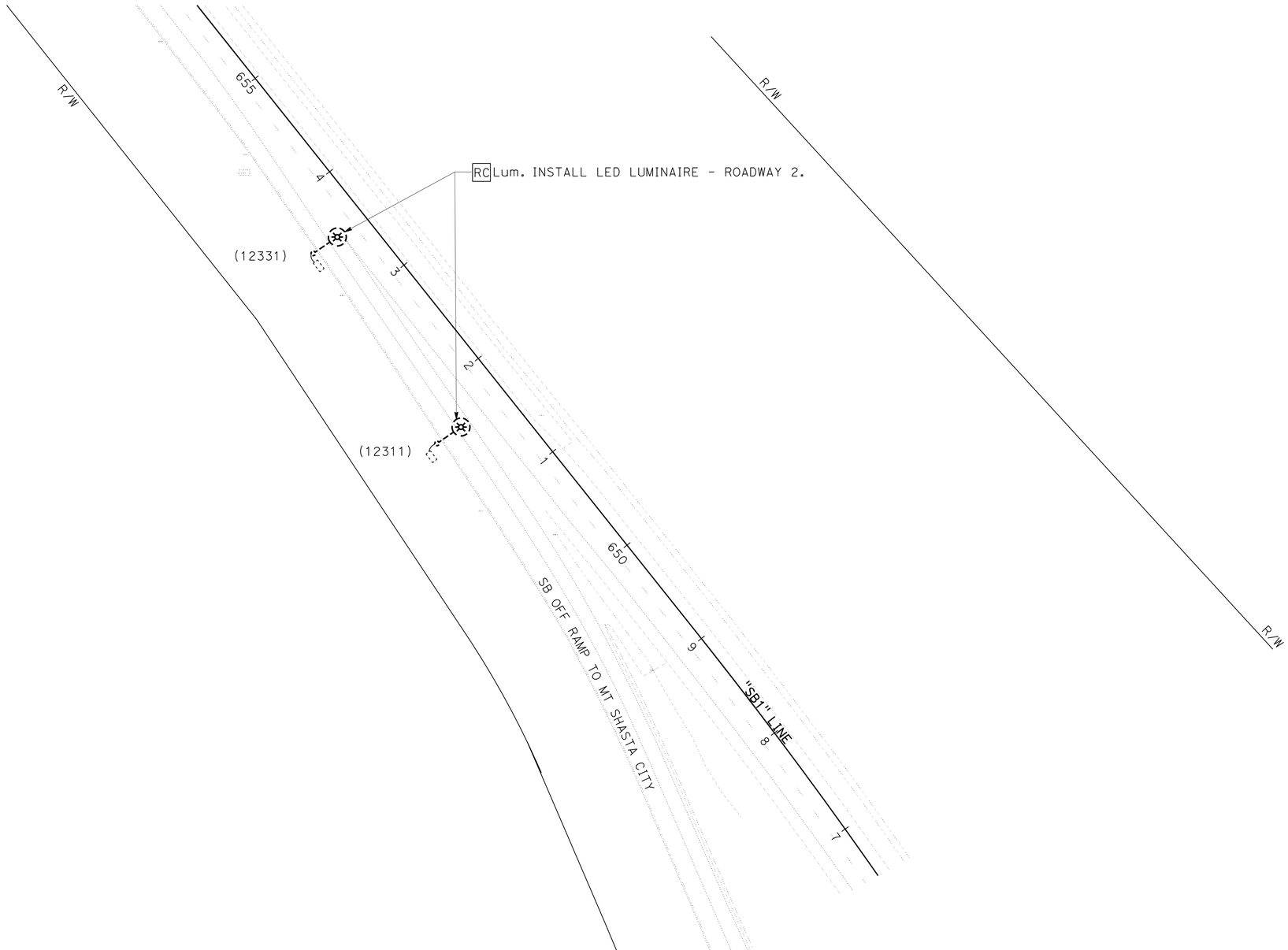

MODIFY LIGHTING

SCALE: 1" = 50'

E-1

APPROVED FOR ELECTRICAL WORK ONLY

REVISED BY	DATE REVISED
TERI ANDERSON	ARTURO ROBLES
CALCULATED-DESIGNED BY	CHECKED BY
FUNCTIONAL SUPERVISOR	ROB STINGER

STATE OF CALIFORNIA - DEPARTMENT OF TRANSPORTATION

Caltrans® ELECTRICAL DESIGN

P:\proj1\02\40820_plans\pse\24g820ua001.dgn

LAST REVISION 06-23-15 | DATE PLOTTED => 26-JUN-2015 TIME PLOTTED => 09:51

Dist	COUNTY	ROUTE	POST MILES TOTAL PROJECT	SHEET No.	TOTAL SHEETS
02	Sis	5	R10.7/R19.5	245	327

06-23-15
REGISTERED ELECTRICAL ENGINEER DATE

06-23-15
PLANS APPROVAL DATE

REGISTERED PROFESSIONAL ENGINEER
THERESA ANDERSON
No. C77957
Exp. 6-30-17
CIVIL
STATE OF CALIFORNIA

THE STATE OF CALIFORNIA OR ITS OFFICERS OR AGENTS SHALL NOT BE RESPONSIBLE FOR THE ACCURACY OR COMPLETENESS OF SCANNED COPIES OF THIS PLAN SHEET.

NOTE:

1. FOR ACCURATE RIGHT OF WAY AND ACCESS DATA, CONTACT RIGHT OF WAY ENGINEERING AT THE DISTRICT OFFICE.

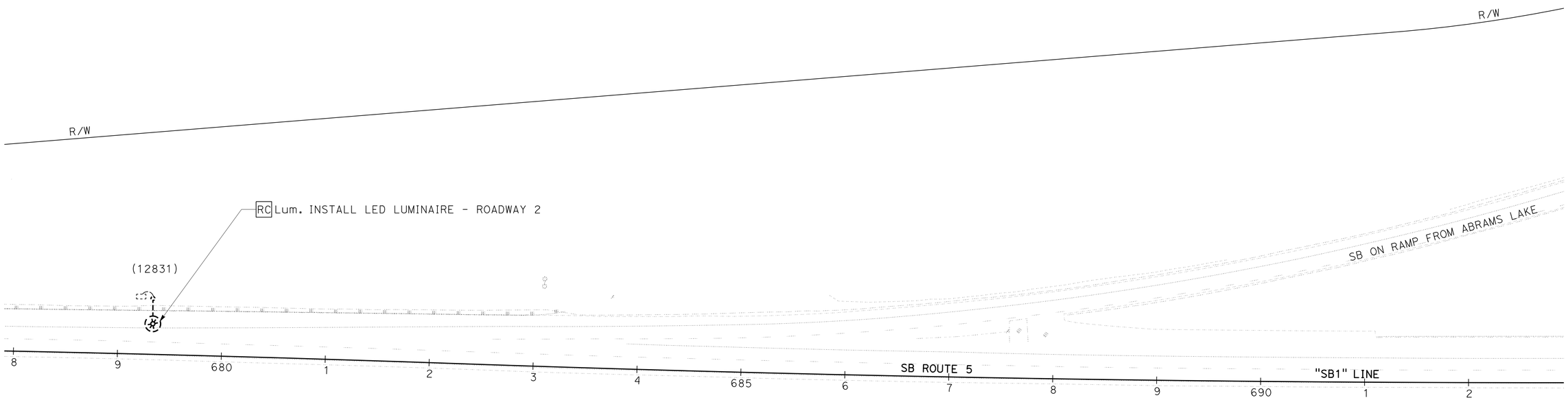

MODIFY LIGHTING

SCALE: 1" = 50'

E-2

APPROVED FOR ELECTRICAL WORK ONLY

REVISED BY | DATE REVISED

TERI ANDERSON | ARTURO ROBLES

CALCULATED-DESIGNED BY | CHECKED BY

FUNCTIONAL SUPERVISOR: ROB STINGER

STATE OF CALIFORNIA - DEPARTMENT OF TRANSPORTATION

Caltrans® ELECTRICAL DESIGN

P:\proj1\02\4G820_plans\pse\24g820ua002.dgn

LAST REVISION 06-23-15 | DATE PLOTTED => 26-JUN-2015 | TIME PLOTTED => 09:51

Dist	COUNTY	ROUTE	POST MILES TOTAL PROJECT	SHEET No.	TOTAL SHEETS
02	Sis	5	R10.7/R19.5	246	327

REGISTERED ELECTRICAL ENGINEER 06-23-15 DATE

PLANS APPROVAL DATE 06-23-15

REGISTERED PROFESSIONAL ENGINEER THERESA ANDERSON No. C77957 Exp. 6-30-17 CIVIL STATE OF CALIFORNIA

THE STATE OF CALIFORNIA OR ITS OFFICERS OR AGENTS SHALL NOT BE RESPONSIBLE FOR THE ACCURACY OR COMPLETENESS OF SCANNED COPIES OF THIS PLAN SHEET.

NOTE:

1. FOR ACCURATE RIGHT OF WAY AND ACCESS DATA, CONTACT RIGHT OF WAY ENGINEERING AT THE DISTRICT OFFICE.

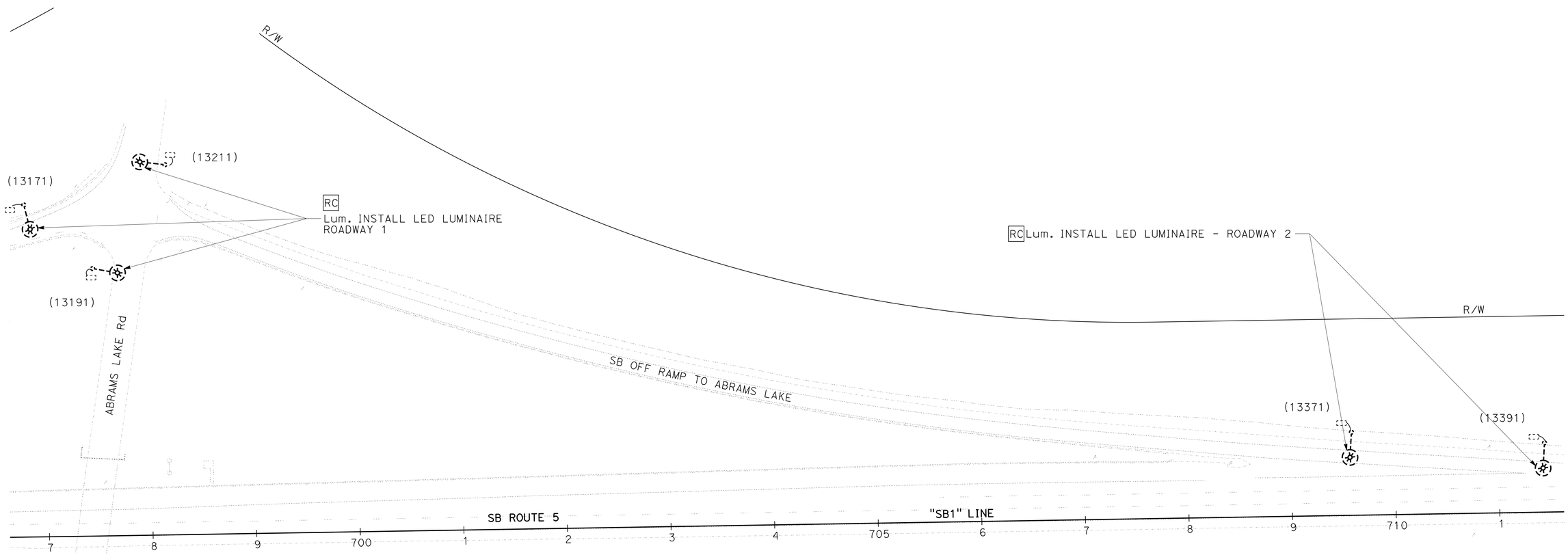

MODIFY LIGHTING

SCALE: 1" = 50'

E-3

APPROVED FOR ELECTRICAL WORK ONLY

STATE OF CALIFORNIA - DEPARTMENT OF TRANSPORTATION

Caltrans® **ELECTRICAL DESIGN**

FUNCTIONAL SUPERVISOR: ROB STINGER

CALCULATED-DESIGNED BY: TERI ANDERSON

CHECKED BY: ARTURO ROBLES

REVISED BY

DATE REVISED

P:\proj1\02\46820_plans\pse\24g820ua003.dgn

LAST REVISION 06-23-15

DATE PLOTTED => 26-JUN-2015

TIME PLOTTED => 09:51

Dist	COUNTY	ROUTE	POST MILES TOTAL PROJECT	SHEET No.	TOTAL SHEETS
02	Sis	5	R10.7/R19.5	247	327

REGISTERED ELECTRICAL ENGINEER 06-23-15 DATE

PLANS APPROVAL DATE 06-23-15

REGISTERED PROFESSIONAL ENGINEER THERESA ANDERSON No. C77957 Exp. 6-30-17 CIVIL STATE OF CALIFORNIA

THE STATE OF CALIFORNIA OR ITS OFFICERS OR AGENTS SHALL NOT BE RESPONSIBLE FOR THE ACCURACY OR COMPLETENESS OF SCANNED COPIES OF THIS PLAN SHEET.

NOTE:

1. FOR ACCURATE RIGHT OF WAY AND ACCESS DATA, CONTACT RIGHT OF WAY ENGINEERING AT THE DISTRICT OFFICE.

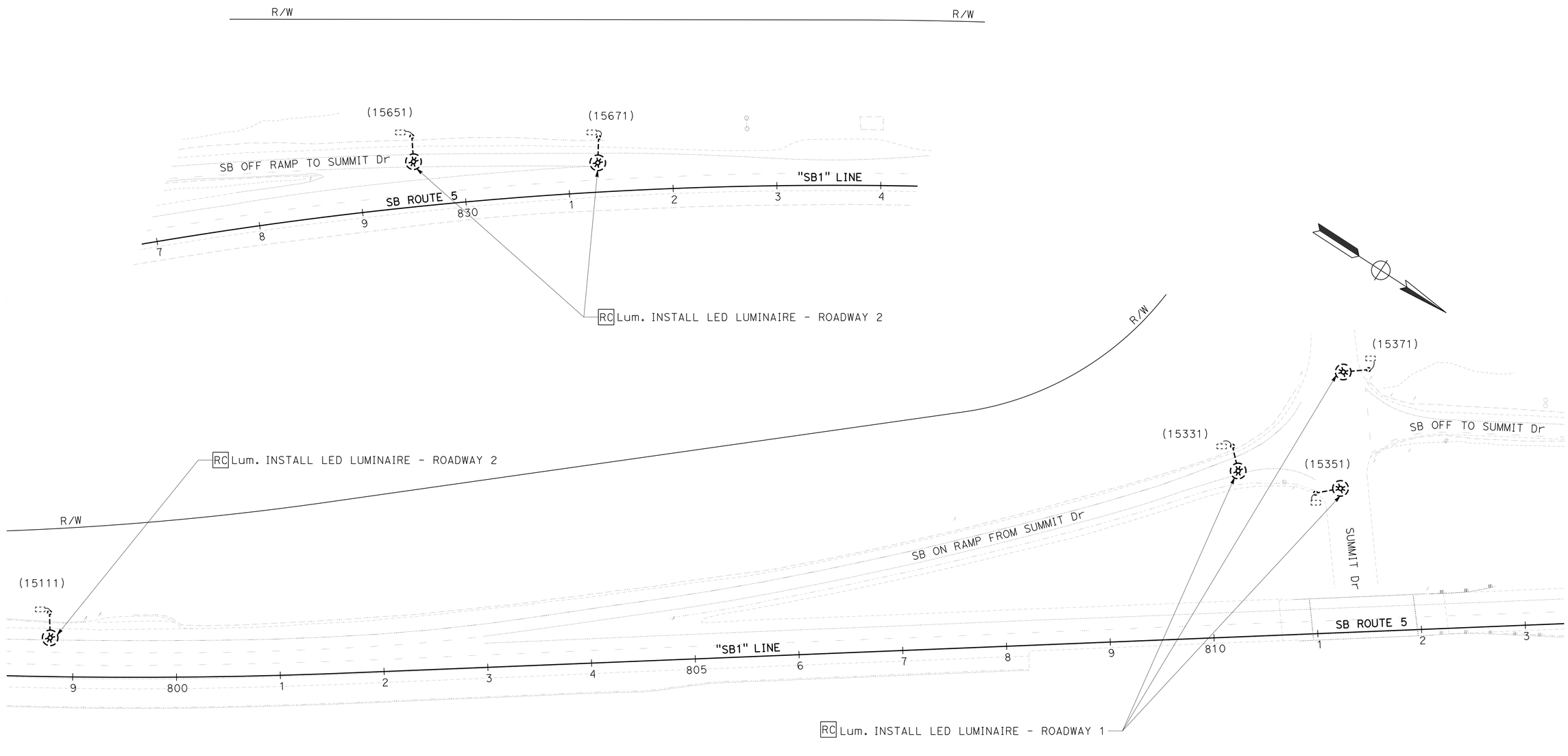

MODIFY LIGHTING

SCALE: 1" = 50'

E-4

APPROVED FOR ELECTRICAL WORK ONLY

STATE OF CALIFORNIA - DEPARTMENT OF TRANSPORTATION

Caltrans® ELECTRICAL DESIGN

FUNCTIONAL SUPERVISOR: ROB STINGER

CALCULATED-DESIGNED BY: TERI ANDERSON

CHECKED BY: ARTURO ROBLES

REVISED BY / DATE REVISED

P:\proj1\02\4G820_plans\pse\24g820ua004.dgn

LAST REVISION 06-23-15 | DATE PLOTTED => 26-JUN-2015 | TIME PLOTTED => 09:51

Dist	COUNTY	ROUTE	POST MILES TOTAL PROJECT	SHEET No.	TOTAL SHEETS
02	Sis	5	R10.7/R19.5	248	327

REGISTERED ELECTRICAL ENGINEER 06-23-15 DATE

PLANS APPROVAL DATE 06-23-15

REGISTERED PROFESSIONAL ENGINEER THERESA ANDERSON No. C77957 Exp. 6-30-17 CIVIL STATE OF CALIFORNIA

THE STATE OF CALIFORNIA OR ITS OFFICERS OR AGENTS SHALL NOT BE RESPONSIBLE FOR THE ACCURACY OR COMPLETENESS OF SCANNED COPIES OF THIS PLAN SHEET.

NOTE:

1. FOR ACCURATE RIGHT OF WAY AND ACCESS DATA, CONTACT RIGHT OF WAY ENGINEERING AT THE DISTRICT OFFICE.

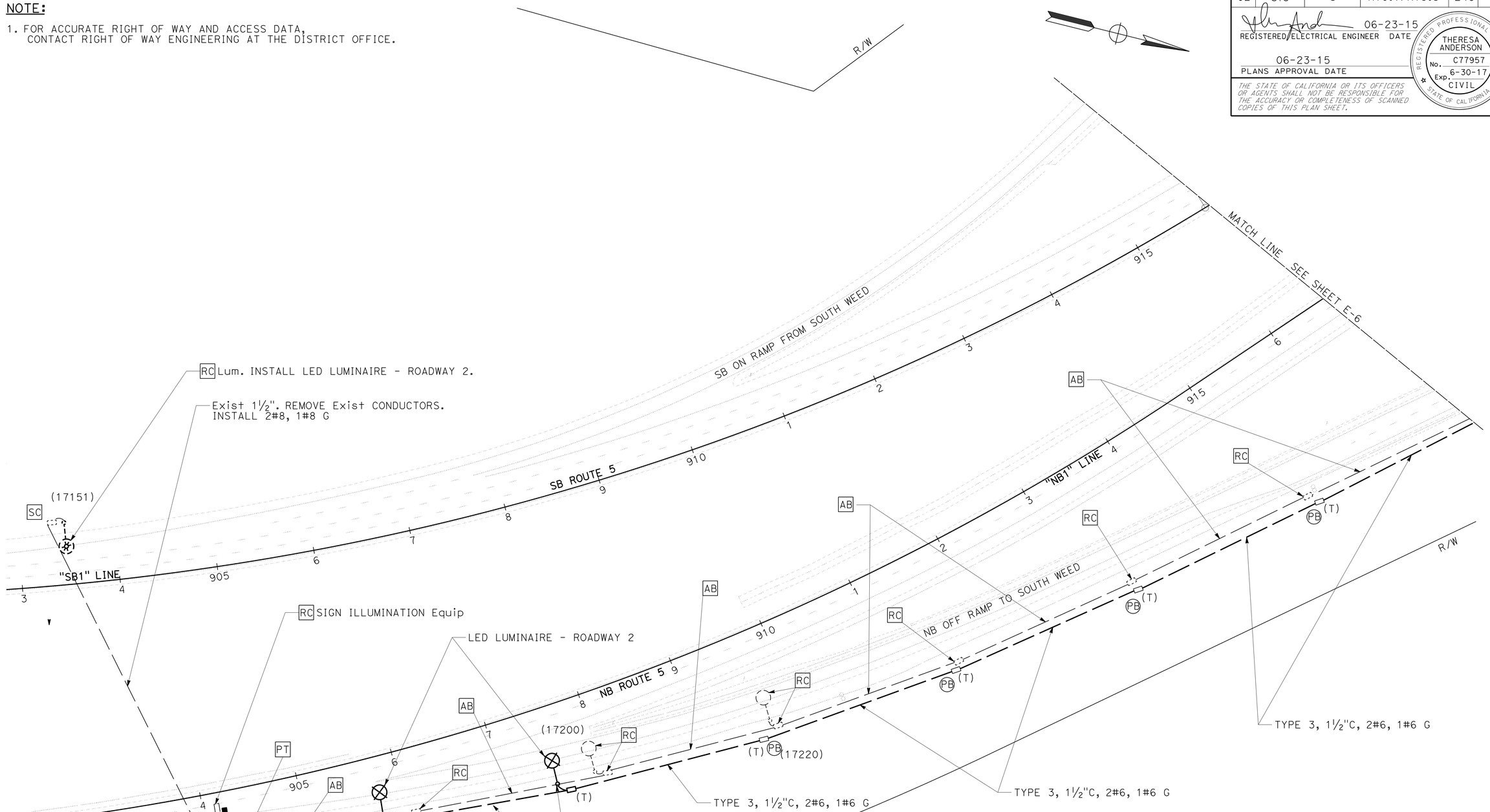

MODIFY LIGHTING

SCALE: 1" = 50'

E-5

APPROVED FOR ELECTRICAL WORK ONLY

STATE OF CALIFORNIA - DEPARTMENT OF TRANSPORTATION

Caltrans® ELECTRICAL DESIGN

FUNCTIONAL SUPERVISOR: ROB STINGER

CALCULATED-DESIGNED BY: TERI ANDERSON

CHECKED BY: ARTURO ROBLES

REVISED BY

DATE REVISED

P:\proj1\02\4G820_plans\pse\24g820ua005.dgn

LAST REVISION 06-23-15 | DATE PLOTTED => 26-JUN-2015 | TIME PLOTTED => 09:51

BORDER LAST REVISED 7/2/2010 | USERNAME => s115152 | DGN FILE => 24g820ua005.dgn | RELATIVE BORDER SCALE IS IN INCHES 0 1 2 3 | UNIT 0147 | PROJECT NUMBER & PHASE 02140000631

Dist	COUNTY	ROUTE	POST MILES TOTAL PROJECT	SHEET No.	TOTAL SHEETS
02	Sis	5	R10.7/R19.5	249	327

REGISTERED ELECTRICAL ENGINEER 06-23-15 DATE

PLANS APPROVAL DATE 06-23-15

REGISTERED PROFESSIONAL ENGINEER THERESA ANDERSON No. C77957 Exp. 6-30-17 CIVIL STATE OF CALIFORNIA

THE STATE OF CALIFORNIA OR ITS OFFICERS OR AGENTS SHALL NOT BE RESPONSIBLE FOR THE ACCURACY OR COMPLETENESS OF SCANNED COPIES OF THIS PLAN SHEET.

NOTE:

1. FOR ACCURATE RIGHT OF WAY AND ACCESS DATA, CONTACT RIGHT OF WAY ENGINEERING AT THE DISTRICT OFFICE.

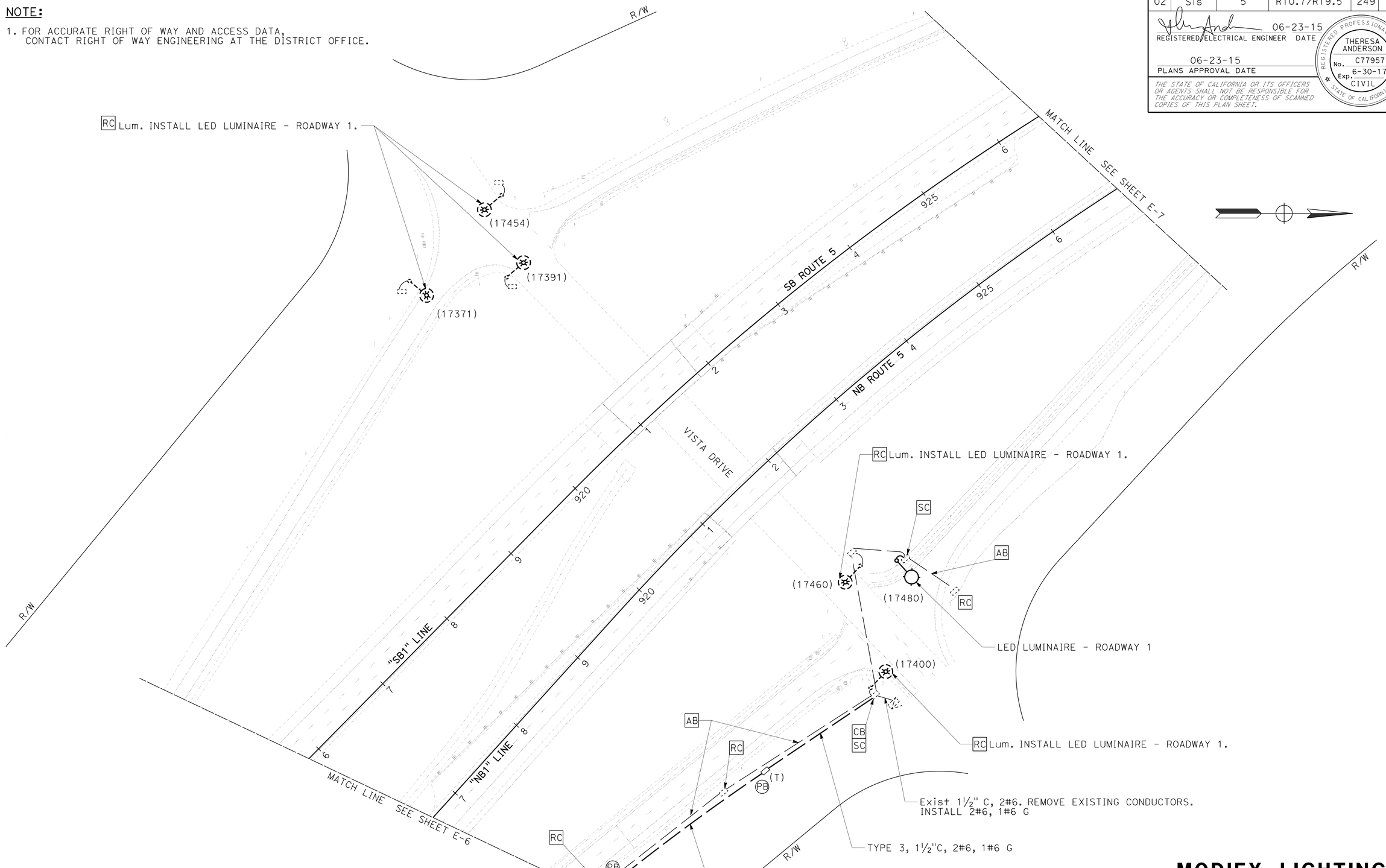

MODIFY LIGHTING

SCALE: 1" = 50'

E-6

APPROVED FOR ELECTRICAL WORK ONLY

STATE OF CALIFORNIA - DEPARTMENT OF TRANSPORTATION

Caltrans® ELECTRICAL DESIGN

FUNCTIONAL SUPERVISOR: ROB STINGER

CALCULATED-DESIGNED BY: TERI ANDERSON

CHECKED BY: ARTURO ROBLES

REVISED BY

DATE REVISED

P:\proj1\02\4G820_plans\pse\24g820ua006.dgn

LAST REVISION 06-23-15 | DATE PLOTTED => 26-JUN-2015 | TIME PLOTTED => 09:51

BORDER LAST REVISED 7/2/2010 | USERNAME => s115152 | DGN FILE => 24g820ua006.dgn | RELATIVE BORDER SCALE IS IN INCHES 0 1 2 3 | UNIT 0147 | PROJECT NUMBER & PHASE 02140000631

Dist	COUNTY	ROUTE	POST MILES TOTAL PROJECT	SHEET No.	TOTAL SHEETS
02	Sis	5	R10.7/R19.5	250	327

REGISTERED ELECTRICAL ENGINEER 06-23-15 DATE

PLANS APPROVAL DATE 06-23-15

REGISTERED PROFESSIONAL ENGINEER THERESA ANDERSON No. C77957 Exp. 6-30-17 CIVIL STATE OF CALIFORNIA

THE STATE OF CALIFORNIA OR ITS OFFICERS OR AGENTS SHALL NOT BE RESPONSIBLE FOR THE ACCURACY OR COMPLETENESS OF SCANNED COPIES OF THIS PLAN SHEET.

NOTE:

1. FOR ACCURATE RIGHT OF WAY AND ACCESS DATA, CONTACT RIGHT OF WAY ENGINEERING AT THE DISTRICT OFFICE.

LEGEND (THIS SHEET):

1 RC Lum. INSTALL LED LUMINAIRE - ROADWAY 1.

2 RC Lum. INSTALL LED LUMINAIRE - ROADWAY 2.

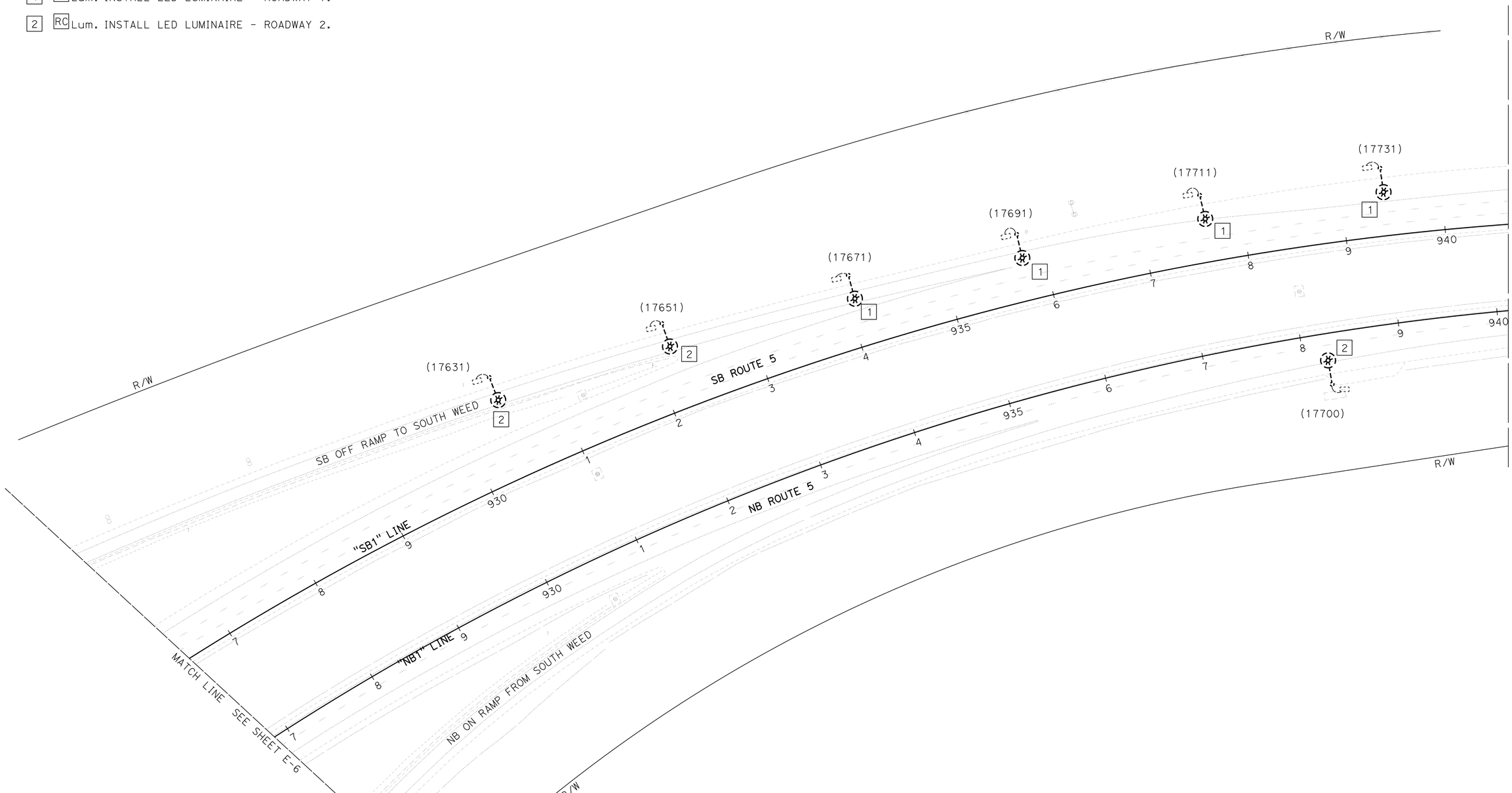

APPROVED FOR ELECTRICAL WORK ONLY

MODIFY LIGHTING

SCALE: 1" = 50'

E-7

STATE OF CALIFORNIA - DEPARTMENT OF TRANSPORTATION

Caltrans® ELECTRICAL DESIGN

FUNCTIONAL SUPERVISOR: ROB STINGER

CALCULATED-DESIGNED BY: TERI ANDERSON

CHECKED BY: ARTURO ROBLES

REVISED BY

DATE REVISED

P:\proj\02\4G820_plans\pse\24g820ua007.dgn

LAST REVISION 06-23-15

DATE PLOTTED => 26-JUN-2015

TIME PLOTTED => 09:51

Dist	COUNTY	ROUTE	POST MILES TOTAL PROJECT	SHEET No.	TOTAL SHEETS
02	Sis	5	R10.7/R19.5	251	327

REGISTERED ELECTRICAL ENGINEER 06-23-15 DATE

PLANS APPROVAL DATE 06-23-15

REGISTERED PROFESSIONAL ENGINEER THERESA ANDERSON No. C77957 Exp. 6-30-17 CIVIL STATE OF CALIFORNIA

THE STATE OF CALIFORNIA OR ITS OFFICERS OR AGENTS SHALL NOT BE RESPONSIBLE FOR THE ACCURACY OR COMPLETENESS OF SCANNED COPIES OF THIS PLAN SHEET.

NOTE:

1. FOR ACCURATE RIGHT OF WAY AND ACCESS DATA, CONTACT RIGHT OF WAY ENGINEERING AT THE DISTRICT OFFICE.

LEGEND (THIS SHEET):

[1] [RC] Lum. INSTALL LED LUMINAIRE - ROADWAY 1.

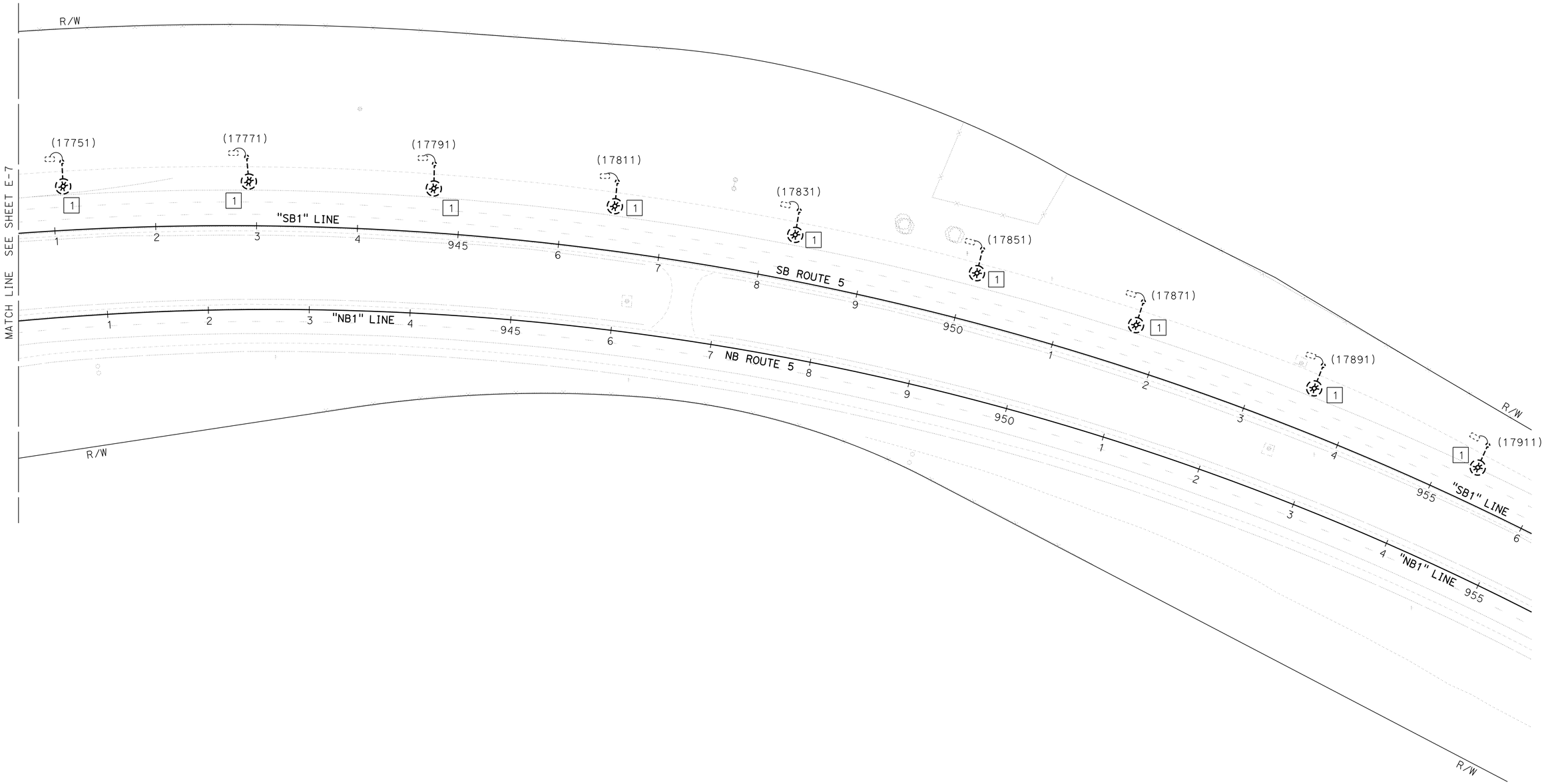

MODIFY LIGHTING

SCALE: 1" = 50'

E-8

APPROVED FOR ELECTRICAL WORK ONLY

REVISED BY | DATE REVISED

TERI ANDERSON | ARTURO ROBLES

CALCULATED-DESIGNED BY | CHECKED BY

FUNCTIONAL SUPERVISOR: ROB STINGER

STATE OF CALIFORNIA - DEPARTMENT OF TRANSPORTATION

Caltrans® ELECTRICAL DESIGN

P:\proj1\02\4G820_plans\pse\24g820ua008.dgn

LAST REVISION 06-23-15 | DATE PLOTTED => 26-JUN-2015 | TIME PLOTTED => 09:52

Dist	COUNTY	ROUTE	POST MILES TOTAL PROJECT	SHEET No.	TOTAL SHEETS
02	Sis	5	R10.7/R19.5	252	327

REGISTERED ELECTRICAL ENGINEER 06-23-15 DATE

PLANS APPROVAL DATE 06-23-15

REGISTERED PROFESSIONAL ENGINEER THERESA ANDERSON No. C77957 Exp. 6-30-17 CIVIL STATE OF CALIFORNIA

THE STATE OF CALIFORNIA OR ITS OFFICERS OR AGENTS SHALL NOT BE RESPONSIBLE FOR THE ACCURACY OR COMPLETENESS OF SCANNED COPIES OF THIS PLAN SHEET.

NOTE:

1. FOR ACCURATE RIGHT OF WAY AND ACCESS DATA, CONTACT RIGHT OF WAY ENGINEERING AT THE DISTRICT OFFICE.

LEGEND (THIS SHEET):

1 RC Lum. INSTALL LED LUMINAIRE - ROADWAY 1.

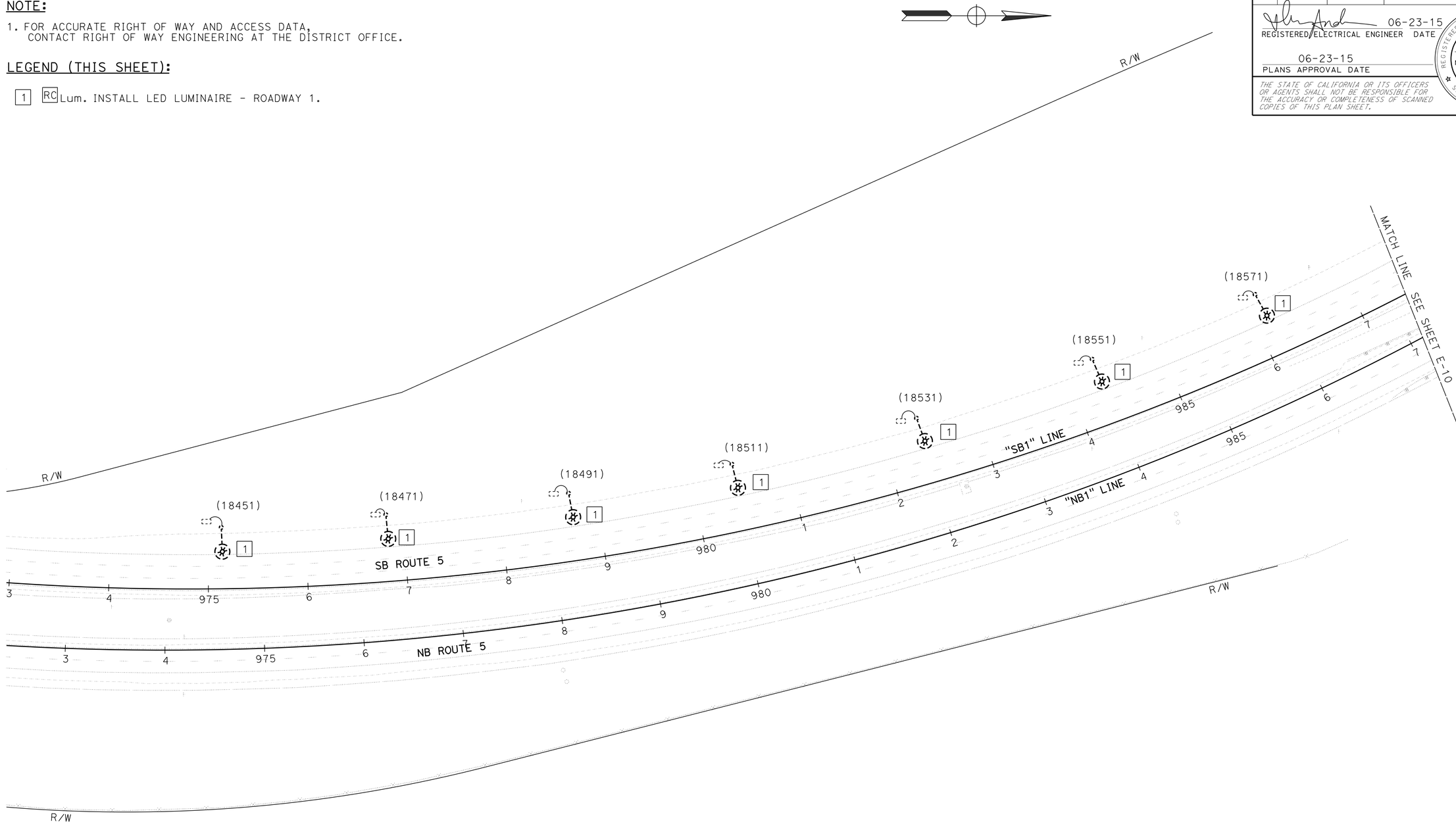

MODIFY LIGHTING

SCALE: 1" = 50'

E-9

APPROVED FOR ELECTRICAL WORK ONLY

STATE OF CALIFORNIA - DEPARTMENT OF TRANSPORTATION

Caltrans® ELECTRICAL DESIGN

FUNCTIONAL SUPERVISOR: ROB STINGER

CALCULATED-DESIGNED BY: TERI ANDERSON

CHECKED BY: ARTURO ROBLES

REVISED BY / DATE REVISED

P:\proj1\02\4G820_plans\pse\24g820ua009.dgn

LAST REVISION 06-23-15 | DATE PLOTTED => 26-JUN-2015 | TIME PLOTTED => 09:52

BORDER LAST REVISED 7/2/2010 | USERNAME => s115152 | DGN FILE => 24g820ua009.dgn | RELATIVE BORDER SCALE IS IN INCHES 0 1 2 3 | UNIT 0147 | PROJECT NUMBER & PHASE 02140000631

Dist	COUNTY	ROUTE	POST MILES TOTAL PROJECT	SHEET No.	TOTAL SHEETS
02	Sis	5	R10.7/R19.5	253	327

REGISTERED ELECTRICAL ENGINEER 06-23-15 DATE

06-23-15
PLANS APPROVAL DATE

REGISTERED PROFESSIONAL ENGINEER
THERESA ANDERSON
No. C77957
Exp. 6-30-17
CIVIL
STATE OF CALIFORNIA

THE STATE OF CALIFORNIA OR ITS OFFICERS OR AGENTS SHALL NOT BE RESPONSIBLE FOR THE ACCURACY OR COMPLETENESS OF SCANNED COPIES OF THIS PLAN SHEET.

NOTE:

1. FOR ACCURATE RIGHT OF WAY AND ACCESS DATA, CONTACT RIGHT OF WAY ENGINEERING AT THE DISTRICT OFFICE.

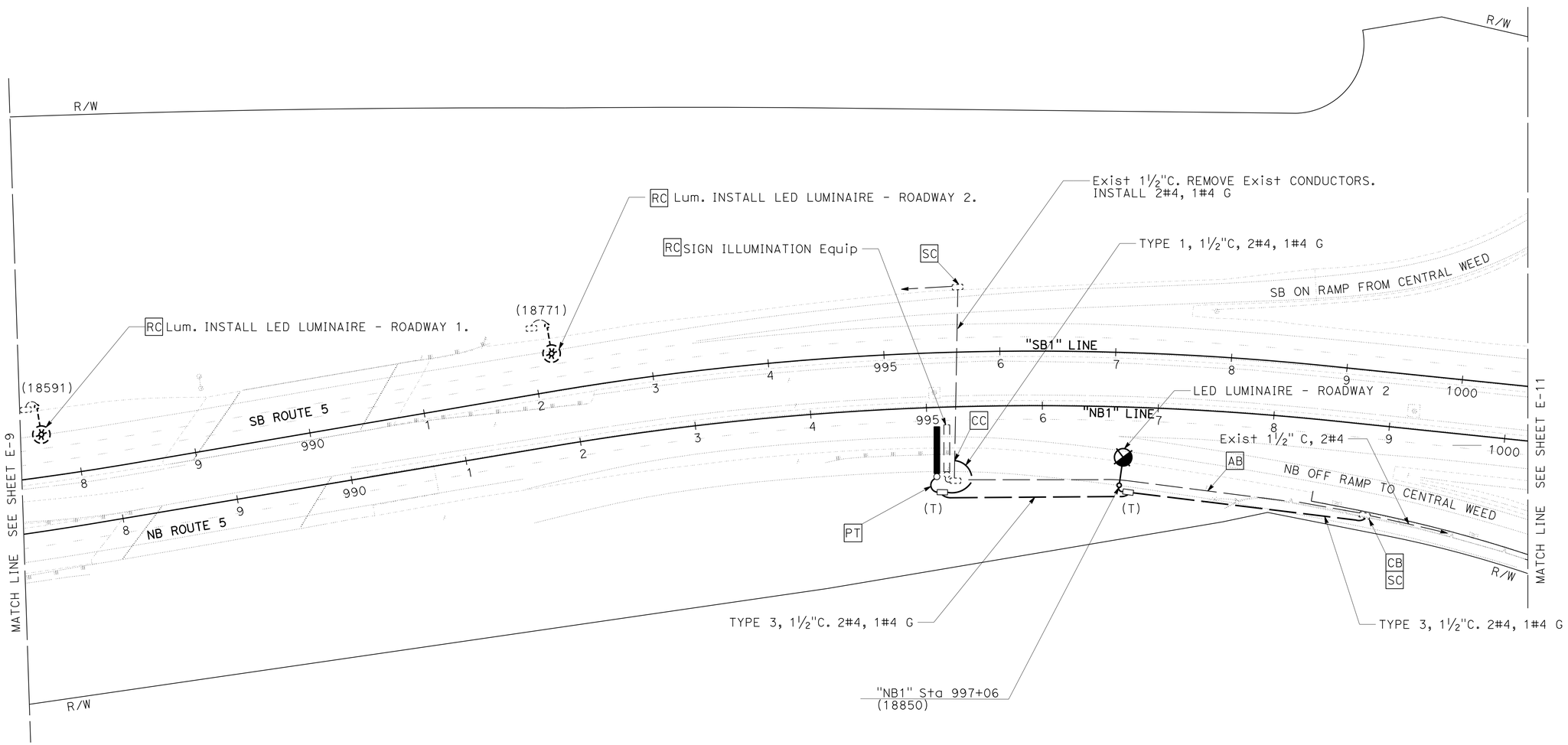

MODIFY LIGHTING

SCALE: 1" = 50'

E-10

APPROVED FOR ELECTRICAL WORK ONLY

STATE OF CALIFORNIA - DEPARTMENT OF TRANSPORTATION
Caltrans® ELECTRICAL DESIGN

FUNCTIONAL SUPERVISOR: ROB STINGER
CALCULATED-DESIGNED BY: TERI ANDERSON
CHECKED BY: ARTURO ROBLES
REVISED BY
DATE REVISED

P:\proj1\02\4G820_plans\pse\24g820ua010.dgn

LAST REVISION 06-23-15
DATE PLOTTED => 26-JUN-2015
TIME PLOTTED => 09:52

Dist	COUNTY	ROUTE	POST MILES TOTAL PROJECT	SHEET No.	TOTAL SHEETS
02	Sis	5	R10.7/R19.5	254	327

REGISTERED ELECTRICAL ENGINEER 06-23-15 DATE

PLANS APPROVAL DATE 06-23-15

REGISTERED PROFESSIONAL ENGINEER THERESA ANDERSON No. C77957 Exp. 6-30-17 CIVIL STATE OF CALIFORNIA

THE STATE OF CALIFORNIA OR ITS OFFICERS OR AGENTS SHALL NOT BE RESPONSIBLE FOR THE ACCURACY OR COMPLETENESS OF SCANNED COPIES OF THIS PLAN SHEET.

NOTE:

1. FOR ACCURATE RIGHT OF WAY AND ACCESS DATA, CONTACT RIGHT OF WAY ENGINEERING AT THE DISTRICT OFFICE.

LEGEND (THIS SHEET):

1 RC Lum. INSTALL LED LUMINAIRE - ROADWAY 1.

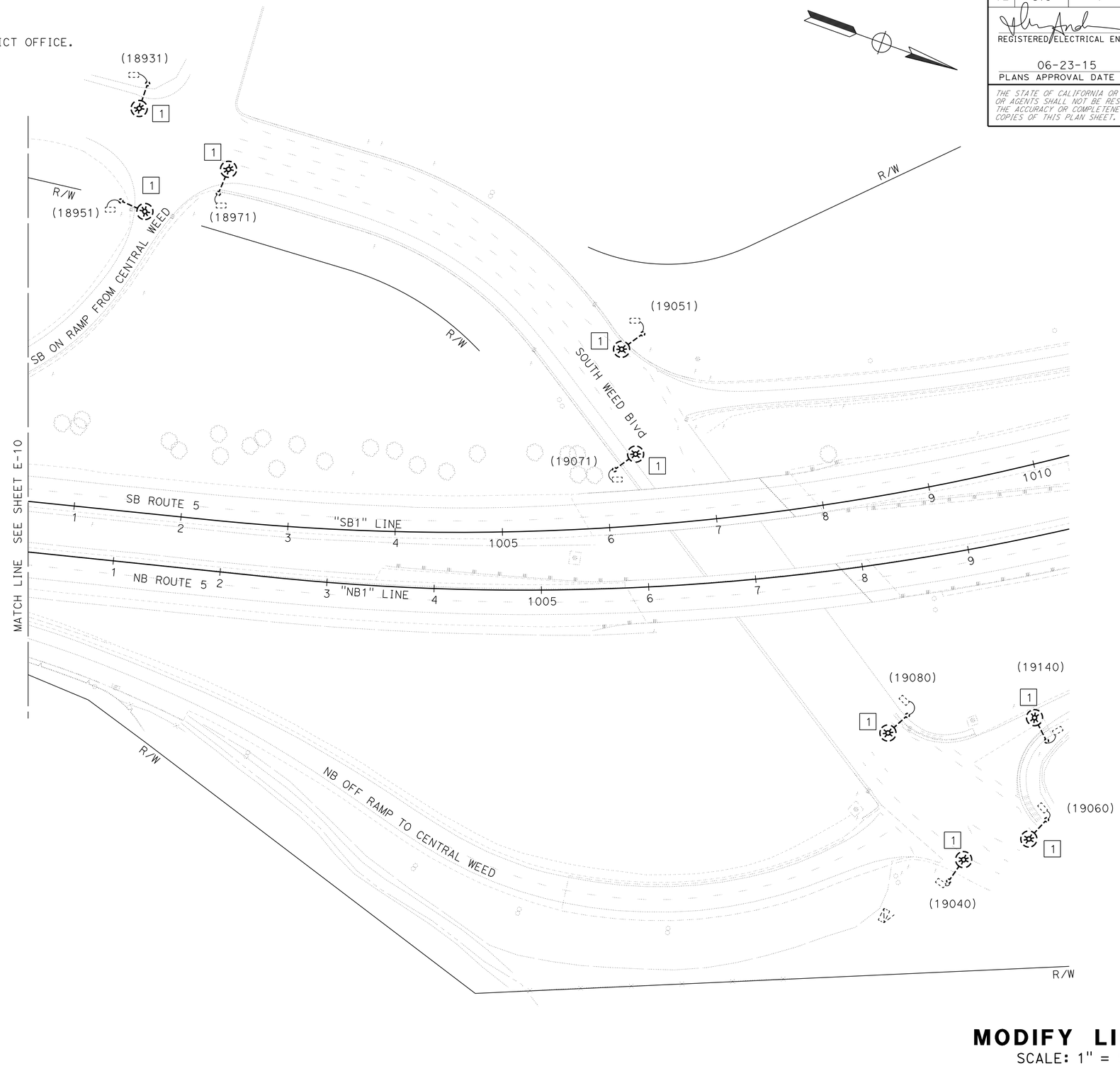

MODIFY LIGHTING

SCALE: 1" = 50'

E-11

APPROVED FOR ELECTRICAL WORK ONLY

STATE OF CALIFORNIA - DEPARTMENT OF TRANSPORTATION

Caltrans® ELECTRICAL DESIGN

FUNCTIONAL SUPERVISOR: ROB STINGER

CALCULATED-DESIGNED BY: TERI ANDERSON

CHECKED BY: ARTURO ROBLES

REVISED BY | DATE REVISED

P:\proj1\02\4g820_plans\pse\24g820ua011.dgn

LAST REVISION 06-23-15 | DATE PLOTTED => 26-JUN-2015 | TIME PLOTTED => 09:52

Dist	COUNTY	ROUTE	POST MILES TOTAL PROJECT	SHEET No.	TOTAL SHEETS
02	Sis	5	R10.7/R19.5	255	327

REGISTERED ELECTRICAL ENGINEER 06-23-15 DATE

PLANS APPROVAL DATE 06-23-15

REGISTERED PROFESSIONAL ENGINEER THERESA ANDERSON No. C77957 Exp. 6-30-17 CIVIL STATE OF CALIFORNIA

THE STATE OF CALIFORNIA OR ITS OFFICERS OR AGENTS SHALL NOT BE RESPONSIBLE FOR THE ACCURACY OR COMPLETENESS OF SCANNED COPIES OF THIS PLAN SHEET.

NOTE:

1. FOR ACCURATE RIGHT OF WAY AND ACCESS DATA, CONTACT RIGHT OF WAY ENGINEERING AT THE DISTRICT OFFICE.
2. ABANDON EXISTING LOOP DETECTORS.
3. REUSE LOOP DETECTOR SHOULDER TERMINATIONS.

4 COIL 10' OF CABLE IN THE PULL BOX.

5 COIL 10' OF CABLE IN CABINET.

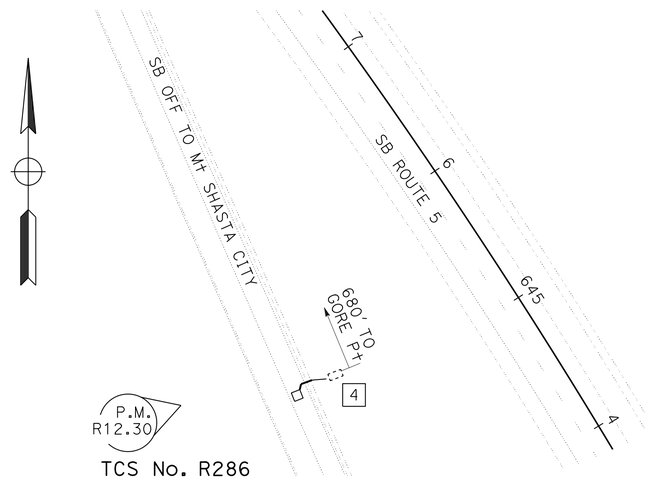

TCS No. R286

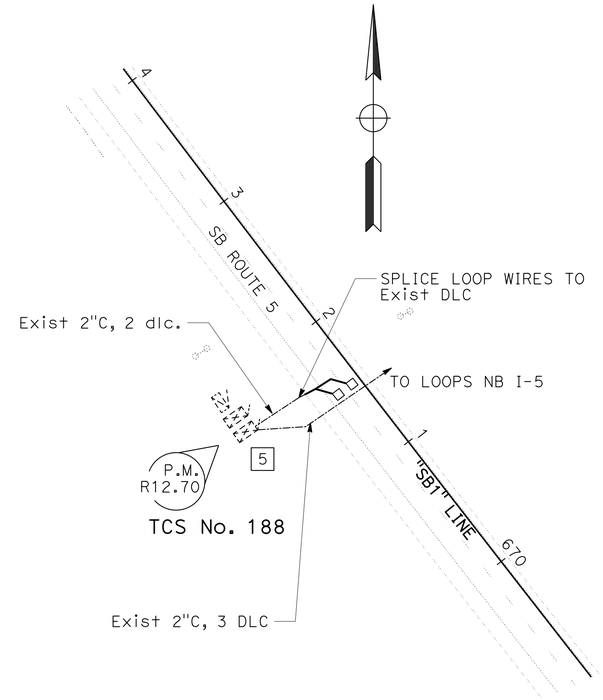

TCS No. 188

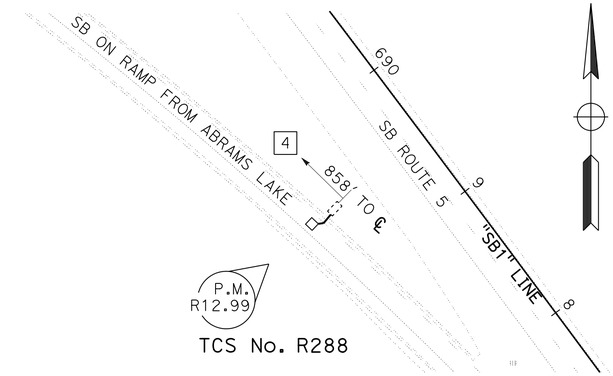

TCS No. R288

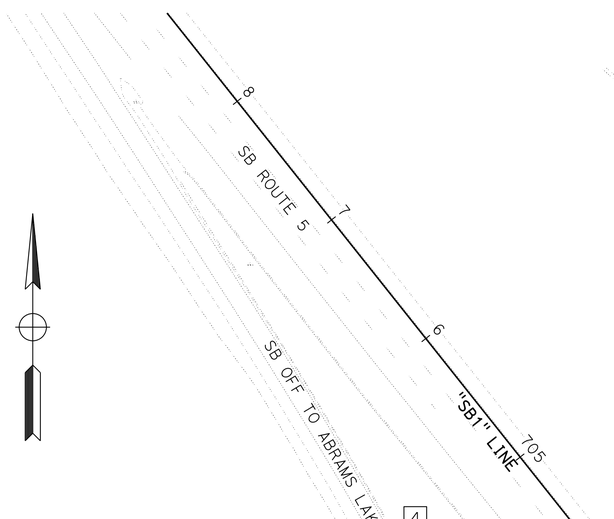

TCS No. R290

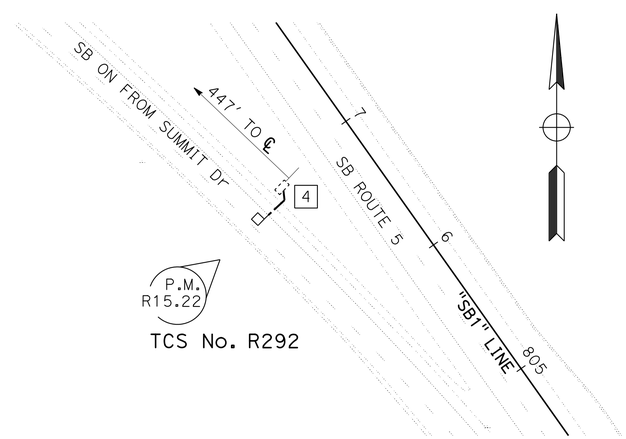

TCS No. R292

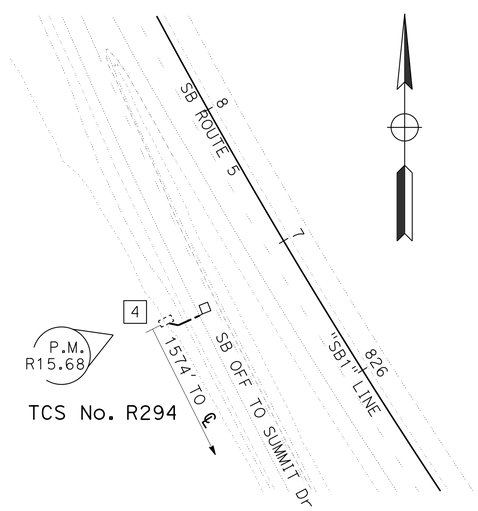

TCS No. R294

MODIFY TRAFFIC COUNT STATION

NO SCALE

E-12

APPROVED FOR ELECTRICAL WORK ONLY

REVISED BY	DATE REVISED
TERI ANDERSON	ARTURO ROBLES
CALCULATED-DESIGNED BY	CHECKED BY
FUNCTIONAL SUPERVISOR	ROB STINGER

STATE OF CALIFORNIA - DEPARTMENT OF TRANSPORTATION

Caltrans® ELECTRICAL DESIGN

P:\proj1\02\4G820_plans\pse\24g820ua012.dgn

LAST REVISION 06-23-15 | DATE PLOTTED => 26-JUN-2015 TIME PLOTTED => 09:52

Dist	COUNTY	ROUTE	POST MILES TOTAL PROJECT	SHEET No.	TOTAL SHEETS
02	Sis	5	R10.7/R19.5	256	327

REGISTERED ELECTRICAL ENGINEER 06-23-15 DATE

PLANS APPROVAL DATE 06-23-15

REGISTERED PROFESSIONAL ENGINEER THERESA ANDERSON No. C77957 Exp. 6-30-17 CIVIL STATE OF CALIFORNIA

THE STATE OF CALIFORNIA OR ITS OFFICERS OR AGENTS SHALL NOT BE RESPONSIBLE FOR THE ACCURACY OR COMPLETENESS OF SCANNED COPIES OF THIS PLAN SHEET.

NOTES:

1. FOR ACCURATE RIGHT OF WAY AND ACCESS DATA, CONTACT RIGHT OF WAY ENGINEERING AT THE DISTRICT OFFICE.
2. ABANDON EXISTING LOOP DETECTORS.
3. REUSE LOOP DETECTOR SHOULDER TERMINATIONS.
4. COIL 10' OF CABLES IN THE PULL BOX.

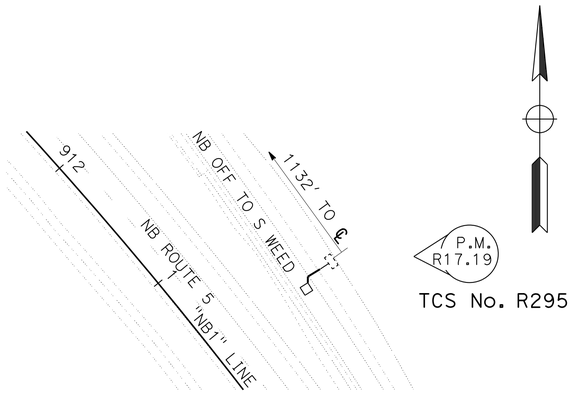

TCS No. R295

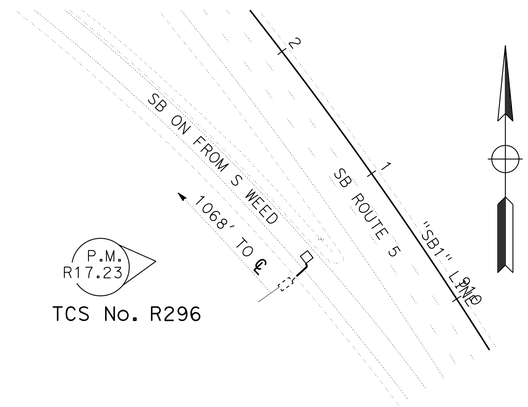

TCS No. R296

TCS No. R297

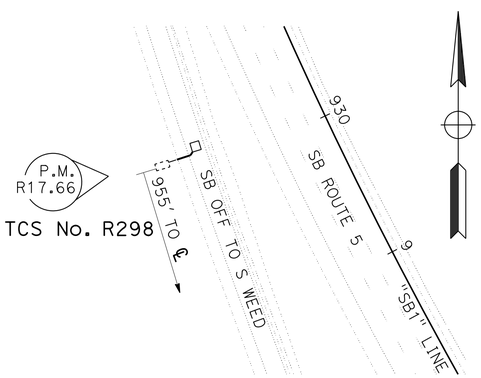

TCS No. R298

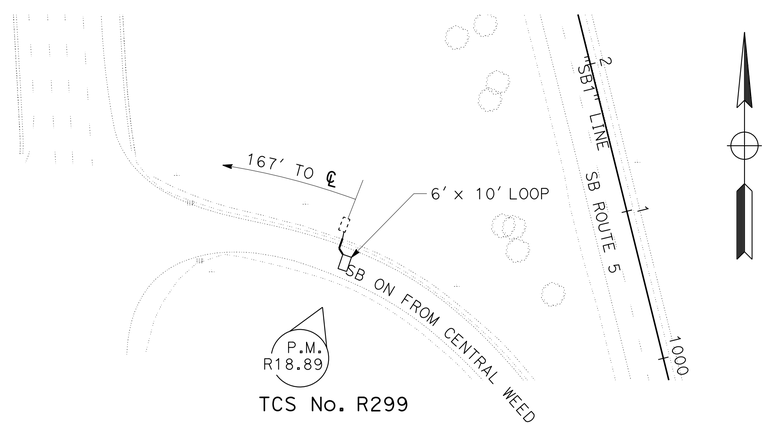

TCS No. R299

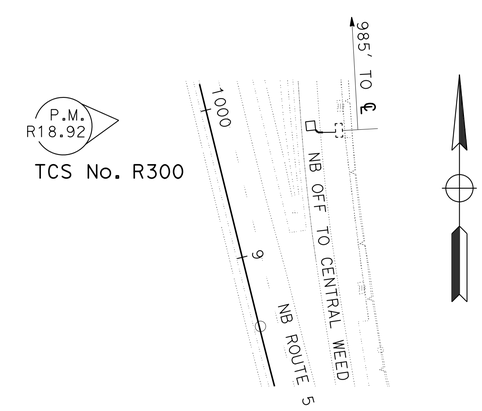

TCS No. R300

MODIFY TRAFFIC COUNT STATION

NO SCALE

APPROVED FOR ELECTRICAL WORK ONLY

E-13

REVISED BY	DATE REVISED
TERI ANDERSON	
ARTURO ROBLES	
CALCULATED-DESIGNED BY	
CHECKED BY	
FUNCTIONAL SUPERVISOR	
ROB STINGER	

STATE OF CALIFORNIA - DEPARTMENT OF TRANSPORTATION

Caltrans® ELECTRICAL DESIGN

P:\proj1\02\4G820_plans\pse\24g820ua013.dgn

LAST REVISION 06-23-15 | DATE PLOTTED => 26-JUN-2015 | TIME PLOTTED => 09:52

Dist	COUNTY	ROUTE	POST MILES TOTAL PROJECT	SHEET No.	TOTAL SHEETS
02	Sis	5	R10.7/R19.5	257	327

REGISTERED ELECTRICAL ENGINEER 06-23-15 DATE

PLANS APPROVAL DATE 06-23-15

REGISTERED PROFESSIONAL ENGINEER JEREMIAH PEARCE No. E19475 Exp. 6-30-17 CIVIL STATE OF CALIFORNIA

THE STATE OF CALIFORNIA OR ITS OFFICERS OR AGENTS SHALL NOT BE RESPONSIBLE FOR THE ACCURACY OR COMPLETENESS OF SCANNED COPIES OF THIS PLAN SHEET.

NOTES:

1. FOR ACCURATE RIGHT OF WAY DATA, CONTACT RIGHT OF WAY ENGINEERING AT THE DISTRICT OFFICE.
2. FOR FOHDPE TRENCH DETAILS SEE SHEET E-20.

NOTES (THIS SHEET):

1 2" TYPE 1 CONDUIT, 6SMFO SEE DETAILS SHEET E-20.

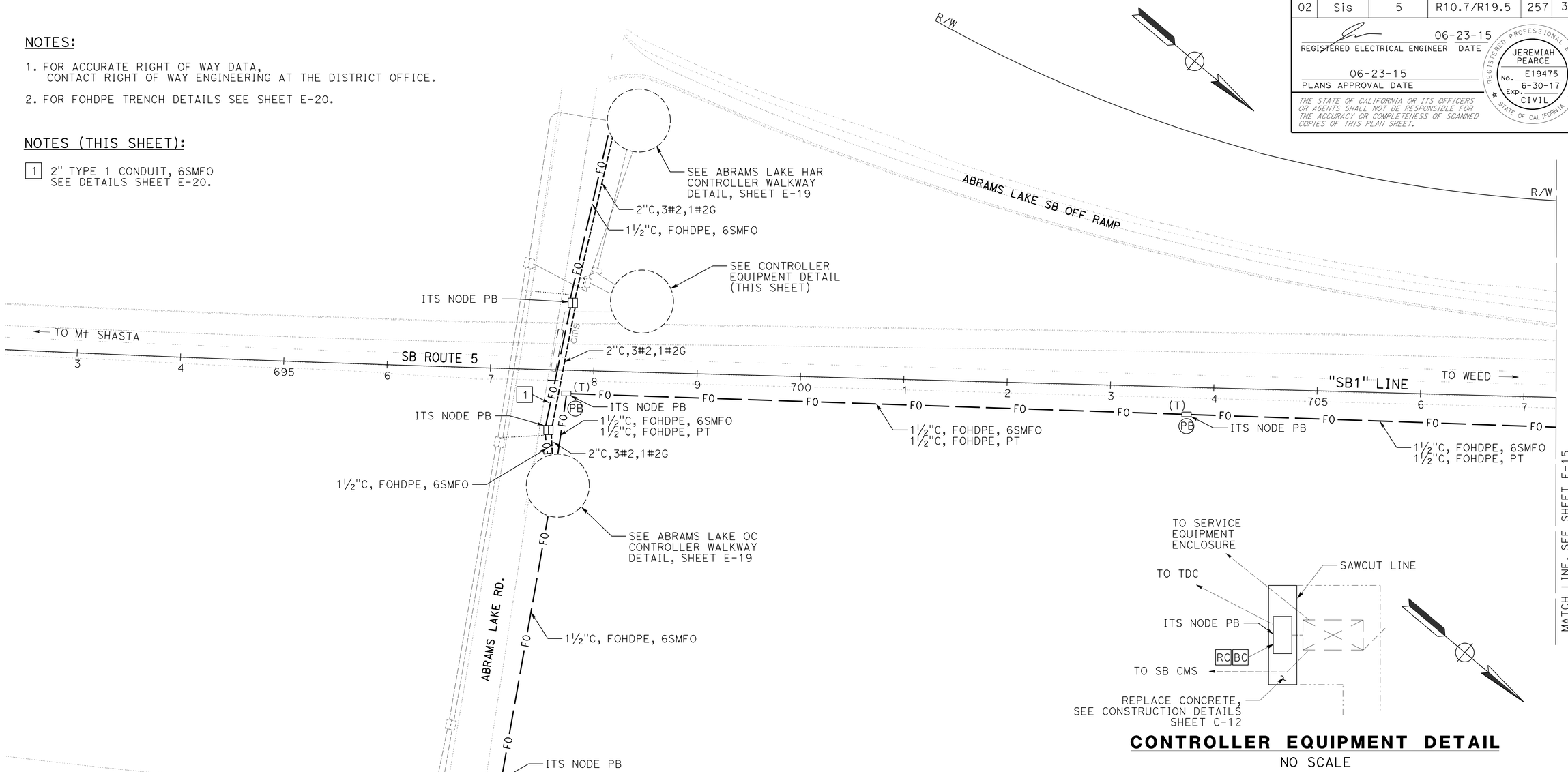

CONTROLLER EQUIPMENT DETAIL

NO SCALE

EXISTING TRAFFIC MANAGEMENT SYSTEM ELEMENTS TO BE MAINTAINED

TYPE	PM	DESCRIPTION
CCTV	Sis-5-19.27	I5-US97 AT NB ON-RAMP SHOULDER
CCTV	Sis-5-18.38	SOUTH WEED ON RIGHT NB SHOULDER
CCTV	Sis-5-15.34	SUMMIT DRIVE ON RIGHT SB SHOULDER

FIBER OPTIC SYSTEM

SCALE: 1" = 50'

E-14

APPROVED FOR ELECTRICAL WORK ONLY

REVISED BY | DATE REVISED

LONNIE HOBBS | JEREMIAH PEARCE

CALCULATED-DESIGNED BY | CHECKED BY

FUNCTIONAL SUPERVISOR: IAN TURNBULL

STATE OF CALIFORNIA - DEPARTMENT OF TRANSPORTATION

Caltrans® ITS ENGINEERING AND SUPPORT

P:\proj1\02\4G820_plans\pse\24g820ua014.dgn

LAST REVISION 06-23-15 | DATE PLOTTED => 26-JUN-2015 | TIME PLOTTED => 09:52

Dist	COUNTY	ROUTE	POST MILES TOTAL PROJECT	SHEET No.	TOTAL SHEETS
02	Sis	5	R10.7/R19.5	258	327

REGISTERED ELECTRICAL ENGINEER 06-23-15 DATE

PLANS APPROVAL DATE 06-23-15

REGISTERED PROFESSIONAL ENGINEER JEREMIAH PEARCE No. E19475 Exp. 6-30-17 CIVIL STATE OF CALIFORNIA

THE STATE OF CALIFORNIA OR ITS OFFICERS OR AGENTS SHALL NOT BE RESPONSIBLE FOR THE ACCURACY OR COMPLETENESS OF SCANNED COPIES OF THIS PLAN SHEET.

NOTE:

1. FOR ACCURATE RIGHT OF WAY AND ACCESS DATA, CONTACT RIGHT OF WAY ENGINEERING AT THE DISTRICT OFFICE.
2. FOR FOHDPE TRENCH DETAILS SEE SHEET E-20.

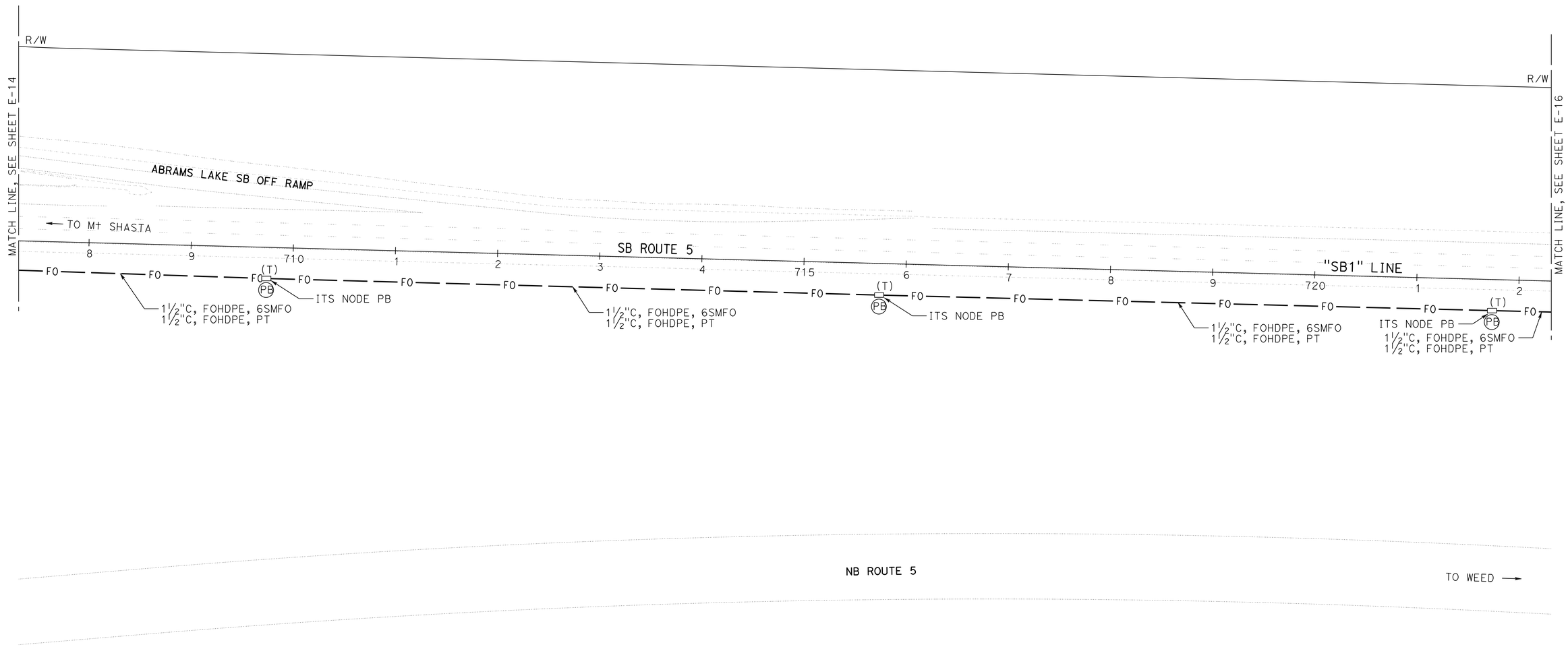

R/W

APPROVED FOR ELECTRICAL WORK ONLY

FIBER OPTIC SYSTEM

SCALE: 1" = 50'

E-15

LONNIE HOBBS — CALCULATED-DESIGNED BY
JEREMIAH PEARCE — CHECKED BY
REVISED BY — DATE REVISED
IAN TURNBULL — FUNCTIONAL SUPERVISOR

STATE OF CALIFORNIA - DEPARTMENT OF TRANSPORTATION
Caltrans® ITS ENGINEERING AND SUPPORT

P:\proj1\02\40820_plans\pse\24g820ua015.dgn

LAST REVISION 06-23-15 DATE PLOTTED => 26-JUN-2015 TIME PLOTTED => 09:52

Dist	COUNTY	ROUTE	POST MILES TOTAL PROJECT	SHEET No.	TOTAL SHEETS
02	Sis	5	R10.7/R19.5	259	327

06-23-15
REGISTERED ELECTRICAL ENGINEER DATE

06-23-15
PLANS APPROVAL DATE

REGISTERED PROFESSIONAL ENGINEER
JEREMIAH PEARCE
No. E19475
Exp. 6-30-17
CIVIL
STATE OF CALIFORNIA

THE STATE OF CALIFORNIA OR ITS OFFICERS OR AGENTS SHALL NOT BE RESPONSIBLE FOR THE ACCURACY OR COMPLETENESS OF SCANNED COPIES OF THIS PLAN SHEET.

NOTES:

1. FOR ACCURATE RIGHT OF WAY AND ACCESS DATA, CONTACT RIGHT OF WAY ENGINEERING AT THE DISTRICT OFFICE.

2. FOR FOHDPE TRENCH DETAILS SEE SHEET E-20.

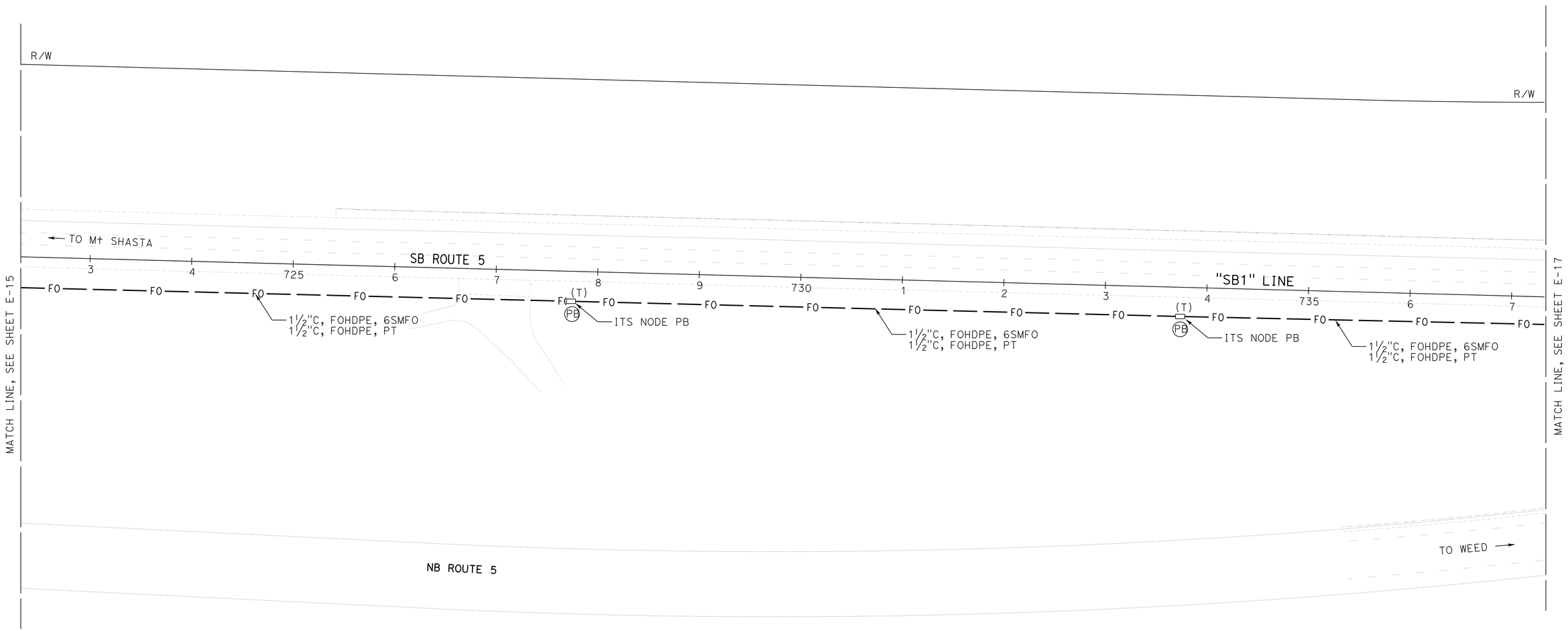

FIBER OPTIC SYSTEM

SCALE: 1" = 50'

E-16

APPROVED FOR ELECTRICAL WORK ONLY

REVISED BY	
DATE REVISED	
LONNIE HOBBS	
JEREMIAH PEARCE	
CALCULATED-DESIGNED BY	
CHECKED BY	
FUNCTIONAL SUPERVISOR	
IAN TURNBULL	

STATE OF CALIFORNIA - DEPARTMENT OF TRANSPORTATION
Caltrans
ITS ENGINEERING AND SUPPORT

P:\proj\02\40820_plans\pse\24g820ua016.dgn

LAST REVISION 06-23-15 | DATE PLOTTED => 26-JUN-2015 | TIME PLOTTED => 09:52

Dist	COUNTY	ROUTE	POST MILES TOTAL PROJECT	SHEET No.	TOTAL SHEETS
02	Sis	5	R10.7/R19.5	260	327

06-23-15
REGISTERED ELECTRICAL ENGINEER DATE

06-23-15
PLANS APPROVAL DATE

REGISTERED PROFESSIONAL ENGINEER
JEREMIAH PEARCE
No. E19475
Exp. 6-30-17
CIVIL
STATE OF CALIFORNIA

THE STATE OF CALIFORNIA OR ITS OFFICERS OR AGENTS SHALL NOT BE RESPONSIBLE FOR THE ACCURACY OR COMPLETENESS OF SCANNED COPIES OF THIS PLAN SHEET.

NOTE:

1. FOR ACCURATE RIGHT OF WAY DATA, CONTACT RIGHT OF WAY ENGINEERING AT THE DISTRICT OFFICE.
2. FOR FOHDPE TRENCH DETAILS SEE SHEET E-20.

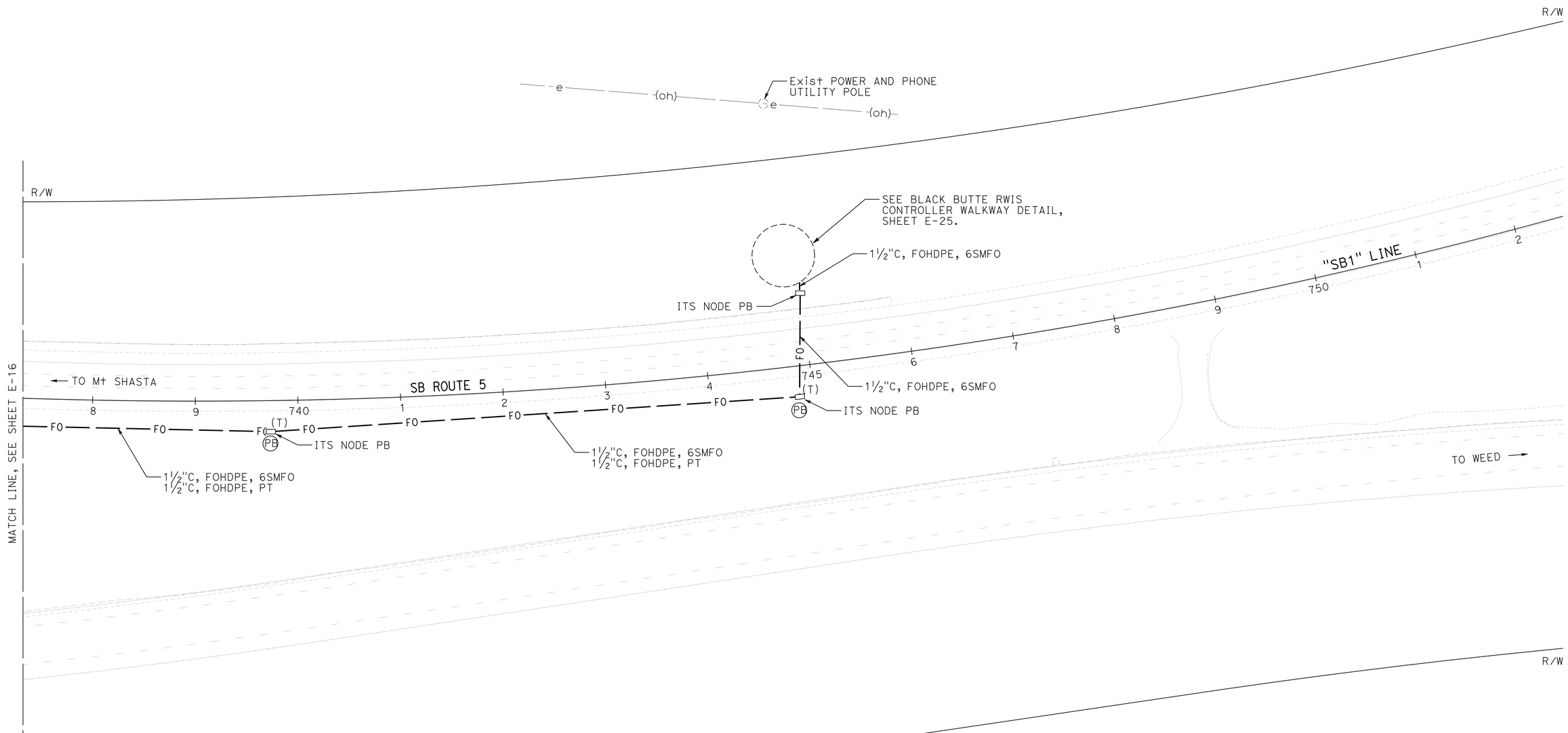

FIBER OPTIC SYSTEM

SCALE: 1" = 50'

E-17

APPROVED FOR ELECTRICAL WORK ONLY

STATE OF CALIFORNIA - DEPARTMENT OF TRANSPORTATION
Caltrans
ITS ENGINEERING AND SUPPORT

FUNCTIONAL SUPERVISOR: IAN TURNBULL
CALCULATED-DESIGNED BY: LONNIE HOBBS
CHECKED BY: JEREMIAH PEARCE
REVISED BY
DATE REVISED

P:\proj1\02\4G820_plans\pse\24g820ua017.dgn

LAST REVISION 06-23-15
DATE PLOTTED => 26-JUN-2015
TIME PLOTTED => 09:52

BORDER LAST REVISED 7/2/2010
USERNAME => s115152
DGN FILE => 24g820ua017.dgn
RELATIVE BORDER SCALE IS IN INCHES 0 1 2 3
UNIT 0147
PROJECT NUMBER & PHASE 02140000631

Dist	COUNTY	ROUTE	POST MILES TOTAL PROJECT	SHEET No.	TOTAL SHEETS
02	Sis	5	R10.7/R19.5	261	327

REGISTERED ELECTRICAL ENGINEER 06-23-15 DATE

PLANS APPROVAL DATE 06-23-15

REGISTERED PROFESSIONAL ENGINEER JEREMIAH PEARCE No. E19475 Exp. 6-30-17 CIVIL STATE OF CALIFORNIA

THE STATE OF CALIFORNIA OR ITS OFFICERS OR AGENTS SHALL NOT BE RESPONSIBLE FOR THE ACCURACY OR COMPLETENESS OF SCANNED COPIES OF THIS PLAN SHEET.

NOTE:

1. FOR FOHDPE TRENCH DETAILS SEE SHEET E-20.

NOTES (THIS SHEET):

1. INSTALL DEPARTMENT FURNISHED BBS CABINET, NEATLY COIL 10′ OF CONDUCTORS IN BOTTOM OF CABINET.
2. INSTALL DEPARTMENT FURNISHED ITS EQUPMENT CABINET, NEATLY COIL 10′ OF CONDUCTORS AND 50′ OF 6SMFO IN BOTTOM OF CABINET.
3. 3"C, 2#8, 1#8 G (CAB POWER), 2#12 (BLACK AND WHITE) 1#12 G, 2#12 (BLUE AND WHITE)
4. 3"C, 2#12 (BLACK AND WHITE) 1#12 G, 2#12 (BLUE AND WHITE)
5. REPLACE EXISTING PULL BOX LIDS

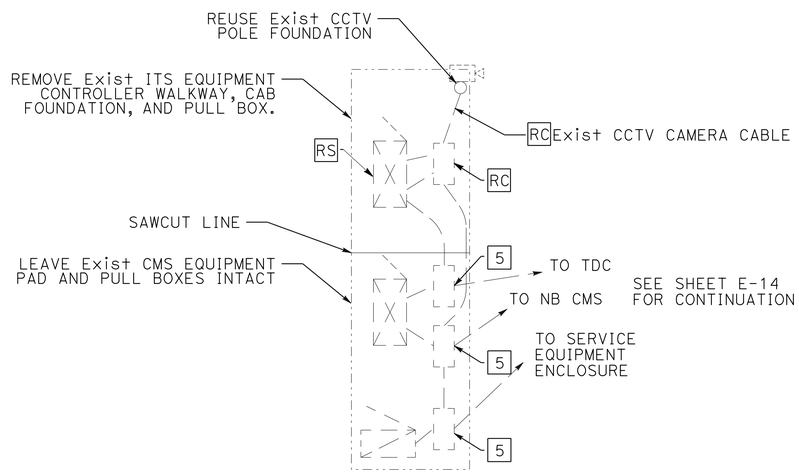

Exist ABRAMS LAKE CCTV CONTROLLER WALKWAY DETAIL

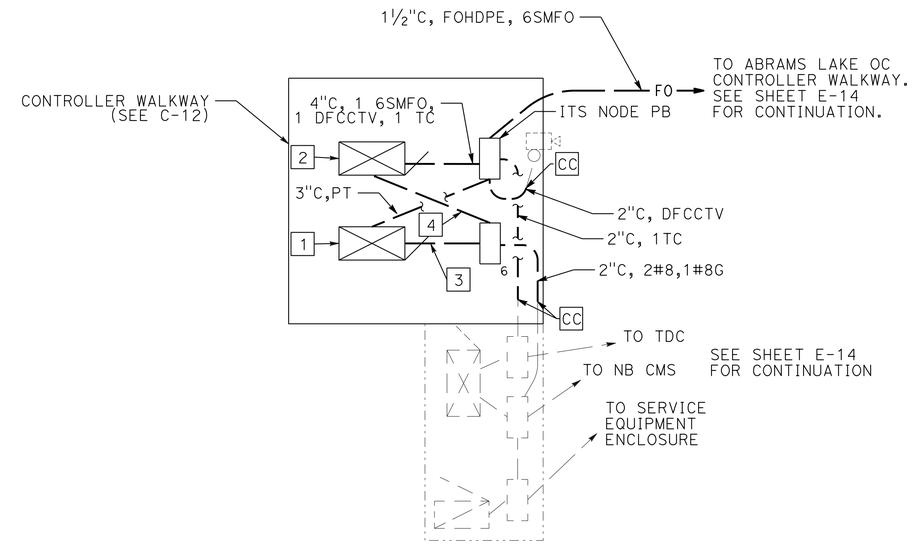

ABRAMS LAKE CCTV CONTROLLER WALKWAY DETAIL

FIBER OPTIC SYSTEM DETAILS

NO SCALE

E-18

REVISED BY | DATE REVISED

LONNIE HOBBS | JEREMIAH PEARCE

CALCULATED-DESIGNED BY | CHECKED BY

FUNCTIONAL SUPERVISOR: IAN TURNBULL

STATE OF CALIFORNIA - DEPARTMENT OF TRANSPORTATION

Caltrans® ITS ENGINEERING AND SUPPORT

P:\proj1\02\46820_plans\pse\24g820ua018.dgn

LAST REVISION 06-23-15 | DATE PLOTTED => 26-JUN-2015 | TIME PLOTTED => 09:52

Dist	COUNTY	ROUTE	POST MILES TOTAL PROJECT	SHEET No.	TOTAL SHEETS
02	Sis	5	R10.7/R19.5	262	327

REGISTERED ELECTRICAL ENGINEER 06-23-15 DATE

PLANS APPROVAL DATE 06-23-15

REGISTERED PROFESSIONAL ENGINEER JEREMIAH PEARCE No. E19475 Exp. 6-30-17 CIVIL STATE OF CALIFORNIA

THE STATE OF CALIFORNIA OR ITS OFFICERS OR AGENTS SHALL NOT BE RESPONSIBLE FOR THE ACCURACY OR COMPLETENESS OF SCANNED COPIES OF THIS PLAN SHEET.

NOTES (THIS SHEET):

1. INSTALL DEPARTMENT FURNISHED BBS CABINET, NEATLY COIL 10′ OF CONDUCTORS IN BOTTOM OF CABINET.
2. INSTALL DEPARTMENT FURNISHED ITS NODE EQUPMENT CABINET, NEATLY COIL 10′ OF CONDUCTORS AND 50′ OF 6SMFO IN BOTTOM OF CABINET.
3. 3"C, 2#8, 1#8 G (CAB POWER), 2#12 (BLACK AND WHITE) 1#12 G, 2#12 (BLUE AND WHITE)
4. 3"C, 2#12 (BLACK AND WHITE) 1#12 G, 2#12 (BLUE AND WHITE)
5. Exist 2"C, PULL 3#1, 1#1G FROM Exist SERVICE ENCLOSURE TO Exist PULL BOX, TERMINATE CONDUCTORS IN NEW SERVICE ENCLOSURE.
6. Exist 3"C, 9#1, 1#1G, 2#6. REMOVE 3#1, ADD 3#2, AND 2#10. ADD 3"C,PT
7. Exist 3"C, 2#6, 2#10, REMOVE 2#10. Exist 3"C,PT.
8. Exist 1"C, REMOVE 2#10, 1#10G, ADD 2#10, 1#10G
9. RC Exist TYPE III-AF SERVICE EQUIPMENT ENCLOSURE AND Fdn, INSTALL NEW TYPE III-AF (SEE WIRING DIAGRAM E-32 AND BASE DETAIL E-31)
10. RC Exist TYPE A TDC AND Fdn.
11. NOT ALL Exist CONDUITS SHOWN FOR CLARITY.

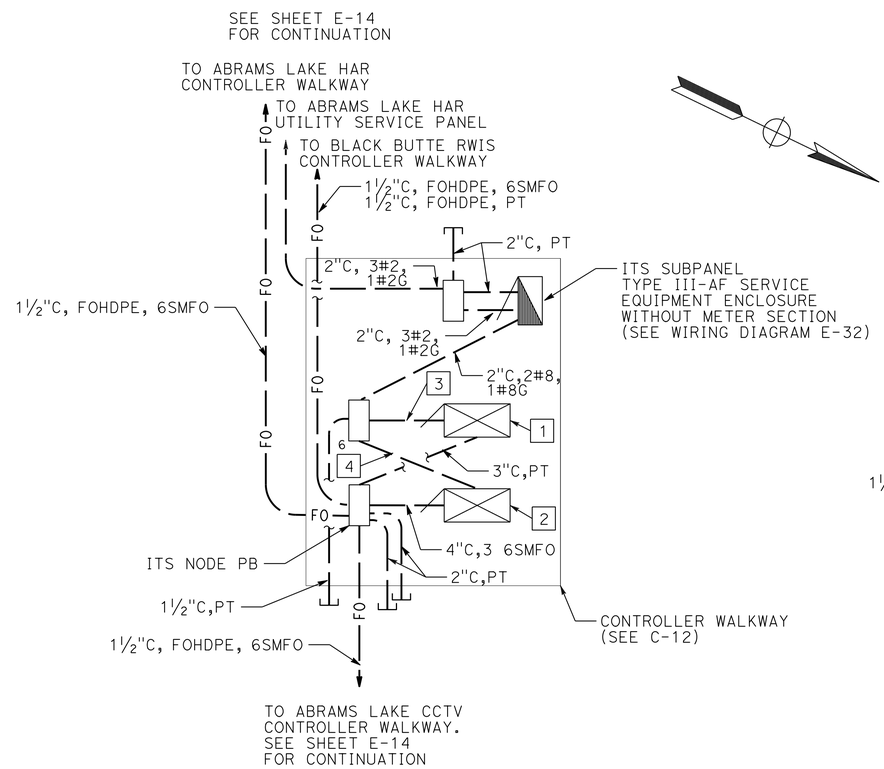

ABRAMS LAKE OC CONTROLLER WALKWAY DETAIL

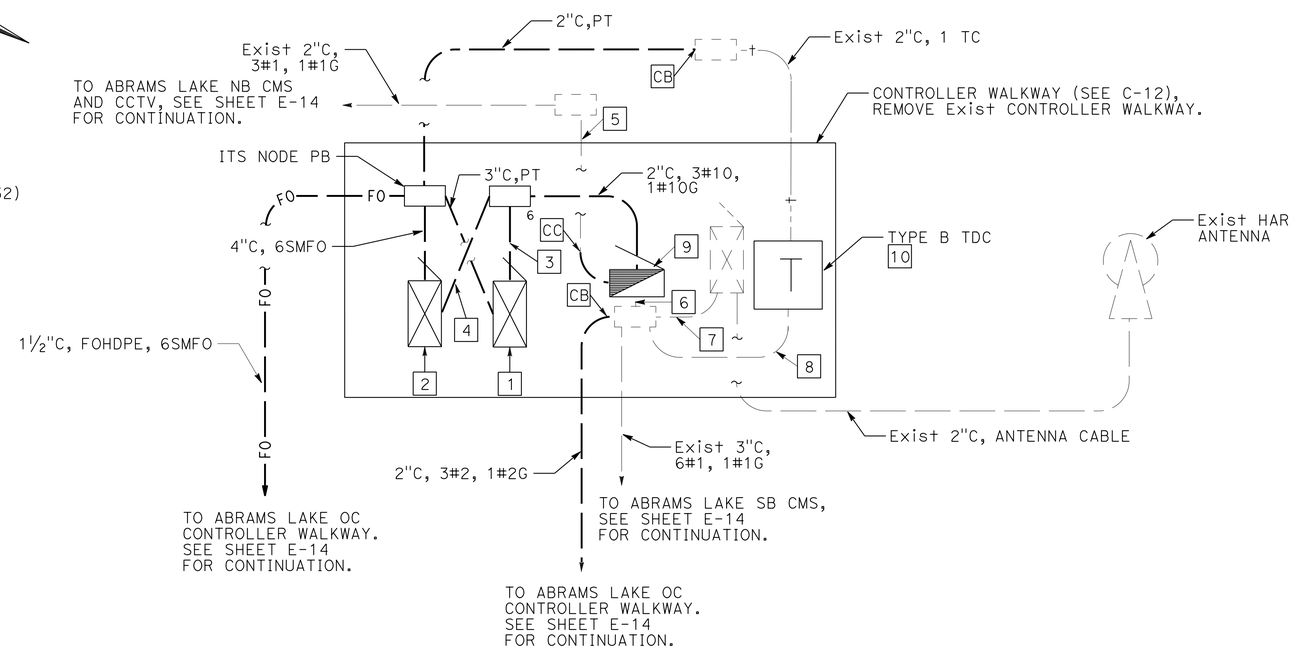

ABRAMS LAKE HAR CONTROLLER WALKWAY DETAIL

FIBER OPTIC SYSTEM DETAILS

NO SCALE

E-19

APPROVED FOR ELECTRICAL WORK ONLY

STATE OF CALIFORNIA - DEPARTMENT OF TRANSPORTATION
Caltrans
ITS ENGINEERING AND SUPPORT

FUNCTIONAL SUPERVISOR: IAN TURNBULL
CALCULATED-DESIGNED BY: LONNIE HOBBS
CHECKED BY: JEREMIAH PEARCE
REVISED BY
DATE REVISED

P:\proj1\02\4G820_plans\pse\24g820ua019.dgn

LAST REVISION 06-23-15
DATE PLOTTED => 26-JUN-2015
TIME PLOTTED => 09:52

Dist	COUNTY	ROUTE	POST MILES TOTAL PROJECT	SHEET No.	TOTAL SHEETS
02	Sis	5	R10.7/R19.5	263	327

REGISTERED ELECTRICAL ENGINEER 06-23-15 DATE

PLANS APPROVAL DATE 06-23-15

REGISTERED PROFESSIONAL ENGINEER JEREMIAH PEARCE No. E19475 Exp. 6-30-17 CIVIL STATE OF CALIFORNIA

THE STATE OF CALIFORNIA OR ITS OFFICERS OR AGENTS SHALL NOT BE RESPONSIBLE FOR THE ACCURACY OR COMPLETENESS OF SCANNED COPIES OF THIS PLAN SHEET.

NOTES:

1. CONTRACTOR MUST VERIFY CONTROLLING FIELD DIMENSIONS BEFORE ORDERING, FABRICATING, AND INSTALLING ANY MATERIALS

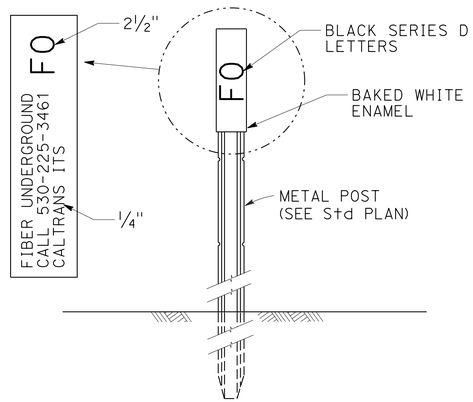

NOTE: MARKERS SHALL COMPLY WITH TYPE L-2 AS SHOWN ON THE STANDARD PLAN SHEETS A73A AND A73B EXCEPT NO REFLECTORIZATION WILL BE REQUIRED.

OBJECT MARKER (TYPE FO)

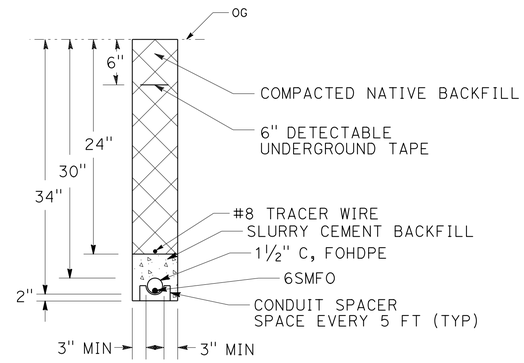

ONE 1 1/2"C, FOHDPE TRENCH DETAIL

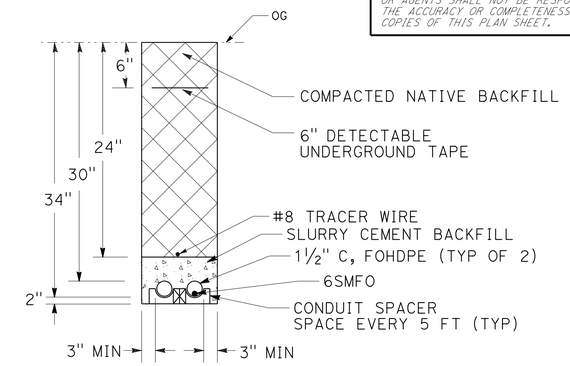

TWO 1 1/2"C, FOHDPE TRENCH DETAIL

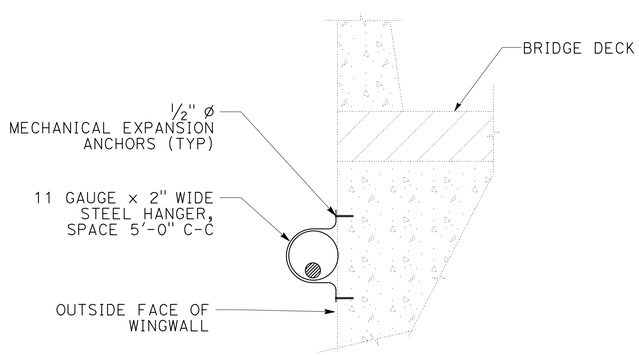

DETAIL A

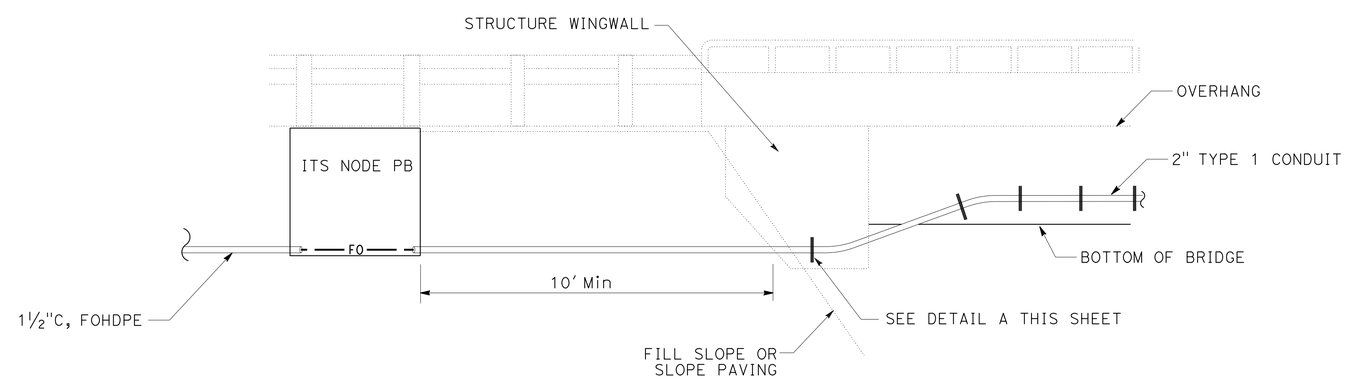

PROFILE
BRIDGE CROSSING

FIBER OPTIC SYSTEM DETAILS

NO SCALE

E-20

APPROVED FOR ELECTRICAL WORK ONLY

REVISED BY | DATE REVISED
LONNIE HOBBS | JEREMIAH PEARCE
CALCULATED-DESIGNED BY | CHECKED BY
FUNCTIONAL SUPERVISOR
IAN TURNBULL

STATE OF CALIFORNIA - DEPARTMENT OF TRANSPORTATION
Caltrans
ITS ENGINEERING AND SUPPORT

P:\proj1\02\4G820_plans\pse\24g820ua020.dgn

LAST REVISION 06-23-15 | DATE PLOTTED => 26-JUN-2015 | TIME PLOTTED => 09:52

Dist	COUNTY	ROUTE	POST MILES TOTAL PROJECT	SHEET No.	TOTAL SHEETS
02	Sis	5	R10.7/R19.5	264	327

REGISTERED ELECTRICAL ENGINEER 06-23-15 DATE

PLANS APPROVAL DATE 06-23-15

REGISTERED PROFESSIONAL ENGINEER JEREMIAH PEARCE No. E19475 Exp. 6-30-17 CIVIL STATE OF CALIFORNIA

THE STATE OF CALIFORNIA OR ITS OFFICERS OR AGENTS SHALL NOT BE RESPONSIBLE FOR THE ACCURACY OR COMPLETENESS OF SCANNED COPIES OF THIS PLAN SHEET.

NOTE:

1. FOR ACCURATE RIGHT OF WAY AND ACCESS DATA, CONTACT RIGHT OF WAY ENGINEERING AT THE DISTRICT OFFICE.

NOTES (THIS SHEET):

1 EXISTING 2"C, REMOVE SENSOR CABLE, ADD 1 SLI.

2 INSTALL PAVEMENT SENSOR IN THE CENTER OF THE LANE, PER INFORMATION HANDOUT.

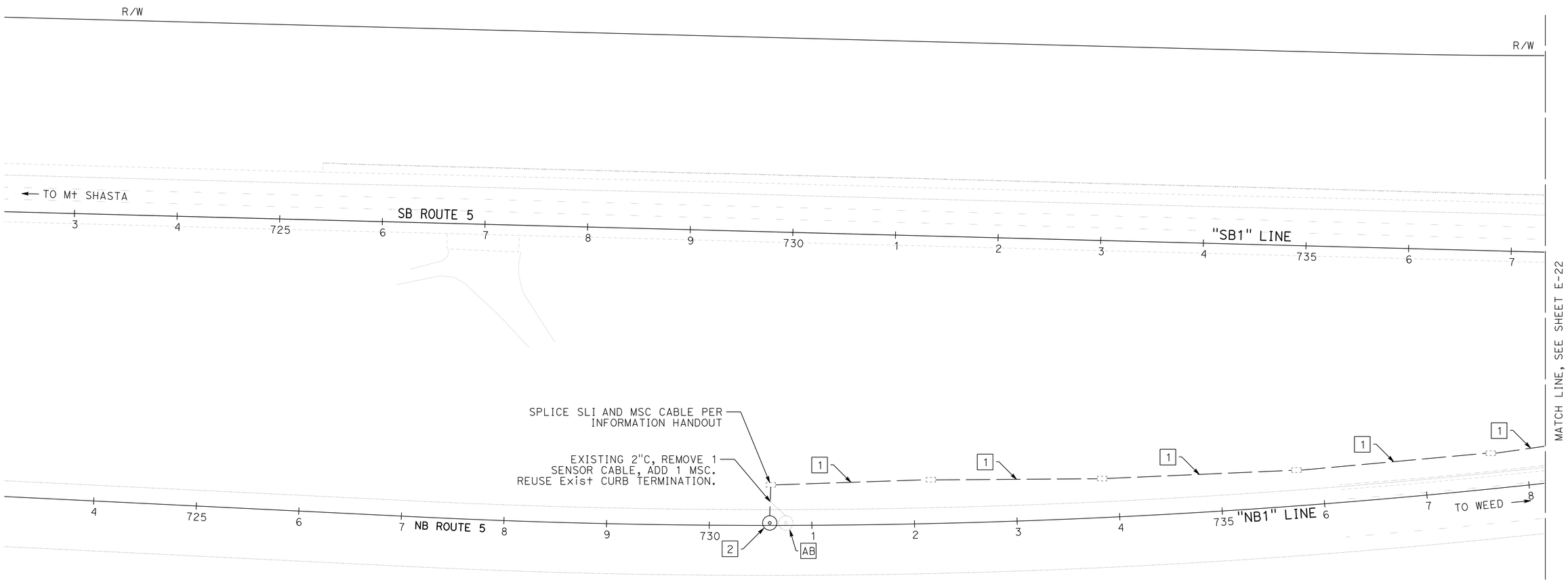

MODIFY ROADSIDE WEATHER INFORMATION SYSTEM

SCALE: 1" = 50'

E-21

APPROVED FOR ELECTRICAL WORK ONLY

REVISED BY	DATE REVISED
LONNIE HOBBS	JEREMIAH PEARCE
CALCULATED-DESIGNED BY	CHECKED BY
FUNCTIONAL SUPERVISOR	IAN TURNBULL

STATE OF CALIFORNIA - DEPARTMENT OF TRANSPORTATION

Caltrans® ITS ENGINEERING AND SUPPORT

P:\proj1\02\4G820_plans\pse\24g820ua021.dgn

LAST REVISION 06-23-15 | DATE PLOTTED => 26-JUN-2015 TIME PLOTTED => 09:52

Dist	COUNTY	ROUTE	POST MILES TOTAL PROJECT	SHEET No.	TOTAL SHEETS
02	Sis	5	R10.7/R19.5	265	327

06-23-15
REGISTERED ELECTRICAL ENGINEER DATE

06-23-15
PLANS APPROVAL DATE

REGISTERED PROFESSIONAL ENGINEER
JEREMIAH PEARCE
No. E19475
Exp. 6-30-17
CIVIL
STATE OF CALIFORNIA

THE STATE OF CALIFORNIA OR ITS OFFICERS OR AGENTS SHALL NOT BE RESPONSIBLE FOR THE ACCURACY OR COMPLETENESS OF SCANNED COPIES OF THIS PLAN SHEET.

NOTE:

1. FOR ACCURATE RIGHT OF WAY AND ACCESS DATA, CONTACT RIGHT OF WAY ENGINEERING AT THE DISTRICT OFFICE.

NOTES (THIS SHEET):

1 Exist 2"C, REMOVE SENSOR CABLE, ADD 1 SLI.

2 INSTALL PAVEMENT SENSOR IN THE CENTER OF THE LANE, PER INFORMATION HANDOUT.

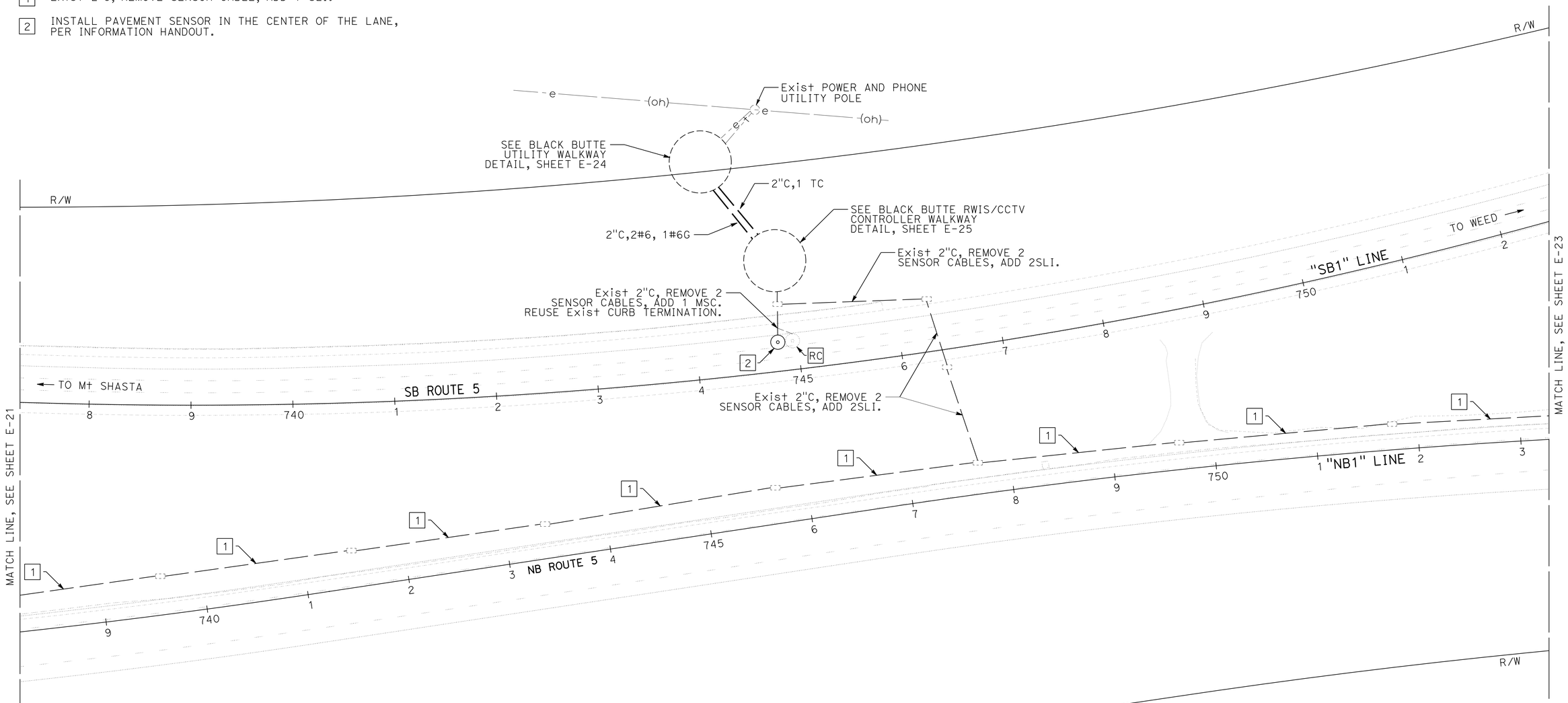

MODIFY ROADSIDE WEATHER INFORMATION SYSTEM

SCALE: 1" = 50'

E-22

APPROVED FOR ELECTRICAL WORK ONLY

REVISED BY | DATE REVISED
LONNIE HOBBS | JEREMIAH PEARCE
CALCULATED-DESIGNED BY | CHECKED BY
FUNCTIONAL SUPERVISOR
IAN TURNBULL

STATE OF CALIFORNIA - DEPARTMENT OF TRANSPORTATION
Caltrans
ITS ENGINEERING AND SUPPORT

P:\proj1\02\4G820_plans\pse\24g820ua022.dgn

LAST REVISION 06-23-15 | DATE PLOTTED => 26-JUN-2015 | TIME PLOTTED => 09:52

Dist	COUNTY	ROUTE	POST MILES TOTAL PROJECT	SHEET No.	TOTAL SHEETS
02	Sis	5	R10.7/R19.5	266	327

REGISTERED ELECTRICAL ENGINEER 06-23-15 DATE

PLANS APPROVAL DATE 06-23-15

REGISTERED PROFESSIONAL ENGINEER JEREMIAH PEARCE No. E19475 Exp. 6-30-17 CIVIL STATE OF CALIFORNIA

THE STATE OF CALIFORNIA OR ITS OFFICERS OR AGENTS SHALL NOT BE RESPONSIBLE FOR THE ACCURACY OR COMPLETENESS OF SCANNED COPIES OF THIS PLAN SHEET.

NOTE:

1. FOR ACCURATE RIGHT OF WAY AND ACCESS DATA, CONTACT RIGHT OF WAY ENGINEERING AT THE DISTRICT OFFICE.

NOTES (THIS SHEET):

1 Exist 2"C, REMOVE SENSOR CABLE, ADD 1 SLI.

2 INSTALL PAVEMENT SENSOR IN THE CENTER OF THE LANE, PER INFORMATION HANDOUT.

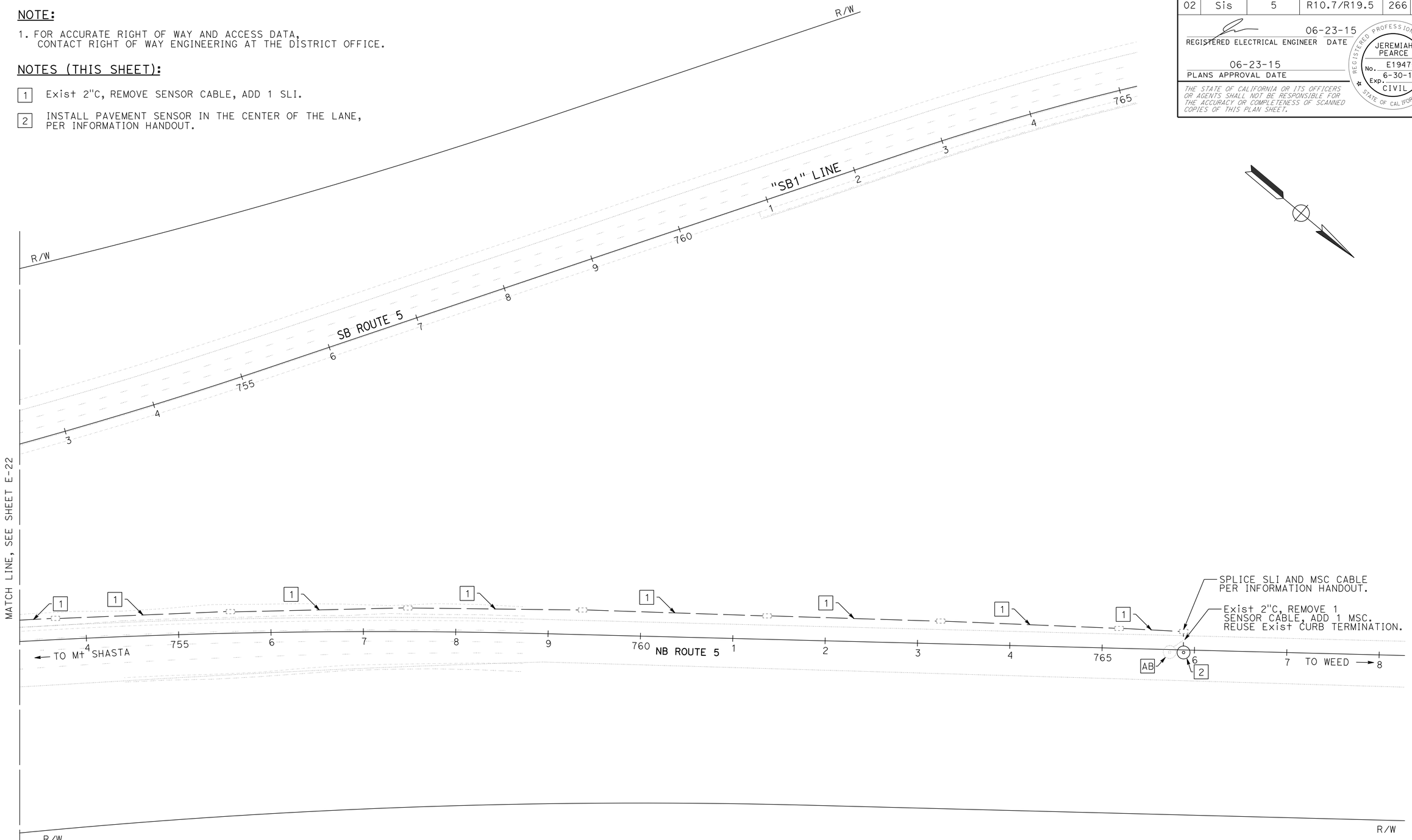

MODIFY ROADSIDE WEATHER INFORMATION SYSTEM

SCALE: 1" = 50'

E-23

APPROVED FOR ELECTRICAL WORK ONLY

STATE OF CALIFORNIA - DEPARTMENT OF TRANSPORTATION

Caltrans ITS ENGINEERING AND SUPPORT

FUNCTIONAL SUPERVISOR: IAN TURNBULL

CALCULATED-DESIGNED BY: LONNIE HOBBS

CHECKED BY: JEREMIAH PEARCE

REVISED BY / DATE REVISED

P:\proj1\02\40820_plans\pse\24g820ua023.dgn

LAST REVISION 06-23-15 | DATE PLOTTED => 26-JUN-2015 | TIME PLOTTED => 09:52

Dist	COUNTY	ROUTE	POST MILES TOTAL PROJECT	SHEET No.	TOTAL SHEETS
02	Sis	5	R10.7/R19.5	267	327

REGISTERED ELECTRICAL ENGINEER 06-23-15 DATE

PLANS APPROVAL DATE 06-23-15

REGISTERED PROFESSIONAL ENGINEER JEREMIAH PEARCE No. E19475 Exp. 6-30-17 CIVIL STATE OF CALIFORNIA

THE STATE OF CALIFORNIA OR ITS OFFICERS OR AGENTS SHALL NOT BE RESPONSIBLE FOR THE ACCURACY OR COMPLETENESS OF SCANNED COPIES OF THIS PLAN SHEET.

NOTE:

1. FOR ACCURATE RIGHT OF WAY AND ACCESS DATA, CONTACT RIGHT OF WAY ENGINEERING AT THE DISTRICT OFFICE.

NOTES (THIS SHEET):

1 NEATLY COIL 10 FEET OF TC CABLE IN BOTTOM OF TDC.

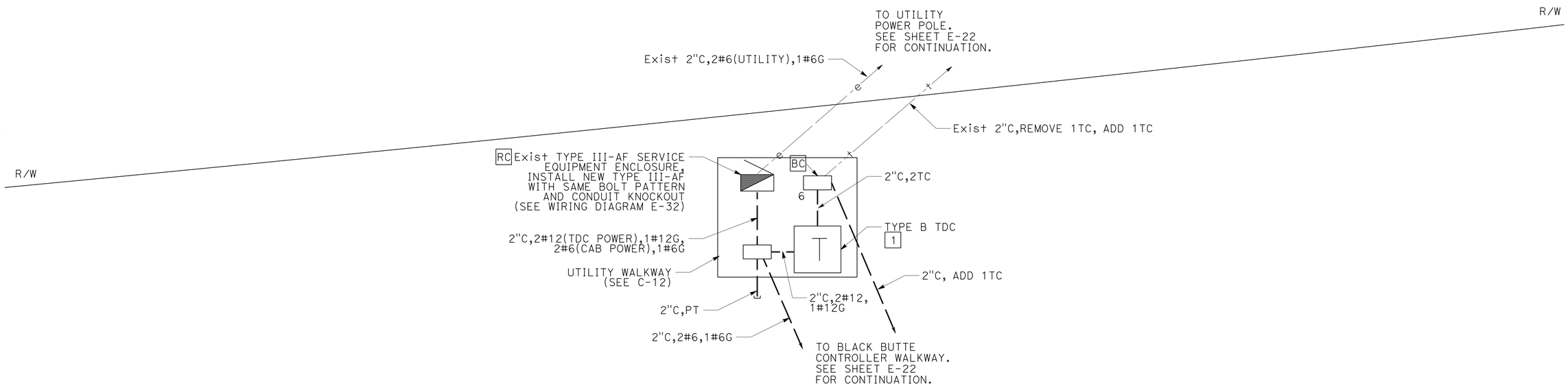

BLACK BUTTE UTILITY WALKWAY DETAIL

MODIFY ROADSIDE INFORMATION WEATHER SYSTEM DETAILS

NO SCALE

E-24

APPROVED FOR ELECTRICAL WORK ONLY

REVISED BY | DATE REVISED

LONNIE HOBBS | JEREMIAH PEARCE

CALCULATED-DESIGNED BY | CHECKED BY

FUNCTIONAL SUPERVISOR: IAN TURNBULL

STATE OF CALIFORNIA - DEPARTMENT OF TRANSPORTATION

Caltrans® ITS ENGINEERING AND SUPPORT

P:\proj1\02\46820_plans\pse\24g820ua024.dgn

LAST REVISION 06-23-15 | DATE PLOTTED => 26-JUN-2015 | TIME PLOTTED => 09:52

Dist	COUNTY	ROUTE	POST MILES TOTAL PROJECT	SHEET No.	TOTAL SHEETS
02	Sis	5	R10.7/R19.5	268	327

REGISTERED ELECTRICAL ENGINEER 06-23-15 DATE

PLANS APPROVAL DATE 06-23-15

REGISTERED PROFESSIONAL ENGINEER JEREMIAH PEARCE No. E19475 Exp. 6-30-17 CIVIL STATE OF CALIFORNIA

THE STATE OF CALIFORNIA OR ITS OFFICERS OR AGENTS SHALL NOT BE RESPONSIBLE FOR THE ACCURACY OR COMPLETENESS OF SCANNED COPIES OF THIS PLAN SHEET.

NOTE:

1. FOR FOHDPE TRENCH DETAILS SEE SHEET E-20.

NOTES (THIS SHEET):

1. INSTALL DEPARTMENT FURNISHED BBS CABINET, NEATLY COIL 10' OF CONDUCTORS IN BOTTOM OF CABINET.
2. INSTALL DEPARTMENT FURNISHED ITS NODE EQUPMENT CABINET, NEATLY COIL 10' OF CONDUCTORS, 50' OF 6SMFO, AND 10' OF DFCCTV IN BOTTOM OF CABINET.
3. 3"C, 2#6, 1#6 G (CAB POWER), 4#12 (BLACK AND WHITE) 1#12 G, 4#12 (BLUE AND WHITE)
4. 3"C, 2#12 (BLACK AND WHITE) 1#12 G, 2#12 (BLUE AND WHITE)
5. Exist 3"C, REMOVE SENSOR CABLES, ADD 2 SLI AND 2 MSC.

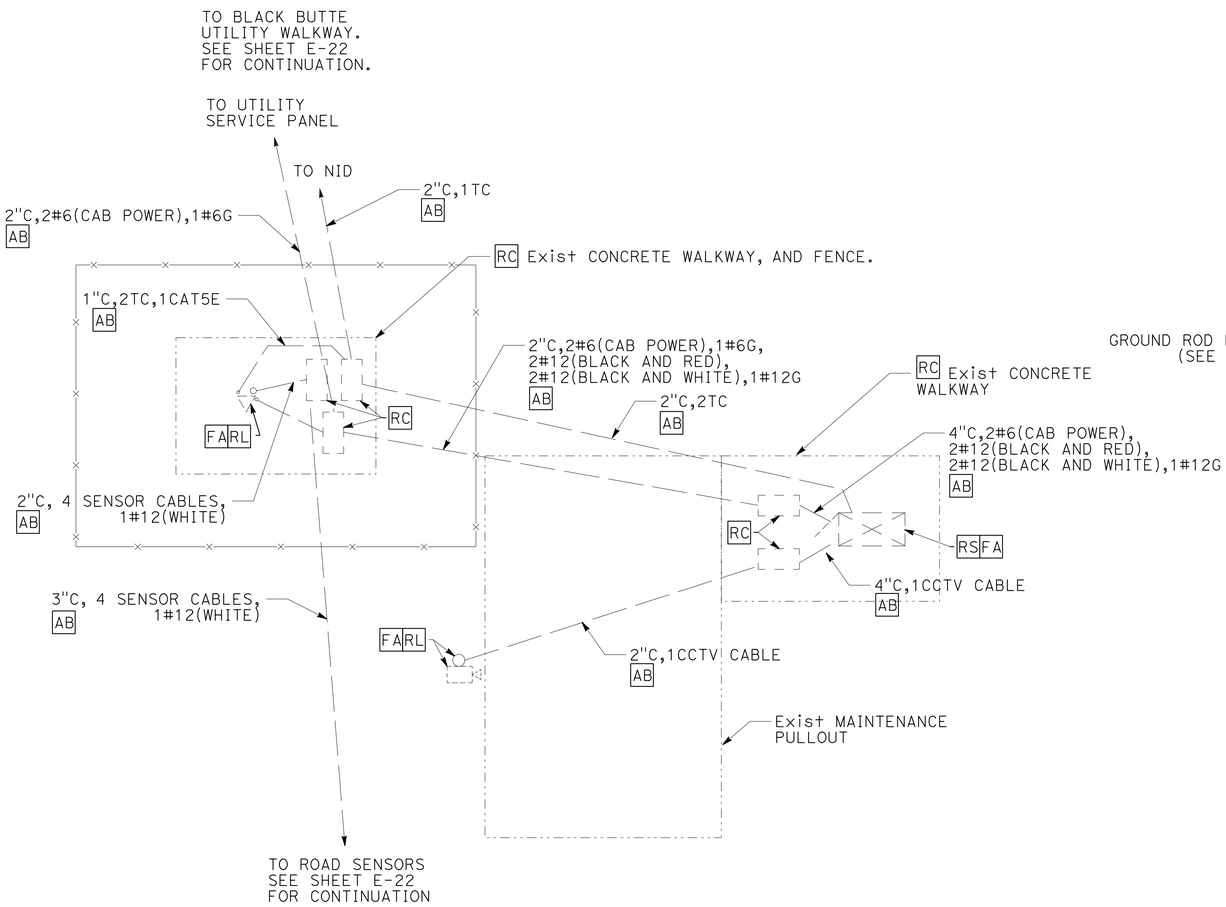

Exist BLACK BUTTE RWIS/CCTV CONTROLLER WALKWAY DETAIL

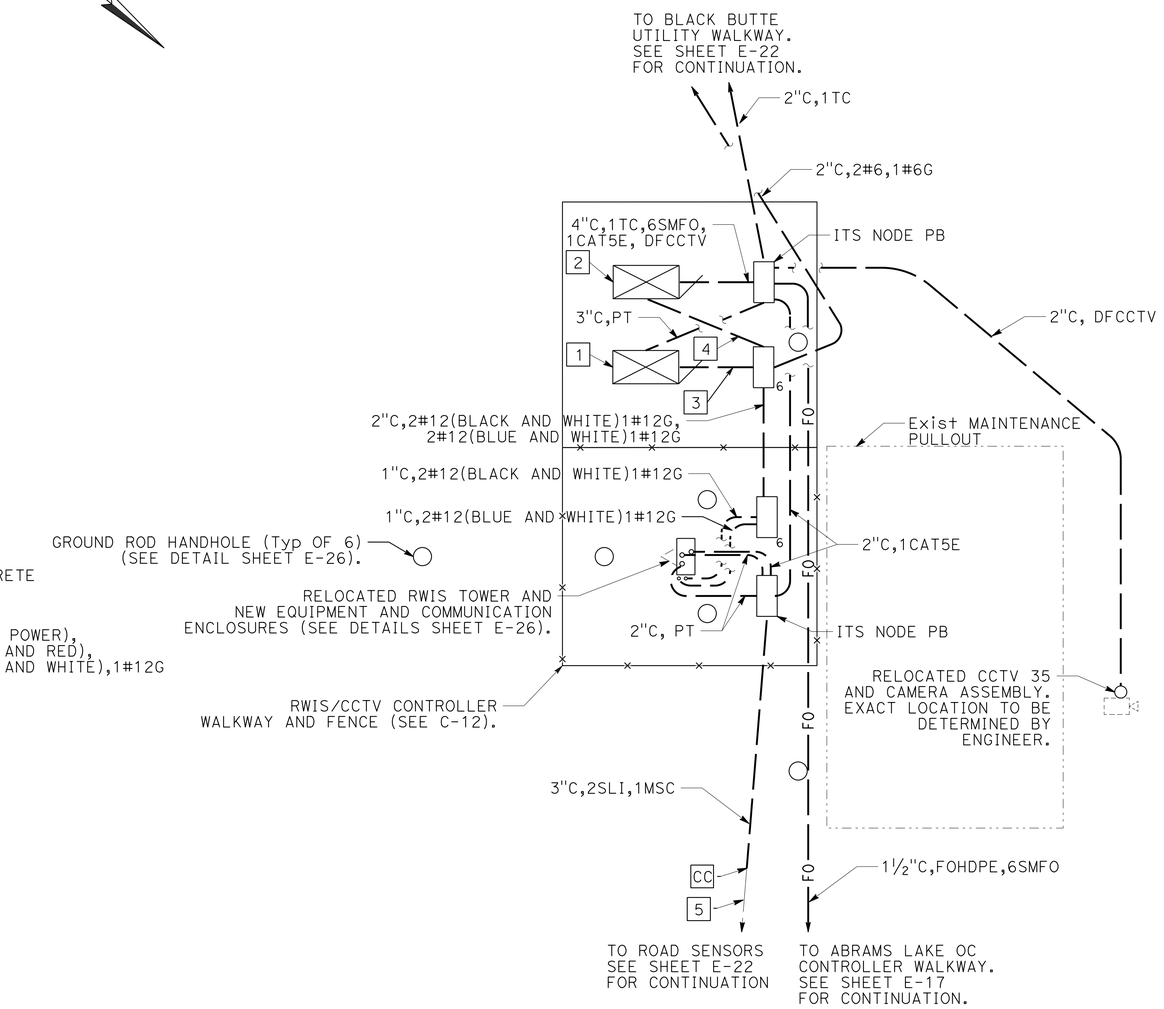

BLACK BUTTE RWIS/CCTV CONTROLLER WALKWAY DETAIL

MODIFY ROADSIDE INFORMATION WEATHER SYSTEM DETAILS

NO SCALE

E-25

APPROVED FOR ELECTRICAL WORK ONLY

STATE OF CALIFORNIA - DEPARTMENT OF TRANSPORTATION
Caltrans
ITS ENGINEERING AND SUPPORT

FUNCTIONAL SUPERVISOR: IAN TURNBULL
CALCULATED-DESIGNED BY: LONNIE HOBBS
CHECKED BY: JEREMIAH PEARCE
REVISED BY
DATE REVISED

P:\proj1\02\4G820_plans\pse\24g820ua025.dgn

LAST REVISION 06-23-15 | DATE PLOTTED => 26-JUN-2015 | TIME PLOTTED => 09:52

Dist	COUNTY	ROUTE	POST MILES TOTAL PROJECT	SHEET No.	TOTAL SHEETS
02	Sis	5	R10.7/R19.5	269	327

REGISTERED ELECTRICAL ENGINEER 06-23-15 DATE

PLANS APPROVAL DATE 06-23-15

REGISTERED PROFESSIONAL ENGINEER JEREMIAH PEARCE No. E19475 Exp. 6-30-17 CIVIL STATE OF CALIFORNIA

THE STATE OF CALIFORNIA OR ITS OFFICERS OR AGENTS SHALL NOT BE RESPONSIBLE FOR THE ACCURACY OR COMPLETENESS OF SCANNED COPIES OF THIS PLAN SHEET.

LEGEND (THIS SHEET):

1. 1"C, 1/0 BARE COPPER GROUND.
2. BURIED, 1/0 BARE COPPER GROUND, 36" DEEP.
3. 3' ALUMINUM MAST, 1.25" OUTSIDE DIAMETER 0.125" WALL THICKNESS.

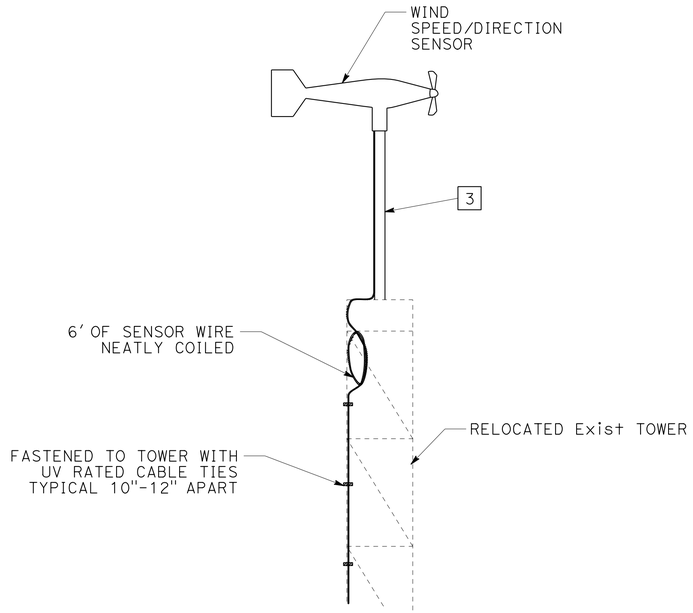

WIND SENSOR DETAIL

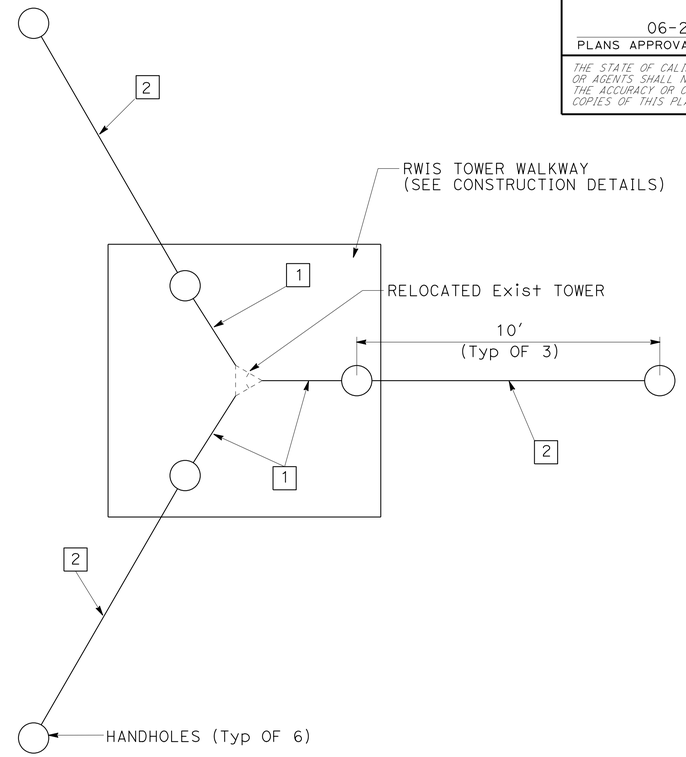

RWIS TOWER WALKWAY GROUNDING DETAIL

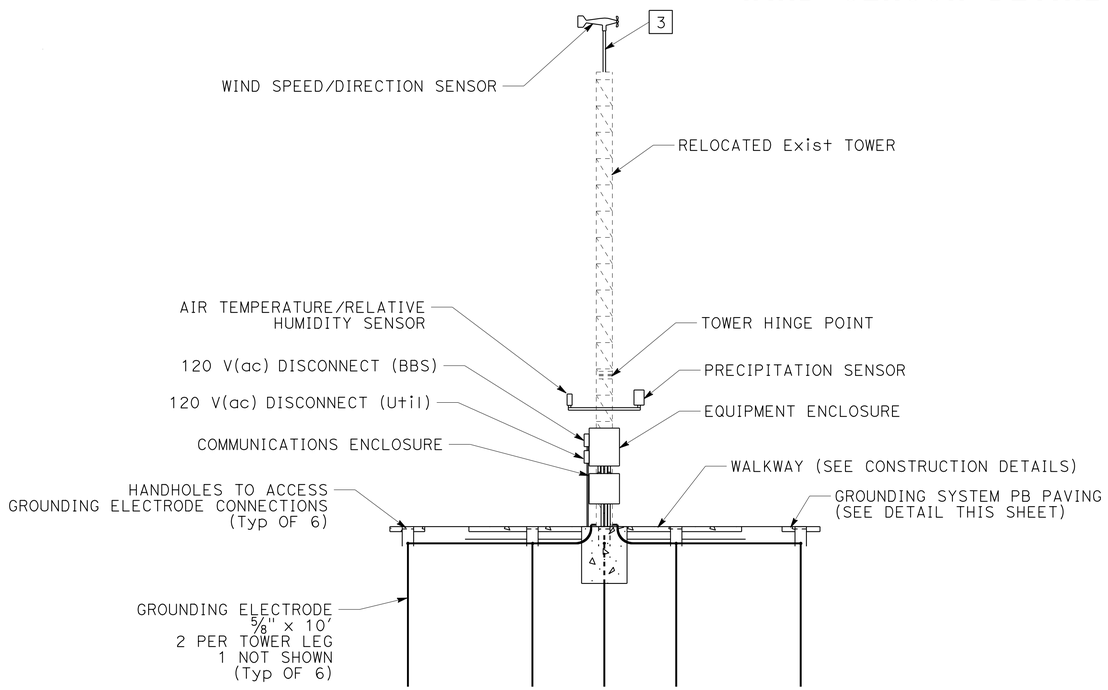

RWIS TOWER AND SENSOR CONFIGURATION

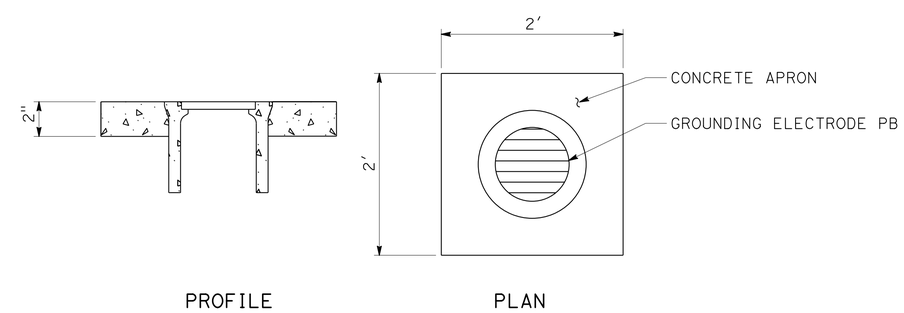

GROUNDING SYSTEM PB PAVING

MODIFY ROADSIDE WEATHER INFORMATION SYSTEM (DETAILS)

NO SCALE

E-26

REVISED BY	DATE REVISED

LONNIE HOBBS — JEREMIAH PEARCE

CALCULATED-DESIGNED BY — CHECKED BY

FUNCTIONAL SUPERVISOR: IAN TURNBULL

STATE OF CALIFORNIA - DEPARTMENT OF TRANSPORTATION

Caltrans® ITS ENGINEERING AND SUPPORT

P:\proj1\02\4G820_plans\pse\24g820ua026.dgn

LAST REVISION 06-23-15 | DATE PLOTTED => 26-JUN-2015 | TIME PLOTTED => 09:52

Dist	COUNTY	ROUTE	POST MILES TOTAL PROJECT	SHEET No.	TOTAL SHEETS
02	Sis	5	R10.7/R19.5	270	327

06-23-15
REGISTERED ELECTRICAL ENGINEER DATE

06-23-15
PLANS APPROVAL DATE

REGISTERED PROFESSIONAL ENGINEER
JEREMIAH PEARCE
No. E19475
Exp. 6-30-17
CIVIL
STATE OF CALIFORNIA

THE STATE OF CALIFORNIA OR ITS OFFICERS OR AGENTS SHALL NOT BE RESPONSIBLE FOR THE ACCURACY OR COMPLETENESS OF SCANNED COPIES OF THIS PLAN SHEET.

NOTES (THIS SHEET):

1. BURIED, 1/0 BARE COPPER GROUND 36" DEEP
2. 1"C, 1/0 BARE COPPER GROUND
3. 2"C, PT, EQUIPMENT ENCLOSURE TO COMMUNICATION ENCLOSURE
4. 2"C, PT
5. 2"C, 1 CAT5E
6. 1"C, 2#12, 1#12G (UTILITY)
7. 1"C, 2#12, 1#12G (BBS)

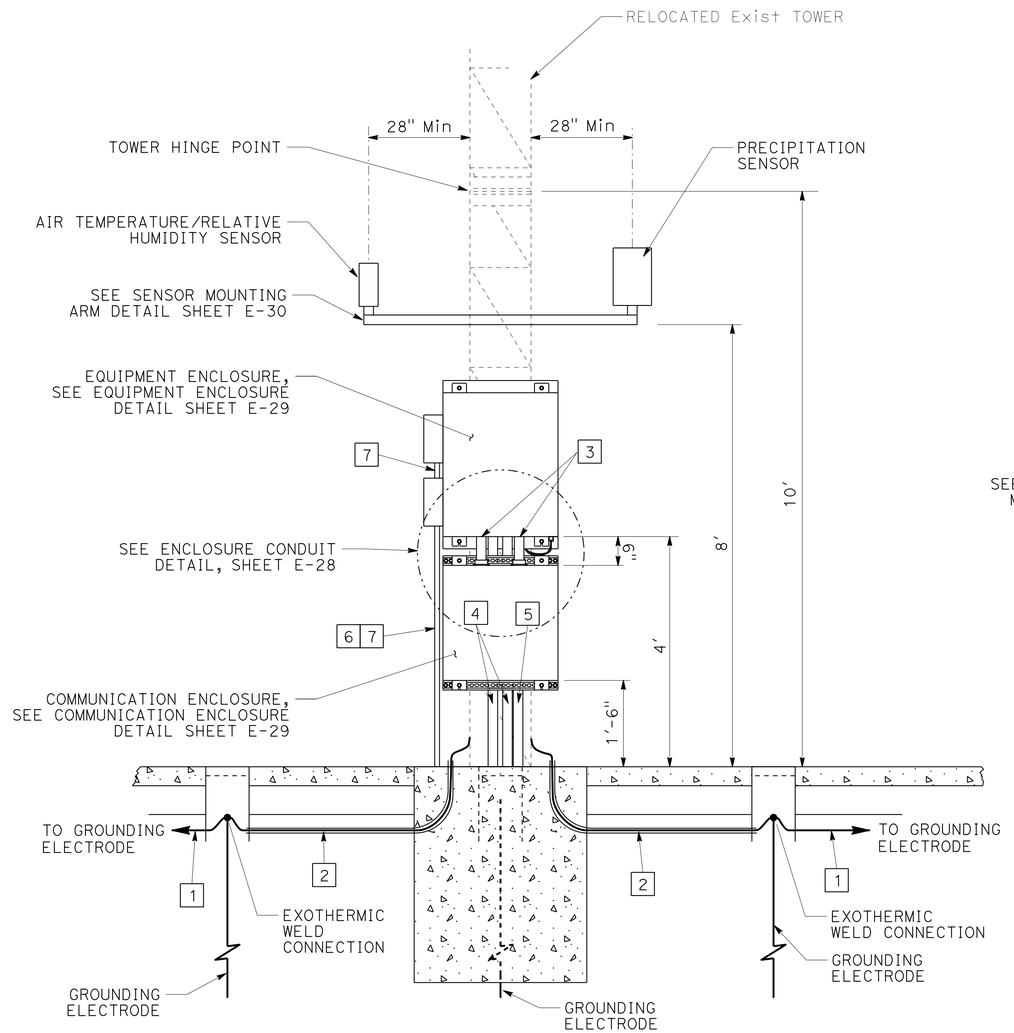

FRONT
RWIS TOWER

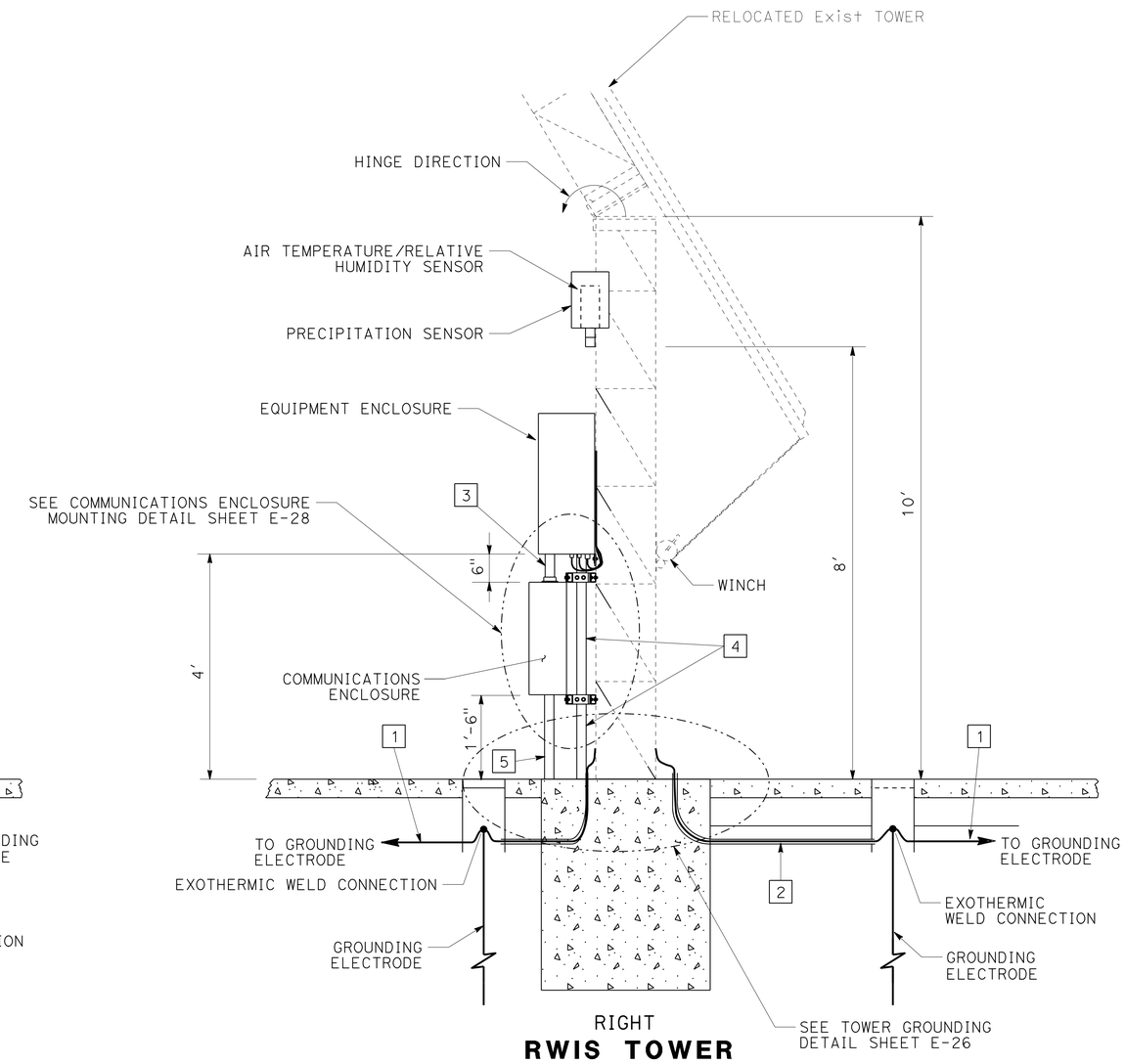

RIGHT
RWIS TOWER

MODIFY ROADSIDE WEATHER INFORMATION SYSTEM
(DETAILS)
NO SCALE

E-27

REVISED BY	DATE REVISED

LONNIE HOBBS — JEREMIAH PEARCE
CALCULATED-DESIGNED BY — CHECKED BY
FUNCTIONAL SUPERVISOR — IAN TURNBULL

STATE OF CALIFORNIA - DEPARTMENT OF TRANSPORTATION
Caltrans
ITS ENGINEERING AND SUPPORT

P:\proj1\02\4g820_plans\pse\24g820ua027.dgn

LAST REVISION 06-23-15 | DATE PLOTTED => 26-JUN-2015 | TIME PLOTTED => 09:52

Dist	COUNTY	ROUTE	POST MILES TOTAL PROJECT	SHEET No.	TOTAL SHEETS
02	Sis	5	R10.7/R19.5	271	327

REGISTERED ELECTRICAL ENGINEER 06-23-15 DATE

PLANS APPROVAL DATE 06-23-15

REGISTERED PROFESSIONAL ENGINEER JEREMIAH PEARCE No. E19475 Exp. 6-30-17 CIVIL STATE OF CALIFORNIA

THE STATE OF CALIFORNIA OR ITS OFFICERS OR AGENTS SHALL NOT BE RESPONSIBLE FOR THE ACCURACY OR COMPLETENESS OF SCANNED COPIES OF THIS PLAN SHEET.

NOTES (THIS SHEET):

1. 1/0 BARE COPPER GROUND ELECTRICALLY AND MECHANICALLY BONDED TO TOWER AT NEAREST TOWER BOLT (Typ OF 3).
2. BURIED, 1/0 BARE COPPER GROUND, 36" DEEP (Typ OF 3).
3. 1"C, 1/0 BARE COPPER GROUND (Typ OF 3).
4. 2"C, PT, EQUIPMENT ENCLOSURE TO COMMUNICATIONS ENCLOSURE.
5. 2"C, PT.
6. 2"C, 1-6SMFO.
7. 1"C, 2#12, 1#12G (UTILITY).
8. 1"C, 2#12, 1#12G (BBS).
9. 2" HUB. WATER TIGHT FITTING.
10. 1⅝" STRUT CHANNEL.
11. CHANNEL ANGLE PLATE 90° STEEL, ELECTROGALVANIZED.
12. LIQUID TIGHT CORD CONNECTOR.
13. 24" x 4" x ¼" 6061 ALUMINUM ALLOY PLATE BOLTED TO THE TOWER FOR MOUNTING EQUIPMENT ENCLOSURE (TOP AND BOTTOM) TO TOWER.

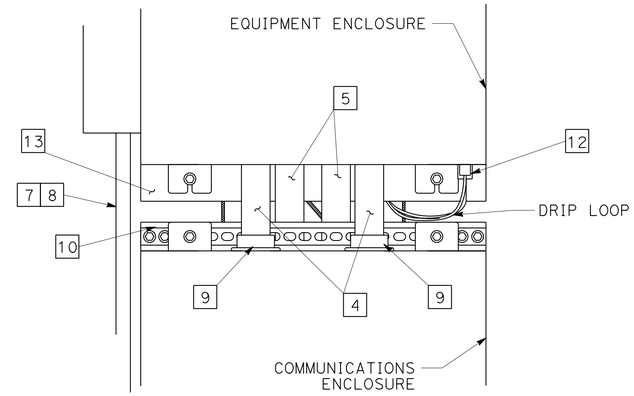

ENCLOSURE CONDUIT DETAIL

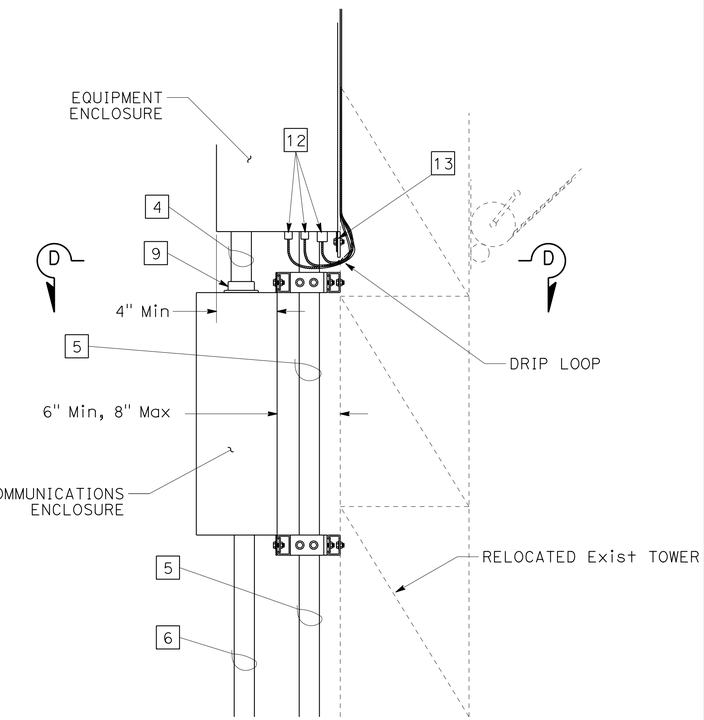

COMMUNICATIONS ENCLOSURE MOUNTING DETAIL

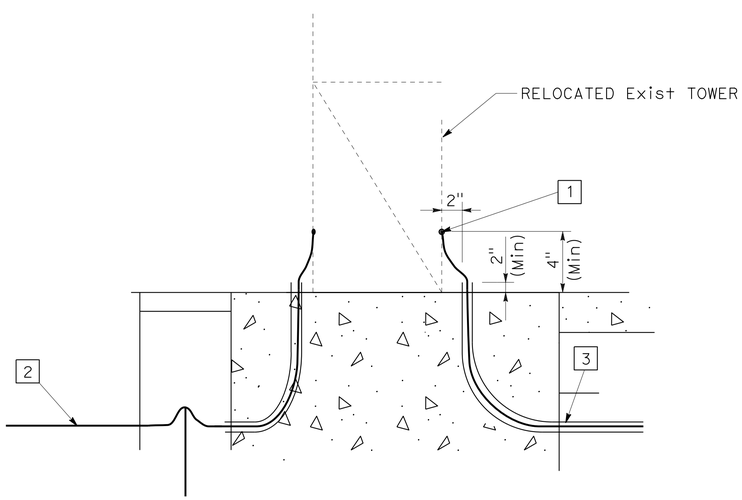

TOWER GROUNDING DETAIL

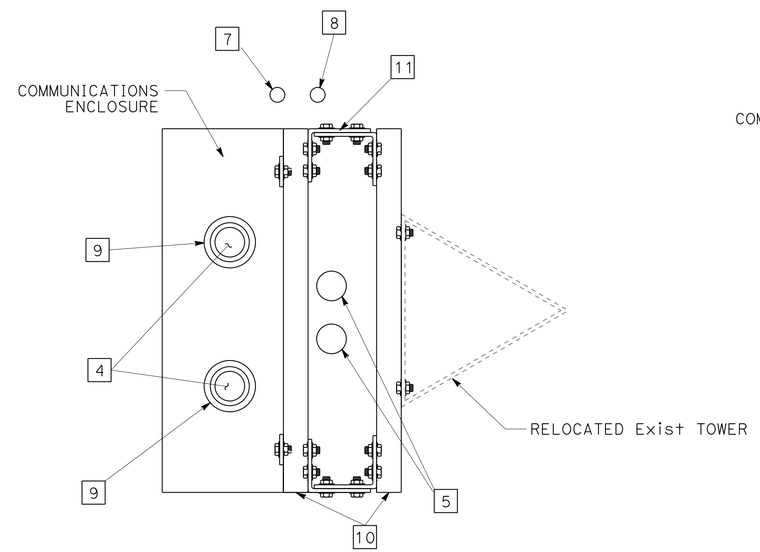

SECTION D-D

ALL HARDWARE IS STAINLESS STEEL UNLESS OTHERWISE NOTED

MODIFY ROADSIDE WEATHER INFORMATION SYSTEM (DETAILS)

NO SCALE

E-28

REVISED BY	DATE REVISED

CALCULATED-DESIGNED BY: LONNIE HOBBS
CHECKED BY: JEREMIAH PEARCE
FUNCTIONAL SUPERVISOR: IAN TURNBULL

STATE OF CALIFORNIA - DEPARTMENT OF TRANSPORTATION
Caltrans
ITS ENGINEERING AND SUPPORT

P:\proj1\02\4G820_plans\pse\24g820ua028.dgn

LAST REVISION 06-23-15 | DATE PLOTTED => 26-JUN-2015 | TIME PLOTTED => 09:52

Dist	COUNTY	ROUTE	POST MILES TOTAL PROJECT	SHEET No.	TOTAL SHEETS
02	Sis	5	R10.7/R19.5	272	327

REGISTERED ELECTRICAL ENGINEER 06-23-15 DATE

PLANS APPROVAL DATE 06-23-15

REGISTERED PROFESSIONAL ENGINEER JEREMIAH PEARCE No. E19475 Exp. 6-30-17 CIVIL STATE OF CALIFORNIA

THE STATE OF CALIFORNIA OR ITS OFFICERS OR AGENTS SHALL NOT BE RESPONSIBLE FOR THE ACCURACY OR COMPLETENESS OF SCANNED COPIES OF THIS PLAN SHEET.

NOTES (THIS SHEET):

1. 1" HUB WATER TIGHT FITTING.
2. 1" CONDUIT BODY (TYPE LB) WITH COVER.
3. INSTALL METAL DUPLEX COVER.
4. 1"C, 2#12, 1#12G (BBS).
5. 1"C, 2#12, 1#12G (UTILITY).

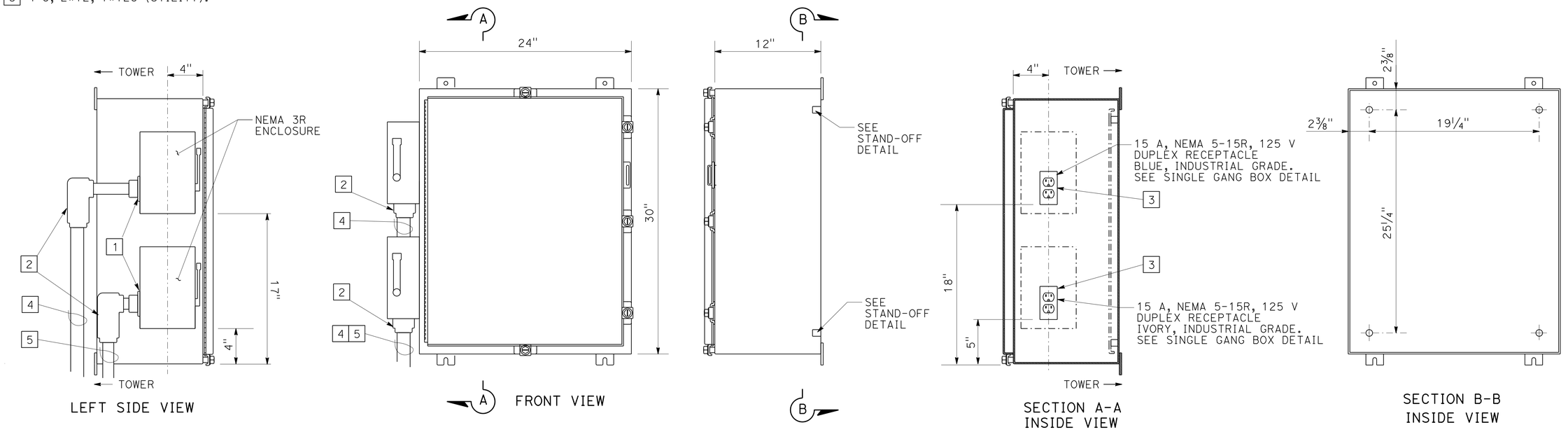

EQUIPMENT ENCLOSURE DETAIL

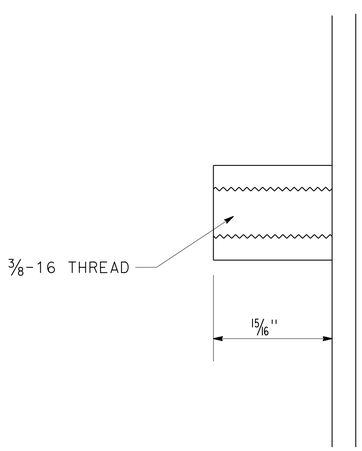

STAND-OFF DETAIL

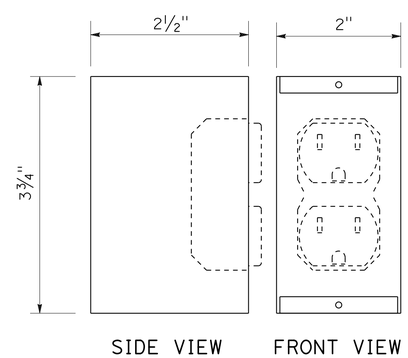

SINGLE GANG BOX DETAIL

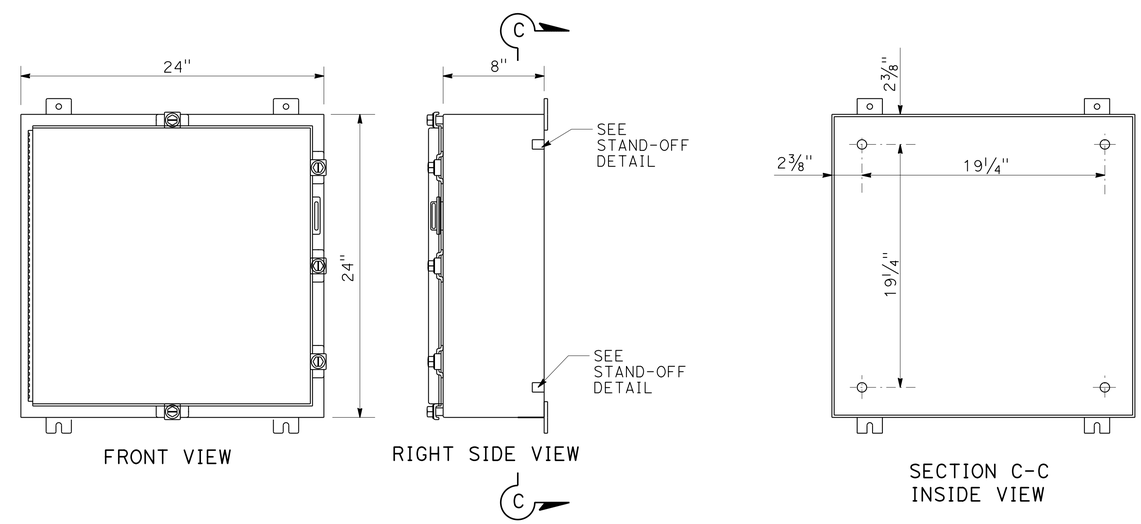

COMMUNICATION ENCLOSURE DETAIL

MODIFY ROADSIDE WEATHER INFORMATION SYSTEM (DETAILS)

NO SCALE

E-29

STATE OF CALIFORNIA - DEPARTMENT OF TRANSPORTATION
ITS ENGINEERING AND SUPPORT
Caltrans

FUNCTIONAL SUPERVISOR: IAN TURNBULL
CALCULATED-DESIGNED BY: LONNIE HOBBS
CHECKED BY: JEREMIAH PEARCE
REVISED BY
DATE REVISED

P:\proj1\02\40820_plans\pse\24g820ua029.dgn

LAST REVISION 06-23-15 | DATE PLOTTED => 26-JUN-2015 | TIME PLOTTED => 09:52

Dist	COUNTY	ROUTE	POST MILES TOTAL PROJECT	SHEET No.	TOTAL SHEETS
02	Sis	5	R10.7/R19.5	273	327

REGISTERED ELECTRICAL ENGINEER 06-23-15 DATE

PLANS APPROVAL DATE 06-23-15

REGISTERED PROFESSIONAL ENGINEER JEREMIAH PEARCE No. E19475 Exp. 6-30-17 CIVIL STATE OF CALIFORNIA

THE STATE OF CALIFORNIA OR ITS OFFICERS OR AGENTS SHALL NOT BE RESPONSIBLE FOR THE ACCURACY OR COMPLETENESS OF SCANNED COPIES OF THIS PLAN SHEET.

NOTES (THIS SHEET):

1. ALL DIMENSIONS TO BE ± 0.05".

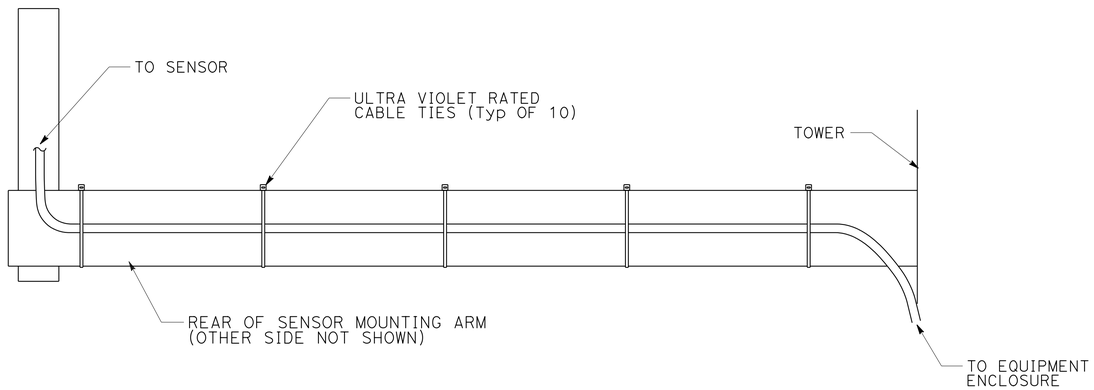

SENSOR MOUNTING ARM CABLE ATTACHMENT DETAIL

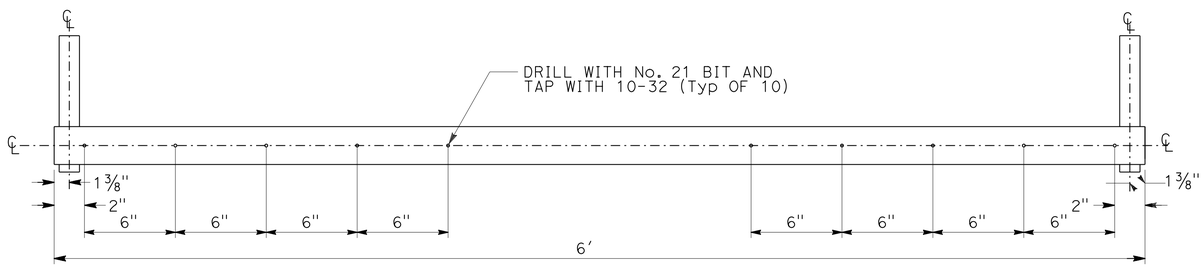

REAR SIDE VIEW

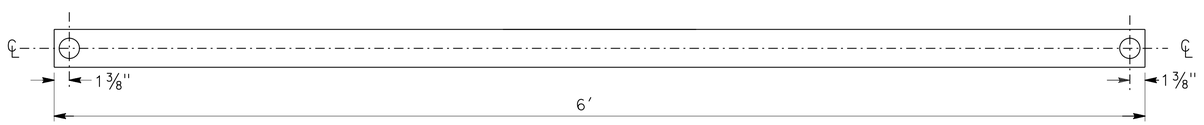

TOP VIEW

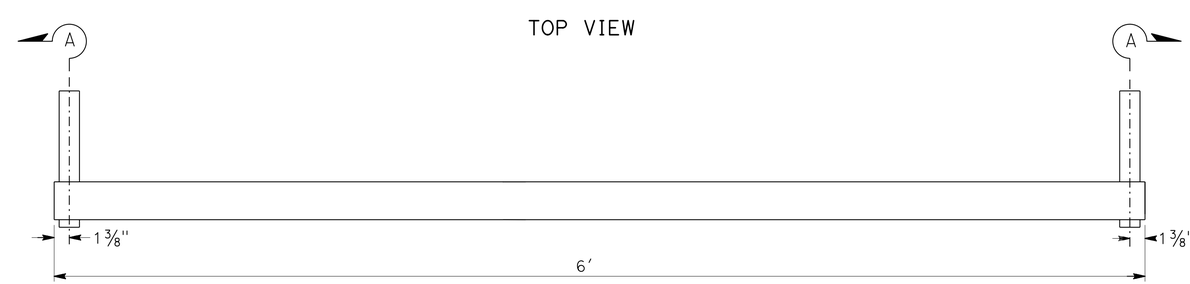

FRONT SIDE VIEW

SENSOR MOUNTING ARM DETAIL

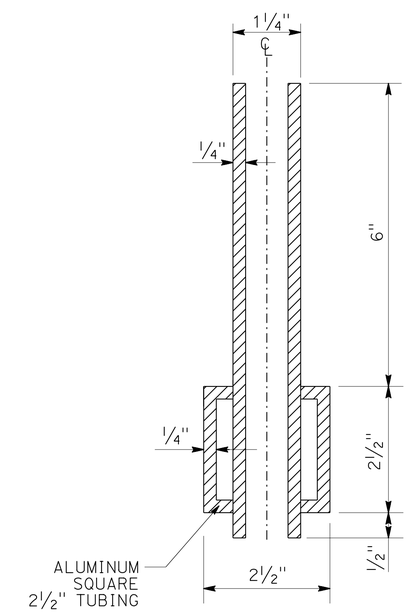

SECTION A-A

MODIFY ROADSIDE WEATHER INFORMATION SYSTEM (DETAILS)

NO SCALE

E-30

REVISED BY	DATE REVISED
LONNIE HOBBS	

CALCULATED-DESIGNED BY: JEREMIAH PEARCE
CHECKED BY:

FUNCTIONAL SUPERVISOR: IAN TURNBULL

STATE OF CALIFORNIA - DEPARTMENT OF TRANSPORTATION
Caltrans
ITS ENGINEERING AND SUPPORT

P:\proj1\02\4G820_plans\pse\24g820ua030.dgn

LAST REVISION 06-23-15 | DATE PLOTTED => 26-JUN-2015 | TIME PLOTTED => 09:52

Dist	COUNTY	ROUTE	POST MILES TOTAL PROJECT	SHEET No.	TOTAL SHEETS
02	Sis	5	R10.7/R19.5	274	327

06-23-15
REGISTERED ELECTRICAL ENGINEER DATE

06-23-15
PLANS APPROVAL DATE

REGISTERED PROFESSIONAL ENGINEER
JEREMIAH PEARCE
No. E19475
Exp. 6-30-17
CIVIL
STATE OF CALIFORNIA

THE STATE OF CALIFORNIA OR ITS OFFICERS OR AGENTS SHALL NOT BE RESPONSIBLE FOR THE ACCURACY OR COMPLETENESS OF SCANNED COPIES OF THIS PLAN SHEET.

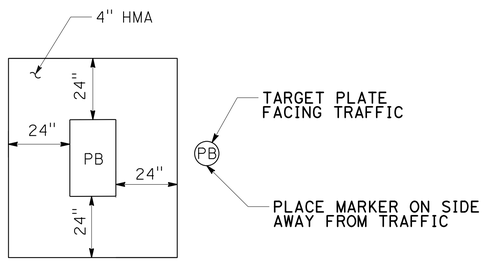

PULL BOX PAVING

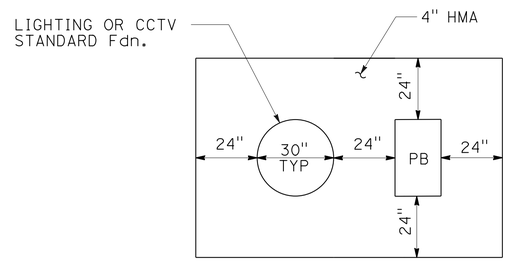

NOTE: APPLIES TO ALL INSTALLATIONS IN UNPAVED AREAS

PULL BOX AND LIGHT/CCTV STANDARD PAVING

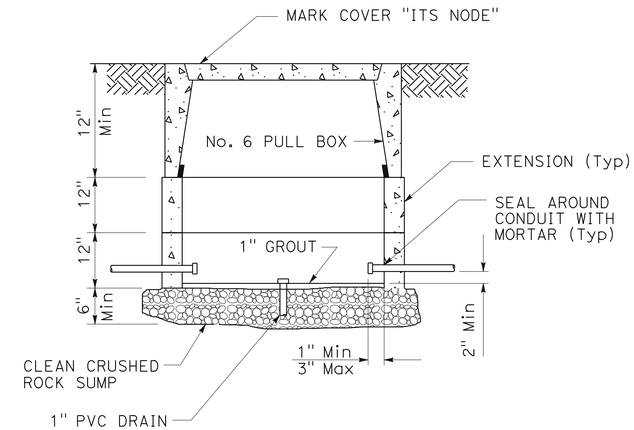

NOTE: SEE STD. PLN. ES-8B FOR TRAFFIC RATED PULL BOX DETAILS.

ITS NODE PULL BOX

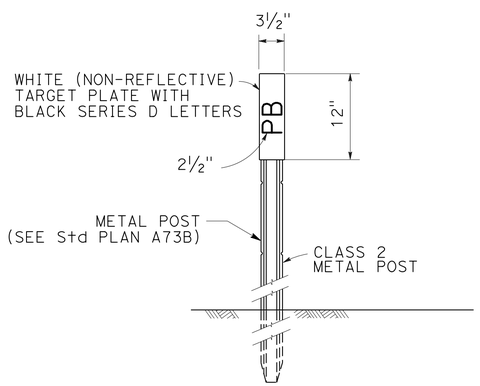

NOTE: PLACE MARKER 2" OUTSIDE PULL BOX PAVING ON SIDE FACING TRAFFIC. SEE PULL BOX PAVING DETAIL. INSTALL SNOW POLE BRACKET.

OBJECT MARKER (TYPE PB)

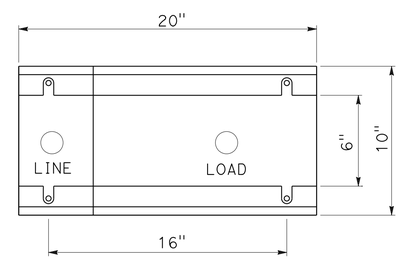

BASE DETAIL FOR TYPE III-AF SERVICE EQUIPMENT ENCLOSURE (20" WIDE)

ELECTRICAL DETAILS

NO SCALE

E-31

STATE OF CALIFORNIA - DEPARTMENT OF TRANSPORTATION
Caltrans
ITS ENGINEERING AND SUPPORT

FUNCTIONAL SUPERVISOR: IAN TURNBULL
CALCULATED-DESIGNED BY: LONNIE HOBBS
CHECKED BY: JEREMIAH PEARCE
REVISED BY
DATE REVISED

P:\proj1\02\4G820_plans\pse\24g820ua031.dgn

LAST REVISION 06-23-15
DATE PLOTTED => 26-JUN-2015
TIME PLOTTED => 09:52

Dist	COUNTY	ROUTE	POST MILES TOTAL PROJECT	SHEET No.	TOTAL SHEETS
02	Sis	5	R10.7/R19.5	275	327

REGISTERED ELECTRICAL ENGINEER 06-23-15 DATE

PLANS APPROVAL DATE 06-23-15

REGISTERED PROFESSIONAL ENGINEER JEREMIAH PEARCE No. E19475 Exp. 6-30-17 CIVIL STATE OF CALIFORNIA

THE STATE OF CALIFORNIA OR ITS OFFICERS OR AGENTS SHALL NOT BE RESPONSIBLE FOR THE ACCURACY OR COMPLETENESS OF SCANNED COPIES OF THIS PLAN SHEET.

NOTES (THIS SHEET):

1. SEE RSP ES-2D FOR ADDITIONAL INFORMATION.

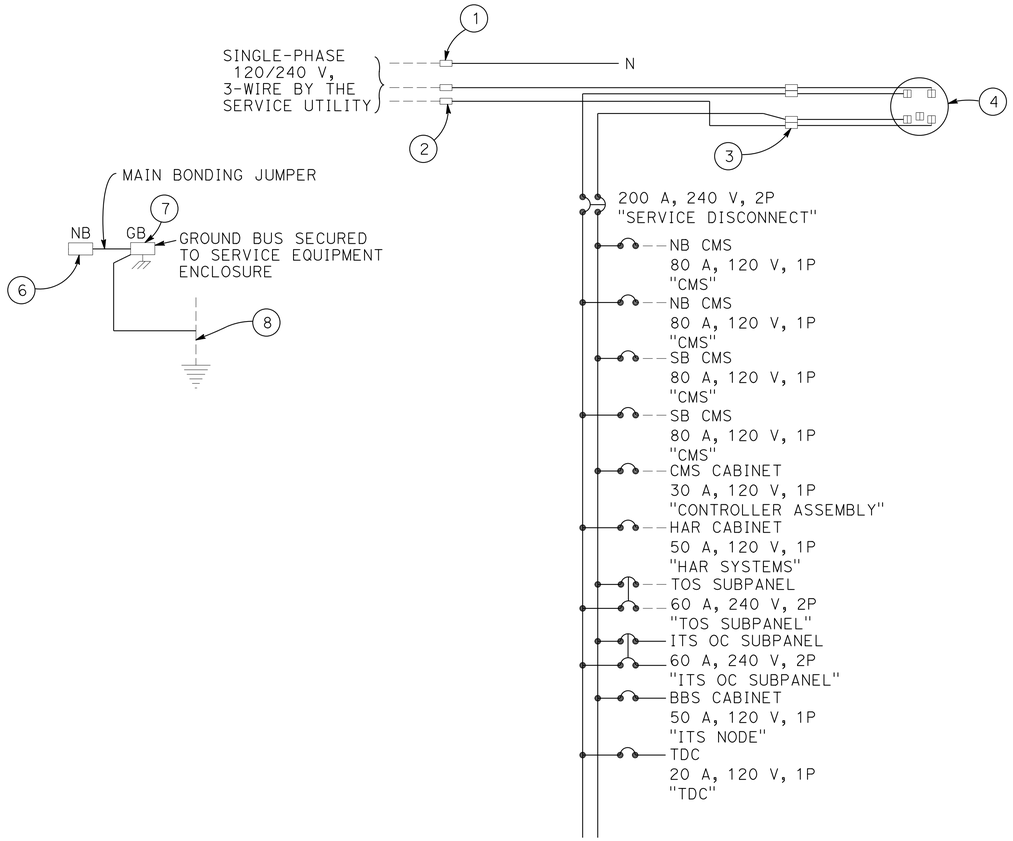

Exist ABRAMS LAKE HAR SERVICE EQUIPMENT ENCLOSURE 120/240 V SERVICE

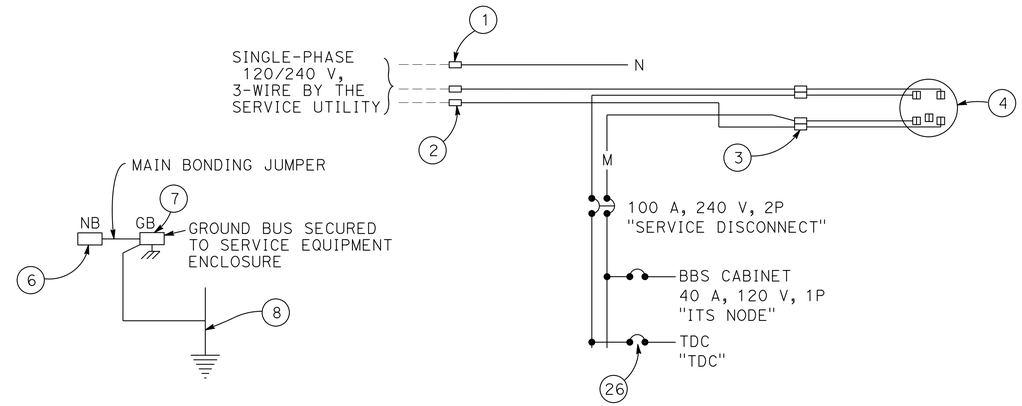

BLACK BUTTE SERVICE EQUIPMENT ENCLOSURE 120/240 V SERVICE

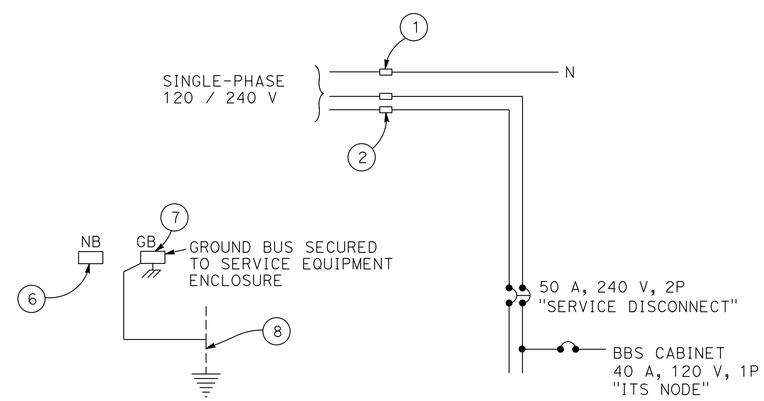

ABRAMS LAKE OC ITS SUBPANEL

WIRING DIAGRAMS

E-32

REVISED BY | DATE REVISED
LONNIE HOBBS | JEREMIAH PEARCE
CALCULATED-DESIGNED BY | CHECKED BY
FUNCTIONAL SUPERVISOR
IAN TURNBULL

STATE OF CALIFORNIA - DEPARTMENT OF TRANSPORTATION
Caltrans
ITS ENGINEERING AND SUPPORT

P:\proj1\02\40820_plans\pse\24g820ua032.dgn

LAST REVISION 06-23-15 | DATE PLOTTED => 26-JUN-2015 | TIME PLOTTED => 09:52

Dist	COUNTY	ROUTE	POST MILES TOTAL PROJECT	SHEET No.	TOTAL SHEETS
02	Sis	5	R10.7/R19.5	276	327

REGISTERED ELECTRICAL ENGINEER 06-23-15 DATE

06-23-15
PLANS APPROVAL DATE

REGISTERED PROFESSIONAL ENGINEER JEREMIAH PEARCE No. E19475 Exp. 6-30-17 CIVIL STATE OF CALIFORNIA

THE STATE OF CALIFORNIA OR ITS OFFICERS OR AGENTS SHALL NOT BE RESPONSIBLE FOR THE ACCURACY OR COMPLETENESS OF SCANNED COPIES OF THIS PLAN SHEET.

NOTES (THIS SHEET):

1. ITEMS SHOWN IN THESE TABLES ARE NOT A SEPARATE PAY ITEM, FOR INFORMATION ONLY

MODIFY LIGHTING

SHEET No.	LED LUMINAIRE - ROADWAY 1	LED LUMINAIRE - ROADWAY 2	ELECTROLIER (TYPE 15)	ELECTROLIER (TYPE 30)	ELECTROLIER (TYPE 32)	REMOVE Exist LUMINAIRE	1½" C (TYPE 3)	1½" C (TYPE 1)	No. 6 CONDUCTOR	No. 6 GROUND	No. 4 CONDUCTOR	No. 4 GROUND	#5 TRAFFIC PULL BOX	PULL BOX PAVING	TRENCH AND BACKFILL	DETECTABLE WARNING TAPE
	EA	EA	EA	EA	EA	EA	LF	EA	LF	LF	LF	LF	EA	EA	LF	LF
E-1	2															
E-2	1															
E-3	2	3														
E-4	3	3														
E-5		1		2		2	1320	45	3500	1750			7	4	1320	1320
E-6	5		1				400		800	400			2	2	400	400
E-7	4	3														
E-8	9															
E-9	7															
E-10	1	1			1		380	70			1200	600	2		380	380
E-11	9															

MODIFY TRAFFIC COUNT STATION

SHEET No.	TYPE A LOOP
	EA
E-12	7
E-13	6

FIBER OPTIC SYSTEM

SHEET No.	1½" FOHDPE CONDUIT	1½" TYPE 1 CONDUIT	2" TYPE 1 CONDUIT	3" TYPE 1 CONDUIT	4" TYPE 1 CONDUIT	#5 PULL BOX	#6 PULL BOX	#6 ITS NODE PULL BOX	#6 ITS NODE TRAFFIC PULL BOX	OBJECT MARKER (TYPE PB)	#12 CONDUCTOR	#8 CONDUCTOR	#2 CONDUCTOR	6SMFO CABLE	SERVICE EQUIPMENT ENCLOSURE
	LF	LF	LF	LF	LF	EA	EA	EA	EA	EA	LF	LF	LF	LF	EA
E-14	3,200		500			2		6	2	4			950	2,000	
E-15	3,000								3	3				1,500	
E-16	3,000								2	2				1,500	
E-17	1,800							1	2	2				900	
E-18	20		30	30	10		1	1			300	150		100	
E-19	80	10	70	60	20	1	2	2			300	300	50	240	1

MODIFY ROADSIDE WEATHER INFORMATION SYSTEM

SHEET No.	1½" FOHDPE CONDUIT	2" TYPE 3 CONDUIT	2" TYPE 1 CONDUIT	3" TYPE 1 CONDUIT	4" TYPE 1 CONDUIT	#5 PULL BOX	#6 PULL BOX	#6 ITS NODE PULL BOX	SENSOR LEAD-IN CABLE	#12 CONDUCTOR	#8 CONDUCTOR	#6 CONDUCTOR	TELEPHONE CABLE	CAT5E UNDERGROUND CABLE	6SMFO CABLE
	LF	LF	LF	LF	LF	EA	EA	EA	LF	LF	LF	LF	LF	LF	LF
E-21									800						
E-22		120							3,100		60		60		
E-23									1,350						
E-24		60	20			1	1			20	90		20		
E-25	80		75	40	10	2	1	1	50	370		25	20	40	130

ELECTRICAL QUANTITIES

E-33

REVISED BY | DATE REVISED
LONNIE HOBBS | JEREMIAH PEARCE
CALCULATED-DESIGNED BY | CHECKED BY
FUNCTIONAL SUPERVISOR
IAN TURNBULL

Caltrans® STATE OF CALIFORNIA - DEPARTMENT OF TRANSPORTATION
ITS ENGINEERING AND SUPPORT

P:\proj1\02\4G820_plans\pse\24g820ua033.dgn

LAST REVISION 06-23-15 | DATE PLOTTED => 26-JUN-2015 | TIME PLOTTED => 09:52

M

Maint	MAINTENANCE
Max	MAXIMUM
MB	METAL BEAM
MBB	METAL BEAM BARRIER
MBGR	METAL BEAM GUARD RAILING
Med	MEDIAN
MGS	MIDWEST GUARDRAIL SYSTEM
MH	MANHOLE
Min	MINIMUM
Misc	MISCELLANEOUS
Misc I & S	MISCELLANEOUS IRON AND STEEL
Mkr	MARKER
Mod	MODIFIED, MODIFY
Mon	MONUMENT
MP	METAL PLATE
MPGR	METAL PLATE GUARD RAILING
MR	MOVEMENT RATING
MSE	MECHANICALLY STABILIZED EMBANKMENT
Mt	MOUNTAIN, MOUNT
Mtl	MATERIAL
MVP	MAINTENANCE VEHICLE PULLOUT

N

N	NORTH
NB	NORTHBOUND
No.	NUMBER (MUST HAVE PERIOD)
Nos.	NUMBERS (MUST HAVE PERIOD)
NPS	NOMINAL PIPE SIZE
NS	NEAR SIDE
NSP	NEW STANDARD PLAN
NTS	NOT TO SCALE

O

Oblr	OBLITERATE
OC	OVERCROSSING
OD	OUTSIDE DIAMETER
OF	OUTSIDE FACE
OG	ORIGINAL GROUND
OGAC	OPEN GRADED ASPHALT CONCRETE
OGFC	OPEN GRADED FRICTION COURSE
OH	OVERHEAD
OHWM	ORDINARY HIGH WATER MARK
O-O	OUT TO OUT
Opp	OPPOSITE
OSD	OVERSIDE DRAIN

P

P	PAGE
PAP	PERFORATED ALUMINUM PIPE
PB	PULL BOX
PC	POINT OF CURVATURE, PRECAST
PCC	POINT OF COMPOUND CURVE, PORTLAND CEMENT CONCRETE
PCMS	PORTABLE CHANGEABLE MESSAGE SIGN
PCP	PERFORATED CONCRETE PIPE, PRESTRESSED CONCRETE PIPE
PCVC	POINT OF COMPOUND VERTICAL CURVE
PEC	PERMIT TO ENTER AND CONSTRUCT
Ped	PEDESTRIAN
Ped OC	PEDESTRIAN OVERCROSSING
Ped UC	PEDESTRIAN UNDERCROSSING
Perm Mtl	PERMEABLE MATERIAL

P continued

PG	PROFILE GRADE
PI	POINT OF INTERSECTION
PJP	PARTIAL JOINT PENETRATION
Pkwy	PARKWAY
₱,PL	PLATE
P/L	PROPERTY LINE
PM	POST MILE, TIME FROM NOON TO MIDNIGHT
PN	PAVING NOTCH
POC	POINT OF HORIZONTAL CURVE
POT	POINT OF TANGENT
POVC	POINT OF VERTICAL CURVE
PP	PIPE PILE, PLASTIC PIPE, POWER POLE
PPL	PREFORMED PERMEABLE LINER
PPP	PERFORATED PLASTIC PIPE
PRC	POINT OF REVERSE CURVE
PRF	PAVEMENT REINFORCING FABRIC
PRVC	POINT OF REVERSE VERTICAL CURVE
PS&E	PLANS, SPECIFICATIONS AND ESTIMATES
PS, P/S	PRESTRESSED
PSP	PERFORATED STEEL PIPE
PT	POINT OF TANGENCY
PVC	POLYVINYL CHLORIDE
Pvmt	PAVEMENT

Q

Qty	QUANTITY

R

R	RADIUS
R & D	REMOVE AND DISPOSE
R & S	REMOVE AND SALVAGE
R/C	RATE OF CHANGE
RCA	REINFORCED CONCRETE ARCH
RCB	REINFORCED CONCRETE BOX
RCP	REINFORCED CONCRETE PIPE
RCPA	REINFORCED CONCRETE PIPE ARCH
Rd	ROAD
Reinf	REINFORCED, REINFORCEMENT, REINFORCING
Rel	RELOCATE
Repl	REPLACEMENT
Ret	RETAINING
Rev	REVISED, REVISION
Rdwy	ROADWAY
RHMA	RUBBERIZED HOT MIX ASPHALT
Riv	RIVER
RM	ROAD-MIXED
RP	RADIUS POINT, REFERENCE POINT
RR	RAILROAD
RSP	ROCK SLOPE PROTECTION, REVISED STANDARD PLAN
Rt	RIGHT
Rte	ROUTE
RW	REDWOOD, RETAINING WALL
R/W	RIGHT OF WAY
Rwy	RAILWAY

S

S	SOUTH, SUPPLEMENT
SAE	STRUCTURE APPROACH EMBANKMENT
Salv	SALVAGE
SAPP	STRUCTURAL ALUMINUM PLATE PIPE
SB	SOUTHBOUND
SC	SAND CUSHION
SCSP	SLOTTED CORRUGATED STEEL PIPE
SD	STORM DRAIN
Sec	SECOND, SECTION
Sep	SEPARATION
SG	SUBGRADE
Shld	SHOULDER
Sht	SHEET
Sim	SIMILAR
₺	STATION LINE
SM	SELECTED MATERIAL
Spec	SPECIAL, SPECIFICATIONS
SPP	SLOTTED PLASTIC PIPE
SS	SLOPE STAKE
SSBM	STRAP AND SADDLE BRACKET METHOD
SSD	STRUCTURAL SECTION DRAIN
SSPA	STRUCTURAL STEEL PLATE ARCH
SSPP	STRUCTURAL STEEL PLATE PIPE
SSPPA	STRUCTURAL STEEL PLATE PIPE ARCH
SSRP	STEEL SPIRAL RIB PIPE
St	STREET
Sta	STATION
STBB	SINGLE THRIE BEAM BARRIER
Std	STANDARD
Str	STRUCTURE
Surf	SURFACING
SW	SIDEWALK, SOUND WALL
Swr	SEWER
Sym	SYMMETRICAL
S4S	SURFACE 4 SIDES

T

T	SEMI-TANGENT
Tan	TANGENT
TBB	THRIE BEAM BARRIER
Tbr	TIMBER
TC	TOP OF CURB
TCB	TRAFFIC CONTROL BOX
TCE	TEMPORARY CONSTRUCTION EASEMENT
Tel	TELEPHONE
Temp	TEMPORARY
TG	TOP OF GRADE
Tot	TOTAL
TP	TELEPHONE POLE
TPB	TREATED PERMEABLE BASE
TPM	TREATED PERMEABLE MATERIAL
Trans	TRANSITION

T continued

TS	TRANSVERSE, TRAFFIC SIGNAL, TUBULAR STEEL
Typ	TYPICAL

U

UC	UNDERCROSSING
UD	UNDERDRAIN
UG	UNDERGROUND
UON	UNLESS OTHERWISE NOTED
UP	UNDERPASS

V

V	VALVE, DESIGN SPEED
Var	VARIABLE, VARIES
VC	VERTICAL CURVE
VCP	VITRIFIED CLAY PIPE
Vert	VERTICAL
Via	VIADUCT
Vol	VOLUME

W

W	WEST, WIDTH
WB	WESTBOUND
WH	WEEP HOLE
WM	WIRE MESH
WS	WATER SURFACE
WSP	WELDED STEEL PIPE
Wt	WEIGHT
WV	WATER VALVE
WW	WINGWALL
WWLOL	WINGWALL LAYOUT LINE

X

X Sec	CROSS SECTION
Xing	CROSSING

Y

Yr	YEAR
Yrs	YEARS

Dist	COUNTY	ROUTE	POST MILES TOTAL PROJECT	SHEET No.	TOTAL SHEETS
02	Sis	5	R10.7/R19.5	277	327

Grace M. Tsushima
REGISTERED CIVIL ENGINEER

July 19, 2013
PLANS APPROVAL DATE

REGISTERED PROFESSIONAL ENGINEER Grace M. Tsushima No. C49814 Exp. 9-30-14 CIVIL STATE OF CALIFORNIA

THE STATE OF CALIFORNIA OR ITS OFFICERS OR AGENTS SHALL NOT BE RESPONSIBLE FOR THE ACCURACY OR COMPLETENESS OF SCANNED COPIES OF THIS PLAN SHEET.

TO ACCOMPANY PLANS DATED 06-23-15

UNIT OF MEASUREMENT SYMBOLS:

Some of the symbols used in the project plan quantity tables and in the Bid Item List are:

TABLE A

SYMBOL USED	DEFINITIONS
ACRE	ACRE
CF	CUBIC FOOT
CY	CUBIC YARD
EA	EACH
GAL	GALLON
LB	POUND
LF	LINEAR FOOT
SQFT	SQUARE FOOT
SQYD	SQUARE YARD
STA	100 FEET
TAB	TABLET
TON	2,000 POUNDS

Some of the symbols used in the plans other than in the project plan quantity tables are:

TABLE B

SYMBOL USED	DEFINITIONS
ksi	KIPS PER SQUARE INCH
ksf	KIPS PER SQUARE FOOT
psi	POUNDS PER SQUARE INCH
psf	POUNDS PER SQUARE FOOT
lb/ft^3, pcf	POUNDS PER CUBIC FOOT
tsf	TONS PER SQUARE FOOT
mph, MPH *	MILES PER HOUR
ø	NOMINAL DIAMETER
oz	OUNCE
lb	POUND
kip	1,000 POUNDS
cal	CALORIE
ft	FOOT OR FEET
gal	GALLON

* For use on a sign panel only

STATE OF CALIFORNIA
DEPARTMENT OF TRANSPORTATION

ABBREVIATIONS (SHEET 2 OF 2)

NO SCALE

RSP A10B DATED JULY 19, 2013 SUPERSEDES STANDARD PLAN A10B DATED MAY 20, 2011 - PAGE 2 OF THE STANDARD PLANS BOOK DATED 2010.

REVISED STANDARD PLAN RSP A10B

2010 REVISED STANDARD PLAN RSP A10B

DATE PLOTTED => 26-JUN-2015
TIME PLOTTED => 09:52

Dist	COUNTY	ROUTE	POST MILES TOTAL PROJECT	SHEET No.	TOTAL SHEETS
02	Sis	5	R10.7/R19.5	278	327

REGISTERED CIVIL ENGINEER

July 19, 2013
PLANS APPROVAL DATE

REGISTERED PROFESSIONAL ENGINEER Roberta L. McLaughlin No. C40375 Exp. 3-31-15 CIVIL STATE OF CALIFORNIA

THE STATE OF CALIFORNIA OR ITS OFFICERS OR AGENTS SHALL NOT BE RESPONSIBLE FOR THE ACCURACY OR COMPLETENESS OF SCANNED COPIES OF THIS PLAN SHEET.

TO ACCOMPANY PLANS DATED 06-23-15

EXIT RAMP NEUTRAL AREA (GORE) TREATMENT

DETAIL 36

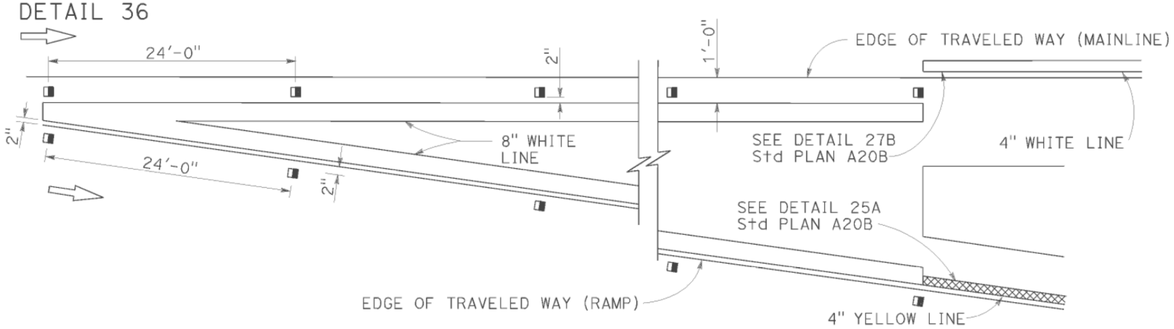

ENTRANCE RAMP NEUTRAL AREA (MERGE) TREATMENT

DETAIL 36A

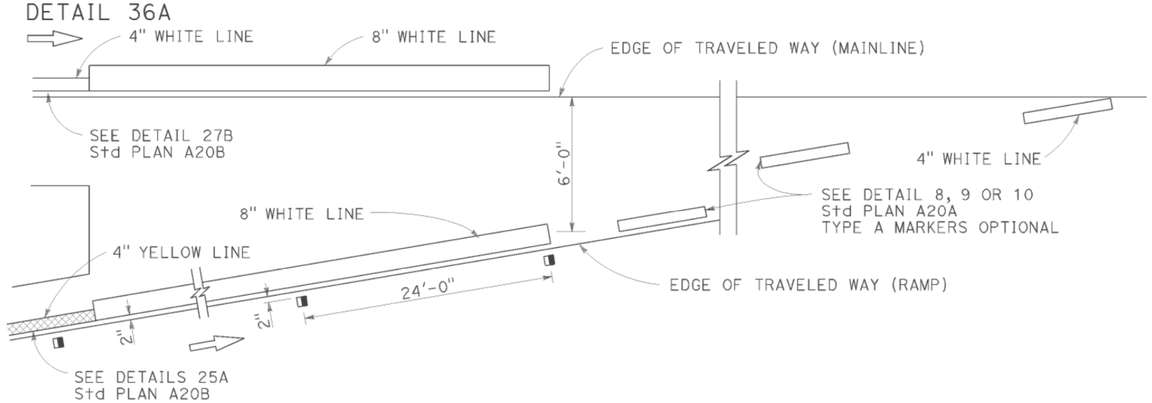

ENTRANCE RAMP NEUTRAL AREA (ACCELERATION LANE) TREATMENT

DETAIL 36B

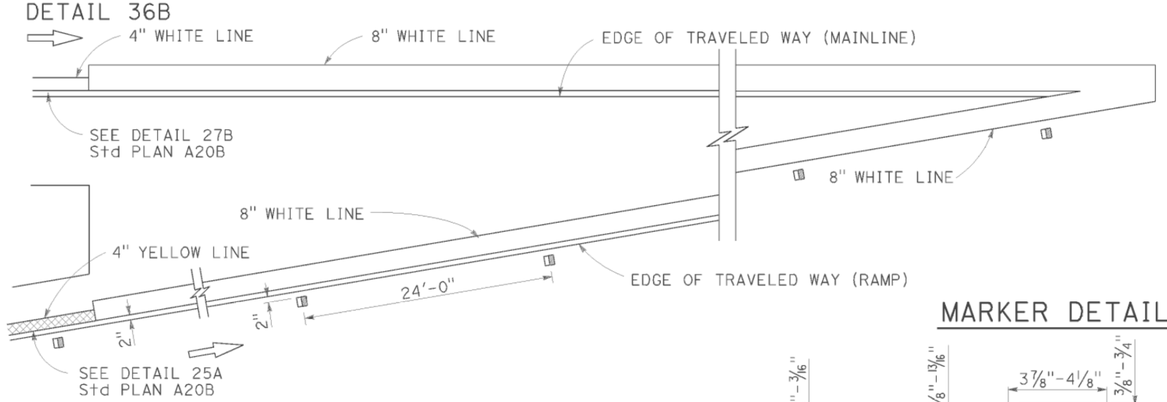

MARKER DETAILS

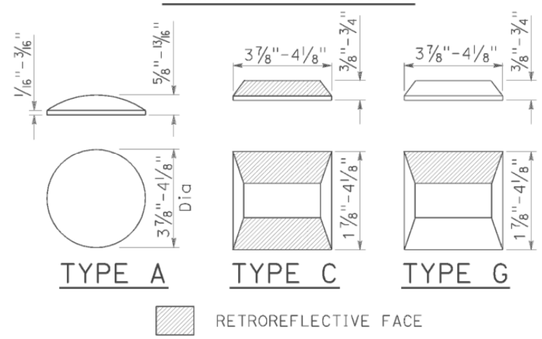

LEGEND:

MARKERS

- ○ TYPE A WHITE NON-REFLECTIVE
- ⊞ TYPE C RED-CLEAR RETROREFLECTIVE
- ◨ TYPE G ONE-WAY CLEAR RETROREFLECTIVE

LANE DROP AT EXIT RAMPS

DETAIL 37

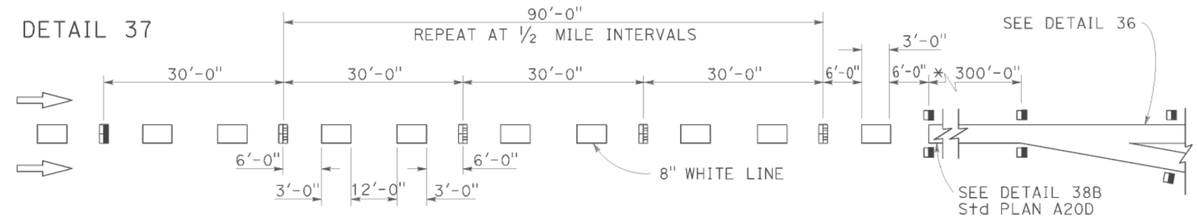

DETAIL 37A

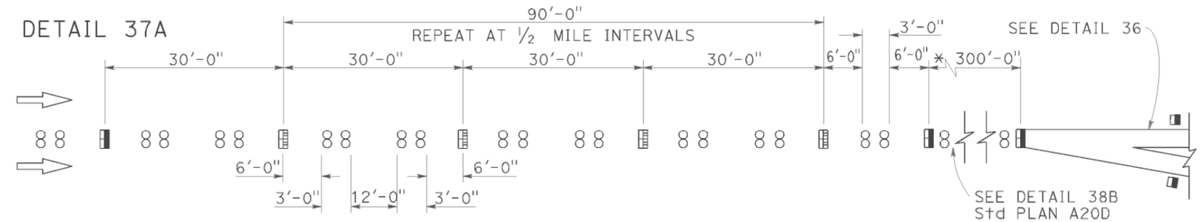

* The solid channelizing line shown may be omitted on short auxiliary lanes where weaving length is critical.

LANE DROP AT INTERSECTIONS

DETAIL 37B

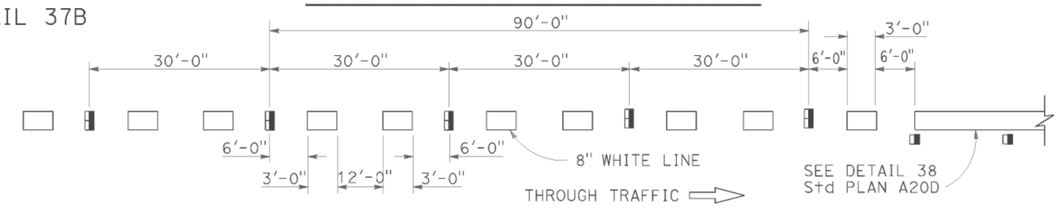

DETAIL 37C

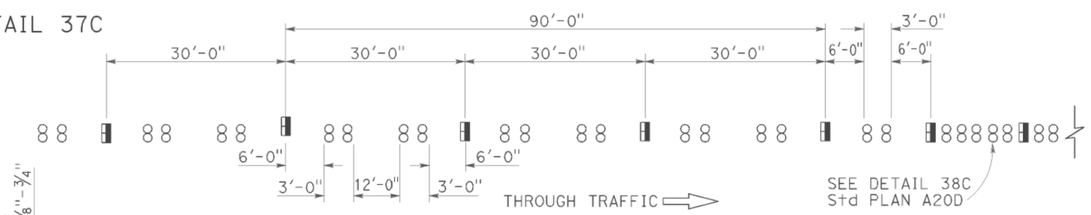

STATE OF CALIFORNIA
DEPARTMENT OF TRANSPORTATION

PAVEMENT MARKERS AND TRAFFIC LINE TYPICAL DETAILS

NO SCALE

RSP A20C DATED JULY 19, 2013 SUPERSEDES STANDARD PLAN A20C DATED MAY 20, 2011 - PAGE 11 OF THE STANDARD PLANS BOOK DATED 2010.

REVISED STANDARD PLAN RSP A20C

2010 REVISED STANDARD PLAN RSP A20C

DATE PLOTTED => 26-JUN-2015
TIME PLOTTED => 09:52

Dist	COUNTY	ROUTE	POST MILES TOTAL PROJECT	SHEET No.	TOTAL SHEETS
02	Sis	5	R10.7/R19.5	279	327

REGISTERED CIVIL ENGINEER

April 20, 2012
PLANS APPROVAL DATE

REGISTERED PROFESSIONAL ENGINEER
Roberta L. McLaughlin
No. C40375
Exp. 3-31-13
CIVIL
STATE OF CALIFORNIA

THE STATE OF CALIFORNIA OR ITS OFFICERS OR AGENTS SHALL NOT BE RESPONSIBLE FOR THE ACCURACY OR COMPLETENESS OF SCANNED COPIES OF THIS PLAN SHEET.

TO ACCOMPANY PLANS DATED 06-23-15

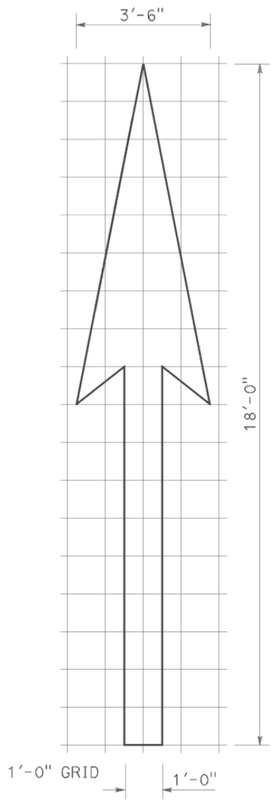

A=25 ft^2

TYPE I 18'-0" ARROW

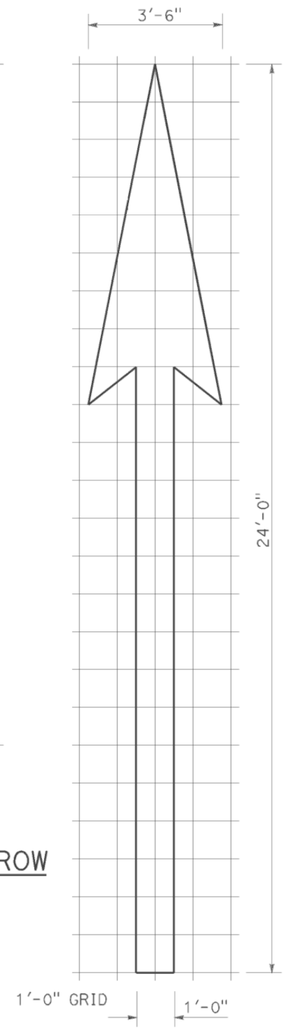

A=31 ft^2

TYPE I 24'-0" ARROW

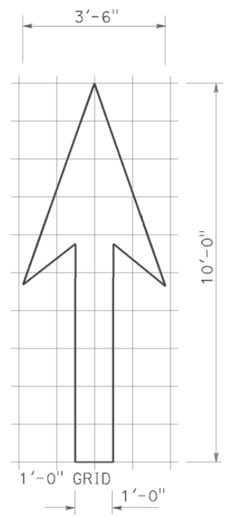

A=14 ft^2

TYPE I 10'-0" ARROW

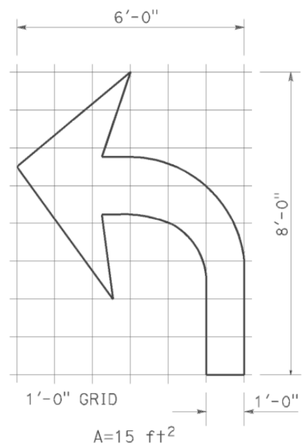

A=15 ft^2

TYPE IV (L) ARROW

(For Type IV (R) arrow, use mirror image)

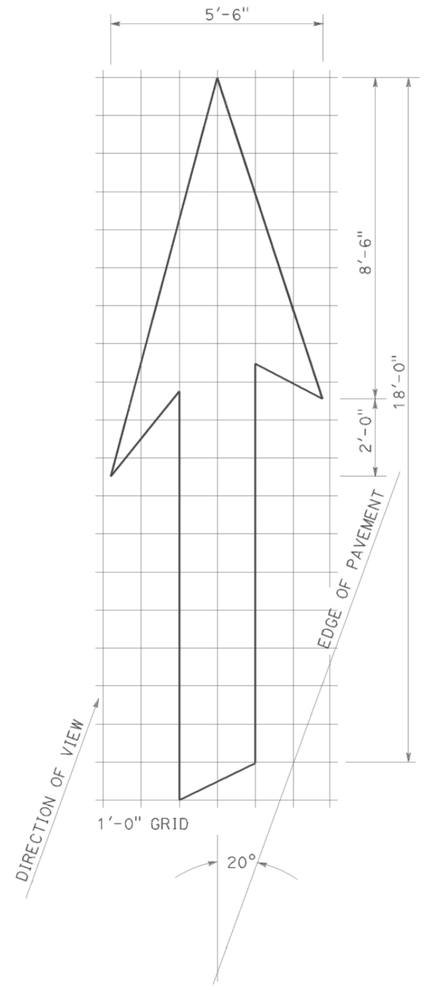

A=42 ft^2

TYPE VI ARROW

Right lane drop arrow
(For left lane, use mirror image)

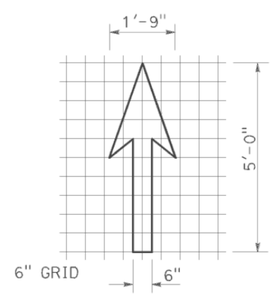

A=3.5 ft^2

BIKE LANE ARROW

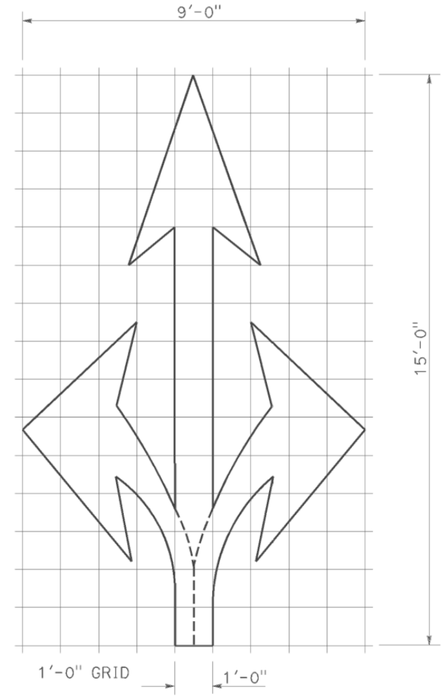

A=36 ft^2

TYPE VIII ARROW

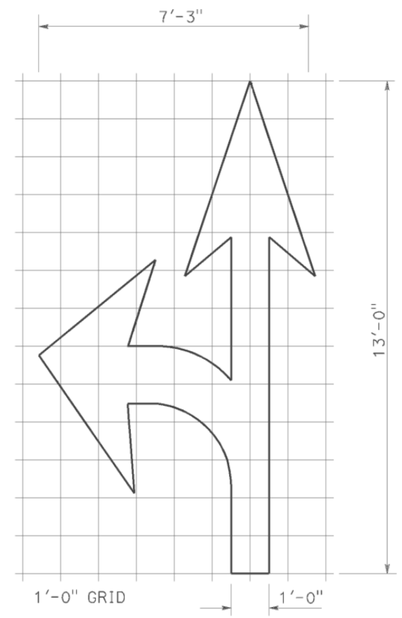

A=27 ft^2

TYPE VII (L) ARROW

(For Type VII (R) arrow, use mirror image)

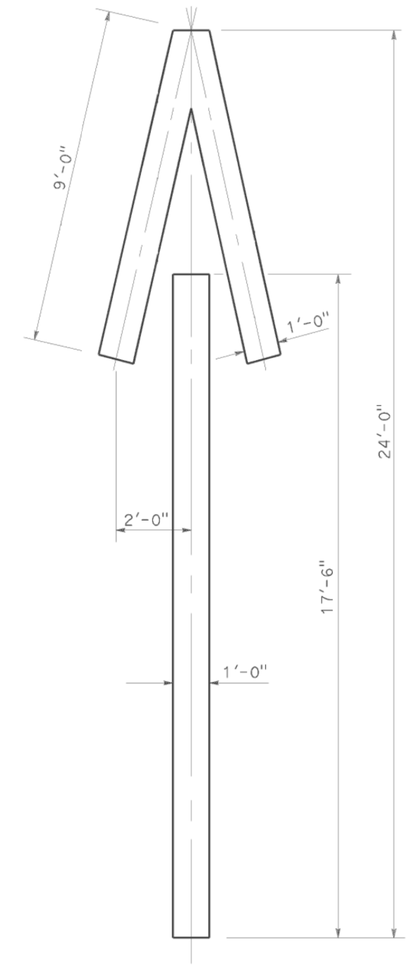

A=33 ft^2

TYPE V ARROW

NOTE:
Minor variations in dimensions may be accepted by the Engineer.

STATE OF CALIFORNIA
DEPARTMENT OF TRANSPORTATION

PAVEMENT MARKINGS ARROWS

NO SCALE

RSP A24A DATED APRIL 20, 2012 SUPERSEDES STANDARD PLAN A24A DATED MAY 20, 2011 - PAGE 13 OF THE STANDARD PLANS BOOK DATED 2010.

REVISED STANDARD PLAN RSP A24A

2010 REVISED STANDARD PLAN RSP A24A

DATE PLOTTED => 26-JUN-2015
TIME PLOTTED => 09:52

Dist	COUNTY	ROUTE	POST MILES TOTAL PROJECT	SHEET No.	TOTAL SHEETS
02	Sis	5	R10.7/R19.5	280	327

REGISTERED CIVIL ENGINEER

July 20, 2012
PLANS APPROVAL DATE

REGISTERED PROFESSIONAL ENGINEER
Roberta L. McLaughlin
No. C40375
Exp. 3-31-13
CIVIL
STATE OF CALIFORNIA

THE STATE OF CALIFORNIA OR ITS OFFICERS OR AGENTS SHALL NOT BE RESPONSIBLE FOR THE ACCURACY OR COMPLETENESS OF SCANNED COPIES OF THIS PLAN SHEET.

TO ACCOMPANY PLANS DATED 06-23-15

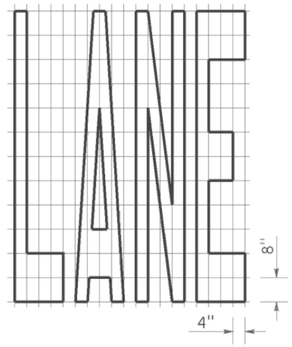

A=24 ft^2

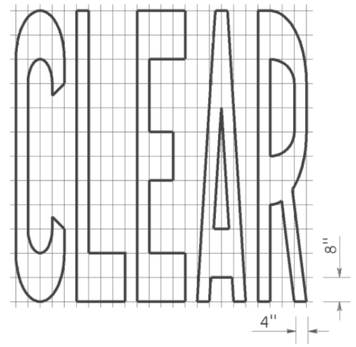

A=27 ft^2

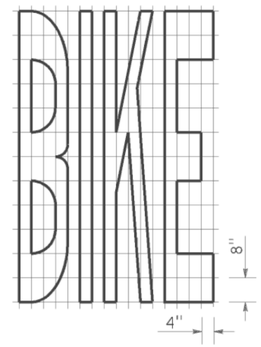

A=21 ft^2

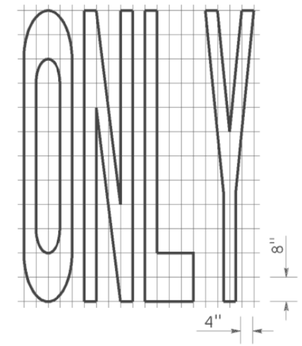

A=22 ft^2

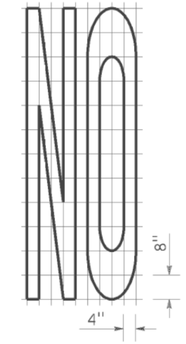

A=14 ft^2

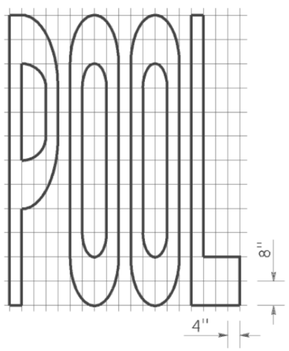

A=23 ft^2

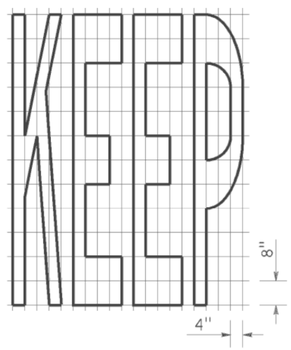

A=24 ft^2

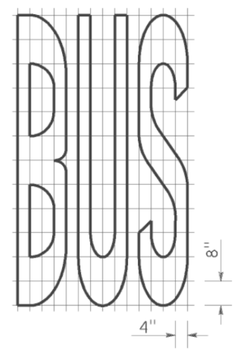

A=20 ft^2

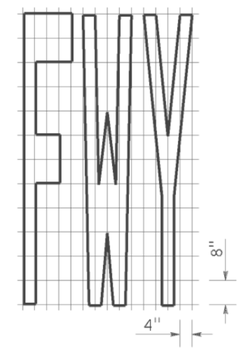

A=16 ft^2

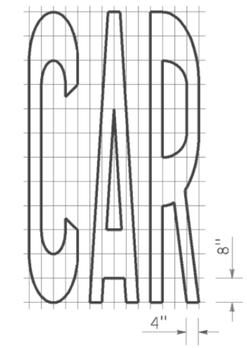

A=17 ft^2

WORD MARKINGS			
ITEM	ft^2	ITEM	ft^2
LANE	24	NO	14
POOL	23	BIKE	21
CAR	17	BUS	20
CLEAR	27	ONLY	22
KEEP	24	FWY	16

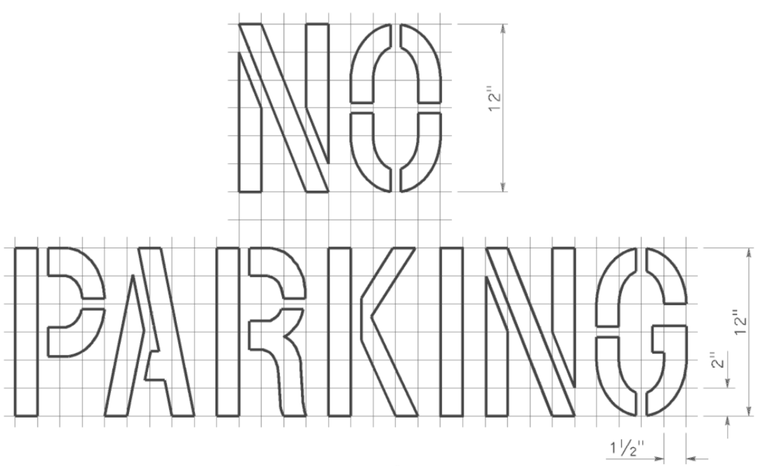

A=2 ft^2
See Notes 6 and 7

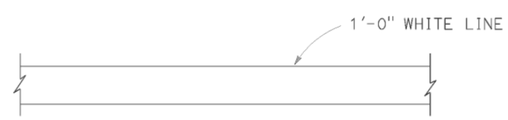

LIMIT LINE (STOP LINE)

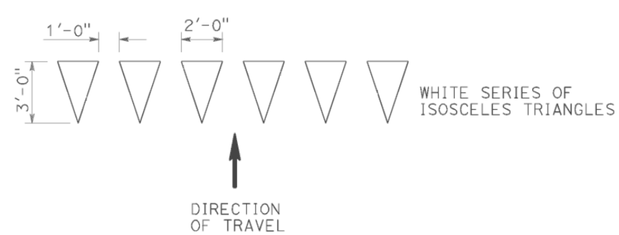

YIELD LINE

NOTES:

1. If a message consists of more than one word, it should read "UP", i.e., the first word should be nearest the driver.
2. The space between words should be at least four times the height of the characters for low speed roads, but not more than ten times the height of the characters. The space may be reduced appropriately where there is limited space because of local conditions.
3. Minor variations in dimensions may be accepted by the Engineer.
4. Portions of a letter, number or symbol may be separated by connecting segments not to exceed 2" in width.
5. The words "NO PARKING" pavement marking is to be used for parking facilities. For typical locations of markings, see Standard Plans A90A and A90B.
6. The words "NO PARKING", shall be painted in white letters no less than 1'-0" high on a contrasting background and located so that it is visible to traffic enforcement officials.

STATE OF CALIFORNIA
DEPARTMENT OF TRANSPORTATION

PAVEMENT MARKINGS WORDS, LIMIT AND YIELD LINES

NO SCALE

RSP A24E DATED JULY 20, 2012 SUPERSEDES STANDARD PLAN A24E
DATED MAY 20, 2011 - PAGE 17 OF THE STANDARD PLANS BOOK DATED 2010.

REVISED STANDARD PLAN RSP A24E

2010 REVISED STANDARD PLAN RSP A24E

DATE PLOTTED => 26-JUN-2015
TIME PLOTTED => 09:52

Dist	COUNTY	ROUTE	POST MILES TOTAL PROJECT	SHEET No.	TOTAL SHEETS
02	Sis	5	R10.7/R19.5	281	327

Randell D. Hiatt
REGISTERED CIVIL ENGINEER

July 19, 2013
PLANS APPROVAL DATE

REGISTERED PROFESSIONAL ENGINEER
Randell D. Hiatt
No. C50200
Exp. 6-30-15
CIVIL
STATE OF CALIFORNIA

THE STATE OF CALIFORNIA OR ITS OFFICERS OR AGENTS SHALL NOT BE RESPONSIBLE FOR THE ACCURACY OR COMPLETENESS OF SCANNED COPIES OF THIS PLAN SHEET.

TO ACCOMPANY PLANS DATED 06-23-15

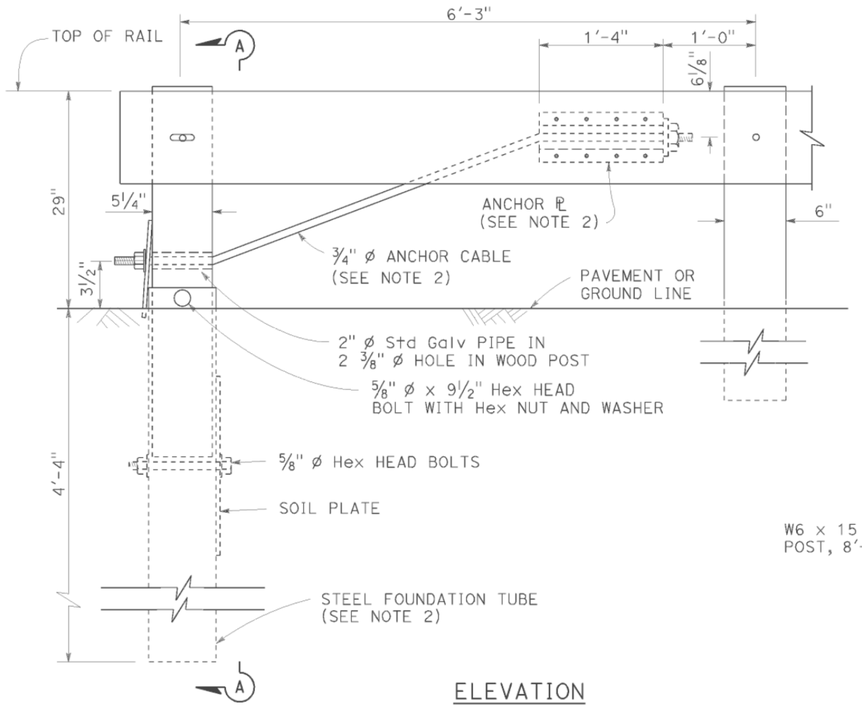

ELEVATION
END ANCHOR
ASSEMBLY (TYPE SFT)

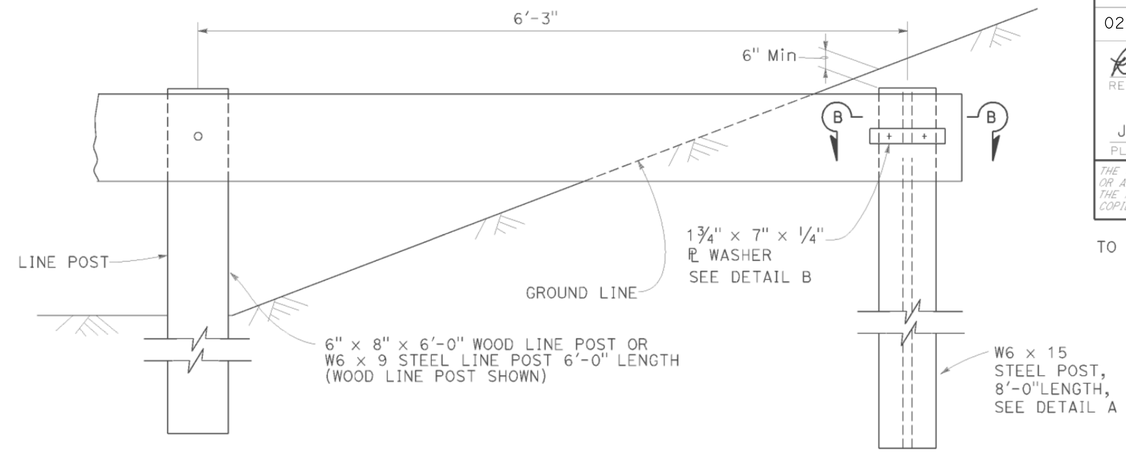

BURIED POST END ANCHOR

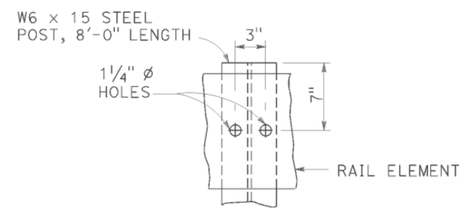

DETAIL A

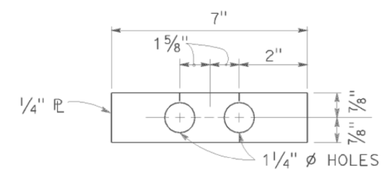

DETAIL B

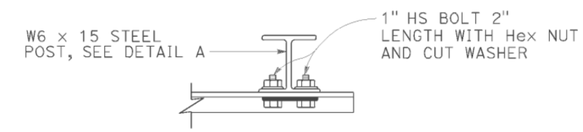

SECTION B-B

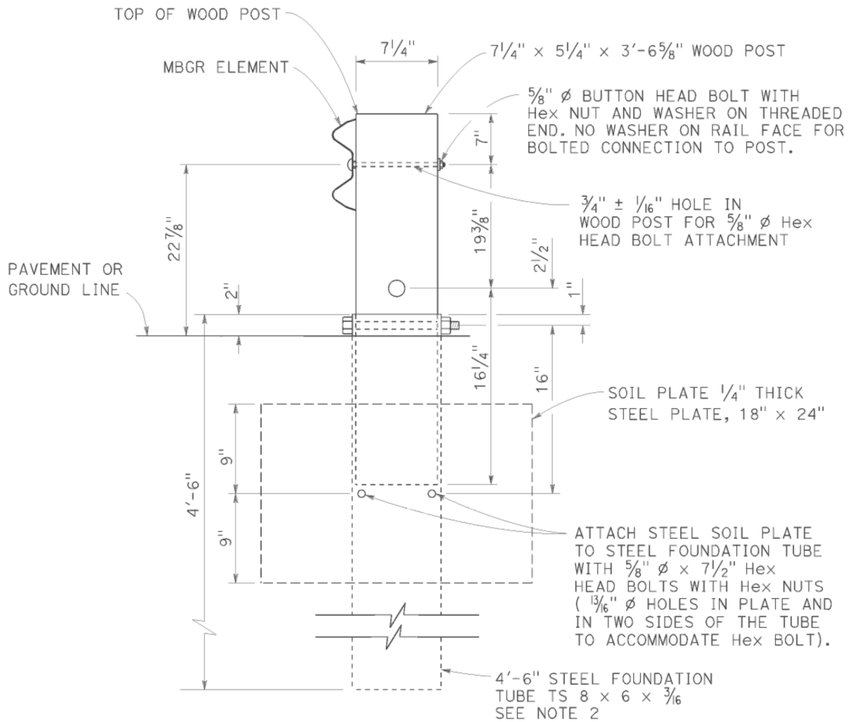

SECTION A-A

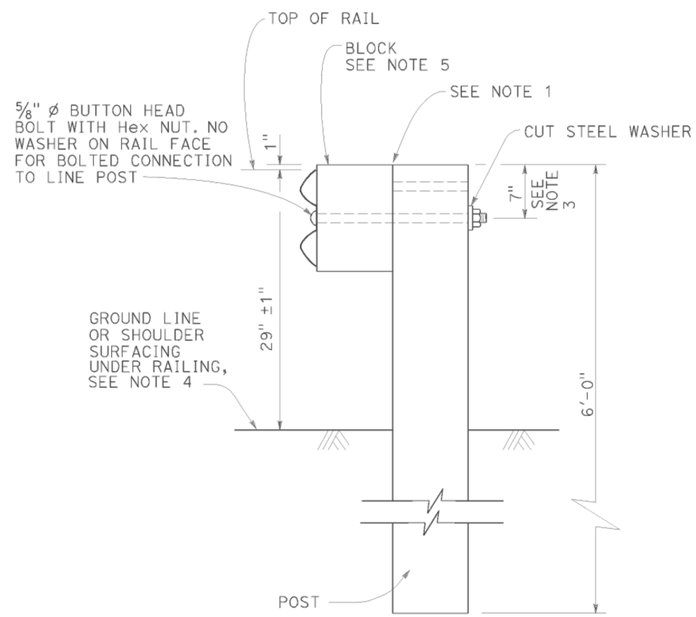

TYPICAL LINE
POST INSTALLATION

NOTES:

1. For wood post and wood block, toenail with 2-16d Galv nails in top of block. For steel post and notched wood or plastic block, notched face of block faces steel post.
2. A 6'-0" Length steel foundation tube, TS 8 x 6 x 3/16, without a soil plate, may be furnished and installed in place of the 4'-6" length steel foundation tube and soil plate shown, Minimum embadment of the 6'-0" length tube shall be 5'-9". A 5/8" ø Hex head bolt and nut shall be installed in the hole in the 6'-0" length tube to keep the wood post from dropping into the tube.
3. To connect railing to 27" terminal system end treatment, transition the top of railing height at a ratio of 120:1 to terminal system end treatment height plus one 12'-6" standard railing section at the transitioned height for a horizontal connection to the end treatment.
4. Install posts in soil.
5. See Revised Standard Plans RSP A77N1 and RSP A77N2 for details.
6. Holes excavation in the slope to construct the buried post end anchor shall be backfilled with selected earth, placed in layers approximately 1'-0" thick. Each layer shall be moistened and thoroughly compacted.

STATE OF CALIFORNIA
DEPARTMENT OF TRANSPORTATION

METAL BEAM GUARD RAILING RECONSTRUCT INSTALLATION

NO SCALE

RSP A77L3 DATED JULY 19, 2013 SUPPLEMENTS THE STANDARD PLANS BOOK DATED 2010.

REVISED STANDARD PLAN RSP A77L3

2010 REVISED STANDARD PLAN RSP A77L3

DATE PLOTTED => 26-JUN-2015
TIME PLOTTED => 09:52

Dist	COUNTY	ROUTE	POST MILES TOTAL PROJECT	SHEET No.	TOTAL SHEETS
02	Sis	5	R10.7/R19.5	282	327

Randell D. Hiatt
REGISTERED CIVIL ENGINEER

July 19, 2013
PLANS APPROVAL DATE

REGISTERED PROFESSIONAL ENGINEER
Randell D. Hiatt
No. C50200
Exp. 6-30-15
CIVIL
STATE OF CALIFORNIA

THE STATE OF CALIFORNIA OR ITS OFFICERS OR AGENTS SHALL NOT BE RESPONSIBLE FOR THE ACCURACY OR COMPLETENESS OF SCANNED COPIES OF THIS PLAN SHEET.

TO ACCOMPANY PLANS DATED 06-23-15

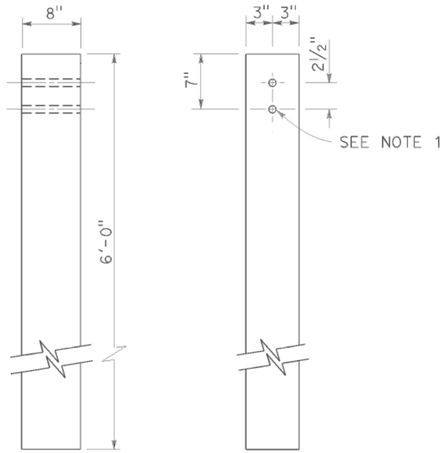

SIDE FRONT

6" x 8" WOOD POST
See Note 3

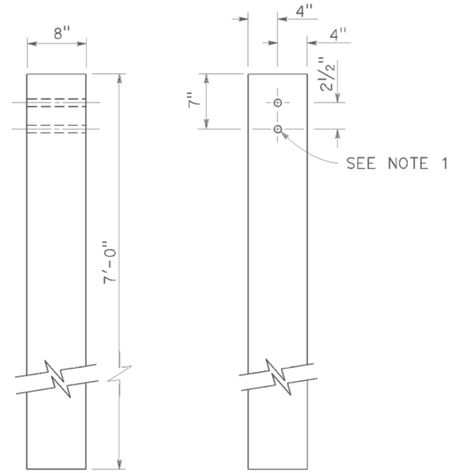

SIDE FRONT

8" x 8" WOOD POST
See Note 4

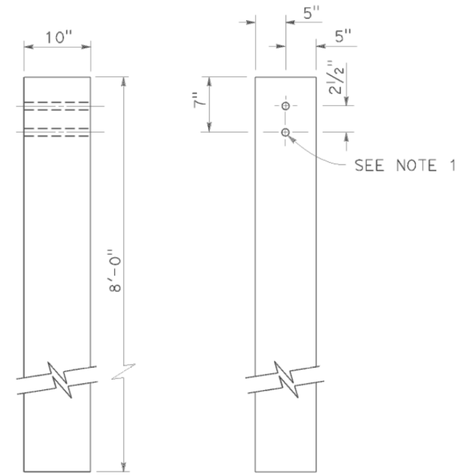

SIDE FRONT

10" x 10" WOOD POST
See Note 5

NOTES:

1. All holes in wood posts and blocks shall be ¾" Dia ± 1/16".
2. Dimensions shown for wood post are nominal.
3. This post and block combination used for standard line post sections of MGS.
4. This post and 8" x 12" block combination used for line post sections of MGS on narrow roadways.
5. This post and 8" x 12" block combination is typically used where strengthened line post sections of MGS are warranted to shield fixed objects.
6. See Revised Standard Plan RSP A77L3 for use of 6" x 8" and 8" x 8" wood blocks.

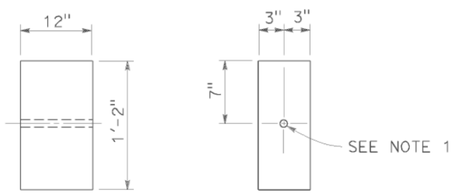

SIDE FRONT

6" x 12" WOOD BLOCK
See Note 3

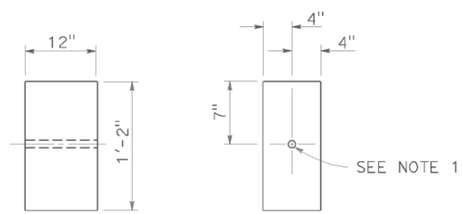

SIDE FRONT

8" x 12" WOOD BLOCK

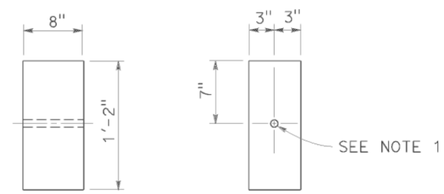

SIDE FRONT

6" x 8" WOOD BLOCK
Only for use with metal beam guard rail see Note 6

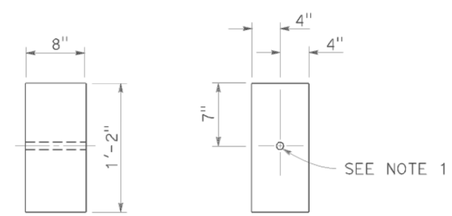

SIDE FRONT

8" x 8" WOOD BLOCK
Only for use with metal beam guard rail see Note 6

STATE OF CALIFORNIA
DEPARTMENT OF TRANSPORTATION

MIDWEST GUARDRAIL SYSTEM WOOD POST AND WOOD BLOCK DETAILS

NO SCALE

RSP A77N1 DATED JULY 19, 2013 SUPPLEMENTS THE STANDARD PLANS BOOK DATED 2010.

REVISED STANDARD PLAN RSP A77N1

2010 REVISED STANDARD PLAN RSP A77N1

DATE PLOTTED => 26-JUN-2015
TIME PLOTTED => 09:53

Dist	COUNTY	ROUTE	POST MILES TOTAL PROJECT	SHEET No.	TOTAL SHEETS
02	Sis	5	R10.7/R19.5	283	327

Randell D. Hiatt
REGISTERED CIVIL ENGINEER

November 15, 2013
PLANS APPROVAL DATE

REGISTERED PROFESSIONAL ENGINEER
Randell D. Hiatt
No. C50200
Exp. 6-30-15
CIVIL
STATE OF CALIFORNIA

THE STATE OF CALIFORNIA OR ITS OFFICERS OR AGENTS SHALL NOT BE RESPONSIBLE FOR THE ACCURACY OR COMPLETENESS OF SCANNED COPIES OF THIS PLAN SHEET.

TO ACCOMPANY PLANS DATED 06-23-15

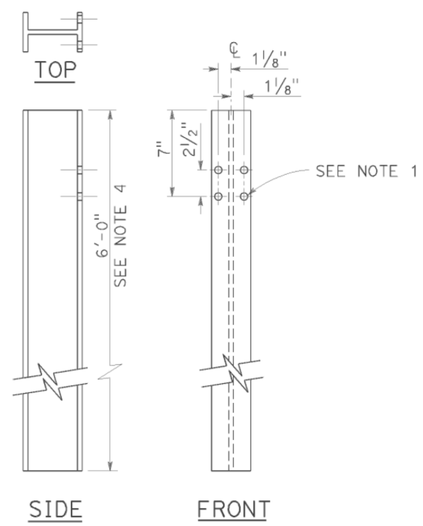

W6 x 9 OR W6 x 8.5
STEEL POST
See Note 4

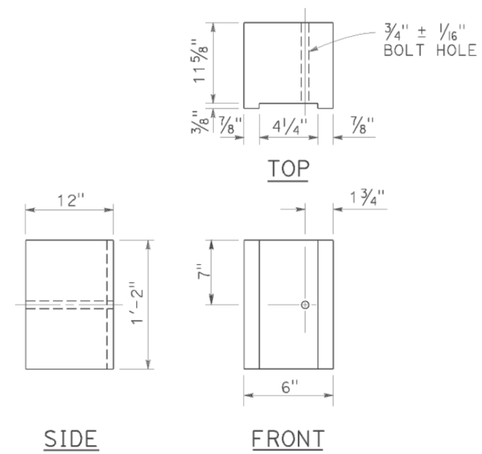

6" x 12"
NOTCHED WOOD BLOCK
See Notes 2 and 3

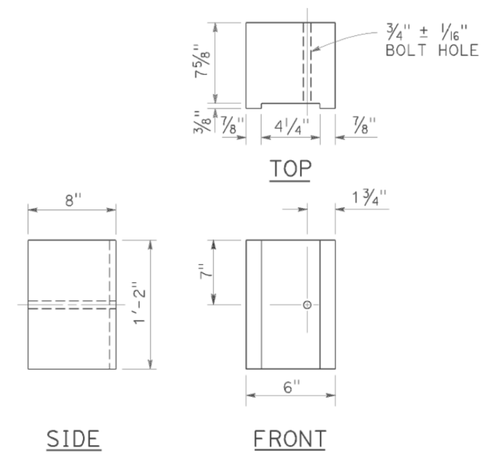

6" x 8"
NOTCHED WOOD BLOCK
Only for use with metal beam guard railing. See Note 5

NOTES:

1. All holes in steel post shall be 13/16" Dia maximum.
2. Dimensions shown for wood block are nominal.
3. Notched face of block faces steel post.
4. 6'-0" length posts to be used for typical roadway installation. See Revised Standard Plan RSP A77N3.
5. See Revised Standard Plan RSP A77L3 for use of 6" x 8" and 8" x 8" notched wood blocks.
6. This post and 8" x 12" block combination to be used for line post sections of MGS on narrow roadways and where strengthened line post sections of MGS are warranted to shield fixed objects.

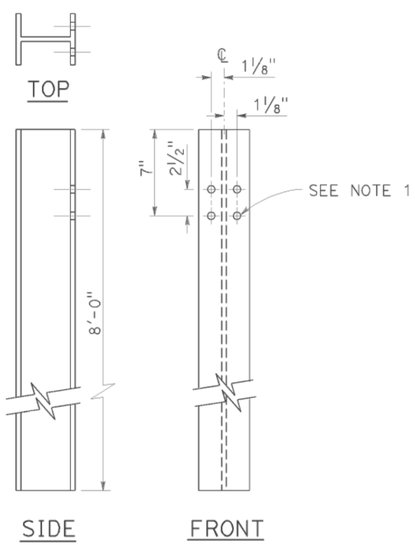

W6 x 15
STEEL POST
See Note 6

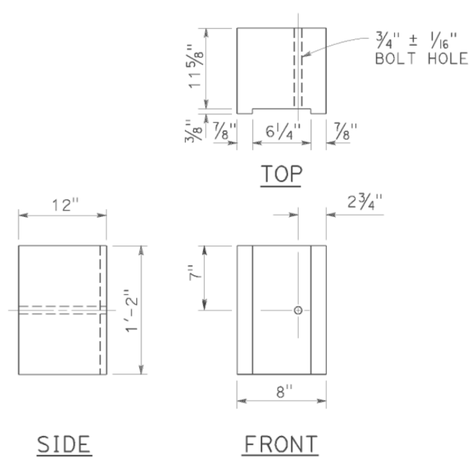

8" x 12"
NOTCHED WOOD BLOCK
See Notes 2 and 3

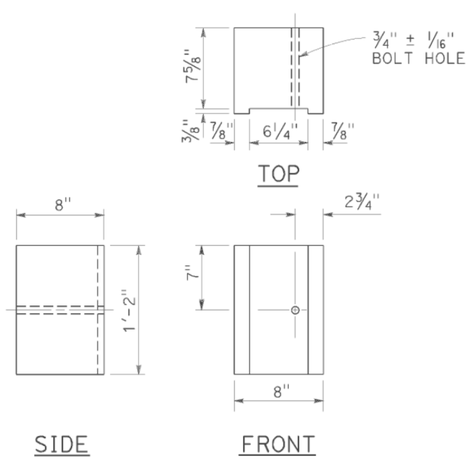

8" x 8"
NOTCHED WOOD BLOCK
Only for use with metal beam guard railing. See Note 5

STATE OF CALIFORNIA
DEPARTMENT OF TRANSPORTATION

MIDWEST GUARDRAIL SYSTEM STEEL POST AND NOTCHED WOOD BLOCK DETAILS

NO SCALE

RSP A77N2 DATED NOVEMBER 15, 2013 SUPERSEDES RSP A77N2
DATED JULY 19, 2013 THAT SUPPLEMENTS THE STANDARD PLANS BOOK DATED 2010.

REVISED STANDARD PLAN RSP A77N2

2010 REVISED STANDARD PLAN RSP A77N2

DATE PLOTTED => 26-JUN-2015
TIME PLOTTED => 09:53

Dist	COUNTY	ROUTE	POST MILES TOTAL PROJECT	SHEET No.	TOTAL SHEETS
02	Sis	5	R10.7/R19.5	284	327

Randell D. Hiatt
REGISTERED CIVIL ENGINEER

July 19, 2013
PLANS APPROVAL DATE

REGISTERED PROFESSIONAL ENGINEER
Randell D. Hiatt
No. C50200
Exp. 6-30-15
CIVIL
STATE OF CALIFORNIA

THE STATE OF CALIFORNIA OR ITS OFFICERS OR AGENTS SHALL NOT BE RESPONSIBLE FOR THE ACCURACY OR COMPLETENESS OF SCANNED COPIES OF THIS PLAN SHEET.

TO ACCOMPANY PLANS DATED 06-23-15

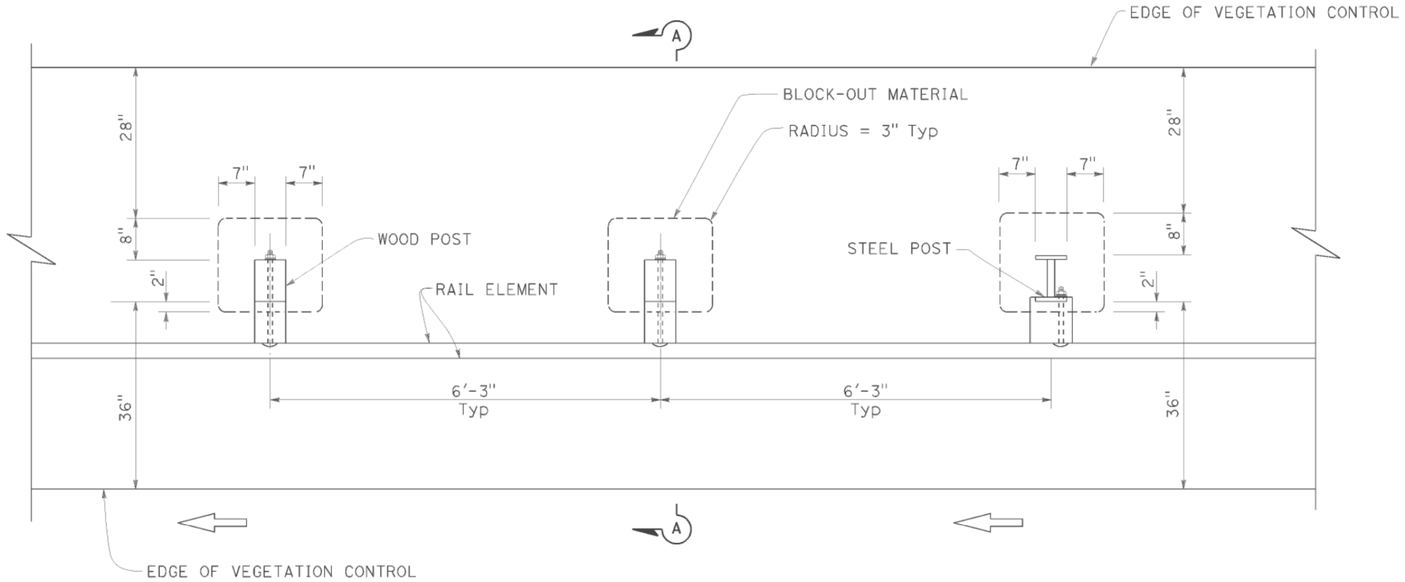

PLAN

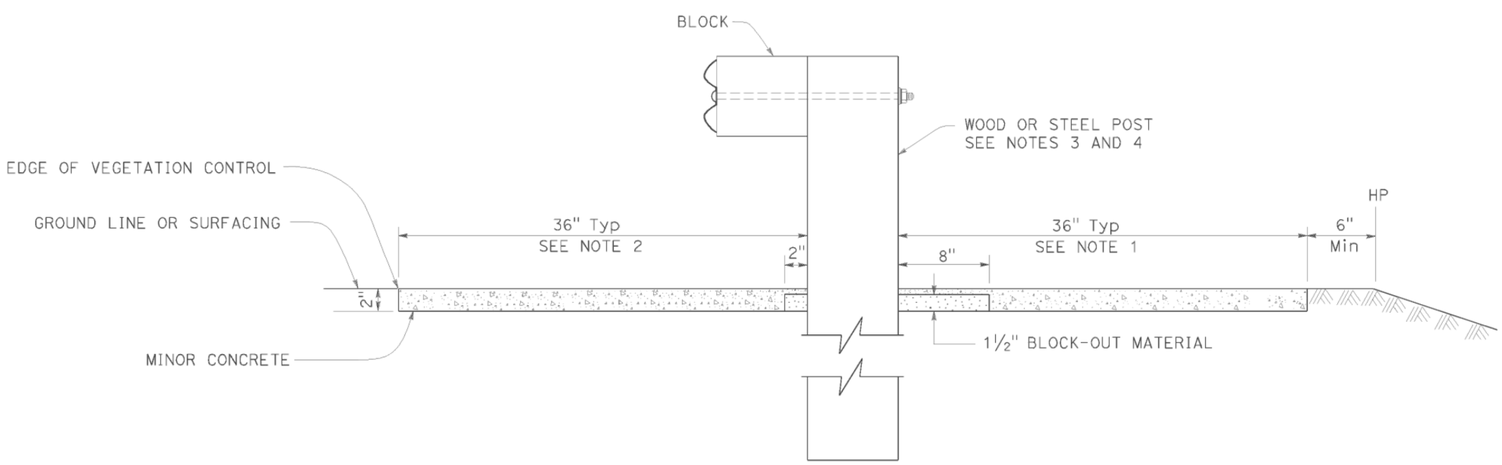

SECTION A-A

NOTES:

1. Where the distance between back of post and hinge point is less than 42", construct vegetation control to 6" from hinge point while maintaining the 8" block-out at back of post. If the 8" block-out at back of post can not be maintained, construct vegetation control flush with the back edge of post.
2. Where dike is constructed under railing, construct vegetation control to back edge of dike. Where paved shoulder is constructed within 36" in front of the post, construct vegetation control to the edge of paved shoulder.
3. For wood post sizes, see Revised Standard Plan RSP A77N1.
4. For steel post sizes, see Revised Standard Plan RSP A77N2.
5. For details not shown, see Revised Standard Plans RSP A77L1 and RSP A77L2.

STATE OF CALIFORNIA
DEPARTMENT OF TRANSPORTATION

MIDWEST GUARDRAIL SYSTEM TYPICAL VEGETATION CONTROL STANDARD RAILING SECTION

NO SCALE

RSP A77N5 DATED JULY 19, 2013 SUPPLEMENTS THE STANDARD PLANS BOOK DATED 2010.

REVISED STANDARD PLAN RSP A77N5

2010 REVISED STANDARD PLAN RSP A77N5

DATE PLOTTED => 26-JUN-2015
TIME PLOTTED => 09:53

Dist	COUNTY	ROUTE	POST MILES TOTAL PROJECT	SHEET No.	TOTAL SHEETS
02	Sis	5	R10.7/R19.5	285	327

Randell D. Hiatt
REGISTERED CIVIL ENGINEER

July 19, 2013
PLANS APPROVAL DATE

REGISTERED PROFESSIONAL ENGINEER
Randell D. Hiatt
No. C50200
Exp. 6-30-15
CIVIL
STATE OF CALIFORNIA

THE STATE OF CALIFORNIA OR ITS OFFICERS OR AGENTS SHALL NOT BE RESPONSIBLE FOR THE ACCURACY OR COMPLETENESS OF SCANNED COPIES OF THIS PLAN SHEET.

TO ACCOMPANY PLANS DATED 06-23-15

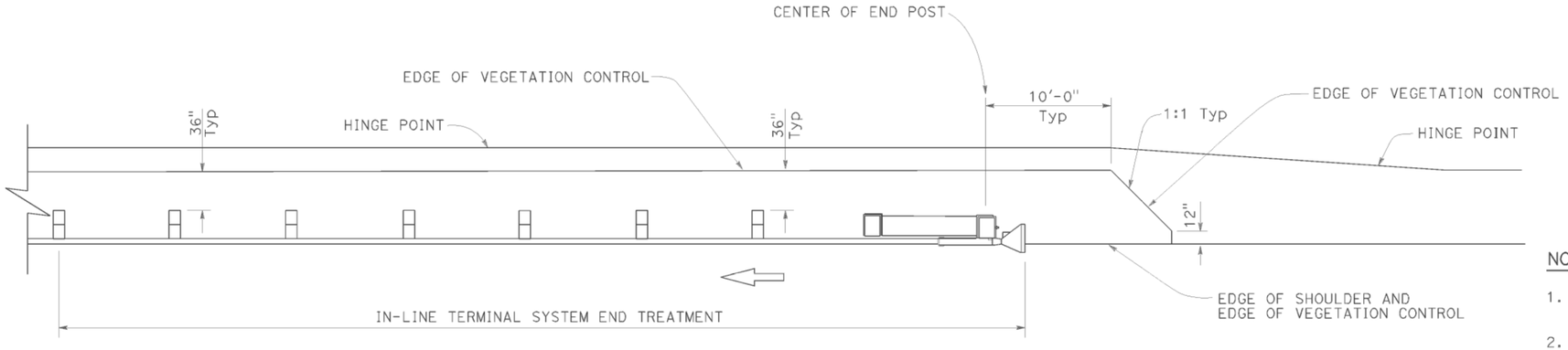

PLAN

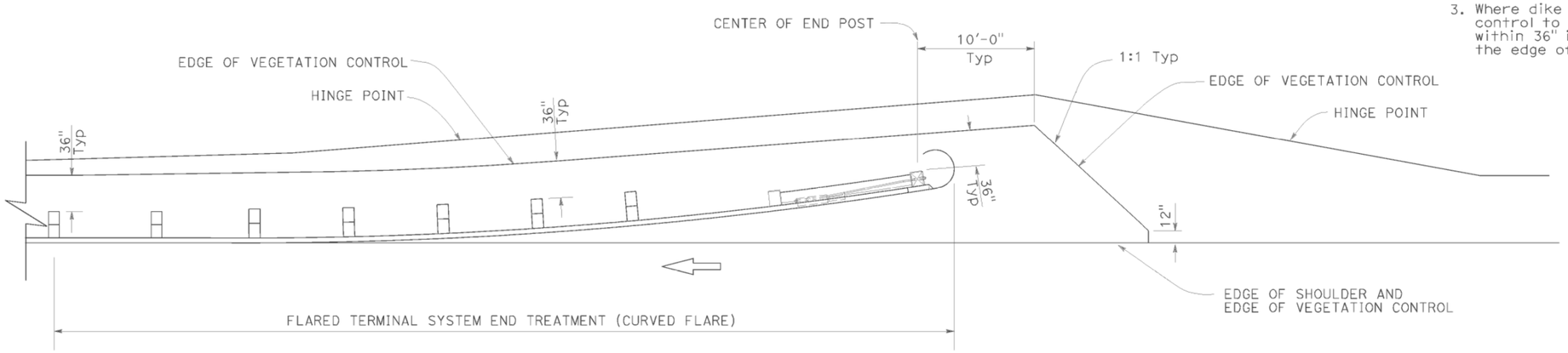

PLAN

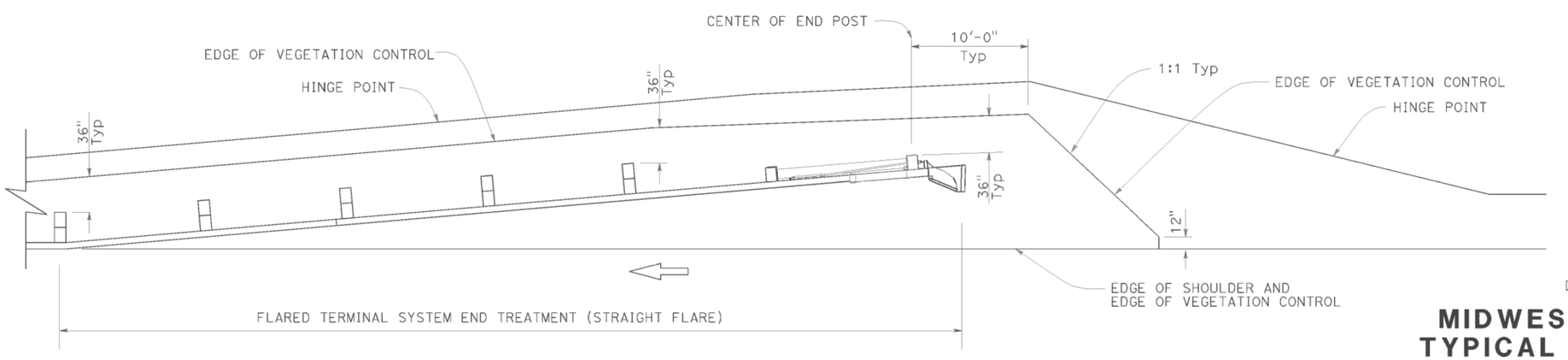

PLAN

NOTES:

1. See Revised Standard Plan RSP A77N5 for additional vegetation control details.
2. Where the distance between back of post and hinge point is less than 42", construct vegetation control to 6" from hinge point while maintaining the 8" block-out at back of post. If the 8" block-out at back of post can not be maintained, construct vegetation control flush with the back edge of post.
3. Where dike is constructed under railing, construct vegetation control to back edge of dike. Where paved shoulder is constructed within 36" in front of the post, construct vegetation control to the edge of paved shoulder.

STATE OF CALIFORNIA
DEPARTMENT OF TRANSPORTATION

MIDWEST GUARDRAIL SYSTEM TYPICAL VEGETATION CONTROL FOR TERMINAL SYSTEM END TREATMENTS

NO SCALE

RSP A77N6 DATED JULY 19, 2013 SUPPLEMENTS THE STANDARD PLANS BOOK DATED 2010.

REVISED STANDARD PLAN RSP A77N6

2010 REVISED STANDARD PLAN RSP A77N6

DATE PLOTTED => 26-JUN-2015
TIME PLOTTED => 09:53

Dist	COUNTY	ROUTE	POST MILES TOTAL PROJECT	SHEET No.	TOTAL SHEETS
02	Sis	5	R10.7/R19.5	286	327

Randell D. Hiatt
REGISTERED CIVIL ENGINEER

July 19, 2013
PLANS APPROVAL DATE

REGISTERED PROFESSIONAL ENGINEER
Randell D. Hiatt
No. C50200
Exp. 6-30-15
CIVIL
STATE OF CALIFORNIA

THE STATE OF CALIFORNIA OR ITS OFFICERS OR AGENTS SHALL NOT BE RESPONSIBLE FOR THE ACCURACY OR COMPLETENESS OF SCANNED COPIES OF THIS PLAN SHEET.

TO ACCOMPANY PLANS DATED 06-23-15

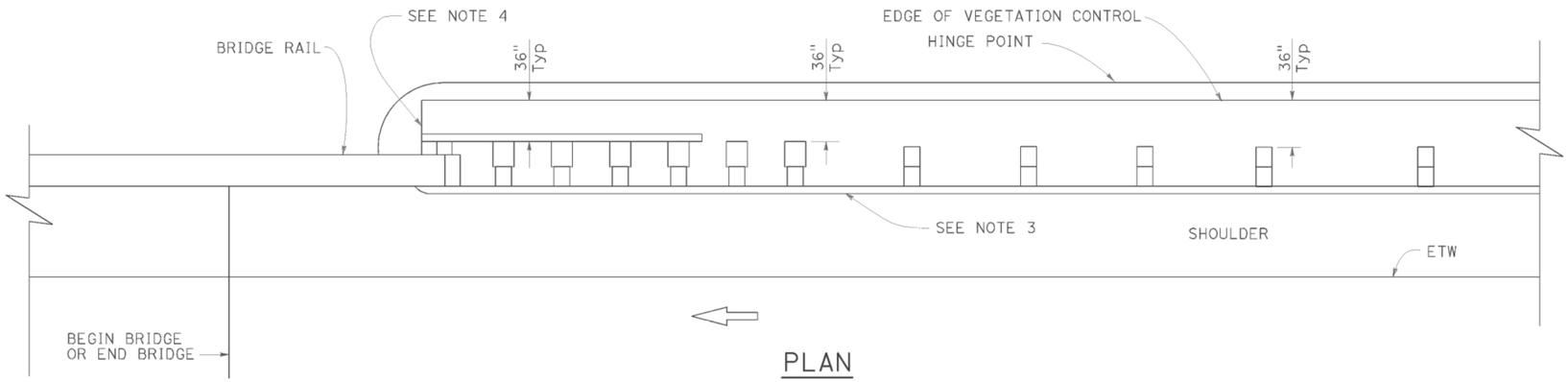

PLAN

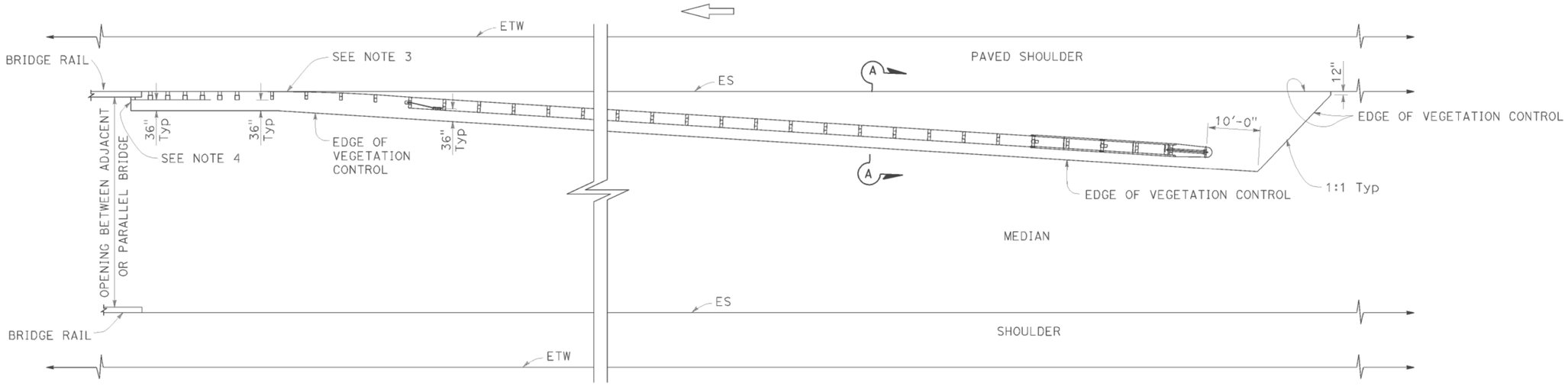

PLAN

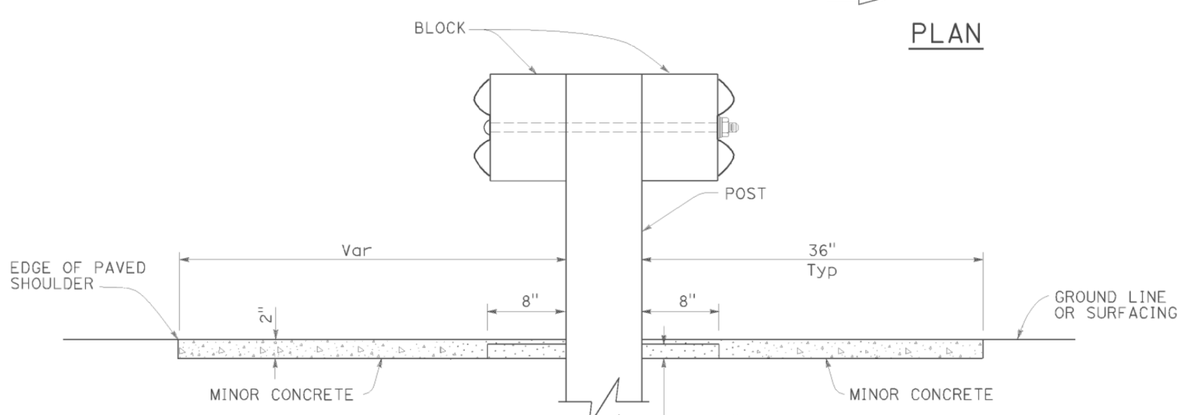

SECTION A-A

NOTES:

1. See Revised Standard Plan RSP A77N5 for additional vegetation control details.
2. Where the distance between back of post and hinge point is less than 42", construct vegetation control to 6" from hinge point while maintaining the 8" block-out at back of post. If the 8" block-out at back of post can not be maintained, construct vegetation control flush with the back edge of post.
3. Where dike is constructed under railing, construct vegetation control to back edge of dike. Where paved shoulder is constructed within 36" in front of the post, construct vegetation control to the edge of paved shoulder.
4. End vegetation control at end of backside rail element.

STATE OF CALIFORNIA
DEPARTMENT OF TRANSPORTATION

MIDWEST GUARDRAIL SYSTEM TYPICAL VEGETATION CONTROL AT STRUCTURE APPROACH

NO SCALE

RSP A77N7 DATED JULY 19, 2013 SUPPLEMENTS THE STANDARD PLANS BOOK DATED 2010.

REVISED STANDARD PLAN RSP A77N7

2010 REVISED STANDARD PLAN RSP A77N7

DATE PLOTTED => 26-JUN-2015
TIME PLOTTED => 09:53

Dist	COUNTY	ROUTE	POST MILES TOTAL PROJECT	SHEET No.	TOTAL SHEETS
02	Sis	5	R10.7/R19.5	287	327

Randell D. Hiatt
REGISTERED CIVIL ENGINEER

July 19, 2013
PLANS APPROVAL DATE

REGISTERED PROFESSIONAL ENGINEER
Randell D. Hiatt
No. C50200
Exp. 6-30-15
CIVIL
STATE OF CALIFORNIA

THE STATE OF CALIFORNIA OR ITS OFFICERS OR AGENTS SHALL NOT BE RESPONSIBLE FOR THE ACCURACY OR COMPLETENESS OF SCANNED COPIES OF THIS PLAN SHEET.

TO ACCOMPANY PLANS DATED 06-23-15

NOTES:

1. See Revised Standard Plan RSP A77N5 for additional vegetation control details.
2. Where the distance between back of post and hinge point is less than 42", construct vegetation control to 6" from hinge point while maintaining the 8" block-out at back of post. If the 8" block-out at back of post can not be maintained, construct vegetation control flush with the back edge of post.
3. Where dike is constructed under railing, construct vegetation control to back edge of dike. Where paved shoulder is constructed within 36" in front of the post, construct vegetation control to the edge of paved shoulder.

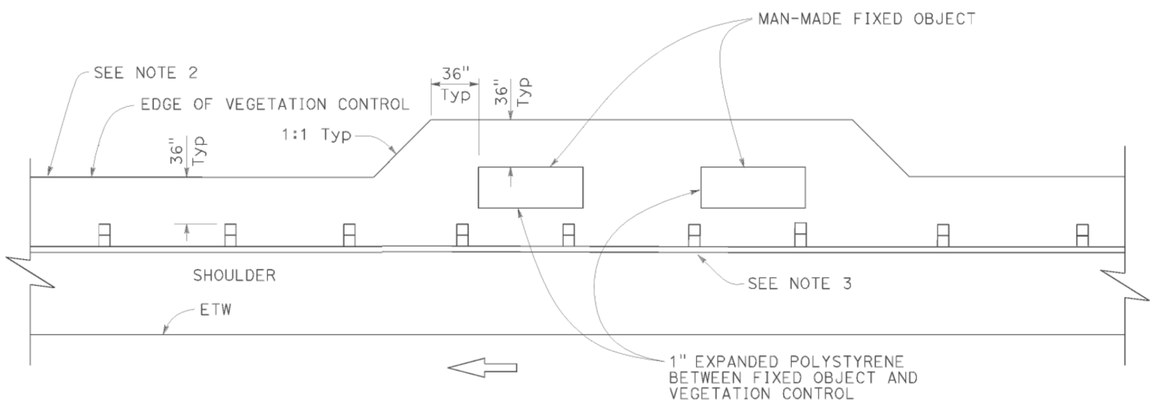

PLAN

Fixed object(s) on shoulder

STATE OF CALIFORNIA
DEPARTMENT OF TRANSPORTATION

MIDWEST GUARDRAIL SYSTEM TYPICAL VEGETATION CONTROL AT FIXED OBJECT

NO SCALE

RSP A77N8 DATED JULY 19, 2013 SUPPLEMENTS THE STANDARD PLANS BOOK DATED 2010.

REVISED STANDARD PLAN RSP A77N8

2010 REVISED STANDARD PLAN RSP A77N8

DATE PLOTTED => 26-JUN-2015
TIME PLOTTED => 09:53

USERNAME => s115152
DGN FILE => 24g820va011.dgn

P:\proj1\02\4G820_plans\pse\24g820va011.dgn

6-12-13

Dist	COUNTY	ROUTE	POST MILES TOTAL PROJECT	SHEET No.	TOTAL SHEETS
02	Sis	5	R10.7/R19.5	288	327

Randell D. Hiatt
REGISTERED CIVIL ENGINEER

November 15, 2013
PLANS APPROVAL DATE

REGISTERED PROFESSIONAL ENGINEER
Randell D. Hiatt
No. C50200
Exp. 6-30-15
CIVIL
STATE OF CALIFORNIA

THE STATE OF CALIFORNIA OR ITS OFFICERS OR AGENTS SHALL NOT BE RESPONSIBLE FOR THE ACCURACY OR COMPLETENESS OF SCANNED COPIES OF THIS PLAN SHEET.

TO ACCOMPANY PLANS DATED 06-23-15

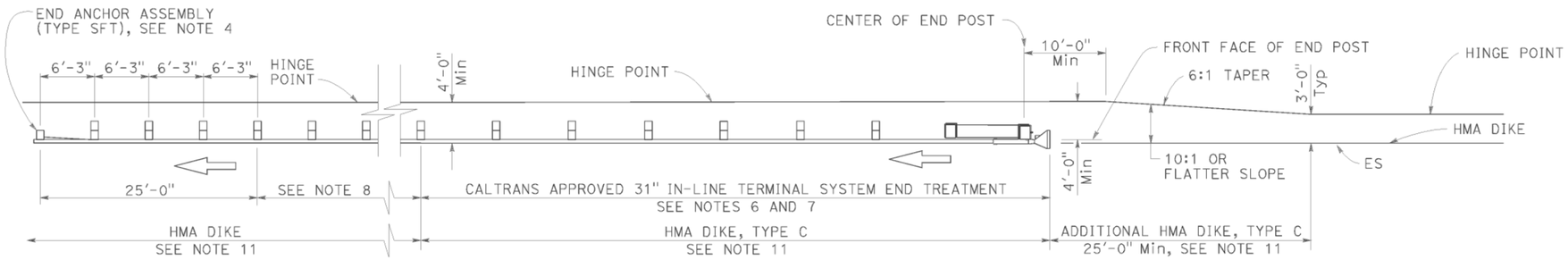

TYPE 11A LAYOUT

(Embankment MGS installation with 31" in-line end treatment at traffic approach end of railing) see Note 5

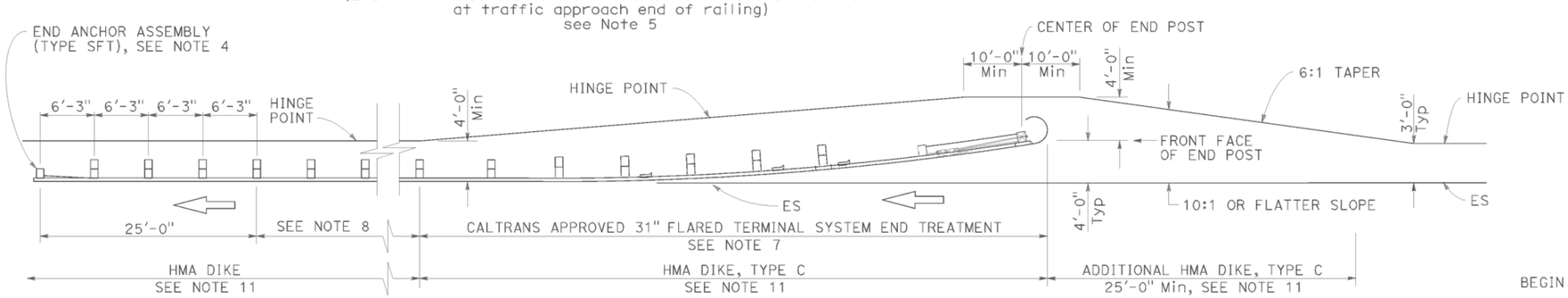

TYPE 11B LAYOUT

(Embankment MGS installation with 31" flared end treatment at traffic approach end of railing) see Note 5

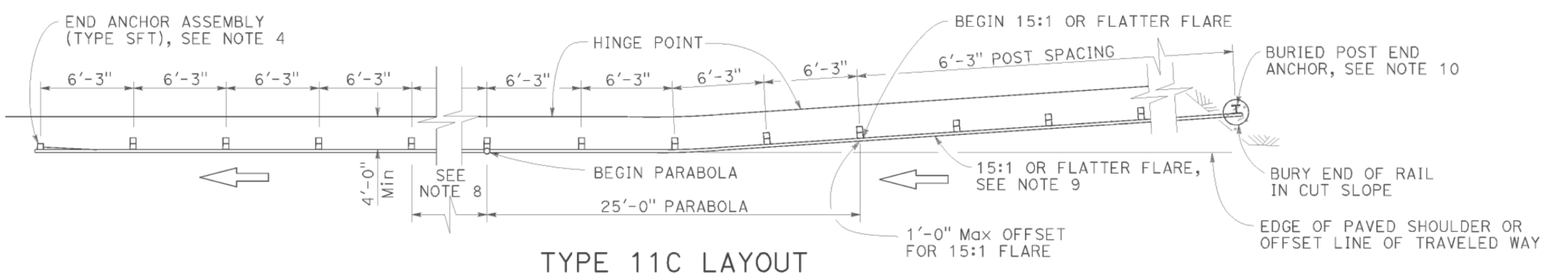

TYPE 11C LAYOUT

(Embankment MGS installation with buried end anchor treatment at traffic approach end of railing) see Notes 5 and 11

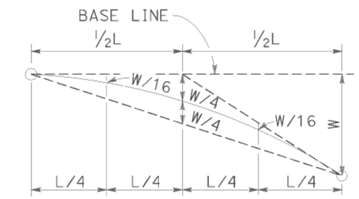

TYPICAL PARABOLIC LAYOUT

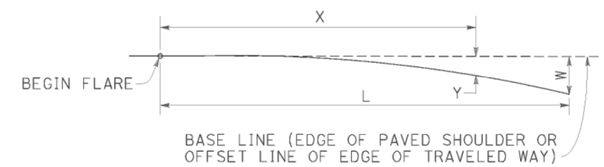

$$Y = \frac{WX^2}{L^2}$$

Y = OFFSET FROM BASE LINE
W = MAXIMUM OFFSET
X = DISTANCE ALONG BASE LINE
L = LENGTH OF FLARE

PARABOLIC FLARE OFFSETS

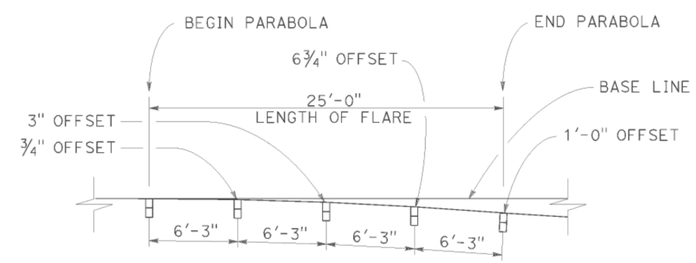

TYPICAL FLARE OFFSETS FOR 1 FOOT Max END OFFSET

NOTES:

1. Line post, blocks and hardware to be used are shown on Revised Standard Plans RSP A77L1, RSP A77L2, RSP A77M1, RSP A77N1 and RSP A77N2.
2. MGS post spacing to be 6'-3" center to center, except as otherwise noted.
3. Except as noted, line posts are 6" x 8" x 6'-0" wood with 6" x 12" x 1'-2" wood blocks. W6 x 8.5 or W6 x 9 steel posts, 6'-0" in length, with 6" x 12" x 1'-2" notched wood blocks or recycled plastic blocks may be used for 6" x 8" x 6'-0" wood post with 6" x 12" x 1'-2" wood blocks where applicable and when specified.
4. For End Anchor Assembly (Type SFT) details, see Revised Standard Plan RSP A77S1.
5. Layout Types 11A, 11B or 11C are typically used where MGS is recommended to shield embankment slopes and a crashworthy end treatment is required for only one direction of traffic.
6. 31" in-line terminal system end treatments are used where site conditions will not accommodate a flared end treatment.
7. The type of 31" terminal system end treatment to be used will be shown on the Project Plans.
8. Dependent on site conditions (embankment height and side slope), construction of additional MGS (length equal to multiples of 12'-6" with 6'-3" post spacing) may be advisable.
9. The 15:1 or flatter flare used with buried end anchors is based on the edge of the paved shoulder or offset line of edge of the traveled way. The length of MGS within the 15:1 or flatter flare is based on site conditions and should be a length equal to multiples of 12'-6".
10. For details of the buried post end anchor used with Type 11C Layout, see Revised Standard Plan RSP A77T2.
11. Where placement of dike is required with MGS installations, see Revised Standard Plan RSP A77N4 for dike positioning details.

STATE OF CALIFORNIA
DEPARTMENT OF TRANSPORTATION

MIDWEST GUARDRAIL SYSTEM TYPICAL LAYOUTS FOR EMBANKMENTS

NO SCALE

RSP A77P1 DATED NOVEMBER 15, 2013 SUPERSEDES RSP A77P1 DATED JULY 19, 2013 THAT SUPPLEMENTS THE STANDARD PLANS BOOK DATED 2010.

REVISED STANDARD PLAN RSP A77P1

2010 REVISED STANDARD PLAN RSP A77P1

DATE PLOTTED => 26-JUN-2015
TIME PLOTTED => 09:53

Dist	COUNTY	ROUTE	POST MILES TOTAL PROJECT	SHEET No.	TOTAL SHEETS
02	Sis	5	R10.7/R19.5	289	327

Randell D. Hiatt
REGISTERED CIVIL ENGINEER

August 14, 2015
PLANS APPROVAL DATE

REGISTERED PROFESSIONAL ENGINEER
Randell D. Hiatt
No. C50200
Exp. 6-30-17
CIVIL
STATE OF CALIFORNIA

THE STATE OF CALIFORNIA OR ITS OFFICERS OR AGENTS SHALL NOT BE RESPONSIBLE FOR THE ACCURACY OR COMPLETENESS OF SCANNED COPIES OF THIS PLAN SHEET.

TO ACCOMPANY PLANS DATED 06-23-15

2010 REVISED STANDARD PLAN RSP A77Q1

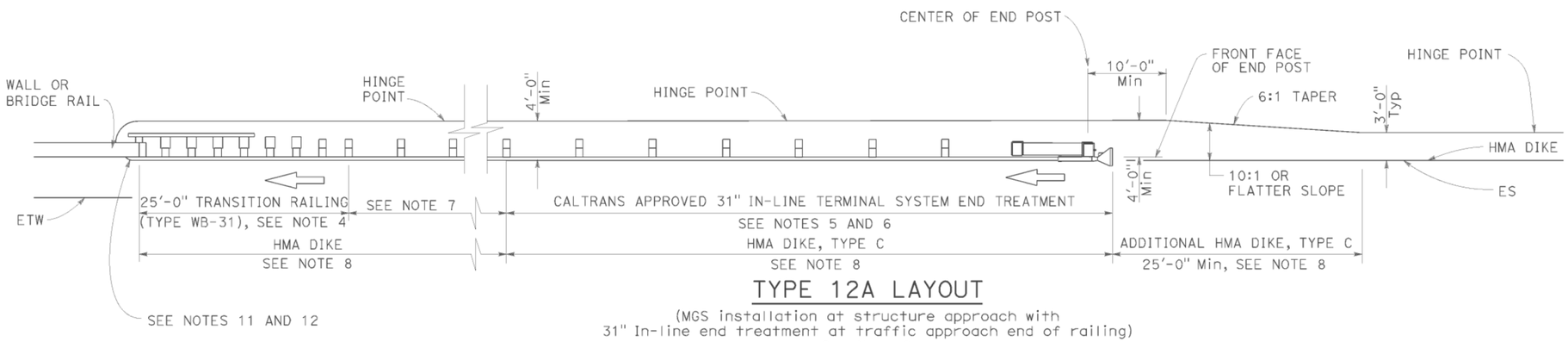

TYPE 12A LAYOUT

(MGS installation at structure approach with
31" In-line end treatment at traffic approach end of railing)
See Note 9

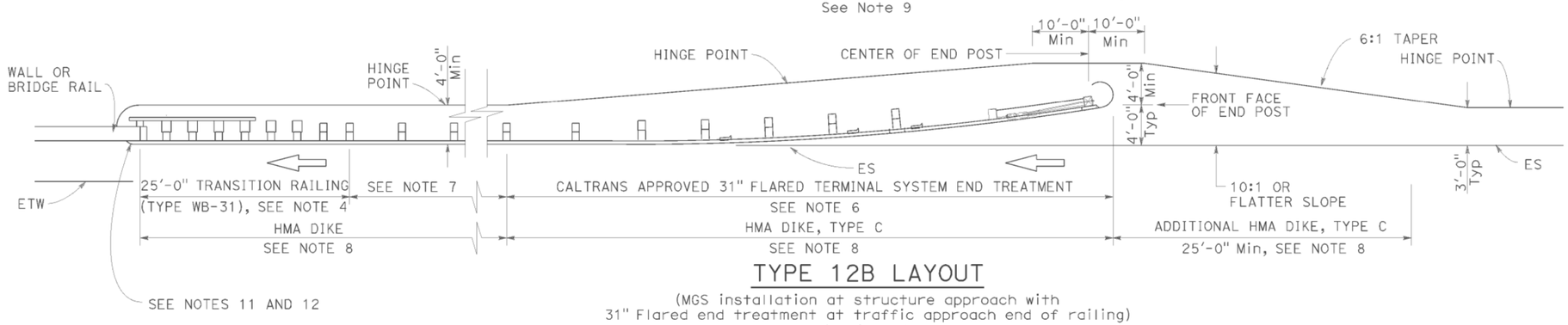

TYPE 12B LAYOUT

(MGS installation at structure approach with
31" Flared end treatment at traffic approach end of railing)
See Note 9

NOTES:

1. Line post, blocks and hardware to be used are shown on Revised Standard Plans RSP A77L1, RSP A77L2, RSP A77M1, RSP A77N1 and RSP A77N2.
2. MGS post spacing to be 6'-3" center to center, except as otherwise noted.
3. Except as noted, line posts are 6" x 8" x 6'-0" wood with 6" x 12" x 1'-2" wood blocks. W6 x 8.5 or W6 x 9 steel posts, 6'-0" in length, with 6" x 12" x 1'-2" notched wood blocks or plastic blocks may be used for 6" x 8" x 6'-0" wood posts with 6" x 12" x 1'-2" wood blocks where applicable and when specified.
4. For Transition Railing (Type WB-31) details for Types 12A and 12B Layouts, see Revised Standard Plan RSP A77U4.
5. 31" in-line terminal system end treatments are used where site conditions will not accommodate a 31" flared end treatment.
6. The type of 31" terminal system end treatment to be used will be shown on the Project Plans.
7. Dependent on site conditions (embankment height, side slopes, or other fixed objects), it may be advisable to construct additional guard railing (a length equal to multiples of 12'-6" with 6'-3" post spacing) between the transition railing and end treatment. A 12.5 degree angle of departure can be drawn on the Project Plans from the edge of traveled way through the outer most point of the fixed object to determine the additional length of railing needed.
8. Where placement of dike is required with guard railing installations, see Revised Standard Plan RSP A77N4 for dike positioning details.
9. Type 12A or Type 12B Layouts are typically used:
   a. To the right of approaching traffic, at the end of a structure, on two-lane conventional highway where the roadbed width across the structure is less than 40 feet.
   b. To the left of approaching traffic, at the end of a structure, on two-lane conventional highway where the roadbed width across the structure is less than 40 feet.
   c. To the right of approaching traffic at the end of each structure on multilane freeways or expressways with separate adjacent or parallel bridges.
   d. To the right of approaching traffic at the end of the structure on multilane freeways or expressways with decked median on the bridge.
10. See Revised Standard Plan RSP A77Q3 for typical layout used left of approaching traffic at the ends of each structure on multilane freeways or expressways with separate adjacent or parallel bridges.
11. For additional details of typical connections to bridge rail, see Connection Detail AA on Revised Standard Plans RSP A77U1 and RSP A77U2 and Connection Detail FF on Revised Standard Plans RSP A77V1 and RSP A77V2.
12. For additional details of a typical connection to walls or abutments, see Revised Standard Plan RSP A77U3.

STATE OF CALIFORNIA
DEPARTMENT OF TRANSPORTATION

MIDWEST GUARDRAIL SYSTEM TYPICAL LAYOUTS FOR STRUCTURE APPROACH

NO SCALE

RSP A77Q1 DATED AUGUST 14, 2015 SUPERSEDES RSP A77Q1 DATED JULY 19, 2013 THAT SUPPLEMENTS THE STANDARD PLANS BOOK DATED 2010.

REVISED STANDARD PLAN RSP A77Q1

DATE PLOTTED => 28-AUG-2015
TIME PLOTTED => 09:34

Dist	COUNTY	ROUTE	POST MILES TOTAL PROJECT	SHEET No.	TOTAL SHEETS
02	Sis	5	R10.7/R19.5	290	327

Randell D. Hiatt
REGISTERED CIVIL ENGINEER

August 14, 2015
PLANS APPROVAL DATE

REGISTERED PROFESSIONAL ENGINEER
Randell D. Hiatt
No. C50200
Exp. 6-30-17
CIVIL
STATE OF CALIFORNIA

THE STATE OF CALIFORNIA OR ITS OFFICERS OR AGENTS SHALL NOT BE RESPONSIBLE FOR THE ACCURACY OR COMPLETENESS OF SCANNED COPIES OF THIS PLAN SHEET.

TO ACCOMPANY PLANS DATED 06-23-15

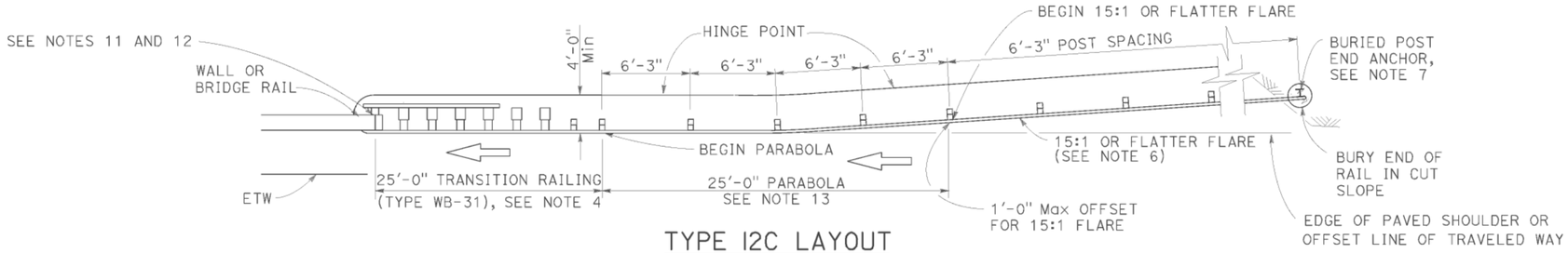

TYPE 12C LAYOUT

(MGS installation at structure approach with a Buried end anchor treatment at traffic approach end of railing)
See Notes 8 and 9

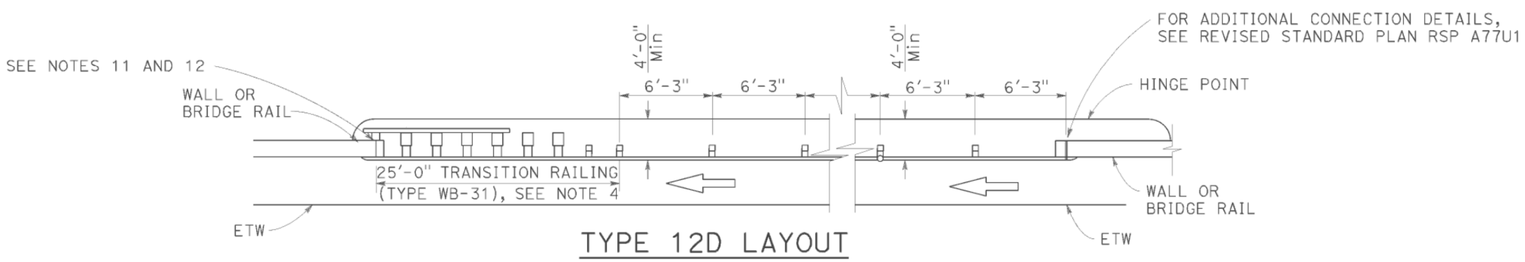

TYPE 12D LAYOUT

(Continuous MGS installation between structures)
See Notes 5 and 9

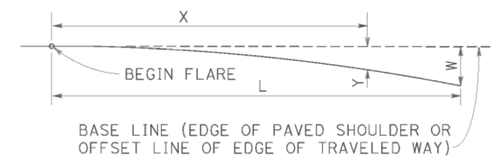

$$Y = \frac{WX^2}{L^2}$$

Y = OFFSET FROM BASE LINE
W = MAXIMUM OFFSET
X = DISTANCE ALONG BASE LINE
L = LENGTH OF FLARE

PARABOLIC FLARE OFFSETS

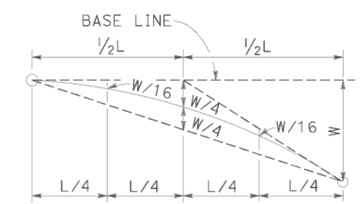

TYPICAL PARABOLIC LAYOUT

NOTES:

1. Line post, blocks and hardware to be used are shown on Revised Standard Plans RSP A77L1, RSP A77L2, RSP A77M1, RSP A77N1 and RSP A77N2.
2. MGS post spacing to be 6'-3" center to center, except as otherwise noted.
3. Except as noted, line posts are 6" x 8" x 6'-0" m wood with 6" x 12" x 1'-2" wood blocks. W6 x 8.5 or W6 x 9 steel posts, 6'-0" in length, with 6" x 12" x 1'-2" notched wood blocks or plastic blocks may be used for 6" x 8" x 6'-0" wood posts with 6" x 12" x 1'-2" wood blocks where applicable and when specified.
4. For Transition Railing (Type WB-31) details for Types 12C and 12D Layouts, see Revised Standard Plan RSP A77U4.
5. Type 12D layout is typically used where continous MGS is recommended between structures.
6. The 15:1 or flatter flare for Type 12C Layout is based on the edge of the paved shoulder or offset line of edge of the traveled way. The length of MGS with the 15:1 or flatter flare is based on site conditions and should be a length equal to multiples of 12'-6".
7. For details of the buried post end anchor used with Type 12C Layout, see Revised Standard Plan RSP A77T2.
8. Where placement of dike is required with MGS installations, see Revised Standard Plan RSP A77N4 for dike positioning details.
9. Type 12C Layout is typically used:
   a. To the right of approaching traffic, at the end of the structure, on two-lane conventional highway where the roadbed width across the structure is less than 40 feet.
   b. To the left of approaching traffic, at each of a structure, on two-lane conventional highway where the roadbed width across the structure is less than 40 feet.
   c. To the right of approaching traffic at the end of each structure on multilane freeways or expressways with separate adjacent or parallel bridges.
   d. To the right of approaching traffic at the end of the structure on multilane freeways or expressways with decked median on the bridge.
10. See Revised Standard Plan RSP A77Q3 for typical layout used left of approaching traffic at the ends of each structure on multilane freeways or expressways with separate adjacent or parallel bridges.
11. For additional details of typical connections to bridge rail, see Connection Detail AA on Revised Standard Plans RSP A77U1 and RSP A77U2 and Connection Detail FF on Revised Standard Plans RSP A77V1 and RSP A77V2.
12. For additional details of a typical connection to walls or abutments, see Revised Standard Plan RSP A77U3.
13. For typical flare offsets for 25'-0" length parabola with maximum offset of 1'-0", see Revised Standard Plan RSP A77P1.

STATE OF CALIFORNIA
DEPARTMENT OF TRANSPORTATION

MIDWEST GUARDRAIL SYSTEM TYPICAL LAYOUTS FOR STRUCTURE APPROACH AND BETWEEN STRUCTURES

NO SCALE

RSP A77Q2 DATED AUGUST 14, 2015 SUPERSEDES RSP A77Q2 DATED JULY 19, 2013 THAT SUPPLEMENTS THE STANDARD PLANS BOOK DATED 2010.

REVISED STANDARD PLAN RSP A77Q2

2010 REVISED STANDARD PLAN RSP A77Q2

DATE PLOTTED => 28-AUG-2015
TIME PLOTTED => 09:34

Dist	COUNTY	ROUTE	POST MILES TOTAL PROJECT	SHEET No.	TOTAL SHEETS
02	Sis	5	R10.7/R19.5	291	327

Randell D. Hiatt
REGISTERED CIVIL ENGINEER

August 14, 2015
PLANS APPROVAL DATE

REGISTERED PROFESSIONAL ENGINEER
Randell D. Hiatt
No. C50200
Exp. 6-30-17
CIVIL
STATE OF CALIFORNIA

THE STATE OF CALIFORNIA OR ITS OFFICERS OR AGENTS SHALL NOT BE RESPONSIBLE FOR THE ACCURACY OR COMPLETENESS OF SCANNED COPIES OF THIS PLAN SHEET.

TO ACCOMPANY PLANS DATED 06-23-15

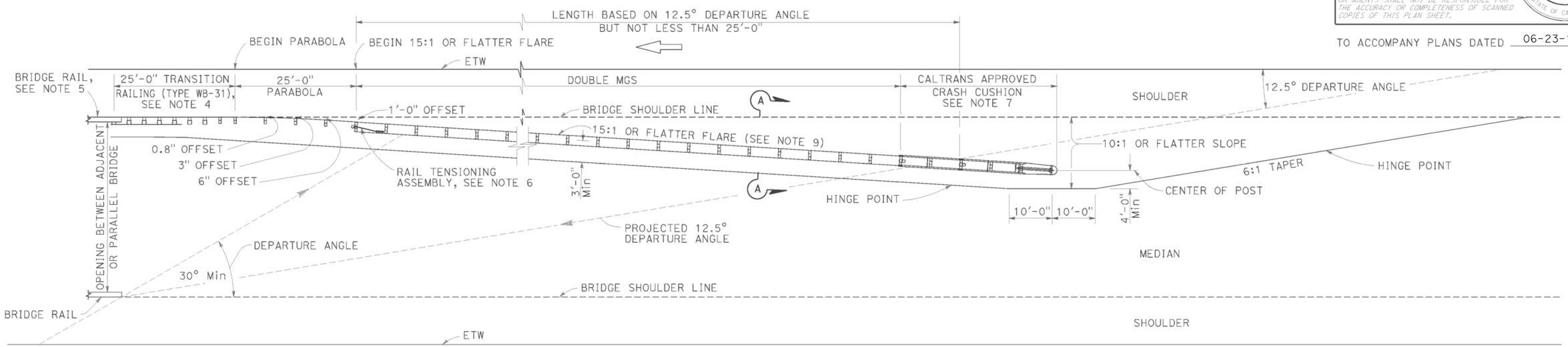

TYPE 12E LAYOUT

See Note 9

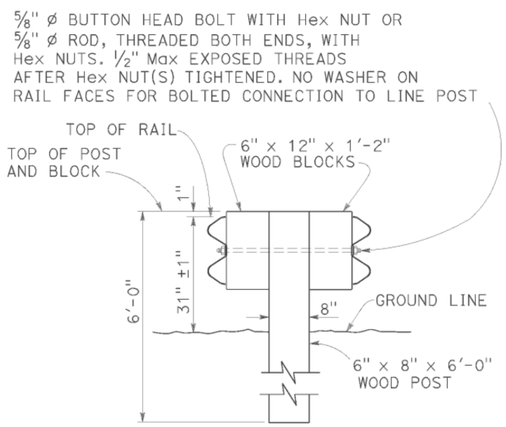

SECTION A-A
TYPICAL DOUBLE MIDWEST GUARDRAIL SYSTEM

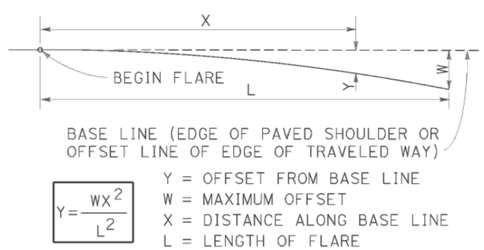

$$Y = \frac{WX^2}{L^2}$$

Y = OFFSET FROM BASE LINE
W = MAXIMUM OFFSET
X = DISTANCE ALONG BASE LINE
L = LENGTH OF FLARE

PARABOLIC FLARE OFFSETS

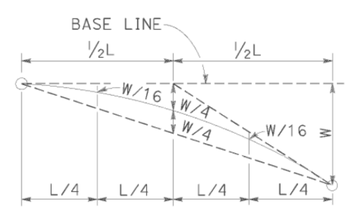

TYPICAL PARABOLIC LAYOUT

NOTES:

1. Line post, blocks and hardware to be used are shown on Revised Standard Plans RSP A77L1, RSP A77L2, RSP A77M1, RSP A77N1 and RSP A77N2.
2. MGS post spacing to be 6'-3" center to center, except as otherwise noted.
3. Except as noted, line posts are 6" x 8" x 6'-0" wood with 6" x 12" x 1'-2" wood blocks. W6 x 8.5 or W6 x 9 steel posts, 6'-0" in length, with 6" x 12" x 1'-2" notched wood blocks or notched recycled plastic blocks may be used for 6" x 8" x 6'-0" wood line posts with 6" x 12" x 1'-2" wood blocks where applicable and when specified.
4. For Transition Railing (Type WB-31) details, see Revised Standard Plan RSP A77U4.
5. For additional details of a typical connection to bridge rail, see Connection Detail AA on Revised Standard Plan RSP A77U1.
6. For Rail Tensioning Assembly details, see Revised Standard Plan RSP A77S2.
7. The type of Crash Cushion to be used will be shown on the Project Plans.
8. Type 12E Layout is typically used left of approaching traffic at the end of each structure on multilane freeways or expressways where a median type barrier is not constructed between separated roadbeds.
9. The 15:1 or flatter flare is measured off of the edge of traveled way.

STATE OF CALIFORNIA
DEPARTMENT OF TRANSPORTATION

MIDWEST GUARDRAIL SYSTEM TYPICAL LAYOUTS FOR STRUCTURE APPROACH

NO SCALE

RSP A77Q3 DATED AUGUST 14, 2015 SUPERSEDES RSP A77Q3 DATED JULY 19, 2013 THAT SUPPLEMENTS THE STANDARD PLANS BOOK DATED 2010.

REVISED STANDARD PLAN RSP A77Q3

2010 REVISED STANDARD PLAN RSP A77Q3

DATE PLOTTED => 28-AUG-2015
TIME PLOTTED => 09:34

Dist	COUNTY	ROUTE	POST MILES TOTAL PROJECT	SHEET No.	TOTAL SHEETS
02	Sis	5	R10.7/R19.5	292	327

Randell D. Hiatt
REGISTERED CIVIL ENGINEER

August 14, 2015
PLANS APPROVAL DATE

REGISTERED PROFESSIONAL ENGINEER
Randell D. Hiatt
No. C50200
Exp. 6-30-17
CIVIL
STATE OF CALIFORNIA

THE STATE OF CALIFORNIA OR ITS OFFICERS OR AGENTS SHALL NOT BE RESPONSIBLE FOR THE ACCURACY OR COMPLETENESS OF SCANNED COPIES OF THIS PLAN SHEET.

TO ACCOMPANY PLANS DATED 06-23-15

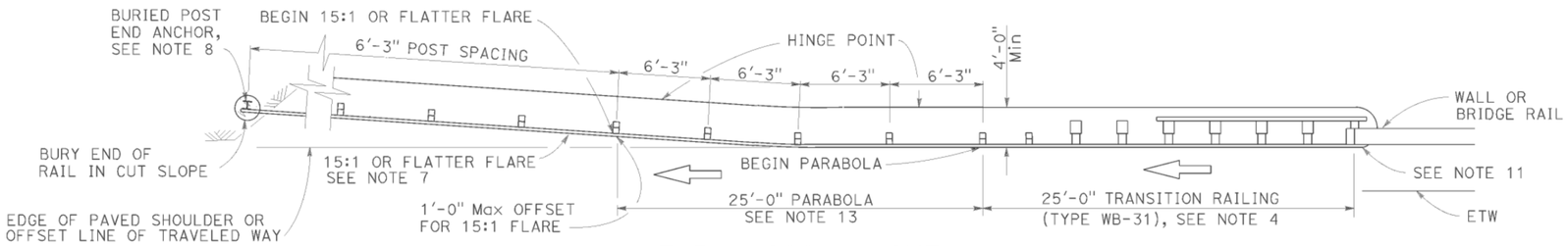

TYPE 12CC LAYOUT

(MGS installation at structure departure with a Buried end anchor treatment at trailing end of railing)
See Notes 9 and 10

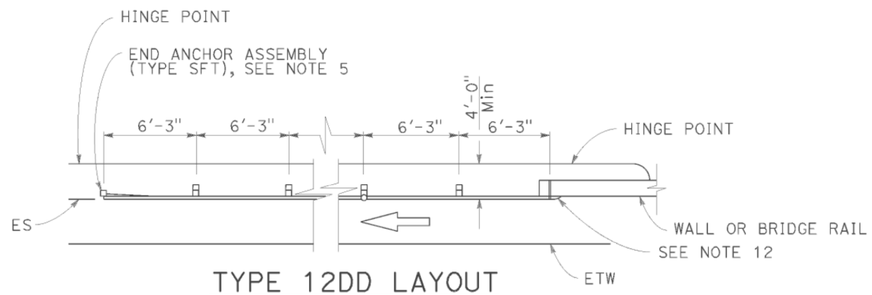

TYPE 12DD LAYOUT

(MGS installation at structure departure With end anchor assembly at trailing end of railing)
See Notes 6 and 9

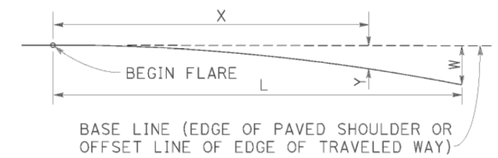

$$Y = \frac{WX^2}{L^2}$$

Y = OFFSET FROM BASE LINE
W = MAXIMUM OFFSET
X = DISTANCE ALONG BASE LINE
L = LENGTH OF FLARE

PARABOLIC FLARE OFFSETS

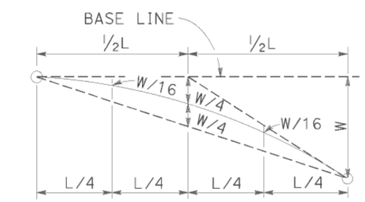

TYPICAL PARABOLIC LAYOUT

NOTES:

1. Line post, blocks and hardware to be used are shown on Revised Standard Plans RSP A77L1, RSP A77L2, RSP A77M1, RSP A77N1 and RSP A77N2.
2. MSG post spacing to be 6'-3" center to center, except as otherwise noted.
3. Except as noted, line posts are 6" x 8" x 6'-0" wood with 6" x 12" x 1'-2" wood blocks. W6 x 8.5 or W6 x 9 steel posts, 6'-0" in length, with 6" x 12" x 1'-2" notched wood blocks or notched recycled plastic blocks may be used for 6" x 8" x 6'-0" wood line posts with 6" x 12" x 1'-2" wood blocks where applicable and when specified.
4. For Transition Railing (Type WB-31) details for Type 12CC Layout, see Revised Standard Plan RSP A77U4.
5. For details of End Anchor Assembly (Type SFT) used with Type 12DD Layout, see Revised Standard Plan RSP A77S1.
6. Type 12DD layout is typically used to the right of traffic departing a structure on two-way conventional highways where the roadbed width across the structure is equal to or greater than 40 feet and MGS is recommended (embankment height, side slopes, other fixed objects). Length of railing to be equal to multiples of 12'-6". For MGS connection details to bridge rail, see Revised Standard Plans RSP A77U1 and RSP A77V1. For MGS connection details to wall, see Revised Standard Plan RSP A77U3.
7. The 15:1 or flatter flare for Type 12CC Layout is based on the edge of the paved shoulder or offset line of edge of the traveled way. The length of MGS within the 15:1 or flatter flare is based on site conditions and should be a length equal to multiples of 12'-6".
8. For details of the buried post end anchor used with Type 12CC Layout, see Revised Standard Plan RSP A77T2.
9. Where placement of dike is required with MGS installations, see Revised Standard Plan RSP A77N4 for dike positioning details.
10. Type 12CC Layout is typically used to the right of traffic departing a structure on two-way conventional highways where the roadbed width across the structure is less than 40 feet.
11. For additional details of a typical connection to bridge rail for Layout Type 12CC, see Connection Detail CC on Revised Standard Plan RSP A77U2 and Connection Detail HH on Revised Standard Plan RSP A77V2.
12. For additional details of a typical connection to bridge rail for Layout Type 12DD, see Connection Detail BB on Revised Standard Plan RSP A77U1 and Connection Detail GG on Revised Standard Plan RSP A77V1.
13. For typical flare offsets for 25'-0" length parabola with maximum offset of 1'-0", see Revised Standard Plan RSP A77P1.

STATE OF CALIFORNIA
DEPARTMENT OF TRANSPORTATION

MIDWEST GUARDRAIL SYSTEM TYPICAL LAYOUTS FOR STRUCTURE DEPARTURE

NO SCALE

RSP A77Q5 DATED AUGUST 14, 2015 SUPERSEDES RSP A77Q5 DATED JULY 19, 2013 THAT SUPPLEMENTS THE STANDARD PLANS BOOK DATED 2010.

REVISED STANDARD PLAN RSP A77Q5

2010 REVISED STANDARD PLAN RSP A77Q5

DATE PLOTTED => 28-AUG-2015
TIME PLOTTED => 09:34

Dist	COUNTY	ROUTE	POST MILES TOTAL PROJECT	SHEET No.	TOTAL SHEETS
02	Sis	5	R10.7/R19.5	293	327

Randell D. Hiatt
REGISTERED CIVIL ENGINEER

August 14, 2015
PLANS APPROVAL DATE

REGISTERED PROFESSIONAL ENGINEER — Randell D. Hiatt No. C50200 Exp. 6-30-17 CIVIL — STATE OF CALIFORNIA

THE STATE OF CALIFORNIA OR ITS OFFICERS OR AGENTS SHALL NOT BE RESPONSIBLE FOR THE ACCURACY OR COMPLETENESS OF SCANNED COPIES OF THIS PLAN SHEET.

TO ACCOMPANY PLANS DATED 06-23-15

NOTES:

1. Line post, blocks and hardware to be used are shown on Revised Standard Plans RSP A77L1, RSP A77L2, RSP A77M1, RSP A77N1, and RSP A77N2.
2. MGS post spacing to be 6'-3" center to center, except as otherwise noted.
3. Except as noted, line posts are 6" x 8" x 6'-0" wood with 6" x 12" x 1'-2" wood blocks. W6 x 8.5 or W6 x 9 steel posts, 6'-0" in length, with 6" x 12" x 1'-2" notched wood blocks or notched recycled plastic blocks may be used for 6" x 8" x 6'-0" wood line posts with 6" x 12" x 1'-2" wood blocks where applicable and when specified.
4. A 4'-0" minimum clearance is required between the face of the railing and the face of a fixed object located directly behind MGS sections with post spacing of 6'-3". Construct MGS as shown in the detail "Strengthened Midwest Guardrail System Sections for Fixed Object" on this plan, where the clearance between the face of the railing and the face of a fixed object is less than 4'-0", but not less than 3'-0". Where the clearance is less than 3'-0", a concrete wall or barrier should be constructed to shield the fixed object(s).
5. For End Anchor Assembly (Type SFT) details, see Revised Standard Plan RSP A77S1.
6. For details of Rail Tensioning Assembly, see Revised Standard Plan RSP A77S2.
7. The type of crash cushion to be used will be shown on the Project Plans.
8. Type 14A layout is typically used on multilane freeways or expressways to shield fixed objects where a median type barrier is not constructed between the separated roadbeds.
9. For typical flare offsets for 25'-0" length parabola with maximum offset of 1'-0", see Revised Standard Plan RSP A77P1.
10. The 15:1 or flatter flare is measured off of the edge of traveled way.
11. W6 x 15 steel post, 8'-0" in length, with 8" x 12" x 1'-2" notched wood block or notched recycled plastic block may be used in place of the 10" x 10" x 8'-0" wood post with 8" x 12" x 1'-2" wood block shown in the detail "Strengthened Midwest Guardrail System Sections for Fixed Object".

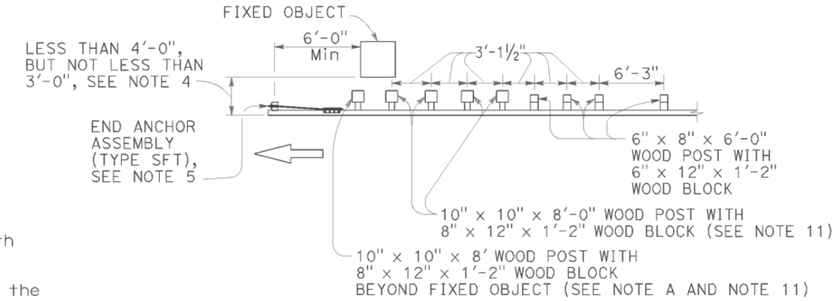

NOTE A: For a series of fixed objects (bridge columns, overhead sign supports, etc.) additional 10" x 10" x 8'-0" wood post with 8" x 12" x 1'-2" wood blocks at 3'-1½" center to center spacing are to be used between fixed objects.

STRENGTHENED MIDWEST GUARDRAIL SYSTEM SECTIONS FOR FIXED OBJECT

Use strengthened MGS sections with Type 14A layout where minimum clearance between the face of the railing and fixed object(s) is less than 4'-0", but not less than 3'-0", See Note 4.

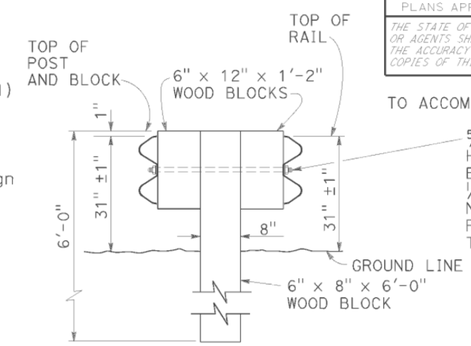

⅝" ø BUTTON HEAD BOLT WITH Hex NUT OR ⅝" ø ROD, THREADED BOTH ENDS, WITH Hex NUTS. ½" Max EXPOSED THREADS AFTER Hex NUT(S) TIGHTENED. NO WASHER ON RAIL FACES FOR BOLTED CONNECTION TO LINE POST

SECTION A-A
TYPICAL DOUBLE MIDWEST GUARDRAIL SYSTEM

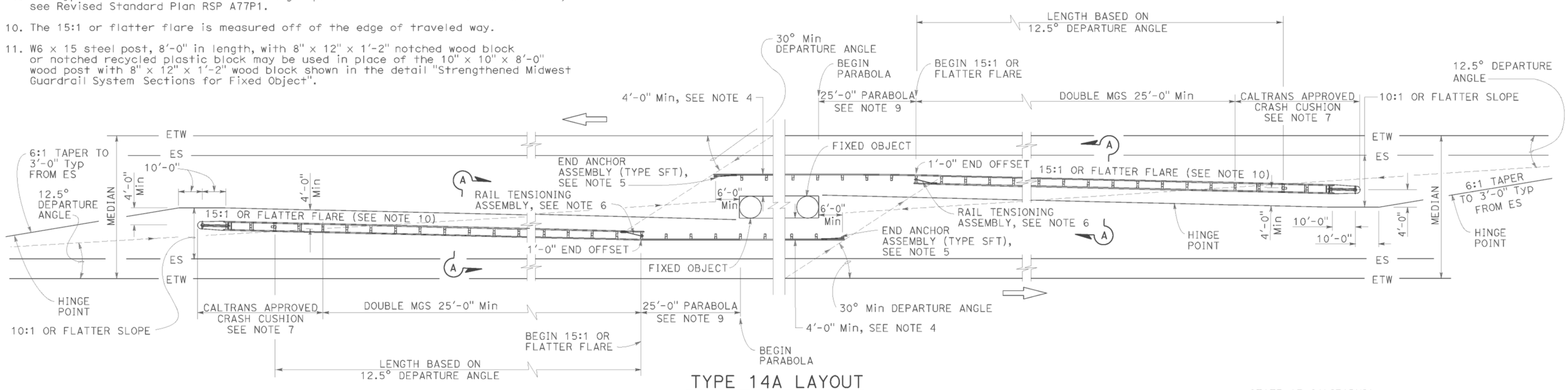

TYPE 14A LAYOUT

See Note 8

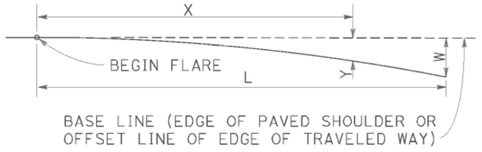

$$Y = \frac{WX^2}{L^2}$$

Y = OFFSET FROM BASE LINE
W = MAXIMUM OFFSET
X = DISTANCE ALONG BASE LINE
L = LENGTH OF FLARE

PARABOLIC FLARE OFFSETS

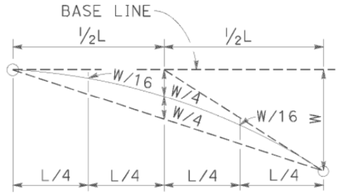

TYPICAL PARABOLIC LAYOUT

STATE OF CALIFORNIA
DEPARTMENT OF TRANSPORTATION

MIDWEST GUARDRAIL SYSTEM TYPICAL LAYOUTS FOR FIXED OBJECTS BETWEEN SEPARATE ROADBEDS (TWO-WAY TRAFFIC)

NO SCALE

RSP A77R1 DATED AUGUST 14, 2015 SUPERSEDES RSP A77R1 DATED JULY 19, 2013 THAT SUPPLEMENTS THE STANDARD PLANS BOOK DATED 2010.

REVISED STANDARD PLAN RSP A77R1

2010 REVISED STANDARD PLAN RSP A77R1

DATE PLOTTED => 28-AUG-2015
TIME PLOTTED => 09:34

Dist	COUNTY	ROUTE	POST MILES TOTAL PROJECT	SHEET No.	TOTAL SHEETS
02	Sis	5	R10.7/R19.5	294	327

Randell D. Hiatt
REGISTERED CIVIL ENGINEER

July 19, 2013
PLANS APPROVAL DATE

REGISTERED PROFESSIONAL ENGINEER
Randell D. Hiatt
No. C50200
Exp. 6-30-15
CIVIL
STATE OF CALIFORNIA

THE STATE OF CALIFORNIA OR ITS OFFICERS OR AGENTS SHALL NOT BE RESPONSIBLE FOR THE ACCURACY OR COMPLETENESS OF SCANNED COPIES OF THIS PLAN SHEET.

TO ACCOMPANY PLANS DATED 06-23-15

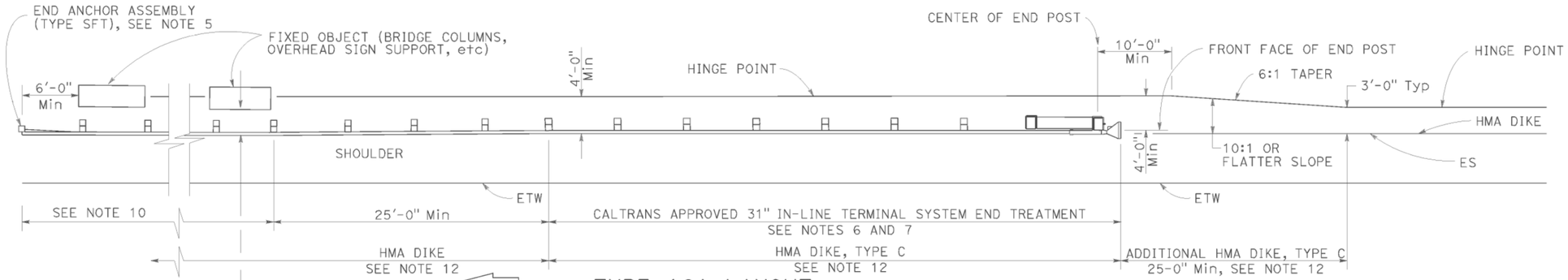

TYPE 16A LAYOUT

(MGS installation at roadside fixed object or objects with 31" in-line end treatment at traffic approach end of railing)
See Notes 11 and 12

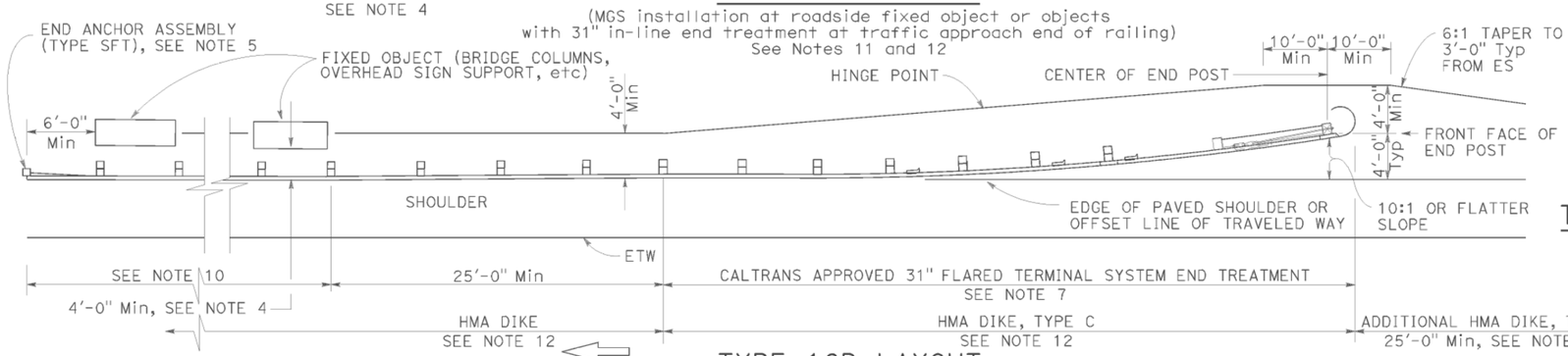

TYPE 16B LAYOUT

(MGS installation at roadside fixed object or objects with 31' flared end treatment at traffic approach end of railing)
See Notes 11 and 12

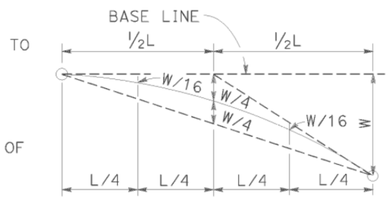

TYPIC AL PARABOLIC LAYOUT

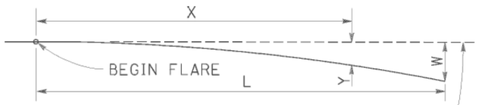

BASE LINE (EDGE OF PAVED SHOULDER OR OFFSET LINE OF EDGE OF TRAVELED WAY)

$$Y = \frac{WX^2}{L^2}$$

Y = OFFSET FROM BASE LINE
W = MAXIMUM OFFSET
X = DISTANCE ALONG BASE LINE
L = LENGTH OF FLARE

PARABOLIC FLARE OFFSETS

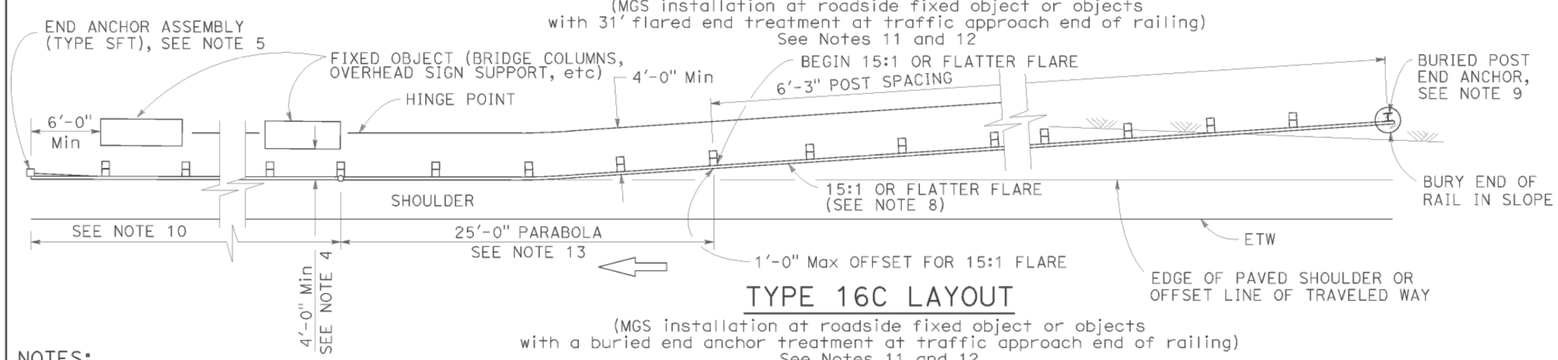

TYPE 16C LAYOUT

(MGS installation at roadside fixed object or objects with a buried end anchor treatment at traffic approach end of railing)
See Notes 11 and 12

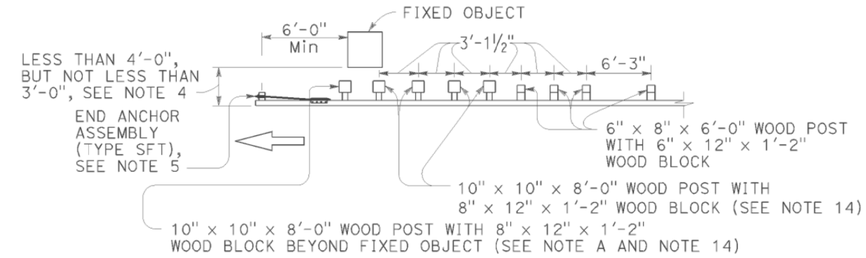

NOTE A: For a series of fixed objects (bridge columns, overhead sign supports, etc.) additional 10" x 10" x 8'-0" wood post with 8" x 12" x 1'-2" wood blocks at 3'-1½" center to center spacing are to be used between fixed objects.

STRENGTHENED MIDWEST GUARDRAIL SYSTEM SECTIONS FOR FIXED OBJECT

Use strengthened MGS sections with Types 16A, 16B or 16C layouts where minimum clearance between the face of the railing and fixed object(s) is less than 4'-0", but not less than 3'-0". See Note 4

NOTES:

1. Line post, blocks and hardware to be used are shown on Revised Standard Plans RSP A77L1, RSP A77L2, RSP A77M1, RSP A77N1 and RSP A77N2.
2. MGS post spacing to be 6'-3" center to center, except as otherwise noted.
3. Except as noted, line posts are 6" x 8" x 6'-0" wood with 6" x 12" x 1'-2" wood blocks. W6 x 8.5 or W6 x 9 steel posts, 6'-0" in length, with 6" x 12" x 1'-2" notched wood blocks or notched recycled plastic blocks may be used for 6" x 8" x 6'-0" wood line posts with 6" x 12" x 1'-2" wood blocks where applicable and when specified.
4. A 4'-0" minimum clearance is required between the face of the railing and the face of a fixed object located directly behind MGS sections with post spacing of 6'-3". Construct MGS as shown in the detail "Strengthened Midwest Guardrail System Sections for Fixed Object" on this plan, where the clearance between the face of the railing and the face of a fixed object is less than 4'-0", but not less than 3'-0". Where the clearance is less than 3'-0", a concrete wall or barrier should be constructed to shield the fixed object(s).
5. For End Anchor Assembly (Type SFT) details, see Revised Standard Plan RSP A77S1.
6. 31" in-line terminal system end treatments are used where site conditions will not accommodate a 31" flared end treatment.
7. The type of 31" terminal system to be used will be shown on the Project Plans.
8. The 15:1 or flatter flare used with Type 16C Layout is based on the edge of the paved shoulder or offset line of edge of the traveled way. The length of MGS within the 15:1 or flatter flare is based on site conditions and should be a length equal to multiples of 12'-6".
9. For details of the Buried Post End Anchor used with Type 16C Layout, see Revised Standard Plan RSP A77T2.
10. As site conditions dictate, construct additional MGS to shield fixed object(s). Additional MGS length equal to multiples of 12'-6". Post spacing at 6'-3" except as specified in Note 4.
11. Layout Types 16A, 16B or 16C are typically used where MGS is recommended to shield roadside fixed object(s) and a crashworthy 31" end treatment is required for only one direction of traffic.
12. Where placement of dike is required with MGS, see Revised Standard Plan RSP A77N4 for dike positioning details.
13. For typical flare offsets for 25'-0" length parabola with maximum offset of 1'-0", see Revised Standard Plan RSP A77P1.
14. W6 x 15 steel post, 8'-0" in length, with 8" x 12" x 1'-2" notched wood block or notched recycled plastic blocks may be used in place of the 10" x 10" x 8'-0" wood post with 8" x 12" x 1'-2" wood block shown in the detail "Strengthened Midwest Guardrail System Sections for Fixed Object".

STATE OF CALIFORNIA
DEPARTMENT OF TRANSPORTATION

MIDWEST GUARDRAIL SYSTEM TYPICAL LAYOUTS FOR ROADSIDE FIXED OBJECTS

NO SCALE

RSP A77R3 DATED JULY 19, 2013 SUPPLEMENTS THE STANDARD PLANS BOOK DATED 2010.

REVISED STANDARD PLAN RSP A77R3

2010 REVISED STANDARD PLAN RSP A77R3

DATE PLOTTED => 26-JUN-2015
TIME PLOTTED => 09:54

Dist	COUNTY	ROUTE	POST MILES TOTAL PROJECT	SHEET No.	TOTAL SHEETS
02	Sis	5	R10.7/R19.5	295	327

REGISTERED CIVIL ENGINEER

July 18, 2014
PLANS APPROVAL DATE

Glenn DeCou No. C34547 Exp. 9-30-15 CIVIL — REGISTERED PROFESSIONAL ENGINEER — STATE OF CALIFORNIA

THE STATE OF CALIFORNIA OR ITS OFFICERS OR AGENTS SHALL NOT BE RESPONSIBLE FOR THE ACCURACY OR COMPLETENESS OF SCANNED COPIES OF THIS PLAN SHEET.

TO ACCOMPANY PLANS DATED 06-23-15

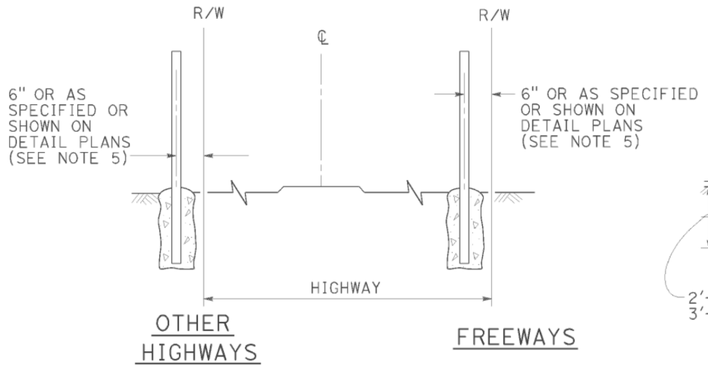

FENCE LOCATION

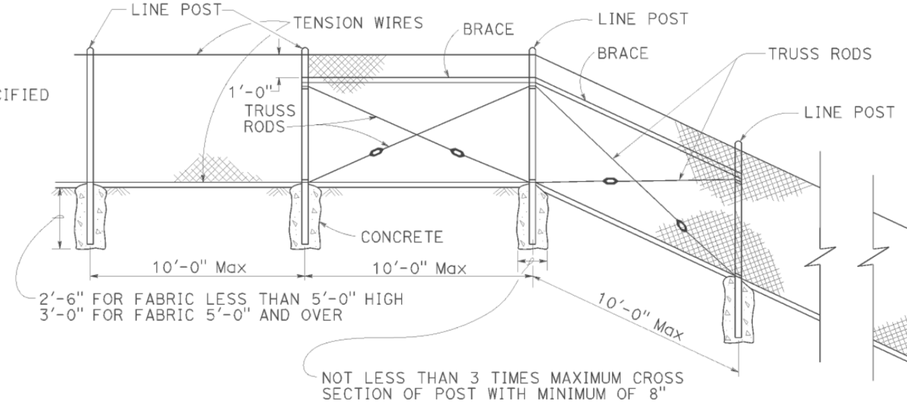

CHAIN LINK FENCE ON SHARP BREAK IN GRADE

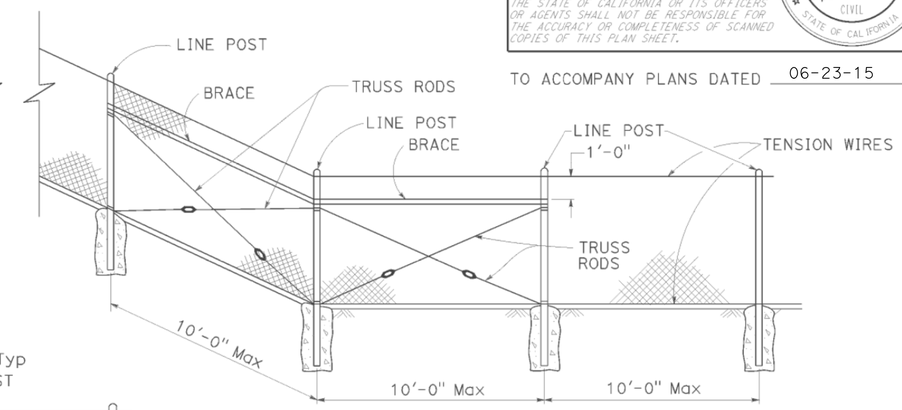

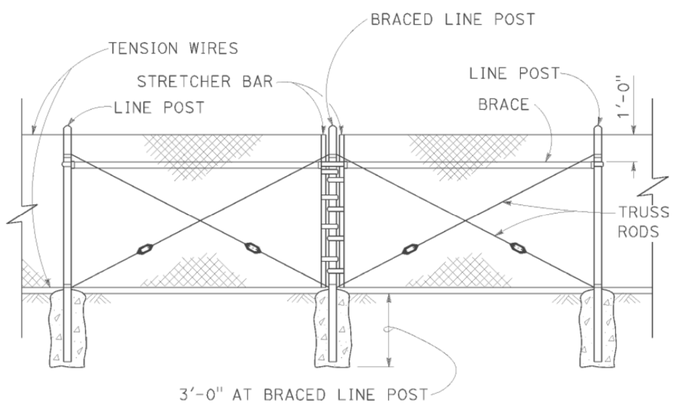

BRACED LINE POST INSTALLATION

Braced line post at intervals not exceeding 1000'

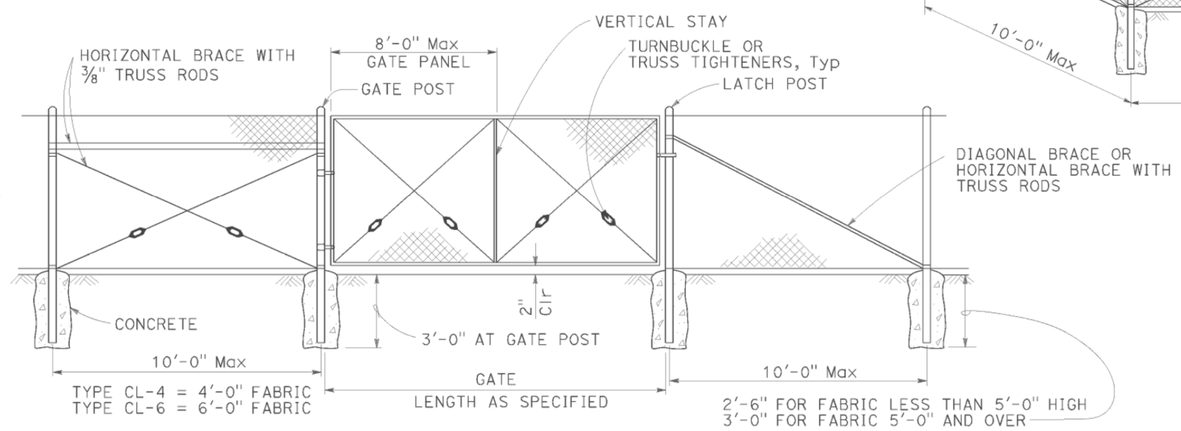

CHAIN LINK GATE INSTALLATION

GATE POST			
FENCE HEIGHT	GATE WIDTHS	ROUND OD PIPE	WEIGHT (lb/ft)
6'-0" AND LESS	UP THRU 6'-0"	2.875"	5.80
	OVER 6'-0" THRU 12'-0"	4.500"	10.80
	OVER 12'-0" THRU 18'-0"	5.563"	14.63
	OVER 18'-0" TO 24'-0" Max	6.625"	18.99
OVER 6'-0" TO 8'-0" Max	UP THRU 6'-0"	3.500"	7.58
	OVER 6'-0" THRU 12'-0"	5.563"	14.63
	OVER 12'-0" THRU 18'-0"	6.625"	18.99
	OVER 18'-0" TO 24'-0" Max	8.625"	28.58

Above post dimensions and weights are minimums. Larger sizes may be used upon approval.

NOTES:

1. The table below shows minimum sized posts and braces complying with the specifications. Larger or heavier post and brace sizes may be used upon approval.
2. Sections shown in the tables must also comply with the strength requirements and other provisions of the Specifications.
3. Other sections which comply with the strength requirements and other provisions of the Specifications may be used upon approval.
4. Options exercised shall be uniform on any one project.
5. Offset to be 2'-0" at monument locations, measured at right angles to R/W lines. Taper to achieve offset to be at least 20'-0" long.
6. See Revised Standard Plan RSP A85B for Brace, Stretcher Bar, and Truss Tightener Details.

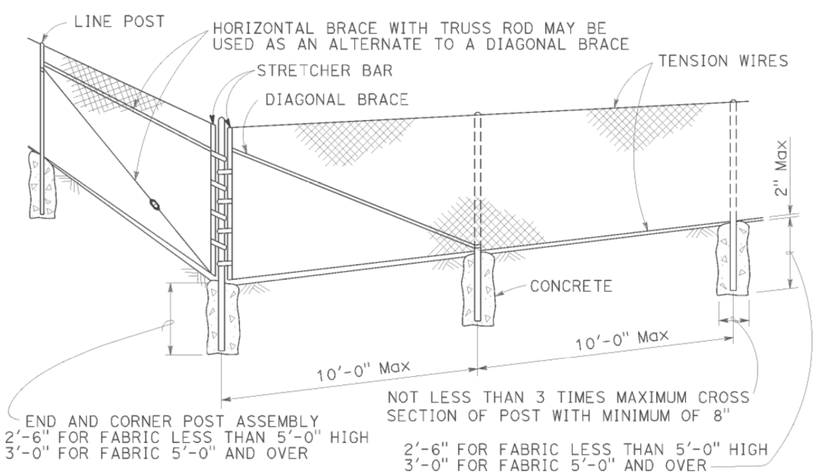

CORNER POST

TYPICAL MEMBER DIMENSIONS (See Notes)										
FENCE HEIGHT	LINE POSTS				END, LATCH AND CORNER POSTS		BRACES			
	ROUND OD PIPE	WEIGHT (lb/ft)	ROLL FORMED		ROUND OD PIPE	WEIGHT (lb/ft)	ROUND OD PIPE	WEIGHT (lb/ft)	ROLL FORMED	
			SECTION	WEIGHT (lb/ft)					SECTION	WEIGHT (lb/ft)
6'-0" AND LESS	1.900"	2.72	1.875" x 1.625"	1.85	2.375"	3.65	1.66"	2.27	1.625" x 1.25"	1.35
OVER 6'-0" TO 8'-0" Max	2.375"	3.65	2.25" x 1.70"	2.78	2.875"	5.80	1.66"	2.27	1.625" x 1.25"	1.35

STATE OF CALIFORNIA
DEPARTMENT OF TRANSPORTATION

CHAIN LINK FENCE

NO SCALE

RSP A85 DATED JULY 18, 2014 SUPERSEDES STANDARD PLAN A85
DATED MAY 20, 2011 - PAGE 112 OF THE STANDARD PLANS BOOK DATED 2010.

REVISED STANDARD PLAN RSP A85

2010 REVISED STANDARD PLAN RSP A85

DATE PLOTTED => 26-JUN-2015
TIME PLOTTED => 09:54

Dist	COUNTY	ROUTE	POST MILES TOTAL PROJECT	SHEET No.	TOTAL SHEETS
02	Sis	5	R10.7/R19.5	296	327

Glenn DeCou
REGISTERED CIVIL ENGINEER

October 19, 2012
PLANS APPROVAL DATE

REGISTERED PROFESSIONAL ENGINEER
Glenn DeCou
No. C34547
Exp. 9-30-13
CIVIL
STATE OF CALIFORNIA

THE STATE OF CALIFORNIA OR ITS OFFICERS OR AGENTS SHALL NOT BE RESPONSIBLE FOR THE ACCURACY OR COMPLETENESS OF SCANNED COPIES OF THIS PLAN SHEET.

TO ACCOMPANY PLANS DATED 06-23-15

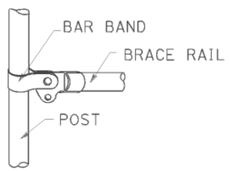

BRACE RAIL

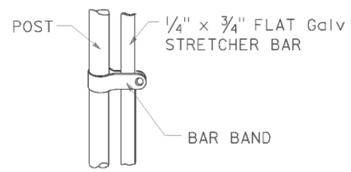

STRETCHER BAR

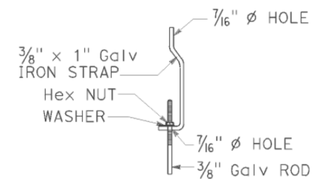

TRUSS TIGHTENER

NOTES:

1. All material for abutment connection to be galvanized.
2. The chain link fabric shall be replaced by barbed wire strands at 12" maximum centers between the double posts.
3. When the width of the culvert makes it necessary to anchor a post to the top of the culvert, a cast iron shoe or other device approved by the Engineer shall be used.
4. Fencing over stream and around headwall may also use Barbed Wire or Wire Mesh fencing with either wood post or steel post installation.
5. See Standard Plan A85 for Chain Link fence dimensions. See Standard Plan A86 for Barbed Wire and Wire Mesh fence dimensions and for wood post and steel post installation.

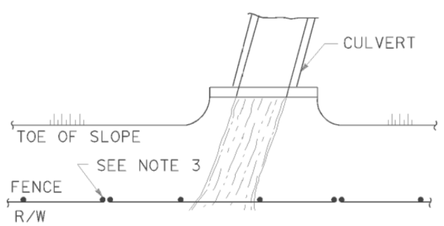

PLAN

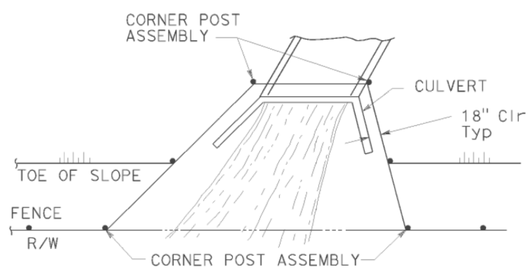

PLAN

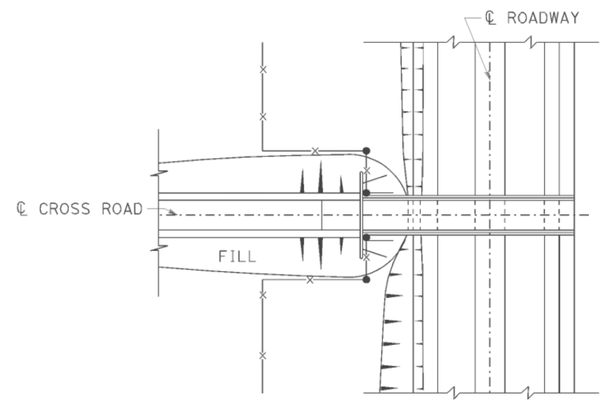

PLAN OF ROADWAY - OVERCROSSING

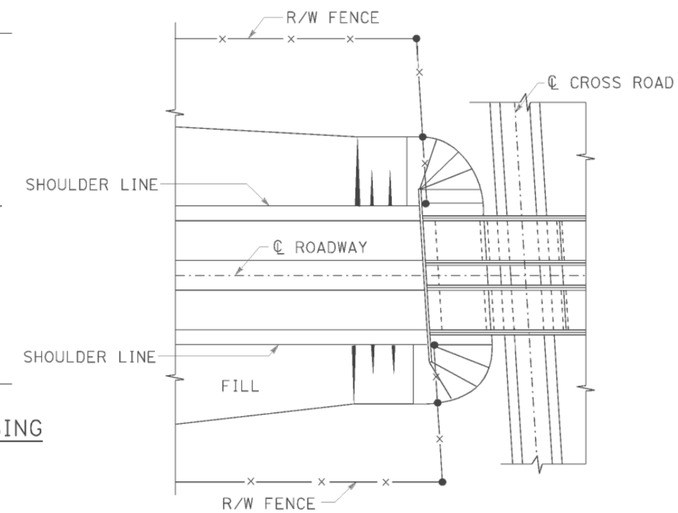

PLAN OF ROADWAY - UNDERCROSSING

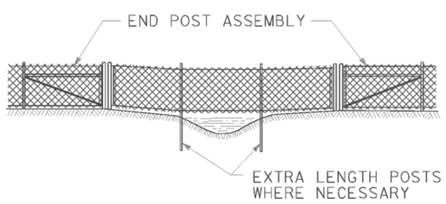

ELEVATION

INSTALLATION OVER STREAM

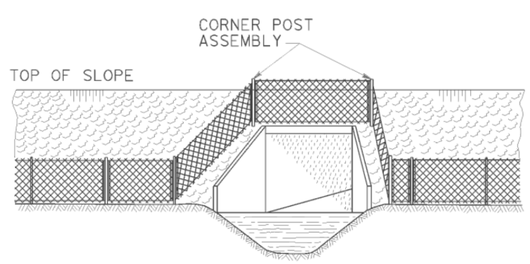

ELEVATION

INSTALLATION AROUND HEADWALL

See Note 4

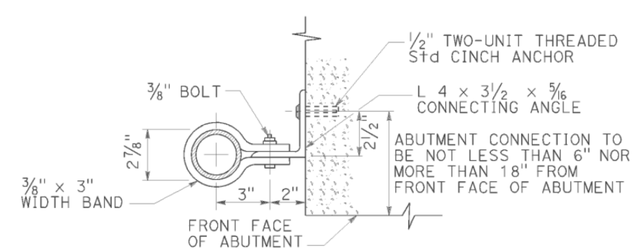

ABUTMENT CONNECTION

TYPICAL INSTALLATION AT BRIDGES

STATE OF CALIFORNIA
DEPARTMENT OF TRANSPORTATION

CHAIN LINK FENCE DETAILS

NO SCALE

RSP A85B DATED OCTOBER 19, 2012 SUPERSEDES STANDARD PLAN A85B DATED MAY 20, 2011 - PAGE 114 OF THE STANDARD PLANS BOOK DATED 2010.

REVISED STANDARD PLAN RSP A85B

2010 REVISED STANDARD PLAN RSP A85B

DATE PLOTTED => 26-JUN-2015
TIME PLOTTED => 09:54

Dist	COUNTY	ROUTE	POST MILES TOTAL PROJECT	SHEET No.	TOTAL SHEETS
02	Sis	5	R10.7/R19.5	297	327

REGISTERED CIVIL ENGINEER

July 19, 2013
PLANS APPROVAL DATE

REGISTERED PROFESSIONAL ENGINEER
Michael Janzen
No. 44788
Exp. 03-31-14
CIVIL
STATE OF CALIFORNIA

THE STATE OF CALIFORNIA OR ITS OFFICERS OR AGENTS SHALL NOT BE RESPONSIBLE FOR THE ACCURACY OR COMPLETENESS OF SCANNED COPIES OF THIS PLAN SHEET.

TO ACCOMPANY PLANS DATED 06-23-15

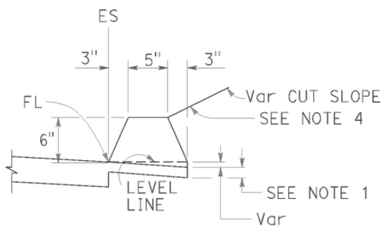

TYPE A
See Note 3

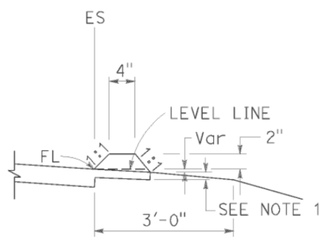

TYPE C

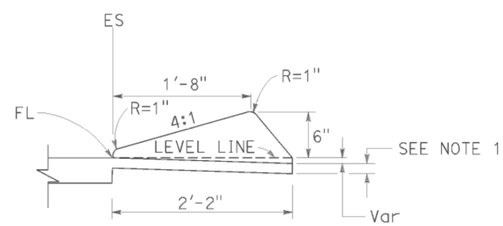

TYPE D

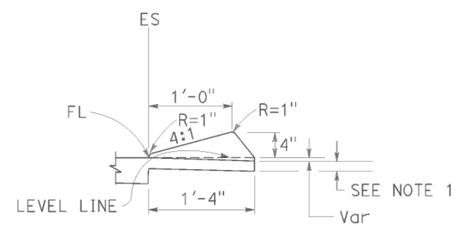

TYPE E

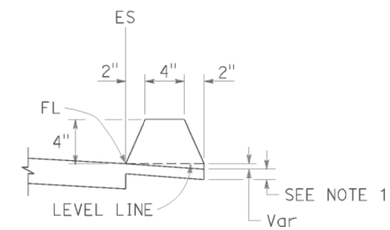

TYPE F
See Note 5

DIKES

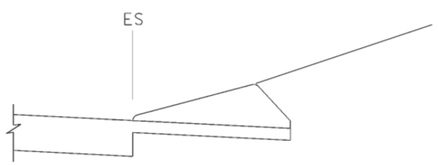

CASE C-1
Cut Slope

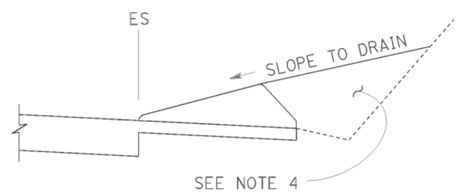

CASE C-2
Cut Slope

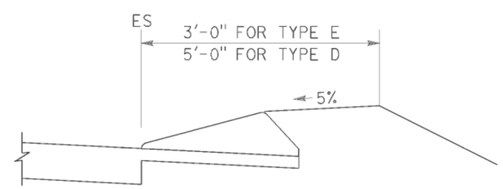

CASE F

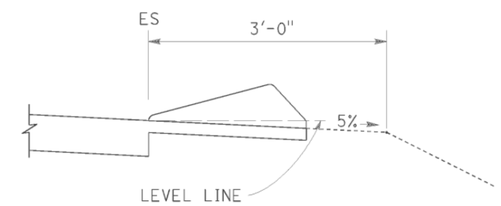

CASE R
See Note 2

TYPE D AND E BACKFILL DETAILS

NOTES:

1. For HMA shoulders only, extend top layer of HMA placed on the shoulder under dike with no joint at the ES. For projects with OGFC shoulders, do not extend OGFC under dike. See project plans for modified dike detail.
2. Case R applies to retrofit only projects where restrictive conditions do not provide enough width for Case F backfill.
3. Type A dike only to be used where restrictive slope conditions do not provide enough width to use Type D or Type E dike.
4. Fill and compact with excavated material to top of dike.
5. Use Type F dike, where dike is required with guard railing installations. See Revised Standard Plan RSP A77N4 for dike positioning details.

DIKE QUANTITIES

TYPE	CUBIC YARDS PER LINEAR FOOT
A	0.0135
C	0.0038
D	0.0293
E	0.0130
F	0.0066

Quantities based on 5% cross slope.

STATE OF CALIFORNIA
DEPARTMENT OF TRANSPORTATION

HOT MIX ASPHALT DIKES

NO SCALE

RSP A87B DATED JULY 19, 2013 SUPERSEDES STANDARD PLAN A87B
DATED MAY 20, 2011 - PAGE 120 OF THE STANDARD PLANS BOOK DATED 2010.

REVISED STANDARD PLAN RSP A87B

2010 REVISED STANDARD PLAN RSP A87B

DATE PLOTTED => 26-JUN-2015
TIME PLOTTED => 09:54

Dist	COUNTY	ROUTE	POST MILES TOTAL PROJECT	SHEET No.	TOTAL SHEETS
02	Sis	5	R10.7/R19.5	298	327

William K. Farnbach
REGISTERED CIVIL ENGINEER

July 19, 2013
PLANS APPROVAL DATE

REGISTERED PROFESSIONAL ENGINEER
William K. Farnbach
No. C49042
Exp. 9-30-14
CIVIL
STATE OF CALIFORNIA

THE STATE OF CALIFORNIA OR ITS OFFICERS OR AGENTS SHALL NOT BE RESPONSIBLE FOR THE ACCURACY OR COMPLETENESS OF SCANNED COPIES OF THIS PLAN SHEET.

TO ACCOMPANY PLANS DATED 06-23-15

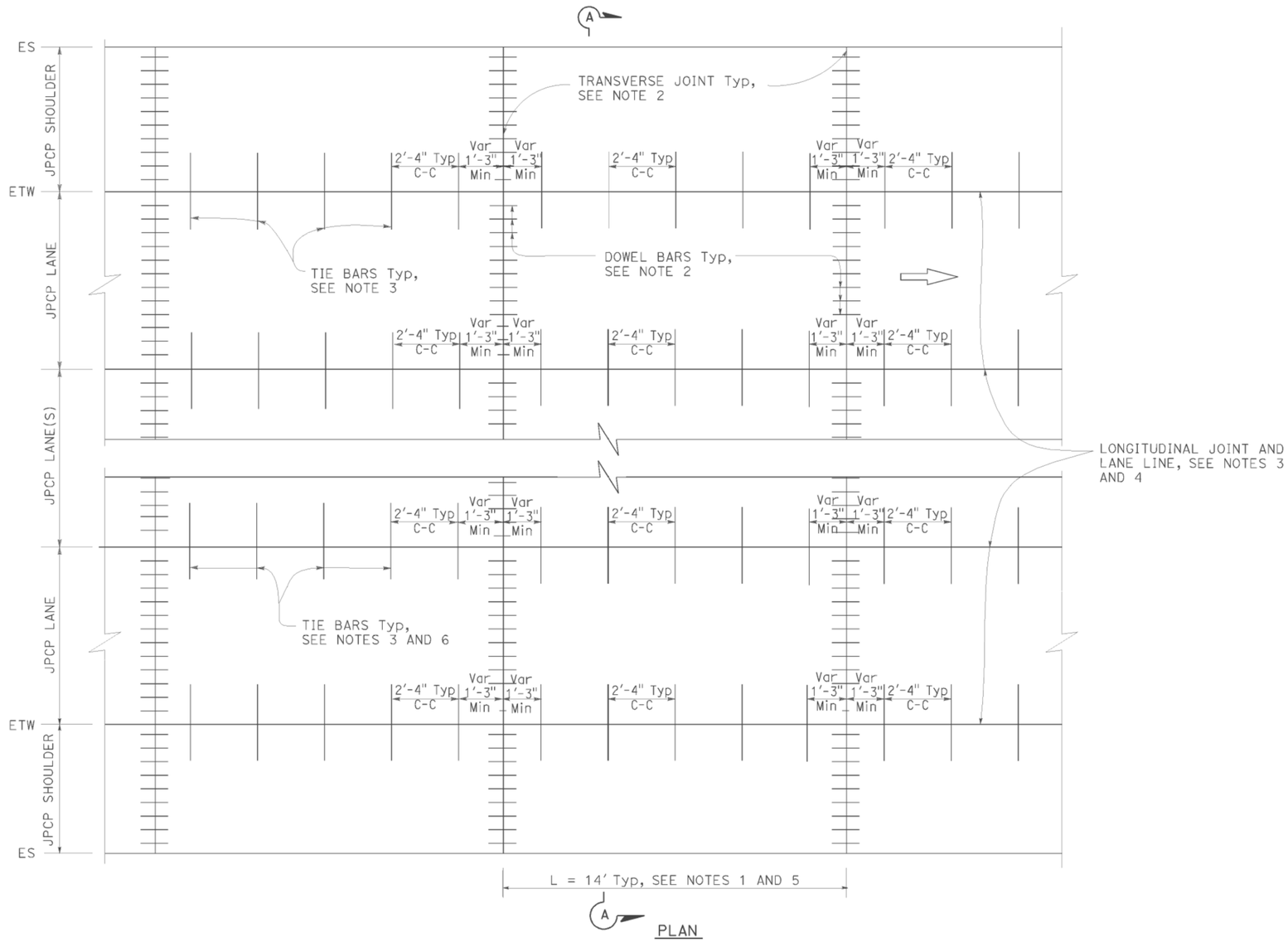

PLAN

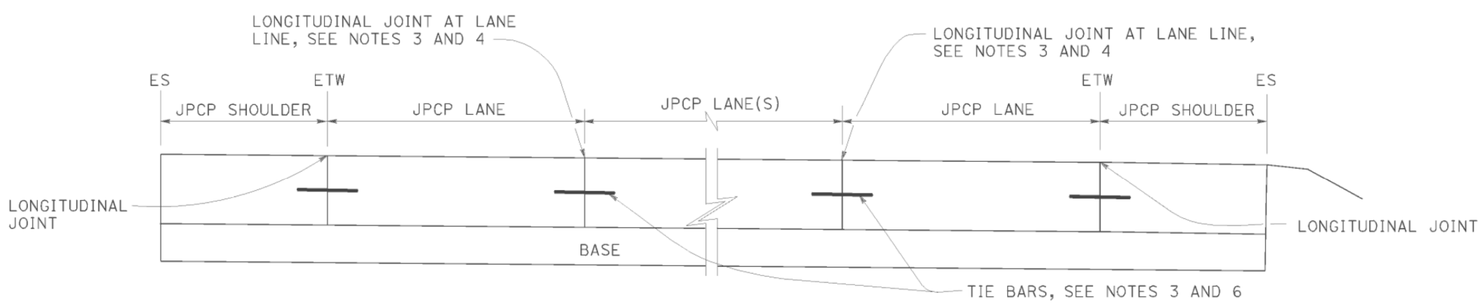

SECTION A-A

NOTES:

1. Transverse joint spacing may be adjusted to no less than 10' and no more than 14' to conform to bridges, change in pavement type, and hardened concrete pavement.
2. For transverse joint and dowel bar details not shown, see Revised Standard Plan RSP P10.
3. For longitudinal joint and tie bar details not shown, see Revised Standard Plan RSP P15.
4. For additional longitudinal joint layout details, see Revised Standard Plan RSP P18.
5. For joint layout at intersections, see Project Plans.
6. For dowel bars at longitudinal joint. see Revised Standard Plan RSP P18.

STATE OF CALIFORNIA
DEPARTMENT OF TRANSPORTATION

JOINTED PLAIN CONCRETE PAVEMENT NEW CONSTRUCTION

NO SCALE

RSP P1 DATED JULY 19, 2013 SUPERSEDES STANDARD PLAN P1 DATED MAY 20, 2011 - PAGE 125 OF THE STANDARD PLANS BOOK DATED 2010.

REVISED STANDARD PLAN RSP P1

2010 REVISED STANDARD PLAN RSP P1

DATE PLOTTED => 26-JUN-2015
TIME PLOTTED => 09:54

Dist	COUNTY	ROUTE	POST MILES TOTAL PROJECT	SHEET No.	TOTAL SHEETS
02	Sis	5	R10.7/R19.5	299	327

William K. Farnbach
REGISTERED CIVIL ENGINEER

July 19, 2013
PLANS APPROVAL DATE

REGISTERED PROFESSIONAL ENGINEER — William K. Farnbach — No. C49042 — Exp. 9-30-14 — CIVIL — STATE OF CALIFORNIA

THE STATE OF CALIFORNIA OR ITS OFFICERS OR AGENTS SHALL NOT BE RESPONSIBLE FOR THE ACCURACY OR COMPLETENESS OF SCANNED COPIES OF THIS PLAN SHEET.

TO ACCOMPANY PLANS DATED 06-23-15

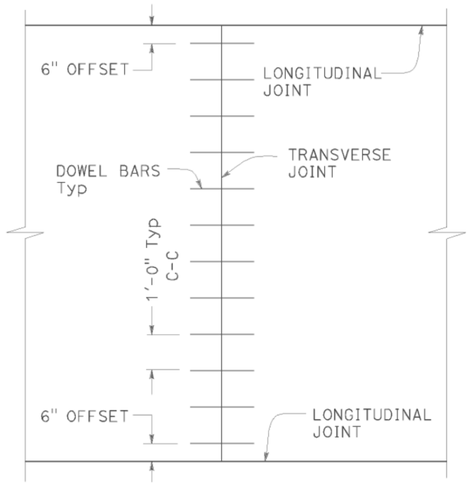

TRANSVERSE JOINT DOWEL BAR LAYOUT

PLAN

HORIZONTAL OFFSET TOLERANCE

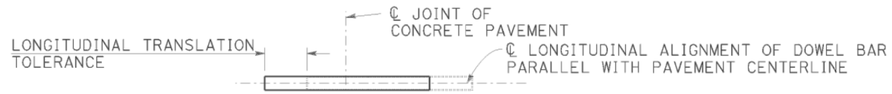

PLAN

LONGITUDINAL TRANSLATION TOLERANCE

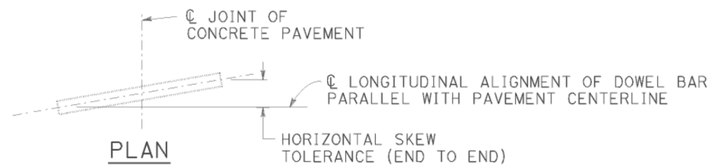

PLAN

HORIZONTAL SKEW TOLERANCE

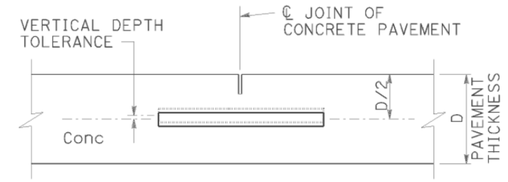

ELEVATION

VERTICAL DEPTH TOLERANCE

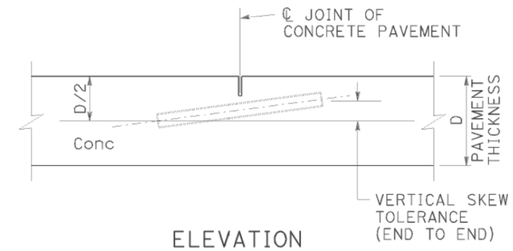

ELEVATION

VERTICAL SKEW TOLERANCE

NOTES:

1. See Revised Standard Plan RSP P1 for typical dowel bar placement and locations.
2. Where fresh concrete pavement is placed against new concrete or existing concrete pavement, rounding the corner of the existing concrete pavement is not required.
3. May also use ¾" Dia dowel bars 2'-4" ± ¼" in length. Center the length of dowel bars at the centerline of longitudinal joint.

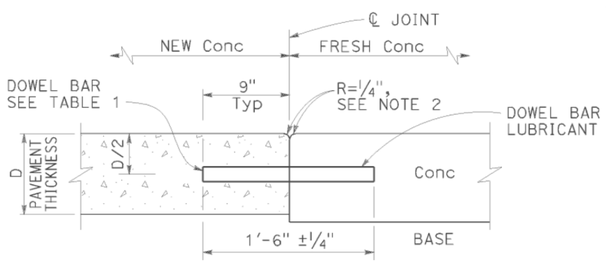

TRANSVERSE CONSTRUCTION JOINT DETAIL

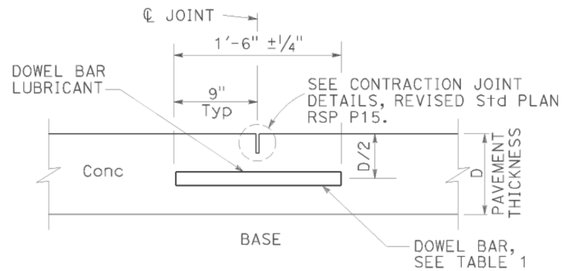

TRANSVERSE CONTRACTION JOINT

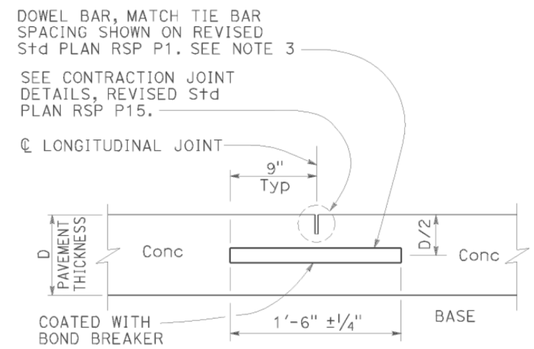

LONGITUDINAL CONTRACTION JOINT WITH DOWEL BARS

See Revised Std Plan RSP P18

TABLE 1

DOWEL BAR DIAMETER TABLE			
PAVEMENT THICKNESS	0.65'	> 0.65' - 0.85'	> 0.85'
MINIMUM DOWEL * BAR DIAMETER	1"	1¼"	1½"

* The drilled hole diameter must be ⅛" to 3/16" larger than the bar diameter.

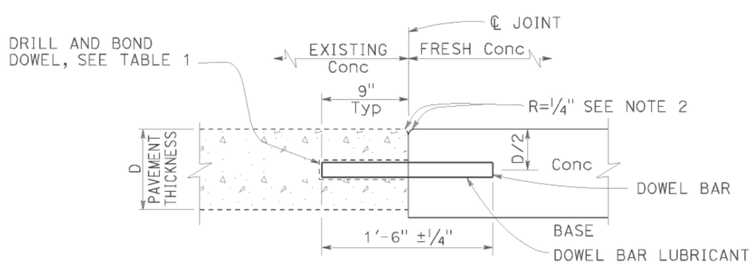

TRANSVERSE CONSTRUCTION JOINT FOR EXISTING CONCRETE PAVEMENT

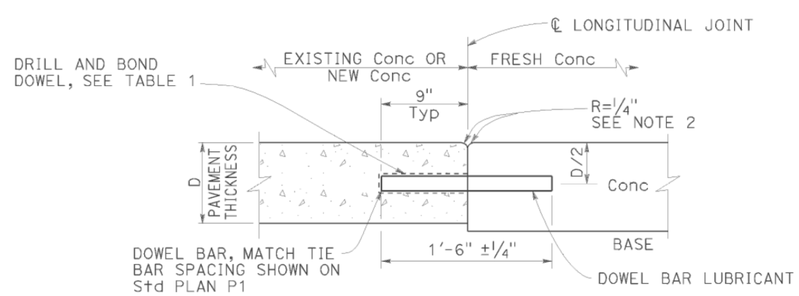

LONGITUDINAL CONSTRUCTION JOINT WITH DOWEL BARS

See Revised Std Plan RSP P18

STATE OF CALIFORNIA
DEPARTMENT OF TRANSPORTATION

CONCRETE PAVEMENT DOWEL BAR DETAILS

NO SCALE

RSP P10 DATED JULY 19, 2013 SUPERSEDES RSP P10 DATED APRIL 20, 2012 AND STANDARD PLAN P10 DATED MAY 20, 2011 - PAGE 131 OF THE STANDARD PLANS BOOK DATED 2010.

REVISED STANDARD PLAN RSP P10

2010 REVISED STANDARD PLAN RSP P10

DATE PLOTTED => 26-JUN-2015
TIME PLOTTED => 09:55

Dist	COUNTY	ROUTE	POST MILES TOTAL PROJECT	SHEET No.	TOTAL SHEETS
02	Sis	5	R10.7/R19.5	300	327

William K. Farnbach
REGISTERED CIVIL ENGINEER

July 19, 2013
PLANS APPROVAL DATE

REGISTERED PROFESSIONAL ENGINEER — William K. Farnbach — No. C49042 — Exp. 9-30-14 — CIVIL — STATE OF CALIFORNIA

THE STATE OF CALIFORNIA OR ITS OFFICERS OR AGENTS SHALL NOT BE RESPONSIBLE FOR THE ACCURACY OR COMPLETENESS OF SCANNED COPIES OF THIS PLAN SHEET.

TO ACCOMPANY PLANS DATED 06-23-15

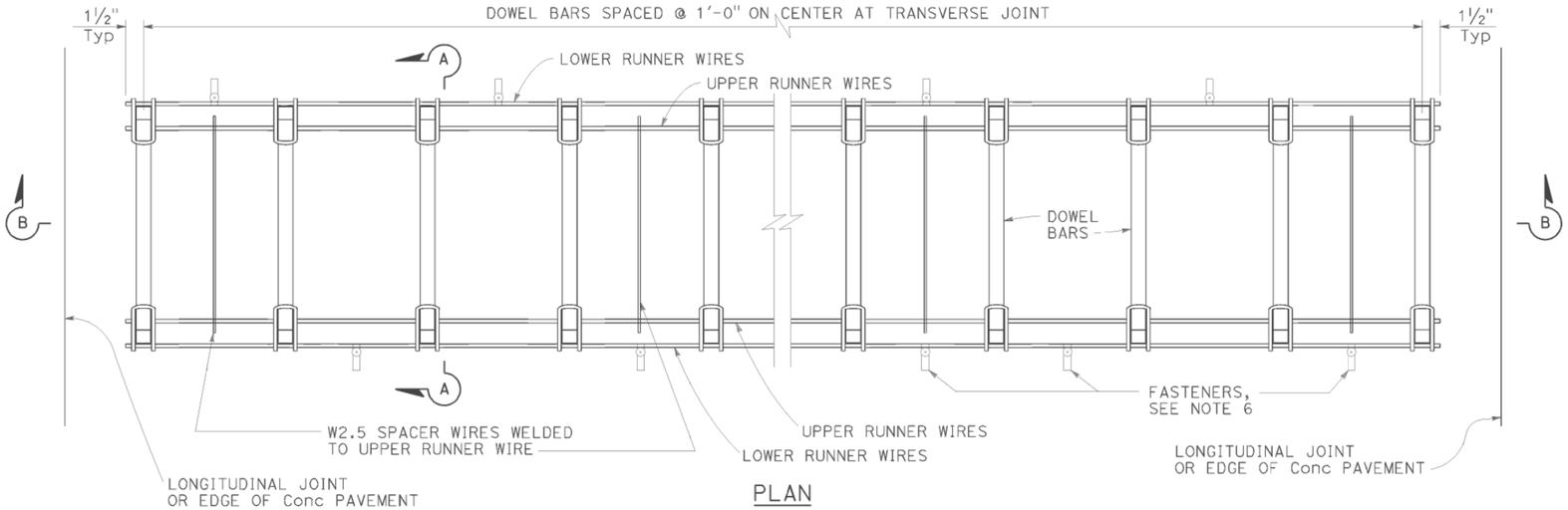

PLAN

DOWEL BAR BASKET (TRANSVERSE JOINT)

See Note 1

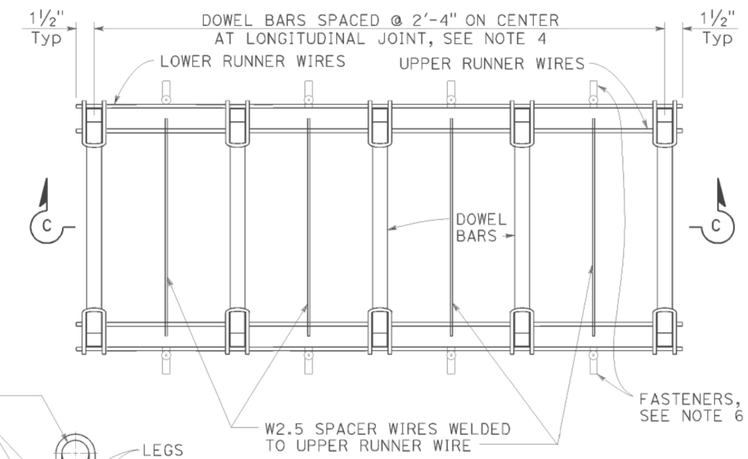

PLAN

DOWEL BAR BASKET (LONGITUDINAL JOINT)

See Note 1

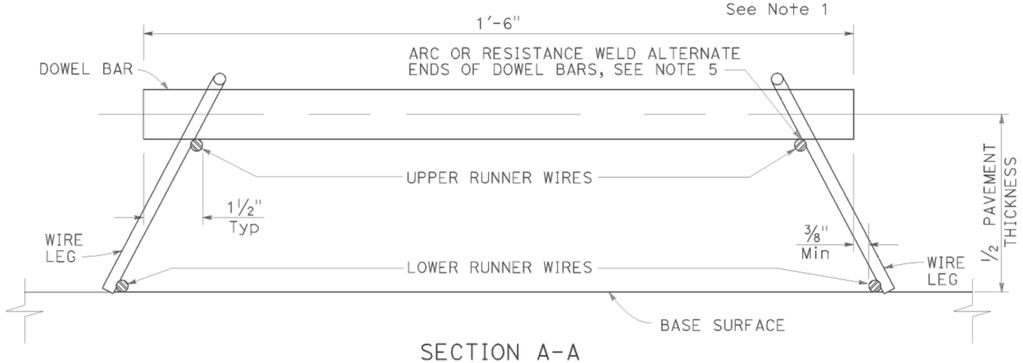

SECTION A-A

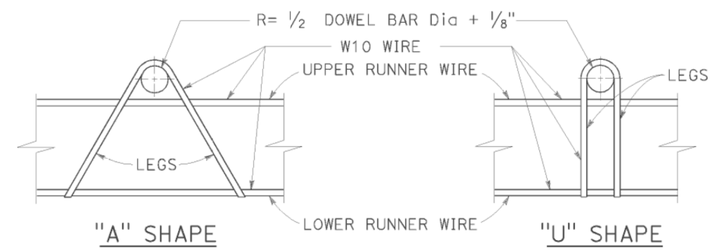

ASSEMBLY FRAME DETAILS

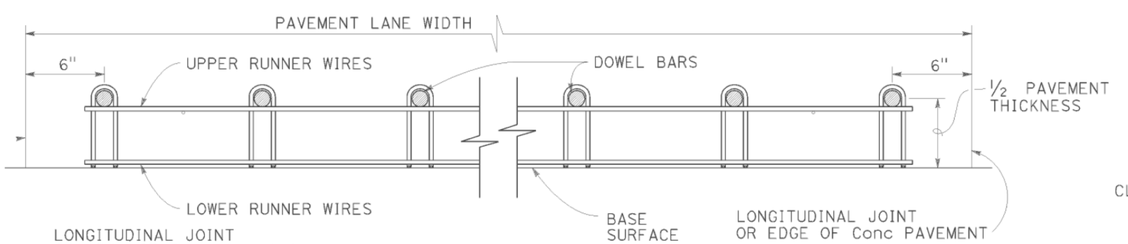

SECTION B-B

See Note 1

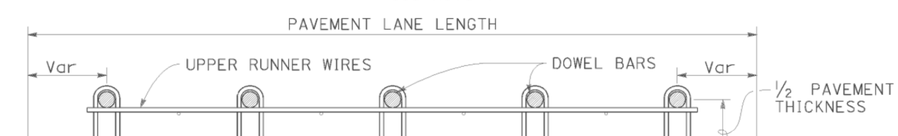

SECTION C-C

See Notes 1 and 4

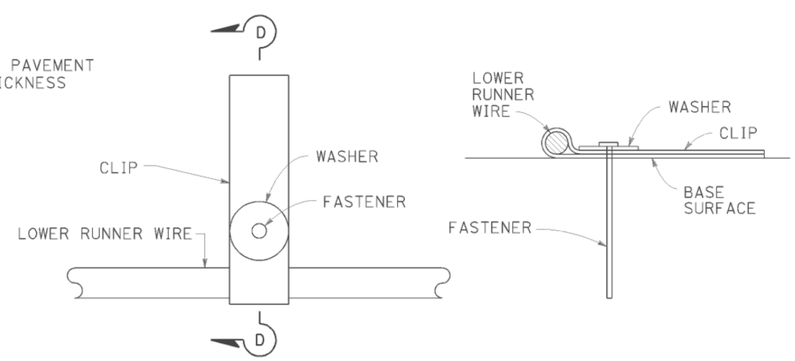

PLAN

SECTION D-D

FASTENER DETAIL

See Note 6

NOTES:

1. "U" frame shape assembly shown. Use either "U" frame shape or "A" frame shape.
2. Wire sizes shown are the minimum required.
3. All wire intersections must be resistance welded.
4. Use tie bar spacing for longitudinal dowel bar locations. See Revised Standard Plans RSP P1, RSP P2, RSP P3A, and RSP P3B for tie bar requirements.
5. Weld may be at the top or bottom of the dowel bar.
6. Use anchor pins where soil or granular base is used. See Revised Standard Plan RSP P17 for Anchor Pin Detail.

STATE OF CALIFORNIA
DEPARTMENT OF TRANSPORTATION

CONCRETE PAVEMENT DOWEL BAR BASKET DETAILS

NO SCALE

RSP P12 DATED JULY 19, 2013 SUPERSEDES STANDARD PLAN P12
DATED MAY 20, 2011 - PAGE 132 OF THE STANDARD PLANS BOOK DATED 2010.

REVISED STANDARD PLAN RSP P12

2010 REVISED STANDARD PLAN RSP P12

DATE PLOTTED => 26-JUN-2015
TIME PLOTTED => 09:55